POSTED 03/09/12

Command & Control Facility

Kandahar Air Field, Afghanistan
February 6, 2012

US Army Corps of Engineers
Middle East District

TETRA TECH

Solicitation
W912ER-10-X-XXXX
Design Complete Submittal

W:\23308\127-23308-11004\CAD\MED Drawings\AF1202\General\AF1202--CVR.dwg 3/7/2012 8:28:48 AM Jeffers, Scott

DRAWING INDEX – SITE

SHEET REF. NUMBER	FILE NUMBER	REVISIONS REV. NO.	REVISIONS AM/COP NO.	TITLE
				GENERAL DRAWINGS
G–001	AF1202––G001GN	FNL		DRAWING INDEX – SHEET 1 OF 3
G–002	AF1202––G002GN	FNL		DRAWING INDEX – SHEET 2 OF 3
G–003	AF1202––G003GN	FNL		DRAWING INDEX – SHEET 3 OF 3
				SITE CIVIL DRAWINGS
C–001	AF1202––C001GN	FNL		CIVIL GENERAL NOTES, LEGEND AND ABBREVIATIONS
C–002	AF1202––C002PN	FNL		LOCATION AND VICINITY PLAN
C–101	AF1202––C101PN	FNL		EXISTING CONDITIONS AND DEMOLITION PLAN
C–121	AF1202––C121PN	FNL		BORING PLAN
C–131	AF1202––C131PN	FNL		OVERALL SITE LAYOUT PLAN
C–132	AF1202––C132PN	FNL		SITE LAYOUT PLAN
C–141	AF1202––C141PN	FNL		UTILITY PLAN
C–501	AF1202––C501DT	FNL		SITE DETAILS
C–502	AF1202––C502DT	FNL		SITE UTILITY DETAILS
C–503	AF1202––C503DT	FNL		FIRE SUPPRESSION TANK DETAILS
C–504	AF1202––C504DT	FNL		FIRE SUPPRESSION TANK GENERAL DETAILS
C–505	AF1202––C505DT	FNL		FENCE AND GATE DETAILS
				SITE STRUCTURAL DRAWINGS
XS–501	AF1202––XS501DT	FNL		132,500 LITER WATER STORAGE FOUNDATION PLAN AND SECTION
XS–502	AF1202––XS502DT	FNL		FUEL STORAGE CONTAINMENT DETAILS
XS–503	AF1202––XS503DT	FNL		EQUIPMENT SUPPORT EXTERIOR CONCRETE PAD DETAIL
				SITE ELECTRICAL DRAWINGS
XE–101	AF1202––XE101PN	FNL		COMMAND AND CONTROL FACILITY SITE PLAN
				SITE TELECOM DRAWINGS
XT–101	AF1202––XT101PN	FNL		COMMAND AND CONTROL FACILITY SITE PLAN

DESIGN COMPLETE SUBMITTAL

SYMB	DESCRIPTION	DATE	APR
FNL	DESIGN COMPLETE SUBMITTAL	02–06–12	DMG

DESIGNED BY: PJB
DATE: 02–06–2012
DRAWN BY: PJB
SUBMITTED BY: TETRA TECH
CHECKED BY: DMG
FILE NO.: AF1202––G001GN

TETRA TECH

US Army Corps of Engineers
Middle East District

COMMAND & CONTROL FACILITY
KANDAHAR AIR FIELD, AFGHANISTAN

DRAWING INDEX
SHEET 1 OF 3

SHEET REFERENCE NUMBER:
G–001

W:\23308\127–23308–11004\CAD\MED Drawings\AF1202\General\AF1202––G001GN.dwg 3/7/2012 8:29:16 AM Jeffers, Scott

DRAWING INDEX – FACILITY A

SHEET REF. NUMBER	FILE NUMBER	REVISIONS REV. NO.	REVISIONS AM/COP NO.	TITLE
				STRUCTURAL DRAWINGS
S–101	AF1202A–S101PN	FNL		FOUNDATION/SLAB PLAN
S–102	AF1202A–S102PN	FNL		1ST FLOOR FRAMING PLAN
S–103	AF1202A–S103PN	FNL		ROOF FRAMING PLAN
S–401	AF1202A–S401LS	FNL		BUILDING SECTION AND DETAILS
				ARCHITECTURAL DRAWINGS
A–100	AF1202A–A100PN	FNL		GROUND FLOOR PLAN
A–101	AF1202A–A101PN	FNL		FIRST FLOOR PLAN
A–102	AF1202A–A102PN	FNL		GROUND FLOOR REFLECTED CEILING PLAN
A–103	AF1202A–A103PN	FNL		FIRST FLOOR REFLECTED CEILING PLAN
A–104	AF1202A–A104PN	FNL		ROOF PLAN
A–200	AF1202A–A200EL	FNL		BUILDING ELEVATIONS
A–201	AF1202A–A201EL	FNL		BUILDING ELEVATIONS
A–300	AF1202A–A300SE	FNL		BUILDING SECTIONS
A–301	AF1202A–A301SE	FNL		WALL SECTIONS
A–400	AF1202A–A400LS	FNL		ENLARGED TOILET ROOM PLANS AND CASEWORK ELEVATIONS
A–401	AF1202A–A401LS	FNL		ENLARGED STAIR PLANS AND SECTIONS
A–402	AF1202A–A402LS	FNL		ENLARGED PLAN
A–403	AF1202A–A403LS	FNL		FLOOR BOX LAYOUT PLANS
A–600	AF1202A–A600SC	FNL		DOOR SCHEDULE
A–640	AF1202A–A640SC	FNL		INTERIOR FINISH SCHEDULE
A–641	AF1202A–A641SC	FNL		INTERIOR SIGNAGE SCHEDULE
				FIRE PROTECTION DRAWINGS
F–100	AF1202A–F100PN	FNL		FIRE ALARM PLAN GROUND FLOOR
F–101	AF1202A–F101PN	FNL		FIRE ALARM PLAN FIRST FLOOR
F–105	AF1202A–F105PN	FNL		LIFE SAFETY PLAN GROUND FLOOR
F–106	AF1202A–F106PN	FNL		LIFE SAFETY PLAN FIRST FLOOR
F–110	AF1202A–F110PN	FNL		FIRE SUPPRESSION PLAN GROUND FLOOR
F–111	AF1202A–F111PN	FNL		FIRE SUPPRESSION PLAN FIRST FLOOR
F–400	AF1202A–F400LS	FNL		FIRE SUPPRESSION PLAN – FIRE PUMP ROOM
F–405	AF1202A–F405LS	FNL		FM 200 DETAIL PLAN ROOMS 129 AND 209
F–500	AF1202A–F500DT	FNL		FIRE PROTECTION DETAILS
				PLUMBING DRAWINGS
P–100	AF1202A–P100PN	FNL		FOUNDATION PLAN – AREA A
P–101	AF1202A–P101PN	FNL		GROUND FLOOR PLAN – AREA A
P–102	AF1202A–P102PN	FNL		FIRST FLOOR SANITARY PLAN – AREA A
P–103	AF1202A–P103PN	FNL		FIRST FLOOR PLAN – AREA A
P–400	AF1202A–P400LS	FNL		GROUND FLOOR ENLARGED WATER PLAN
P–401	AF1202A–P401LS	FNL		GROUND FLOOR ENLARGED SANITARY AND VENT PLAN
P–402	AF1202A–P402LS	FNL		FIRST FLOOR ENLARGED WATER PLAN
P–403	AF1202A–P403LS	FNL		FIRST FLOOR ENLARGED SANITARY AND VENT PLAN
P–500	AF1202A–P500DT	FNL		PLUMBING DETAILS
P–600	AF1202A–P600DI	FNL		PLUMBING WATER RISER DIAGRAM
P–601	AF1202A–P601SC	FNL		PLUMBING SCHEDULES
P–900	AF1202A–P900IS	FNL		SANITARY AND VENT ISOMETRICS

SHEET REF. NUMBER	FILE NUMBER	REVISIONS REV. NO.	REVISIONS AM/COP NO.	TITLE
				MECHANICAL DRAWINGS
M–100	AF1202A–M100PN	FNL		GROUND FLOOR MECHANICAL SECURE AREA PLAN
M–101	AF1202A–M101PN	FNL		FIRST FLOOR MECHANICAL SECURE AREA PLAN
M–110	AF1202A–M110PN	FNL		GROUND FLOOR MECHANICAL PLAN
M–111	AF1202A–M111PN	FNL		FIRST FLOOR MECHANICAL PLAN
M–112	AF1202A–M112PN	FNL		KEY NOTES
M–200	AF1202A–M200EL	FNL		MECHANICAL PLAN – ELEVATIONS
M–201	AF1202A–M201EL	FNL		MECHANICAL PLAN – ELEVATIONS
M–300	AF1202A–M300SE	FNL		MECHANICAL PLAN – SECTIONS
M–600	AF1202A–M600SC	FNL		MECHANICAL SCHEDULES
M–601	AF1202A–M601SC	FNL		MECHANICAL SCHEDULES
M–602	AF1202A–M602SC	FNL		MECHANICAL SCHEDULES
				ELECTRICAL DRAWINGS
E–110	AF1202A–E110PN	FNL		KEY PLAN
E–111	AF1202A–E111PN	FNL		GROUND FLOOR LIGHTING PLAN
E–112	AF1202A–E112PN	FNL		FIRST FLOOR LIGHTING PLAN
E–113	AF1202A–E113PN	FNL		GROUND FLOOR POWER PLAN
E–114	AF1202A–E114PN	FNL		FIRST FLOOR POWER PLAN
E–120	AF1202A–E120PN	FNL		ROOF LIGHTNING PROTECTION PLAN
E–130	AF1202A–E130PN	FNL		GROUNDING PLAN
E–601	AF1202A–E601SC	FNL		MOTOR CONNECTION SCHEDULE
E–602	AF1202A–E602SC	FNL		EQUIPMENT CONNECTION SCHEDULE
E–603	AF1202A–E603SC	FNL		CIPHER CONNECTION SCHEDULE
E–611	AF1202A–E611SC	FNL		PANEL SCHEDULE – PP1
E–612	AF1202A–E612SC	FNL		PANEL SCHEDULE – PP2
E–613	AF1202A–E613SC	FNL		PANEL SCHEDULE – PP3
E–621	AF1202A–E621SC	FNL		PANEL SCHEDULES – CP1 AND CP2
E–631	AF1202A–E631SC	FNL		PANEL SCHEDULE – HP1
E–641	AF1202A–E641SC	FNL		PANEL SCHEDULES – LP1 AND LP2
E–700	AF1202A–E700DI	FNL		ONE–LINE DIAGRAM
				TELECOMMUNICATIONS DRAWINGS
T–110	AF1202A–T110PN	FNL		KEY PLAN
T–111	AF1202A–T111PN	FNL		GROUND FLOOR TELECOM PLAN
T–112	AF1202A–T112PN	FNL		FIRST FLOOR TELECOM PLAN
T–201	AF1202A–T201EL	FNL		TELECOM RACK ELEVATIONS
T–401	AF1202A–T401LS	FNL		TELECOM ENLARGED PLANS

DESIGN COMPLETE SUBMITTAL

SYMB	DESCRIPTION	DATE	APR
FNL	DESIGN COMPLETE SUBMITTAL	02–06–12	DMG

DESIGNED BY: PJB
DATE: 02–06–2012
DRAWN BY: PJB
SUBMITTED BY: TETRA TECH
CHECKED BY: DMG
FILE NO.: AF1202––G002GN

TETRA TECH

US Army Corps of Engineers
Middle East District

COMMAND & CONTROL FACILITY
KANDAHAR AIR FIELD, AFGHANISTAN

DRAWING INDEX
SHEET 2 OF 3

SHEET REFERENCE NUMBER:
G–002

W:\23308\127–23308–11004\CAD\MED Drawings\AF1202\General\AF1202––G002GN.dwg 3/7/2012 8:29:45 AM Jeffers, Scott

DRAWING INDEX – STANDARD DRAWINGS

SHEET REF. NUMBER	FILE NUMBER	REVISIONS REV. NO.	REVISIONS AM/COP NO.	TITLE
				STRUCTURAL DRAWINGS
SS–001	AF1202$–SS001GN	FNL		STRUCTURAL GENERAL NOTES SHEET 1 OF 2
SS–002	AF1202$–SS002GN	FNL		STRUCTURAL GENERAL NOTES SHEET 2 OF 2
SS–501	AF1202$–SS501DT	FNL		FOUNDATION SECTIONS AND DETAILS
SS–502	AF1202$–SS502DT	FNL		CONCRETE SLAB DETAILS
SS–503	AF1202$–SS503DT	FNL		BEAM AND COLUMN DETAILS SHEET 1 OF 2
SS–504	AF1202$–SS504DT	FNL		BEAM AND COLUMN DETAILS SHEET 2 OF 2
SS–505	AF1202$–SS505DT	FNL		CMU WALL SECTIONS AND DETAILS SHEET 1 OF 2
SS–506	AF1202$–SS506DT	FNL		CMU WALL SECTIONS AND DETAILS SHEET 2 OF 2
SS–507	AF1202$–SS507DT	FNL		CMU AND SHEAR WALL SECTIONS AND DETAILS
SS–508	AF1202$–SS508DT	FNL		CONCRETE SHEAR WALL ELEVATION DETAIL AND SECTIONS
SS–601	AF1202$–SS601SC	FNL		SCHEDULES AND DETAILS SHEET 1 OF 4
SS–602	AF1202$–SS602SC	FNL		SCHEDULES AND DETAILS SHEET 2 OF 4
SS–603	AF1202$–SS603SC	FNL		SCHEDULES AND DETAILS SHEET 3 OF 4
SS–604	AF1202$–SS604SC	FNL		SCHEDULES AND DETAILS SHEET 4 OF 4
				ARCHITECTURAL DRAWINGS
SA–001	AF1202$–SA001GN	FNL		SYMBOLS AND ABBREVIATIONS
SA–500	AF1202$–SA500DT	FNL		MISCELLANEOUS DETAILS
SA–501	AF1202$–SA501DT	FNL		ROOF DETAILS
SA–502	AF1202$–SA502DT	FNL		MISCELLANEOUS DETAILS
SA–503	AF1202$–SA503DT	FNL		MISCELLANEOUS DETAILS
SA–504	AF1202$–SA504DT	FNL		MISCELLANEOUS DETAILS
SA–505	AF1202$–SA505DT	FNL		PLAN DETAILS
SA–506	AF1202$–SA506DT	FNL		MISCELLANEOUS DETAILS
SA–510	AF1202$–SA510DT	FNL		SIGNAGE DETAILS
				FIRE PROTECTION DRAWINGS
SF–001	AF1202$–SF001GN	FNL		GENERAL FIRE ALARM NOTES AND SYMBOLS
SF–002	AF1202$–SF002GN	FNL		GENERAL FIRE SUPPRESSION NOTES AND SYMBOLS
SF–500	AF1202$–SF500DT	FNL		FIRE ALARM DETAILS
SF–510	AF1202$–SF510DT	FNL		FIRE SUPPRESSION DETAILS
SF–511	AF1202$–SF511DT	FNL		FIRE SUPPRESSION DETAILS
				PLUMBING DRAWINGS
SP–001	AF1202$–SP001GN	FNL		GENERAL NOTES, ABBREVIATIONS AND LEGEND
SP–500	AF1202$–SP500DT	FNL		PLUMBING DETAILS
SP–501	AF1202$–SP501DT	FNL		FUEL TANK DETAIL
				MECHANICAL DRAWINGS
SM–001	AF1202$–SM001GN	FNL		MECHANICAL GENERAL NOTES, SYMBOLS AND ABBREVIATIONS
SM–500	AF1202$–SM500DT	FNL		MECHANICAL DETAILS
SM–501	AF1202$–SM501DT	FNL		MECHANICAL DETAILS
SM–502	AF1202$–SM502DT	FNL		MECHANICAL DETAILS
SM–503	AF1202$–SM503DT	FNL		MECHANICAL DETAILS
SM–504	AF1202$–SM504DT	FNL		MECHANICAL DETAILS

SHEET REF. NUMBER	FILE NUMBER	REVISIONS REV. NO.	REVISIONS AM/COP NO.	TITLE
				ELECTRICAL DRAWINGS
SE–001	AF1202$–SE001GN	FNL		GENERAL NOTES, SYMBOLS AND ABBREVIATIONS
SE–002	AF1202$–SE002GN	FNL		ELECTRICAL SITE OVERALL PLAN
SE–500	AF1202$–SE500DT	FNL		GENERAL DETAILS
SE–501	AF1202$–SE501DT	FNL		GENERAL DETAILS
SE–502	AF1202$–SE502DT	FNL		GENERAL DETAILS
SE–503	AF1202$–SE503DT	FNL		GENERAL DETAILS
SE–504	AF1202$–SE504DT	FNL		GENERAL DETAILS
SE–505	AF1202$–SE505DT	FNL		GENERAL DETAILS
SE–520	AF1202$–SE520DT	FNL		LIGHTNING PROTECTION DETAILS
SE–600	AF1202$–SE600SC	FNL		LIGHT FIXTURE SCHEDULE
				TELECOMMUNICATIONS DRAWINGS
ST–001	AF1202$–ST001GN	FNL		GENERAL NOTES, SYMBOLS AND ABBREVIATIONS
ST–500	AF1202$–ST500DT	FNL		GENERAL DETAILS
ST–501	AF1202$–ST501DT	FNL		GENERAL DETAILS
ST–502	AF1202$–ST502DT	FNL		GENERAL DETAILS
ST–503	AF1202$–ST503DT	FNL		GENERAL DETAILS
ST–700	AF1202$–ST700DI	FNL		RISER DIAGRAMS

DESIGN COMPLETE SUBMITTAL

SYMB	DESCRIPTION	DATE	APR
FNL	DESIGN COMPLETE SUBMITTAL	02–06–12	DMG

DESIGNED BY: PJB
DATE: 02–06–2012
DRAWN BY: PJB
SUBMITTED BY: TETRA TECH
CHECKED BY: DMG
FILE NO.: AF1202––G003GN

TETRA TECH

US Army Corps of Engineers
Middle East District

COMMAND & CONTROL FACILITY
KANDAHAR AIR FIELD, AFGHANISTAN

DRAWING INDEX
SHEET 3 OF 3

SHEET REFERENCE NUMBER:
G–003

W:\23308\127–23308–11004\CAD\MED Drawings\AF1202\General\AF1202––G003GN.dwg 3/7/2012 8:29:58 AM Jeffers, Scott

GENERAL NOTES:

1. INFORMATION REGARDING APPROXIMATE SITE LIMITS, ADJACENT ROAD AND WALKWAYS AND LOCATIONS OF EXISTING IMPROVEMENTS PROVIDED BY USACE–MED ON APRIL 2011 VIA ELECTRONIC TRANSMISSION. THIS IS NOT INTENDED TO BE AS–BUILT INFORMATION AND IS TO BE VERIFIED BY THE CONTRACTOR.
2. CONTRACTOR SHALL PERFORM SITE SURVEY AND GEOTECHNICAL INVESTIGATION PRIOR TO STARTING CONSTRUCTION IN ACCORDANCE WITH SPECIFICATION SECTION 02 21 00 AND 02 33 00.
3. CONTRACTOR SHALL SUBMIT SITE GRADING AND DRAINAGE PLANS TO CONTRACTING OFFICER FOR APPROVAL FOLLOWING SITE SURVEY AND GEOTECHNICAL REPORT PRIOR TO COMMENCING CONSTRUCTION. THE DRAINAGE PLANS SHALL BE DESIGNED FOR THE 10 YEAR DESIGN STORM IN ACCORDANCE WITH UFC 3–230–17FA DRAINAGE IN AREAS OTHER THAN AIRFIELDS. REFER TO SPECIFICATION SECTION 31 00 00 FOR ADDITIONAL INFORMATION.
4. APPROXIMATE SITE LIMITS HAVE BEEN PROVIDED BY USACE–MED. ALL LAYOUT DIMENSIONS TO THE SITE LIMITS SHALL BE CONFIRMED BY THE CONTRACTOR BASED ON THE SITE SURVEY AND THROUGH COORDINATION WITH CONTRACTING OFFICER.
5. ALL BUILDING LAYOUT DIMENSIONS ARE TO THE OUTSIDE EDGE OF THE BUILDING WALL.
6. ALL CONCRETE PAD LAYOUT DIMENSIONS SHOWN ON THE SITE PLAN ARE REPRESENTATIVE OF SPECIFIC EQUIPMENT INSTALLATION SELECTED DURING THE DESIGN PROCESS. THE CONTRACTOR SHALL DETERMINE THE ACTUAL CONCRETE PAD DIMENSIONS BASED ON THE SELECTED AND APPROVED EQUIPMENT INSTALLATION.
7. ALL SUN SHADES AND MISC. ENCLOSURES SHALL BE DESIGNED AND CONSTRUCTED BY THE CONTRACTOR IN ACCORDANCE WITH SPECIFICATION 05 50 13. SUNSHADE FOUNDATION DESIGN SHALL BE PERFORMED BY THE MANUFACTURERS ENGINEER.
8. REFER TO CONCRETE SPECIFICATIONS 03 31 00.00 10 FOR CONCRETE STRENGTH REQUIREMENTS.
9. ALL SITE PLAN DIMENSIONS ARE IN METERS UNLESS NOTED OTHERWISE.
10. FINISH FLOOR ELEVATION IS BASED ON AN ASSUMED DATUM. FINISH FLOOR ELEVATION IS EQUAL TO TOP OF SLAB ELEVATION. REFER TO ARCHITECTURAL AND STRUCTURAL DRAWINGS FOR DETAIL OF FINISH FLOOR, TOP OF SLAB AND RAISED FLOOR DETAILS. SET FINISH FLOOR ELEVATION A MINIMUM OF 150mm ABOVE FINISH GRADE.
11. WALKWAYS SHALL BE INSTALLED BETWEEN BUILDINGS AND EXISTING WALKWAYS AS SHOWN ON PLAN.
12. ALL WORK TO BE PERFORMED OUTSIDE SITE LIMITS ASSOCIATED WITH SITE ENTRANCE TO BE COORDINATED WITH CONTRACTING OFFICER.
13. CONCRETE BARRIER WALLS SHOULD BE DESIGNED AS APPROPRIATE TO ALLOW FOR SHIPMENT AND HANDLING BY COMMONLY AVAILABLE MEANS. HOWEVER, TO PROVIDE NECESSARY WEAPON PROTECTION, IN NO CASE SHOULD THE CONCRETE BARRIERS BE LESS THAN 300mm THICK AND 2000mm HIGH. WITH REGARDS TO PLACEMENT, WALLS MUST BE CONNECTED TO ADJACENT SECTIONS TO MINIMIZE OVERTURNING.
14. FIRE DEPARTMENT ACCESS SHALL BE MAINTAINED AROUND BUILDINGS IN ACCORDANCE WITH ALL APPLICABLE LOCAL AND GOVERNMENT CODES. CONTRACTOR IS TO COORDINATE WITH CONTRACTING OFFICER.
15. CONTRACTOR SHALL ENSURE ALL STRUCTURES AND/OR EQUIPMENT LOCATED WITHIN THE ATFP SETBACKS MEET THE REQUIREMENTS OF UFC 04–010–01 AND UFC 04–010–02.
16. REFER TO ELECTRICAL DRAWINGS FOR GENERATOR AND OTHER SITE ELECTRICAL INFORMATION.
17. REFER TO PLUMBING DRAWINGS FOR DIESEL FUEL STORAGE TANK AND ASSOCIATED PIPING INFORMATION WITHIN APPROXIMATE SITE LIMITS.

GRADING AND DRAINAGE NOTES:

1. PRIOR TO CONSTRUCTION THE CONTRACTOR SHALL PERFORM A SITE SURVEY AND GEOTECHNICAL INVESTIGATION IN ACCORDANCE WITH SPECIFICATION SECTIONS 02 21 00 AND 02 33 00 RESPECTIVELY. INFORMATION OBTAINED FROM THE SITE SURVEY AND GEOTECHNICAL INVESTIGATION SHALL BE USED TO DEVELOP A SPECIFIC GRADING PLAN AND FOR VERIFICATION OF SUBSURFACE MATERIAL FOR STRUCTURE AND PAVEMENT DESIGN. IF THE GEOTECHNICAL INVESTIGATION IDENTIFIES SUBSURFACE CONDITIONS THAT DO NOT MEET THE ASSUMED DESIGN PARAMETERS, THE CONTRACTOR SHALL REDESIGN THE STRUCTURE AND PAVEMENT SECTIONS ACCORDINGLY. THE CONTRACTOR SHALL SUBMIT SITE GRADING AND DRAINAGE PLANS AND GEOTECHNICAL REPORT TO CONTRACTING OFFICER FOR APPROVAL PRIOR TO COMMENCING CONSTRUCTION. THE DRAINAGE PLANS SHALL BE DESIGNED FOR THE 10 YEAR DESIGN STORM IN ACCORDANCE WITH UFC 3–230–17FA DRAINAGE IN AREAS OTHER THAN AIRFIELDS. REFER TO SPECIFICATION SECTION 31 00 00 FOR ADDITIONAL INFORMATION.
2. FINISHED FLOOR ELEVATION IS PROVIDED FOR REFERENCE ONLY AND DOES NOT REPRESENT ACTUAL SITE ELEVATIONS. CONTRACTOR SHALL COORDINATE SITE ELEVATIONS WITH ELEVATIONS SHOWN IN THE BUILDING DRAWINGS. CONTRACTOR SHALL COORDINATE FINISHED FLOOR ELEVATION WITH CONTRACTING OFFICER PRIOR TO CONSTRUCTION.
3. PERIMETER DITCH AND CULVERTS ARE TO BE DESIGNED AND PROVIDED BY THE CONTRACTOR IN ACCORDANCE WITH SPECIFICATION SECTION 31 00 00. EXACT LIMITS, SIZE, AND SLOPES ARE TO BE COORDINATED WITH THE CONTRACTING OFFICER PRIOR TO CONSTRUCTION.
4. CONTRACTOR IS RESPONSIBLE FOR MAINTAINING EXISTING DRAINAGE PATTERNS OUTSIDE LOT LIMITS. CONTRACTOR SHALL DESIGN AND CONSTRUCT CULVERTS UNDER PROPOSED ACCESS DRIVES, UTILITY TURNOFFS, AND SIDEWALKS AS SHOWN ON SITE PLANS AND AS NECESSARY TO MAINTAIN SITE DRAINAGE.
5. 75mm OF 20mm CRUSHED GRAVEL SHALL BE PROVIDED ON ALL UNPAVED SURFACES WITHIN 25m OF BUILDING FOR DUST CONTROL. GRAVEL SHALL BE COMPACTED AND INSTALLED SO THAT DRAINAGE AWAY FROM BUILDING IS NOT DISRUPTED. CONTRACTOR SHALL PLACE WALKWAYS 25mm ABOVE GRAVEL BASE (NOT FLUSH) FOR EASE OF TRAVEL DURING RAIN EVENTS.

UTILITY NOTES:

1. INFORMATION REGARDING LOCATIONS OF EXISTING AND FUTURE BASE UTILITIES (WATER DISTRIBUTION AND SEWER SYSTEM) PROVIDED BY USACE–MED IN APRIL 2011 VIA ELECTRONIC TRANSMISSION. THE CONTRACTOR SHALL VERIFY THE CONNECTION LOCATIONS WITH CONTRACTING OFFICER PRIOR TO CONSTRUCTION.
2. CONTRACTOR TO PROVIDE A 150mm DIAMETER SEWER LATERAL SLOPED AT A MINIMUM OF 1.0% FROM THE BUILDING. REFER TO PLUMBING DRAWINGS FOR BUILDING CONNECTION POINT.
3. UNDERGROUND PRESSURE PIPING SHALL BE SCH–80 PVC UNLESS OTHERWISE NOTED.
4. ALL ABOVE GROUND PIPE SHALL BE SCH–80 CPVC UNLESS OTHERWISE NOTED AND PAINTED BLUE IN ACCORDANCE WITH SPECIFICATION 09 90 00. ALL ABOVE GROUND PIPING SHALL BE SOLVENT WELDED.
5. THRUST RESTRAINT FOR ALL PRESSURIZED PIPE SHALL BE PROVIDED BY MECHANICAL RESTRAINT OR THRUST BLOCKS. MECHANICAL RESTRAINTS, IF USED BY THE CONTRACTOR, SHALL BE INSTALLED FOR THE LENGTH BEYOND EACH BEND OR TEE AS REQUIRED BY THE RESTRAINT MANUFACTURER. THRUST BLOCK SIZING, IF USED BY THE CONTRACTOR, SHALL BE BASED ON THE SOIL BEARING CAPACITY AS PROVIDE IN THE GEOTECHNICAL REPORT. THE CONTRACTOR SHALL SUBMIT THE MECHANICAL RESTRAINT OR THRUST BLOCK SIZING CALCULATIONS TO THE CONTRACTING OFFICER PRIOR TO CONSTRUCTION.
6. FIRE WATER STORAGE TANKS VOLUMES LISTED ON THE APPROPRIATE DRAWINGS ARE MINIMUM USABLE VOLUMES WHICH MUST EXIST ABOVE THE OUTLET AND A MINIMUM OF 150mm BELOW THE OVERFLOW. CONTRACTOR MAY PROVIDE EITHER A CIRCULAR OR RECTANGULAR STEEL BOLTED TANK.
7. INSTALLATION OF WATER AND SEWER SERVICES TO THE BUILDINGS SHALL BE PERFORMED BY THE CONTRACTOR. THE CONTRACTOR SHALL COORDINATE THE TYPE, SIZE, AND MATERIAL FOR CONNECTION TO THE BUILDING SERVICE CONNECTION.
8. ELEVATION OF TANK PENETRATIONS AND TANK FILL AND OUTLET PIPES TO BE COORDINATED WITH TANK MANUFACTURER'S REQUIREMENTS.
9. FLEXIBLE COUPLINGS ARE REQUIRED BETWEEN THE TRANSITION OF UNDERGROUND AND ABOVE GROUND PIPING, AT THE CONNECTION TO THE BUILDING PIPING, OR AS SHOWN ON THE DRAWINGS. FLEXIBLE COUPLING SHALL BE NEOPRENE TUBE REINFORCED WITH MULTIPLE PLIES OF NYLON TIRE CORD WITH A NEOPRENE COVER. FLEXIBLE COUPLINGS 600mm ID OR LESS SHALL BE SINGLE SPHERE FURNISHED WITH A SET OF FLOATING GALVANIZED STEEL FLANGES WITH RECESSED GROOVE TO INTERLOCK WITH RUBBER CONNECTOR'S RAISED FACE FLANGE BEAD. FLANGE BEAD WILL BE WIRE REINFORCED. FLANGES SHALL BE DRILLED 10 BAR ISO. FLEXIBLE EXPANSION FITTINGS TO ACCOMMODATE APPROXIMATELY 38mm TO 50mm OF SETTLEMENT. FITTING TO BE RESISTANT TO UV EXPOSURE AND COMPLY WITH PIPE TESTING REQUIREMENTS AS STATED IN SPECIFICATIONS.
10. ALL PIPE SIZES ARE IN MILLIMETERS UNLESS NOTED OTHERWISE.
11. ALL VALVES ABOVE GRADE SHALL BE FLANGE MOUNTED DUCTILE IRON. VALVES SHALL BE MADE TAMPER PROOF BY PASSING A HEAVY DUTY CHAIN THROUGH HAND WHEEL AND AROUND VALVE BODY AS TO NOT ALLOW HAND WHEEL TO ROTATE MORE THAN ¾ TURN AND LOCKING ENDS TOGETHER WITH A WEATHER PROOF LOCK.
12. CONTRACTOR TO INSTALL PIPE SUPPORTS FOR ALL ABOVE–GRADE PIPING. REFER TO STRUCTURAL SHEETS FOR PIPE SUPPORT DETAILS AND MINIMUM SPACING REQUIREMENTS.

LEGEND

EXISTING	DESCRIPTION	PROPOSED
	10m ATFP STANDOFF	
	25m ATFP STANDOFF	
	SITE LIMITS	
	PROPOSED RIGHT–OF–WAY	
X	CHAIN LINK FENCE	X
	CONCRETE WALKWAY	
	GRAVEL PAVEMENT	
	BOLLARD	
	SWING GATE	
	CLEAN OUT	
	BUNKER WITH T–WALL (CONTRACTOR OPTION)	
	CONCRETE BARRIER WALL (ALASKA BARRIER)	
W	DOMESTIC WATER LINE (W/SIZE)	W 150
S	GRAVITY SEWER (W/SIZE)	S 200
	SEWER FORCE MAIN (W/SIZE)	SFM 200
FP	FIRE PROTECTION FORCE MAIN (W/SIZE)	FP 100
	GATE VALVE	
	FROST PROOF YARD HYDRANT	
	FIRE DEPARTMENT CONNECTION	
	SEWER MANHOLE	MH
	COMMUNICATION DUCT BANK (REFER TO COMMUNICATION SITE PLANS FOR MORE INFORMATION)	C
E	ELECTRICAL DUCT BANK (REFER TO ELECTRICAL SITE PLANS FOR MORE INFORMATION)	E
	COMMUNICATION MANHOLE, REFER TO COMMUNICATION SITE PLANS FOR MORE INFORMATION	C
	ELECTRIC MANHOLE, REFER TO ELECTRICAL SITE PLANS FOR MORE INFORMATION	E
	ELECTRIC GENERATOR	GEN
	FUEL TANK (SEE PLUMBING DRAWINGS)	FUEL
	MECHANICAL UNIT (SEE MECHANICAL DRAWINGS)	HVAC
	PAD MOUNTED TRANSFORMER (SEE ELECTRICAL DRAWINGS)	T
	PAD MOUNTED ENCLOSED CIRCUIT BREAKER (SEE ELECTRICAL DRAWINGS)	CB
	PAD MOUNTED AUTOMATIC TRANSFER SWITCH (SEE ELECTRICAL DRAWINGS)	ATS

ABBREVIATIONS

ATFP	ANTI–TERRORISM FORCE PROTECTION
ATS	AUTOMATIC TRANSFER SWITCH
BLDG	BUILDING
CO	CLEANOUT AT GRADE
CONC	CONCRETE
CPVC	CHLORINATED POLYVINYL CHLORIDE
DI	DUCTILE IRON
ELEV	ELEVATION
EW	EACH WAY
EXIST	EXISTING
FF	FINISHED FLOOR
FM	FORCE MAIN
GV	GATE VALVE
HYD	HYDRANT
INV	INVERT
LS	LIFT STATION
MISC	MISCELLANEOUS
MJ	MECHANICAL JOINT
NIC	NOT IN CONTRACT
NTS	NOT TO SCALE
NZL	NOZZLE
PB	PULL BOX
PN	PROJECT NUMBER
PROP	PROPOSED
PS	PUMP STATION
PVC	POLYVINYL CHLORIDE
R&D	REMOVE & DISPOSE
RGS	RIGID GALVANIZED STEEL
ROW	RIGHT OF WAY
S	SEWER
SCH	SCHEDULE
SFM	SEWER FORCE MAIN
SMDP	SITE MAIN DISTRIBUTION PANEL
SMH	SEWER MANHOLE
SS	STAINLESS STEEL
T	TRANSFORMER
T&B	TOP & BOTTOM
TBD	TO BE DETERMINED
TOC	TOP OF CONCRETE
TYP	TYPICAL
UNO	UNLESS NOTED OTHERWISE
W/	WITH
W	WATER

THESE DRAWINGS ARE "NOT APPROVED FOR CONSTRUCTION" SINCE THESE ARE BASED UPON ASSUMED CONDITIONS. THE CONTRACTOR SHALL NOT PROCEED WITH CONSTRUCTION UNTIL THE ASSUMED CONDITIONS ARE VALIDATED AND APPROVAL IS RECEIVED FROM THE CONTRACTING OFFICER.

COMMONWEALTH OF MASSACHUSETTS GEORGE C. HAMILTON PROFESSIONAL ENGINEER

UNLESS OTHERWISE NOTED, LINEAR DIMENSIONS SHOWN ARE IN METERS.

DESIGN COMPLETE SUBMITTAL

SYMB	DESCRIPTION	DATE	APR
FNL	DESIGN COMPLETE SUBMITTAL	02–06–12	DMG

DESIGNED BY: PSR | DATE: 02–06–2012
DRAWN BY: PSR | SUBMITTED BY: TETRA TECH
CHECKED BY: GCH | FILE NO.: AF1202––C001GN

TETRA TECH

US Army Corps of Engineers Middle East District

COMMAND & CONTROL FACILITY
KANDAHAR AIR FIELD, AFGHANISTAN
SITE DESIGN
CIVIL GENERAL NOTES, LEGEND AND ABBREVIATIONS

SHEET REFERENCE NUMBER:
–
C–001

W:\23308\127–23308–11004\CAD\MED Drawings\AF1202\Site Design\Civil\AF1202––C001GN.dwg 3/7/2012 8:30:17 AM Jeffers, Scott

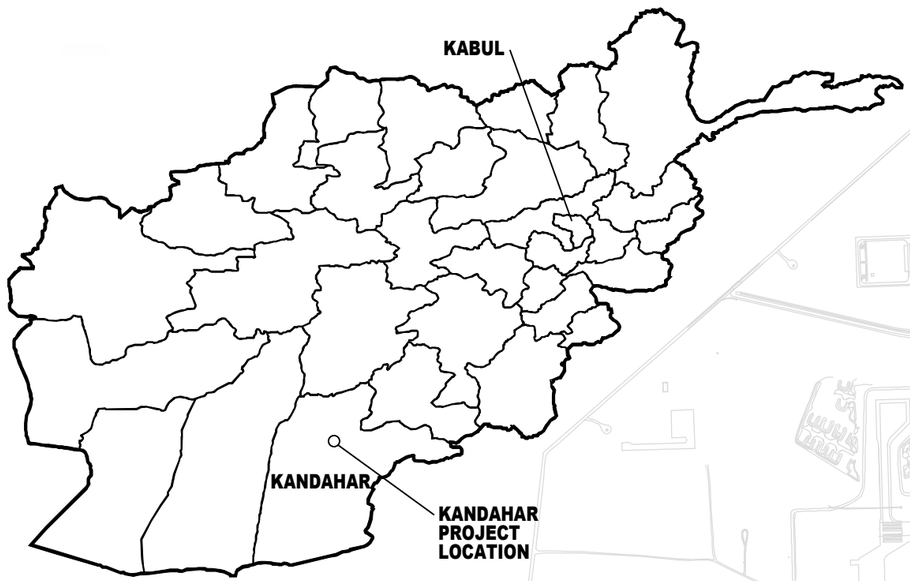

REGIONAL LOCUS PLAN
SCALE: NTS

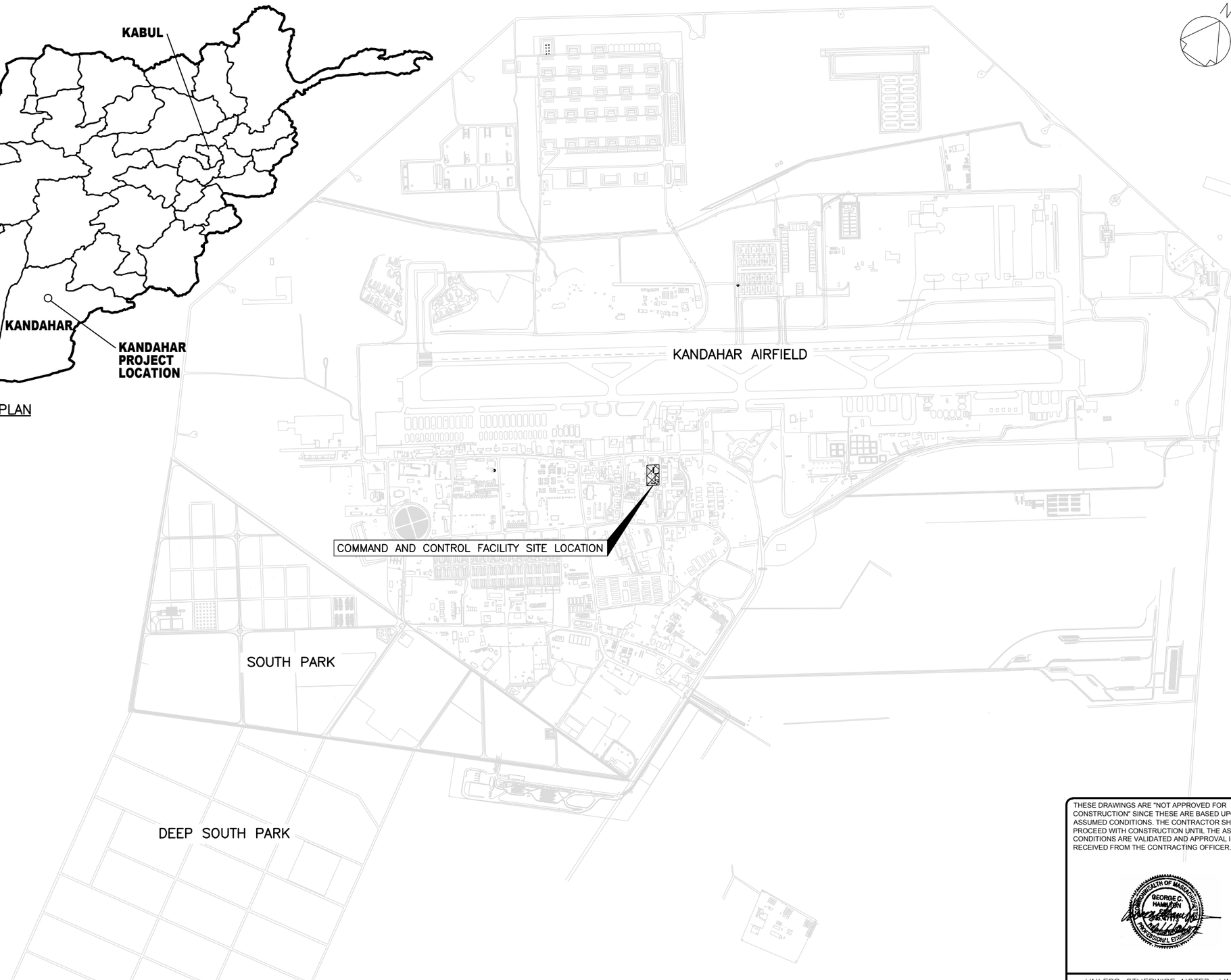

THESE DRAWINGS ARE "NOT APPROVED FOR CONSTRUCTION" SINCE THESE ARE BASED UPON ASSUMED CONDITIONS. THE CONTRACTOR SHALL NOT PROCEED WITH CONSTRUCTION UNTIL THE ASSUMED CONDITIONS ARE VALIDATED AND APPROVAL IS RECEIVED FROM THE CONTRACTING OFFICER.

COMMONWEALTH OF MASSACHUSETTS
GEORGE C. HAMILTON
PROFESSIONAL ENGINEER

UNLESS OTHERWISE NOTED, LINEAR DIMENSIONS SHOWN ARE IN METERS.

DESIGN COMPLETE SUBMITTAL

SYMB	DESCRIPTION	DATE	APR
FNL	DESIGN COMPLETE SUBMITTAL	02-06-12	DMG

DESIGNED BY: PSR
DATE: 02-06-2012
DRAWN BY: PSR
SUBMITTED BY: TETRA TECH
CHECKED BY: GCH
FILE NO.: AF1202--C002PN

TETRA TECH

US Army Corps of Engineers
Middle East District

COMMAND & CONTROL FACILITY
KANDAHAR AIR FIELD, AFGHANISTAN
SITE DESIGN
LOCATION AND VICITINTY PLAN

SHEET REFERENCE NUMBER:
–
C–002

W:\23308\127-23308-11004\CAD\MED Drawings\AF1202\Site Design\Civil\AF1202--C002PN.dwg 3/7/2012 8:31:14 AM Jeffers, Scott

NOTES:

1. PARCEL LINE BASED ON INFORMATION PROVIDED BY GOVERNMENT OFFICIALS. LOCATIONS OF ALL EXISTING UTILITIES/OBSTRUCTIONS/SYSTEMS SHOWN HEREON ARE APPROXIMATE ONLY. ALL UTILITIES/OBSTRUCTIONS/SYSTEMS MAY NOT BE SHOWN. CONTRACTOR SHALL BE RESPONSIBLE FOR LOCATING AND PROTECTING ALL UTILITIES/OBSTRUCTIONS/SYSTEMS WHETHER SHOWN OR NOT SHOWN.
2. HATCHED AREA IS TO BE CLEARED FOR CONSTRUCTION OF PROPOSED IMPROVEMENTS. EXISTING FACILITIES WITHIN DEMOLITION AREA ARE CONSIDERED TEMPORARY STRUCTURES REQUIRING REMOVAL OR DEMOLITION BY THE CONTRACTOR. THE CONTRACTOR SHALL COORDINATE WITH THE CONTRACTING OFFICER FOR SPECIFIC REQUIREMENTS ASSOCIATED WITH THESE FACILITIES PRIOR TO INITIATING DEMOLITION ACTIVITIES.
3. CONTRACTOR SHALL ENSURE THAT ALL EXISTING CONCRETE AND ASPHALT PAVING, SLABS AND AGGREGATE BASE HAVE BEEN SAWCUT AND REMOVED CONTIGUOUS TO PARCEL LINE.
4. CONSTRUCTION DEBRIS, INCLUDING BROKEN PAVEMENT, SHALL BE TRANSPORTED TO OFFSITE DISPOSAL AREA IN COORDINATION WITH CONTRACTING OFFICER.
5. CONTRACTOR TO ENSURE THAT TREES ARE GRUBBED AND CLEARED AS REQUIRED. COORDINATE LIMITS OF TREE REMOVAL, PRUNING, CLEARING AND GRUBBING WITH THE CONTRACTING OFFICER.
6. CONTRACTOR SHALL ENSURE THAT ALL EXISTING DRAIN PIPE AND MANHOLES LOCATED WITHIN SITE LIMITS THAT ARE PROPOSED TO BE ABANDONED HAVE BEEN BACKFILLED WITH COMPACTED BACKFILL PER SPECIFICATIONS.
7. CONTRACTOR IS TO PROTECT ALL UTILITIES TO REMAIN AND MAINTAIN UTILITY SERVICE THROUGHOUT CONSTRUCTION.

LEGEND

AREA OF DEMOLITION

5 0 5 10
1:150

THESE DRAWINGS ARE "NOT APPROVED FOR CONSTRUCTION" SINCE THESE ARE BASED UPON ASSUMED CONDITIONS. THE CONTRACTOR SHALL NOT PROCEED WITH CONSTRUCTION UNTIL THE ASSUMED CONDITIONS ARE VALIDATED AND APPROVAL IS RECEIVED FROM THE CONTRACTING OFFICER.

COMMONWEALTH OF MASSACHUSETTS
GEORGE C. HAMILTON
PROFESSIONAL ENGINEER

UNLESS OTHERWISE NOTED, LINEAR DIMENSIONS SHOWN ARE IN METERS.

DESIGN COMPLETE SUBMITTAL

SYMB	DESCRIPTION	DATE	APR
FNL	DESIGN COMPLETE SUBMITTAL	02-06-12	DMG

DESIGNED BY: GCH
DATE: 02-06-2012
DRAWN BY: ADQ
SUBMITTED BY: TETRA TECH
CHECKED BY: GCH
FILE NO.: AF1202--C101PN

TETRA TECH

US Army Corps of Engineers
Middle East District

COMMAND & CONTROL FACILITY
KANDAHAR AIR FIELD, AFGHANISTAN
SITE DESIGN
EXISTING CONDITIONS AND DEMOLITION PLAN

SHEET REFERENCE NUMBER:
–
C–101

W:\23308\127-23308-11004\CAD\MED Drawings\AF1202\Site Design\Civil\AF1202--C101PN.dwg 3/7/2012 8:32:39 AM Jeffers, Scott

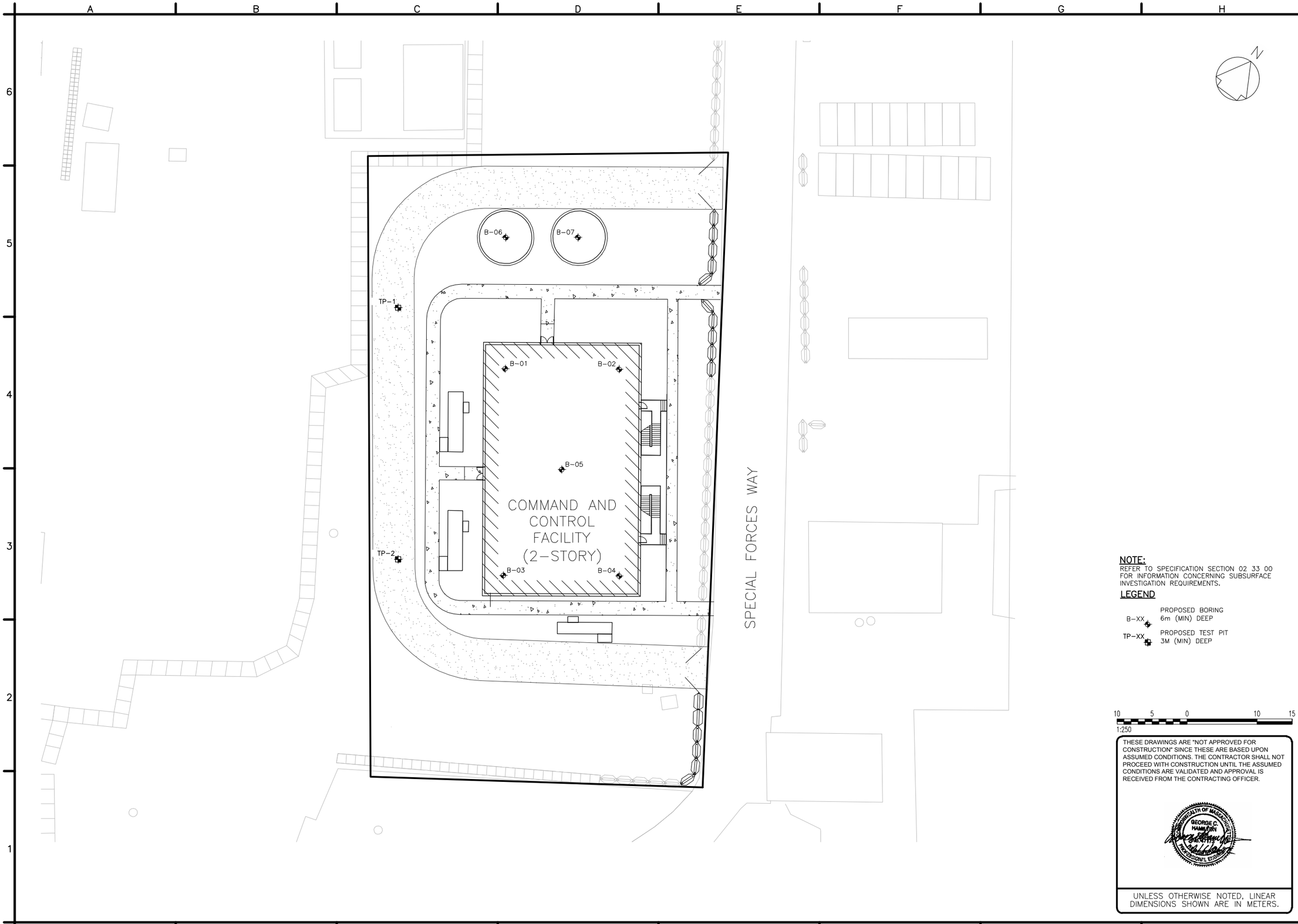

NOTE:
REFER TO SPECIFICATION SECTION 02 33 00 FOR INFORMATION CONCERNING SUBSURFACE INVESTIGATION REQUIREMENTS.

LEGEND

B-XX — PROPOSED BORING 6m (MIN) DEEP

TP-XX — PROPOSED TEST PIT 3M (MIN) DEEP

10 5 0 10 15
1:250

THESE DRAWINGS ARE "NOT APPROVED FOR CONSTRUCTION" SINCE THESE ARE BASED UPON ASSUMED CONDITIONS. THE CONTRACTOR SHALL NOT PROCEED WITH CONSTRUCTION UNTIL THE ASSUMED CONDITIONS ARE VALIDATED AND APPROVAL IS RECEIVED FROM THE CONTRACTING OFFICER.

COMMONWEALTH OF MASSACHUSETTS
GEORGE C. HAMILTON
No. 32873
PROFESSIONAL ENGINEER

UNLESS OTHERWISE NOTED, LINEAR DIMENSIONS SHOWN ARE IN METERS.

DESIGN COMPLETE SUBMITTAL

SYMB	DESCRIPTION	DATE	
FNL	DESIGN COMPLETE SUBMITTAL	02-06-12	DMG APR

DESIGNED BY: GCH
DATE: 02-06-2012
DRAWN BY: ADQ
SUBMITTED BY: TETRA TECH
CHECKED BY: GCH
FILE NO.: AF1202--C121PN

TETRA TECH

US Army Corps of Engineers
Middle East District

COMMAND & CONTROL FACILITY
KANDAHAR AIR FIELD, AFGHANISTAN
SITE DESIGN
BORING PLAN

SHEET REFERENCE NUMBER:
–
C-121

W:\23308\127-23308-11004\CAD\MED Drawings\AF1202\Site Design\Civil\AF1202--C121PN.dwg 3/7/2012 8:34:18 AM Jeffers, Scott

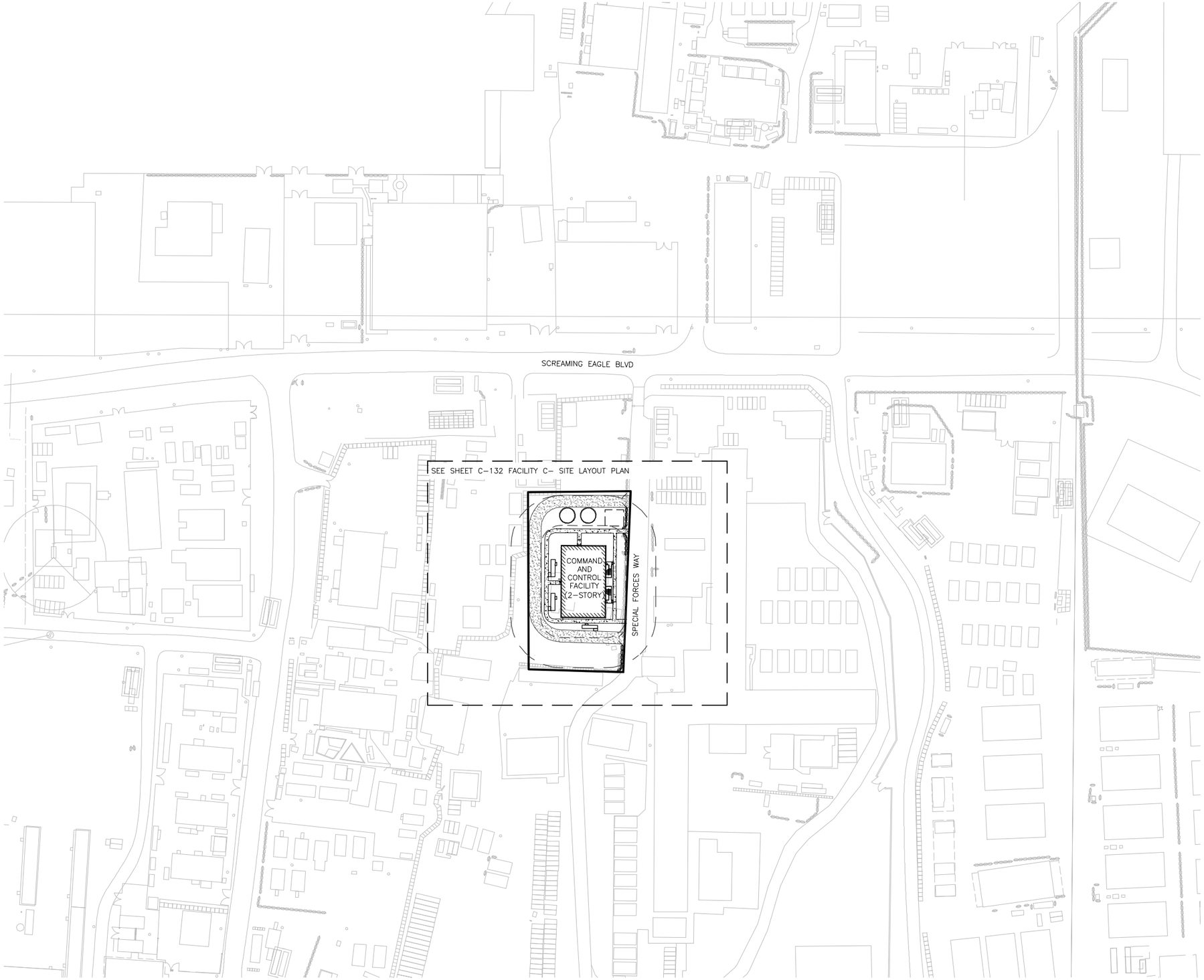

DESIGN COMPLETE SUBMITTAL

SYMB	DESCRIPTION	DATE	
FNL	DESIGN COMPLETE SUBMITTAL	02-06-12	DMG APR

DESIGNED BY: XXX	DATE: 02-06-2012		
DRAWN BY: ADQ	SUBMITTED BY: TETRA TECH		
CHECKED BY: GCH	FILE NO.: AF1202--C131PN		

TETRA TECH

US Army Corps of Engineers Middle East District

COMMAND & CONTROL FACILITY
KANDAHAR AIR FIELD, AFGHANISTAN
SITE DESIGN
OVERALL SITE LAYOUT PLAN

SHEET REFERENCE NUMBER:
–
C–131

NOTES:

1. CONTRACTOR SHALL SET FINISH FLOOR ELEVATION A MINIMUM OF 300mm ABOVE FINISH GRADE ADJACENT TO THE BUILDING AND ENSURE POSITIVE DRAINAGE AWAY FROM BUILDING.

50 25 0 25 50
1:1000

THESE DRAWINGS ARE "NOT APPROVED FOR CONSTRUCTION" SINCE THESE ARE BASED UPON ASSUMED CONDITIONS. THE CONTRACTOR SHALL NOT PROCEED WITH CONSTRUCTION UNTIL THE ASSUMED CONDITIONS ARE VALIDATED AND APPROVAL IS RECEIVED FROM THE CONTRACTING OFFICER.

COMMONWEALTH OF MASSACHUSETTS
GEORGE C. HAMILTON
No. 47115
PROFESSIONAL ENGINEER

UNLESS OTHERWISE NOTED, LINEAR DIMENSIONS SHOWN ARE IN METERS.

W:\23308\127-23308-11004\CAD\MED Drawings\AF1202\Site Design\Civil\AF1202--C131PN.dwg 3/7/2012 8:37:09 AM Jeffers, Scott

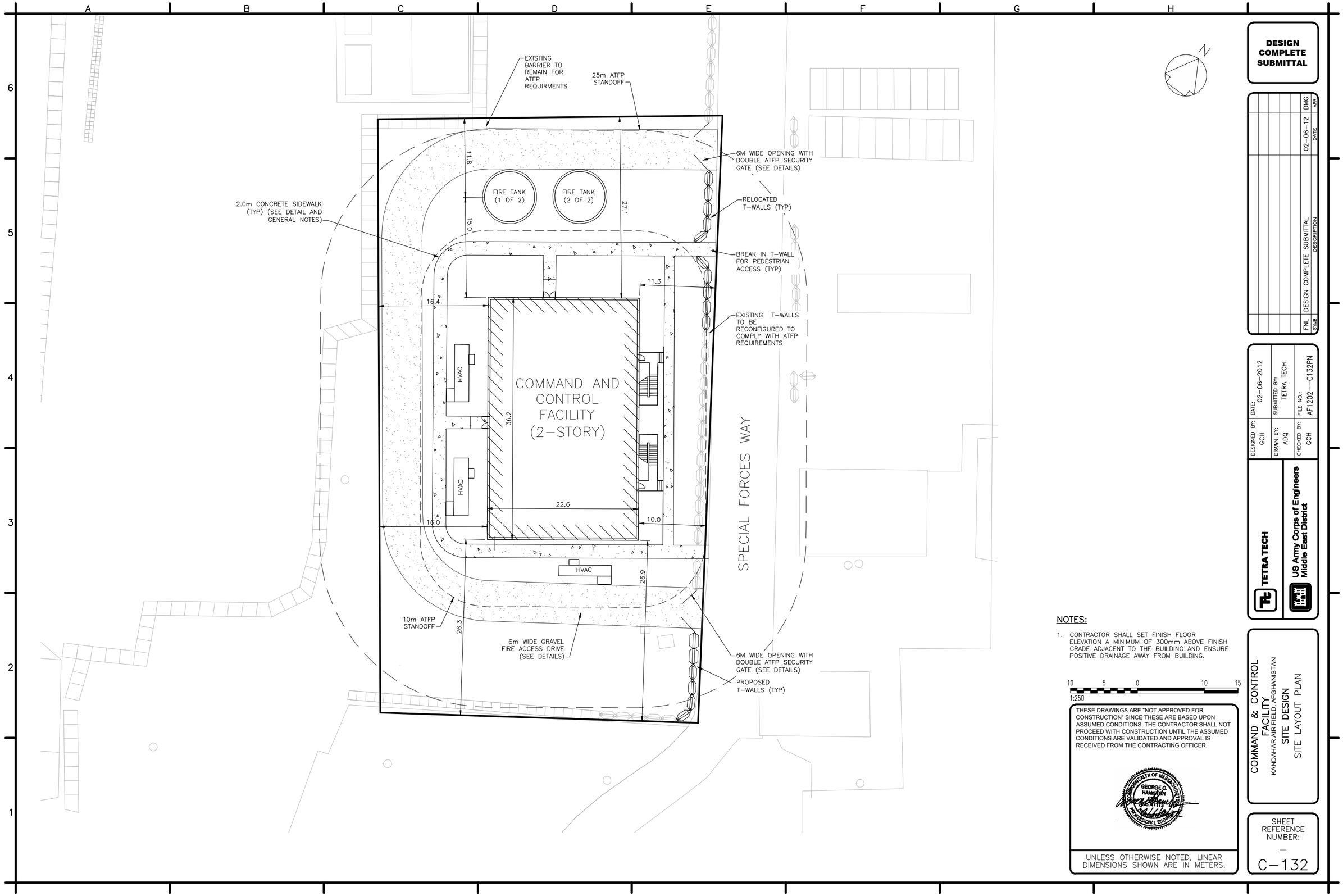

NOTES:

1. CONTRACTOR SHALL SET FINISH FLOOR ELEVATION A MINIMUM OF 300mm ABOVE FINISH GRADE ADJACENT TO THE BUILDING AND ENSURE POSITIVE DRAINAGE AWAY FROM BUILDING.

10 5 0 10 15
1:250

THESE DRAWINGS ARE "NOT APPROVED FOR CONSTRUCTION" SINCE THESE ARE BASED UPON ASSUMED CONDITIONS. THE CONTRACTOR SHALL NOT PROCEED WITH CONSTRUCTION UNTIL THE ASSUMED CONDITIONS ARE VALIDATED AND APPROVAL IS RECEIVED FROM THE CONTRACTING OFFICER.

COMMONWEALTH OF MASSACHUSETTS
GEORGE C. HAMILTON
No. 44911
PROFESSIONAL ENGINEER

UNLESS OTHERWISE NOTED, LINEAR DIMENSIONS SHOWN ARE IN METERS.

DESIGN COMPLETE SUBMITTAL

SYMB	DESCRIPTION	DATE	APR
FNL	DESIGN COMPLETE SUBMITTAL	02-06-12	DMG

DESIGNED BY: GCH
DATE: 02-06-2012
DRAWN BY: ADQ
SUBMITTED BY: TETRA TECH
CHECKED BY: GCH
FILE NO.: AF1202--C132PN

TETRA TECH

US Army Corps of Engineers
Middle East District

COMMAND & CONTROL FACILITY
KANDAHAR AIR FIELD, AFGHANISTAN
SITE DESIGN
SITE LAYOUT PLAN

SHEET REFERENCE NUMBER:
–
C–132

W:\23308\127-23308-11004\CAD\MED Drawings\AF1202\Site Design\Civil\AF1202--C132PN.dwg 3/7/2012 8:39:11 AM Jeffers, Scott

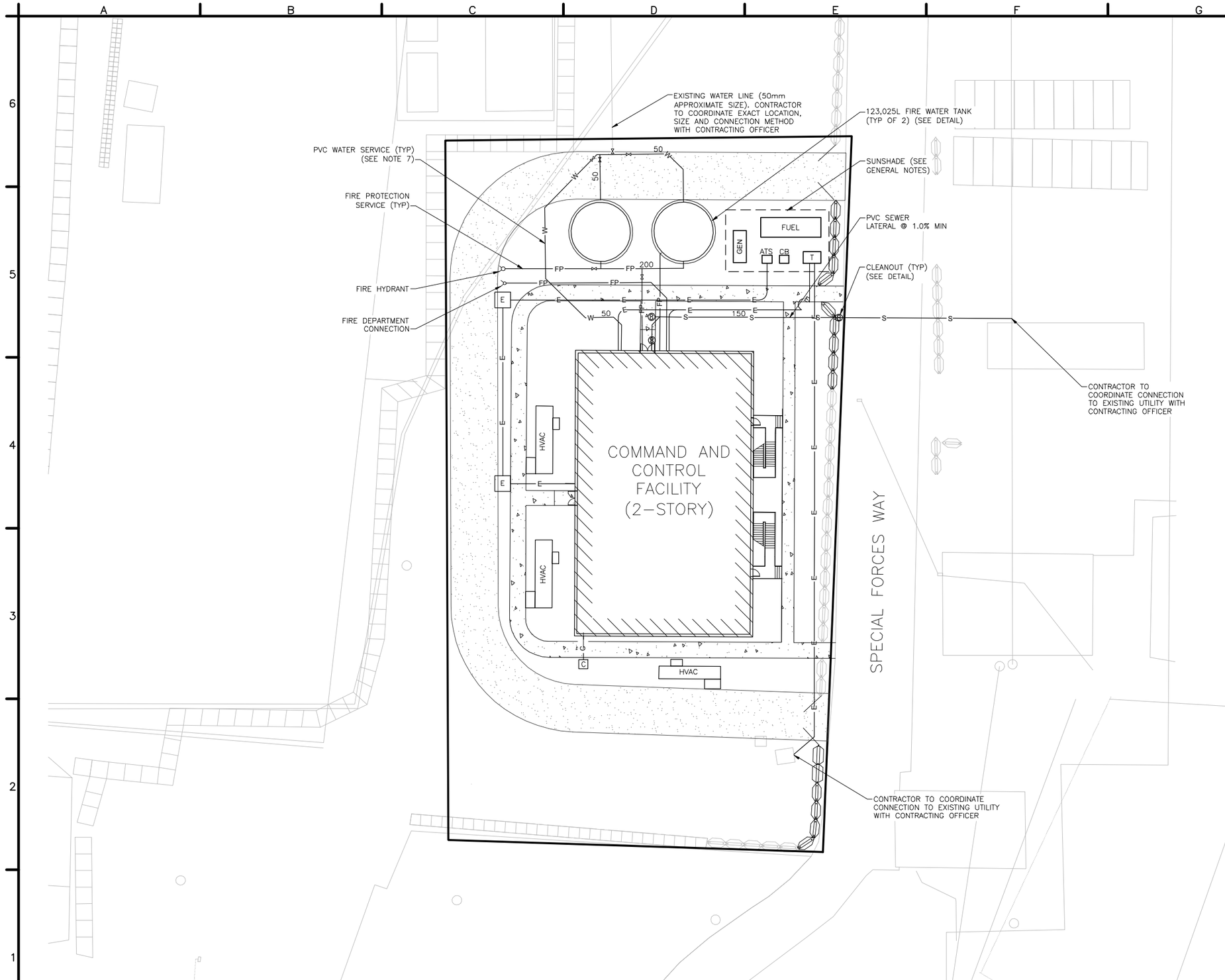

NOTES:

1. CONTRACTOR IS TO CONFIRM INVERT ELEVATION AT THE EXISTING SEWER CONNECTION WITH THE CONTRACTING OFFICER IN ORDER TO DETERMINE EXACT SLOPE OF THE SERVICE LATERAL.
2. CONTRACTOR TO VERIFY ALL SLOPES AND INVERTS TO ENSURE A MINIMUM OF 400mm COVER FROM FINISH GRADE TO TOP OF SEWER PIPE.
3. CONTRACTOR SHALL CONSTRUCT WATER/SEWER IN ACCORDANCE WITH SPECIFICATION 33 11 00 AND 33 30 00.
4. REFER TO ELECTRICAL DRAWINGS FOR SITE ELECTRICAL INFORMATION AND NOTES.
5. ALL PIPE SIZES SHOWN ARE IN MILLIMETERS UNLESS OTHERWISE NOTED.
6. CONTRACTOR TO COORDINATE LOCATION OF GATE VALVES AND SERVICE PIPING TO ELIMINATE CONFLICTS AND PROVIDE ADEQUATE SPACING WITHIN TRENCH.

10 5 0 10 15
1:250

THESE DRAWINGS ARE "NOT APPROVED FOR CONSTRUCTION" SINCE THESE ARE BASED UPON ASSUMED CONDITIONS. THE CONTRACTOR SHALL NOT PROCEED WITH CONSTRUCTION UNTIL THE ASSUMED CONDITIONS ARE VALIDATED AND APPROVAL IS RECEIVED FROM THE CONTRACTING OFFICER.

COMMONWEALTH OF MASSACHUSETTS
GEORGE O. HAMILTON
PROFESSIONAL ENGINEER

UNLESS OTHERWISE NOTED, LINEAR DIMENSIONS SHOWN ARE IN METERS.

DESIGN COMPLETE SUBMITTAL

STAB	DESCRIPTION	DATE	APR
FNL	DESIGN COMPLETE SUBMITTAL	02-06-12	DMG

DESIGNED BY: GCH
DRAWN BY: ADQ
CHECKED BY: GCH
DATE: 02-06-2012
SUBMITTED BY: TETRA TECH
FILE NO.: AF1202--C141PN

TETRA TECH

US Army Corps of Engineers
Middle East District

COMMAND & CONTROL FACILITY
KANDAHAR AIR FIELD, AFGHANISTAN
SITE DESIGN
UTILITY PLAN

SHEET REFERENCE NUMBER:
–
C-141

W:\23308\127-23308-11004\CAD\MED Drawings\AF1202\Site Design\Civil\AF1202--C141PN.dwg 3/7/2012 8:41:32 AM Jeffers, Scott

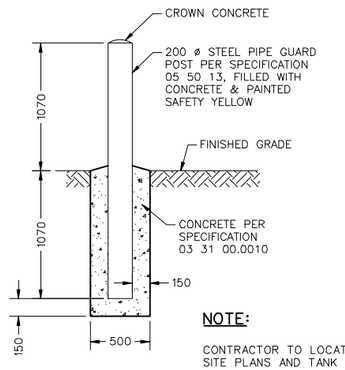

NOTE:

CONTRACTOR TO LOCATE BOLLARDS PER SITE PLANS AND TANK STRUCTURAL DETAILS.

CONCRETE FILLED BOLLARD DETAIL
NTS

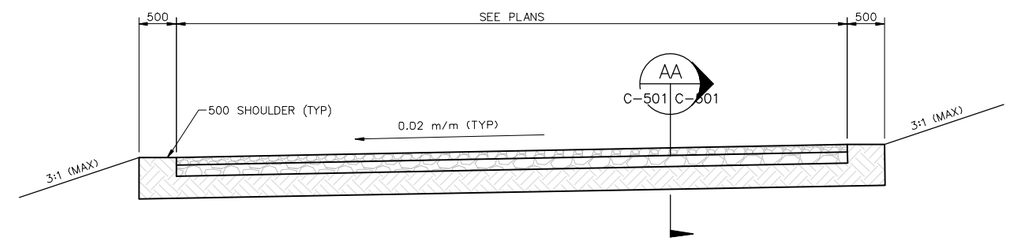

GRAVEL FIRE ACCESS DRIVE SECTION
NTS

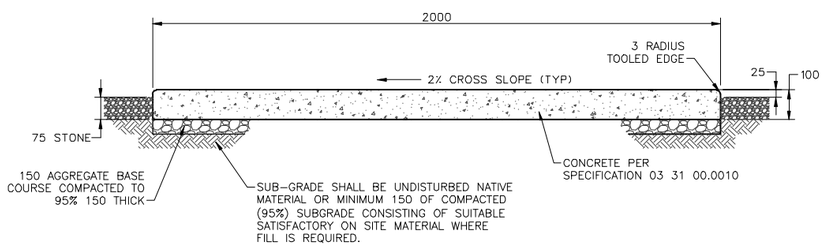

NOTES:

1. CONTROL JOINTS ARE TO BE AT 1800 INTERVALS, EXPANSION JOINTS EVERY 5400.
2. REINFORCING SHALL BE CONTINUOUS THROUGH CONSTRUCTION AND CONTROL JOINTS ONLY.
3. REFER TO SITE STRUCTURAL DRAWINGS FOR CONCRETE NOTES.

CONCRETE WALKWAY DETAIL
NTS

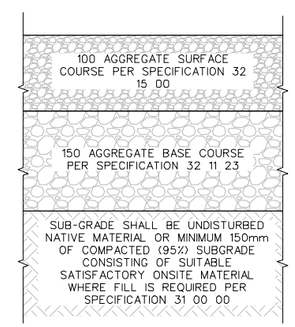

GRAVEL FIRE ACCESS DRIVE SECTION
NTS

AA
C-501 C-501

THESE DRAWINGS ARE "NOT APPROVED FOR CONSTRUCTION" SINCE THESE ARE BASED UPON ASSUMED CONDITIONS. THE CONTRACTOR SHALL NOT PROCEED WITH CONSTRUCTION UNTIL THE ASSUMED CONDITIONS ARE VALIDATED AND APPROVAL IS RECEIVED FROM THE CONTRACTING OFFICER.

COMMONWEALTH OF MASSACHUSETTS
GEORGE C. HAMILTON
No. 35477
PROFESSIONAL ENGINEER

UNLESS OTHERWISE NOTED, LINEAR DIMENSIONS SHOWN ARE IN MILLIMETERS.

DESIGN COMPLETE SUBMITTAL

SYMB	DESCRIPTION	DATE	APR
FNL	DESIGN COMPLETE SUBMITTAL	02-06-12	DMG

DESIGNED BY: GCH
DATE: 02-06-2012
DRAWN BY: ADQ
SUBMITTED BY: TETRA TECH
CHECKED BY: GCH
FILE NO.: AF1202--C501DT

TETRA TECH

US Army Corps of Engineers
Middle East District

COMMAND & CONTROL FACILITY
KANDAHAR AIR FIELD, AFGHANISTAN
SITE DESIGN
SITE DETAILS

SHEET REFERENCE NUMBER:
—
C-501

W:\23308\127-23308-11004\CAD\MED Drawings\AF1202\Site Design\Civil\AF1202--C501DT.dwg 3/7/2012 8:43:06 AM Jeffers, Scott

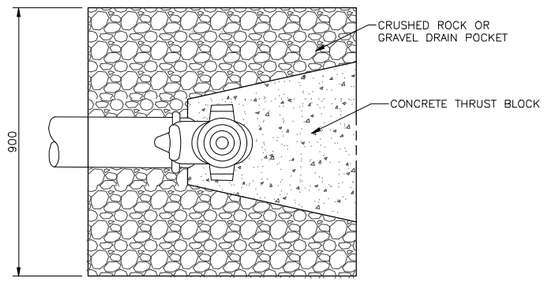

FIRE HYDRANT PLAN
NTS

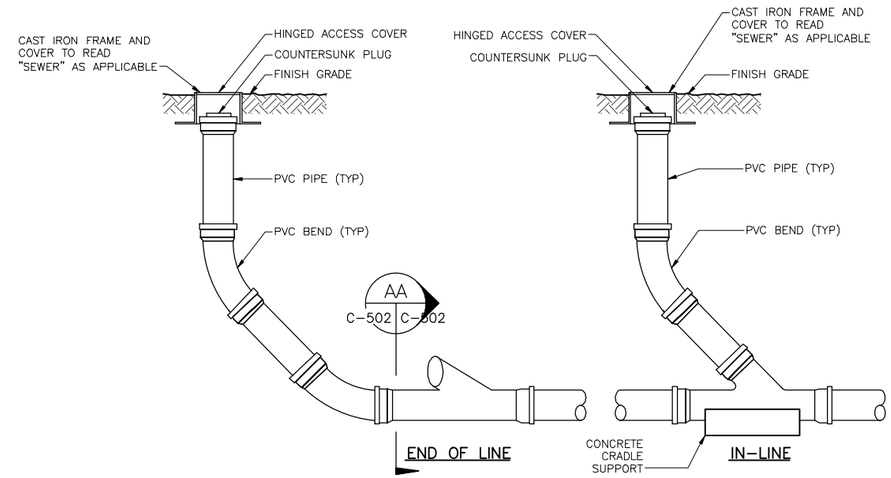

SEWER CLEANOUT TO GRADE
NTS

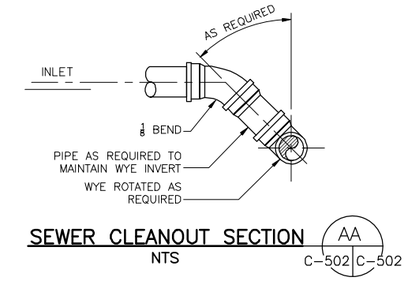

SEWER CLEANOUT SECTION
NTS

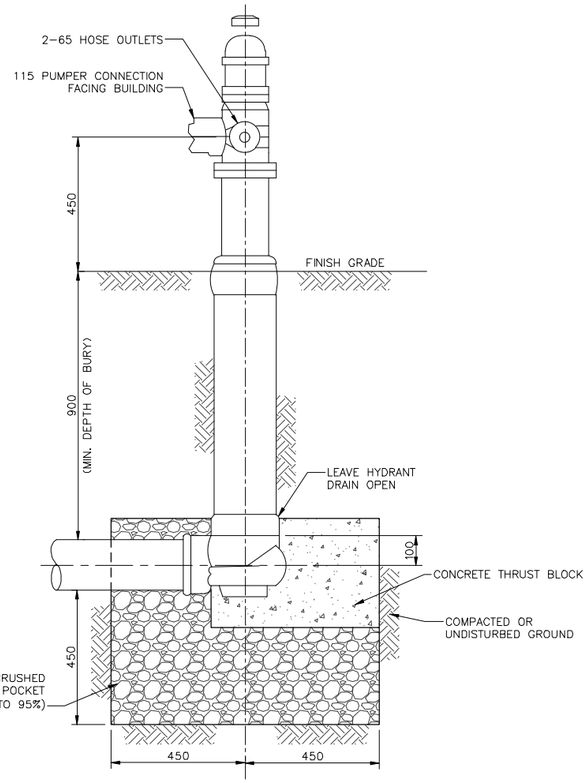

FIRE HYDRANT (DRY TYPE)
NTS

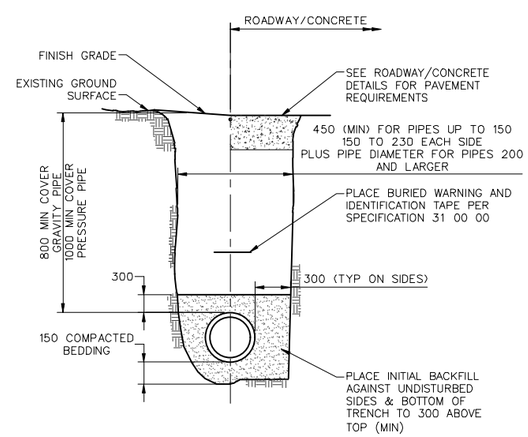

PIPE TRENCH DETAIL
NTS

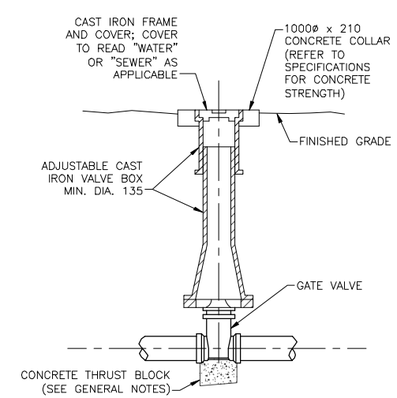

BURIED GATE VALVE
NTS

THESE DRAWINGS ARE "NOT APPROVED FOR CONSTRUCTION" SINCE THESE ARE BASED UPON ASSUMED CONDITIONS. THE CONTRACTOR SHALL NOT PROCEED WITH CONSTRUCTION UNTIL THE ASSUMED CONDITIONS ARE VALIDATED AND APPROVAL IS RECEIVED FROM THE CONTRACTING OFFICER.

UNLESS OTHERWISE NOTED, LINEAR DIMENSIONS SHOWN ARE IN MILLIMETERS.

DESIGN COMPLETE SUBMITTAL

SYMB	DESCRIPTION	DATE	APR
FNL	DESIGN COMPLETE SUBMITTAL	02-06-12	DMG

DESIGNED BY: GCH
DATE: 02-06-2012
DRAWN BY: ADQ
SUBMITTED BY: TETRA TECH
CHECKED BY: GCH
FILE NO.: AF1202--C502DT

TETRA TECH

US Army Corps of Engineers
Middle East District

COMMAND & CONTROL FACILITY
KANDAHAR AIR FIELD, AFGHANISTAN
SITE DESIGN
SITE UTILITY DETAILS

SHEET REFERENCE NUMBER:
–
C-502

W:\23308\127-23308-11004\CAD\MED Drawings\AF1202\Site Design\Civil\AF1202--C502DT.dwg 3/7/2012 8:44:49 AM Jeffers, Scott

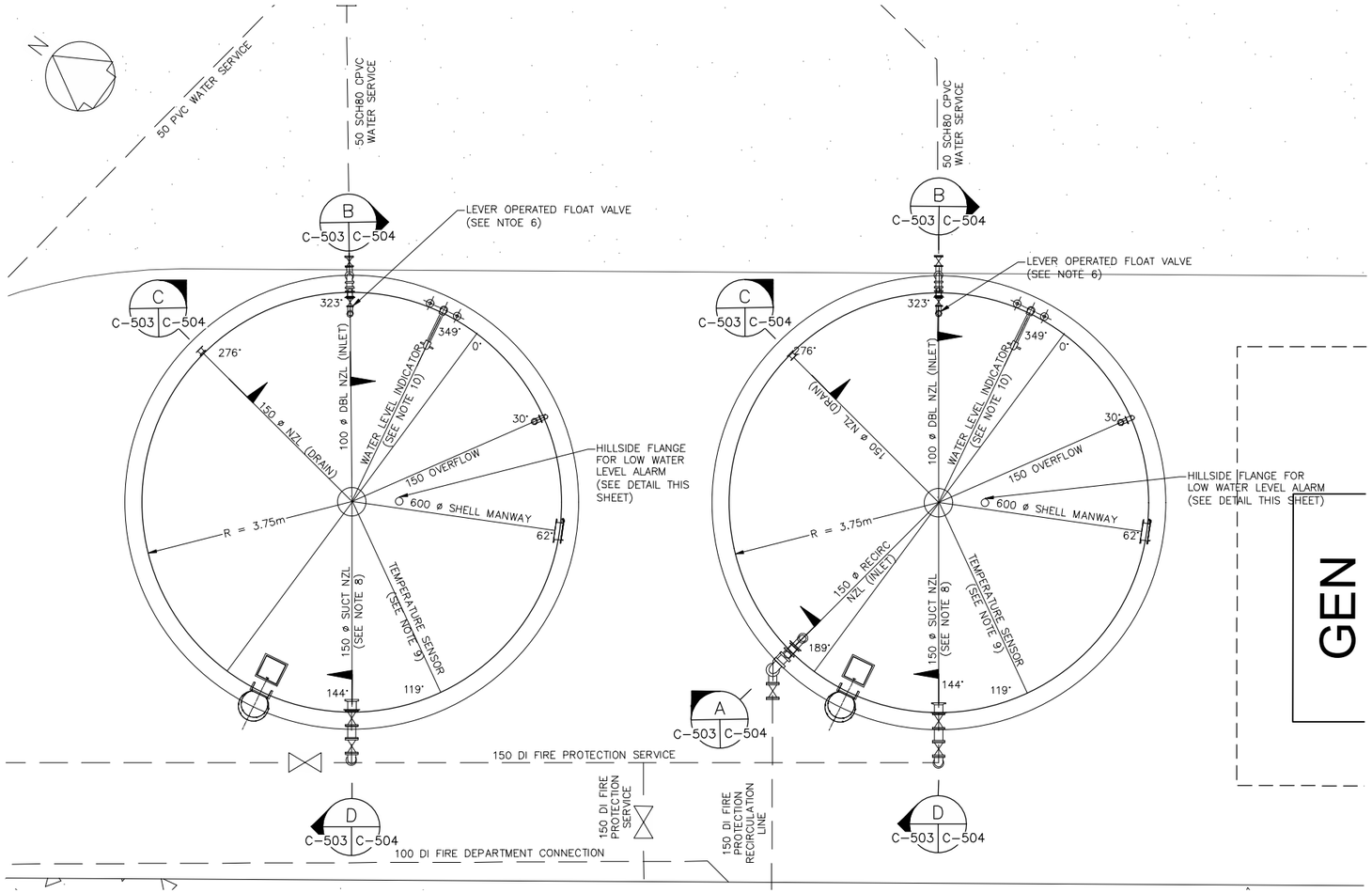

(2)132,500 L (35,000 GALLON) FIRE SUPPRESSION WATER TANKS

NTS

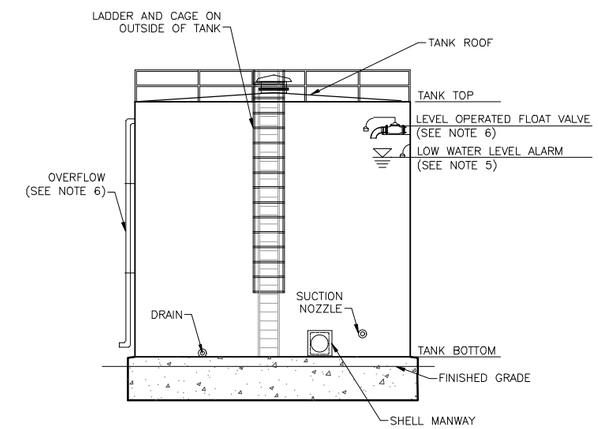

132,500L (35,000 GALLON) TANK TYPICAL ELEVATION – FACILITY C

NTS

TANK NOTES:

1. 0° PLAN ORIENTATION IS EQUAL TO PLAN NORTH.
2. FOR ALL PIPE CONNECTIONS, APPURTENANCES, AND SUPPORTS SEE DETAILS ON SHEET C–504.
3. ALL EXPOSED NON–GALVANIZED STEEL AND PVC PIPE SURFACES TO BE PROTECTED WITH PAINT, FINISH COAT TO BE BLUE, IN ACCORDANCE WITH SPECIFICATION 09 90 00
4. CONTRACTOR SHALL SUPPLY TANK WITH 132,500 LITERS USABLE VOLUME BETWEEN THE TANK OUTLET AND THE LOW WATER LEVEL ALARM FLOAT.
5. CONTRACTOR SHALL SET LOW WATER LEVEL ALARM FLOAT AT USABLE VOLUME WATER LEVEL (132,500 L PER TANK).
6. CONTRACTOR SHALL SET TANK INLET (LEVEL OPERATED FLOAT VALVE) TO BE FULLY OPEN AT THE USABLE VOLUME WATER LEVEL AND FULLY CLOSED 150 ABOVE THE USABLE VOLUME WATER LEVEL. CONTRACTOR SHALL SET OVERFLOW 150 ABOVE TANK INLET.
7. SEE FIRE PROTECTION DRAWINGS FOR CONTINUATION AND WIRING OF FLOATS.
8. CONTRACTOR SHALL SET TANK OUTLET 250 ABOVE FINISH FLOOR ELEVATION OF THE MECHANICAL ROOM.
9. TEMPERATURE SENSOR TO BE SET AT THE SAME ELEVATION AS THE SUCTION CONNECTION. CONNECT TANK TEMPERATURE SUPERVISORY SWITCH TO MONITOR MODULE LOCATED IN MECHANICAL ROOM. SEE FIRE PROTECTION DRAWINGS FOR MONITOR MODULE LOCATION. WIRING SHALL BE IN ACCORDANCE WITH THE FIRE PROTECTION SPECIFICATION.
10. FOR WATER LEVEL INDICTOR SEE DETAIL THIS SHEET.
11. SEE STRUCTURAL SHEETS FOR TANK FOUNDATION AND PIPE SUPPORT DETAIL.
12. BELOW GRADE PIPING SHOWN AS DASHED.
13. SIZE AND LOCATION OF VENT TO BE PROVIDED PER TANK MANUFACTURER'S RECOMMENDATION.
14. ALL TANK ACCESSORIES TO BE PER AWWA D–103.

THESE DRAWINGS ARE "NOT APPROVED FOR CONSTRUCTION" SINCE THESE ARE BASED UPON ASSUMED CONDITIONS. THE CONTRACTOR SHALL NOT PROCEED WITH CONSTRUCTION UNTIL THE ASSUMED CONDITIONS ARE VALIDATED AND APPROVAL IS RECEIVED FROM THE CONTRACTING OFFICER.

COMMONWEALTH OF MASSACHUSETTS GEORGE C. HAMILTON PROFESSIONAL ENGINEER

UNLESS OTHERWISE NOTED, LINEAR DIMENSIONS SHOWN ARE IN MILLIMETERS.

DESIGN COMPLETE SUBMITTAL

SYMB	DESCRIPTION	DATE	APR
FNL	DESIGN COMPLETE SUBMITTAL	02–06–12	DMG

DESIGNED BY: GCH
DATE: 02–06–2012
DRAWN BY: ADQ
SUBMITTED BY: TETRA TECH
CHECKED BY: GCH
FILE NO.: AF1202––C503DT

TETRA TECH

US Army Corps of Engineers Middle East District

COMMAND & CONTROL FACILITY
KANDAHAR AIR FIELD, AFGHANISTAN
SITE DESIGN
FIRE SUPPRESSION TANK DETAILS

SHEET REFERENCE NUMBER:
–
C–503

W:\23308\127–23308–11004\CAD\WED Drawings\AF1202\Site Design\Civil\AF1202––C503DT.dwg 3/7/2012 8:46:37 AM Jeffers, Scott

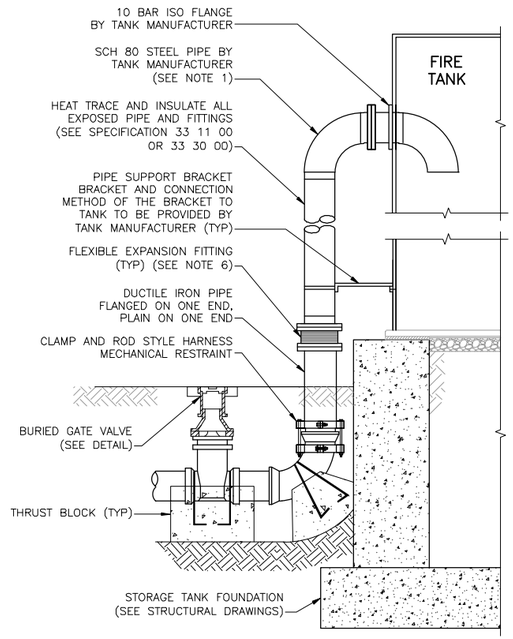

FIRE TANK RECIRCULATION INLET DETAIL

NTS

A C-503 C-504

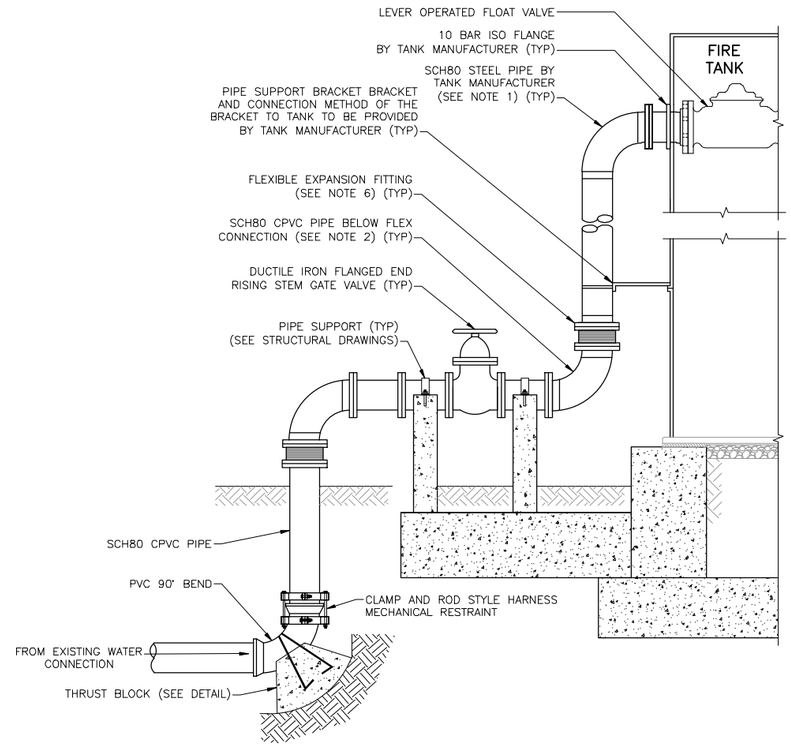

FIRE TANK INLET DETAIL

NTS

B C-503 C-504

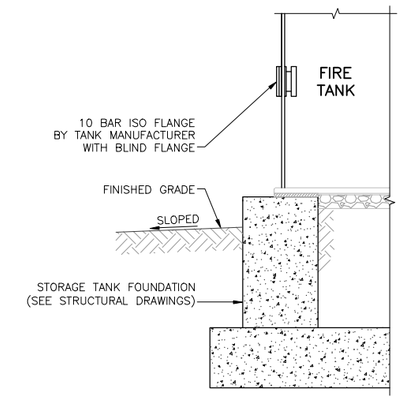

TANK DRAIN DETAIL

NTS

C C-503 C-504

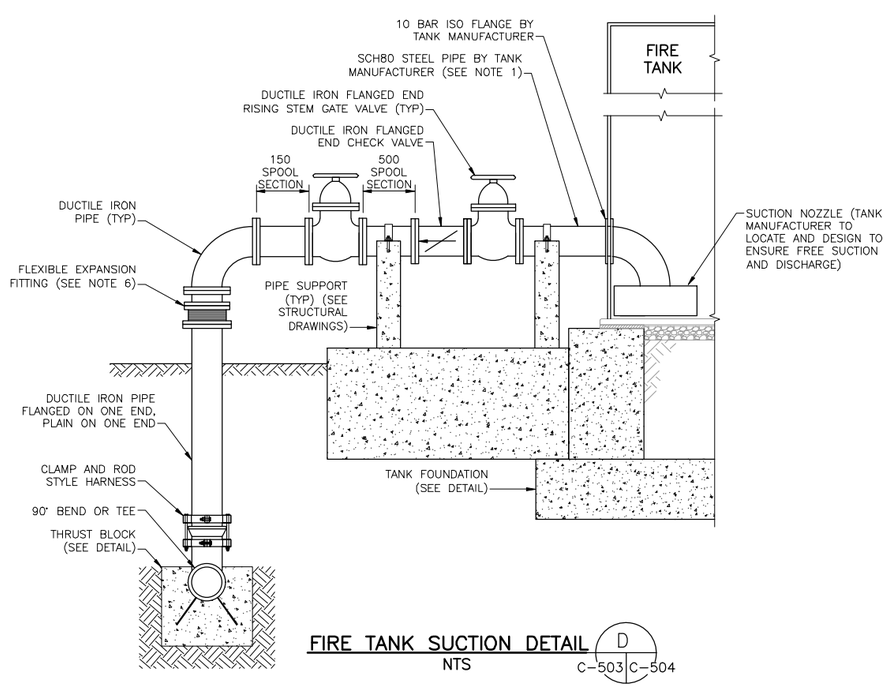

FIRE TANK SUCTION DETAIL

NTS

D C-503 C-504

NOTES:

1. DIMENSION TO CENTER OF PIPE PROVIDED BY TANK DESIGNER/MANUFACTURER. ELEVATION OF TANK PENETRATIONS AND TANK FILL AND OUTLET PIPES TO BE COORDINATED WITH TANK MANUFACTURER'S REQUIREMENTS.
2. ELEVATIONS OF ALL TANK APPURTENANCES ARE CENTERLINE OF FIXTURE. LOCATIONS TO BE COORDINATED WITH THE TANK MANUFACTURER.
3. TANK SHOP DRAWINGS TO CONFIRM EXACT LOCATION OF ROOF MANWAY, SHELL MANWAY, LEVEL INDICATOR, INVERT ELEVATIONS AND ALL OTHER INFORMATION ASSOCIATED WITH TANKS.
4. ALL CONNECTIONS TO TANK AND TANK OVERFLOW AND DRAIN PIPING TO BE SUPPLIED BY TANK MANUFACTURER PER MANUFACTURE'S STANDARDS.
5. ALL EXPOSED NON-GALVANIZED STEEL AND CPVC SURFACES TO BE PROTECTED WITH PAINT FINISH COAT TO BE BLUE PER SPECIFICATION 09 90 00.
6. PROVIDE FLEXIBLE EXPANSION FITTING TO ACCOMMODATE APPROXIMATELY 38mm TO 50mm OF SETTLEMENT. FITTING TO BE RESISTANT TO UV EXPOSURE AND COMPLY WITH PIPE TESTING REQUIREMENTS AS STATED IN SPECIFICATIONS.
7. REFER TO PLAN SHEETS AND DETAILS FOR PIPING LAYOUT.

THESE DRAWINGS ARE "NOT APPROVED FOR CONSTRUCTION" SINCE THESE ARE BASED UPON ASSUMED CONDITIONS. THE CONTRACTOR SHALL NOT PROCEED WITH CONSTRUCTION UNTIL THE ASSUMED CONDITIONS ARE VALIDATED AND APPROVAL IS RECEIVED FROM THE CONTRACTING OFFICER.

UNLESS OTHERWISE NOTED, LINEAR DIMENSIONS SHOWN ARE IN MILLIMETERS.

DESIGN COMPLETE SUBMITTAL

SYMB	DESCRIPTION	DATE	APR
FNL	DESIGN COMPLETE SUBMITTAL	02-06-12	DMG

DESIGNED BY: GCH
DATE: 02-06-2012
DRAWN BY: ADQ
SUBMITTED BY: TETRA TECH
CHECKED BY: GCH
FILE NO.: AF1202--C504DT

TETRA TECH

US Army Corps of Engineers Middle East District

COMMAND & CONTROL FACILITY
KANDAHAR AIR FIELD, AFGHANISTAN
SITE DESIGN
FIRE SUPPRESSION TANK GENERAL DETAILS

SHEET REFERENCE NUMBER:
–
C-504

W:\23308\127-23308-11004\CAD\MED Drawings\AF1202\Site Design\Civil\AF1202--C504DT.dwg 3/7/2012 8:48:56 AM Jeffers, Scott

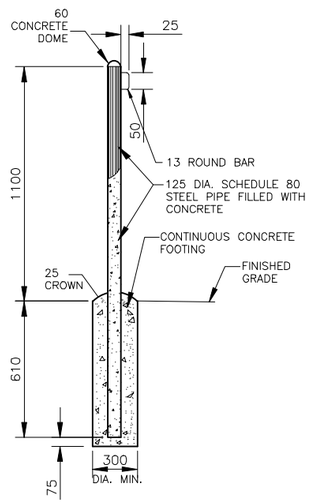

SWING GATE STOP

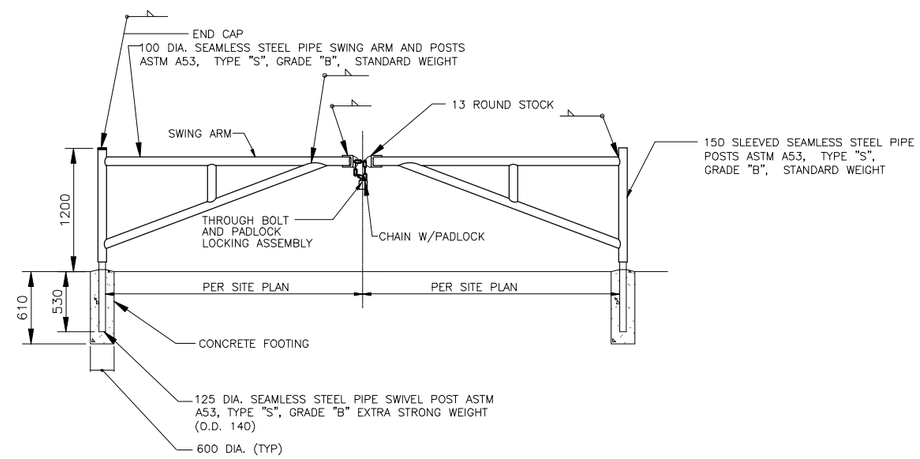

SWING GATE

1. SHOP PRIME PAINT EXPOSED SURFACES. FIELD PAINT EPOXY ENAMEL–YELLOW.
2. PROVIDE "MASTER" PADLOCK OR APPROVED EQUAL WITH 6 WORKING KEYS.
3. CONCRETE PER SPECIFICATION 03 31 00.00 10
4. FILLET WELD 5mm AROUND ENTIRE PIPE.

ATFP SECURITY GATE

NTS

THESE DRAWINGS ARE "NOT APPROVED FOR CONSTRUCTION" SINCE THESE ARE BASED UPON ASSUMED CONDITIONS. THE CONTRACTOR SHALL NOT PROCEED WITH CONSTRUCTION UNTIL THE ASSUMED CONDITIONS ARE VALIDATED AND APPROVAL IS RECEIVED FROM THE CONTRACTING OFFICER.

COMMONWEALTH OF MASSACHUSETTS
GEORGE C. HAMILTON
PROFESSIONAL ENGINEER

UNLESS OTHERWISE NOTED, LINEAR DIMENSIONS SHOWN ARE IN MILLIMETERS.

DESIGN COMPLETE SUBMITTAL

SYMB	DESCRIPTION	DATE	APR
FNL	DESIGN COMPLETE SUBMITTAL	02–06–12	DMG

DESIGNED BY: GCH
DATE: 02–06–2012
DRAWN BY: ADQ
SUBMITTED BY: TETRA TECH
CHECKED BY: GCH
FILE NO.: AF1202––C505DT

TETRA TECH

US Army Corps of Engineers
Middle East District

COMMAND & CONTROL FACILITY
KANDAHAR AIR FIELD, AFGHANISTAN
SITE DESIGN
FENCE AND GATE DETAILS

SHEET REFERENCE NUMBER:
–
C–505

W:\23308\127–23308–11004\CAD\MED Drawings\AF1202\Site Design\Civil\AF1202––C505DT.dwg 3/7/2012 8:50:50 AM Jeffers, Scott

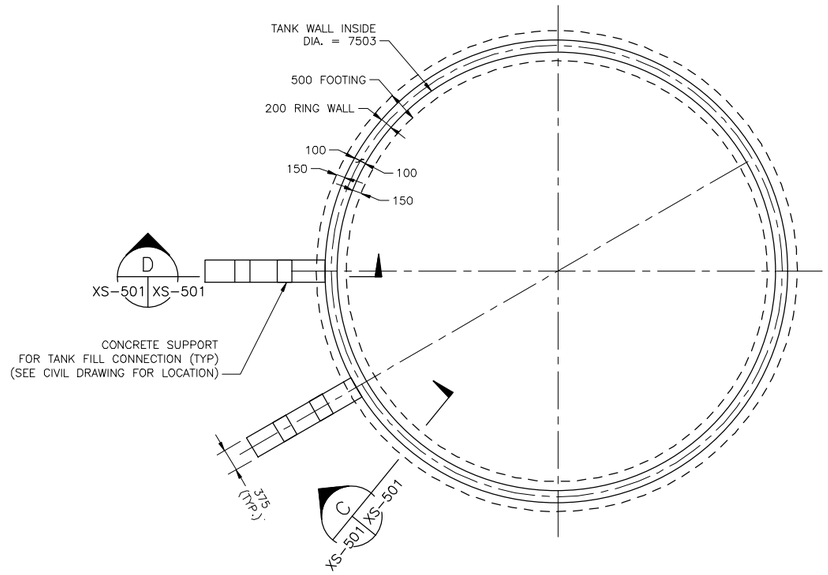

FIRE WATER STORAGE TANK FOUNDATION PLAN

SCALE 1:50

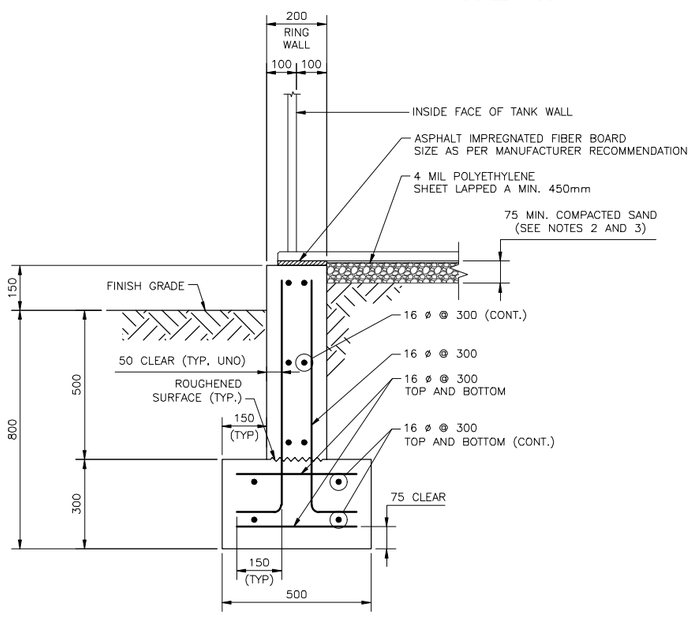

DESIGN BEARING PRESSURE

SEISMIC/WIND: 46.2 kPa [0.96 ksf]

STORAGE TANK FOUNDATION SECTION

SCALE 1:10

C
XS-501 XS-501

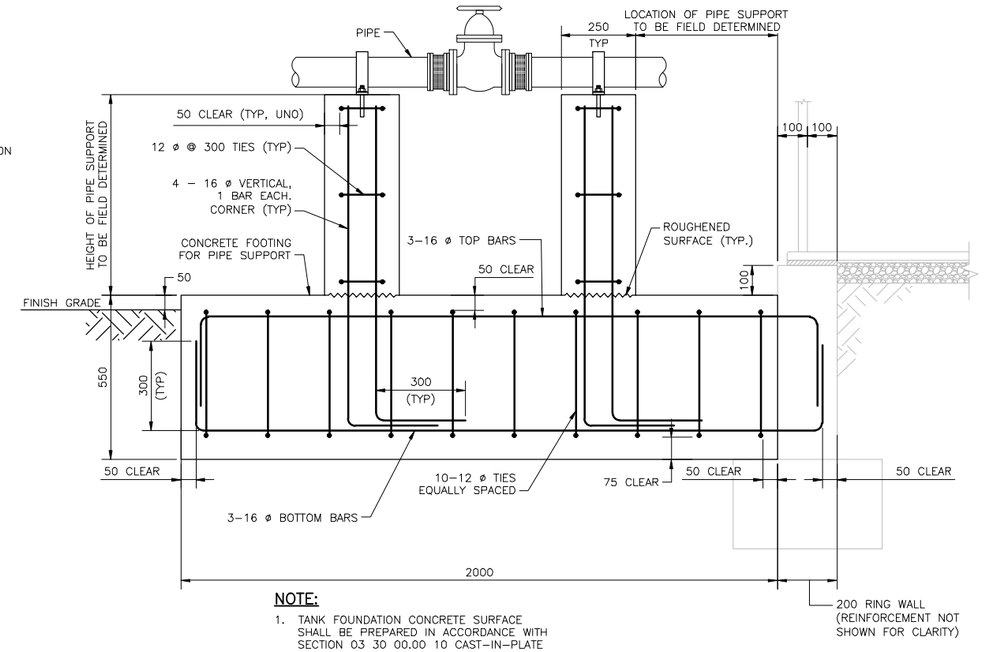

NOTE:

1. TANK FOUNDATION CONCRETE SURFACE SHALL BE PREPARED IN ACCORDANCE WITH SECTION 03 30 00.00 10 CAST-IN-PLATE CONCRETE PRIOR TO PLACEMENT OF CONCRETE FOR PIPE SUPPORT FOOTING.

CONCRETE FOOTING FOR PIPE SUPPORT SECTION

SCALE 1:10

D
XS-501 XS-501

NOTES:

1. THE STORAGE TANK RING FOUNDATION HAS BEEN DESIGNED BASED ON ASSUMED TANK MANUFACTURER. CONTRACTOR TO VERIFY BASED ON ACTUAL EQUIPMENT SELECTED, AND COMPARE WITH THE FOLLOWING REACTIONS, ASSUMED FOR DESIGN:

   DL = 149 kg/m [100 LB/FT]
   LL = 229 kg/m [154 LB/FT]
   WS = 2010 kg [4431 LB]
   WM = 3063 kg–m [22154 FT–LB]
   SS = 8716 kg [19216 LB]
   SM = 10748 kg–m [77740 FT–LB]
   UPLIFT = 0 kg/m [0 LB/FT]

2. FOOTINGS AND THE 75mm COMPACTED SAND UNDER THE TANK SHALL BE PLACED ON NATURAL UNDISTURBED SOIL OR ON COMPACTED SELECT GRANULAR MATERIAL FILL PREPARED AS FOLLOWS:

   a. REMOVE UNSUITABLE MATERIAL BELOW THE FOOTING AND REPLACE WITH COMPACTED SELECT GRANULAR MATERIAL FILL TO A DEPTH WHERE NATURAL SOIL AND OR COMPACT FILL IS ENCOUNTERED.

   b. FILL MATERIAL MUST BE PLACED IN LIFTS UP TO A MAXIMUM OF 150mm IN THICKNESS. EACH LIFT COMPACTED TO A MINIMUM OF 95% OF THE MAXIMUM DRY DENSITY AS DETERMINED BY ASTM D1557 AT MOISTURE CONTENT WITHIN MINUS 1% TO PLUS 2% OF THE OPTIMUM.

3. TANK'S SUBGRADE SHALL BE SLOPED AS PER MANUFACTURER'S RECOMMENDATION WITH A MINIMUM 75mm COMPACTED SAND CUSHION.

4. SEE FOUNDATION & CONCRETE NOTES ON SHEET SS–001.

5. BASE PLATE AND CONNECTIONS SHALL BE SIZED AND DETAILED BY THE TANK MANUFACTURER.

6. DESIGN BASED ON AN UNANCHORED TANK. IF TANK SELECTED IS TO BE ANCHORED, ENGINEER MUST BE NOTIFIED PRIOR TO CONSTRUCTION OF FOUNDATION.

0 .50 1.00
1:10
1 0 1 2 3 4
1:50

THESE DRAWINGS ARE "NOT APPROVED FOR CONSTRUCTION" SINCE THESE ARE BASED UPON ASSUMED CONDITIONS. THE CONTRACTOR SHALL NOT PROCEED WITH CONSTRUCTION UNTIL THE ASSUMED CONDITIONS ARE VALIDATED AND APPROVAL IS RECEIVED FROM THE CONTRACTING OFFICER.

COMMONWEALTH OF MASSACHUSETTS
QING ZHONG STRUCTURAL No. 46653
REGISTERED PROFESSIONAL ENGINEER
2/6/2012

UNLESS OTHERWISE NOTED, LINEAR DIMENSIONS SHOWN ARE IN MILLIMETERS.

DESIGN COMPLETE SUBMITTAL

SYMB	DESCRIPTION	DATE		
FNL	DESIGN COMPLETE SUBMITTAL	02–06–12	JZ	APR

DESIGNED BY: ALH
DATE: 02–06–2012
DRAWN BY: GRN
SUBMITTED BY: TETRA TECH
CHECKED BY: JZ
FILE NO.: AF1202––XS501DT

TETRA TECH

US Army Corps of Engineers Middle East District

COMMAND & CONTROL FACILITY
KANDAHAR AIR FIELD, AFGHANISTAN
SITE DESIGN
132,500 LITER WATER STORAGE FOUNDATION PLAN AND SECTION

SHEET REFERENCE NUMBER:
–
XS–501

W:\23308\127–23308–11004\CAD\MED Drawings\AF1202\Site Design\Structural\AF1202––XS501DT.dwg 3/7/2012 8:52:45 AM Jeffers, Scott

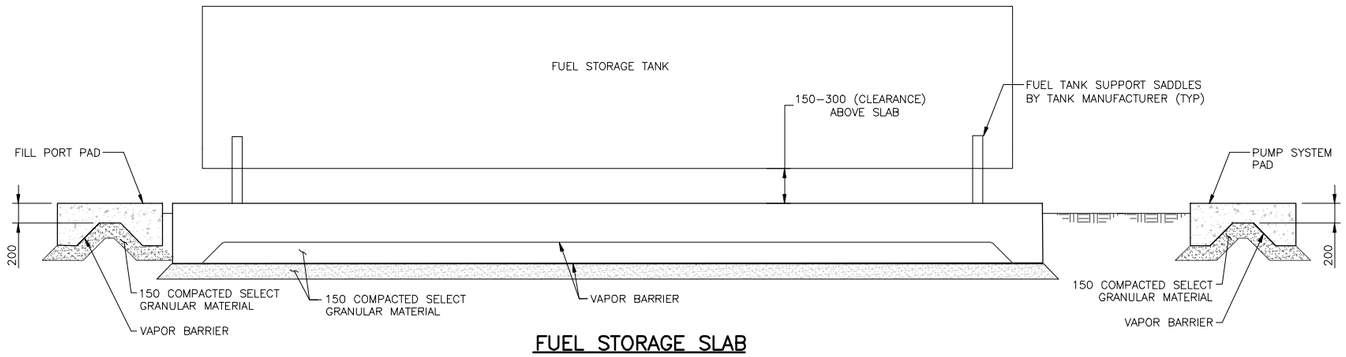

FUEL STORAGE SLAB ELEVATION
N.T.S.

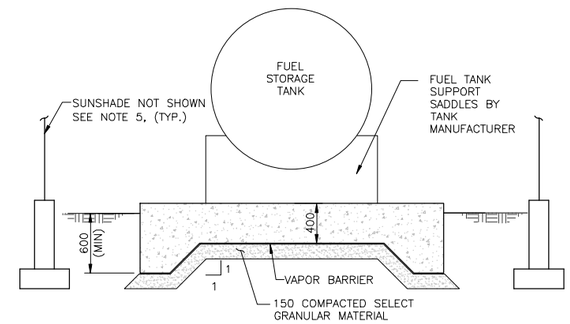

SECTION
N.T.S. XS–502 XS–502

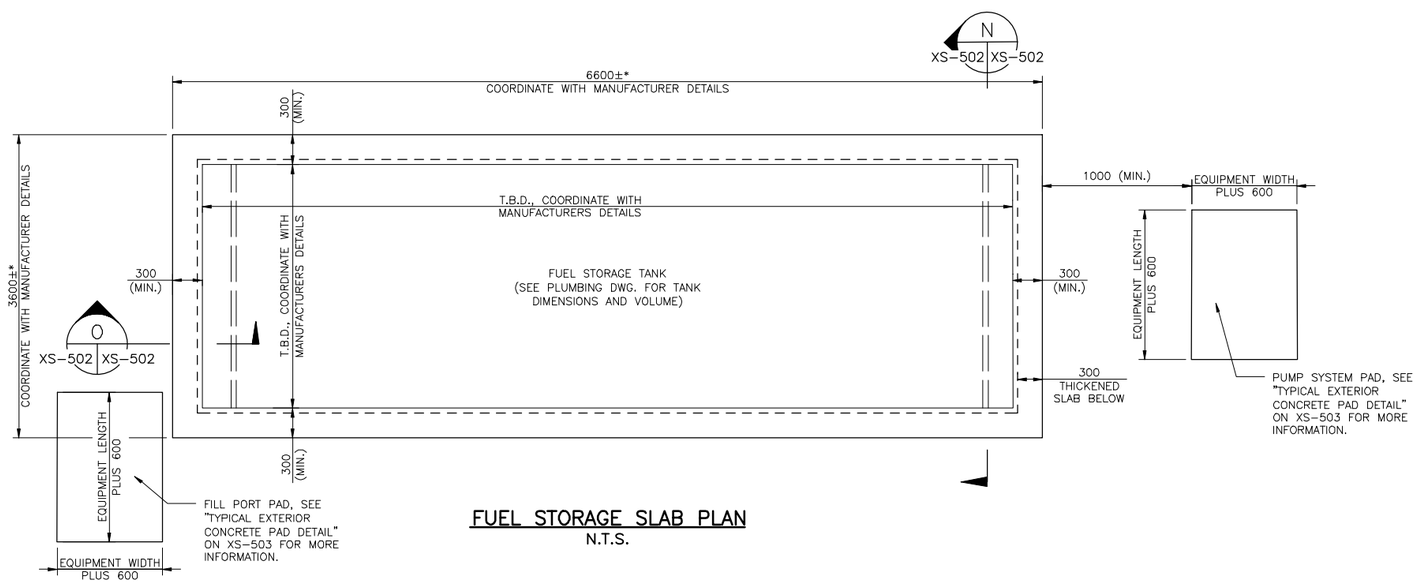

FUEL STORAGE SLAB PLAN
N.T.S.

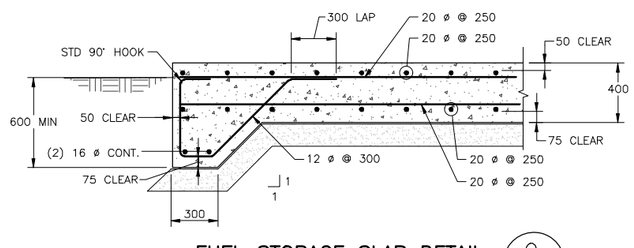

FUEL STORAGE SLAB DETAIL
N.T.S. XS–502 XS–502

NOTES:

1. CONTRACTOR MUST SUPPLY A CONCRETE FUEL SPILL CONTAINMENT WALL IF A DOUBLE WALL FUEL STORAGE TANK IN COMPLIANCE WITH UFC 3–460–01 IS NOT PROVIDED.
2. SEE GENERAL AND CONCRETE NOTES ON SHEET SS–001.
3. REFER TO PLUMBING DRAWINGS FOR ALL PIPING AND CONNECTIONS ASSOCIATED WITH FUEL STORAGE TANK.
4. FUEL STORAGE SLAB IS NOT DESIGNED TO SUPPORT FUEL STORAGE TANK SUNSHADE.
5. SEE PLUMBING DRAWINGS FOR MORE INFORMATION ON FUEL STORAGE TANK SUNSHADE. CONTRACTOR SHALL DESIGN SUNSHADE PER SPECIFICATIONS.
6. FUEL TANK SHALL BE ATTACHED TO THE FUEL STORAGE SLAB PER PLUMBING DRAWINGS, SPECIFICATIONS, AND MANUFACTURER'S RECOMMENDATIONS.
7. * INDICATES DIMENSIONS ARE BASED ON AN ASSUMED 37854 LITER (10000 GAL) FUEL STORAGE TANK WITH A WEIGHT OF 40800kg (TANK AND CONTENTS). ACTUAL DIMENSIONS AND WEIGHT TO BE VERIFIED.

THESE DRAWINGS ARE "NOT APPROVED FOR CONSTRUCTION" SINCE THESE ARE BASED UPON ASSUMED CONDITIONS. THE CONTRACTOR SHALL NOT PROCEED WITH CONSTRUCTION UNTIL THE ASSUMED CONDITIONS ARE VALIDATED AND APPROVAL IS RECEIVED FROM THE CONTRACTING OFFICER.

QING ZHONG STRUCTURAL No. 48653 REGISTERED PROFESSIONAL ENGINEER COMMONWEALTH OF MASSACHUSETTS

2/6/2012

UNLESS OTHERWISE NOTED, LINEAR DIMENSIONS SHOWN ARE IN MILLIMETERS.

DESIGN COMPLETE SUBMITTAL

SYMB	DESCRIPTION	DATE	APR
FNL	DESIGN COMPLETE SUBMITTAL	02–06–12	JZ

DESIGNED BY: ALH
DATE: 02–06–2012
DRAWN BY: GRN
SUBMITTED BY: TETRA TECH
CHECKED BY: JZ
FILE NO.: AF1202––XS502DT

TETRA TECH

US Army Corps of Engineers Middle East District

COMMAND & CONTROL FACILITY
KANDAHAR AIR FIELD, AFGHANISTAN
SITE DESIGN
FUEL STORAGE CONTAINMENT DETAILS

SHEET REFERENCE NUMBER:
–
XS–502

W:\23308\127–23308–11004\CAD\MED Drawings\AF1202\Site Design\Structural\AF1202––XS502DT.dwg 3/7/2012 8:54:40 AM Jeffers, Scott

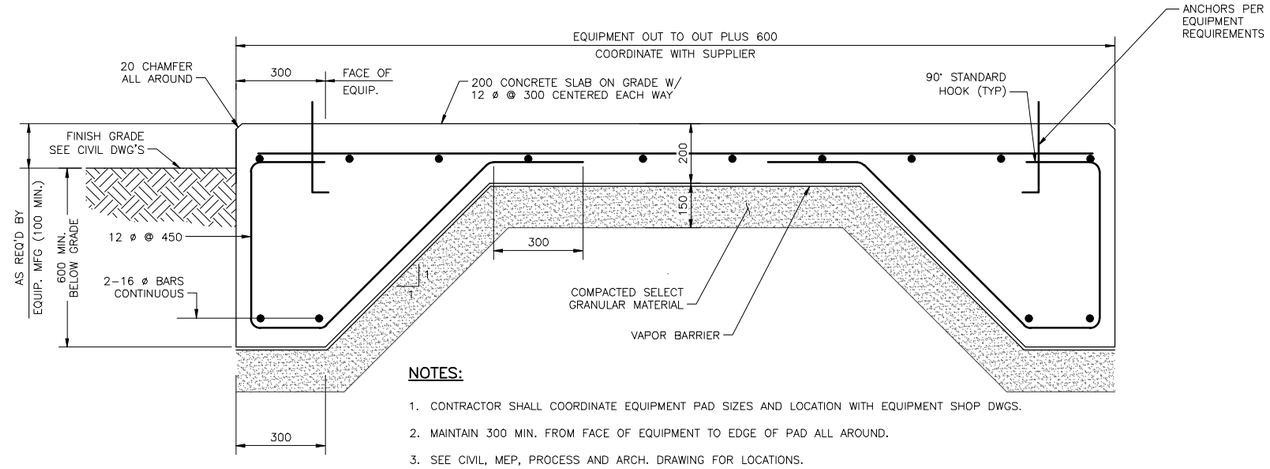

NOTES:

1. CONTRACTOR SHALL COORDINATE EQUIPMENT PAD SIZES AND LOCATION WITH EQUIPMENT SHOP DWGS.
2. MAINTAIN 300 MIN. FROM FACE OF EQUIPMENT TO EDGE OF PAD ALL AROUND.
3. SEE CIVIL, MEP, PROCESS AND ARCH. DRAWING FOR LOCATIONS.
4. THIS DETAIL SHALL BE USED FOR GENERATOR PAD, TRANSFORMER PAD, AND MISC. EXTERIOR CONCRETE PADS (U.N.O.).
5. CONCRETE PAD IS NOT DESIGNED TO SUPPORT SUNSHADE.

TYPICAL EXTERIOR CONCRETE PAD DETAIL

NOT TO SCALE

THESE DRAWINGS ARE "NOT APPROVED FOR CONSTRUCTION" SINCE THESE ARE BASED UPON ASSUMED CONDITIONS. THE CONTRACTOR SHALL NOT PROCEED WITH CONSTRUCTION UNTIL THE ASSUMED CONDITIONS ARE VALIDATED AND APPROVAL IS RECEIVED FROM THE CONTRACTING OFFICER.

COMMONWEALTH OF MASSACHUSETTS
QING ZHONG
STRUCTURAL
No. 48653
REGISTERED PROFESSIONAL ENGINEER

2/6/2012

UNLESS OTHERWISE NOTED, LINEAR DIMENSIONS SHOWN ARE IN MILLIMETERS.

DESIGN COMPLETE SUBMITTAL

SYMB	DESCRIPTION	DATE	APR
FNL	DESIGN COMPLETE SUBMITTAL	02-06-12	JZ

DESIGNED BY: ALH
DRAWN BY: GRN
CHECKED BY: JZ
DATE: 02-06-2012
SUBMITTED BY: TETRA TECH
FILE NO.: AF1202--XS5030T

TETRA TECH

US Army Corps of Engineers Middle East District

COMMAND & CONTROL FACILITY
KANDAHAR AIR FIELD, AFGHANISTAN
SITE DESIGN
EQUIPMENT SUPPORT
EXTERIOR CONCRETE PAD DETAIL

SHEET REFERENCE NUMBER:
–
XS-503

W:\23308\127-23308-11004\CAD\MED Drawings\AF1202\Site Design\Structural\AF1202--XS503DT.dwg 3/7/2012 8:56:28 AM Jeffers, Scott

GENERAL NOTES:

1. PROVIDE A NONCONDUCTIVE (PVC) BREAK AT ALL CONDUIT PENETRATIONS OF WALLS.

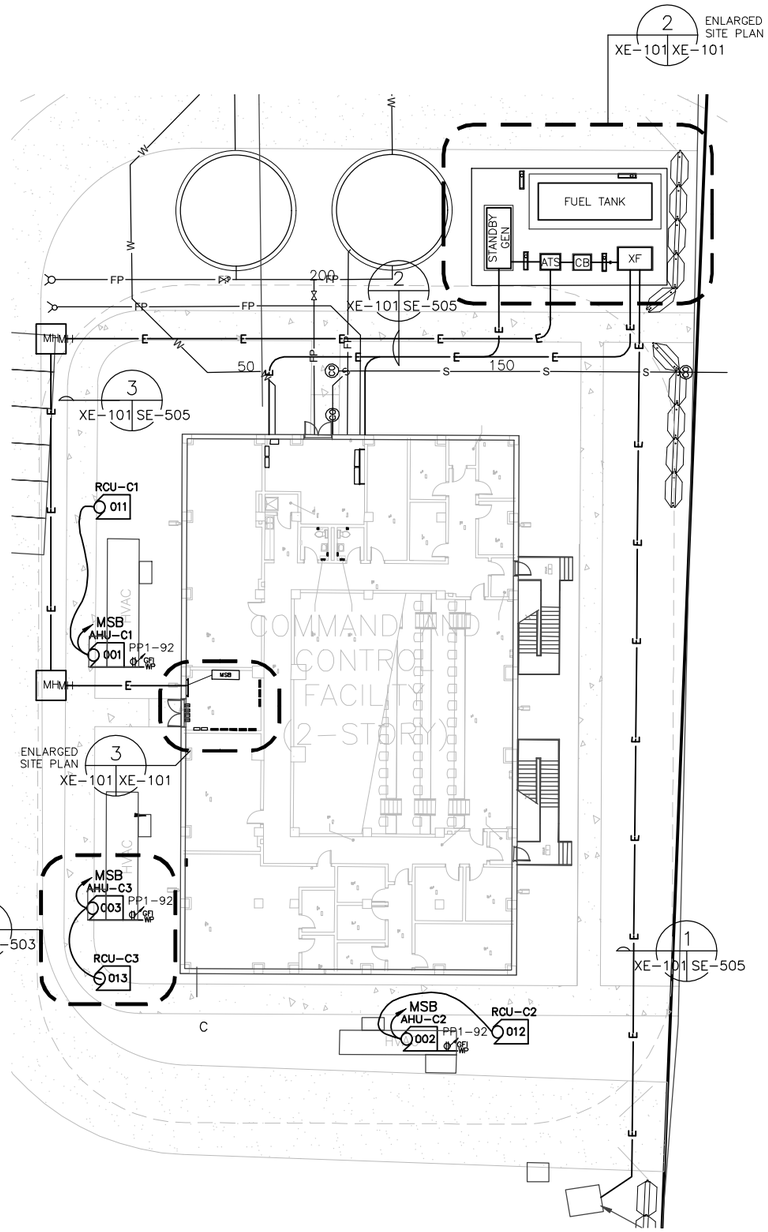

SITE PLAN 1 XE-101 XE-101
SCALE 1:100

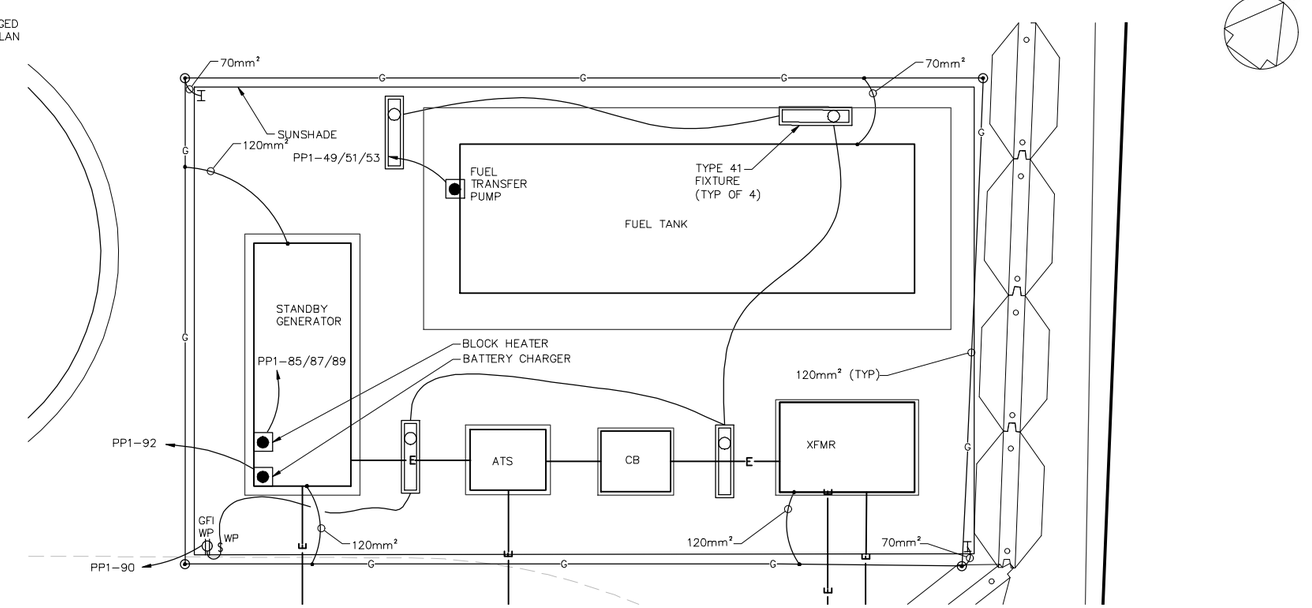

ENLARGED SITE PLAN 2 XE-101 XE-101
SCALE 1:100

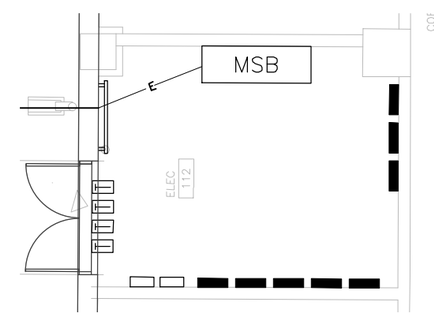

ENLARGED SITE PLAN 3 XE-101 XE-101
SCALE 1:100

1:200 5 0 5 10 15

1:100 1 0 1 2 3 4 5 6 7 8 9

THESE DRAWINGS ARE "NOT APPROVED FOR CONSTRUCTION" SINCE THESE ARE BASED UPON ASSUMED CONDITIONS. THE CONTRACTOR SHALL NOT PROCEED WITH CONSTRUCTION UNTIL THE ASSUMED CONDITIONS ARE VALIDATED AND APPROVAL IS RECEIVED FROM THE CONTRACTING OFFICER.

STATE OF NEW YORK · KEVIN CHARLES TERRY · 073083 · LICENSED PROFESSIONAL ENGINEER
2/6/2012

UNLESS OTHERWISE NOTED, LINEAR DIMENSIONS SHOWN ARE IN MILLIMETERS.

DESIGN COMPLETE SUBMITTAL

SYMB	DESCRIPTION	DATE	APR
FNL	DESIGN COMPLETE SUBMITTAL	02-06-12	KCT

DESIGNED BY: JAS
DATE: 02-06-2012
DRAWN BY: SES
SUBMITTED BY: TETRA TECH
CHECKED BY: RWR
FILE NO.: AF1202--XE101PN

TETRA TECH

US Army Corps of Engineers Middle East District

COMMAND & CONTROL FACILITY
KANDAHAR AIR FIELD, AFGHANISTAN
SITE DESIGN
COMMAND AND CONTROL FACILITY SITE PLAN

SHEET REFERENCE NUMBER:
C
XE-101

W:\23308\127-23308-11004\CAD\MED Drawings\AF1202\Site Design\Electrical\AF1202--XE101PN.dwg 3/7/2012 9:01:51 AM Jeffers, Scott

GENERAL NOTES:

1. PROVIDE A NONCONDUCTIVE (PVC) BREAK AT ALL CONDUIT PENETRATIONS OF WALLS.

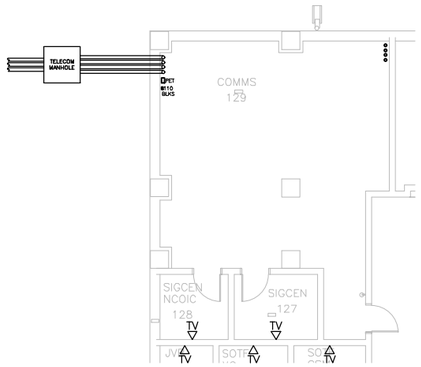

ENLARGED SITE PLAN (2 / XT-101 | XT-101)
SCALE 1:100

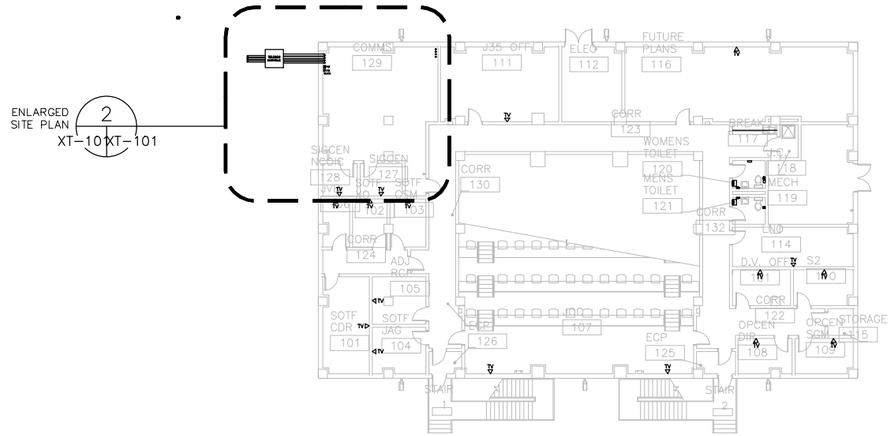

SITE PLAN (1 / XT-101 | XT-101)
SCALE 1:200

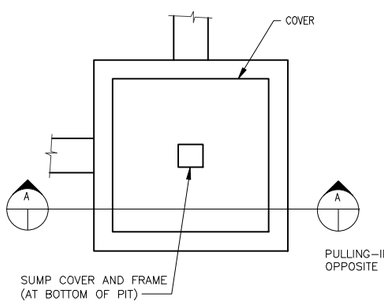

PLAN

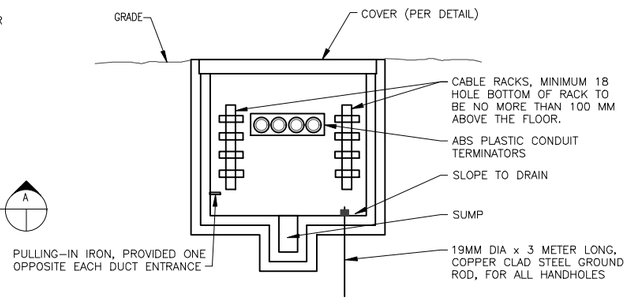

SECTION "A-A"

BONDING RIBBON TO BE INSTALLED AROUND THE PERIMETER OF THE HANDHOLE. MOUNTING HEIGHT TO BE DETERMINED BY THE DEPTH OF THE HANDHOLE GROUND CABLE FROM DUCT SYSTEM TO BE CONNECTED TO THE BONDING RIBBON IN THE HANDHOLE.

MINIMUM CONCRETE THICKNESS	
HANDHOLE WALLS TOP AND FLOOR	205mm

CONSTRUCTION REQUIREMENTS

MINIMUM REQUIREMENTS

TYPE	HEIGHT	LENGTH	WIDTH	SUMP DEPTH
CHH	NOTE 1	1.2m	1.2m	.25m

NOTE:
1. HEIGHT REQUIORED FOR MINIMUM CONDUIT DEPTHS INDICATED

MINIMUM REINFORCING

1. BARS WILL BE A MINIMUM OF 13 0 ROUND DEFORMED.
2. WALLS AND FLOOR WILL HAVE BARS AT 200mm MAXIMUM ON CENTERS WITH A MINIMUM 300 mm HOOK AT CORNERS AND INTERSECTIONS.
3. THE TOP SHALL HAVE BARS INSTALLED AS SHOWN AT A MINIMUM OF 50mm FROM THE OPENING AND WITH A MINIMUM 100mm SPACING BETWEEN BARS.

COMMUNICATION HANDHOLE DETAIL (CHH) (3 / VARIOUS | XT-101)
N.T.S.

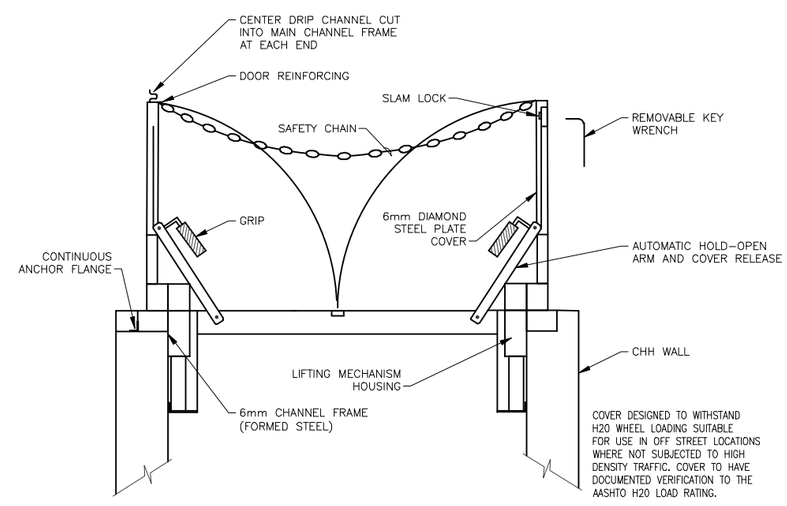

COVER DESIGNED TO WITHSTAND H20 WHEEL LOADING SUITABLE FOR USE IN OFF STREET LOCATIONS WHERE NOT SUBJECTED TO HIGH DENSITY TRAFFIC. COVER TO HAVE DOCUMENTED VERIFICATION TO THE AASHTO H20 LOAD RATING.

COMMUNICATION HANDHOLE COVER (CHH) (4 / VARIOUS | XT-101)
N.T.S.

5 0 5 10 15
1:200

1 0 1 2 3 4 5 6 7 8 9
1:100

THESE DRAWINGS ARE "NOT APPROVED FOR CONSTRUCTION" SINCE THESE ARE BASED UPON ASSUMED CONDITIONS. THE CONTRACTOR SHALL NOT PROCEED WITH CONSTRUCTION UNTIL THE ASSUMED CONDITIONS ARE VALIDATED AND APPROVAL IS RECEIVED FROM THE CONTRACTING OFFICER.

STATE OF NEW YORK · KEVIN CHARLES TERRY · 073092 · LICENSED PROFESSIONAL ENGINEER
2/6/2012

UNLESS OTHERWISE NOTED, LINEAR DIMENSIONS SHOWN ARE IN METERS.

DESIGN COMPLETE SUBMITTAL

STAB	DESCRIPTION	DATE	APR
FNL	DESIGN COMPLETE SUBMITTAL	02-06-12	KCT

DESIGNED BY: RPR
DRAWN BY: SES
CHECKED BY: RSM
DATE: 02-06-2012
SUBMITTED BY: TETRA TECH
FILE NO.: AF1202--XT101PN

TETRA TECH

US Army Corps of Engineers Middle East District

COMMAND & CONTROL FACILITY
KANDAHAR AIR FIELD, AFGHANISTAN
SITE DESIGN
COMMAND AND CONTROL FACILITY SITE PLAN

SHEET REFERENCE NUMBER:
–
XT-101

W:\23308\127-23308-11004\CAD\MED Drawings\AF1202\Site Design\Telecom\AF1202--XT101PN.dwg 3/7/2012 9:04:14 AM Jeffers, Scott

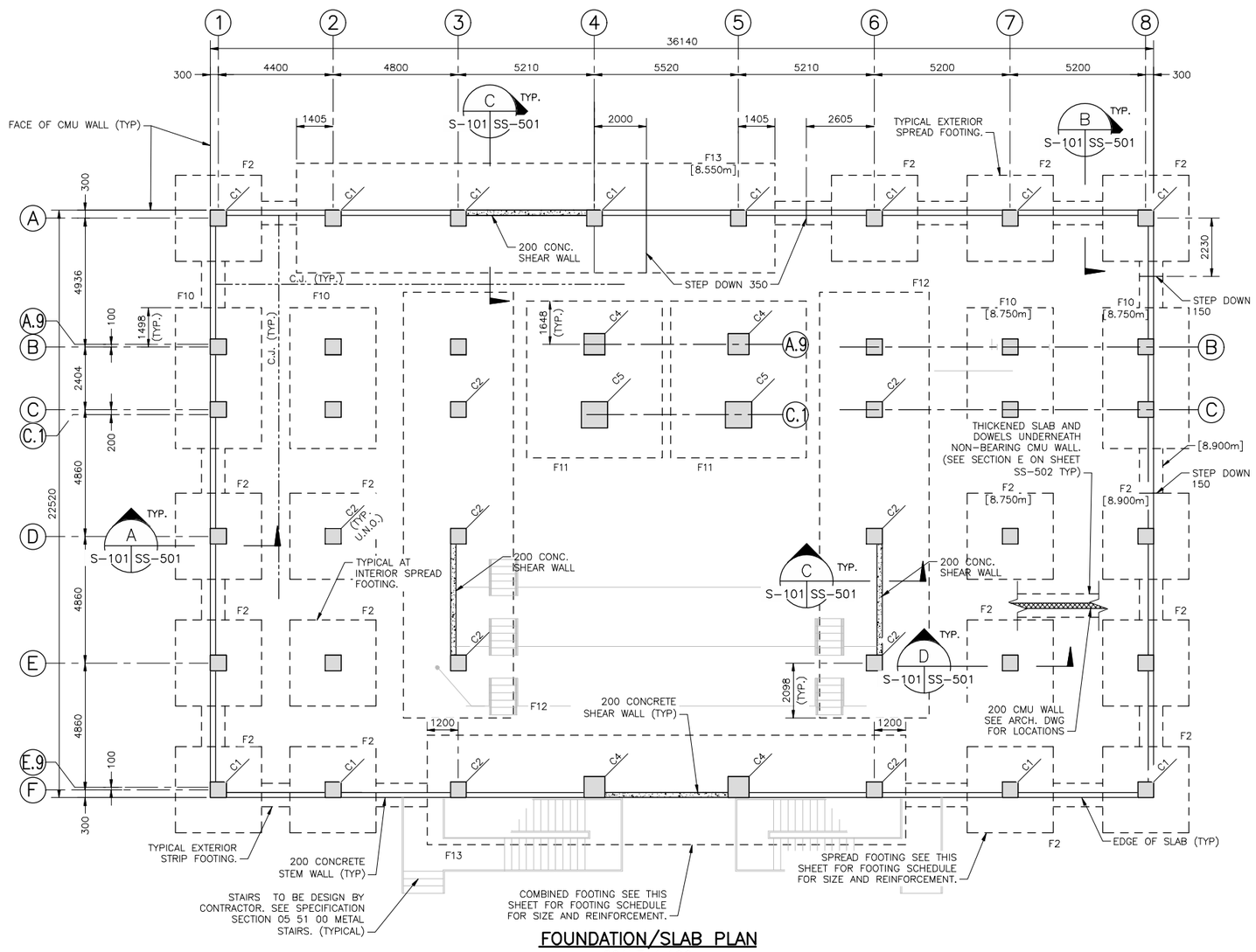

FOUNDATION/SLAB PLAN

SCALE 1:100

FOOTING SCHEDULE		
FOOTING TYPE	FOOTING SIZE	REINFORCING
F2 (SPREAD)	3300 x3300 x 600	TOP 20 ø @ 450 EACH WAY BOTTOM 13–20 EACH WAY
F10 (COMBINED)	3300 x 5400 x 600	TOP 8 – 16 ø LONGITUDINAL TOP 20 ø @ 450 TRANSVERSE BOTTOM 8 – 20 ø LONGITUDINAL BOTTOM 20 ø @ 250 TRANSVERSE
F11 (COMBINED)	5200 x 6000 x 600	TOP 15 – 20 ø LONGITUDINAL TOP 20 ø @ 450 TRANSVERSE BOTTOM 17 – 20 ø LONGITUDINAL BOTTOM 25 ø @ 300 TRANSVERSE
F12 (COMBINED)	4200 x 16320 x 600	TOP 16 – 25 ø LONGITUDINAL TOP 20 ø @ 450 TRANSVERSE BOTTOM 20 – 28 ø LONGITUDINAL BOTTOM 25 ø @ 300 TRANSVERSE
F13 (COMBINED)	4200 x 18340 x 600	TOP 23 – 20 ø LONGITUDINAL TOP 20 ø @ 450 TRANSVERSE BOTTOM 22 – 25 ø LONGITUDINAL BOTTOM 25 ø @ 300 TRANSVERSE

PLAN NOTES:

1. PROVIDE 150 CONCRETE SLAB ON GRADE, OVER 225 MINIMUM CAPILLARY WATER BARRIER WITH VAPOR BARRIER, REINFORCED WITH REBAR 12 ø @ 300 O.C. E.W. (TYP.). TOP OF SLAB EL. 10.000m. (REFER TO CIVIL DRAWINGS FOR ACTUAL ELEVATION).
2. [X.XXXm] DENOTES BOTTOM OF FOOTING ELEVATION. BOTTOM OF EXTERIOR STRIP FOOTING ELEVATION IS 9.050m U.N.O. BOTTOM OF EXTERIOR SPREAD & COMBINED FOOTING ELEV. IS 8.900m U.N.O. ON PLAN. BOTTOM OF INTERIOR FOOTING ELEVATION IS 9.100m U.N.O. ON PLANS.
3. COORDINATE LAYOUT AND DIMENSIONS WITH ARCHITECTURAL DRAWINGS.
4. PROVIDE CONTROL JOINTS (C.J.) AT 7000 O.C. MAX. OR AS INDICATED ON PLANS.
5. SEE ARCHITECTURAL DRAWINGS FOR LOCATIONS OF 200 NON–LOAD BEARING CMU WALL. PROVIDE THICKENED SLAB UNDERNEATH NON–LOAD BEARING CMU WALL. SEE DETAIL ON SHEET SS–502.
6. CMU CONTROL AND EXPANSION JOINT LOCATIONS ARE SHOWN ON THE ARCHITECTURAL DRAWINGS.
7. COORDINATE WITH MECHANICAL / PLUMBING DRAWINGS FOR STEPPED FOOTINGS AT SANITARY CONNECTIONS.
8. FOOTINGS ARE CENTERED ON THE COLUMNS LINES (U.N.O.).
9. FOR TYPICAL FOOTING STEP DETAIL SEE SS–502.
10. C# = DENOTES CONCRETE COLUMN TYPE. SEE SHEET SS–601 FOR COLUMN SCHEDULE.
11. SEE PLUMBING DRAWINGS FOR FLOOR DRAIN LOCATIONS.

LEGEND:

- INDICATES 200 CMU WALL
- INDICATES 200 CONCRETE SHEAR WALL
- INDICATES 200 CONCRETE STEM WALL

1 0 1 2 3 4 5 6 7 8 9
1:100

THESE DRAWINGS ARE "NOT APPROVED FOR CONSTRUCTION" SINCE THESE ARE BASED UPON ASSUMED CONDITIONS. THE CONTRACTOR SHALL NOT PROCEED WITH CONSTRUCTION UNTIL THE ASSUMED CONDITIONS ARE VALIDATED AND APPROVAL IS RECEIVED FROM THE CONTRACTING OFFICER.

COMMONWEALTH OF MASSACHUSETTS
QING ZHONG
STRUCTURAL
No. 46653
REGISTERED PROFESSIONAL ENGINEER
2/6/2012

UNLESS OTHERWISE NOTED, LINEAR DIMENSIONS SHOWN ARE IN MILLIMETERS.

DESIGN COMPLETE SUBMITTAL

SYMB	DESCRIPTION	DATE	APR
FNL	DESIGN COMPLETE SUBMITTAL	02–06–12	JZ

DESIGNED BY: RB
DRAWN BY: GRN
CHECKED BY: JZ
DATE: 02–06–2012
SUBMITTED BY: TETRA TECH
FILE NO.: AF1202A–S101PN

TETRA TECH

US Army Corps of Engineers
Middle East District

COMMAND & CONTROL FACILITY
KANDAHAR AIR FIELD, AFGHANISTAN
COMMAND & CONTROL FACILITY
FOUNDATION/SLAB PLAN

SHEET REFERENCE NUMBER:
A
S–101

W:\23308\127–23308–11004\CAD\MED Drawings\AF1202\AF1202A\Structural\AF1202A–S101PN.dwg 3/7/2012 9:06:40 AM Jeffers, Scott

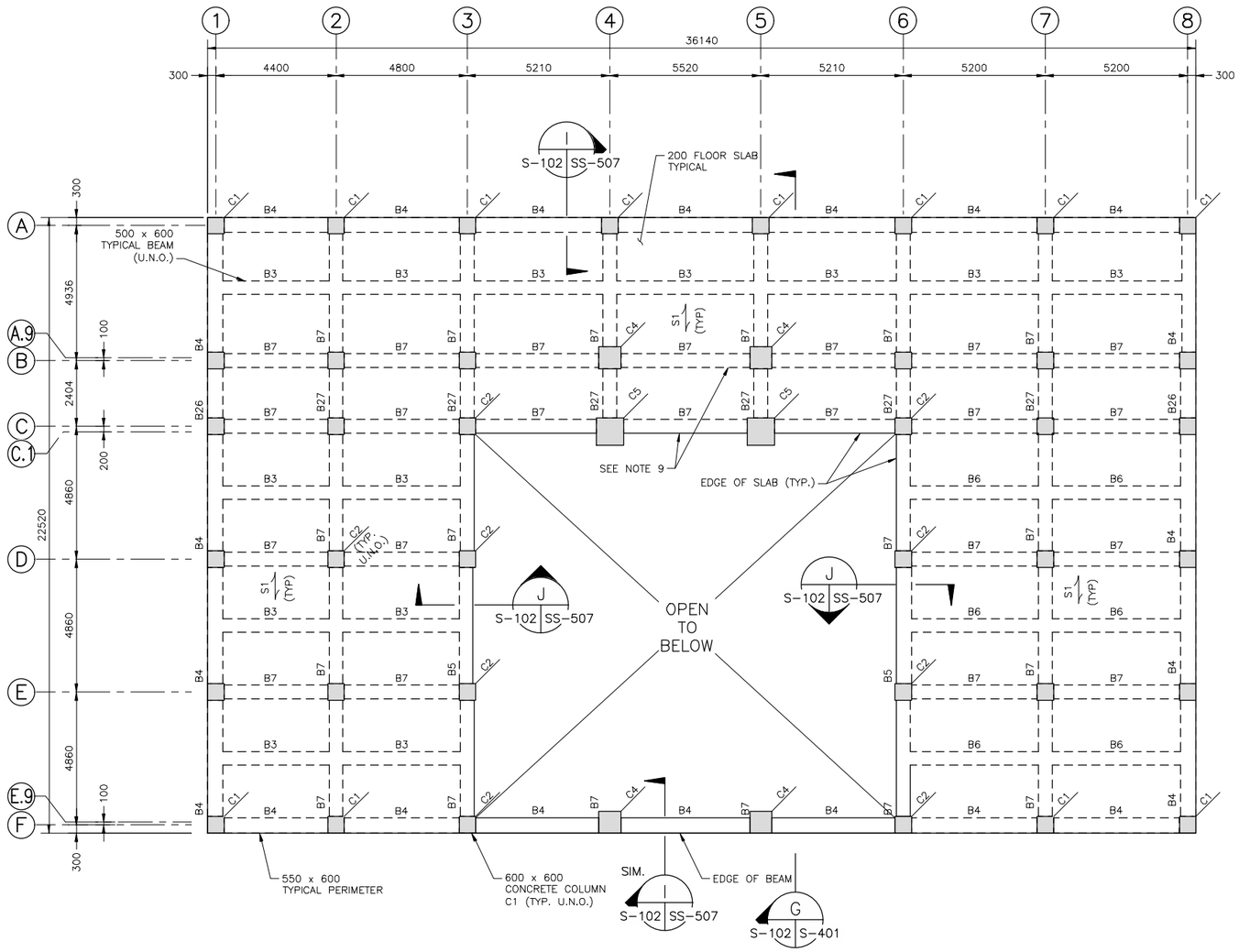

1st FLOOR FRAMING PLAN

SCALE 1:100

NOTE:
TOP OF SLAB ELEV. 14.800m

PLAN NOTES:

1. FLOOR SLAB CONSTRUCTION SHALL BE ONE WAY 200mm SLAB, DIRECTION OF SPAN AS INDICATED ON PLAN (S1). SEE REINFORCING NOTED ON SHEET SS-603.
2. SLAB PENETRATIONS SMALLER THAN 300mm ARE NOT INDICATED ON PLAN. ALL REQUIRED PENETRATIONS SHALL BE COORDINATED WITH ARCHITECTURAL AND MEP DRAWINGS.
3. REINFORCING PARALLEL TO SPAN SHALL BE CONTINUOUS THRU SUPPORT AND SPLICED AS NOTED. PROVIDE 180° HOOKS AT ALL DISCONTINUOUS ENDS.
4. SPLICE BAR AT BAR SPLICE LOCATIONS PER DETAIL ON SS-503. CONTINUOUS BARS CAN BE USED WITHOUT SPLICE IF PRACTICAL.
5. ALL SPLICES TO BE TENSION SPLICES PER SCHEDULE ON SHEET SS-001.
6. C# = DENOTES CONCRETE COLUMN TYPE. SEE SHEET SS-601 FOR COLUMN SCHEDULE.
7. B# = DENOTES CONCRETE BEAM TYPE. SEE SHEET SS-602 FOR BEAM SCHEDULE.
   B#F = DENOTES FRAME BEAM
   B#G = DENOTES GRAVITY BEAM
   TB# = DENOTES TAPPERED CONC. BEAM WITH FLAT BOTTOM AND SLOPED TOP. SEE SHEET S-401 FOR DETAILS.
8. SLAB REINFORCING SPLICE LOCATIONS:
   TOP BARS AT MID SPAN.
   BOTTOM BARS AT BEAM SUPPORT.
   SPLICE REINFORCING ONLY AS NEEDED.
9. ALL INTERIOR BEAMS ARE CENTERED ALONG GRID LINES U.N.O.. BEAMS ARE CENTERED ALONG GRID LINES B & C. U.N.O.. EXTERIOR BEAMS ARE LINING UP WITH EXTERIOR FACE OF CONCRETE COLUMNS.
10. 500 x 600 INDICATES 500 WIDE BY 600 DEEP BEAM.
11. TOP OF BEAM ELEVATIONS TO MATCH TOP OF SLAB ELEVATIONS.
12. SEE PLUMBING DRAWINGS FOR FLOOR DRAIN LOCATIONS.
13. SEE SS505 AND SS506 FOR CMU WALL REINFORCEMENT REQUIREMENT. FOR EXTERIOR CMU WALL, PROVIDE 16 ϕ @ 1200 O.C. VERTICAL REINFORCEMENT U.N.O. ALONG GRID LINE F, PROVIDE 16 ϕ @ 1000 VERTICAL REINFORCEMENT IN EXTERIOR CMU WALL.

1 0 1 2 3 4 5 6 7 8 9
1:100

THESE DRAWINGS ARE "NOT APPROVED FOR CONSTRUCTION" SINCE THESE ARE BASED UPON ASSUMED CONDITIONS. THE CONTRACTOR SHALL NOT PROCEED WITH CONSTRUCTION UNTIL THE ASSUMED CONDITIONS ARE VALIDATED AND APPROVAL IS RECEIVED FROM THE CONTRACTING OFFICER.

QING ZHONG. STRUCTURAL No. 48893 REGISTERED PROFESSIONAL ENGINEER COMMONWEALTH OF MASSACHUSETTS

2/6/2012

UNLESS OTHERWISE NOTED, LINEAR DIMENSIONS SHOWN ARE IN MILLIMETERS.

DESIGN COMPLETE SUBMITTAL

SYMB	DESCRIPTION	DATE	APR
FNL	DESIGN COMPLETE SUBMITTAL	02-06-12	JZ

DESIGNED BY: RB
DRAWN BY: GRN
CHECKED BY: JZ
DATE: 02-06-2012
SUBMITTED BY: TETRA TECH
FILE NO.: AF1202A-S102PN

TETRA TECH

US Army Corps of Engineers Middle East District

COMMAND & CONTROL FACILITY
KANDAHAR AIR FIELD, AFGHANISTAN
COMMAND & CONTROL FACILITY
1ST FLOOR FRAMING PLAN

SHEET REFERENCE NUMBER:
A
S-102

W:\23308\127-23308-11004\CAD\MED Drawings\AF1202\AF1202A\Structural\AF1202A-S102PN.dwg 3/7/2012 9:08:34 AM Jeffers, Scott

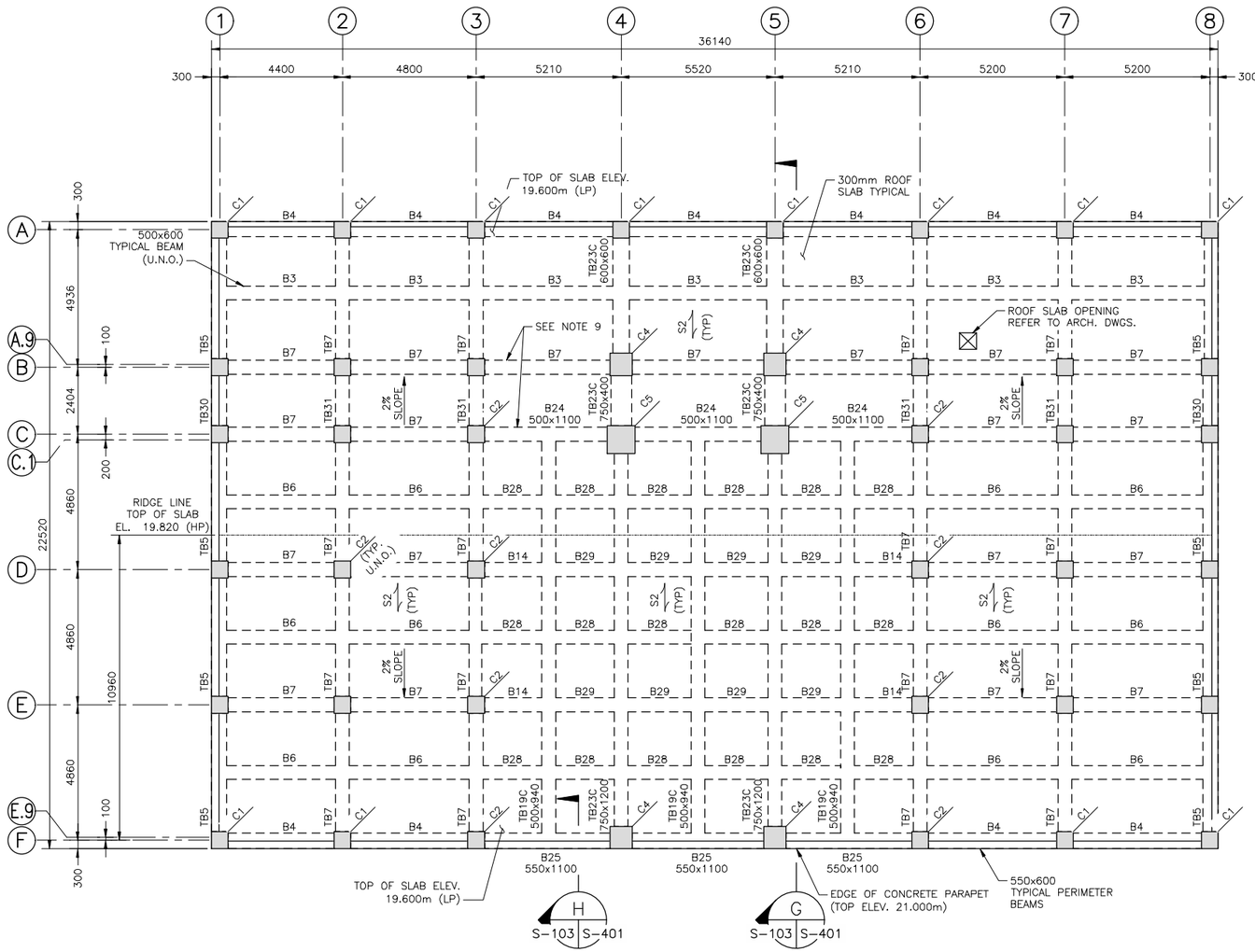

ROOF FRAMING PLAN

SCALE 1:100

PLAN NOTES:

1. ROOF SLAB CONSTRUCTION SHALL BE ONE WAY 300mm SLAB, DIRECTION OF SPAN AS INDICATED ON PLAN (S2). SEE REINFORCING NOTED ON SHEET SS-603.
2. SLAB PENETRATIONS SMALLER THAN 300MM ARE NOT INDICATED ON PLAN. ALL REQUIRED PENETRATIONS SHALL BE COORDINATED WITH ARCHITECTURAL AND MEP DRAWINGS.
3. REINFORCING PARALLEL TO SPAN SHALL BE CONTINUOUS THRU SUPPORT AND SPLICED AS NOTED. PROVIDE 180' HOOKS AT ALL DISCONTINUOUS ENDS.
4. SPLICE BAR AT BAR SPLICE LOCATIONS PER DETAIL ON SS-503. CONTINUOUS BARS CAN BE USED WITHOUT SPLICE IF PRACTICAL.
5. ALL SPLICES TO BE TENSION SPLICES PER SCHEDULE ON SHEET SS-001.
6. C# = DENOTES CONCRETE COLUMN TYPE. SEE SHEET SS-601 FOR COLUMN SCHEDULE.
7. B# = DENOTES CONCRETE BEAM TYPE. SEE SHEET SS-602 FOR BEAM SCHEDULE.
   B#F = DENOTES FRAME BEAM
   B#G = DENOTES GRAVITY BEAM
   TB# = DENOTES TAPPERED CONC. BEAM WITH FLAT BOTTOM AND SLOPED TOP. SEE SHEET S-401 FOR DETAILS.
8. SLAB REINFORCING SPLICE LOCATIONS:
   TOP BARS AT MID SPAN.
   BOTTOM BARS AT BEAM SUPPORT.
   SPLICE REINFORCING ONLY AS NEEDED.
9. ALL INTERIOR BEAMS ARE CENTERED ALONG GRID LINES U.N.O.. BEAMS ARE CENTERED ALONG GRID LINES B & C. U.N.O.. EXTERIOR BEAMS ARE LINING UP WITH EXTERIOR FACE OF CONCRETE COLUMNS.
10. 500 x 600 INDICATES 500 WIDE BY 600 DEEP BEAM. FOR TAPERED BEAM TB#. DEPTH SHOWN IS FOR SHALLOW END OF THE BEAM.
11. TOP OF BEAM ELEVATIONS TO MATCH TOP OF SLAB ELEVATIONS.

1 0 1 2 3 4 5 6 7 8 9
1:100

THESE DRAWINGS ARE "NOT APPROVED FOR CONSTRUCTION" SINCE THESE ARE BASED UPON ASSUMED CONDITIONS. THE CONTRACTOR SHALL NOT PROCEED WITH CONSTRUCTION UNTIL THE ASSUMED CONDITIONS ARE VALIDATED AND APPROVAL IS RECEIVED FROM THE CONTRACTING OFFICER.

QING ZHONG. STRUCTURAL No. 46653 REGISTERED PROFESSIONAL ENGINEER
2/6/2012

UNLESS OTHERWISE NOTED, LINEAR DIMENSIONS SHOWN ARE IN MILLIMETERS.

DESIGN COMPLETE SUBMITTAL

FNL	DESIGN COMPLETE SUBMITTAL	02-06-12	JZ
SYMB	DESCRIPTION	DATE	APR

DESIGNED BY: RB
DATE: 02-06-2012
DRAWN BY: GRN
SUBMITTED BY: TETRA TECH
CHECKED BY: JZ
FILE NO.: AF1202A-S103PN

TETRA TECH

US Army Corps of Engineers Middle East District

COMMAND & CONTROL FACILITY
KANDAHAR AIR FIELD, AFGHANISTAN
COMMAND & CONTROL FACILITY
ROOF FRAMING PLAN

SHEET REFERENCE NUMBER:
A
S-103

W:\23308\127-23308-11004\CAD\MED Drawings\AF1202\AF1202A\Structural\AF1202A-S103PN.dwg 3/7/2012 9:10:25 AM Jeffers, Scott

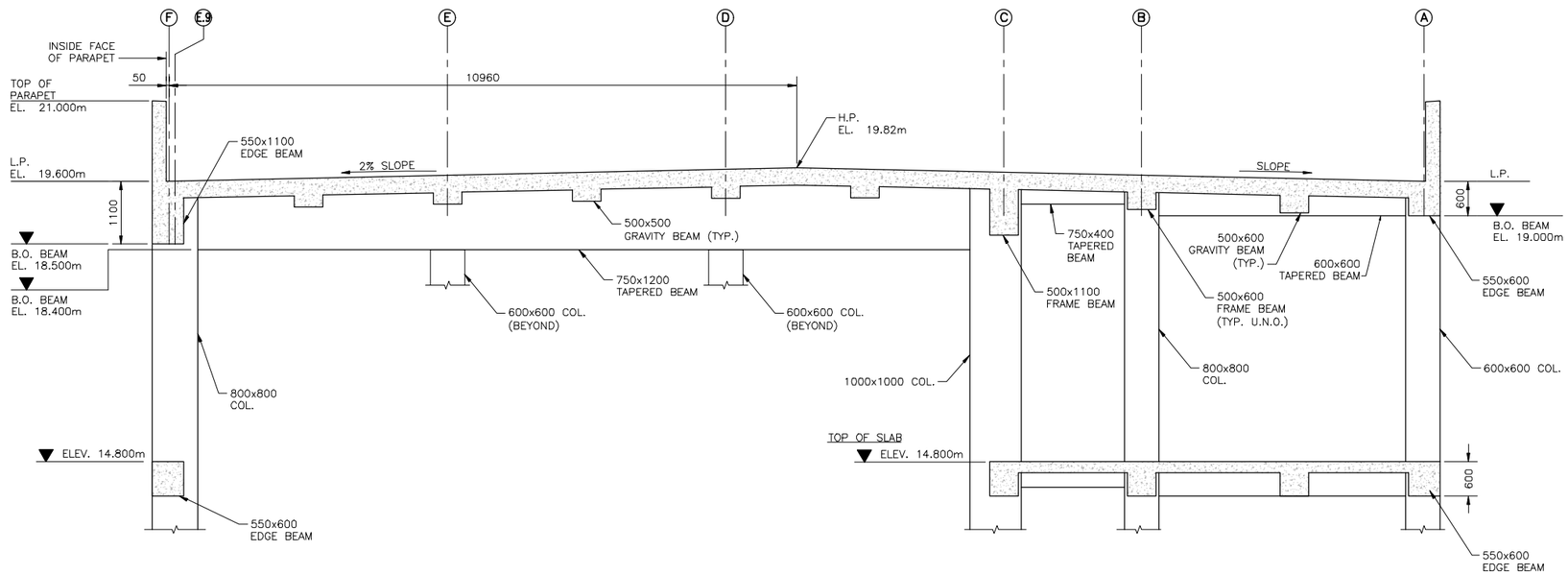

SECTION AT GRID ⑤ (G)
SCALE 1:50 S-102, S-103 | S-401

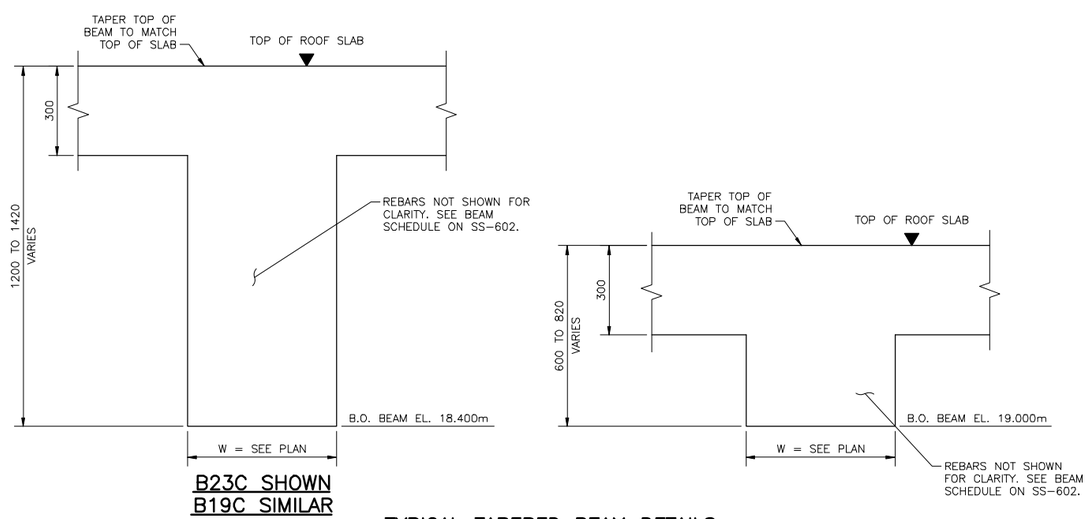

B23C SHOWN
B19C SIMILAR

TYPICAL TAPERED BEAM DETAILS
SCALE 1:10

NOTE:
FOR ADDITIONAL CONCRETE BEAM REINFORCEMENT INFORMATION SEE SHEET SS-602 CONCRETE BEAM SCHEDULE.

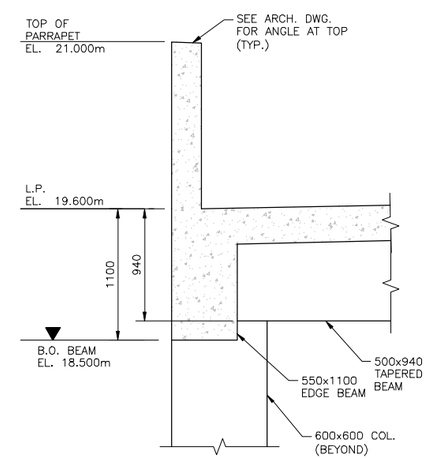

TYPICAL TAPERED BEAM DETAILS (H)
SCALE 1:25 S-103 | S-401

1:10 0 .50 1.00
1:25 1 .50 0 1 1.5
1:50 1 0 1 2 3 4

THESE DRAWINGS ARE "NOT APPROVED FOR CONSTRUCTION" SINCE THESE ARE BASED UPON ASSUMED CONDITIONS. THE CONTRACTOR SHALL NOT PROCEED WITH CONSTRUCTION UNTIL THE ASSUMED CONDITIONS ARE VALIDATED AND APPROVAL IS RECEIVED FROM THE CONTRACTING OFFICER.

QING ZHONG. STRUCTURAL No. 46653 REGISTERED PROFESSIONAL ENGINEER
2/6/2012

UNLESS OTHERWISE NOTED, LINEAR DIMENSIONS SHOWN ARE IN MILLIMETERS.

DESIGN COMPLETE SUBMITTAL

SYMB	DESCRIPTION	DATE	APR
FNL	DESIGN COMPLETE SUBMITTAL	02-06-12	JZ

DESIGNED BY: RB
DRAWN BY: GRN
CHECKED BY: JZ
DATE: 02-06-2012
SUBMITTED BY: TETRA TECH
FILE NO.: AF1202A-S401LS

TETRA TECH

US Army Corps of Engineers Middle East District

COMMAND & CONTROL FACILITY
KANDAHAR AIR FIELD, AFGHANISTAN
COMMAND CONTROL FACILITY
BUILDING SECTION AND DETAILS

SHEET REFERENCE NUMBER:
A
S-401

W:\23308\127-23308-11004\CAD\MED Drawings\AF1202\AF1202A\Structural\AF1202A-S401LS.dwg 3/7/2012 9:12:00 AM Jeffers, Scott

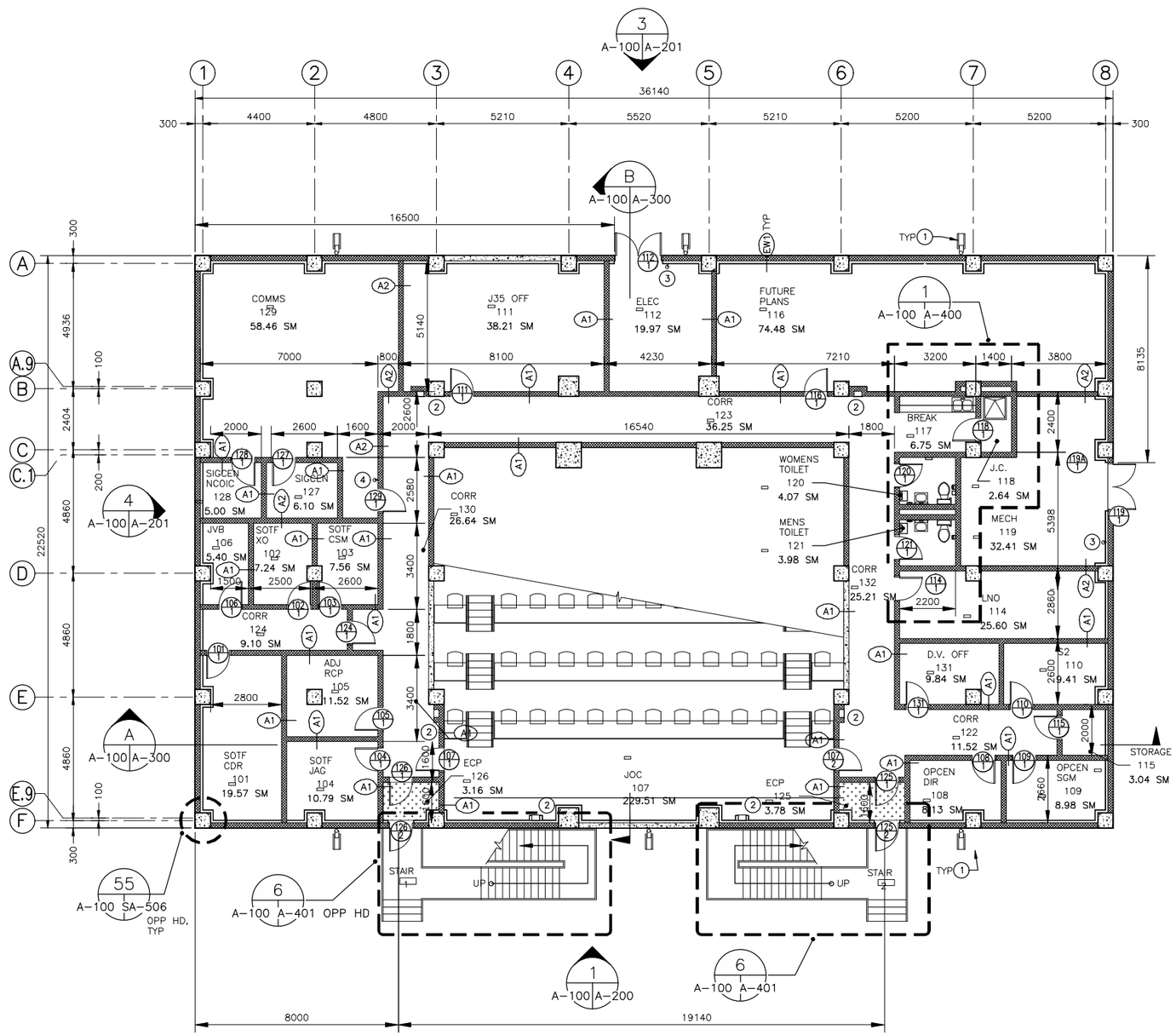

GROUND FLOOR PLAN
SCALE 1:100

GENERAL NOTES:

1. UNO, ALL MASONRY/ROUGH OPENINGS FOR DOORS ARE 200mm FROM FACE OF MASONRY.
2. REFER TO DRAWING SA-500 FOR WALL TYPE AND PARTITION TYPE DETAILS.
3. REFER TO LIFE SAFETY PLANS FOR FIRE RATINGS
4. REFER TO MECH, PLUMB, FP, FA, ELEC, AND TC DWGS FOR PENETRATION LOCATIONS. SEE SM-502 AND SM-503 FOR DUCT PENETRATION DETAILS.

SPECIFIC NOTES:

1. SPLASH BLOCK. SEE DETAIL 15/SA-501.
2. FIRE EXTINGUISHER CABINET WITH 6.8 KILOGRAM, "ABC" TYPE FIRE EXTINGUISHER – REFER TO SECTION 10 44 16.
3. 6.8 KILOGRAM "ABC" TYPE FIRE EXTINGUISHER ON WALL HOOK – REFER TO SECTION 10 44 16.
4. 6.8 KILOGRAM "CLEAN AGENT" TYPE FIRE EXTINGUISHER ON WALL HOOK REFER TO SECTION 10 44 16.

AREA OF FLOOR MAT

GROUND FLOOR AREA:	806.85 SM
1/2 AREA OF EXTERIOR STAIRS:	15.52
GROUND FLOOR GROSS SM:	821.37 SM
FIRST FLOOR GROSS SM:	577.34 SM
BUILDING GROSS SM:	1398.61 SM

(AREAS CALCULATED PER TI-800-01)

1:100

THESE DRAWINGS ARE "NOT APPROVED FOR CONSTRUCTION" SINCE THESE ARE BASED UPON ASSUMED CONDITIONS. THE CONTRACTOR SHALL NOT PROCEED WITH CONSTRUCTION UNTIL THE ASSUMED CONDITIONS ARE VALIDATED AND APPROVAL IS RECEIVED FROM THE CONTRACTING OFFICER.

REGISTERED ARCHITECT STATE OF NEW YORK

2/6/2012

UNLESS OTHERWISE NOTED, LINEAR DIMENSIONS SHOWN ARE IN MILLIMETERS.

DESIGN COMPLETE SUBMITTAL

SYMB	DESCRIPTION	DATE	APR
FNL	DESIGN COMPLETE SUBMITTAL	02-06-12	WESR

DESIGNED BY: PTO
DATE: 02-06-2012
DRAWN BY: NLW
SUBMITTED BY: TETRA TECH
CHECKED BY: KCB
FILE NO.: AF1202A-A100PN

TETRA TECH

US Army Corps of Engineers Middle East District

COMMAND & CONTROL FACILITY
KANDAHAR AIR FIELD, AFGHANISTAN
COMMAND & CONTROL FACILITY
GROUND FLOOR PLAN

SHEET REFERENCE NUMBER:
A
A-100

W:\23308\127-23308-11004\CAD\MED Drawings\AF1202\AF1202A\Architectural\AF1202A-A100PN.dwg 3/7/2012 9:13:25 AM Jeffers, Scott

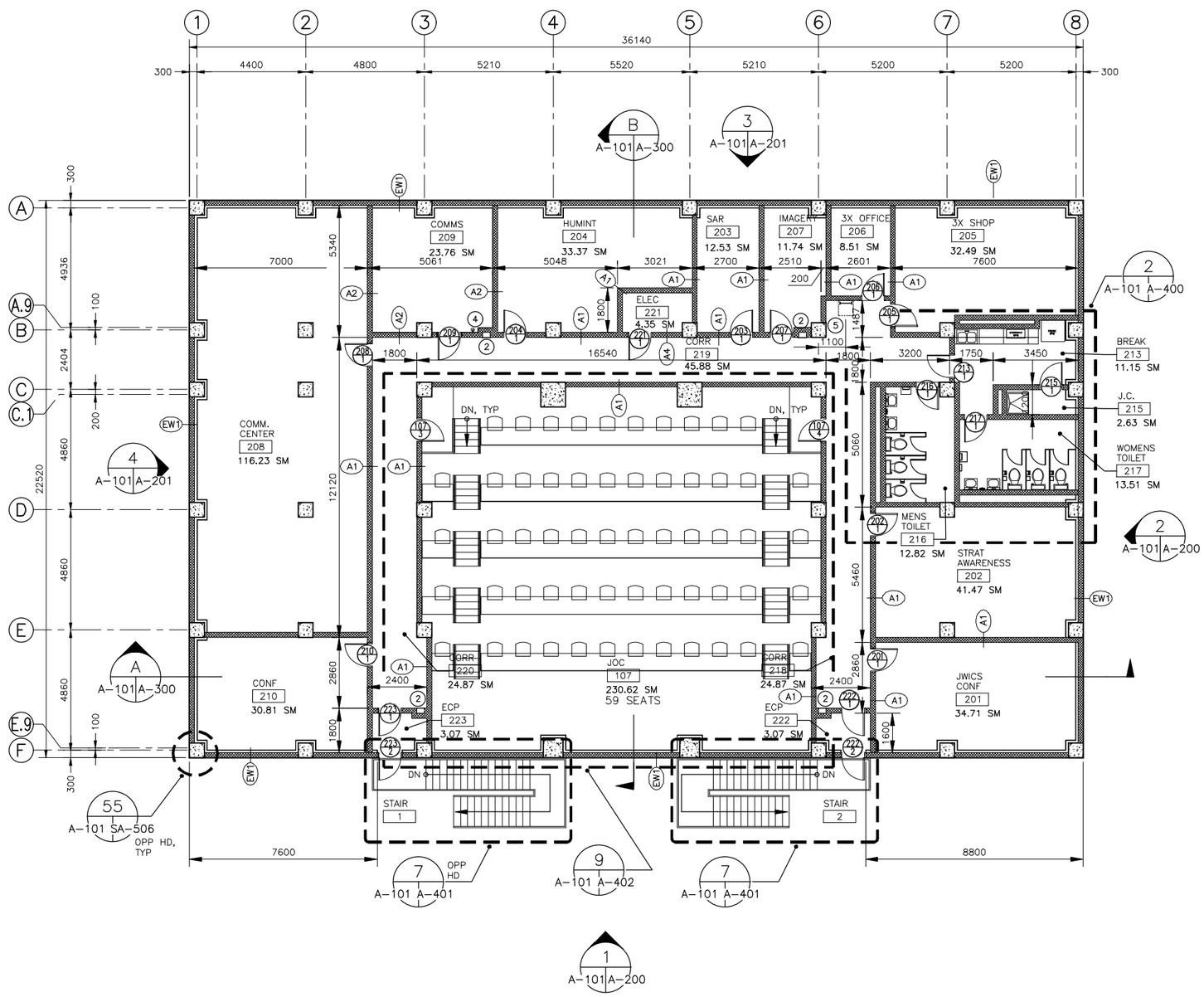

FIRST FLOOR PLAN
SCALE 1:100

GENERAL NOTES:

1. UNO, ALL MASONRY/ROUGH OPENINGS FOR DOORS ARE 200mm FROM FACE OF MASONRY.
2. REFER TO DRAWING SA-500 FOR WALL TYPE AND PARTITION TYPE DETAILS.
3. REFER TO LIFE SAFETY PLANS FOR FIRE RATINGS
4. REFER TO MECH, PLUMB, FP, FA, ELEC, AND TC DWGS FOR PENETRATION LOCATIONS. SEE SM-502 AND SM-503 FOR DUCT PENETRATION DETAILS.

SPECIFIC NOTES:

1. SPLASH BLOCK. SEE DETAIL 15/A-501.
2. FIRE EXTINGUISHER CABINET WITH 6.8 KILOGRAM, "ABC" TYPE FIRE EXTINGUISHER – REFER TO SECTION 10 44 16.
3. 6.8 KILOGRAM "ABC" TYPE FIRE EXTINGUISHER ON WALL HOOK – REFER TO SECTION 10 44 16.
4. 6.8 KILOGRAM "CLEAN AGENT" TYPE FIRE EXTINGUISHER ON WALL HOOK REFER TO SECTION 10 44 16.
5. ROOF ACCESS LADDER, SEE DETAIL 18/SA-502.

FIRST FLOOR GROSS SM:	577.34 SM
(AREAS CALCULATED PER TI-800-01)	

1:100

THESE DRAWINGS ARE "NOT APPROVED FOR CONSTRUCTION" SINCE THESE ARE BASED UPON ASSUMED CONDITIONS. THE CONTRACTOR SHALL NOT PROCEED WITH CONSTRUCTION UNTIL THE ASSUMED CONDITIONS ARE VALIDATED AND APPROVAL IS RECEIVED FROM THE CONTRACTING OFFICER.

REGISTERED ARCHITECT HENRY ELIZABETH STEPHANOPOULOS STATE OF NEW YORK

2/6/2012

UNLESS OTHERWISE NOTED, LINEAR DIMENSIONS SHOWN ARE IN MILLIMETERS.

DESIGN COMPLETE SUBMITTAL

SYMB	DESCRIPTION	DATE	APR
FNL	DESIGN COMPLETE SUBMITTAL	02-06-12	WESR

DESIGNED BY: PTO
DATE: 02-06-2012
DRAWN BY: NLW
SUBMITTED BY: TETRA TECH
CHECKED BY: KCB
FILE NO.: AF1202A-A101PN

TETRA TECH

US Army Corps of Engineers Middle East District

COMMAND & CONTROL FACILITY
KANDAHAR AIR FIELD, AFGHANISTAN
COMMAND & CONTROL FACILITY
FIRST FLOOR PLAN

SHEET REFERENCE NUMBER:
A
A-101

W:\23308\127-23308-11004\CAD\MED Drawings\AF1202\AF1202A\Architectural\AF1202A-A101PN.dwg 3/7/2012 9:14:05 AM Jeffers, Scott

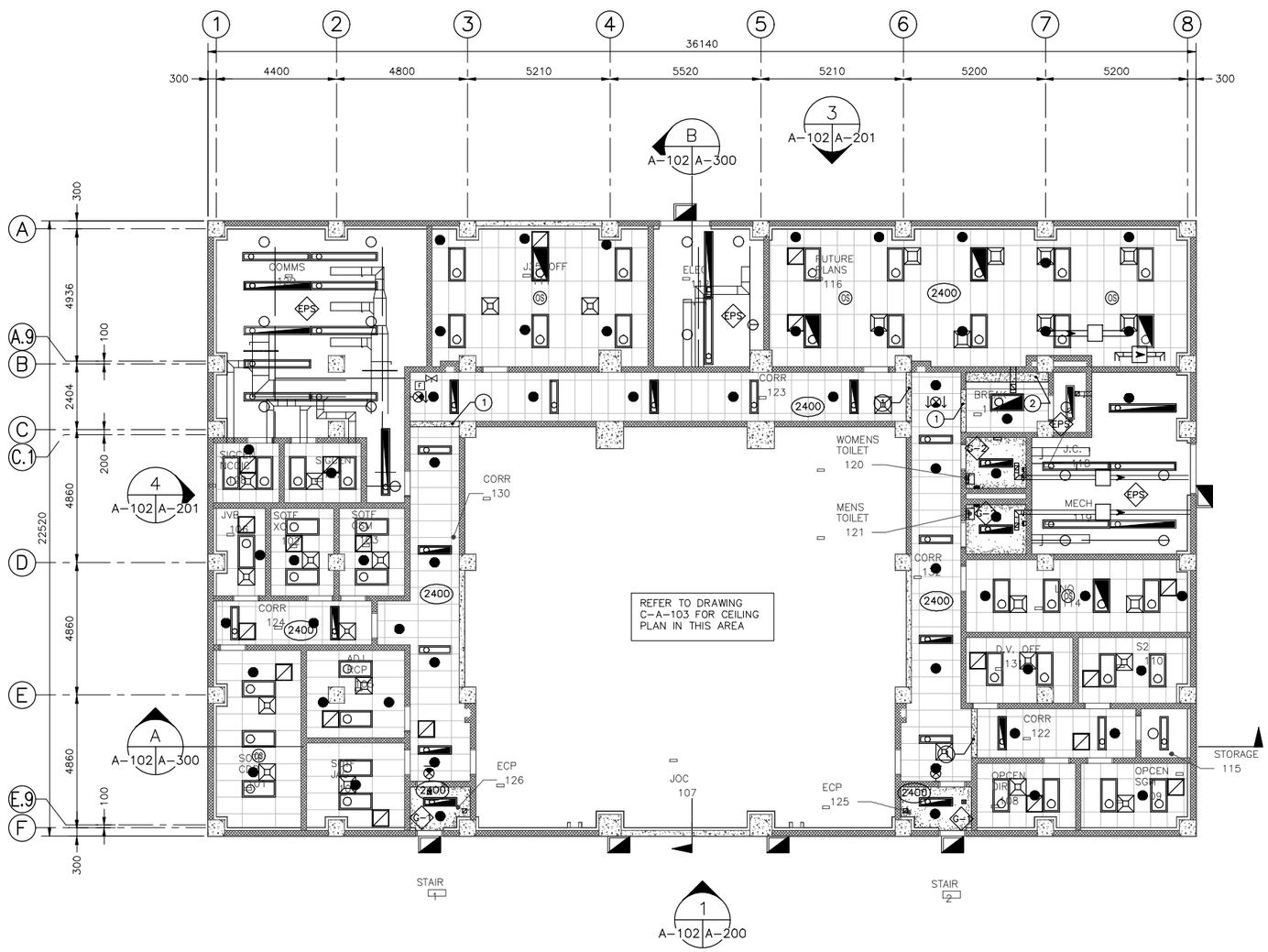

GENERAL NOTES:

1. UNLESS NOTED OTHERWISE ALL CEILING SYSTEMS ARE TO BE TYPE A1
2. UNLESS NOTED OTHERWISE ALL CEILINGS ARE TO BE MOUNTED 2700mm ABOVE THE FINISHED FLOOR.

SPECIFIC NOTES:

1. GYPSUM BOARD SOFFIT REFER TO DETAIL 47/SA-506.
2. GYPSUM BOARD ROOF ACCESS SOFFIT REFER TO DETAIL 19/SA-502.

GROUND FLOOR PLAN

SCALE 1:100

CEILING LEGEND

- CEILING-MOUNTED OCCUPANCY SENSOR
- EXIT LIGHT
- LIGHT FIXTURES, SEE ELEC.
- EMERGENCY LIGHT FIXTURES, SEE ELEC.
- EXTERIOR LIGHT FIXTURE, SEE ELEC.
- RETURN GRILLE, SEE MECH.
- CEILING DIFFUSER, SEE MECH.
- DUCTWORK SEE MECH.
- SPRINKLER SYSTEM, SEE FP. DWGS
- EPS EXPOSED STRUCTURE, FACTORY PRIMED
- A-1 600mm X 1200mm LAY-IN CEILING SYSTEM RE: TO SECTION 09 51 00
- C-1 SUSPENDED GYPSUM BOARD CEILING SYSTEM - PAINTED REFER TO SECTION 09 51 00
- C-2 SUSPENDED WATER RESISTANT GYPSUM BOARD CEILING SYSTEM - PAINTED REFER TO SECTION 09 51 00
- XXXX HEIGHT TO UNDERSIDE OF CEILING FROM FINISHED FLOOR

1:100

THESE DRAWINGS ARE "NOT APPROVED FOR CONSTRUCTION" SINCE THESE ARE BASED UPON ASSUMED CONDITIONS. THE CONTRACTOR SHALL NOT PROCEED WITH CONSTRUCTION UNTIL THE ASSUMED CONDITIONS ARE VALIDATED AND APPROVAL IS RECEIVED FROM THE CONTRACTING OFFICER.

REGISTERED ARCHITECT — STATE OF NEW YORK

2/6/2012

UNLESS OTHERWISE NOTED, LINEAR DIMENSIONS SHOWN ARE IN MILLIMETERS.

DESIGN COMPLETE SUBMITTAL

SYMB	DESCRIPTION	DATE	APR
FNL	DESIGN COMPLETE SUBMITTAL	02-06-12	WESR

DESIGNED BY: PTO
DATE: 02-06-2012
DRAWN BY: NLW
SUBMITTED BY: TETRA TECH
CHECKED BY: KCB
FILE NO.: AF1202A-A102PN

TETRA TECH

US Army Corps of Engineers Middle East District

COMMAND & CONTROL FACILITY
KANDAHAR AIR FIELD, AFGHANISTAN
COMMAND & CONTROL FACILITY
GROUND FLOOR
REFLECTED CEILING PLAN

SHEET REFERENCE NUMBER:
A
A-102

W:\23308\127-23308-11004\CAD\MED Drawings\AF1202\AF1202A\Architectural\AF1202A-A102PN.dwg 3/7/2012 9:15:14 AM Jeffers, Scott

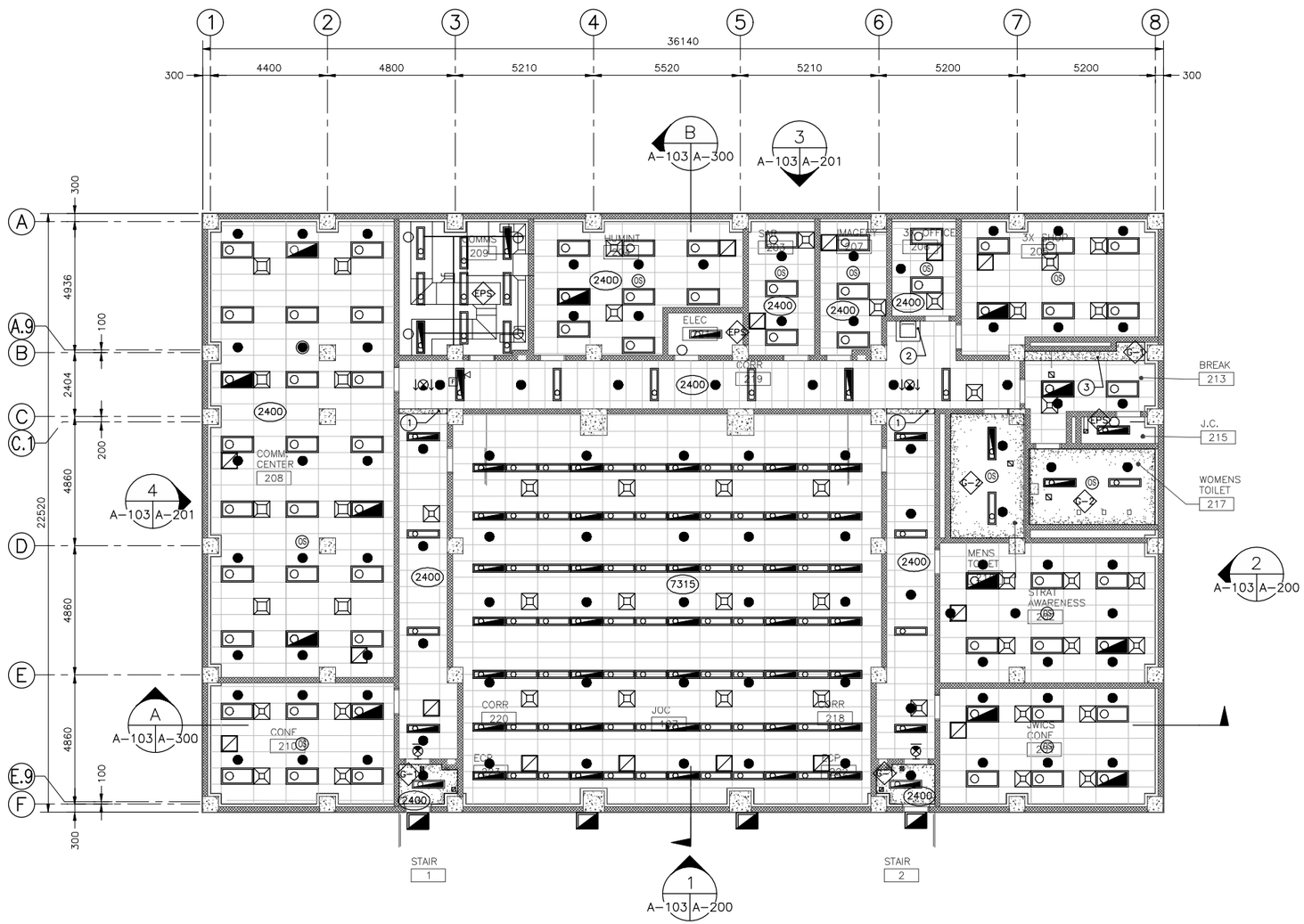

FIRST FLOOR PLAN

SCALE 1:100

GENERAL NOTES:

1. UNLESS NOTED OTHERWISE ALL CEILING SYSTEMS ARE TO BE TYPE A-1
2. UNLESS NOTED OTHERWISE ALL CEILINGS ARE TO BE MOUNTED 2700mm ABOVE THE FINISHED FLOOR.

SPECIFIC NOTES:

1. GYPSUM BOARD SOFFIT REFER TO DETAIL 47/SA-506.
2. GYPSUM BOARD ROOF ACCESS SOFFIT REFER TO DETAIL 19/SA-502.
3. GYPSUM BOARD SOFFIT REFER TO DETAIL 48/SA-506.

CEILING LEGEND

- OS — CEILING-MOUNTED OCCUPANCY SENSOR
- EXIT LIGHT
- LIGHT FIXTURES, SEE ELEC.
- EMERGENCY LIGHT FIXTURES, SEE ELEC.
- EXTERIOR LIGHT FIXTURE, SEE ELEC.
- RETURN GRILLE, SEE MECH.
- CEILING DIFFUSER, SEE MECH.
- DUCTWORK SEE MECH.
- SPRINKLER SYSTEM, SEE FP. DWGS
- EPS — EXPOSED STRUCTURE, FACTORY PRIMED
- A-1 — 600mm X 1200mm LAY-IN CEILING SYSTEM RE: TO SECTION 09 51 00
- A-1 — SUSPENDED GYPSUM BOARD CEILING SYSTEM – PAINTED REFER TO SECTION 09 51 00
- A-2 — SUSPENDED WATER RESISTANT GYPSUM BOARD CEILING SYSTEM – PAINTED REFER TO SECTION 09 51 00
- XXXX — HEIGHT TO UNDERSIDE OF CEILING FROM FINISHED FLOOR

1 0 1 2 3 4 5 6 7 8 9
1:100

THESE DRAWINGS ARE "NOT APPROVED FOR CONSTRUCTION" SINCE THESE ARE BASED UPON ASSUMED CONDITIONS. THE CONTRACTOR SHALL NOT PROCEED WITH CONSTRUCTION UNTIL THE ASSUMED CONDITIONS ARE VALIDATED AND APPROVAL IS RECEIVED FROM THE CONTRACTING OFFICER.

REGISTERED ARCHITECT — STATE OF NEW YORK

2/6/2012

UNLESS OTHERWISE NOTED, LINEAR DIMENSIONS SHOWN ARE IN MILLIMETERS.

DESIGN COMPLETE SUBMITTAL

FNL	DESIGN COMPLETE SUBMITTAL	02-06-12	WESR
SYMB	DESCRIPTION	DATE	APR

DESIGNED BY: PTO
DATE: 02-06-2012
DRAWN BY: NLW
SUBMITTED BY: TETRA TECH
CHECKED BY: KCB
FILE NO.: AF1202A-A103PN

TETRA TECH

US Army Corps of Engineers
Middle East District

COMMAND & CONTROL FACILITY
KANDAHAR AIR FIELD, AFGHANISTAN
COMMAND & CONTROL FACILITY
FIRST FLOOR
REFLECTED CEILING PLAN

SHEET REFERENCE NUMBER:
A
A-103

W:\23308\127-23308-11004\CAD\MED Drawings\AF1202\AF1202A\Architectural\AF1202A-A103PN.dwg 3/7/2012 9:17:01 AM Jeffers, Scott

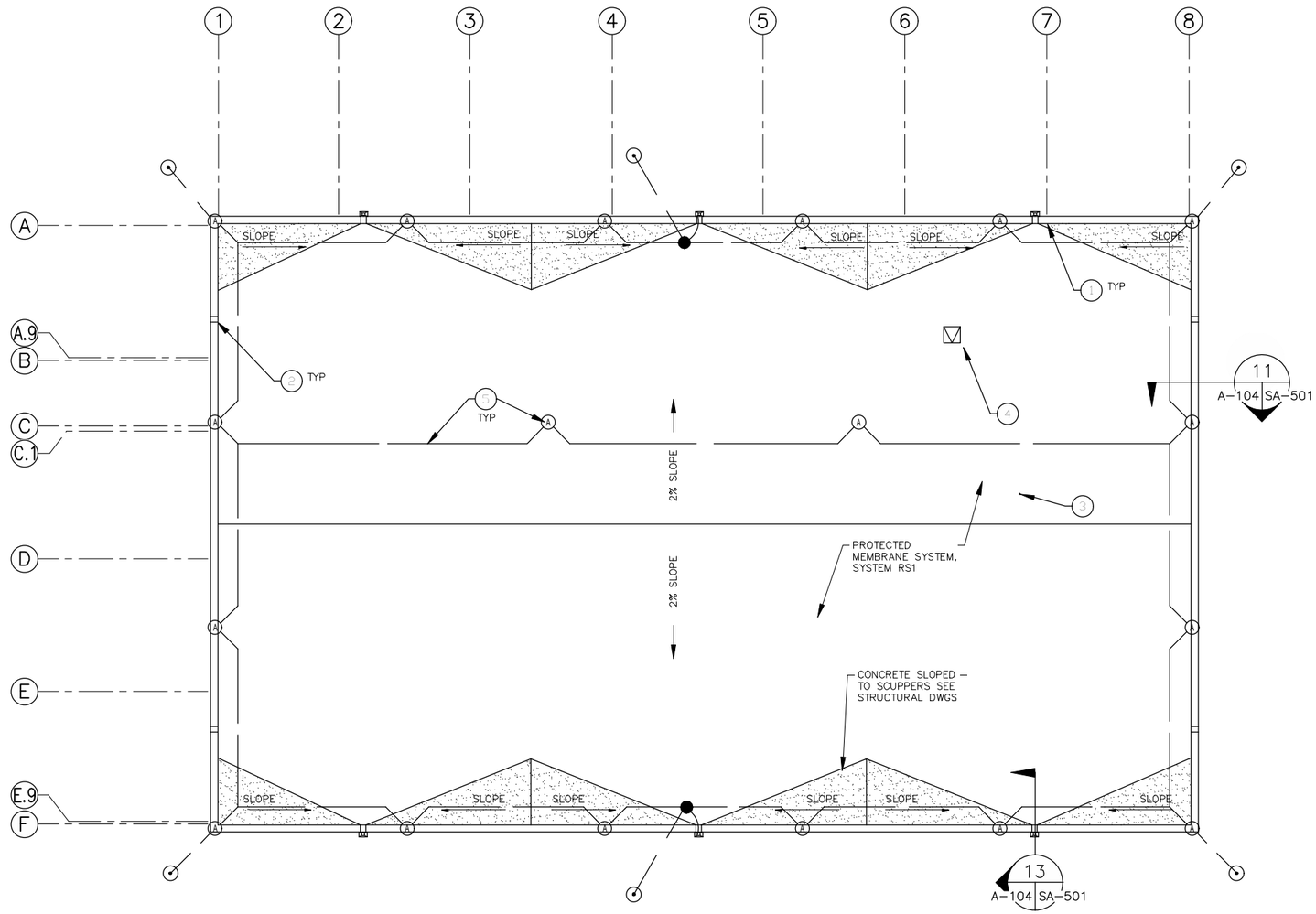

ROOF PLAN
SCALE 1:100

ROOF NOTES

ROOF SYSTEM IS TO BE RS1, UNO SEE SHEET SA-501 FOR ROOF SYSTEM DETAIL

CRICKETS SHOWN ARE TO BE BUILT WITH SLOPED CONCRETE, 2% SLOPE TYP.

1. SCUPPER LOCATION, SEE 13/SA-501
2. OVERFLOW DRAIN LOCATION, SEE DETAIL 12/SA-501
3. ROOF VENT, SEE 20/SA-502
4. ROOF SCUTTLE REFER TO DETAIL 19/SA-502
5. LIGHTNING AIR TERMINAL AND CONDUCTOR, REFER TO ELEC DWGS

1 0 1 2 3 4 5 6 7 8 9
1:100

THESE DRAWINGS ARE "NOT APPROVED FOR CONSTRUCTION" SINCE THESE ARE BASED UPON ASSUMED CONDITIONS. THE CONTRACTOR SHALL NOT PROCEED WITH CONSTRUCTION UNTIL THE ASSUMED CONDITIONS ARE VALIDATED AND APPROVAL IS RECEIVED FROM THE CONTRACTING OFFICER.

REGISTERED ARCHITECT STATE OF NEW YORK

2/6/2012

UNLESS OTHERWISE NOTED, LINEAR DIMENSIONS SHOWN ARE IN MILLIMETERS.

DESIGN COMPLETE SUBMITTAL

SYMB	DESCRIPTION	DATE	APR
FNL	DESIGN COMPLETE SUBMITTAL	02-06-12	WESR

DESIGNED BY: PTO
DATE: 02-06-2012
DRAWN BY: NLW
SUBMITTED BY: TETRA TECH
CHECKED BY: KCB
FILE NO.: AF1202A-A104PN

TETRA TECH

US Army Corps of Engineers
Middle East District

COMMAND & CONTROL FACILITY
KANDAHAR AIR FIELD, AFGHANISTAN
COMMAND & CONTROL FACILITY
ROOF PLAN

SHEET REFERENCE NUMBER:
A
A-104

W:\23308\127-23308-11004\CAD\MED Drawings\AF1202\AF1202A\Architectural\AF1202A-A104PN.dwg 3/7/2012 9:18:36 AM Jeffers, Scott

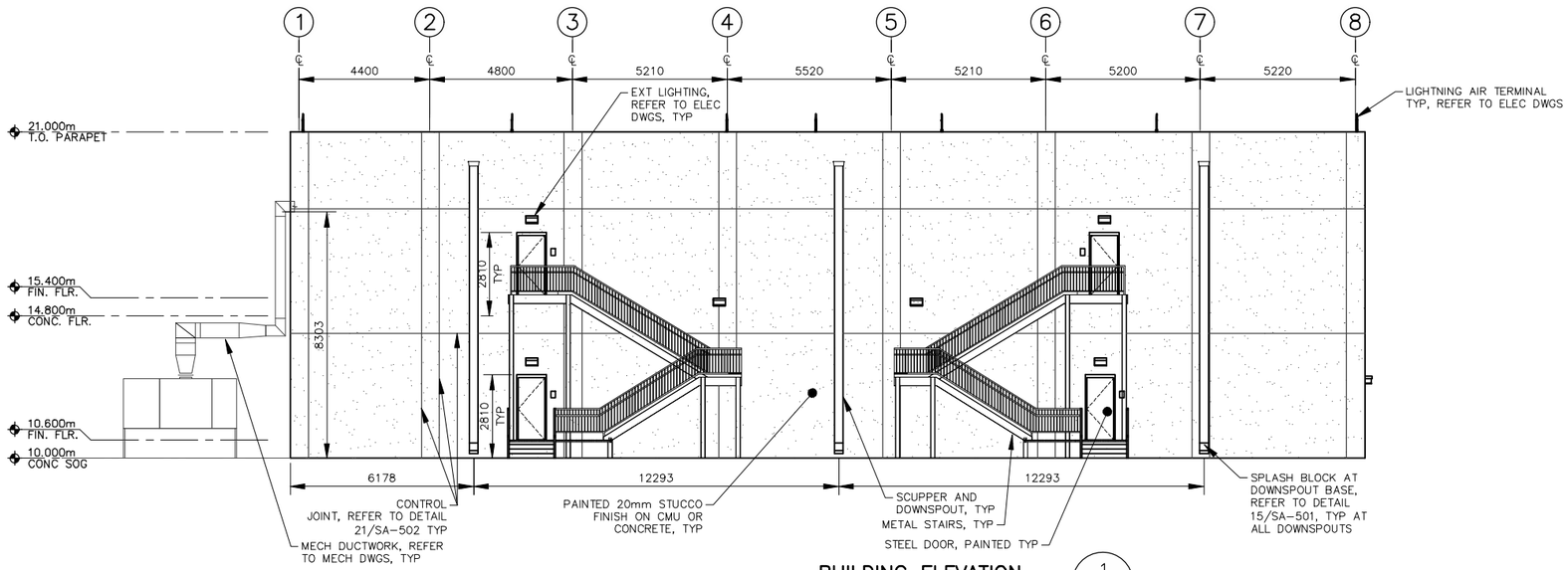

BUILDING ELEVATION 1
SCALE 1:100 A-100, A-101 A-200

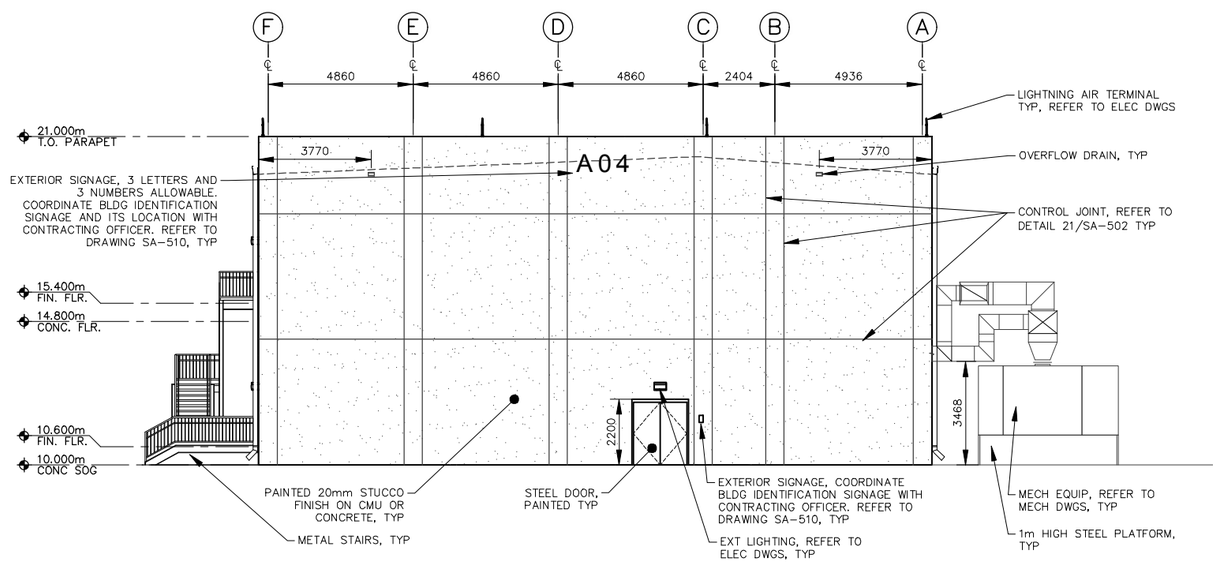

BUILDING ELEVATION 2
SCALE 1:100 A-100, A-101 A-200

1 0 1 2 3 4 5 6 7 8 9
1:100

THESE DRAWINGS ARE "NOT APPROVED FOR CONSTRUCTION" SINCE THESE ARE BASED UPON ASSUMED CONDITIONS. THE CONTRACTOR SHALL NOT PROCEED WITH CONSTRUCTION UNTIL THE ASSUMED CONDITIONS ARE VALIDATED AND APPROVAL IS RECEIVED FROM THE CONTRACTING OFFICER.

REGISTERED ARCHITECT
WILLIAM EDWARD STEVENSON JR.
026-39696
STATE OF NEW YORK
2/6/2012

UNLESS OTHERWISE NOTED, LINEAR DIMENSIONS SHOWN ARE IN MILLIMETERS.

DESIGN COMPLETE SUBMITTAL

SYMB	DESCRIPTION	DATE	APR
FNL	DESIGN COMPLETE SUBMITTAL	02-06-12	WESR

DESIGNED BY: PTO
DATE: 02-06-2012
DRAWN BY: NLW
SUBMITTED BY: TETRA TECH
CHECKED BY: KCB
FILE NO.: AF1202A-A200EL

TETRA TECH

US Army Corps of Engineers
Middle East District

COMMAND & CONTROL FACILITY
KANDAHAR AIR FIELD, AFGHANISTAN
COMMAND & CONTROL FACILITY
BUILDING ELEVATIONS

SHEET REFERENCE NUMBER:
A
A-200

W:\23308\127-23308-11004\CAD\MED Drawings\AF1202\AF1202A\Architectural\AF1202A-A200EL.dwg 3/7/2012 9:20:09 AM Jeffers, Scott

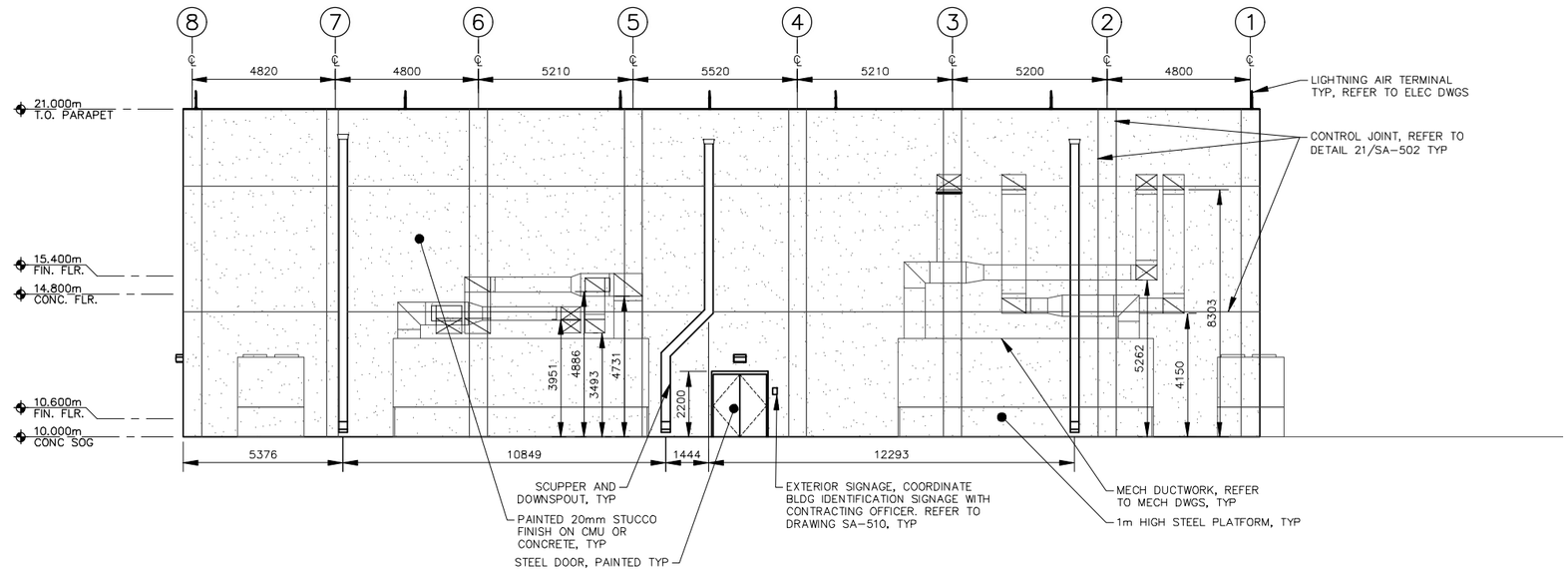

BUILDING ELEVATION 3
SCALE 1:100 A-100, A-101 A-201

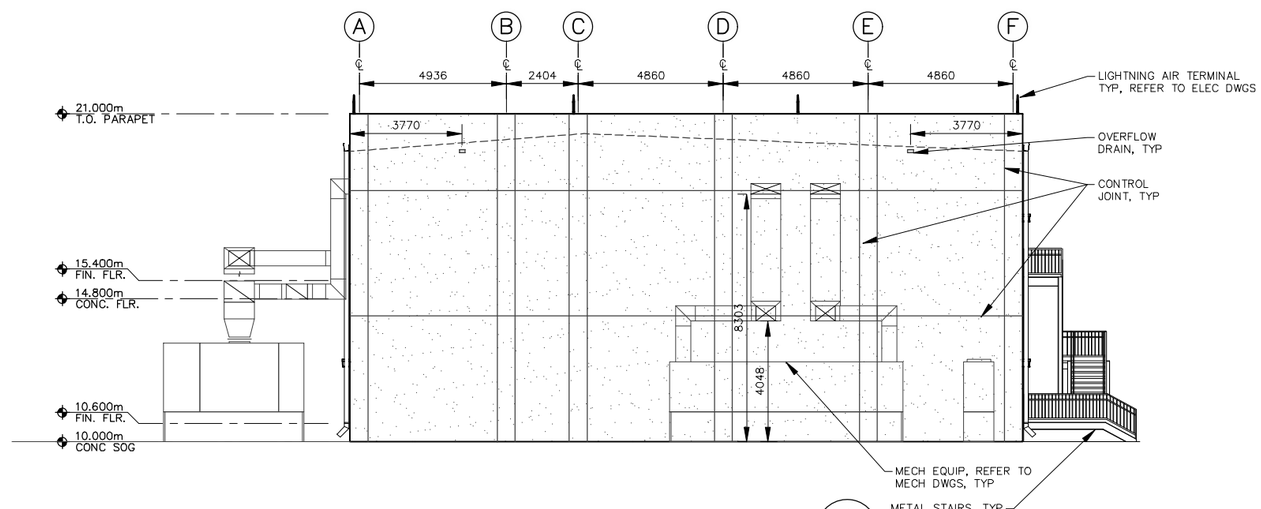

BUILDING ELEVATION 4
SCALE 1:100 A-100, A-101 A-201

1 0 1 2 3 4 5 6 7 8 9
1:100

THESE DRAWINGS ARE "NOT APPROVED FOR CONSTRUCTION" SINCE THESE ARE BASED UPON ASSUMED CONDITIONS. THE CONTRACTOR SHALL NOT PROCEED WITH CONSTRUCTION UNTIL THE ASSUMED CONDITIONS ARE VALIDATED AND APPROVAL IS RECEIVED FROM THE CONTRACTING OFFICER.

REGISTERED ARCHITECT
STATE OF NEW YORK

2/6/2012

UNLESS OTHERWISE NOTED, LINEAR DIMENSIONS SHOWN ARE IN MILLIMETERS.

DESIGN COMPLETE SUBMITTAL

FNL	DESIGN COMPLETE SUBMITTAL	02-06-12	WESR
SYMB	DESCRIPTION	DATE	APR

DESIGNED BY: PTO
DRAWN BY: NLW
CHECKED BY: KCB
DATE: 02-06-2012
SUBMITTED BY: TETRA TECH
FILE NO.: AF1202A-A201EL

TETRA TECH

US Army Corps of Engineers
Middle East District

COMMAND & CONTROL FACILITY
KANDAHAR AIR FIELD, AFGHANISTAN
COMMAND & CONTROL FACILITY
BUILDING ELEVATIONS

SHEET REFERENCE NUMBER:
A
A-201

W:\23308\127-23308-11004\CAD\MED Drawings\AF1202\AF1202A\Architectural\AF1202A-A201EL.dwg 3/7/2012 9:21:13 AM Jeffers, Scott

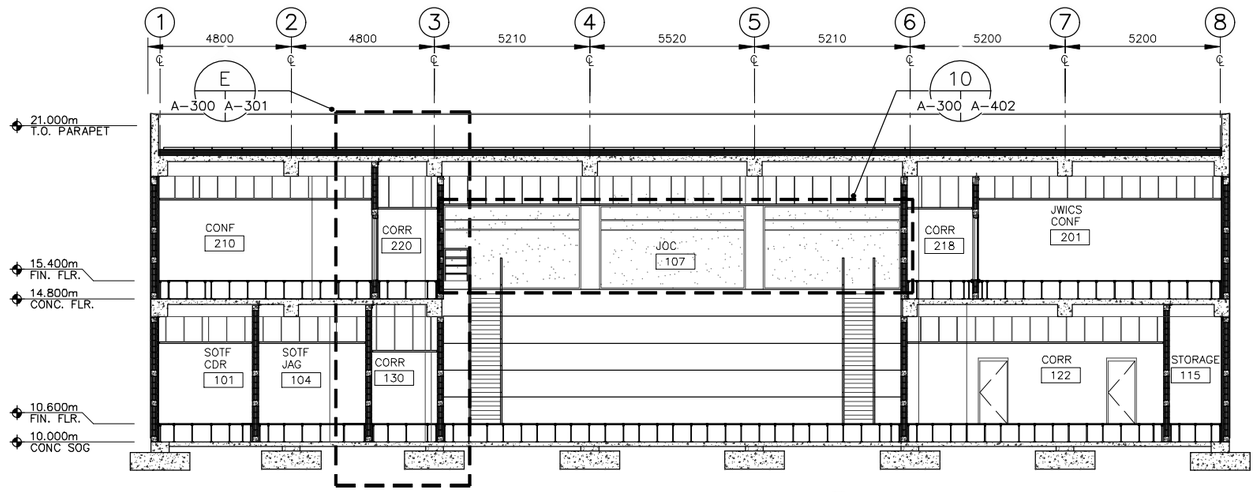

BUILDING SECTION A
SCALE 1:100 A-100, A-101, A-106 A-300

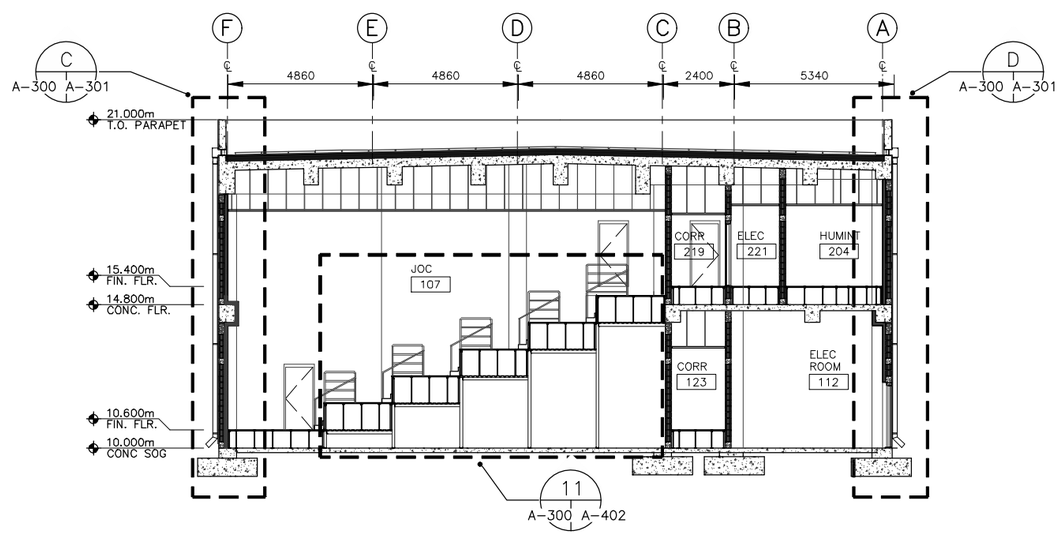

BUILDING SECTION B
SCALE 1:100 A-100, A-101, A-106 A-300

1 0 1 2 3 4 5 6 7 8 9
1:100

THESE DRAWINGS ARE "NOT APPROVED FOR CONSTRUCTION" SINCE THESE ARE BASED UPON ASSUMED CONDITIONS. THE CONTRACTOR SHALL NOT PROCEED WITH CONSTRUCTION UNTIL THE ASSUMED CONDITIONS ARE VALIDATED AND APPROVAL IS RECEIVED FROM THE CONTRACTING OFFICER.

REGISTERED ARCHITECT
STATE OF NEW YORK
2/6/2012

UNLESS OTHERWISE NOTED, LINEAR DIMENSIONS SHOWN ARE IN MILLIMETERS.

DESIGN COMPLETE SUBMITTAL

SYMB	DESCRIPTION	DATE	APR
FNL	DESIGN COMPLETE SUBMITTAL	02-06-12	WESR

DESIGNED BY: PTO
DATE: 02-06-2012
DRAWN BY: NLW
SUBMITTED BY: TETRA TECH
CHECKED BY: KCB
FILE NO.: AF1202A-A300SE

TETRA TECH

US Army Corps of Engineers
Middle East District

COMMAND & CONTROL FACILITY
KANDAHAR AIR FIELD, AFGHANISTAN
COMMAND & CONTROL FACILITY
BUILDING SECTIONS

SHEET REFERENCE NUMBER:
A
A-300

W:\23308\127-23308-11004\CAD\MED Drawings\AF1202\AF1202A\Architectural\AF1202A-A300SE.dwg 3/7/2012 9:22:55 AM Jeffers, Scott

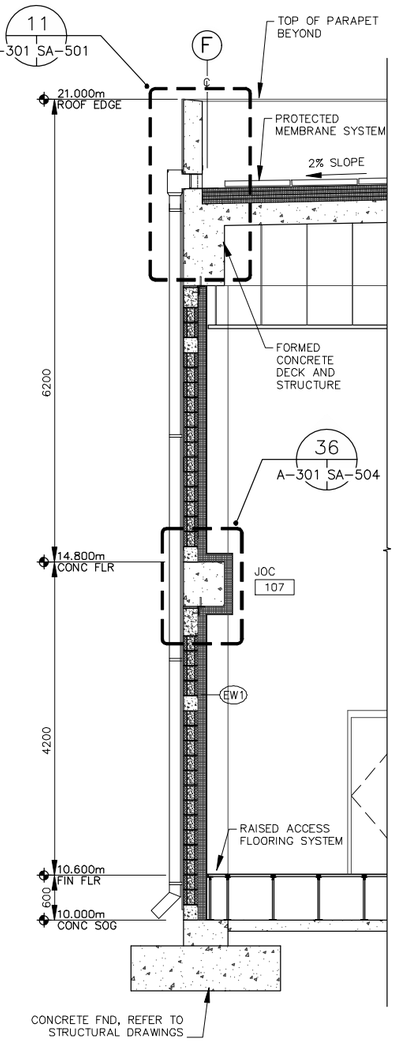

NOTE: REFER TO STRUCTURAL DRAWINGS FOR ADDITIONAL INFORMATION.

WALL SECTION C
SCALE 1:40 A-300 A-301

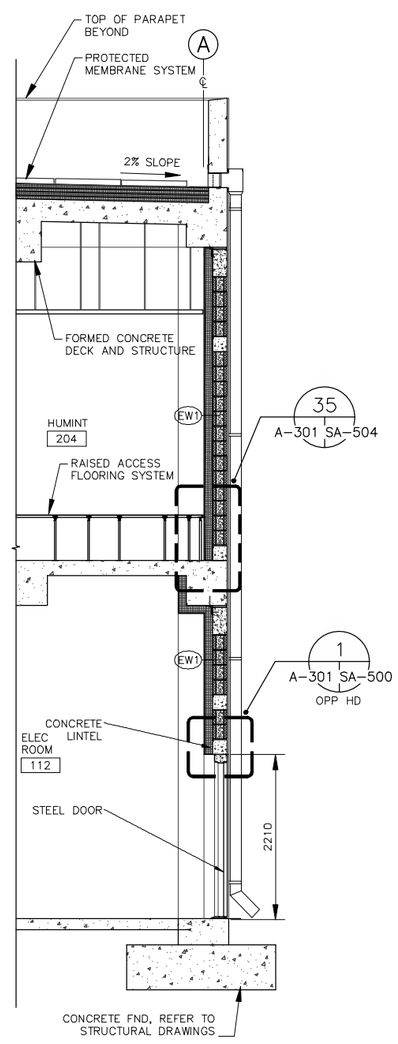

NOTE: REFER TO STRUCTURAL DRAWINGS FOR ADDITIONAL INFORMATION.

WALL SECTION D
SCALE 1:40 A-300 A-301

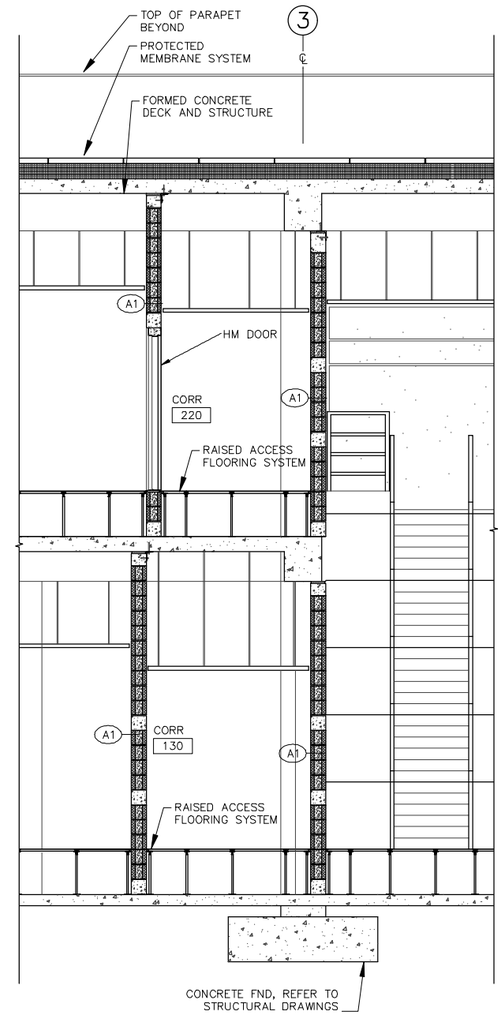

NOTE: REFER TO STRUCTURAL DRAWINGS FOR ADDITIONAL INFORMATION.

WALL SECTION E
SCALE 1:40 A-300 A-301

0 .5 1 2 3 4
1:40

THESE DRAWINGS ARE "NOT APPROVED FOR CONSTRUCTION" SINCE THESE ARE BASED UPON ASSUMED CONDITIONS. THE CONTRACTOR SHALL NOT PROCEED WITH CONSTRUCTION UNTIL THE ASSUMED CONDITIONS ARE VALIDATED AND APPROVAL IS RECEIVED FROM THE CONTRACTING OFFICER.

REGISTERED ARCHITECT
HENRY J. LEBANOWICZ III
STATE OF NEW YORK
2/6/2012

UNLESS OTHERWISE NOTED, LINEAR DIMENSIONS SHOWN ARE IN MILLIMETERS.

DESIGN COMPLETE SUBMITTAL

SYMB	DESCRIPTION	DATE	APR
FNL	DESIGN COMPLETE SUBMITTAL	02-06-12	WESR

DESIGNED BY: PTO
DATE: 02-06-2012
DRAWN BY: NLW
SUBMITTED BY: TETRA TECH
CHECKED BY: KCB
FILE NO.: AF1202A-A301SE

TETRA TECH

US Army Corps of Engineers
Middle East District

COMMAND & CONTROL FACILITY
KANDAHAR AIR FIELD, AFGHANISTAN
COMMAND & CONTROL FACILITY
WALL SECTIONS

SHEET REFERENCE NUMBER:
A
A-301

W:\23308\127-23308-11004\CAD\MED Drawings\AF1202\AF1202A\Architectural\AF1202A-A301SE.dwg 3/7/2012 9:24:04 AM Jeffers, Scott

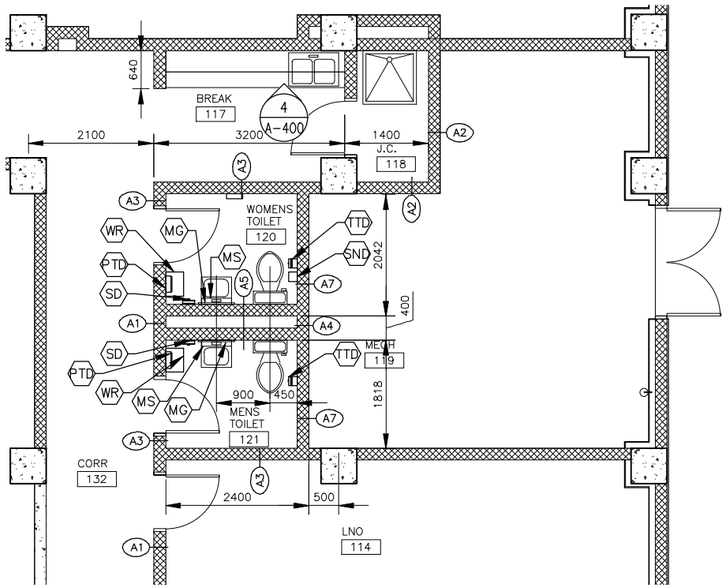

GROUND FLOOR PLAN (1 / A-100 | A-400)
SCALE 1:50

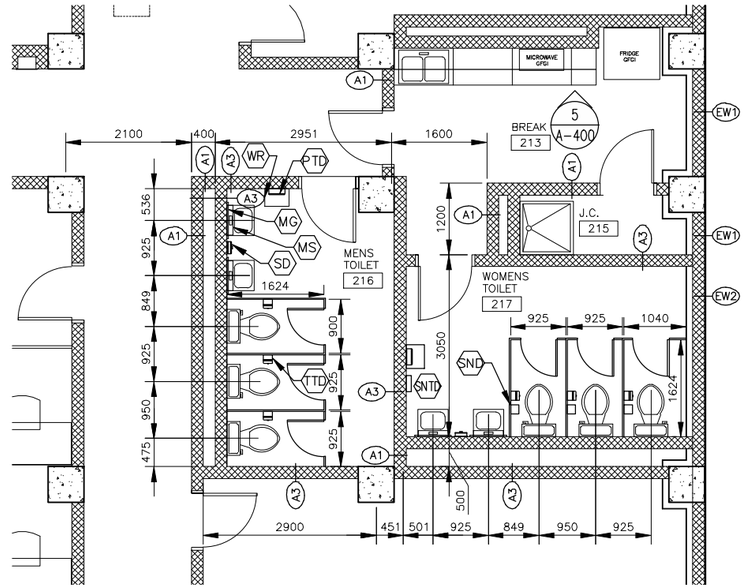

FIRST FLOOR PLAN (2 / A-101 | A-400)
SCALE 1:50

CABINET COMPONENTS
COUNTERTOPS: 20mm PARTICLEBOARD PANEL PRODUCT.
SHELVING: 20mm PARTICLEBOARD PANEL PRODUCT
DIVIDERS: 15mm PARTICLEBOARD PANEL PRODUCT
CABINET BACKS AND BOTTOMS: 16mm PARTICLEBOARD PANEL PRODUCT.
DRAWER SIDES AND BACKS: 15mm PLYWOOD LUMBER.
DRAWER BOTTOMS: 3mm VENEER CORE PLYWOOD PANEL PRODUCT.
DOOR AND DRAWER FRONTS: 20mm PARTICLE BOARD PANEL PRODUCT LAMINATED FRONT, REAR SURFACE AND ALL EDGES.
EXPOSED CABINET ENDS: 16mm PARTICLEBOARD PANEL PRODUCT W/ PLASTIC LAMINATE COVERING.

TOILET ACCESSORIES SCHEDULE	
1.	MIRROR, 460mm x 760mm (MG)
2.	PAPER TOWEL DISPENSER (PTD) – GFGI
3.	WASTE RECEPTACLE (WR)
4.	SOAP DISPENSER (SD) – GFGI
5.	SANITARY NAPKIN DISPOSER (SND)
6.	TOILET TISSUE DISPENSER (TTD) – GFGI
7.	NOT USED
8.	SANITARY NAPKIN AND TAMPON DISPENSER (SNTD)

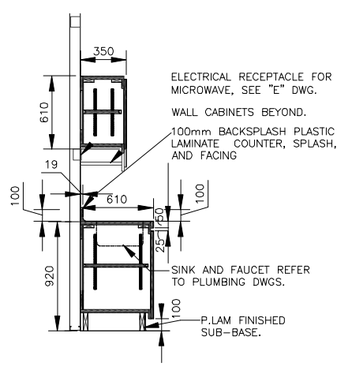

TYP. CASEWORK SECTION (3 / A-400 | A-400)
SCALE 1:25

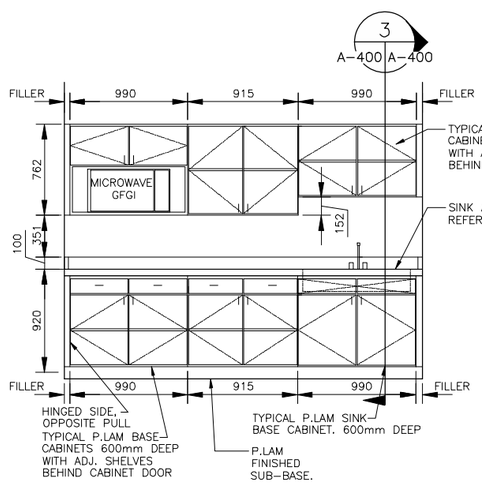

ELEVATION (4 / A-400 | A-400)
SCALE 1:25

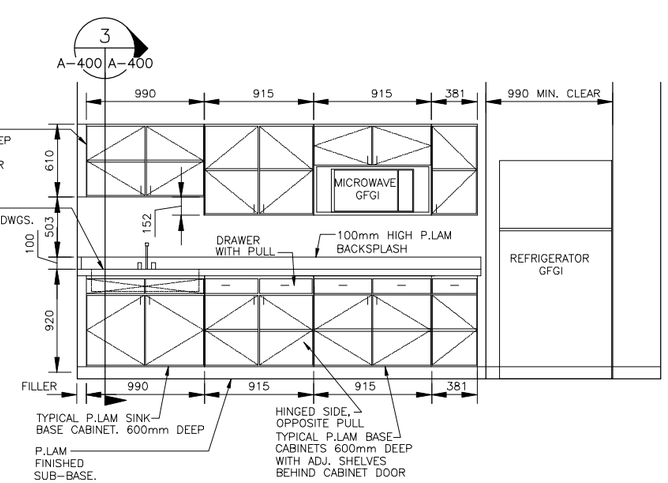

ELEVATION (5 / A-400 | A-400)
SCALE 1:25

0 .10 .20 .30 .40 .50
1:5
1 0 1 2 3 4 5 6 7 8 9
1:100

THESE DRAWINGS ARE "NOT APPROVED FOR CONSTRUCTION" SINCE THESE ARE BASED UPON ASSUMED CONDITIONS. THE CONTRACTOR SHALL NOT PROCEED WITH CONSTRUCTION UNTIL THE ASSUMED CONDITIONS ARE VALIDATED AND APPROVAL IS RECEIVED FROM THE CONTRACTING OFFICER.

REGISTERED ARCHITECT — STATE OF NEW YORK

2/6/2012

UNLESS OTHERWISE NOTED, LINEAR DIMENSIONS SHOWN ARE IN MILLIMETERS.

DESIGN COMPLETE SUBMITTAL

SYMB	DESCRIPTION	DATE	APR
FNL	DESIGN COMPLETE SUBMITTAL	02-06-12	WESR

DESIGNED BY: PTO
DATE: 02-06-2012
DRAWN BY: NLW
SUBMITTED BY: TETRA TECH
CHECKED BY: KCB/MHH
FILE NO.: AF1202A-A400LS

TETRA TECH

US Army Corps of Engineers
Middle East District

COMMAND & CONTROL FACILITY
KANDAHAR AIR FIELD, AFGHANISTAN
COMMAND & CONTROL FACILITY
ENLARGED TOILET ROOM PLANS AND CASEWORK ELEVATIONS

SHEET REFERENCE NUMBER:
A
A-400

W:\23308\127-23308-11004\CAD\MED Drawings\AF1202\AF1202A\Architectural\AF1202A-A400LS.dwg 3/7/2012 9:24:49 AM Jeffers, Scott

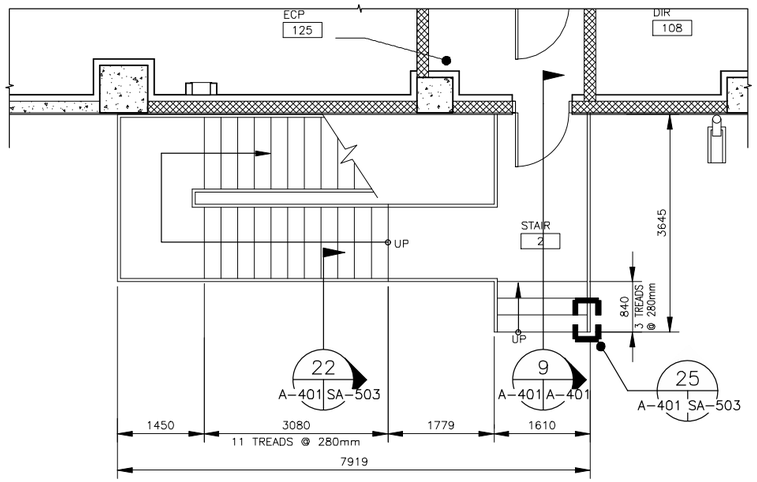

8
A-401 A-401

ENLARGED STAIR 2 — 6 / A-100 A-401
SCALE 1:50

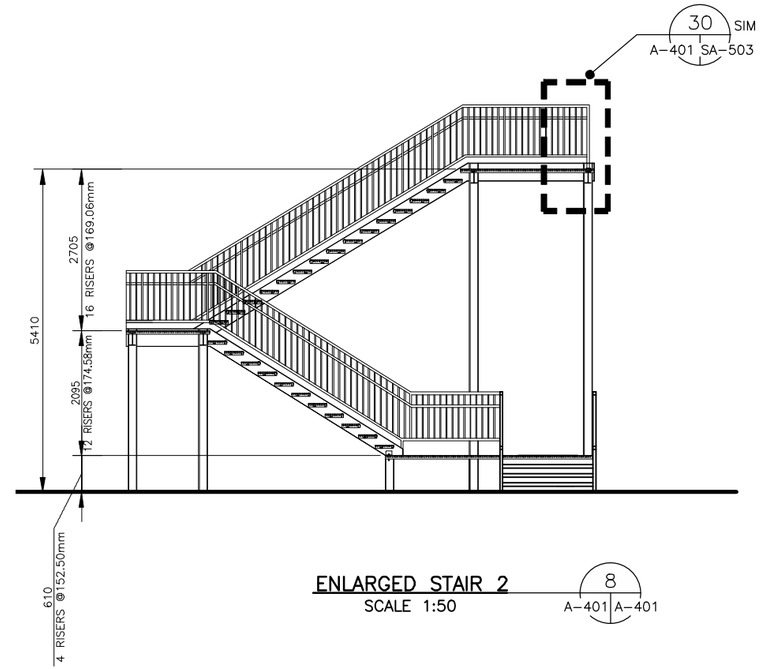

ENLARGED STAIR 2 — 8 / A-401 A-401
SCALE 1:50

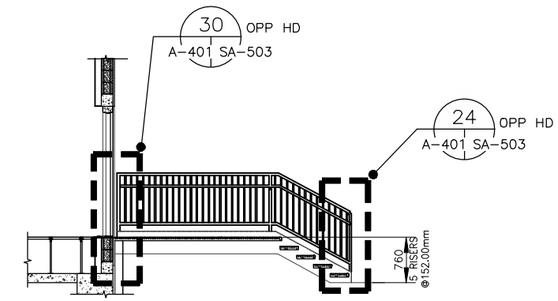

ENLARGED STAIR 2 — 9 / A-401 A-401
SCALE 1:50

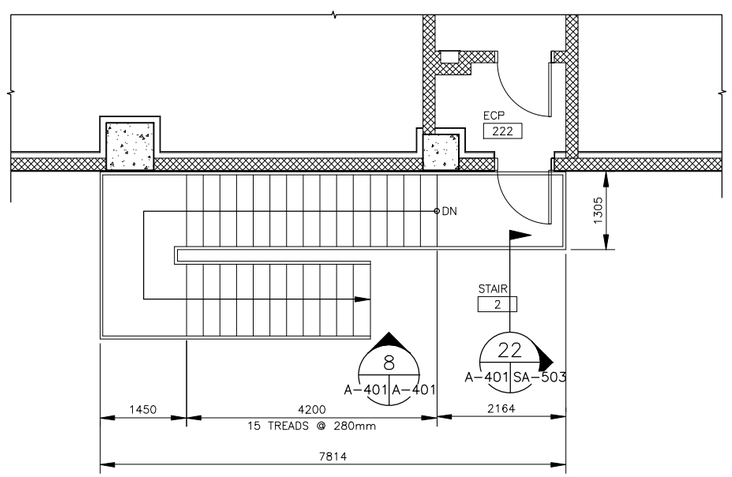

ENLARGED STAIR 2 — 7 / A-100 A-401
SCALE 1:50

1 0 1 2 3 4
1:50

THESE DRAWINGS ARE "NOT APPROVED FOR CONSTRUCTION" SINCE THESE ARE BASED UPON ASSUMED CONDITIONS. THE CONTRACTOR SHALL NOT PROCEED WITH CONSTRUCTION UNTIL THE ASSUMED CONDITIONS ARE VALIDATED AND APPROVAL IS RECEIVED FROM THE CONTRACTING OFFICER.

REGISTERED ARCHITECT
STATE OF NEW YORK
2/6/2012

UNLESS OTHERWISE NOTED, LINEAR DIMENSIONS SHOWN ARE IN MILLIMETERS.

DESIGN COMPLETE SUBMITTAL

FNL	DESIGN COMPLETE SUBMITTAL	02-06-12	WESR
SYMB	DESCRIPTION	DATE	APR

DESIGNED BY: PTO
DATE: 02-06-2012
DRAWN BY: NLW
SUBMITTED BY: TETRA TECH
CHECKED BY: KCB
FILE NO.: AF1202A-A401LS

TETRA TECH

US Army Corps of Engineers
Middle East District

COMMAND & CONTROL FACILITY
KANDAHAR AIR FIELD, AFGHANISTAN
COMMAND & CONTROL FACILITY
ENLARGED STAIR PLANS AND SECTIONS

SHEET REFERENCE NUMBER:
A
A-401

W:\23308\127-23308-11004\CAD\MED Drawings\AF1202\AF1202A\Architectural\AF1202A-A401LS.dwg 3/7/2012 9:26:12 AM Jeffers, Scott

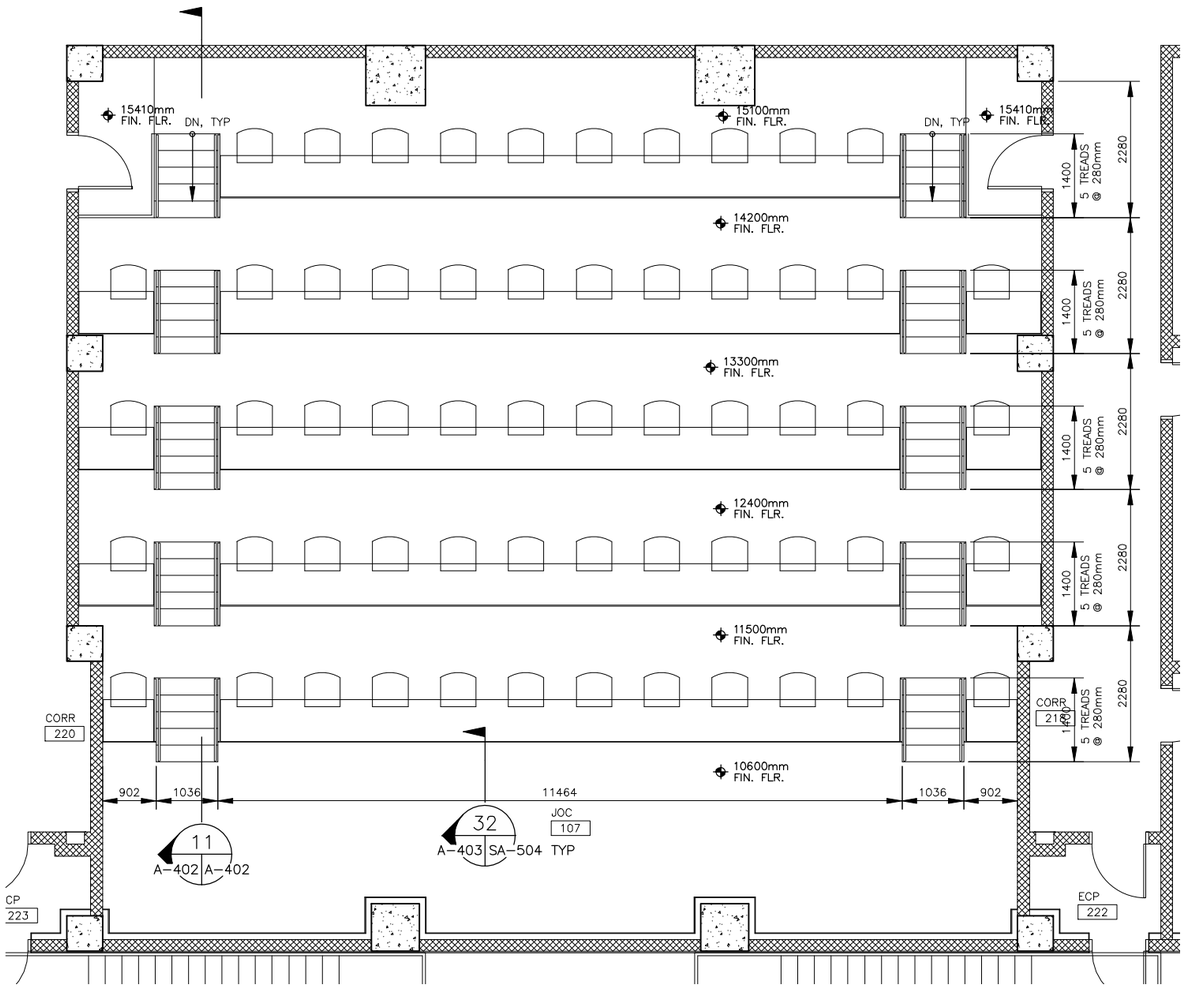

ENLARGED JOC ROOM PLAN (9 / A-100 | A-402)
SCALE 1:50

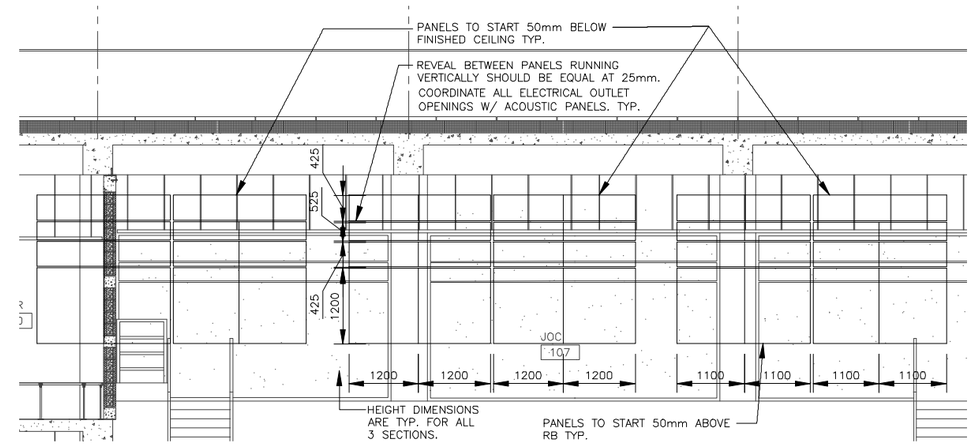

ACOUSTIC PANEL ELEVATION (10 / A-300 | A-402)
SCALE 1:50

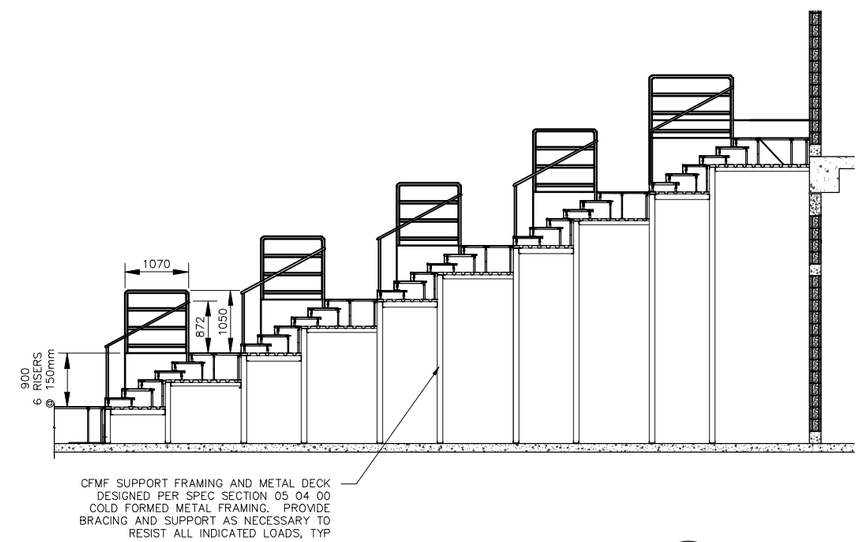

JOC STAIR SECTION (11 / A-402 | A-402)
SCALE 1:50

1 0 1 2 3 4
1:50

THESE DRAWINGS ARE "NOT APPROVED FOR CONSTRUCTION" SINCE THESE ARE BASED UPON ASSUMED CONDITIONS. THE CONTRACTOR SHALL NOT PROCEED WITH CONSTRUCTION UNTIL THE ASSUMED CONDITIONS ARE VALIDATED AND APPROVAL IS RECEIVED FROM THE CONTRACTING OFFICER.

REGISTERED ARCHITECT — STATE OF NEW YORK
2/6/2012

UNLESS OTHERWISE NOTED, LINEAR DIMENSIONS SHOWN ARE IN MILLIMETERS.

DESIGN COMPLETE SUBMITTAL

SYMB	DESCRIPTION	DATE	APR
FNL	DESIGN COMPLETE SUBMITTAL	02-06-12	WESR

DESIGNED BY: PTO
DATE: 02-06-2012
DRAWN BY: NLW
SUBMITTED BY: TETRA TECH
CHECKED BY: KCB
FILE NO.: AF1202A-A402LS

TETRA TECH

US Army Corps of Engineers
Middle East District

COMMAND & CONTROL FACILITY
KANDAHAR AIR FIELD, AFGHANISTAN
COMMAND & CONTROL FACILITY
ENLARGED PLAN

SHEET REFERENCE NUMBER:
A
A-402

W:\23308\127-23308-11004\CAD\MED Drawings\AF1202\AF1202A\Architectural\AF1202A-A402LS.dwg 3/7/2012 9:27:28 AM Jeffers, Scott

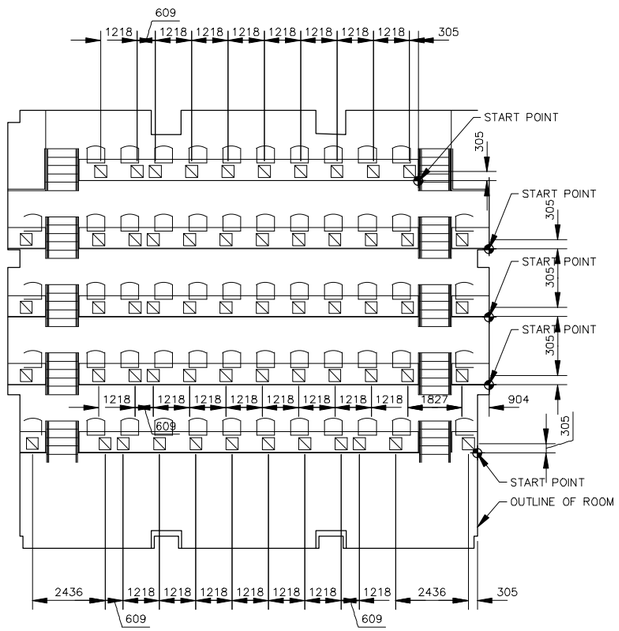

ROOM 107 – FLOOR BOX LAYOUT
SCALE 1:100

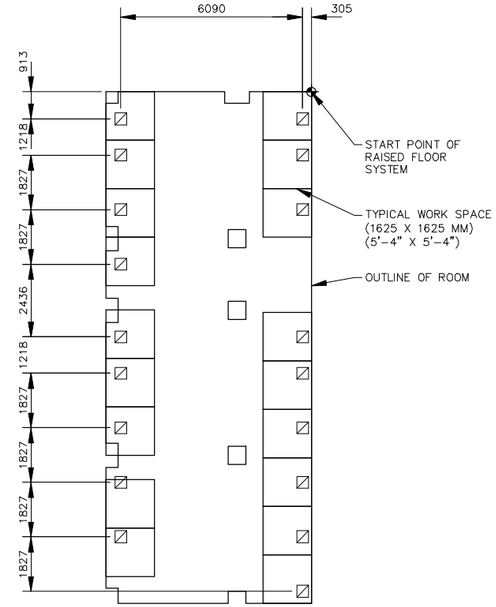

ROOM 208 – FLOOR BOX LAYOUT
SCALE 1:100

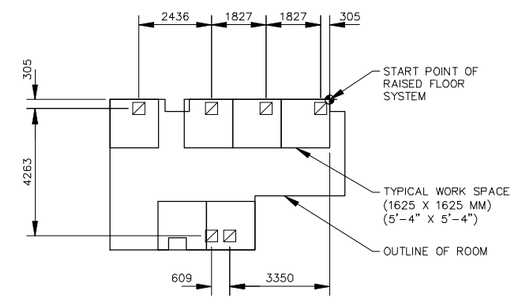

ROOM 204 – FLOOR BOX LAYOUT
SCALE 1:100

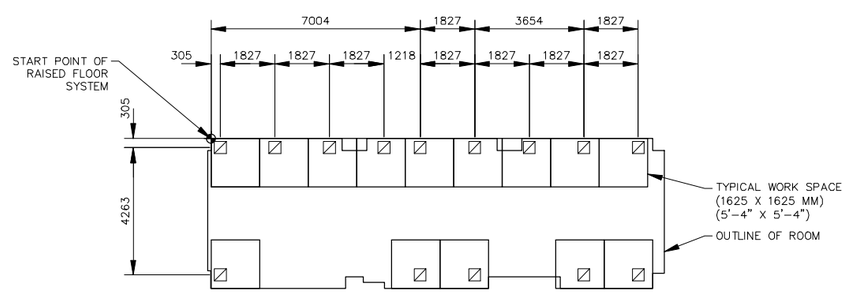

ROOM 116 – FLOOR BOX LAYOUT
SCALE 1:100

1 0 1 2 3 4 5 6 7 8 9
1:100

THESE DRAWINGS ARE "NOT APPROVED FOR CONSTRUCTION" SINCE THESE ARE BASED UPON ASSUMED CONDITIONS. THE CONTRACTOR SHALL NOT PROCEED WITH CONSTRUCTION UNTIL THE ASSUMED CONDITIONS ARE VALIDATED AND APPROVAL IS RECEIVED FROM THE CONTRACTING OFFICER.

REGISTERED ARCHITECT
STATE OF NEW YORK

2/6/2012

UNLESS OTHERWISE NOTED, LINEAR DIMENSIONS SHOWN ARE IN MILLIMETERS.

DESIGN COMPLETE SUBMITTAL

SYMB	DESCRIPTION	DATE	APR
FNL	DESIGN COMPLETE SUBMITTAL	02-06-12	WESR

DESIGNED BY: PTO
DATE: 02-06-2012
DRAWN BY: NLW
SUBMITTED BY: TETRA TECH
CHECKED BY: KCB
FILE NO.: AF1202A-A403LS

TETRA TECH

US Army Corps of Engineers
Middle East District

COMMAND & CONTROL FACILITY
KANDAHAR AIR FIELD, AFGHANISTAN
JOINT OPERATOINS CENTER
FLOOR BOX LAYOUT PLANS

SHEET REFERENCE NUMBER:
A
A-403

W:\23308\127-23308-11004\CAD\MED Drawings\AF1202\AF1202A\Architectural\AF1202A-A403LS.dwg 3/7/2012 9:28:08 AM Jeffers, Scott

OPENING AND FRAME SCHEDULE - CCF

DOOR		DOOR							FRAME						HDW	REMARKS
RM	NO	TYPE	MAT	QTY	WIDTH	HT	SOUND RATING	FIRE RATING	TYPE	MAT	FIRE RATING	HEAD	JAMB	SILL	SET	
GROUND FLOOR																
101	1	F	HMD-S	1	900	2100	STC 45	-	AA	HM	-	4/SA-500	3/SA-500	39/SA-504	13	CIPHER LOCK
102	1	F	HMD-S	1	900	2100	STC 45	-	AA	HM	-	4/SA-500	3/SA-500	39/SA-504	13	CIPHER LOCK
103	1	F	HMD-S	1	900	2100	STC 45	-	AA	HM	-	4/SA-500	3/SA-500	39/SA-504	13	CIPHER LOCK
104	1	F	HMD-S	1	900	2100	STC 45	-	AA	HM	-	4/SA-500	3/SA-500	39/SA-504	13	CIPHER LOCK
105	1	F	HMD-S	1	900	2100	STC 45	-	AA	HM		4/SA-500	3/SA-500	39/SA-504	13	CIPHER LOCK
106	1	F	HMD-S	1	900	2100	STC 45	-	AA	HM		4/SA-500	3/SA-500	39/SA-504	13	CIPHER LOCK
107	1	F	HMD-S	1	900	2100	STC 45	-	AA	HM		4/SA-500	3/SA-500	39/SA-504	14	CIPHER LOCK
107	2	F	HMD-S	1	900	2100	STC 45	-	AA	HM		4/SA-500	3/SA-500	39/SA-504	14	CIPHER LOCK
108	1	F	HMD-S	1	900	2100	STC 45	-	AA	HM		4/SA-500	3/SA-500	39/SA-504	13	CIPHER LOCK
109	1	F	HMD-S	1	900	2100	STC 45	-	AA	HM		4/SA-500	3/SA-500	39/SA-504	13	CIPHER LOCK
110	1	F	HMD-S	1	900	2100	STC 45	-	AA	HM		4/SA-500	3/SA-500	39/SA-504		CIPHER LOCK
111	1	F	HMD-S	1	900	2100	STC 45	-	AA	HM		4/SA-500	3/SA-500	39/SA-504	13	CIPHER LOCK
112	1	F	HMD-E	2	900	2100	STC 45	-	BB	HM		1/SA-500	2/SA-500	5/SA-500	4	FE/BR - 15 MINUTE RATING, CIPHER LOCK
114	1	F	HMD-S	1	900	2100	STC 45	-	AA	HM		4/SA-500	3/SA-500	39/SA-504	13	CIPHER LOCK
115	1	F	HMD	1	900	2100	-	-	AA	HM		4/SA-500	3/SA-500	39/SA-504	8	
116	1	F	HMD-S	1	900	2100	STC 45	-	AA	HM		4/SA-500	3/SA-500	39/SA-504	13	CIPHER LOCK
118	1	F	HMD	1	900	2100	-	-	AA	HM		4/SA-500	3/SA-500	38/SA-504	6	
119	1	F	HMD-E	2	900	2100	STC 45	-	BB	HM		1/SA-500	2/SA-500	5/SA-500	3	FE/BR - 15 MINUTE RATING, CIPHER LOCK
120	1	F	HMD	1	900	2100	-	-	AA	HM		4/SA-500	3/SA-500	38/SA-504	10	
121	1	F	HMD	1	900	2100	-	-	AA	HM		4/SA-500	3/SA-500	38/SA-504	10	
124	1	F	HMD	1	900	2100	-	-	AA	HM		4/SA-500	3/SA-500	-	9	
125	1	F	HMD	1	900	2100	-	-	AA	HM		4/SA-500	3/SA-500	-	12	
125	2	F	HMD-E	1	900	2100	STC 45	-	AA	HM		1/SA-500	2/SA-500	30/SA-503	2	FE/BR - 15 MINUTE RATING, CIPHER LOCK
126	1	F	HMD	1	900	2100	-	-	AA	HM		4/SA-500	3/SA-500	-	12	
126	2	F	HMD-E	1	900	2100	STC 45	-	AA	HM		1/SA-500	2/SA-500	30/SA-503	2	FE/BR - 15 MINUTE RATING, CIPHER LOCK
127	1	F	HMD-L	1	900	2100	-	-	AA	HM		4/SA-500	3/SA-500	39/SA-504	5	
128	1	F	HMD-L	1	900	2100	-	-	AA	HM		4/SA-500	3/SA-500	39/SA-504	5	
129	1	F	HMD-S	1	900	2100	STC 45	-	AA	HM		4/SA-500	3/SA-500	-	13	CIPHER LOCK
131	1	F	HMD-S	1	900	2100	STC 45	-	AA	HM		4/SA-500	3/SA-500	39/SA-504	13	CIPHER LOCK
FIRST FLOOR																
107	3	F	HMD-S	1	900	2100	STC 45	-	AA	HM	-	4/SA-500	3/SA-500	39/SA-504	13	CIPHER LOCK
107	4	F	HMD-S	1	900	2100	STC-45	-	AA	HM	-	4/SA-500	3/SA-500	39/SA-504	13	CIPHER LOCK
201	1	F	HMD-S	1	900	2100	STC 45	-	AA	HM	-	4/SA-500	3/SA-500	39/SA-504	13	CIPHER LOCK
202	1	F	HMD-S	1	900	2100	STC 45	-	AA	HM	-	4/SA-500	3/SA-500	39/SA-504	13	CIPHER LOCK
203	1	F	HMD-S	1	900	2100	STC 45	-	AA	HM	-	4/SA-500	3/SA-500	39/SA-504	13	CIPHER LOCK
204	1	F	HMD-S	1	900	2100	STC 45	-	AA	HM	-	4/SA-500	3/SA-500	39/SA-504	13	CIPHER LOCK
205	1	F	HMD-S	1	900	2100	STC 45	-	AA	HM	-	4/SA-500	3/SA-500	39/SA-504	13	CIPHER LOCK
206	1	F	HMD-S	1	900	2100	STC 45	-	AA	HM	-	4/SA-500	3/SA-500	39/SA-504	13	CIPHER LOCK
207	1	F	HMD-S	1	900	2100	STC 45	-	AA	HM	-	4/SA-500	3/SA-500	39/SA-504	13	CIPHER LOCK
208	1	F	HMD-S	1	900	2100	STC 45	-	AA	HM	-	4/SA-500	3/SA-500	39/SA-504	13	CIPHER LOCK
209	1	F	HMD-F	1	900	2100	STC 45	45 MIN	AA	HM	-	4/SA-500	3/SA-500	39/SA-504	13	
210	1	F	HMD-S	1	900	2100	STC 45	-	AA	HM	-	4/SA-500	3/SA-500	39/SA-504	13	CIPHER LOCK
213	1	F	HMD	1	900	2100	-	-	AA	HM	-	4/SA-500	3/SA-500	-	11	
215	1	F	HMD	1	900	2100	-	-	AA	HM	-	4/SA-500	3/SA-500	38/SA-504	6	
216	1	F	HMD	1	900	2100	-	-	AA	HM	-	4/SA-500	3/SA-500	38/SA-504	11	
217	1	F	HMD	1	900	2100	-	-	AA	HM	-	4/SA-500	3/SA-500	38/SA-504	11	
221	1	F	HMD	1	900	2100	-	-	AA	HM	-	4/SA-500	3/SA-500	-	7	
222	1	F	HMD	1	900	2100	-	-	AA	HM	-	4/SA-500	3/SA-500	-	12	
222	2	F	HMD-E	1	900	2100	STC 45	-	AA	HM	-	1/SA-500	2/SA-500	30/SA-503	1	FE/BR - 15 MINUTE RATING, CIPHER LOCK
223	1	F	HMD	1	900	2100	-	-	AA	HM	-	4/SA-500	3/SA-500	-	12	
223	2	F	HMD-E	1	900	2100	STC 45	-	AA	HM	-	1/SA-500	2/SA-500	30/SA-503	1	CIPHER LOCK

GENERAL NOTES:

HMD INTERIOR HEAVY DUTY DOOR
HMD-S INTERIOR, SOUND RATED, EXTRA HEAVY DUTY DOOR
HMD-F INTERIOR, FIRE RATED, HEAVY DUTY DOOR
HMD-L INTERIOR HEAVY DUTY DOOR WITH LOUVER
HMD-E EXTERIOR, SOUND RATED, EXTRA HEAVY DUTY DOOR WITH FE/BR RESISTANCE

ALL DOOR FRAMES TO MATCH THE SOUND RESISTANCE AND FIRE RATING OF DOORS.

REFER TO DRAWING SA-500 FOR DOOR TYPES, FRAME TYPES AND DETAILS.

THESE DRAWINGS ARE "NOT APPROVED FOR CONSTRUCTION" SINCE THESE ARE BASED UPON ASSUMED CONDITIONS. THE CONTRACTOR SHALL NOT PROCEED WITH CONSTRUCTION UNTIL THE ASSUMED CONDITIONS ARE VALIDATED AND APPROVAL IS RECEIVED FROM THE CONTRACTING OFFICER.

REGISTERED ARCHITECT — STATE OF NEW YORK

2/6/2012

UNLESS OTHERWISE NOTED, LINEAR DIMENSIONS SHOWN ARE IN MILLIMETERS.

DESIGN COMPLETE SUBMITTAL

SYMB	DESCRIPTION	DATE	APR
FNL	DESIGN COMPLETE SUBMITTAL	02-06-12	WESR

DESIGNED BY: PTO
DATE: 02-06-2012
DRAWN BY: NLW
SUBMITTED BY: TETRA TECH
CHECKED BY: KCB
FILE NO.: AF1202A-A600SC

TETRA TECH

US Army Corps of Engineers
Middle East District

COMMAND & CONTROL FACILITY
KANDAHAR AIR FIELD, AFGHANISTAN
COMMAND & CONTROL FACILITY
DOOR SCHEDULE

SHEET REFERENCE NUMBER:
A
A-600

W:\23308\127-23308-11004\CAD\MED Drawings\AF1202\AF1202A\Architectural\AF1202A-A600SC.dwg 3/7/2012 9:29:11 AM Jeffers, Scott

FINISH SCHEDULE – GROUND FLOOR

ROOM NO.	NAME	FLOOR FINISH	BASE	WALLS NORTH	EAST	SOUTH	WEST	WALL PANEL (# PER ROOM)	CEILINGS FINISH	NOTES
101	SOTF CDR	RFS/CPT	RB	P–1	P–1	P–1	P–1	AWP (6)	ACT	
102	SOTF XO	RFS/CPT	RB	P–1	P–1	P–1	P–1	AWP (1)	ACT	
103	SOTF CSM	RFS/CPT	RB	P–1	P–1	P–1	P–1	AWP (1)	ACT	
104	SOTF JAG	RFS/CPT	RB	P–1	P–1	P–1	P–1	AWP (1)	ACT	
105	ADJ RCP	RFS/CPT	RB	P–1	P–1	P–1	P–1	AWP (1)	ACT	
106	JVB	RFS/CPT	RB	P–1	P–1	P–1	P–1	AWP (1)	ACT	
107	JOC	RFS/CPT	RB	P–1	P–1	P–1	P–1	SEE DWG. A–402	ACT	
108	OPCEN DIR	RFS/CPT	RB	P–1	P–1	P–1	P–1	AWP (1)	ACT	
109	OPCEN SGM	RFS/CPT	RB	P–1	P–1	P–1	P–1	AWP (1)	ACT	
110	S2	RFS/CPT	RB	P–1	P–1	P–1	P–1	AWP (1)	ACT	
111	J35 OFF	RFS/CPT	RB	P–1	P–1	P–1	P–1	AWP (8)	ACT	
112	ELEC	SC	–	P–1	P–1	P–1	P–1	–	EPS	
114	LNO	RFS/CPT	RB	P–1	P–1	P–1	P–1	AWP (7)	ACT	
115	STORAGE	RFS/CPT	RB	P–1	P–1	P–1	P–1	–	ACT	
116	FUTURE PLANS	RFS/CPT	RB	P–1	P–1	P–1	P–1	AWP (16)	ACT	
117	BREAK	RFS/VCT	RB	P–1	P–1	P–1	P–1	–	ACT/ P–3	PAINT SOFFIT
118	J.C.	RFS/CFT*	RB	P–1	P–1	P–1	P–1		EPS	
119	MECH	SC	–	P–1	P–1	P–1	P–1	–	EPS	
120	WOMENS TOILET	RFS/CFT*	CT**	CWT**	CWT**	CWT**	CWT**	–	P–3	
121	MENS TOILET	RFS/CFT*	CT**	CWT**	CWT**	CWT**	CWT**	–	P–3	
122	CORR.	RFS/HPL	RB	P–1	P–1	P–1	P–1	–	ACT/ P–3	PAINT SOFFIT
123	CORR.	RFS/VCT	RB	P–1	P–1	P–1	P–1	–	ACT/ P–3	PAINT SOFFIT
124	CORR.	RFS/VCT	RB	P–1	P–1	P–1	P–1	–	ACT/ P–3	PAINT SOFFIT
125	ECP	RFS/VCT	RB	P–1	P–1	P–1	P–1	–	ACT	
126	ECP	RFS/VCT	RB	P–1	P–1	P–1	P–1	–	ACT	
127	SIGCEN	RFS/CPT	RB	P–1	P–1	P–1	P–1	AWP (1)	ACT	
128	SIGCEN NCOIC	RFS/CPT	RB	P–1	P–1	P–1	P–1	AWP (1)	ACT	
129	COMMS.	RFS/HPL	RB	P–1	P–1	P–1	P–1	–	EPS	
130	CORR.	RFS/VCT	RB	P–1	P–1	P–1	P–1	–	ACT/ P–3	PAINT SOFFIT
131	D.V. OFF	RFS/CPT	RB	P–1	P–1	P–1	P–1	AWP (1)	ACT	
132	CORR.	RFS/VCT	RB	P–1	P–1	P–1	P–1	–	ACT/ P–3	PAINT SOFFIT

LEGEND

FLOORS		WALLS		BASE		CEILING	
CFT	Ceramic Mosaic Tile	AWP	Acoustical Wall Panel	RB	Rubber Flat Base	EPS	Exposed Painted Structure
CPT	Carpet	P	Paint	CT	Ceramic Tile Base	ACT	Acoustic Ceiling Tile
HPL	High Pressure Laminate	CWT	Ceramic Wall Tile			P	Paint
RFS	Raised Floor System						
RST	Rubber Stair Tread						
SC	Sealed Steel Troweled Concrete						
VCT	Vinyl Composition Tile						

GENERAL NOTE: ALL DOOR FRAMES, PAINTED TRIM, AND PAINTED DOORS TO RECEIVE P–2, CEILINGS P–3
PAINT ALL EXPOSED COLUMNS. DO NOT PAINT METAL WALLS.

* THIN SET TILE
** THICK SET TILE
FOR ALL FLOORING TRANSITION DETAILS SEE DRAWING SA–504

FINISH SCHEDULE – FIRST FLOOR

ROOM NO.	NAME	FLOOR FINISH	BASE	WALLS NORTH	EAST	SOUTH	WEST	WALL PANEL (# PER ROOM)	CEILINGS FINISH	NOTES
201	JWICS– CONF.	RFS/CPT	RB	P–1	P–1	P–1	P–1	–	ACT	
202	STRAT AWARENESS	RFS/CPT	RB	P–1	P–1	P–1	P–1	AWP (10)	ACT	
203	SAR	RFS/CPT	RB	P–1	P–1	P–1	P–1	AWP (5)	ACT	
204	HUMINT	RFS/CPT	RB	P–1	P–1	P–1	P–1	AWP (8)	ACT	
205	3X SHOP	RFS/CPT	RB	P–1	P–1	P–1	P–1	AWP (8)	ACT	
206	3X OFFICE	RFS/CPT	RB	P–1	P–1	P–1	P–1	AWP (1)	ACT	
207	IMAGERY	RFS/CPT	RB	P–1	P–1	P–1	P–1	AWP (4)	ACT	
208	COMM. CENTER	RFS/CPT	RB	P–1	P–1	P–1	P–1	AWP (20)	ACT	
209	COMMS	RFS/HPL	RB	P–1	P–1	P–1	P–1	–	EPS	
210	CONF.	RFS/CPT	RB	P–1	P–1	P–1	P–1	–	ACT	
213	BREAK	RFS/VCT	RB	P–1	P–1	P–1	P–1	–	ACT/ P–3	PAINT SOFFIT
215	J.C.	RFS/CFT*	RB	P–1	P–1	P–1	P–1	–	EPS	
216	MENS TOILET	RFS/CFT*	CT**	CWT**	CWT**	CWT**	CWT**	–	P–3	
217	WOMENS TOILET	RFS/CFT*	CT**	CWT**	CWT**	CWT**	CWT**	–	P–3	
218	CORR.	RFS/VCT	RB	P–1	P–1	P–1	P–1	–	ACT/P–3	PAINT SOFFIT
219	CORR.	RFS/VCT	RB	P–1	P–1	P–1	P–1	–	ACT/P–3	PAINT SOFFIT
220	CORR.	RFS/VCT	RB	P–1	P–1	P–1	P–1	–	ACT/P–3	PAINT SOFFIT
221	ELEC.	RFS/VCT	RB	P–1	P–1	P–1	P–1	–	EPS	
222	ECP	RFS/VCT	RB	P–1	P–1	P–1	P–1	–	P–3	
223	ECP	RFS/VCT	RB	P–1	P–1	P–1	P–1	–	P–3	

ACOUSTICAL WALL PANEL (AWP) NOTES

TYP. PANEL SIZE FOR ROOMS OTHER THAN JOC 114 ARE TO BE 1200mm W X 1200mm H X 25mm D PANEL PLACEMENT FOR VARIOUS ROOMS OTHER THAN JOC TO BE COORDINATED ON SITE WITH CONTRACTING OFFICER.

PANELS IN EACH ROOM ARE TO BE MOUNTED 1200mm AFF TO THE BOTTOM AND CENTERED WALL TO WALL AND EVENLY PLACED THROUGHOUT SPACE. LOCATIONS MAY NEED TO SHIFT TO ACCOMMODATE LOOSE FURNITURE (NIC). MOUNTING OF WALL PANELS MUST BE COORDINATED W/ ALL ELECTRICAL DEVICES.

SIZE AND PLACEMENT VARIES FOR JOC 107, SEE A–402 FOR PANEL SIZE AND PLACEMENT.

THESE DRAWINGS ARE "NOT APPROVED FOR CONSTRUCTION" SINCE THESE ARE BASED UPON ASSUMED CONDITIONS. THE CONTRACTOR SHALL NOT PROCEED WITH CONSTRUCTION UNTIL THE ASSUMED CONDITIONS ARE VALIDATED AND APPROVAL IS RECEIVED FROM THE CONTRACTING OFFICER.

REGISTERED ARCHITECT
STATE OF NEW YORK
2/6/2012

UNLESS OTHERWISE NOTED, LINEAR DIMENSIONS SHOWN ARE IN MILLIMETERS.

DESIGN COMPLETE SUBMITTAL

SYMB	DESCRIPTION	DATE	
FNL	DESIGN COMPLETE SUBMITTAL	02–06–12	WESR

DESIGNED BY: PTO
DATE: 02–06–2012
DRAWN BY: MSV1
SUBMITTED BY: TETRA TECH
CHECKED BY: MHH
FILE NO.: AF1202A–A640SC

TETRA TECH

US Army Corps of Engineers
Middle East District

COMMAND & CONTROL FACILITY
KANDAHAR AIR FIELD, AFGHANISTAN
COMMAND & CONTROL FACILITY
INTERIOR FINISH SCHEDULE

SHEET REFERENCE NUMBER:
A
A–640

W:\23308\127–23308–11004\CAD\MED Drawings\AF1202\AF1202A\Architectural\AF1202A–A640SC.dwg 3/7/2012 9:29:49 AM Jeffers, Scott

INTERIOR SIGNAGE SCHEDULE – GROUND FLOOR

ROOM NO.	SIGN NO.	ROOM NAME / SIGN TEXT	SIGN TYPE	QUANTITY	NOTES
101	101	SOTF CDR	TYPE 2	1	
102	102	SOTF XO	TYPE 2	1	
103	103	SOFT CSM	TYPE 2	1	
104	104	SOTF JAG	TYPE 2	1	
105	105	ADJ RCP	TYPE 2	1	
106	106	JVB	TYPE 2	1	
107	107	JOC	TYPE 2, 3	4 (TYPE 2), 2 (TYPE 3)	
108	108	OPCEN DIR	TYPE 2	1	
109	109	OPCEN SGM	TYPE 2	1	
110	110	S2	TYPE 2	1	
111	111	J35 OFF	TYPE 2	1	
112	112	ELEC	TYPE 2	1	
114	114	LNO	TYPE 2	1	
115	115	STORAGE	TYPE 2	1	
116	116	FUTURE PLANS	TYPE 2	1	
117	117	BREAK	TYPE 2	1	
118	118	J.C.	TYPE 2	1	
119	119	MECH	TYPE 2, 3	1 OF EACH	
120	120	WOMENS TOILET	TYPE 1	1	
121	121	MENS TOILET	TYPE 1	1	
122	122	CORR.	TYPE 2, 3	1 OF EACH	
123	123	CORR.	TYPE 2, 3	1 (TYPE 2), 2 (TYPE 3)	
124	124	CORR.	TYPE 2, 3	1 OF EACH	
125	125	ECP	TYPE 2	1	
126	126	ECP	TYPE 2	1	
127	127	SIGCEN	TYPE 2	1	
128	128	SIGCEN NCOIC	TYPE 2	1	
129	129	COMMS.	TYPE 2	1	
130	130	CORR.	TYPE 2, 3	1 OF EACH	
131	131	D.V. OFF	TYPE 2	1	
132	132	CORR.	TYPE 2, 3	1 OF EACH	
1	1	STAIR 1	TYPE 4	2	1 AT EACH LEVEL
2	2	STAIR 2	TYPE 4	2	1 AT EACH LEVEL

INTERIOR SIGNAGE SCHEDULE – FIRST FLOOR

ROOM NO.	SIGN NO.	ROOM NAME / SIGN TEXT	SIGN TYPE	QUANTITY	NOTES
201	201	JWICS– CONF.	TYPE 2	1	
202	202	STRAT AWARENESS	TYPE 2	1	
203	203	SAR	TYPE 2	1	
204	204	HUMINT	TYPE 2	1	
205	205	3X SHOP	TYPE 2	1	
206	206	3X OFFICE	TYPE 2	1	
207	207	IMAGERY	TYPE 2	1	
208	208	COMM. CENTER	TYPE 2	1	
209	209	COMMS	TYPE 2, 3	1 OF EACH	
210	210	CONF.	TYPE 2	1	
213	213	BREAK	TYPE 2	1	
215	215	J.C.	TYPE 2	1	
216	216	MENS TOILET	TYPE 1	1	
217	217	WOMENS TOILET	TYPE 1	1	
218	218	CORR.	TYPE 2, 3	1 OF EACH	
219	219	CORR.	TYPE 2, 3	1, 2	
220	220	CORR.	TYPE 2, 3	1 OF EACH	
221	221	ELEC.	TYPE 2	1	
222	222	ECP	TYPE 2	1	
223	223	ECP	TYPE 2	1	

SEE DWG SA–510 FOR SIGNAGE TYPES.

THESE DRAWINGS ARE "NOT APPROVED FOR CONSTRUCTION" SINCE THESE ARE BASED UPON ASSUMED CONDITIONS. THE CONTRACTOR SHALL NOT PROCEED WITH CONSTRUCTION UNTIL THE ASSUMED CONDITIONS ARE VALIDATED AND APPROVAL IS RECEIVED FROM THE CONTRACTING OFFICER.

REGISTERED ARCHITECT STATE OF NEW YORK

2/6/2012

UNLESS OTHERWISE NOTED, LINEAR DIMENSIONS SHOWN ARE IN MILLIMETERS.

DESIGN COMPLETE SUBMITTAL

SYMB	DESCRIPTION	DATE	
FNL	DESIGN COMPLETE SUBMITTAL	02–06–12	WESR

DESIGNED BY: PTO
DATE: 02–06–2012
DRAWN BY: MSV1
SUBMITTED BY: TETRA TECH
CHECKED BY: MHH
FILE NO.: AF1202A–A641SC

TETRA TECH

US Army Corps of Engineers Middle East District

COMMAND & CONTROL FACILITY
KANDAHAR AIR FIELD, AFGHANISTAN
COMMAND & CONTROL FACILITY
INTERIOR SIGNAGE SCHEDULE

SHEET REFERENCE NUMBER:
A
A–641

W:\23308\127–23308–11004\CAD\MED Drawings\AF1202\AF1202A\Architectural\AF1202A–A641SC.dwg 3/7/2012 9:30:24 AM Jeffers, Scott

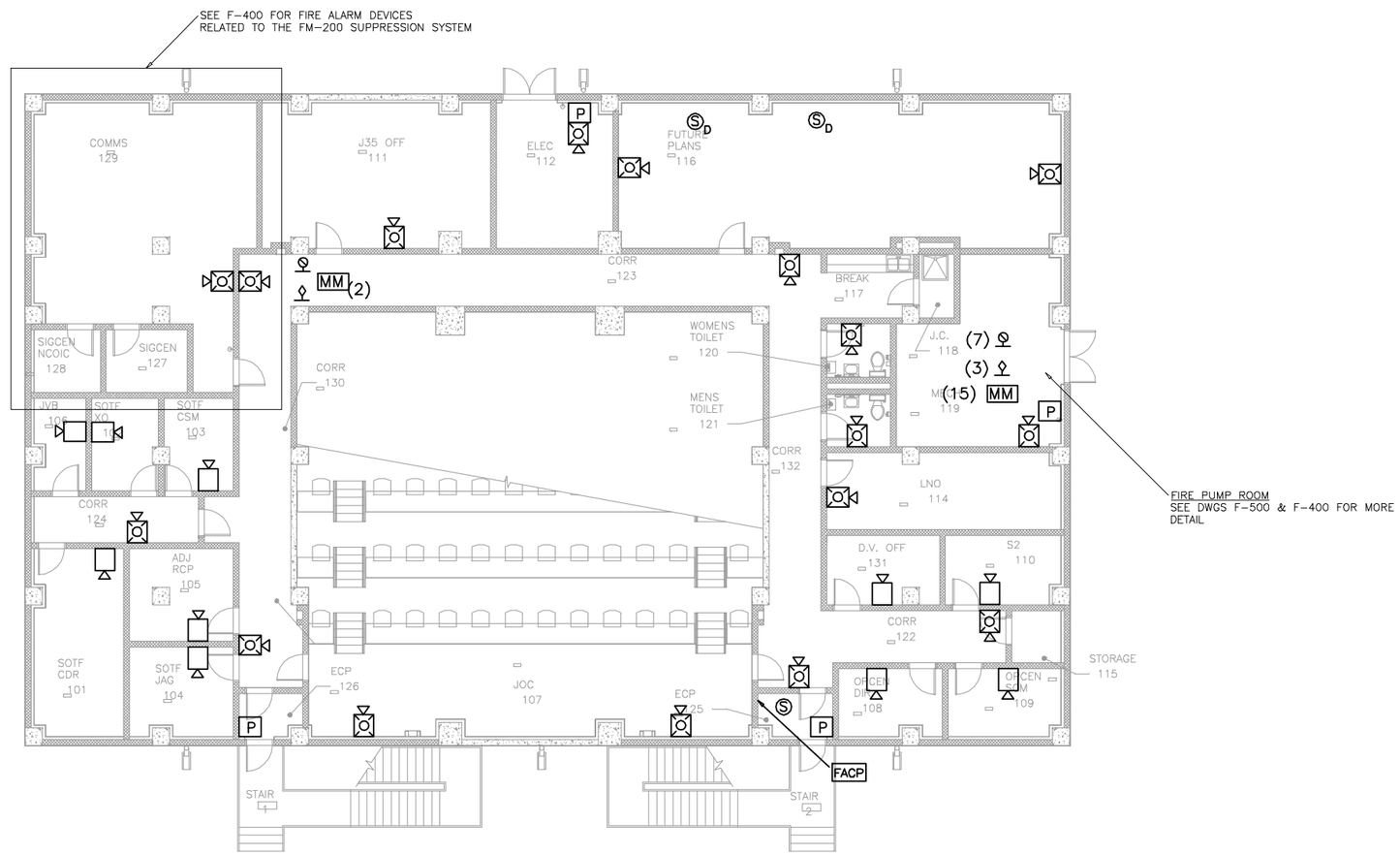

FIRE ALARM PLAN
SCALE 1:100

1 0 1 2 3 4 5 6 7 8 9
1:100

THESE DRAWINGS ARE "NOT APPROVED FOR CONSTRUCTION" SINCE THESE ARE BASED UPON ASSUMED CONDITIONS. THE CONTRACTOR SHALL NOT PROCEED WITH CONSTRUCTION UNTIL THE ASSUMED CONDITIONS ARE VALIDATED AND APPROVAL IS RECEIVED FROM THE CONTRACTING OFFICER.

COMMONWEALTH OF MASSACHUSETTS
JEFFREY L. McMANUS
FIRE PROTECTION
No. 41002
REGISTERED PROFESSIONAL ENGINEER
2/6/2012

UNLESS OTHERWISE NOTED, LINEAR DIMENSIONS SHOWN ARE IN METERS.

DESIGN COMPLETE SUBMITTAL

SYMB	DESCRIPTION	DATE	APR
FNL	DESIGN COMPLETE SUBMITTAL	02-06-12	JLD

DESIGNED BY: JLD
DATE: 02-06-2012
DRAWN BY: JLD
SUBMITTED BY: TETRA TECH / FRM
CHECKED BY: WMC
FILE NO.: AF1202A-F100PN

TETRA TECH

US Army Corps of Engineers
Middle East District

COMMAND & CONTROL FACILITY
KANDAHAR AIR FIELD, AFGHANISTAN
COMMAND & CONTROL FACILITY
FIRE ALARM PLAN
GROUND FLOOR

SHEET REFERENCE NUMBER:
A
F-100

W:\23308\127-23308-11004\CAD\MED Drawings\AF1202\AF1202A\Fire Protection\AF1202A-F100PN.dwg 3/7/2012 9:31:45 AM Jeffers, Scott

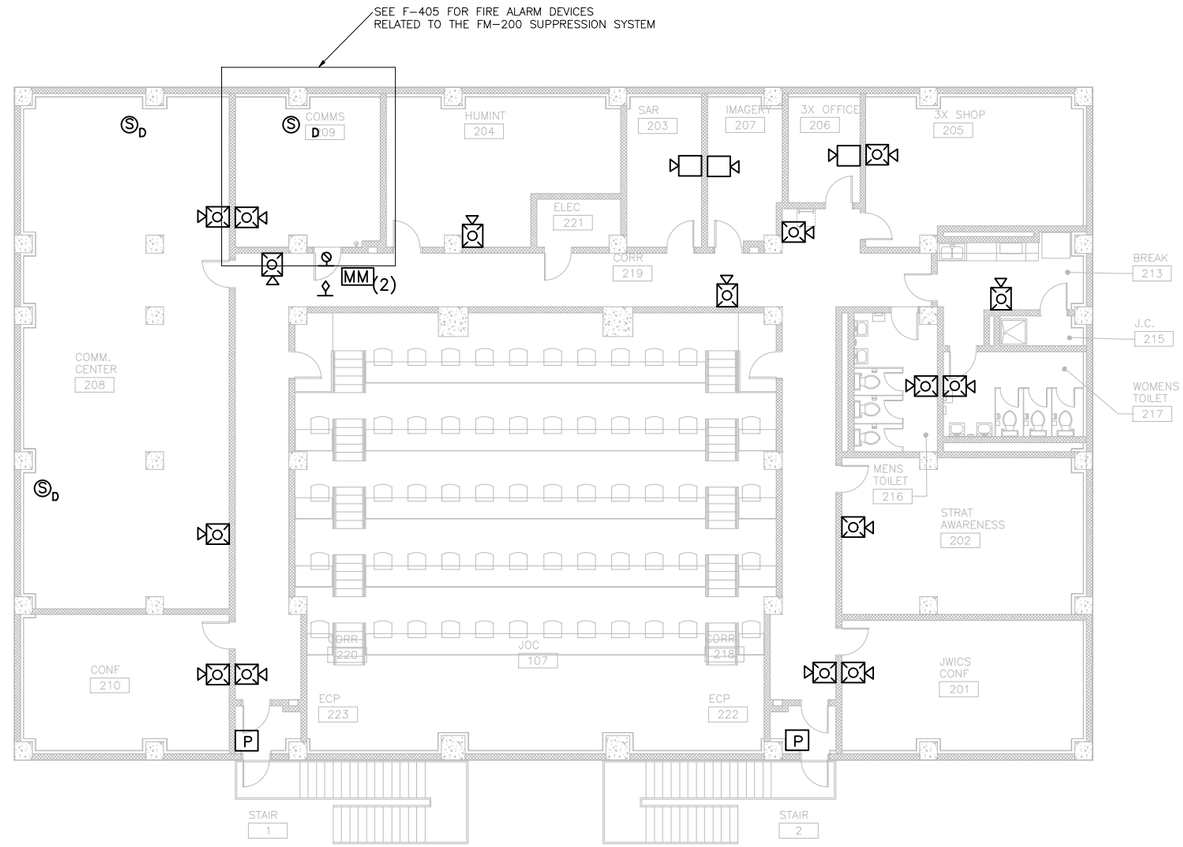

FIRE ALARM PLAN
SCALE 1:100

1:100

THESE DRAWINGS ARE "NOT APPROVED FOR CONSTRUCTION" SINCE THESE ARE BASED UPON ASSUMED CONDITIONS. THE CONTRACTOR SHALL NOT PROCEED WITH CONSTRUCTION UNTIL THE ASSUMED CONDITIONS ARE VALIDATED AND APPROVAL IS RECEIVED FROM THE CONTRACTING OFFICER.

COMMONWEALTH OF MASSACHUSETTS
JEFFREY L. ROMANO
FIRE PROTECTION
No. 41002
REGISTERED PROFESSIONAL ENGINEER
2/6/2012

UNLESS OTHERWISE NOTED, LINEAR DIMENSIONS SHOWN ARE IN METERS.

DESIGN COMPLETE SUBMITTAL

FNL	DESIGN COMPLETE SUBMITTAL	02-06-12	JLD
SYMB	DESCRIPTION	DATE	APR

DESIGNED BY: JLD
DATE: 02-06-2012
DRAWN BY: JLD
SUBMITTED BY: TETRA TECH / FRM
CHECKED BY: WMC
FILE NO.: AF1202A-F101PN

TETRA TECH

US Army Corps of Engineers
Middle East District

COMMAND & CONTROL FACILITY
KANDAHAR AIR FIELD, AFGHANISTAN
COMMAND & CONTROL FACILITY
FIRE ALARM PLAN
FIRST FLOOR

SHEET REFERENCE NUMBER:
A
F-101

W:\23308\127-23308-11004\CAD\MED Drawings\AF1202\AF1202A\Fire Protection\AF1202A-F101PN.dwg 3/7/2012 9:32:55 AM Jeffers, Scott

NFPA 101 OCCUPANCIES:

- ASSEMBLY USE (IBC GROUP A-3)
- STORAGE USE (IBC GROUP S-1)
- BUSINESS USE (IBC GROUP B)
- 1 HOUR FRR WALL

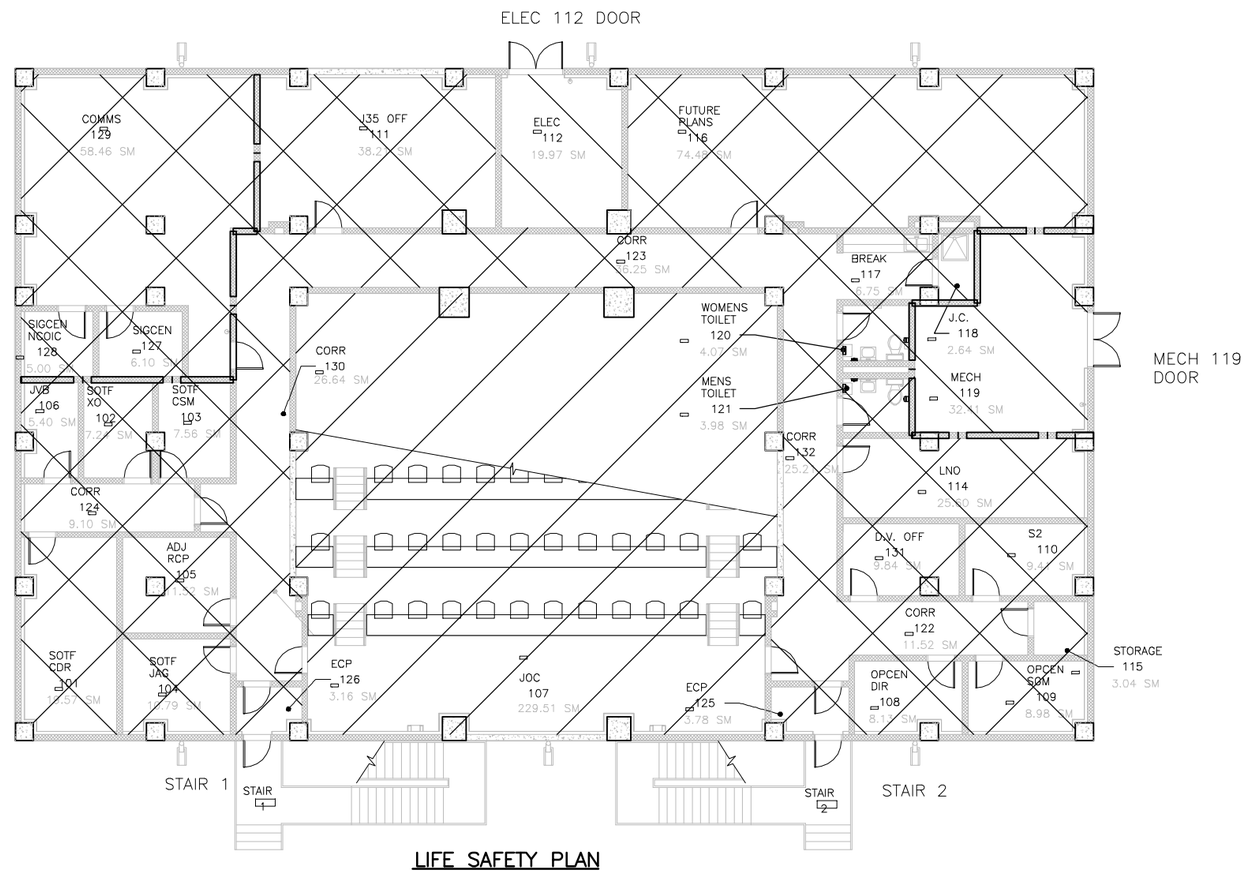

LIFE SAFETY PLAN

SCALE 1:100

BUILDING CODE AND CONSTRUCTION DATA

APPLICABLE CODES:

THE UNIFIED FACILITIES CRITERIA (UFC 3-600-01), JULY 2009
INTERNATIONAL BUILDING CODE (IBC), 2009 EDITION
INTERNATIONAL FIRE CODE (IFC), 2009 EDITION.
THE NATIONAL FIRE PROTECTION ASSOCIATION (NFPA) CODES & STANDARDS, INCLUDING BUT NOT LIMITED TO:
- NFPA 101 – THE LIFE SAFETY CODE, 2009
- NFPA 10 – STANDARD FOR PORTABLE FIRE EXTINGUISHERS, 2010
- NFPA 13 – STANDARD FOR THE INSTALLATION OF SPRINKLER SYSTEMS, 2010
- NFPA 70 – THE NATIONAL ELECTRICAL CODE, 2011
- NFPA 72 – NATIONAL FIRE ALARM AND SIGNALING CODE, 2010

NUMBER OF FLOORS:	2 STORY
STRUCTURAL SYSTEM:	CONCRETE FRAME
FLOOR CONSTRUCTION:	GROUND FLOOR: SLAB ON GRADE FIRST FLOOR: CAST IN PLACE NON-COMPOSITE CONCRETE SUPPORTED ON CONCRETE BEAMS
CONSTRUCTION CLASS:	II-B, NON-COMBUSTIBLE, NON-PROTECTED
USE GROUP:	A-3 (ASSEMBLY) / B (BUSINESS) (MOST RESTRICTIVE REQUIREMENTS USED PER NFPA 101-6.1.14.3.2)
INTERIOR FINISH:	CLASS C
SPRINKLER (PER NFPA 13):	YES
FIRE ALARM / MASS NOTIFICATION:	YES
FIRE EXTINGUISHERS:	YES, MINIMUM 4A : 60B : C

HEIGHT AND AREA LIMITATIONS (PER IBC):

ALLOWABLE HEIGHT:	3 STORIES (BASED ON SPRINKLER INCREASE)
ACTUAL HEIGHT:	2 STORIES
ALLOWABLE AREA:	5690 SM (1625.75 SM WITHOUT ANY INCREASES)
INCREASE FOR SPRINKLERS:	200%
INCREASE FOR FRONTAGE:	50%
ACTUAL AREA:	790 SM GROUND FLOOR 790 SM FIRST FLOOR

FIRE RESISTANCE RATINGS:

0 HOUR:	STRUCTURAL FRAMING (COLUMNS, GIRDERS, TRUSSES)
0 HOUR:	BEARING WALLS
0 HOUR:	NON BEARING WALLS (INTERIOR/EXTERIOR)
0 HOUR:	ROOF CONSTRUCTION
0 HOUR:	STORAGE ROOMS > 9.3 SM
1 HOUR:	INFORMATION TECHNOLOGY ROOMS, WALLS AND FLOORS/CEILINGS (STRUCTURAL BEAMS AND COLUMNS SUPPORTING RATED CONSTRUCTION WILL HAVE 1-HOUR FIRE RESISTANCE RATING)
1 HOUR:	FIRE PUMP ROOM (MECH 119)

OCCUPANT LOAD/EGRESS CAPACITY REQUIRED

SEE EGRESS TABLES

EGRESS:

EGRESS WIDTH PER OCCUPANT	
DOORS, CORRIDORS:	0.0050 M
STAIRS	0.0076 M
NUMBER OF EXITS REQUIRED:	2
EGRESS CAPACITY PER 900 MM DOOR:	165 PEOPLE
EGRESS CAPACITY PER 1200 MM STAIR:	157 PEOPLE
EGRESS CAPACITY PER 1510 MM STAIR:	198 PEOPLE
MAXIMUM TRAVEL DISTANCES:	
FOR ROW OF SEATS SERVED BY ONE AISLE	9.1 M
DEAD-END AISLES	6.1 M
COMMON PATH OF TRAVEL	6.1 M
COMMON PATH OF TRAVEL (<50 PEOPLE)	23 M
TO AN EXIT DOOR	76 M
MAX. DEAD END LENGTH	6.1 M

CALCULATED OCCUPANT LOAD (IN ACCORDANCE WITH NFPA 101-2009)

AREA DESCRIPTION	OCCUPANT LOAD FACTOR	AREA	OCCUPANT LOAD
	[SQ. M. PER PERSON]	[SQ. M.]	[PEOPLE]
ASSEMBLY USE (FLOOR OF JOC)	1.4	67	48
ASSEMBLY SEATING (JOC)	ACTUAL SEATS	NA	60
BUSINESS	9.3	487	52
STORAGE	46.5	54	2
	TOTAL OCCUPANT LOAD=		162

CALCULATED EXIT CAPACITY (IN ACCORDANCE WITH NFPA 101-2009)

DESCRIPTION	CLEAR WIDTH (D=DOOR / S=STAIR)	CAPACITY FACTOR		CAPACITY
	[MM]	[MM PER PERSON]		[PEOPLE]
STAIR 1	D 825	5	165	165
	1510	7.6	198	
STAIR 2	D 825	5	165	165
	1510	7.6	198	
MECH 119 DOOR	D 825	5	165	165
ELEC 114 DOOR	D 825	5	165	165
	TOTAL EGRESS CAPACITY =			660

1 0 1 2 3 4 5 6 7 8 9
1:100

THESE DRAWINGS ARE "NOT APPROVED FOR CONSTRUCTION" SINCE THESE ARE BASED UPON ASSUMED CONDITIONS. THE CONTRACTOR SHALL NOT PROCEED WITH CONSTRUCTION UNTIL THE ASSUMED CONDITIONS ARE VALIDATED AND APPROVAL IS RECEIVED FROM THE CONTRACTING OFFICER.

COMMONWEALTH OF MASSACHUSETTS
JEFFREY A. DEMANE
FIRE PROTECTION
No. 41002
REGISTERED PROFESSIONAL ENGINEER
2/6/2012

UNLESS OTHERWISE NOTED, LINEAR DIMENSIONS SHOWN ARE IN METERS.

DESIGN COMPLETE SUBMITTAL

SYMB	DESCRIPTION	DATE	APR
FNL	DESIGN COMPLETE SUBMITTAL	02-06-12	JLD

DESIGNED BY: JLD
DATE: 02-06-2012
DRAWN BY: JLD
SUBMITTED BY: TETRA TECH / FRM
CHECKED BY: WMC
FILE NO.: AF1202A-F105PN

TETRA TECH

US Army Corps of Engineers
Middle East District

COMMAND & CONTROL FACILITY
KANDAHAR AIR FIELD, AFGHANISTAN
COMMAND & CONTROL FACILITY
LIFE SAFETY PLAN
GROUND FLOOR

SHEET REFERENCE NUMBER:
A
F-105

W:\23308\127-23308-11004\CAD\MED Drawings\AF1202\AF1202A\Fire Protection\AF1202A-F105PN.dwg 3/7/2012 9:33:28 AM Jeffers, Scott

NFPA 101 OCCUPANCIES:

- ASSEMBLY USE (IBC GROUP A-3)
- STORAGE USE (IBC GROUP S-1)
- BUSINESS USE (IBC GROUP B)
- 1 HOUR FRR WALL

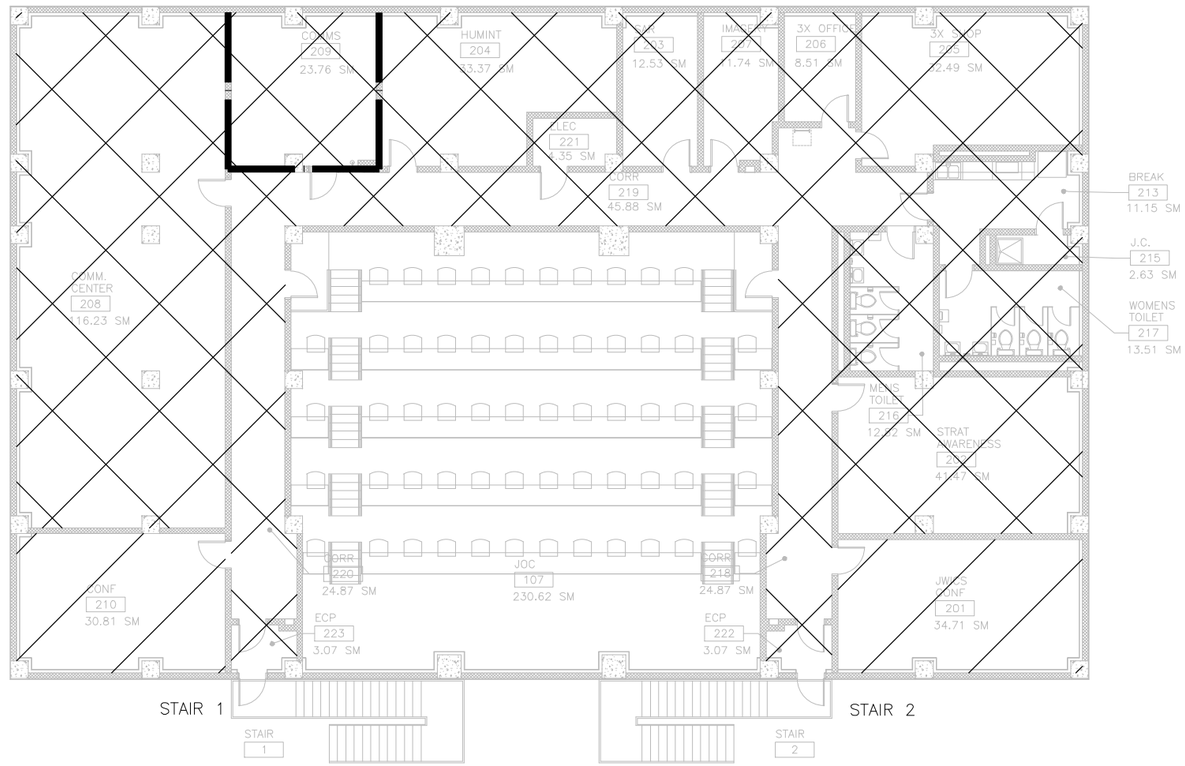

LIFE SAFETY PLAN

SCALE 1:100

CALCULATED OCCUPANT LOAD (IN ACCORDANCE WITH NFPA 101-2009)			
AREA DESCRIPTION	OCCUPANT LOAD FACTOR	AREA	OCCUPANT LOAD
	[SQ. M. PER PERSON]	[SQ. M.]	[PEOPLE]
ASSEMBLY USE (FLOOR OF JOC)	1.4	68	49
BUSINESS	9.3	491	53
	TOTAL OCCUPANT LOAD =		102

NOTE: ASSEMBLY SEATING OCCUPANTS ARE SHOWN ON THE GROUND FLOOR

CALCULATED EXIT CAPACITY (IN ACCORDANCE WITH NFPA 101-2009)				
DESCRIPTION	CLEAR WIDTH (D=DOOR / S=STAIR)	CAPACITY FACTOR		CAPACITY
	[MM]	[MM PER PERSON]		[PEOPLE]
STAIR 1	D 825	5	165	
	1200	7.6	157	157
STAIR 2	D 825	5	165	
	1200	7.6	157	157
	TOTAL EGRESS CAPACITY =			314

1 0 1 2 3 4 5 6 7 8 9

1:100

THESE DRAWINGS ARE "NOT APPROVED FOR CONSTRUCTION" SINCE THESE ARE BASED UPON ASSUMED CONDITIONS. THE CONTRACTOR SHALL NOT PROCEED WITH CONSTRUCTION UNTIL THE ASSUMED CONDITIONS ARE VALIDATED AND APPROVAL IS RECEIVED FROM THE CONTRACTING OFFICER.

COMMONWEALTH OF MASSACHUSETTS
JEFFREY L. McNAMES
FIRE PROTECTION
No. 41002
REGISTERED PROFESSIONAL ENGINEER

2/6/2012

UNLESS OTHERWISE NOTED, LINEAR DIMENSIONS SHOWN ARE IN METERS.

DESIGN COMPLETE SUBMITTAL

SYMB	DESCRIPTION	DATE	APR
FNL	DESIGN COMPLETE SUBMITTAL	02-06-12	JLD

DESIGNED BY: JLD
DATE: 02-06-2012
DRAWN BY: JLD
SUBMITTED BY: TETRA TECH / FRM
CHECKED BY: WMC
FILE NO.: AF1202A-F106PN

TETRA TECH

US Army Corps of Engineers
Middle East District

COMMAND & CONTROL FACILITY
KANDAHAR AIR FIELD, AFGHANISTAN
COMMAND & CONTROL FACILITY
LIFE SAFETY PLAN
FIRST FLOOR

SHEET REFERENCE NUMBER:
A
F-106

W:\23308\127-23308-11004\CAD\MED Drawings\AF1202\AF1202A\Fire Protection\AF1202A-F106PN.dwg 3/7/2012 9:34:02 AM Jeffers, Scott

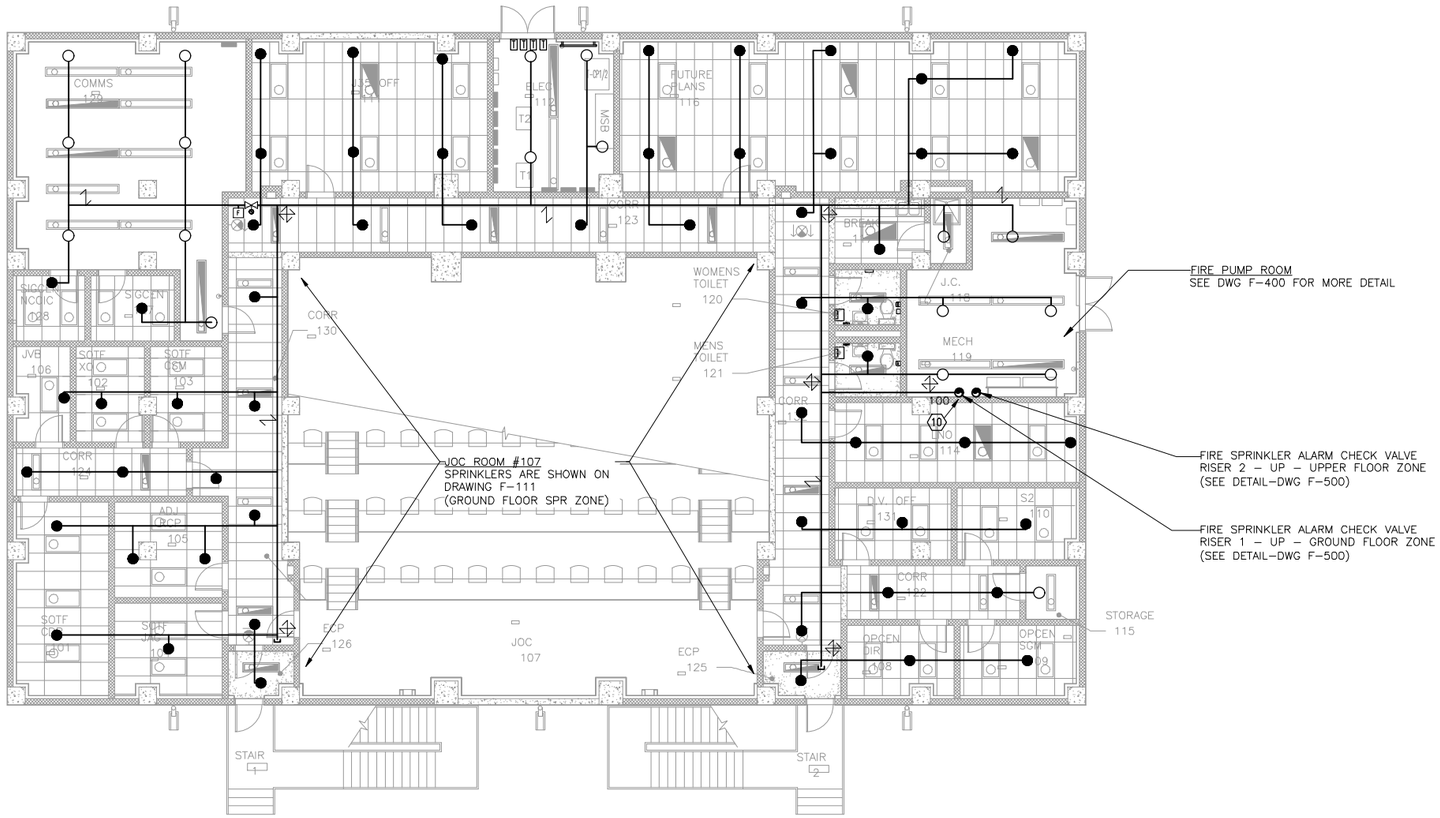

FIRE SPRINKLER PLAN – GROUND FLOOR

SCALE 1:100

1 0 1 2 3 4 5 6 7 8 9

1:100

THESE DRAWINGS ARE "NOT APPROVED FOR CONSTRUCTION" SINCE THESE ARE BASED UPON ASSUMED CONDITIONS. THE CONTRACTOR SHALL NOT PROCEED WITH CONSTRUCTION UNTIL THE ASSUMED CONDITIONS ARE VALIDATED AND APPROVAL IS RECEIVED FROM THE CONTRACTING OFFICER.

COMMONWEALTH OF MASSACHUSETTS
JEFFREY L. BOMMAE
FIRE PROTECTION
No. 41002
REGISTERED PROFESSIONAL ENGINEER

2/6/2012

UNLESS OTHERWISE NOTED, LINEAR DIMENSIONS SHOWN ARE IN MILLIMETERS.

DESIGN COMPLETE SUBMITTAL

SYMB	DESCRIPTION	DATE	APR
FNL	DESIGN COMPLETE SUBMITTAL	02-06-12	JLD

DESIGNED BY: JLD
DATE: 02-06-2012
DRAWN BY: JLD
SUBMITTED BY: TETRA TECH / FRM
CHECKED BY: WMC
FILE NO.: AF1202A-F110PN

TETRA TECH

US Army Corps of Engineers
Middle East District

COMMAND & CONTROL FACILITY
KANDAHAR AIR FIELD, AFGHANISTAN
COMMAND & CONTROL FACILITY
FIRE SUPPRESSION PLAN
GROUND FLOOR

SHEET REFERENCE NUMBER:
A
F–110

W:\23308\127-23308-11004\CAD\MED Drawings\AF1202\AF1202A\Fire Protection\AF1202A-F110PN.dwg 3/7/2012 9:34:46 AM Jeffers, Scott

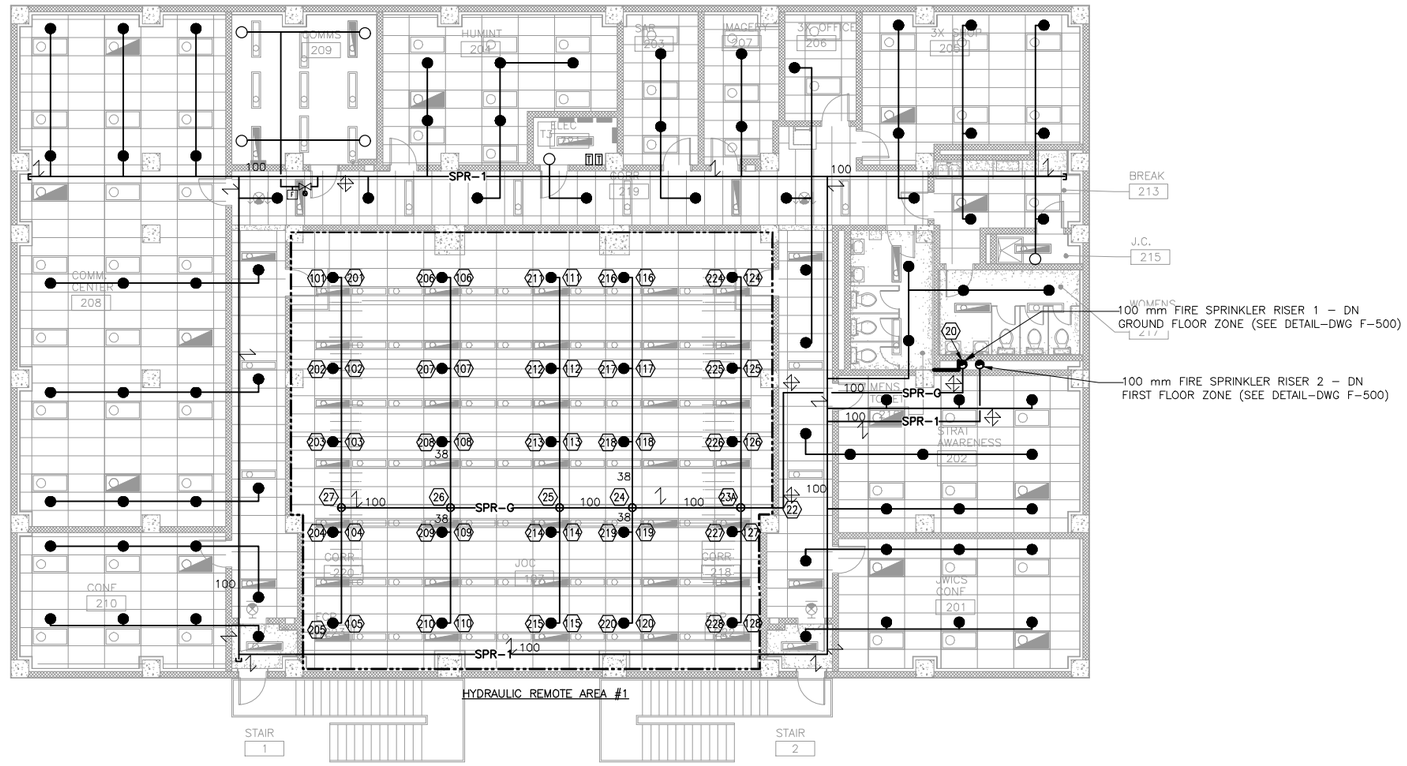

FIRE SPRINKLER PLAN – FIRST FLOOR

SCALE 1:100

SYSTEM HYDRAULIC INFORMATION
C & C (BUILDING C) – FIRST FLOOR– JOC AUDITORIUM CEILING
ORDINARY HAZARD GROUP 1
DESIGN AREA = 280 SM (ACTUAL: 232.2 SM)
DESIGN DENSITY = 7.24 L/MIN/SM
SYSTEM DEMAND = 1812 L/MIN @ 271 KPA (NOTE: INCLUDES NO HOSE STREAM ALLOWANCE)
SAFETY MARGIN = 75 KPA

1 0 1 2 3 4 5 6 7 8 9
1:100

THESE DRAWINGS ARE "NOT APPROVED FOR CONSTRUCTION" SINCE THESE ARE BASED UPON ASSUMED CONDITIONS. THE CONTRACTOR SHALL NOT PROCEED WITH CONSTRUCTION UNTIL THE ASSUMED CONDITIONS ARE VALIDATED AND APPROVAL IS RECEIVED FROM THE CONTRACTING OFFICER.

COMMONWEALTH OF MASSACHUSETTS
JEFFREY L. DeMAINE
FIRE PROTECTION ENGINEER
No. 41002
REGISTERED PROFESSIONAL ENGINEER

2/6/2012

UNLESS OTHERWISE NOTED, LINEAR DIMENSIONS SHOWN ARE IN METERS.

DESIGN COMPLETE SUBMITTAL

SYM	DESCRIPTION	DATE	APR
FNL	DESIGN COMPLETE SUBMITTAL	02-06-12	JLD

DESIGNED BY: JLD
DATE: 02-06-2012
DRAWN BY: JLD
SUBMITTED BY: TETRA TECH / FRM
CHECKED BY: WMC
FILE NO.: AF1202A-F111PN

TETRA TECH

US Army Corps of Engineers
Middle East District

COMMAND & CONTROL FACILITY
KANDAHAR AIR FIELD, AFGHANISTAN
COMMAND & CONTROL FACILITY
FIRE SUPPRESSION PLAN
FIRST FLOOR

SHEET REFERENCE NUMBER:
A
F-111

W:\23308\127-23308-11004\CAD\MED Drawings\AF1202\AF1202A\Fire Protection\AF1202A-F111PN.dwg 3/7/2012 9:35:33 AM Jeffers, Scott

NOTES:

A. REFER TO AF1103$–F002GN & AF1103$–F510DT FOR GENERAL NOTES, DETAILS, AND RESTRAINT SYSTEMS

B. 150 mm PIPING DOWN WITH A CHECK VALVE (NOT SHOWN) TO WATER TANKS VIA 150 mm UNDERGROUND PIPING (NOT SHOWN) FROM WATER METER TEST HEADER FOR RE–CIRCULATING WATER DURING FIRE PUMP TESTING.

C. ELECTRIC MOTOR DRIVEN, VERTICAL CENTRIFUGAL SPLIT CASE, 125 mm SUCTION X 100 mm DISCHARGE WITH REDUCER/ INCREASER = 150 mm SUCTION AND DISCHARGE (PUMP RATED FOR 31.5 LITERS/SEC DISCHARGE WITH A 344.7 KPA BOOST) (TYPICAL FOR 2 PUMPS)

D. 150 mm UP FROM UNDERGROUND PIPING FROM WATER TANKS.

E. 100 mm RISER CHECK VALVE ASSEMBLY TO BUILDING C SPRINKLER SYSTEMS. APPROX. 1.2 m AFF. (TYPICAL FOR 2 SPRINKLER RISER ASSEMBLIES) REFER TO AF1101C–F500DT FOR SPRINKLER SYSTEM RISER DETAILS.

F. CONCRETE SPLASHBLOCK FOR DRAIN

G. 50 mm SPRINKLER SYSTEM MAIN DRAIN TO EXTERIOR. 0.6 mm AFF

H. 150 mm INCOMING WATER SERVICE UP (UNDERGROUND)

I. 100 mm DOWN TO UNDERGROUND PIPING TO FREE STANDING FIRE DEPARTMENT CONNECTION. CHECK VALVE (NOT SHOWN) SHALL BE PROVIDED APPROXIMATELY 1 M ABOVE FLOOR.

J. ALL PUMP CONTROL PANELS SHALL HAVE 0.9 M FRONT CLEARANCE

K. FIRE PUMP #2 CONTROLLER

L. FIRE PUMP #1 CONTROLLER

M. 150 mm OS&Y VALVE. TEST HEADER VALVE NORMALLY CLOSED

N. 100 mm RAISED CONCRETE PUMP PAD

O. 100 mm ELBOW DOWN TO 150 mm FIRE PUMP DISCHARGE FROM 100 mm FIRE DEPARTMENT PUMPER CONNECTION PIPING

P. 150 mm FIRE PUMP TEST HEADERS @ 2.0 m AFF

Q. JOCKEY PUMP CONTROLLER

R. 150 mm PUMP DISCHARGE PIPE UP TO RISERS (TYPICAL FOR 2 PUMPS)

S. 150 mm DOWN TO FIRE PUMP TEST HEADER

T. 150 mm OS&Y VALVE. TEST HEADER VALVE NORMALLY CLOSED

U. TEST VALVE HEADER 4 HOSE CONNECTIONS. CENTERLINE OF WALL PIPE PENETRATION 0.9 m AFF

V. 150 mm ELBOW DOWN TO PUMP DISCHARGE PIPING FOR TEST HEADER

W. 150 mm WATER METER FOR PUMP FLOW TESTING. NO VALVES WITHIN 1000 mm HORIZONTAL DISTANCE AND NO FITTINGS WITHIN 400 mm.

X. 150 mm OS&Y VALVE. TEST HEADER VALVE NORMALLY CLOSED

Y. 150 mm CHECK VALVE (TYPICAL FOR 2 PUMPS)

Z. 150 mm TEE UP TO WATER METER AND HOSE CONNECTION TEST HEADERS

AA. 150 mm OS&Y VALVE WITH TAMPER SWITCH – PUMP DISCHARGE (TYP.)

BB. 150 mm X 127 mm ECCENTRIC REDUCER (TYPICAL FOR 2 PUMPS)

CC. JOCKEY PUMP SUCTION PIPING UNDER FIRE PUMP SUCTION PIPING

DD. 150 mm OS&Y VALVE w/ TAMPER SWITCH INSTALLED ON THE FIRE PUMP SUCTION PIPE (TYPICAL FOR 2 PUMPS)

EE. JOCKEY PUMP WITH SUCTION AND DISCHARGE w/ CONTROL & CHECK VALVES

FF. 150 mm X 150 mm X 100 mm TEE UP TO FIRE DEPARTMENT CONNECTION PIPING

GG. DOUBLE EXTERIOR ACCESS DOORS WITH REQUIRED CLEARANCE AND SIGNAGE (BY OTHERS). (COORDINATE EXACT LOCATION WITH ARCHITECT, FIRE PUMP INSTALLATION COMPANY AND THE US ARMY CORPS OF ENGINEERS).

GENERAL NOTES:

- ABOVE GROUND PIPING IN FIRE PUMP ROOM IS TO BE PROVIDED PER SPECIFICATIONS (STEEL PIPING AND FITTINGS MEETING SECTION 21 REQUIREMENTS.)
- UNDERGROUND PIPING FROM WATER TANKS IS TO BE PROVIDED PER SPECIFICATION AND CIVIL DRAWINGS. (CEMENT LINED DUCTILE IRON PIPING WITH FLANGED OR OTHER ALLOWABLE FITTINGS.)

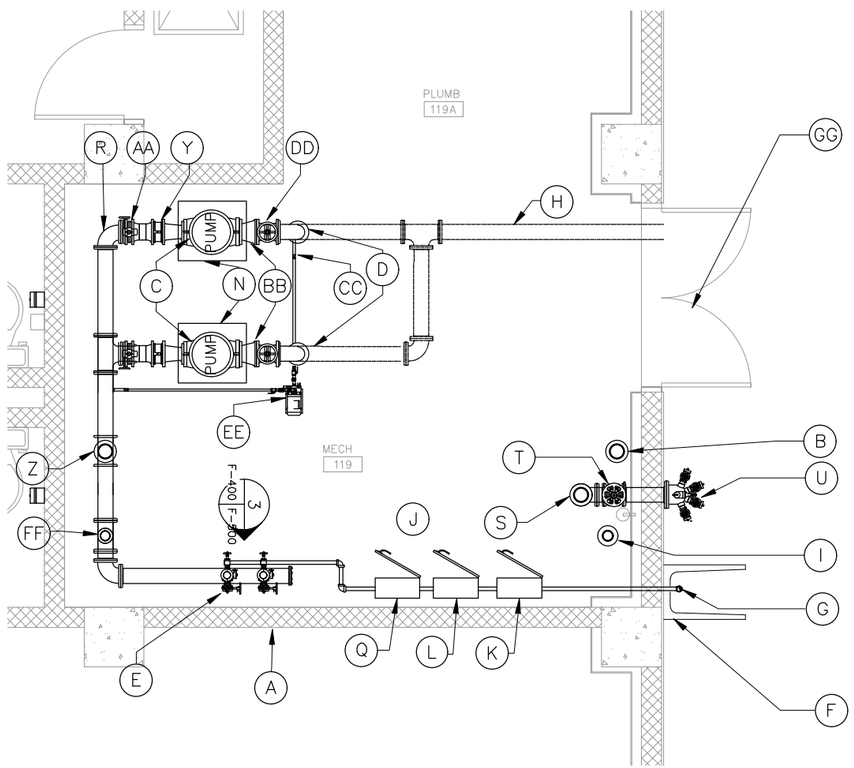

FIRE PUMP ROOM – LOW LEVEL
SCALE 1:30

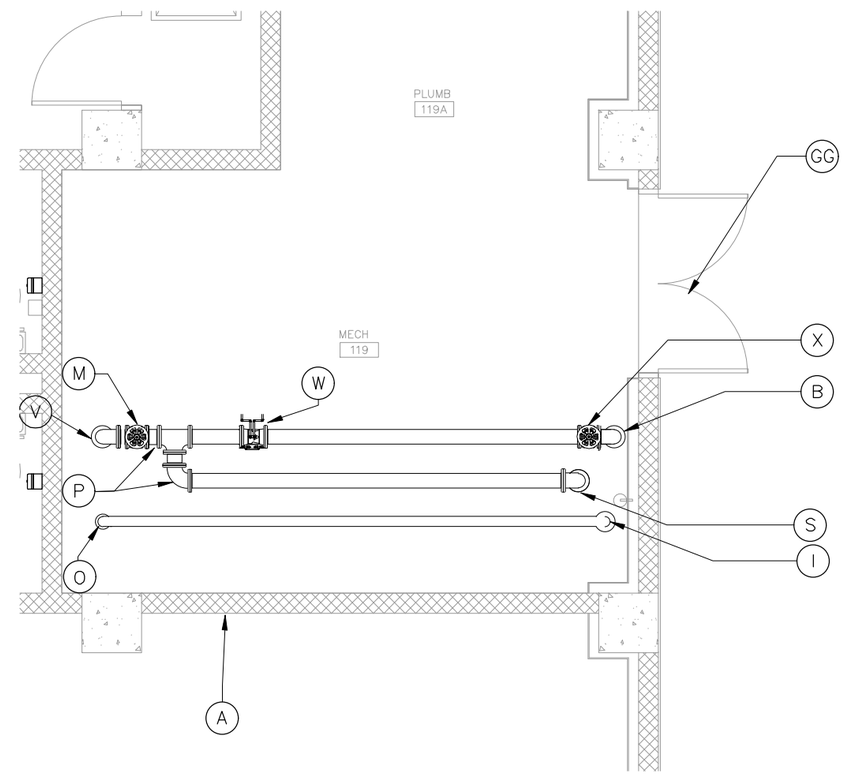

FIRE PUMP ROOM – UPPER LEVEL
SCALE 1:30

1 .50 0 1 2
1:30

THESE DRAWINGS ARE "NOT APPROVED FOR CONSTRUCTION" SINCE THESE ARE BASED UPON ASSUMED CONDITIONS. THE CONTRACTOR SHALL NOT PROCEED WITH CONSTRUCTION UNTIL THE ASSUMED CONDITIONS ARE VALIDATED AND APPROVAL IS RECEIVED FROM THE CONTRACTING OFFICER.

COMMONWEALTH OF MASSACHUSETTS
JEFFREY L. McMANUS
FIRE PROTECTION
No. 41602
REGISTERED PROFESSIONAL ENGINEER
2/6/2012

UNLESS OTHERWISE NOTED, LINEAR DIMENSIONS SHOWN ARE IN METERS.

DESIGN COMPLETE SUBMITTAL

SYMB	DESCRIPTION	DATE	APR
FNL	DESIGN COMPLETE SUBMITTAL	02–06–12	JLD

DESIGNED BY: JLD
DATE: 02–06–2012
DRAWN BY: SKD
SUBMITTED BY: TETRATECH / FRM
CHECKED BY: WMC
FILE NO.: AF1202A–F400LS

TETRA TECH

US Army Corps of Engineers
Middle East District

COMMAND & CONTROL FACILITY
KANDAHAR AIR FIELD, AFGHANISTAN
COMMAND & CONTROL FACILITY
FIRE SUPPRESSION PLAN
FIRE PUMP ROOM

SHEET REFERENCE NUMBER:
A
F–400

W:\23308\127–23308–11004\CAD\MED Drawings\AF1202\AF1202A\Fire Protection\AF1202A–F400LS.dwg 3/7/2012 9:36:12 AM Jeffers, Scott

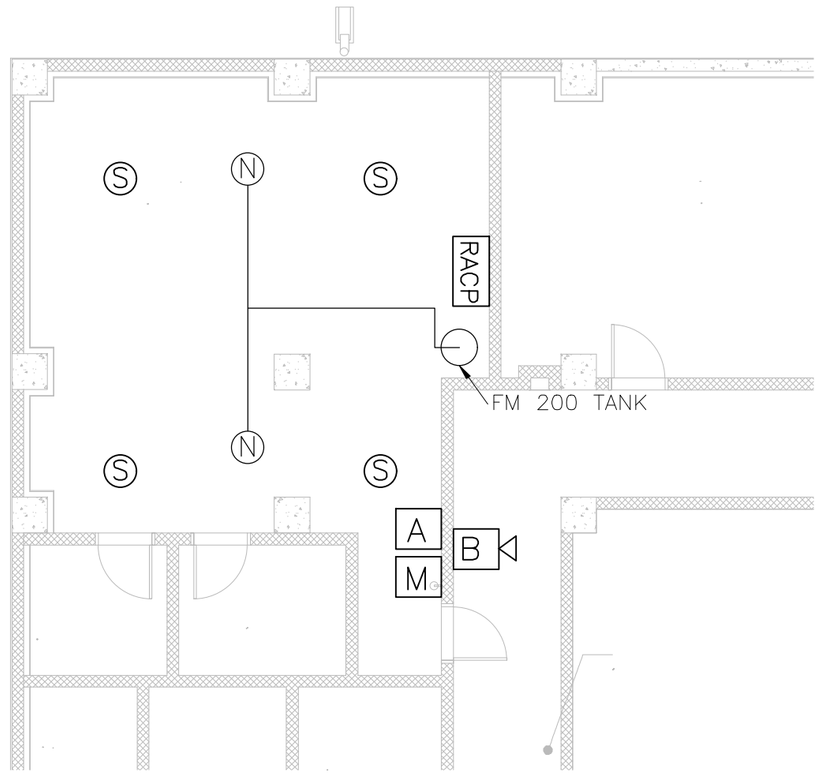

FM 200 PLAN – GROUND FLOOR – COMMS RM 129

SCALE 1:50

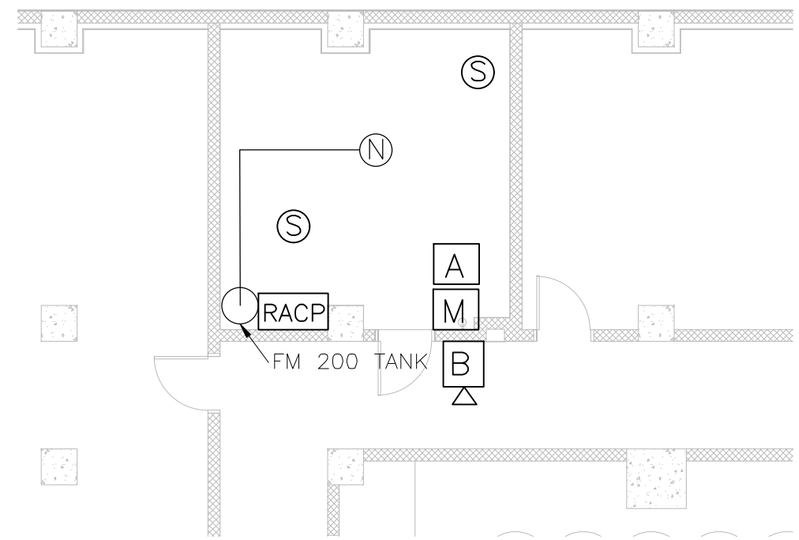

FM 200 PLAN – FIRST FLOOR – COMMS RM 209

SCALE 1:50

NOTES:

- SMOKE DETECTORS AT CEILING SHALL BE CONNECTED TO THE RELEASING FIRE ALARM PANEL WITHIN EACH ROOM.
- ACTUATION OF TWO SMOKE DETECTORS WITHIN A ROOM SHALL CAUSE THE CLEAN AGENT TO RELEASE.
- VOLUME UNDER RAISED FLOOR SHALL BE INCLUDED IN CALCULATION FOR FM200 QUANTITY. IN ADDITION, THE VOLUME OF ROOMS 127 AND 128 SHOULD BE INCLUDED IN QUANTITY CALCULATION FOR COMMS ROOM 129.

1 0 1 2 3 4

1:50

THESE DRAWINGS ARE "NOT APPROVED FOR CONSTRUCTION" SINCE THESE ARE BASED UPON ASSUMED CONDITIONS. THE CONTRACTOR SHALL NOT PROCEED WITH CONSTRUCTION UNTIL THE ASSUMED CONDITIONS ARE VALIDATED AND APPROVAL IS RECEIVED FROM THE CONTRACTING OFFICER.

COMMONWEALTH OF MASSACHUSETTS
JEFFREY L. DEMMER
FIRE PROTECTION
No. 41002
REGISTERED PROFESSIONAL ENGINEER

2/6/2012

UNLESS OTHERWISE NOTED, LINEAR DIMENSIONS SHOWN ARE IN METERS.

DESIGN COMPLETE SUBMITTAL

SYMB	DESCRIPTION	DATE	
FNL	DESIGN COMPLETE SUBMITTAL	02-06-12	JLD

DESIGNED BY: JLD	DATE: 02-06-2012		
DRAWN BY: JLD	SUBMITTED BY: TETRA TECH / FRM		
CHECKED BY: WMC	FILE NO.: AF1202A-F405LS		

TETRA TECH

US Army Corps of Engineers
Middle East District

COMMAND & CONTROL FACILITY
KANDAHAR AIR FIELD, AFGHANISTAN
COMMAND & CONTROL FACILITY
FM 200 DETAIL PLAN
ROOMS 129 AND 209

SHEET REFERENCE NUMBER:
A
F-405

W:\23308\127-23308-11004\CAD\MED Drawings\AF1202\AF1202A\Fire Protection\AF1202A-F405LS.dwg 3/7/2012 9:36:50 AM Jeffers, Scott

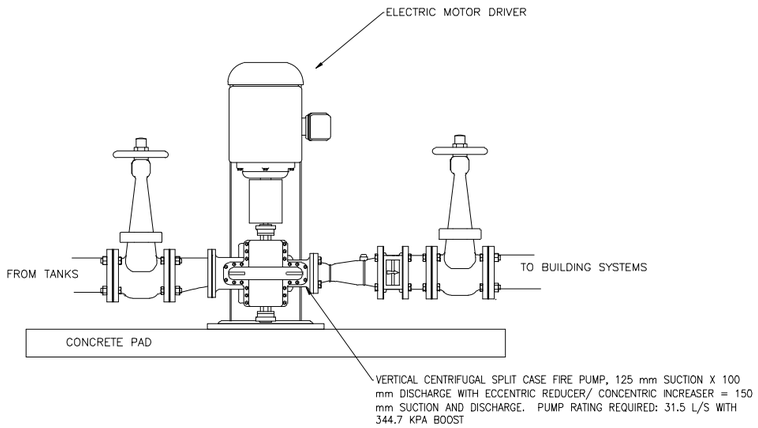

FIRE PUMP DETAIL 4 VARIOUS F-500

SCALE N.T.S.

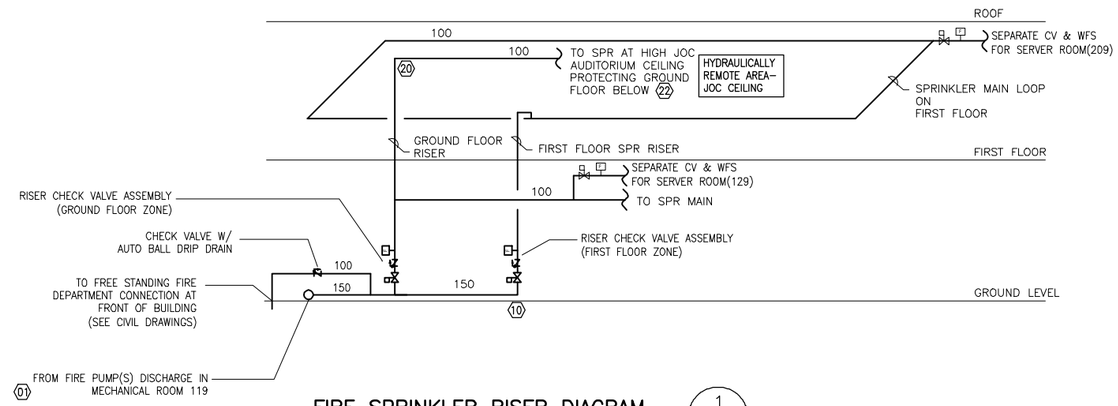

FIRE SPRINKLER RISER DIAGRAM 1 F-110 F-500

SCALE N.T.S.

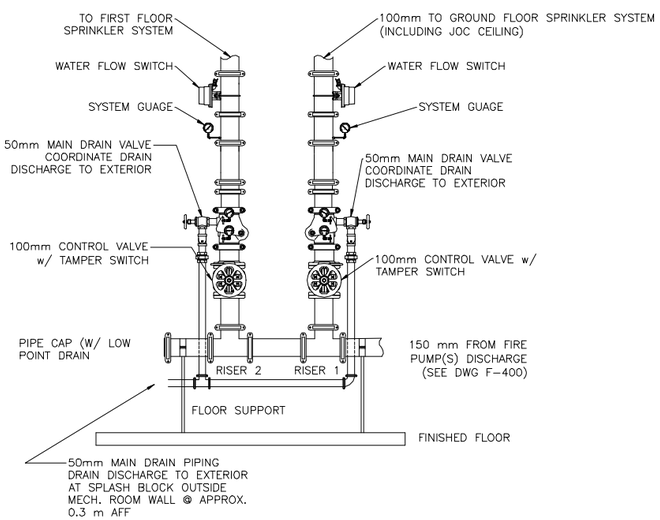

FIRE SPRINKLER RISER 3 F-400 F-500

SCALE N.T.S.

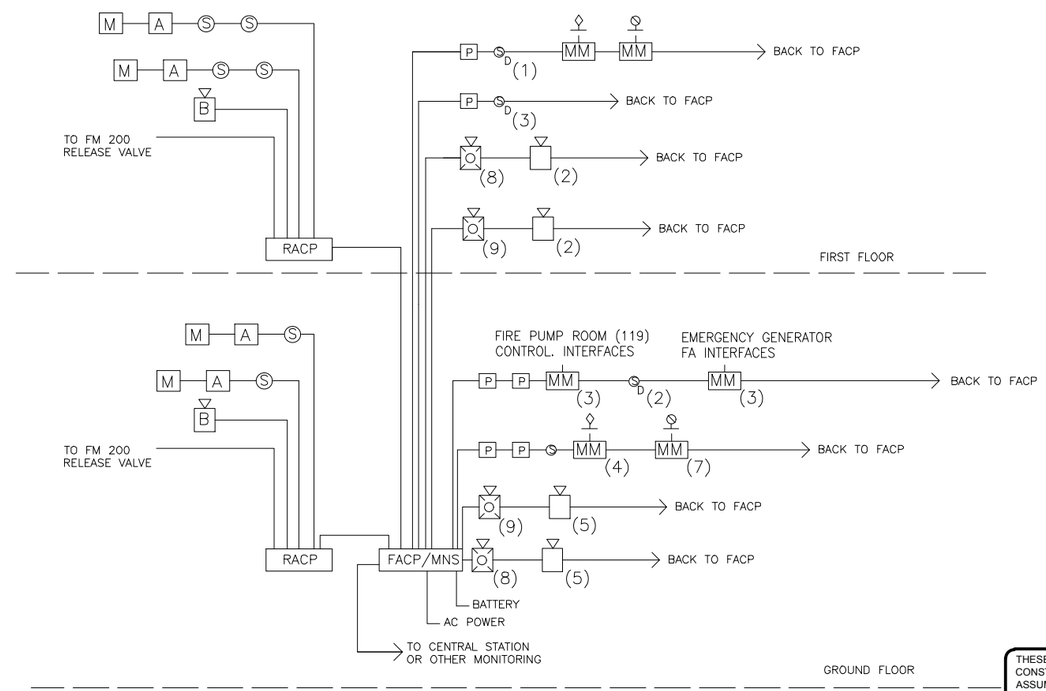

FIRE ALARM RISER DIAGRAM 2 NA F-500

SCALE N.T.S.

THESE DRAWINGS ARE "NOT APPROVED FOR CONSTRUCTION" SINCE THESE ARE BASED UPON ASSUMED CONDITIONS. THE CONTRACTOR SHALL NOT PROCEED WITH CONSTRUCTION UNTIL THE ASSUMED CONDITIONS ARE VALIDATED AND APPROVAL IS RECEIVED FROM THE CONTRACTING OFFICER.

COMMONWEALTH OF MASSACHUSETTS JEFFREY L. DeMANS FIRE PROTECTION No. 41002 REGISTERED PROFESSIONAL ENGINEER

2/6/2012

UNLESS OTHERWISE NOTED, LINEAR DIMENSIONS SHOWN ARE IN METERS.

DESIGN COMPLETE SUBMITTAL

SYMB	DESCRIPTION	DATE	APR
FNL	DESIGN COMPLETE SUBMITTAL	02-06-12	JLD

DESIGNED BY: JLD
DATE: 02-06-2012
DRAWN BY: JLD
SUBMITTED BY: TETRA TECH / FRM
CHECKED BY: WMC
FILE NO.: AF1202A-F500DT

TETRA TECH

US Army Corps of Engineers Middle East District

COMMAND & CONTROL FACILITY
KANDAHAR AIR FIELD, AFGHANISTAN
COMMAND & CONTROL FACILITY
FIRE PROTECTION DETAILS

SHEET REFERENCE NUMBER:
A
F-500

W:\23308\127-23308-11004\CAD\MED Drawings\AF1202\AF1202A\Fire Protection\AF1202A-F500DT.dwg 3/7/2012 9:37:21 AM Jeffers, Scott

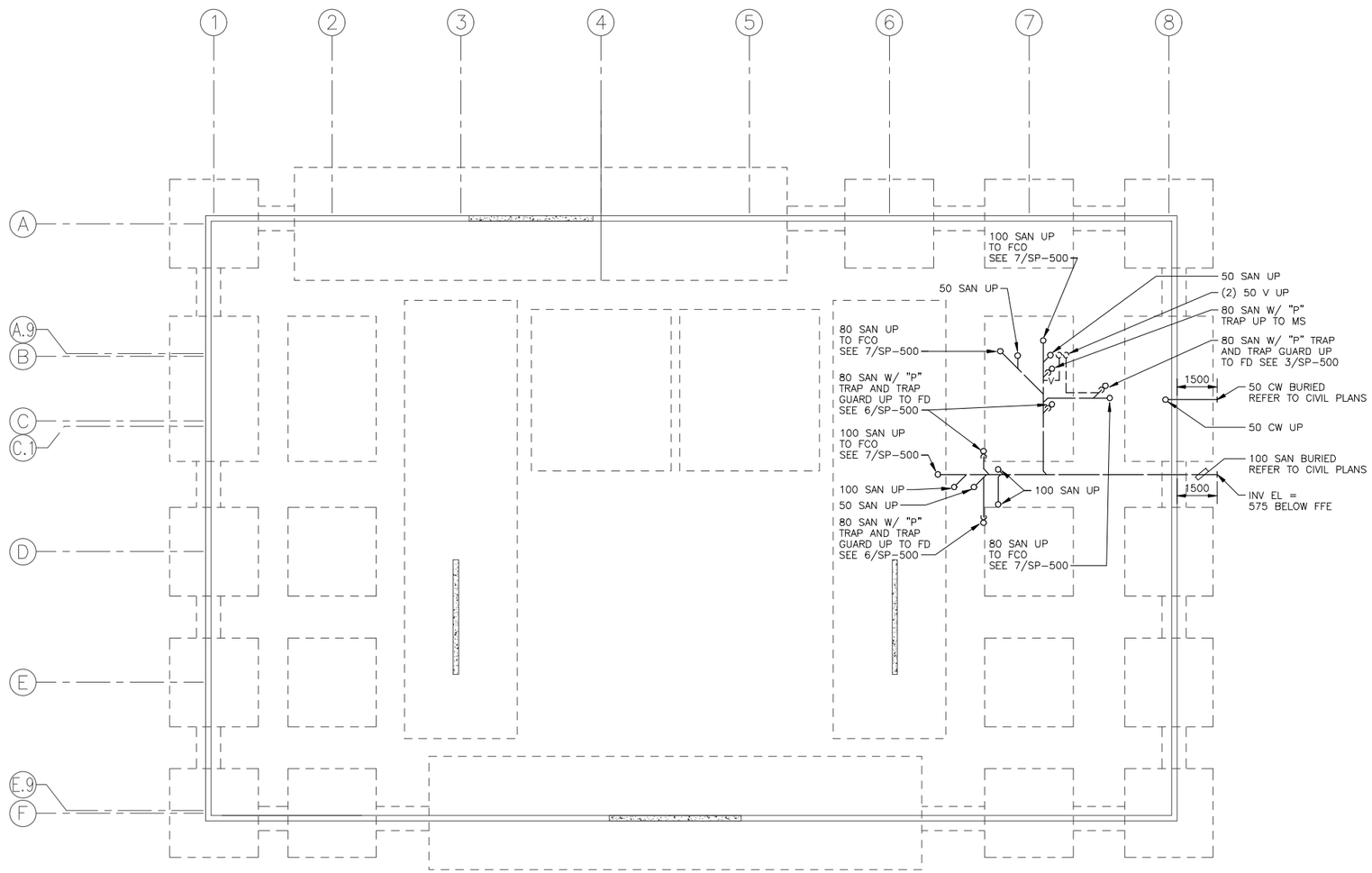

FOUNDATION PLAN – AREA A

SCALE 1:100

NOTE: ALL PIPING SHOWN IS BURIED UNLESS OTHERWISE NOTED.

1 0 1 2 3 4 5 6 7 8 9
1:100

THESE DRAWINGS ARE "NOT APPROVED FOR CONSTRUCTION" SINCE THESE ARE BASED UPON ASSUMED CONDITIONS. THE CONTRACTOR SHALL NOT PROCEED WITH CONSTRUCTION UNTIL THE ASSUMED CONDITIONS ARE VALIDATED AND APPROVAL IS RECEIVED FROM THE CONTRACTING OFFICER.

STATE OF NEW YORK
KEVIN CHARLES LEGRI
079082
LICENSED PROFESSIONAL ENGINEER
2/6/2012

UNLESS OTHERWISE NOTED, LINEAR DIMENSIONS SHOWN ARE IN METERS.

DESIGN COMPLETE SUBMITTAL

SYMB	DESCRIPTION	DATE	
FNL	DESIGN COMPLETE SUBMITTAL	02-06-12	KCT
			APR

DESIGNED BY: DCG
DATE: 02-06-2012
DRAWN BY: BCL
SUBMITTED BY: TETRA TECH
CHECKED BY: GPD
FILE NO.: AF1202A-P100PN

TETRA TECH

US Army Corps of Engineers
Middle East District

COMMAND & CONTROL FACILITY
KANDAHAR AIR FIELD, AFGHANISTAN
COMMAND & CONTROL FACILITY
FOUNDATION PLAN – AREA A

SHEET REFERENCE NUMBER:
A
P-100

W:\23308\127-23308-11004\CAD\MED Drawings\AF1202\AF1202A\Plumbing\AF1202A-P100PN.dwg 3/7/2012 9:38:04 AM Jeffers, Scott

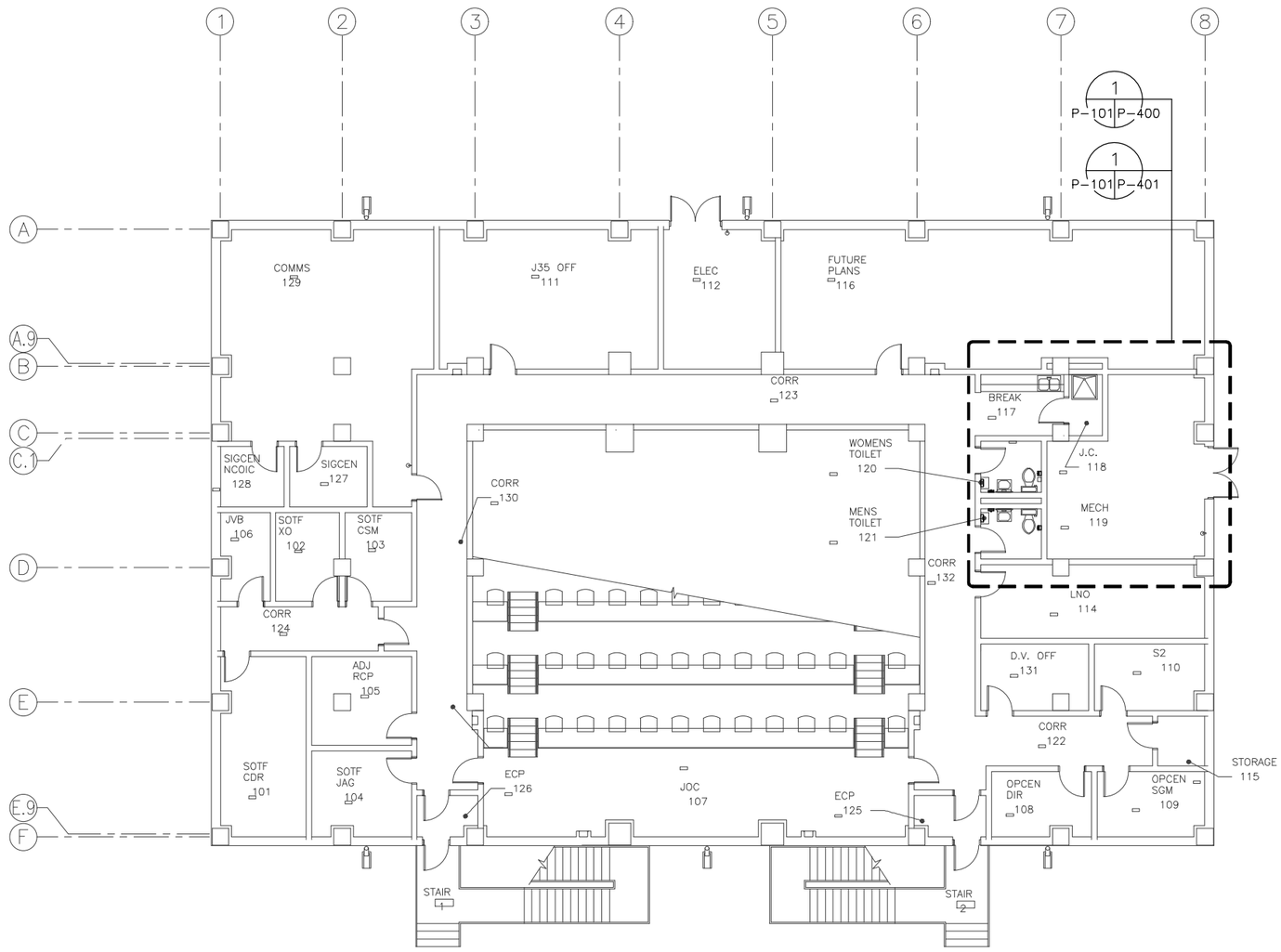

GROUND FLOOR PLAN – AREA A

SCALE 1:100

1 0 1 2 3 4 5 6 7 8 9

1:100

THESE DRAWINGS ARE "NOT APPROVED FOR CONSTRUCTION" SINCE THESE ARE BASED UPON ASSUMED CONDITIONS. THE CONTRACTOR SHALL NOT PROCEED WITH CONSTRUCTION UNTIL THE ASSUMED CONDITIONS ARE VALIDATED AND APPROVAL IS RECEIVED FROM THE CONTRACTING OFFICER.

STATE OF NEW YORK · KEVIN CHARLES TERRY · 079095 · LICENSED PROFESSIONAL ENGINEER

2/6/2012

UNLESS OTHERWISE NOTED, LINEAR DIMENSIONS SHOWN ARE IN METERS.

DESIGN COMPLETE SUBMITTAL

SYMB	DESCRIPTION	DATE	
FNL	DESIGN COMPLETE SUBMITTAL	02-06-12	KCT

DESIGNED BY: DCG
DRAWN BY: BCL
CHECKED BY: GPD
DATE: 02-06-2012
SUBMITTED BY: TETRA TECH
FILE NO.: AF1202A-P101PN

TETRA TECH

US Army Corps of Engineers Middle East District

COMMAND & CONTROL FACILITY
KANDAHAR AIR FIELD, AFGHANISTAN
COMMAND & CONTROL FACILITY
GROUND FLOOR PLAN – AREA A

SHEET REFERENCE NUMBER:
A
P-101

W:\23308\127-23308-11004\CAD\MED Drawings\AF1202\AF1202A\Plumbing\AF1202A-P101PN.dwg 3/7/2012 9:38:41 AM Jeffers, Scott

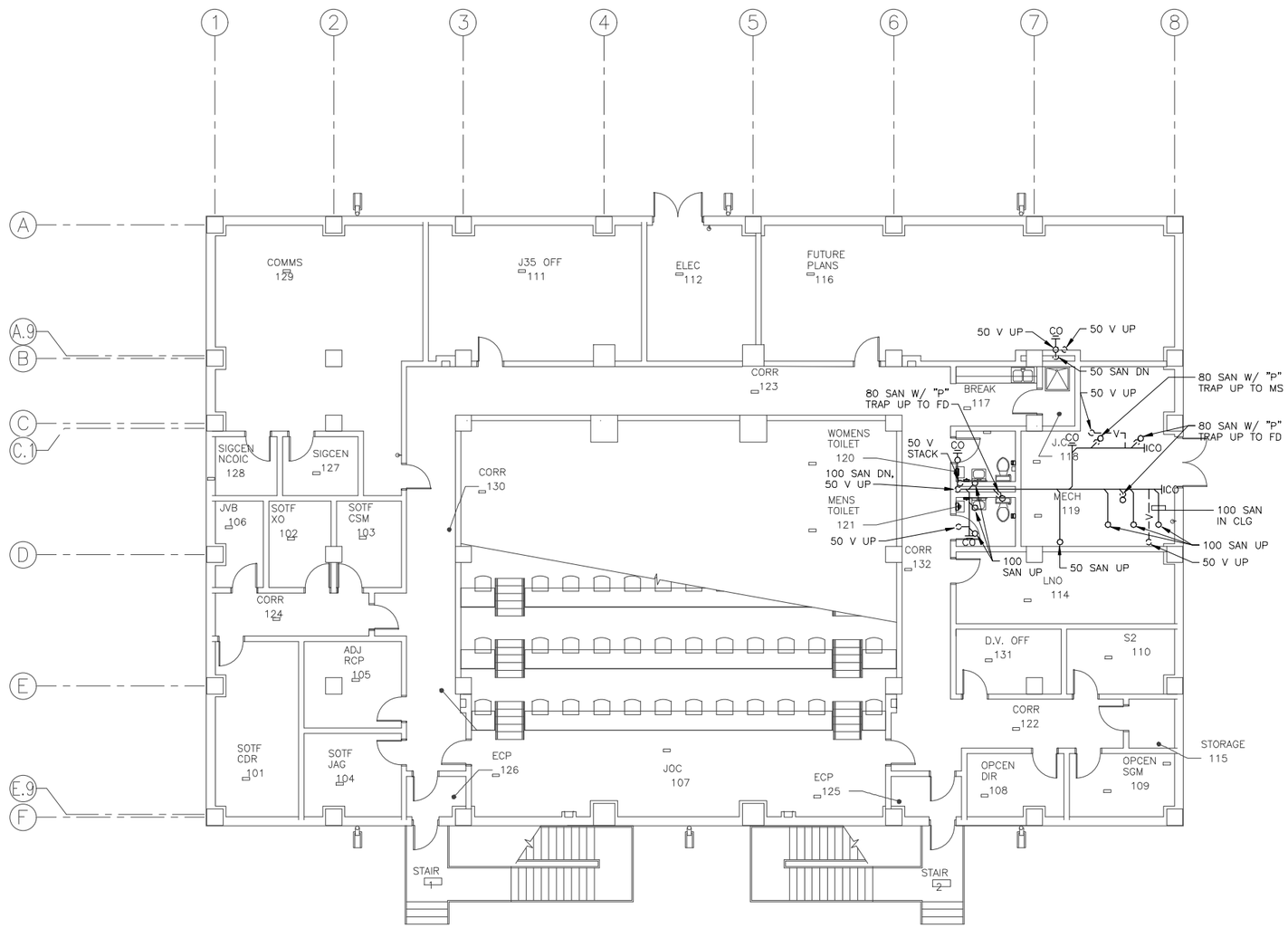

FIRST FLOOR SANITARY PLAN – AREA A

SCALE 1:100

1 0 1 2 3 4 5 6 7 8 9
1:100

THESE DRAWINGS ARE "NOT APPROVED FOR CONSTRUCTION" SINCE THESE ARE BASED UPON ASSUMED CONDITIONS. THE CONTRACTOR SHALL NOT PROCEED WITH CONSTRUCTION UNTIL THE ASSUMED CONDITIONS ARE VALIDATED AND APPROVAL IS RECEIVED FROM THE CONTRACTING OFFICER.

STATE OF NEW YORK · KEVIN CHARLES TERRY · 073092 · LICENSED PROFESSIONAL ENGINEER

2/6/2012

UNLESS OTHERWISE NOTED, LINEAR DIMENSIONS SHOWN ARE IN METERS.

DESIGN COMPLETE SUBMITTAL

SYMB	DESCRIPTION	DATE	APR
FNL	DESIGN COMPLETE SUBMITTAL	02-06-12	KCT

DESIGNED BY: DCG
DRAWN BY: BCL
CHECKED BY: GPD
DATE: 02-06-2012
SUBMITTED BY: TETRA TECH
FILE NO.: AF1202A-P102PN

TETRA TECH

US Army Corps of Engineers
Middle East District

COMMAND & CONTROL FACILITY
KANDAHAR AIR FIELD, AFGHANISTAN
COMMAND & CONTROL FACILITY
FIRST FLOOR SANITARY PLAN – AREA A

SHEET REFERENCE NUMBER:
A
P–102

W:\23308\127-23308-11004\CAD\MED Drawings\AF1202\AF1202A\Plumbing\AF1202A-P102PN.dwg 3/7/2012 9:39:18 AM Jeffers, Scott

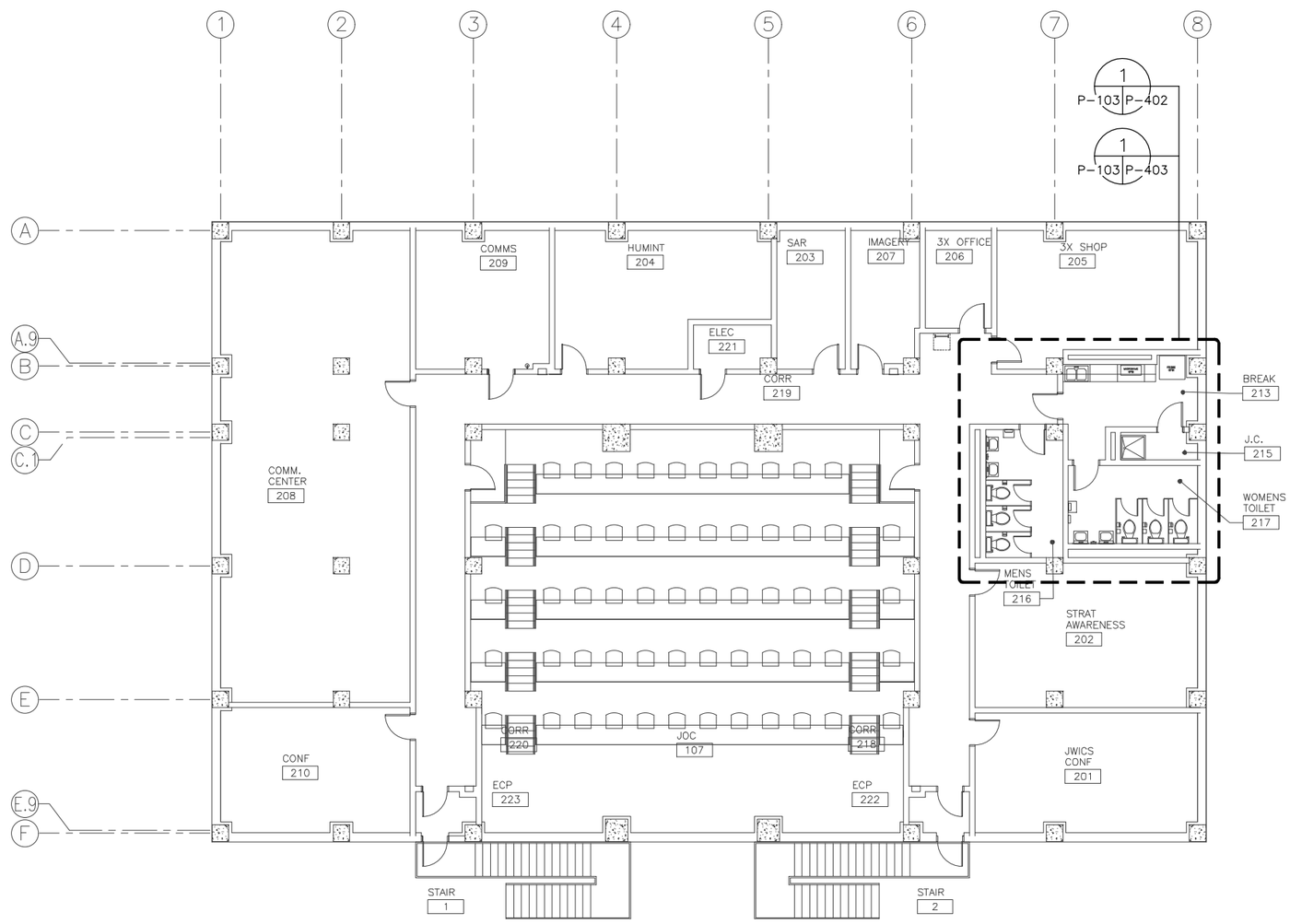

FIRST FLOOR PLAN – AREA A

SCALE 1:100

1 0 1 2 3 4 5 6 7 8 9

1:100

THESE DRAWINGS ARE "NOT APPROVED FOR CONSTRUCTION" SINCE THESE ARE BASED UPON ASSUMED CONDITIONS. THE CONTRACTOR SHALL NOT PROCEED WITH CONSTRUCTION UNTIL THE ASSUMED CONDITIONS ARE VALIDATED AND APPROVAL IS RECEIVED FROM THE CONTRACTING OFFICER.

STATE OF NEW YORK
KEVIN CHARLES LEGRAND
073092
LICENSED PROFESSIONAL ENGINEER
2/6/2012

UNLESS OTHERWISE NOTED, LINEAR DIMENSIONS SHOWN ARE IN METERS.

DESIGN COMPLETE SUBMITTAL

SYMB	DESCRIPTION	DATE	APR
FNL	DESIGN COMPLETE SUBMITTAL	02-06-12	KCT

DESIGNED BY: DCG
DATE: 02-06-2012
DRAWN BY: BCL
SUBMITTED BY: TETRA TECH
CHECKED BY: GPD
FILE NO.: AF1202A-P103PN

TETRA TECH

US Army Corps of Engineers
Middle East District

COMMAND & CONTROL FACILITY
KANDAHAR AIR FIELD, AFGHANISTAN
COMMAND & CONTROL FACILITY
FIRST FLOOR PLAN – AREA A

SHEET REFERENCE NUMBER:
A
P-103

W:\23308\127-23308-11004\CAD\MED Drawings\AF1202\AF1202A\Plumbing\AF1202A-P103PN.dwg 3/7/2012 9:39:49 AM Jeffers, Scott

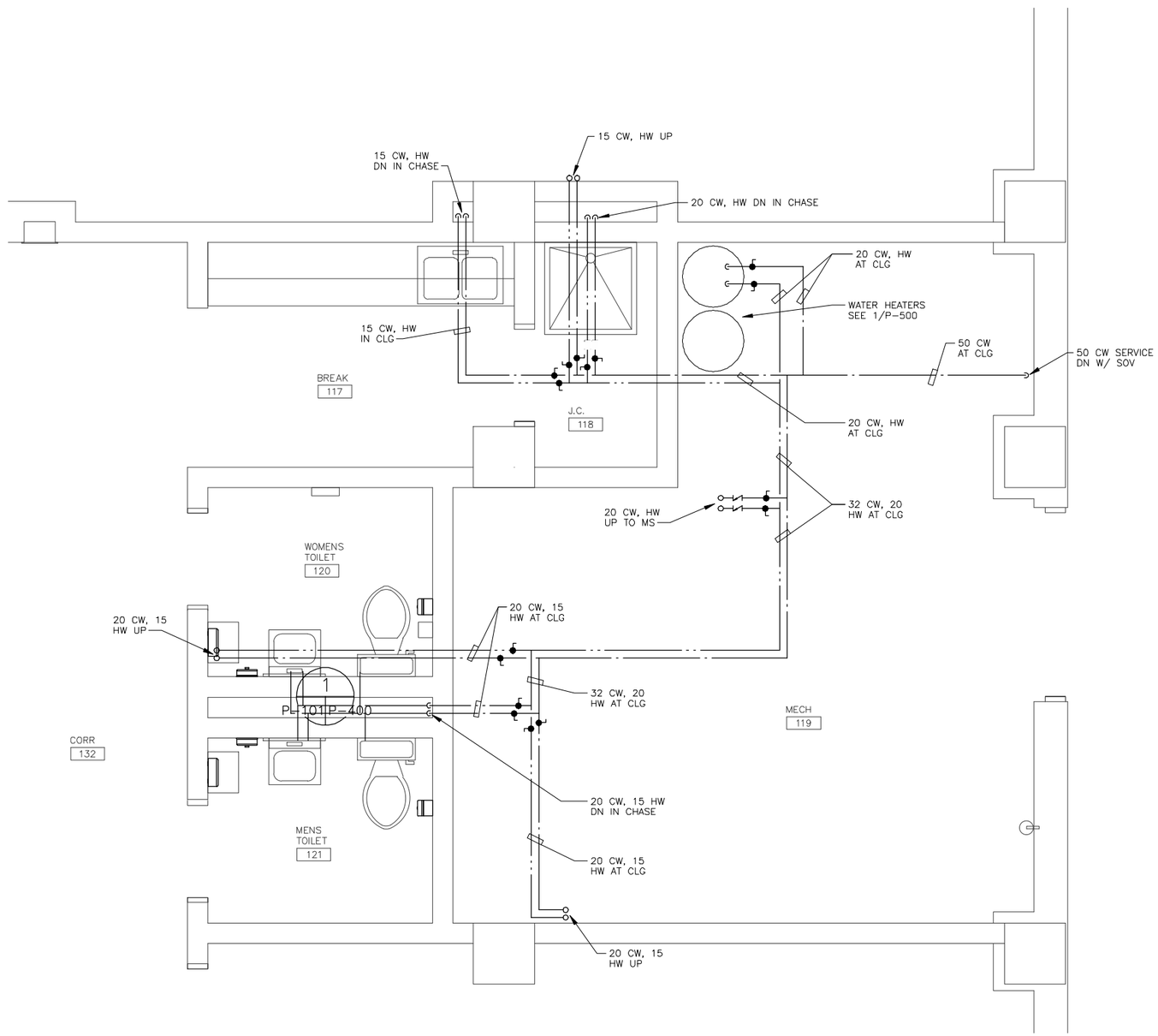

1
P-101 P-400

GROUND FLOOR ENLARGED WATER PLAN

SCALE 1:25

1 .50 0 1 1.5
1:25

THESE DRAWINGS ARE "NOT APPROVED FOR CONSTRUCTION" SINCE THESE ARE BASED UPON ASSUMED CONDITIONS. THE CONTRACTOR SHALL NOT PROCEED WITH CONSTRUCTION UNTIL THE ASSUMED CONDITIONS ARE VALIDATED AND APPROVAL IS RECEIVED FROM THE CONTRACTING OFFICER.

STATE OF NEW YORK · KEVIN CHARLES TERRY · 073093 · LICENSED PROFESSIONAL ENGINEER

2/6/2012

UNLESS OTHERWISE NOTED, LINEAR DIMENSIONS SHOWN ARE IN METERS.

DESIGN COMPLETE SUBMITTAL

SYMB	DESCRIPTION	DATE	
FNL	DESIGN COMPLETE SUBMITTAL	02-06-12	KCT APR

DESIGNED BY: DCG
DATE: 02-06-2012
DRAWN BY: BCL
SUBMITTED BY: TETRA TECH
CHECKED BY: GPD
FILE NO.: AF1202A-P400LS

TETRA TECH

US Army Corps of Engineers
Middle East District

COMMAND & CONTROL FACILITY
KANDAHAR AIR FIELD, AFGHANISTAN
COMMAND & CONTROL FACILITY
GROUND FLOOR ENLARGED WATER PLAN

SHEET REFERENCE NUMBER:
A
P-400

W:\23308\127-23308-11004\CAD\MED Drawings\AF1202\AF1202A\Plumbing\AF1202A-P400LS.dwg 3/7/2012 9:40:27 AM Jeffers, Scott

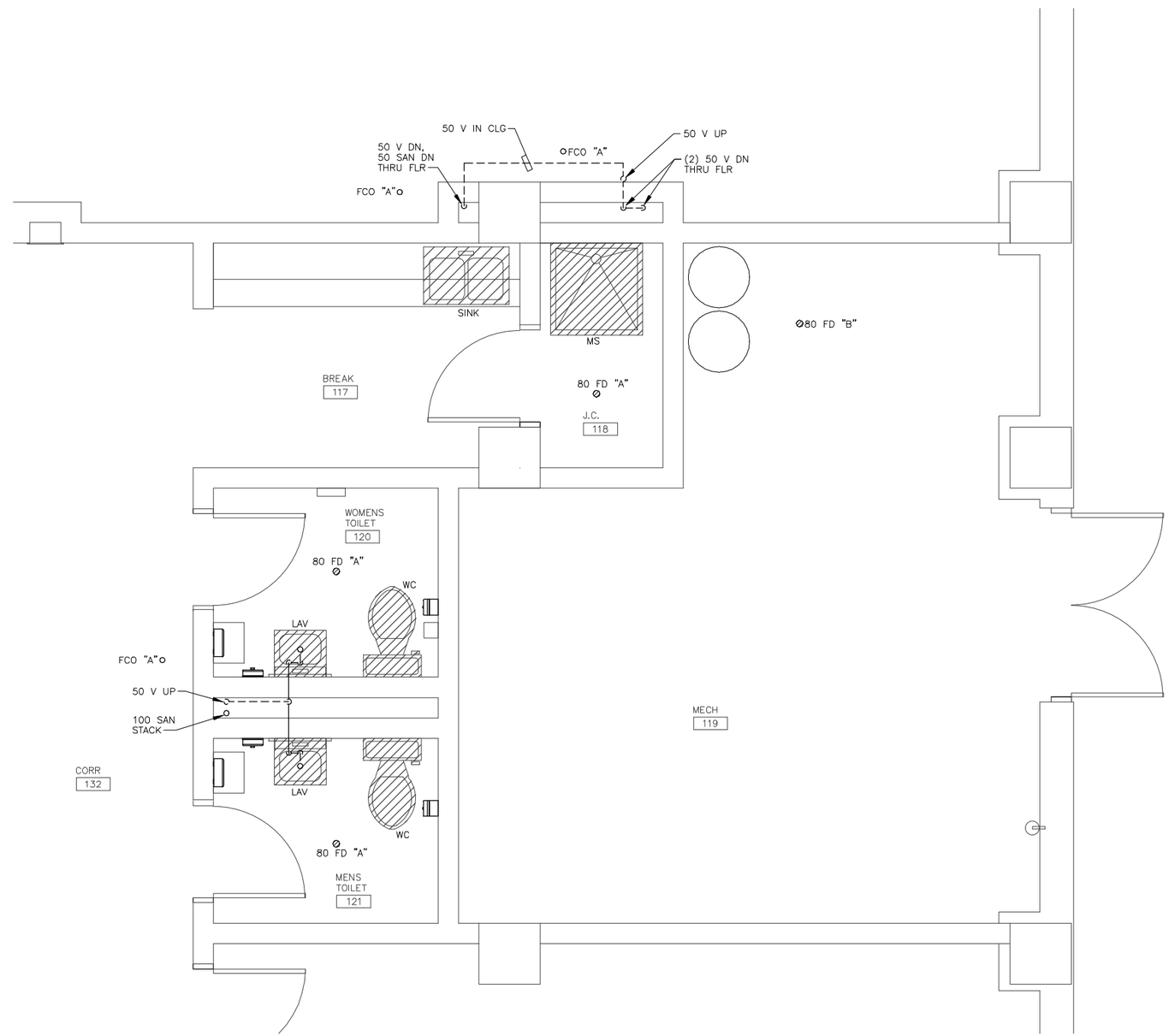

1
P-101 P-401

GROUND FLOOR ENLARGED SANITARY AND VENT PLAN
SCALE 1:25

1 .50 0 1 1.5
1:25

THESE DRAWINGS ARE "NOT APPROVED FOR CONSTRUCTION" SINCE THESE ARE BASED UPON ASSUMED CONDITIONS. THE CONTRACTOR SHALL NOT PROCEED WITH CONSTRUCTION UNTIL THE ASSUMED CONDITIONS ARE VALIDATED AND APPROVAL IS RECEIVED FROM THE CONTRACTING OFFICER.

STATE OF NEW YORK
KEVIN CHARLES TERRY
073092
LICENSED PROFESSIONAL ENGINEER
2/6/2012

UNLESS OTHERWISE NOTED, LINEAR DIMENSIONS SHOWN ARE IN METERS.

DESIGN COMPLETE SUBMITTAL

SYMB	DESCRIPTION	DATE	APR
FNL	DESIGN COMPLETE SUBMITTAL	02-06-12	KCT

DESIGNED BY: DCG
DATE: 02-06-2012
DRAWN BY: BCL
SUBMITTED BY: TETRA TECH
CHECKED BY: GPD
FILE NO.: AF1202A-P401LS

TETRA TECH

US Army Corps of Engineers
Middle East District

COMMAND & CONTROL FACILITY
KANDAHAR AIR FIELD, AFGHANISTAN
COMMAND & CONTROL FACILITY
GROUND FLOOR ENLARGED SANITARY AND VENT PLAN

SHEET REFERENCE NUMBER:
A
P-401

W:\23308\127-23308-11004\CAD\MED Drawings\AF1202\AF1202A\Plumbing\AF1202A-P401LS.dwg 3/7/2012 9:40:59 AM Jeffers, Scott

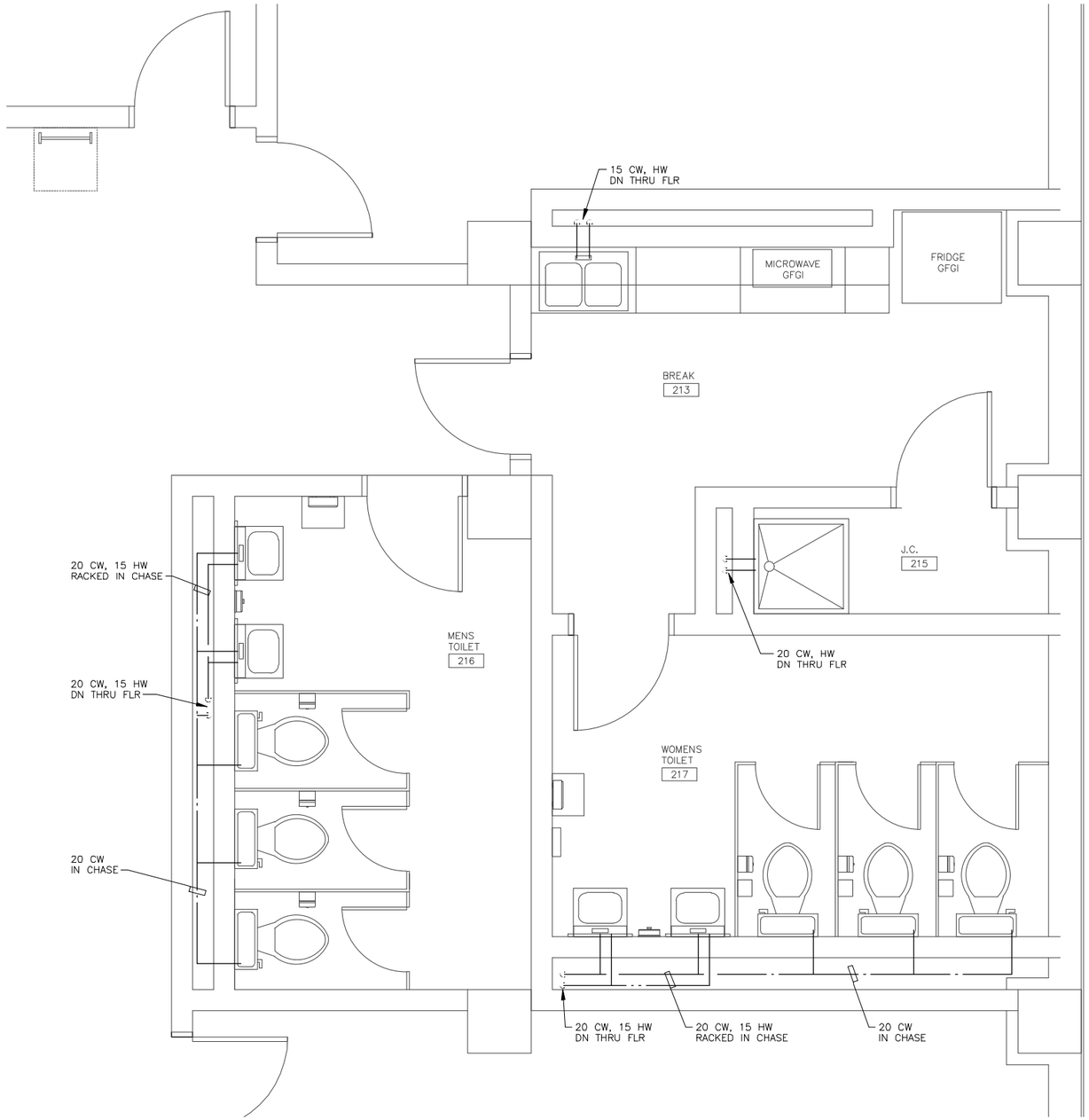

1
P-103 P-402

FIRST FLOOR ENLARGED WATER PLAN

SCALE 1:25

NOTE: COORDINATE PLUMBING PIPING WITH SPRINKLER PIPING AT THIS LEVEL AND COMING UP FROM BELOW

1 .50 0 1 1.5
1:25

THESE DRAWINGS ARE "NOT APPROVED FOR CONSTRUCTION" SINCE THESE ARE BASED UPON ASSUMED CONDITIONS. THE CONTRACTOR SHALL NOT PROCEED WITH CONSTRUCTION UNTIL THE ASSUMED CONDITIONS ARE VALIDATED AND APPROVAL IS RECEIVED FROM THE CONTRACTING OFFICER.

STATE OF NEW YORK
KEVIN CHARLES TERRY
073093
LICENSED PROFESSIONAL ENGINEER
2/6/2012

UNLESS OTHERWISE NOTED, LINEAR DIMENSIONS SHOWN ARE IN METERS.

DESIGN COMPLETE SUBMITTAL

SYMB	DESCRIPTION	DATE	APR
FNL	DESIGN COMPLETE SUBMITTAL	02-06-12	KCT

DESIGNED BY: DCG
DATE: 02-06-2012
DRAWN BY: BCL
SUBMITTED BY: TETRA TECH
CHECKED BY: GPD
FILE NO.: AF1202A-P402LS

TETRA TECH

US Army Corps of Engineers
Middle East District

COMMAND & CONTROL FACILITY
KANDAHAR AIR FIELD, AFGHANISTAN
COMMAND & CONTROL FACILITY
FIRST FLOOR ENLARGED WATER PLAN

SHEET REFERENCE NUMBER:
A
P-402

W:\23308\127-23308-11004\CAD\MED Drawings\AF1202\AF1202A\Plumbing\AF1202A-P402LS.dwg 3/7/2012 9:41:32 AM Jeffers, Scott

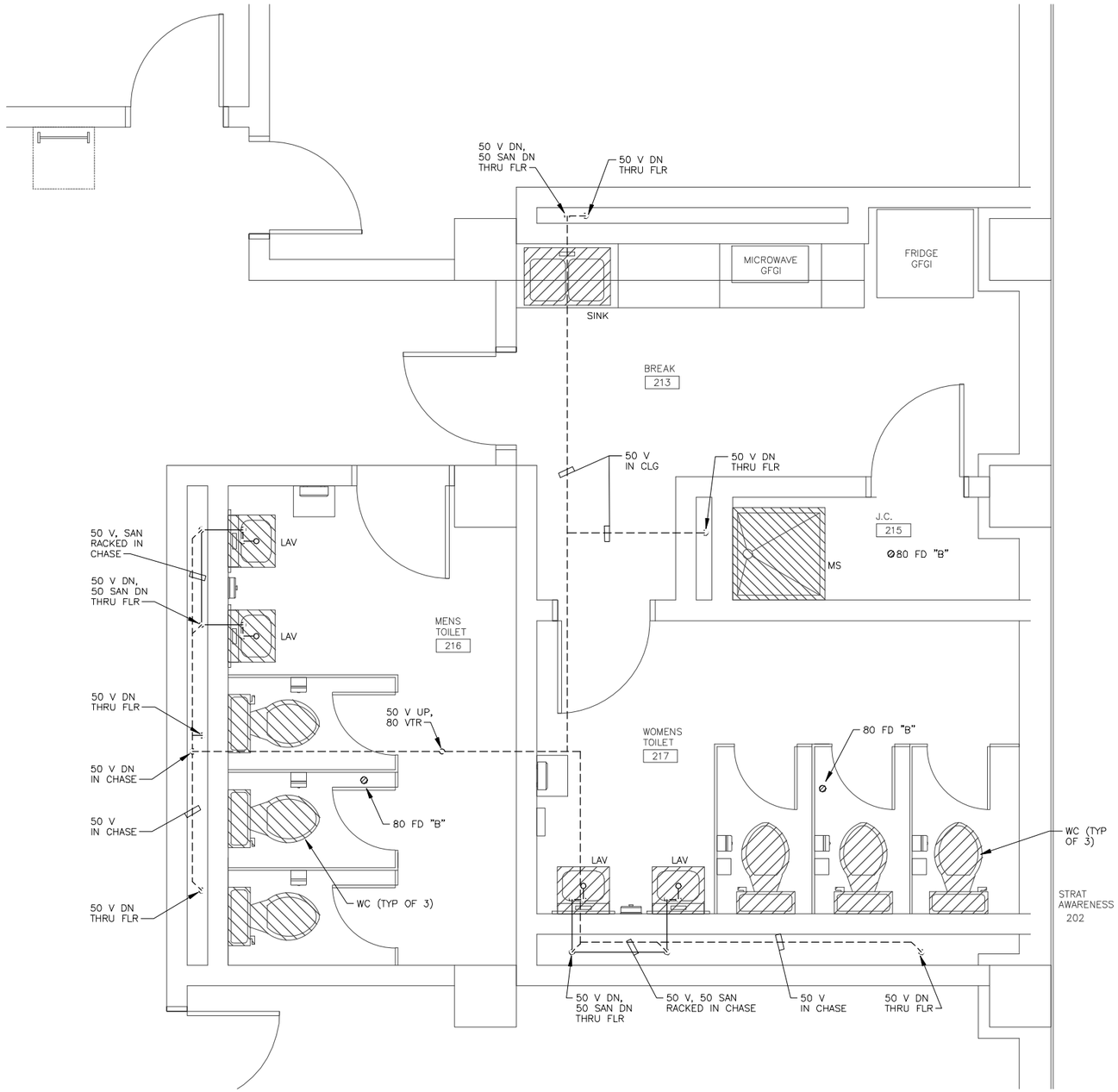

1
P-103 P-403

FIRST FLOOR ENLARGED SANITARY AND VENT PLAN

SCALE 1:25

NOTE: COORDINATE PLUMBING PIPING WITH SPRINKLER PIPING AT THIS LEVEL AND COMING UP FROM BELOW

1 .50 0 1 1.5
1:25

THESE DRAWINGS ARE "NOT APPROVED FOR CONSTRUCTION" SINCE THESE ARE BASED UPON ASSUMED CONDITIONS. THE CONTRACTOR SHALL NOT PROCEED WITH CONSTRUCTION UNTIL THE ASSUMED CONDITIONS ARE VALIDATED AND APPROVAL IS RECEIVED FROM THE CONTRACTING OFFICER.

STATE OF NEW YORK · KEVIN CHARLES TERRY · 073093 · LICENSED PROFESSIONAL ENGINEER
2/6/2012

UNLESS OTHERWISE NOTED, LINEAR DIMENSIONS SHOWN ARE IN METERS.

DESIGN COMPLETE SUBMITTAL

SYMB	DESCRIPTION	DATE	
FNL	DESIGN COMPLETE SUBMITTAL	02-06-12	KCT APR

DESIGNED BY: DCG
DATE: 02-06-2012
DRAWN BY: BCL
SUBMITTED BY: TETRA TECH
CHECKED BY: GPD
FILE NO.: AF1202A-P403LS

TETRA TECH

US Army Corps of Engineers
Middle East District

COMMAND & CONTROL FACILITY
KANDAHAR AIR FIELD, AFGHANISTAN
COMMAND & CONTROL FACILITY
FIRST FLOOR ENLARGED SANITARY AND VENT PLAN

SHEET REFERENCE NUMBER:
A
P-403

W:\23308\127-23308-11004\CAD\MED Drawings\AF1202\AF1202A\Plumbing\AF1202A-P403LS.dwg 3/7/2012 9:42:06 AM Jeffers, Scott

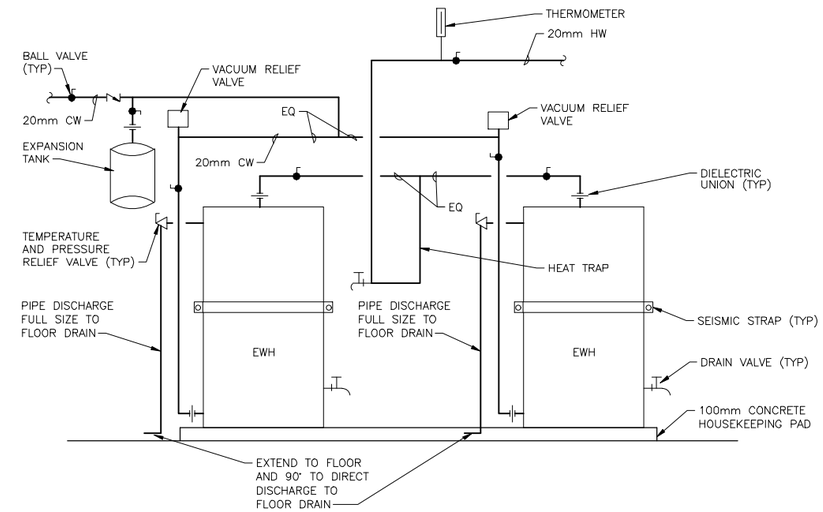

DOMESTIC ELECTRIC WATER HEATER

SCALE NONE

1
P-500 | P-500

THESE DRAWINGS ARE "NOT APPROVED FOR CONSTRUCTION" SINCE THESE ARE BASED UPON ASSUMED CONDITIONS. THE CONTRACTOR SHALL NOT PROCEED WITH CONSTRUCTION UNTIL THE ASSUMED CONDITIONS ARE VALIDATED AND APPROVAL IS RECEIVED FROM THE CONTRACTING OFFICER.

STATE OF NEW YORK · KEVIN CHARLES TERRY · 073082 · LICENSED PROFESSIONAL ENGINEER

2/6/2012

UNLESS OTHERWISE NOTED, LINEAR DIMENSIONS SHOWN ARE IN METERS.

DESIGN COMPLETE SUBMITTAL

SYMB	DESCRIPTION	DATE	
FNL	DESIGN COMPLETE SUBMITTAL	02-06-12	KCT APR

DESIGNED BY: DCG
DATE: 02-06-2012
DRAWN BY: BCL
SUBMITTED BY: TETRA TECH
CHECKED BY: GPD
FILE NO.: AF1202A-P500DT

TETRA TECH

US Army Corps of Engineers
Middle East District

COMMAND & CONTROL FACILITY
KANDAHAR AIR FIELD, AFGHANISTAN
COMMAND & CONTROL FACILITY
PLUMBING DETAILS

SHEET REFERENCE NUMBER:
A
P-500

W:\23308\127-23308-11004\CAD\MED Drawings\AF1202\AF1202A\Plumbing\AF1202A-P500DT.dwg 3/7/2012 9:42:28 AM Jeffers, Scott

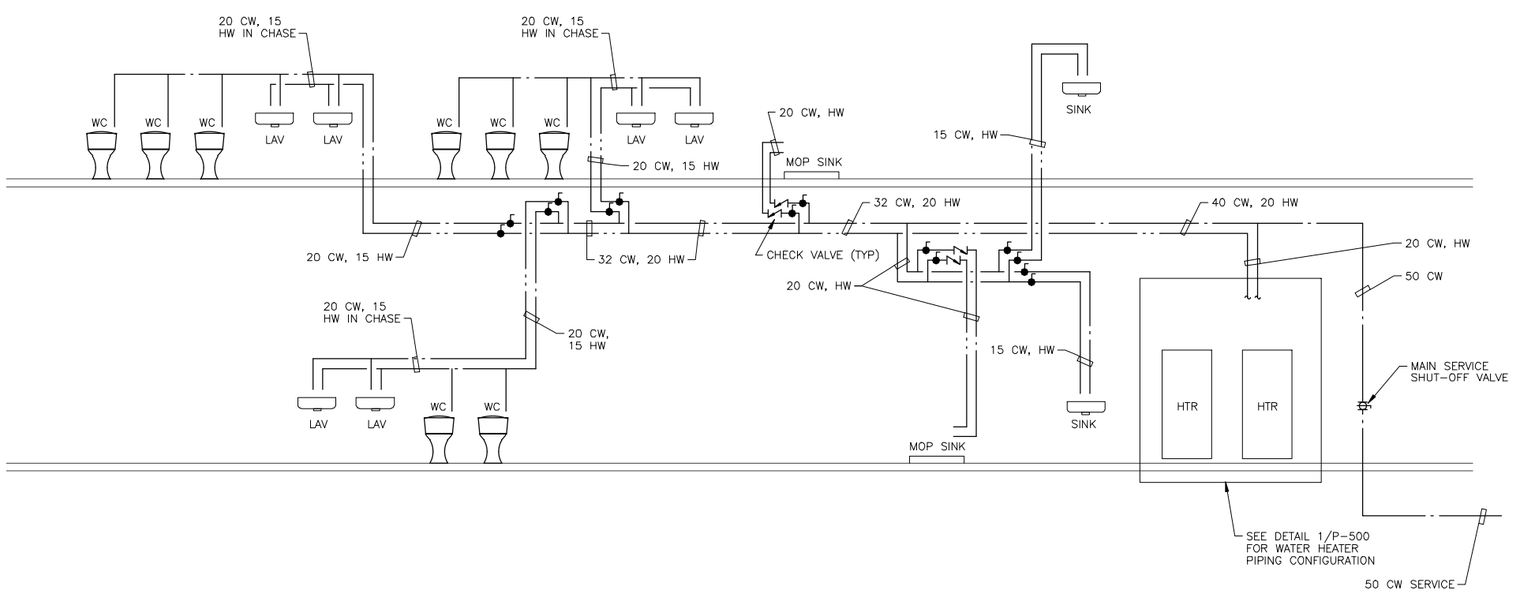

PLUMBING WATER RISER DIAGRAM
NOT TO SCALE

THESE DRAWINGS ARE "NOT APPROVED FOR CONSTRUCTION" SINCE THESE ARE BASED UPON ASSUMED CONDITIONS. THE CONTRACTOR SHALL NOT PROCEED WITH CONSTRUCTION UNTIL THE ASSUMED CONDITIONS ARE VALIDATED AND APPROVAL IS RECEIVED FROM THE CONTRACTING OFFICER.

STATE OF NEW YORK
KEVIN CHARLES TERRY
073092
LICENSED PROFESSIONAL ENGINEER
2/6/2012

UNLESS OTHERWISE NOTED, LINEAR DIMENSIONS SHOWN ARE IN METERS.

DESIGN COMPLETE SUBMITTAL

SYMB	DESCRIPTION	DATE	APR
FNL	DESIGN COMPLETE SUBMITTAL	02-06-12	KCT

DESIGNED BY: DCG
DATE: 02-06-2012
DRAWN BY: BCL
SUBMITTED BY: TETRA TECH
CHECKED BY: GPD
FILE NO.: AF1202A-P600DI

TETRA TECH

US Army Corps of Engineers
Middle East District

COMMAND & CONTROL FACILITY
KANDAHAR AIR FIELD, AFGHANISTAN
COMMAND & CONTROL FACILITY
PLUMBING WATER RISER DIAGRAM

SHEET REFERENCE NUMBER:
A
P-600

W:\23308\127-23308-11004\CAD\MED Drawings\AF1202\AF1202A\Plumbing\AF1202A-P600DI.dwg 3/7/2012 9:42:53 AM Jeffers, Scott

ELECTRIC WATER HEATER SCHEDULE

DESIGNATION	NO. REQUIRED	MANUFACTURER AND MODEL NUMBER	STORAGE WATER TEMPERATURE (°C)/(°F)	VOLUME/HEATER (LIT)/(GAL)	RECOVERY/HEATER (LPH)/(GPH)	TEMPERATURE RISE (°C)/(°F)	ELECTRIC LOAD (KW)	VOLTS	PHASE	HERTZ	WWP (PSIG)	TEST PRESSURE (PSIG)	DIAMETER (mm)/(in)	HEIGHT (mm)/(in)	LOCATION
EWH	2	A.O. SMITH MODEL # DEL-40-9 OR APPROVED EQUAL	60/140	151/90	138/36	37.8/100	9	480	3	60	150	300	610/24	819/32.25	MECH ROOM

NOTES:
EXPANSION TANK: TOTAL VOLUME 24 LITERS (6.4GAL) WITH A MAX ACCEPTANCE VOLUME OF 12L (3.2GAL) SIMILAR TO AMTROL ST-12-C OR APPROVED EQUAL.

CIRC PUMP: SINGLE STAGE CENTRIFUGAL PUMP, BRONZE OR STAINLESS STEEL BODY WITH TOTALLY ENCLOSED FAN COOLED MOTOR CAPABLE OF PUMPING 12 LPM AT 14 KPA.

PLUMBING FIXTURE SCHEDULE

SYMBOL	FIXTURE NAME	CW (mm)	HW (mm)	WASTE (mm)	VENT (mm)	REMARKS
	WESTERN WATER CLOSET (FLUSH TANK)	15	--	100	50	ELONGATED BOWL, FLOOR MOUNTED FLUSH TANK
	LAVATORY	15	15	50	32	
	MOP SINK FLOOR MOUNT (JANITOR'S TYPE)	20	20	50	50	FLOOR MOUNT JANITOR TYPE
	FLOOR DRAIN	--	--	100	50	
	SINK	15	15	50	32	

FLOOR CLEAN OUT SCHEDULE

FCO "A"	WIDE FLANGE TYPE
FCO "B"	ADJUSTABLE STAINER TYPE

FLOOR DRAIN SCHEDULE

FD "A"	WIDE FLANGE TYPE
FD "B"	ADJUSTABLE STAINER TYPE

THESE DRAWINGS ARE "NOT APPROVED FOR CONSTRUCTION" SINCE THESE ARE BASED UPON ASSUMED CONDITIONS. THE CONTRACTOR SHALL NOT PROCEED WITH CONSTRUCTION UNTIL THE ASSUMED CONDITIONS ARE VALIDATED AND APPROVAL IS RECEIVED FROM THE CONTRACTING OFFICER.

STATE OF NEW YORK · KEVIN CHARLES TERRY · 079092 · LICENSED PROFESSIONAL ENGINEER

2/6/2012

UNLESS OTHERWISE NOTED, LINEAR DIMENSIONS SHOWN ARE IN METERS.

DESIGN COMPLETE SUBMITTAL

SYMB	DESCRIPTION	DATE	APR
FNL	DESIGN COMPLETE SUBMITTAL	02-06-12	KCT

DESIGNED BY: DCG
DATE: 02-06-2012
DRAWN BY: BCL
SUBMITTED BY: TETRA TECH
CHECKED BY: GPD
FILE NO.: AF1202A-P601SC

TETRA TECH

US Army Corps of Engineers
Middle East District

COMMAND & CONTROL FACILITY
KANDAHAR AIR FIELD, AFGHANISTAN
COMMAND & CONTROL FACILITY
PLUMBING SCHEDULES

SHEET REFERENCE NUMBER:
A
P-601

W:\23308\127-23308-11004\CAD\MED Drawings\AF1202\AF1202A\Plumbing\AF1202A-P601SC.dwg 3/7/2012 9:43:15 AM Jeffers, Scott

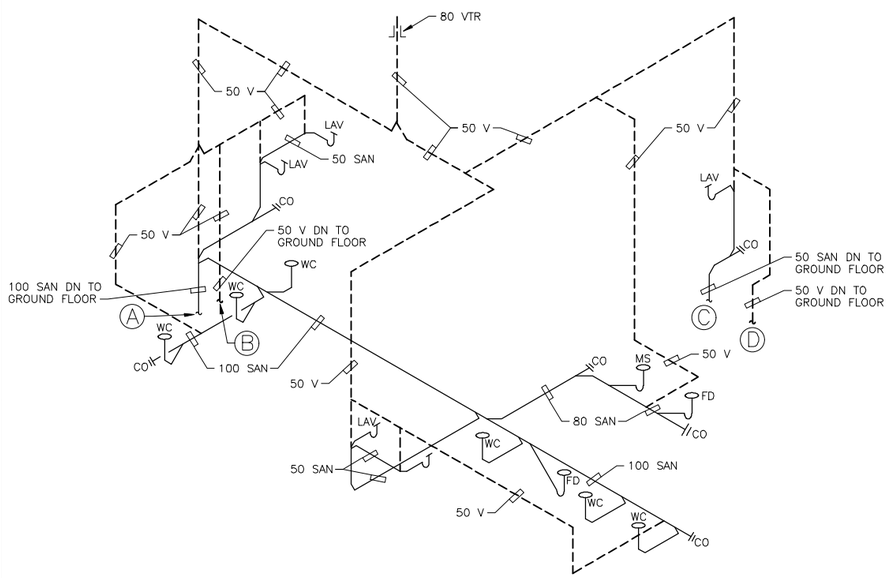

FIRST FLOOR
SANITARY WASTE AND VENT ISOMETRIC
NOT TO SCALE

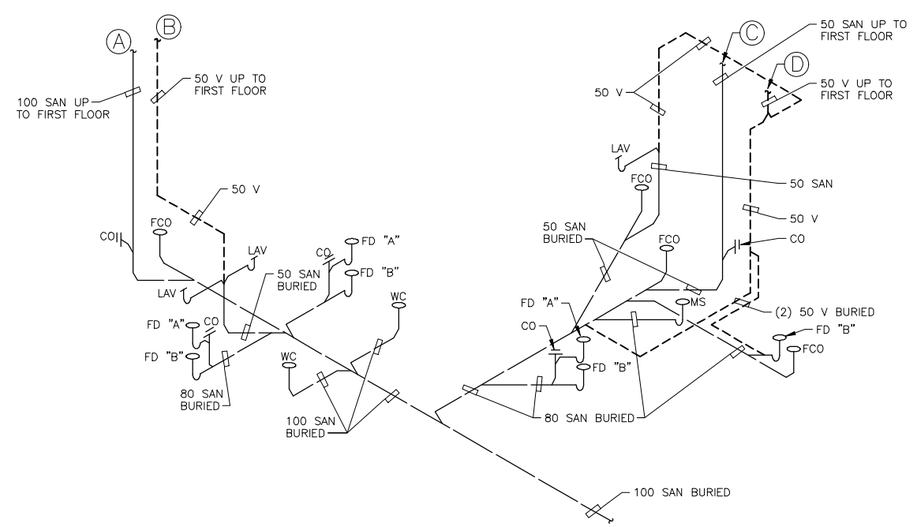

GROUND FLOOR
SANITARY WASTE AND VENT ISOMETRIC
NOT TO SCALE

THESE DRAWINGS ARE "NOT APPROVED FOR CONSTRUCTION" SINCE THESE ARE BASED UPON ASSUMED CONDITIONS. THE CONTRACTOR SHALL NOT PROCEED WITH CONSTRUCTION UNTIL THE ASSUMED CONDITIONS ARE VALIDATED AND APPROVAL IS RECEIVED FROM THE CONTRACTING OFFICER.

STATE OF NEW YORK · KEVIN CHARLES TERI · 073082 · LICENSED PROFESSIONAL ENGINEER
2/6/2012

UNLESS OTHERWISE NOTED, LINEAR DIMENSIONS SHOWN ARE IN METERS.

DESIGN COMPLETE SUBMITTAL

SYMB	DESCRIPTION	DATE	APR
FNL	DESIGN COMPLETE SUBMITTAL	02-06-12	KCT

DESIGNED BY: DCG
DRAWN BY: BCL
CHECKED BY: GPD
DATE: 02-06-2012
SUBMITTED BY: TETRA TECH
FILE NO.: AF1202A-P900IS

TETRA TECH

US Army Corps of Engineers
Middle East District

COMMAND & CONTROL FACILITY
KANDAHAR AIR FIELD, AFGHANISTAN
COMMAND & CONTROL FACILITY
SANITARY AND VENT ISOMETRICS

SHEET REFERENCE NUMBER:
A
P-900

W:\23308\127-23308-11004\CAD\MED Drawings\AF1202\AF1202A\Plumbing\AF1202A-P900IS.dwg 3/7/2012 9:43:38 AM Jeffers, Scott

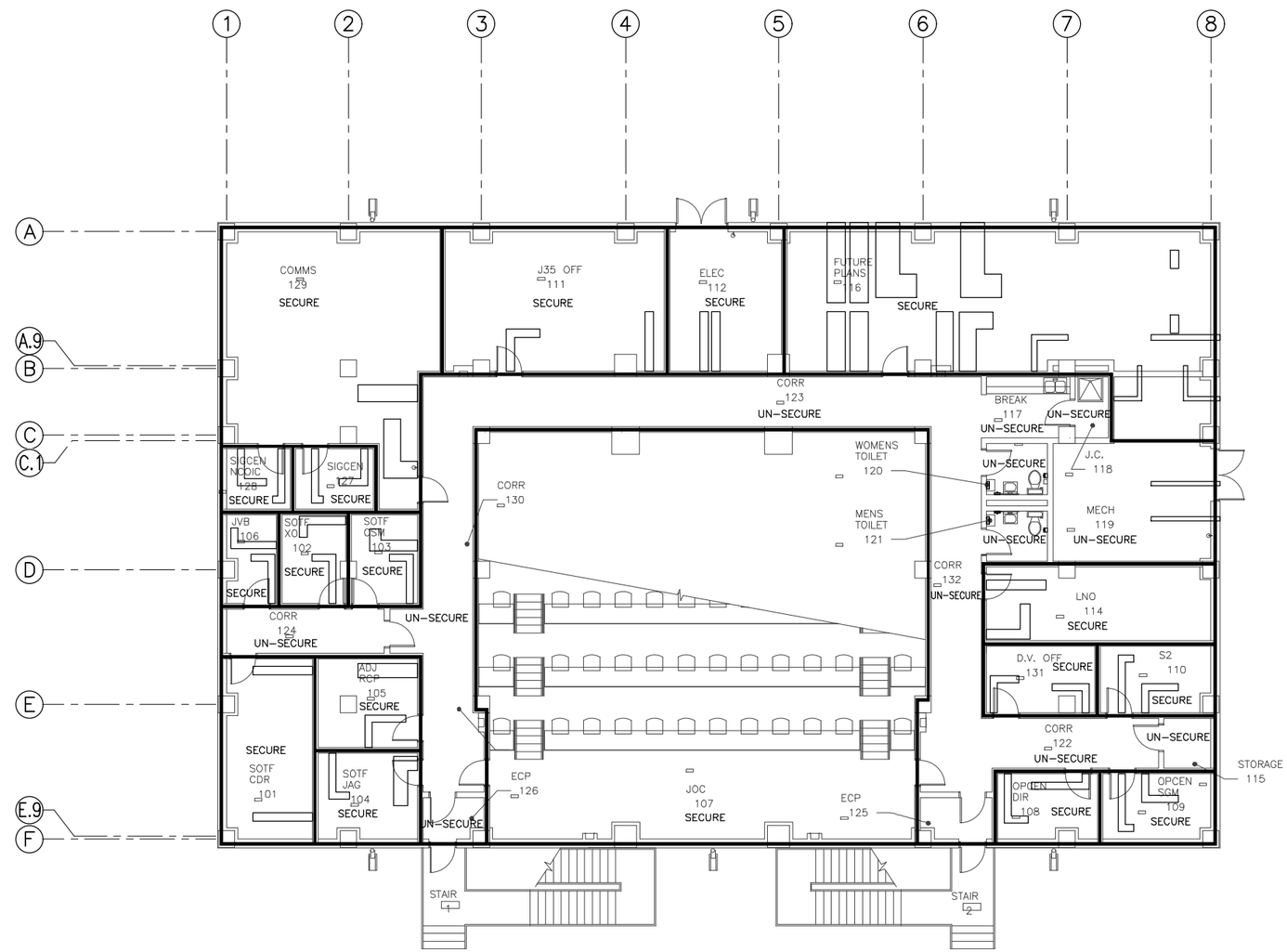

GROUND FLOOR MECHANICAL SECURE AREA PLAN
SCALE 1:100

1:100

THESE DRAWINGS ARE "NOT APPROVED FOR CONSTRUCTION" SINCE THESE ARE BASED UPON ASSUMED CONDITIONS. THE CONTRACTOR SHALL NOT PROCEED WITH CONSTRUCTION UNTIL THE ASSUMED CONDITIONS ARE VALIDATED AND APPROVAL IS RECEIVED FROM THE CONTRACTING OFFICER.

STATE OF NEW YORK · KEVIN CHARLES TEGRI · 079082 · LICENSED PROFESSIONAL ENGINEER

2/6/2012

UNLESS OTHERWISE NOTED, LINEAR DIMENSIONS SHOWN ARE IN METERS.

DESIGN COMPLETE SUBMITTAL

SYMB	DESCRIPTION	DATE	APR
FNL	DESIGN COMPLETE SUBMITTAL	02-06-12	KCT

DESIGNED BY: SRZ
DATE: 02-06-2012
DRAWN BY: BNL
SUBMITTED BY: TETRA TECH
CHECKED BY: KCT
FILE NO.: AF1202A-M100PN

TETRA TECH

US Army Corps of Engineers
Middle East District

COMMAND & CONTROL FACILITY
KANDAHAR AIR FIELD, AFGHANISTAN
COMMAND & CONTROL FACILITY
GROUND FLOOR MECHANICAL SECURE AREA PLAN

SHEET REFERENCE NUMBER:
A
M-100

W:\23308\127-23308-11004\CAD\MED Drawings\AF1202\AF1202A\Mechanical\AF1202A-M100PN.dwg 3/7/2012 9:44:05 AM Jeffers, Scott

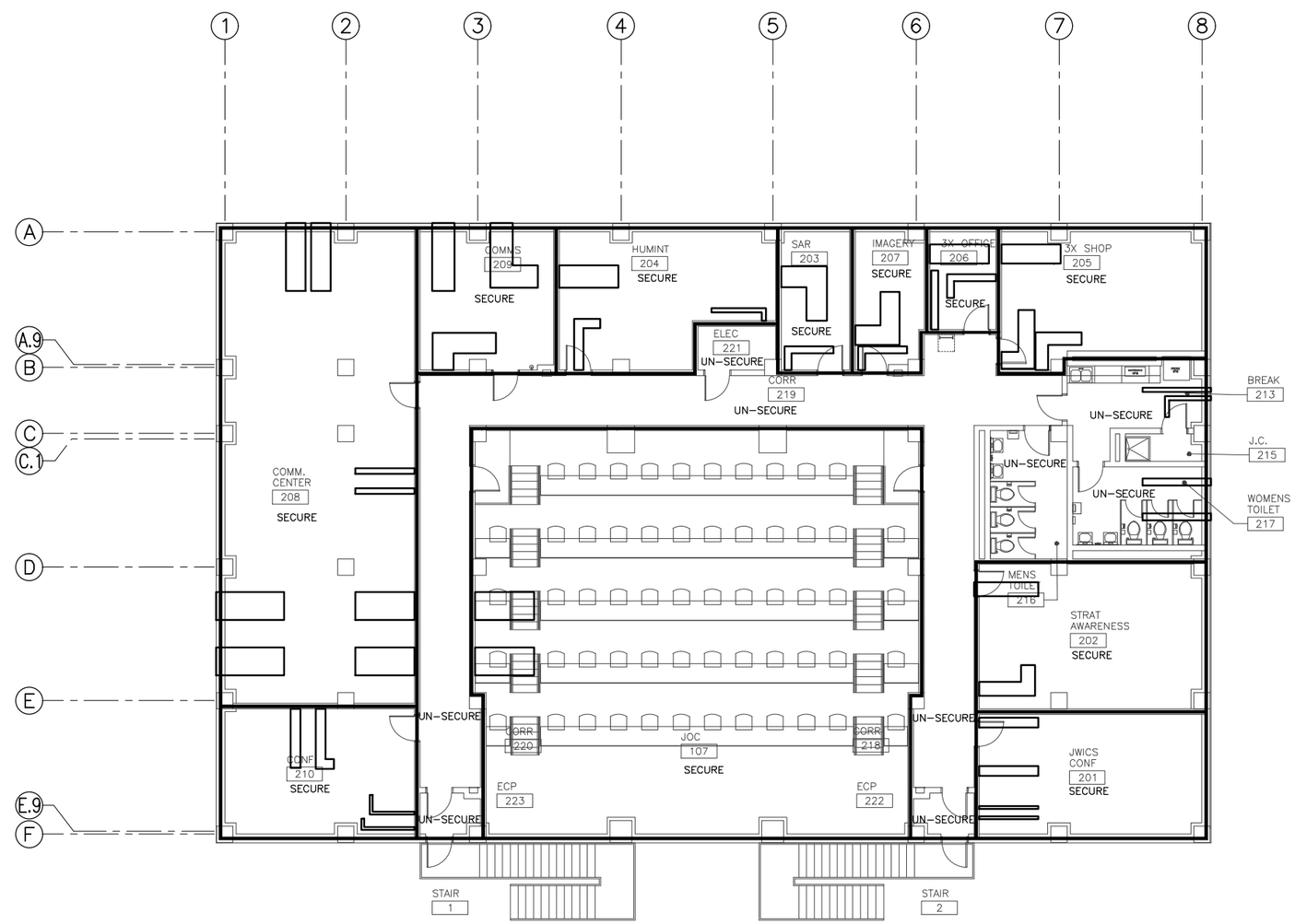

FIRST FLOOR MECHANICAL SECURE AREA PLAN
SCALE 1:100

1 0 1 2 3 4 5 6 7 8 9
1:100

THESE DRAWINGS ARE "NOT APPROVED FOR CONSTRUCTION" SINCE THESE ARE BASED UPON ASSUMED CONDITIONS. THE CONTRACTOR SHALL NOT PROCEED WITH CONSTRUCTION UNTIL THE ASSUMED CONDITIONS ARE VALIDATED AND APPROVAL IS RECEIVED FROM THE CONTRACTING OFFICER.

STATE OF NEW YORK · KEVIN CHARLES TERRY · 073082 · LICENSED PROFESSIONAL ENGINEER
2/6/2012

UNLESS OTHERWISE NOTED, LINEAR DIMENSIONS SHOWN ARE IN METERS.

DESIGN COMPLETE SUBMITTAL

STAB	DESCRIPTION	DATE	
FNL	DESIGN COMPLETE SUBMITTAL	02-06-12	KCT APR

DESIGNED BY: SRZ
DATE: 02-06-2012
DRAWN BY: BNL
SUBMITTED BY: TETRA TECH
CHECKED BY: KCT
FILE NO.: AF1202A-M101PN

TETRA TECH

US Army Corps of Engineers
Middle East District

COMMAND & CONTROL FACILITY
KANDAHAR AIR FIELD, AFGHANISTAN
COMMAND & CONTROL FACILITY
FIRST FLOOR MECHANICAL SECURE AREA PLAN

SHEET REFERENCE NUMBER:
A
M-101

W:\23308\127-23308-11004\CAD\MED Drawings\AF1202\AF1202A\Mechanical\AF1202A-M101PN.dwg 3/7/2012 9:44:30 AM Jeffers, Scott

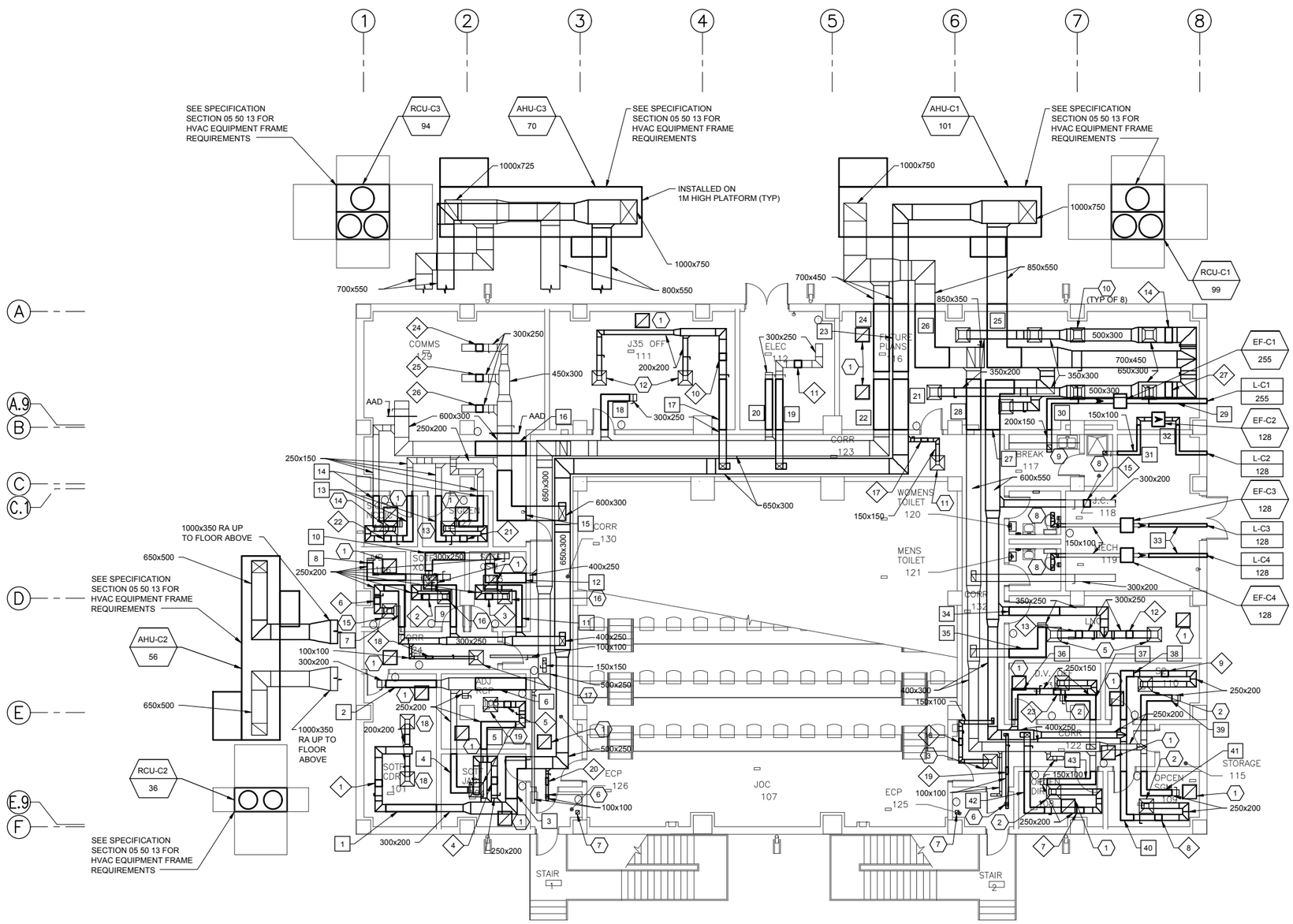

GENERAL NOTES:

1. REFER TO DRAWING M-112 FOR KEY NOTES.
2. ALL RETURN DUCTS ARE OPEN ENDED AND ARE TO HAVE WMM ON THE ENDS. CEILINGS ARE TO BE USED AS A RETURN AIR PLENUM.

GROUND FLOOR MECHANICAL PLAN

SCALE 1:100

1:100

THESE DRAWINGS ARE "NOT APPROVED FOR CONSTRUCTION" SINCE THESE ARE BASED UPON ASSUMED CONDITIONS. THE CONTRACTOR SHALL NOT PROCEED WITH CONSTRUCTION UNTIL THE ASSUMED CONDITIONS ARE VALIDATED AND APPROVAL IS RECEIVED FROM THE CONTRACTING OFFICER.

STATE OF NEW YORK · KEVIN CHARLES TERRY · 075083 · LICENSED PROFESSIONAL ENGINEER

2/6/2012

UNLESS OTHERWISE NOTED, LINEAR DIMENSIONS SHOWN ARE IN METERS.

DESIGN COMPLETE SUBMITTAL

SYMB	DESCRIPTION	DATE	APR
FNL	DESIGN COMPLETE SUBMITTAL	02-06-12	KCT

DESIGNED BY: SRZ
DRAWN BY: BNL
CHECKED BY: KCT
DATE: 02-06-2012
SUBMITTED BY: TETRA TECH
FILE NO.: AF1202A-M110PN

TETRA TECH

US Army Corps of Engineers Middle East District

COMMAND & CONTROL FACILITY
KANDAHAR AIR FIELD, AFGHANISTAN
COMMAND & CONTROL FACILITY
GROUND FLOOR MECHANICAL PLAN

SHEET REFERENCE NUMBER:
A
M-110

W:\23308\127-23308-11004\CAD\MED Drawings\AF1202\AF1202A\Mechanical\AF1202A-M110PN.dwg 3/7/2012 9:44:58 AM Jeffers, Scott

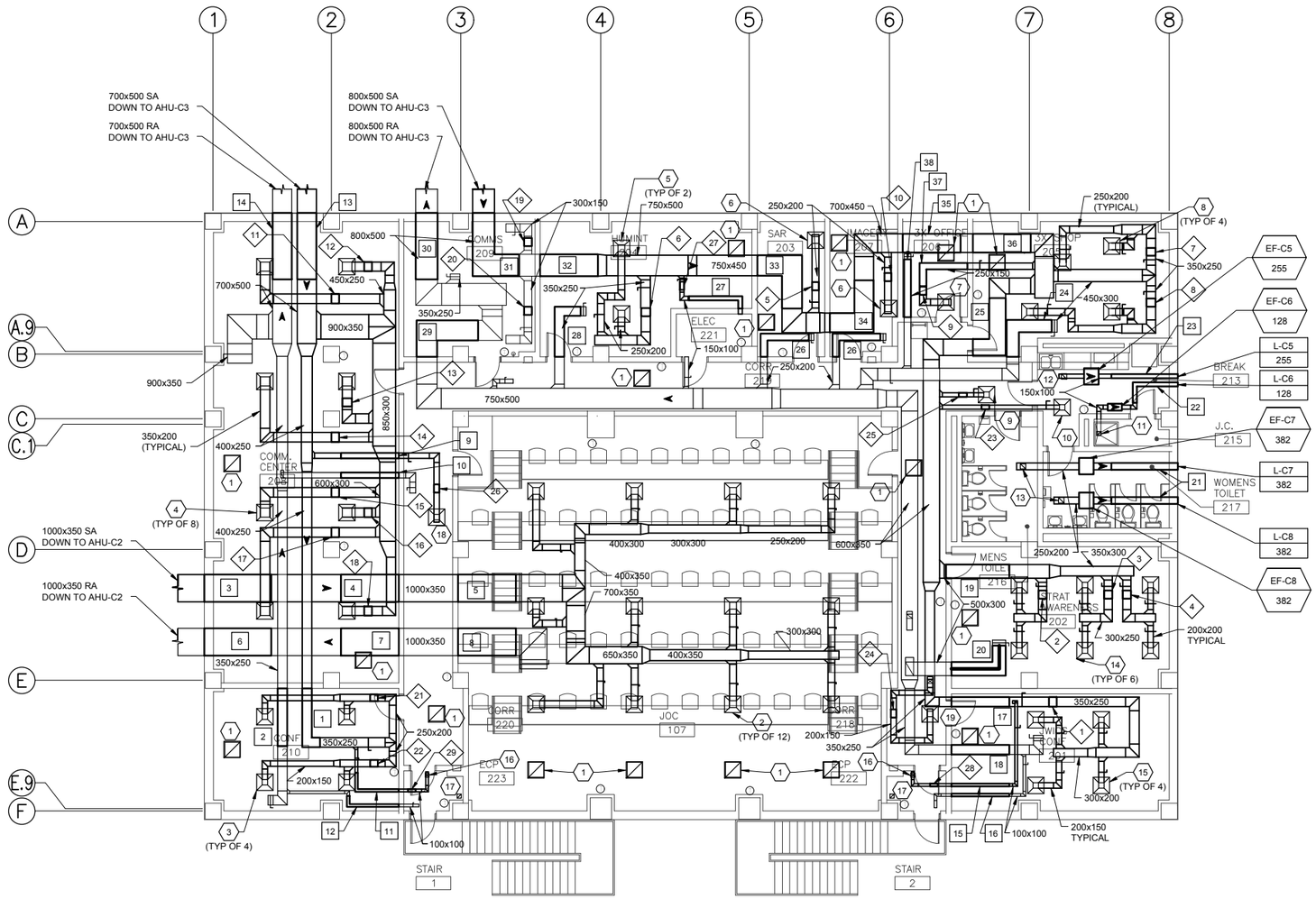

GENERAL NOTES:

1. REFER TO DRAWING M-112 FOR KEY NOTES.
2. ALL RETURN DUCTS ARE OPEN ENDED AND ARE TO HAVE WWM ON THE ENDS. CEILINGS ARE TO BE USED AS A RETURN AIR PLENUM.

FIRST FLOOR MECHANICAL PLAN

SCALE 1:100

1 0 1 2 3 4 5 6 7 8 9
1:100

THESE DRAWINGS ARE "NOT APPROVED FOR CONSTRUCTION" SINCE THESE ARE BASED UPON ASSUMED CONDITIONS. THE CONTRACTOR SHALL NOT PROCEED WITH CONSTRUCTION UNTIL THE ASSUMED CONDITIONS ARE VALIDATED AND APPROVAL IS RECEIVED FROM THE CONTRACTING OFFICER.

STATE OF NEW YORK
KEVIN CHARLES TERRY
073682
LICENSED PROFESSIONAL ENGINEER
2/6/2012

UNLESS OTHERWISE NOTED, LINEAR DIMENSIONS SHOWN ARE IN METERS.

DESIGN COMPLETE SUBMITTAL

SYMB	DESCRIPTION	DATE	APR
FNL	DESIGN COMPLETE SUBMITTAL	02-06-12	KCT

DESIGNED BY: SRZ
DATE: 02-06-2012
DRAWN BY: BNL
SUBMITTED BY: TETRA TECH
CHECKED BY: KCT
FILE NO.: AF1202A-M111PN

TETRA TECH

US Army Corps of Engineers
Middle East District

COMMAND & CONTROL FACILITY
KANDAHAR AIR FIELD, AFGHANISTAN
COMMAND & CONTROL FACILITY
FIRST FLOOR MECHANICAL PLAN

SHEET REFERENCE NUMBER:
A
M-111

W:\23308\127-23308-11004\CAD\MED Drawings\AF1202\AF1202A\Mechanical\AF1202A-M111PN.dwg 3/7/2012 9:45:25 AM Jeffers, Scott

KEY NOTES FOR DRAWING M-110:

1	RHC-C1 3.0	14	RHC-C15 12.0	27	RHC-C16 12.0	13	SA-1 200x200 250	7	SA-C7 485	20	SA-C20 870	33	SA-C33 128
2	RHC-C2 1.5	15	RHC-C24 2.0	1	RA-1 550x550 OPEN	14	SA-1 200x200 265	8	SA-C8 485	21	SA-C21 9845	34	SA-C34 1400
3	RHC-C3 1.5	16	RHC-C25 0.5	2	SA-1 200x200 500	15	SA-1 200x200 485	9	SA-C9 460	22	SA-C22 9845	35	SA-C35 1400
4	RHC-C4 2.0	17	RHC-C26 1.0	3	SA-1 150x150 145	16	SA-1 200x200 460	10	SA-C10 945	23	SA-C23 9845	36	SA-C36 265
5	RHC-C5 2.0	18	RHC-C27 0.5	4	SA-1 200x200 265	17	SA-1 150x150 65	11	SA-C11 460	24	SA-C24 9845	37	SA-C37 265
6	RHC-C6 2.0	19	RHC-C28 0.5	5	SA-1 300x300 700	18	SA-1 200x200 420	12	SA-C12 1405	25	SA-C25 10565	38	SA-C38 500
7	RHC-C7 2.0	20	RHC-C29 0.5	6	SA-2 150x150 65	19	SA-1 250x250 500	13	SA-C13 265	26	SA-C26 10565	39	SA-C39 500
8	RHC-C8 2.0	21	RHC-C30 1.0	7	EA-1 150x150 OPEN	1	SA-C1 840	14	SA-C14 265	27	SA-C27 3945	40	SA-C40 500
9	RHC-C9 2.0	22	RHC-C31 1.0	8	EA-1 150x150 128	2	SA-C2 840	15	SA-C15 3680	28	SA-C28 3945	41	SA-C41 500
10	RHC-C10 3.0	23	RHC-C32 1.0	9	EA-1 200x200 255	3	SA-C3 1840	16	SA-C16 3680	29	SA-C29 255	42	SA-C42 500
11	RHC-C11 3.0	24	RHC-C33 3.0	10	SA-1 350x350 825	4	SA-C4 500	17	SA-C17 920	30	SA-C30 255	43	SA-C43 500
12	RHC-C12 2.5	25	RHC-C34 3.0	11	SA-1 150x150 225	5	SA-C5 500	18	SA-C18 920	31	SA-C31 128		
13	RHC-C13 2.5	26	RHC-C35 3.0	12	SA-1 200x200 460	6	SA-C6 1840	19	SA-C19 870	32	SA-C32 128		

KEY NOTES FOR DRAWINGS M-111:

1	RHC-C36 4.0	14	RHC-C49 3.0	27	RHC-C62 0.5	11	EA-1 150x150 128	5	SA-C48 6960	18	SA-C61 1260	31	SA-C74 9650
2	RHC-C37 3.0	15	RHC-C50 3.0	28	RHC-C63 0.5	12	EA-1 200x200 255	6	SA-C49 6960	19	SA-C62 2490	32	SA-C75 8590
3	RHC-C38 3.0	16	RHC-C51 3.0	29	RHC-C64 0.5	13	EA-1 200x200 382	7	SA-C50 6960	20	SA-C63 2490	33	SA-C76 7310
4	RHC-C39 3.0	17	RHC-C52 3.0	1	RA-1 550x550 OPEN	14	SA-1 200x200 415	8	SA-C51 6960	21	SA-C64 382	34	SA-C77 6760
5	RHC-C40 2.0	18	RHC-C53 3.0	2	SA-1 250x250 580	15	SA-1 200x200 300	9	SA-C52 180	22	SA-C65 128	35	SA-C78 6210
6	RHC-C41 4.0	19	RHC-C54 2.0	3	SA-1 200x200 290	16	SA-2 150x150 60	10	SA-C53 180	23	SA-C66 255	36	SA-C79 6210
7	RHC-C42 3.5	20	RHC-C55 2.0	4	SA-1 350x350 800	17	EA-1 150x150 OPEN	11	SA-C54 60	24	SA-C67 2040	37	SA-C80 275
8	RHC-C43 3.5	21	RHC-C56 2.0	5	SA-1 250x250 560	18	SA-1 200x200 180	12	SA-C55 60	25	SA-C68 4265	38	SA-C81 275
9	RHC-C44 1.5	22	RHC-C57 2.0	6	SA-1 250x250 550	19	SA-1 200x200 240	13	SA-C56 7810	26	SA-C69 550		
10	RHC-C45 2.0	23	RHC-C58 0.5	7	SA-1 200x200 275	1	SA-C44 1230	14	SA-C57 7810	27	SA-C70 160		
11	RHC-C46 3.0	24	RHC-C59 1.0	8	SA-1 250x250 510	2	SA-C45 1230	15	SA-C58 60	28	SA-C71 1120		
12	RHC-C47 3.0	25	RHC-C60 0.5	9	SA-1 200x200 180	3	SA-C46 6960	16	SA-C59 60	29	SA-C72 8590		
13	RHC-C48 3.0	26	RHC-C61 0.5	10	SA-1 200x200 95	4	SA-C47 6960	17	SA-C60 1260	30	SA-C73 9650		

1 0 1 2 3 4 5 6 7 8 9
1:100

THESE DRAWINGS ARE "NOT APPROVED FOR CONSTRUCTION" SINCE THESE ARE BASED UPON ASSUMED CONDITIONS. THE CONTRACTOR SHALL NOT PROCEED WITH CONSTRUCTION UNTIL THE ASSUMED CONDITIONS ARE VALIDATED AND APPROVAL IS RECEIVED FROM THE CONTRACTING OFFICER.

STATE OF NEW YORK · KEVIN CHARLES TERRY · 079082 · LICENSED PROFESSIONAL ENGINEER

2/6/2012

UNLESS OTHERWISE NOTED, LINEAR DIMENSIONS SHOWN ARE IN METERS.

DESIGN COMPLETE SUBMITTAL

STAB	DESCRIPTION	DATE	APR
FNL	DESIGN COMPLETE SUBMITTAL	02-06-12	KCT

DESIGNED BY: SRZ
DATE: 02-06-2012
DRAWN BY: BNL
SUBMITTED BY: TETRA TECH
CHECKED BY: KCT
FILE NO.: AF1202A-M112PN

TETRA TECH

US Army Corps of Engineers
Middle East District

COMMAND & CONTROL FACILITY
KANDAHAR AIR FIELD, AFGHANISTAN
COMMAND & CONTROL FACILITY
KEY NOTES

SHEET REFERENCE NUMBER:
A
M-112

W:\23308\127-23308-11004\CAD\MED Drawings\AF1202\AF1202A\Mechanical\AF1202A-M112PN.dwg 3/7/2012 9:45:51 AM Jeffers, Scott

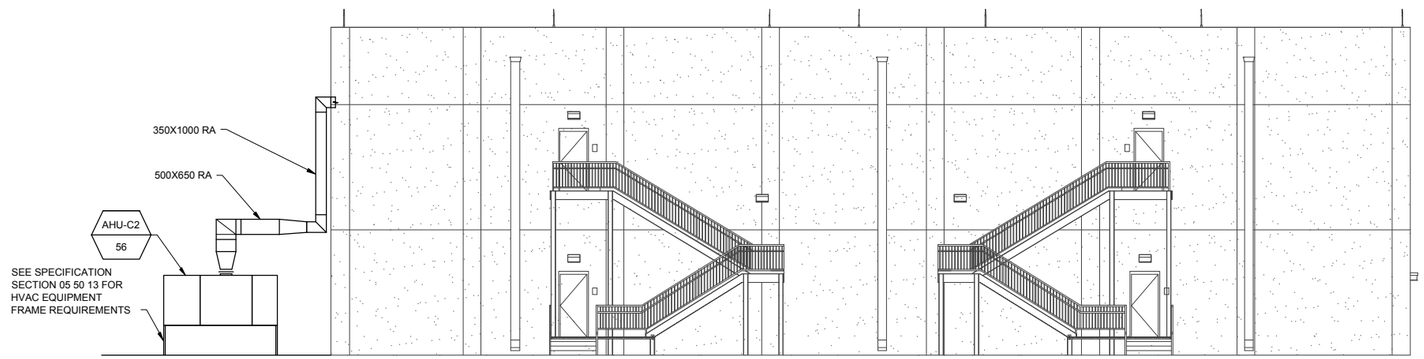

MECHANICAL PLAN – SOUTH ELEVATION (1)
SCALE 1:100
M-110, M-111 | M-200

NOTES:
1. INSULATE AND WEATHERIZE ALL EXTERIOR DUCTWORK.
2. INSTALL ALL AHU AND RCU ON STRUCTURAL PLATFORMS REFER TO THE PLATFORM DETAIL.
3. DUCT PENETRATIONS INTO BUILDING REFER TO DRAWING SM-502

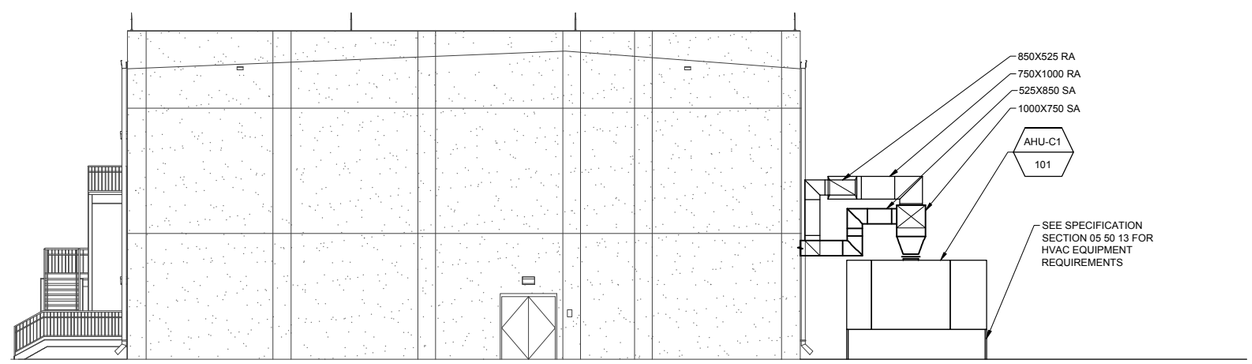

MECHANICAL PLAN – EAST ELEVATION (2)
SCALE 1:100
M-110, M-111 | M-200

1 0 1 2 3 4 5 6 7 8 9
1:100

THESE DRAWINGS ARE "NOT APPROVED FOR CONSTRUCTION" SINCE THESE ARE BASED UPON ASSUMED CONDITIONS. THE CONTRACTOR SHALL NOT PROCEED WITH CONSTRUCTION UNTIL THE ASSUMED CONDITIONS ARE VALIDATED AND APPROVAL IS RECEIVED FROM THE CONTRACTING OFFICER.

STATE OF NEW YORK · KEVIN CHARLES TERRY · 079083 · LICENSED PROFESSIONAL ENGINEER
2/6/2012

UNLESS OTHERWISE NOTED, LINEAR DIMENSIONS SHOWN ARE IN METERS.

DESIGN COMPLETE SUBMITTAL

SYMB	DESCRIPTION	DATE	APR
FNL	DESIGN COMPLETE SUBMITTAL	02-06-12	KCT

DESIGNED BY: SRZ
DRAWN BY: BNL
CHECKED BY: KCT
DATE: 02-06-2012
SUBMITTED BY: TETRA TECH
FILE NO.: AF1202A-M200EL

TETRA TECH

US Army Corps of Engineers
Middle East District

COMMAND & CONTROL FACILITY
KANDAHAR AIR FIELD, AFGHANISTAN
COMMAND & CONTROL FACILITY
MECHANICAL PLAN – ELEVATIONS

SHEET REFERENCE NUMBER:
A
M-200

W:\23308\127-23308-11004\CAD\MED Drawings\AF1202\AF1202A\Mechanical\AF1202A-M200EL.dwg 3/7/2012 9:46:19 AM Jeffers, Scott

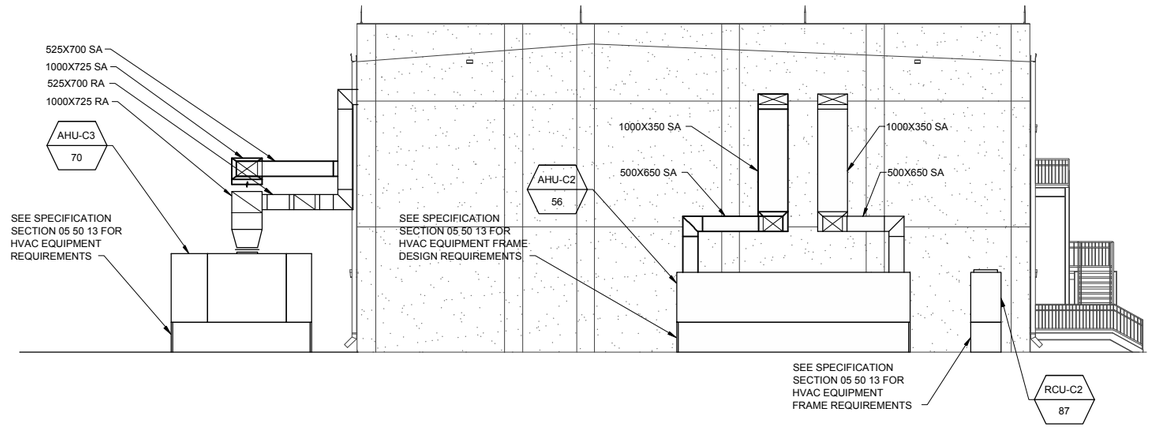

WEST MECHANICAL PLAN – ELEVATIONS

SCALE 1:100

3 M–110, M–111 | M–200

NOTES
1. INSULATE AND WEATHERIZE ALL EXTERIOR DUCTWORK.
2. INSTALL ALL AHU AND RCU ON STRUCTURAL PLATFORMS REFER TO THE PLATFORM DETAIL.
3. DUCT PENETRATIONS INTO BUILDING REFER TO DRAWING SM-502

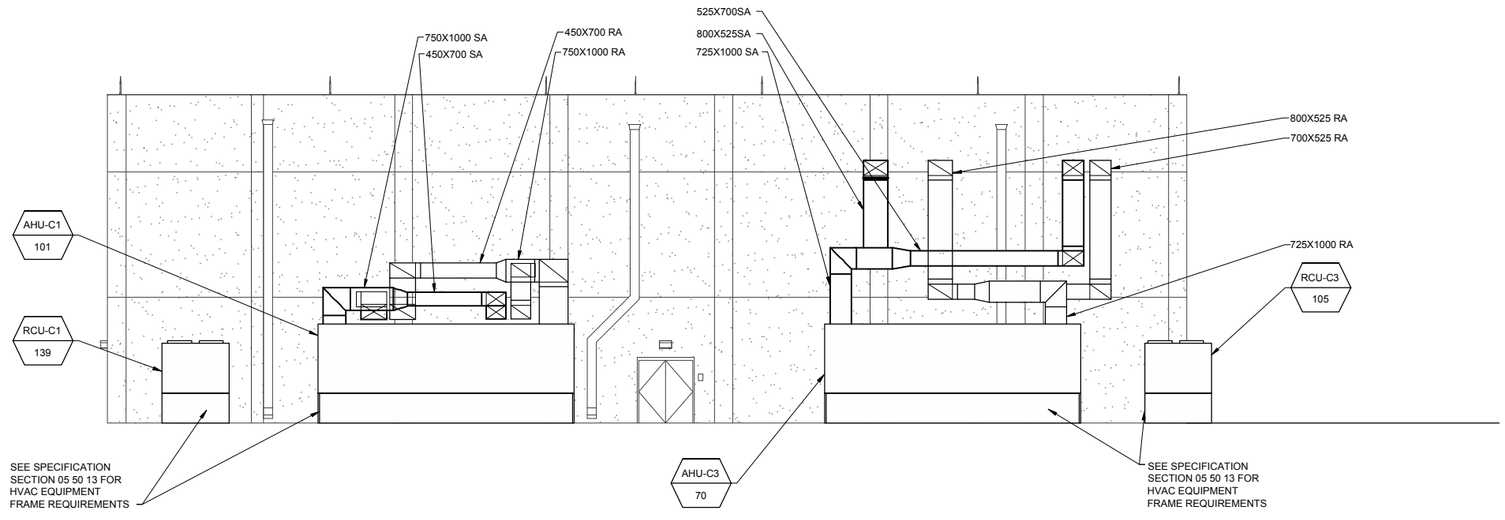

NORTH MECHANICAL PLAN – ELEVATIONS

SCALE 1:100

4 M–110, M–111 | M–200

1 0 1 2 3 4 5 6 7 8 9
1:100

THESE DRAWINGS ARE "NOT APPROVED FOR CONSTRUCTION" SINCE THESE ARE BASED UPON ASSUMED CONDITIONS. THE CONTRACTOR SHALL NOT PROCEED WITH CONSTRUCTION UNTIL THE ASSUMED CONDITIONS ARE VALIDATED AND APPROVAL IS RECEIVED FROM THE CONTRACTING OFFICER.

STATE OF NEW YORK · KEVIN CHARLES TERRY · 073682 · LICENSED PROFESSIONAL ENGINEER
2/6/2012

UNLESS OTHERWISE NOTED, LINEAR DIMENSIONS SHOWN ARE IN METERS.

DESIGN COMPLETE SUBMITTAL

STAB	DESCRIPTION	DATE	APR
FNL	DESIGN COMPLETE SUBMITTAL	02–06–12	KCT

DESIGNED BY: SRZ
DRAWN BY: BNL
CHECKED BY: KCT
DATE: 02–06–2012
SUBMITTED BY: TETRA TECH
FILE NO.: AF1202A–M201EL

TETRA TECH

US Army Corps of Engineers
Middle East District

COMMAND & CONTROL FACILITY
KANDAHAR AIR FIELD, AFGHANISTAN
COMMAND & CONTROL FACILITY
MECHANICAL PLAN – ELEVATIONS

SHEET REFERENCE NUMBER:
A
M–201

W:\23308\127–23308–11004\CAD\MED Drawings\AF1202\AF1202A\Mechanical\AF1202A–M201EL.dwg 3/7/2012 9:46:50 AM Jeffers, Scott

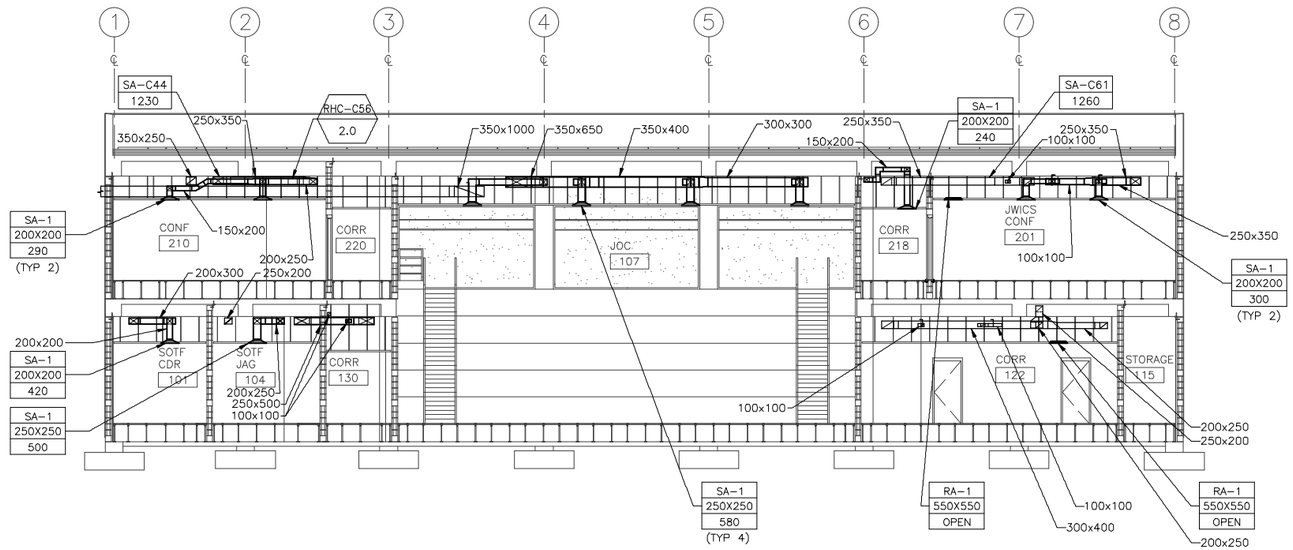

MECHANICAL PLAN – SECTIONS (1)
SCALE 1:100
M-110, M-111 | M-200

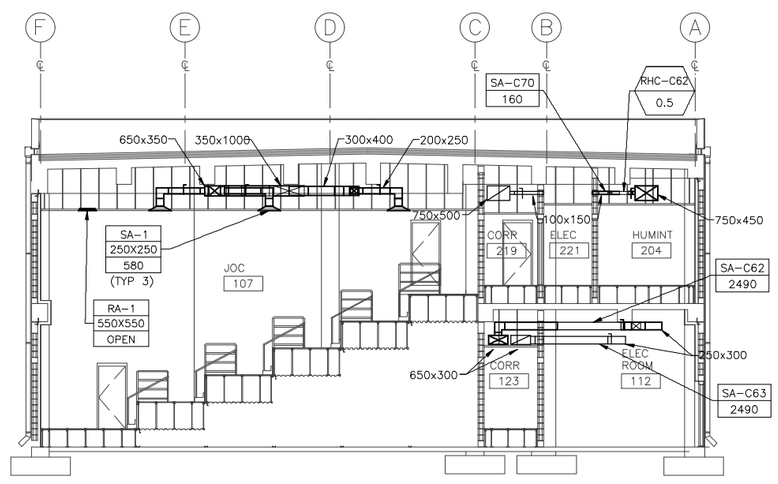

MECHANICAL PLAN – SECTIONS (2)
SCALE 1:100
M-110, M-111 | M-200

1 0 1 2 3 4 5 6 7 8 9
1:100

THESE DRAWINGS ARE "NOT APPROVED FOR CONSTRUCTION" SINCE THESE ARE BASED UPON ASSUMED CONDITIONS. THE CONTRACTOR SHALL NOT PROCEED WITH CONSTRUCTION UNTIL THE ASSUMED CONDITIONS ARE VALIDATED AND APPROVAL IS RECEIVED FROM THE CONTRACTING OFFICER.

STATE OF NEW YORK · KEVIN CHARLES TERRY · 073082 · LICENSED PROFESSIONAL ENGINEER
2/6/2012

UNLESS OTHERWISE NOTED, LINEAR DIMENSIONS SHOWN ARE IN METERS.

DESIGN COMPLETE SUBMITTAL

SYMB	DESCRIPTION	DATE	APR
FNL	DESIGN COMPLETE SUBMITTAL	02-06-12	KCT

DESIGNED BY: SRZ
DATE: 02-06-2012
DRAWN BY: BNL
SUBMITTED BY: TETRA TECH
CHECKED BY: KCT
FILE NO.: AF1202A-M300SE

TETRA TECH

US Army Corps of Engineers
Middle East District

COMMAND & CONTROL FACILITY
KANDAHAR AIR FIELD, AFGHANISTAN
COMMAND & CONTROL FACILITY
MECHANICAL PLAN – SECTIONS

SHEET REFERENCE NUMBER:
A
M-300

W:\23308\127-23308-11004\CAD\MED Drawings\AF1202\AF1202A\Mechanical\AF1202A-M300SE.dwg 3/7/2012 9:47:34 AM Jeffers, Scott

AIR HANDLING UNIT SCHEDULE - (AHU)

DWG LABEL	SERVES	MODEL NO.	SA M^3/HR (CFM)	MIN OA	ELEC. RESISTANCE			DIRECT EXPAN. COIL				SUPPLY FAN		RETURN FAN		ELECTRICAL		NOTES
					EAT °C(°F)	LAT °C(°F)	CAPACITY KW (MBH)	EDB °C(°F)	EWB °C(°F)	TC KW (TONS)	SC KW (MBH)	ESP (mm WC)	HP	ESP (mm WC)	HP	MCA	V/PH	
AHU-C1	GROUND FLOOR	SEMI CUSTOM	22130(13025)	2750(1617)	15.6(60)	26(80)	82(281)	27.0(80.6)	17.2(62.9)	114(33)	114(390)	88.9	(2) 25	81.3	(2) 15	--	460/3	1, 2, 3, 4, 5, 6, 7, 8, 9, 10, 11, 12, 13, 14
AHU-C2	JOC 107	SEMI CUSTOM	7820(4600)	765(450)	15.6(60)	26(80)	28(97)	26.7(80.1)	16.8(62.3)	40(11)	40(138)	76.2	(2) 20	63.5	(2) 10	--	460/3	1, 2, 3, 4, 5, 6, 7, 8, 9, 10, 11, 12, 13, 14
AHU-C3	FIRST FLOOR	SEMI CUSTOM	20650(12150)	2620(1540)	15.6(60)	26(80)	76(259)	26.8(80.3)	17.3(63.1)	106(30)	106(363)	106.7	(2) 10	88.9	(2) 5	--	460/3	1, 2, 3, 4, 5, 6, 7, 8, 9, 10, 11, 12, 13, 14

NOTES:
1. DESIGN BASIS: CARRIER RACAN CUSTOM AHU/CARRIER 38 SERIES CONDENSING UNIT.
2. DISCHARGE TEMP AT POINT WHERE AIR LEAVES THE AHU SHALL BE 55° F OR LESS FOR STATED CONDITIONS.
3. REFER TO DRAWING SM-001 FOR EXTERIOR ENVIRONMENTAL DESIGN CONDITIONS.
4. SINGLE POINT POWER CONNECTION FOR AHU AND CONDENSOR, FIELD WIRING FROM AHU AND CONDENSER, FIELD WIRING FROM AHU TO CONDENSER.
5. INCLUDE DISCONNECT ON AHU AND CONDENSING UNIT.
6. AHU CASING TO INCLUDE ADDITIONAL INSULATION TO REDUCE HEAT GAIN.
7. INCLUDE 1 KW HUMIDIFIER WITH 0.5 kg/hr CAPACITY.
8. INCLUDE MANUAL START/STOP.
9. INCLUDE COMPLETE, INTEGRATED, STAND-ALONE AHU CONTROL SYSTEM BY UNIT MANUFACTURER. SPACE/ZONE CONTROL WILL BE BY TEMPERATURE CONTROLLER IN EACH SPACE OR ZONE.
10. INCLUDE DUAL SUPPLY FANS, EACH CAPABLE OF PROVIDING 100% OF DESIGN AIRFLOW FOR 100% BACKUP.
11. INCLUDE SAND LOUVERS ON OUTSIDE AIR INTAKE
12. HEATING SECTION TO INCLUDE ELECTRONIC POWER (SCR) CONTROL FOR 0% TO 100% MODULATION.
13. INCLUDE VFD ON ALL SUPPLY AND RETURN FANS WITH MANUAL SPEED ADJUSTMENT FOR ALL FANS. INCLUDE STATIC PRESSURE INDICATOR ON SUPPLY AND RETURN VISIBLE FROM MANUAL VFD SPEED CONTROL.
14. PROVIDE MANUAL CHANGEOVER OF FAN FROM PRIMARY TO BACKUP/SECONDARY.

ELECTRIC RE-HEAT COILS - (RHC)

LABEL	UNIT LOCATION	MODEL NO.	TYPE	DUCT (WIDTH) (mm)	DUCT (HEIGHT) (mm)	ELECTRIC HEAT (KW)	TEMP RISE (C)	AIRFLOW M^3/HR	ELECTRICAL			NOTES
									V/PH/HZ	FLA	MOP	
RHC-C1	SOTF CDR 101	HF	OPEN	300	200	3.0	8.5	840	277/1/60	10.8	--	1
RHC-C2	SOTF XO 102	HF	OPEN	250	200	1.5	8.5	460	277/1/60	5.4	--	1
RHC-C3	SOTF CSM 103	HF	OPEN	250	200	1.5	8.5	460	277/1/60	5.4	--	1
RHC-C4	SOTF JAG 104	HF	OPEN	250	200	2.0	8.5	500	277/1/60	7.2	--	1
RHC-C5	ADJ RCP 105	HF	OPEN	250	200	2.0	8.5	500	277/1/60	7.2	--	1
RHC-C6	JVB 106	HF	OPEN	250	200	2.0	8.5	485	277/1/60	7.2	--	1
RHC-C7	OPCEN DIR 108	HF	OPEN	250	200	2.0	8.5	500	277/1/60	7.2	--	1
RHC-C8	OPCEN SGM 109	HF	OPEN	250	200	2.0	8.5	500	277/1/60	7.2	--	1
RHC-C9	S2 110	HF	OPEN	250	200	2.0	8.5	500	277/1/60	7.2	--	1
RHC-C10	J35 OFF 111	HF	OPEN	300	250	3.0	8.5	920	277/1/60	10.8	--	1
RHC-C11	ELEC ROOM 112	HF	OPEN	300	250	3.0	8.5	870	277/1/60	10.8	--	1
RHC-C12	LNO 114	HF	OPEN	300	250	2.5	8.5	700	277/1/60	9.0.	--	1
RHC-C13	LNO 114	HF	OPEN	300	250	2.5	8.5	700	277/1/60	9.0.	--	1
RHC-C14	NOT USED	--	--			--	--	--	--	--	--	1
RHC-C15	FUTURE PLANS 116	HF	OPEN	650	300	12.0	8.5	3310	408/3/60	14.4	--	1
RHC-C16	FUTURE PLANS 116	HF	OPEN	650	300	12.0	8.5	3310	408/3/60	14.4	--	1
RHC-C17	NOT USED	--	--			--	--	--	--	--	--	1
RHC-C18	NOT USED	--	--			--	--	--	--	--	--	1
RHC-C19	NOT USED	--	--			--	--	--	--	--	--	1
RHC-C20	NOT USED	--	--			--	--	--	--	--	--	1
RHC-C21	NOT USED	--	--			--	--	--	--	--	--	1
RHC-C22	NOT USED	--	--			--	--	--	--	--	--	1
RHC-C23	NOT USED	--	--			--	--	--	--	--	--	1
RHC-C24	MECH 119	HF	OPEN	300	200	2.0	8.5	570	277/1/60	7.2	--	1
RHC-C25	CORR 122	HF	OPEN	150	100	0.5	8.5	145	277/1/60	1.8	--	1
RHC-C26	CORR 123	HF	OPEN	150	150	1.0	8.5	225	277/1/60	3.6	--	1
RHC-C27	CORR 124	HF	OPEN	100	100	0.5	8.5	65	277/1/60	1.8	--	1
RHC-C28	ECP 125	HF	OPEN	100	100	0.5	8.5	65	277/1/60	1.8	--	1
RHC-C29	ECP 126	HF	OPEN	100	100	0.5	8.5	65	277/1/60	1.8	--	1
RHC-C30	SIGCEN 127	HF	OPEN	250	150	1.0	8.5	250	277/1/60	3.6	--	1
RHC-C31	SIGCEN NCOIC 128	HF	OPEN	250	150	1.0	8.5	265	277/1/60	3.6	--	1
RHC-C32	D.V. OFF 131	HF	OPEN	250	150	1.0	8.5	265	277/1/60	3.6	--	1
RHC-C33	COMMS 129	HF	OPEN	300	250	3.0	8.5	1050	277/1/60	10.8	--	1
RHC-C34	COMMS 129	HF	OPEN	300	250	3.0	8.5	1050	277/1/60	10.8	--	1
RHC-C35	COMMS 129	HF	OPEN	300	250	3.0	8.5	1050	277/1/60	10.8	--	1
RHC-C36	JWICS CONF 201	HF	OPEN	350	250	4.0	8.5	1200	277/1/60	14.4	--	1
RHC-C37	STRAT AWARENESS 202	HF	OPEN	300	250	3.0	8.5	830	277/1/60	10.8	--	1
RHC-C38	STRAT AWARENESS 202	HF	OPEN	300	250	3.0	8.5	830	277/1/60	10.8	--	1
RHC-C39	STRAT AWARENESS 202	HF	OPEN	300	250	3.0	8.5	830	277/1/60	10.8	--	1
RHC-C40	SAR 203	HF	OPEN	250	200	2.0	8.5	550	277/1/60	7.2	--	1
RHC-C41	HUMINT 204	HF	OPEN	350	250	4.0	8.5	1120	277/1/60	14.4	--	1
RHC-C42	3X SHOP 205	HF	OPEN	350	250	3.5	8.5	1020	277/1/60	12.6	--	1
RHC-C43	3X SHOP 205	HF	OPEN	350	250	3.5	8.5	1020	277/1/60	12.6	--	1
RHC-C44	3X OFFICE 206	HF	OPEN	250	150	1.5	8.5	275	277/1/60	5.4	--	1
RHC-C45	IMAGERY 207	HF	OPEN	250	150	2.0	8.5	550	277/1/60	7.2	--	1
RHC-C46	SITUATIONAL AWARENESS 208	HF	OPEN	350	200	3.0	8.5	800	277/1/60	10.8	--	1
RHC-C47	SITUATIONAL AWARENESS 208	HF	OPEN	350	200	3.0	8.5	800	277/1/60	10.8	--	1
RHC-C48	SITUATIONAL AWARENESS 208	HF	OPEN	350	200	3.0	8.5	800	277/1/60	10.8	--	1
RHC-C49	SITUATIONAL AWARENESS 208	HF	OPEN	350	200	3.0	8.5	800	277/1/60	10.8	--	1
RHC-C50	SITUATIONAL AWARENESS 208	HF	OPEN	350	200	3.0	8.5	800	277/1/60	10.8	--	1
RHC-C51	SITUATIONAL AWARENESS 208	HF	OPEN	350	200	3.0	8.5	800	277/1/60	10.8	--	1
RHC-C52	SITUATIONAL AWARENESS 208	HF	OPEN	350	200	3.0	8.5	800	277/1/60	10.8	--	1
RHC-C53	SITUATIONAL AWARENESS 208	HF	OPEN	350	200	3.0	8.5	800	277/1/60	10.8	--	1
RHC-C54	COMMS 209	HF	OPEN	300	150	2.0	8.5	530	277/1/60	7.2	--	1
RHC-C55	COMMS 209	HF	OPEN	300	150	2.0	8.5	530	277/1/60	7.2	--	1
RHC-C56	CONF 210	HF	OPEN	250	200	2.0	8.5	585	277/1/60	7.2	--	1
RHC-C57	CONF 210	HF	OPEN	250	200	2.0	8.5	585	277/1/60	7.2	--	1
RHC-C58	BREAK 213	HF	OPEN	150	100	0.5	8.5	95	277/1/60	1.8	--	1
RHC-C59	CORR 218	HF	OPEN	200	150	1.0	8.5	240	277/1/60	3.6	--	1
RHC-C60	CORR 219	HF	OPEN	150	100	0.5	8.5	180	277/1/60	1.8	--	1
RHC-C61	CORR 220	HF	OPEN	150	100	0.5	8.5	170	277/1/60	1.8	--	1
RHC-C62	ELEC. 221	HF	OPEN	150	100	0.5	8.5	160	277/1/60	1.8	--	1
RHC-C63	ECP 222	HF	OPEN	100	100	0.5	8.5	60	277/1/60	1.8	--	1
RHC-C64	ECP 223	HF	OPEN	100	100	0.5	8.5	60	277/1/60	1.8	--	1

NOTES:
1. DESIGN BASIS: MARKEL HF OPEN COIL HEATER

1 0 1 2 3 4 5 6 7 8 9
1:100

THESE DRAWINGS ARE "NOT APPROVED FOR CONSTRUCTION" SINCE THESE ARE BASED UPON ASSUMED CONDITIONS. THE CONTRACTOR SHALL NOT PROCEED WITH CONSTRUCTION UNTIL THE ASSUMED CONDITIONS ARE VALIDATED AND APPROVAL IS RECEIVED FROM THE CONTRACTING OFFICER.

STATE OF NEW YORK · KEVIN CHARLES KERN · 073082 · LICENSED PROFESSIONAL ENGINEER
2/6/2012

UNLESS OTHERWISE NOTED, LINEAR DIMENSIONS SHOWN ARE IN METERS.

DESIGN COMPLETE SUBMITTAL

SYMB	DESCRIPTION	DATE	
FNL	DESIGN COMPLETE SUBMITTAL	02-06-12	KCT APR

DESIGNED BY: SRZ
DRAWN BY: BNL
CHECKED BY: KCT
DATE: 02-06-2012
SUBMITTED BY: TETRA TECH
FILE NO.: AF1202A-M600SC

TETRA TECH

US Army Corps of Engineers
Middle East District

COMMAND & CONTROL FACILITY
KANDAHAR AIR FIELD, AFGHANISTAN
COMMAND & CONTROL FACILITY
MECHANICAL SCHEDULES

SHEET REFERENCE NUMBER:
A
M-600

W:\23308\127-23308-11004\CAD\MED Drawings\AF1202\AF1202A\Mechanical\AF1202A-M600SC.dwg 3/7/2012 9:48:03 AM Jeffers, Scott

SOUND ATTENUATION SCHEDULE - (SA)

DWG LABEL	UNIT LOCATION	MODEL NO.	WIDTH (DUCT) (mm)	HEIGTH (DUCT) (mm)	LENGTH (mm) STR	LENGTH (mm) EL	FLOW CAPACITY (M3/HR)	PRESSURE DROP mm WG	DYNAMIC INSERTION LOSS 63	125	250	500	1000	2000	4000	8000	NOTES
SA-C1	SOTF CDR 101	TLS/RFS	300	200	2150		840	0.011	13	26	42	52	55	53	51	45	1, 2
SA-C2	SOTF CDR 101	TLS/RFS	300	200	2150		840	0.011	13	26	42	52	55	53	51	45	1, 2
SA-C3	SOTF JAG 104	TLS/RFS	500	250	1535	615	1840	0.011	13	26	42	52	55	53	51	45	1, 2
SA-C4	SOTF JAG 104	TLS/RFS	250	200	1535	615	500	0.011	13	26	42	52	55	53	51	45	1, 2
SA-C5	ADJ RCP 105	TLS/RFS	250	200	940	1210	500	0.011	13	26	42	52	55	53	51	45	1, 2
SA-C6	ADJ RCP 105	TLS/RFS	500	250	2150		1840	0.011	13	26	42	52	55	53	51	45	1, 2
SA-C7	JVB 106	TLS/RFS	250	200	1490	660	485	0.011	13	26	42	52	55	53	51	45	1, 2
SA-C8	JVB 106	TLS/RFS	250	200	1535	615	485	0.011	13	26	42	52	55	53	51	45	1, 2
SA-C9	SOTF XO 102	TLS/RFS	250	200	1490	660	460	0.011	13	26	42	52	55	53	51	45	1, 2
SA-C10	SOTF XO 102	TLS/RFS	300	250	1535	615	945	0.011	13	26	42	52	55	53	51	45	1, 2
SA-C11	SOTF CSM 103	TLS/RFS	250	200	1490	660	460	0.011	13	26	42	52	55	53	51	45	1, 2
SA-C12	SOTF CSM 103	TLS/RFS	400	250	1535	615	1405	0.011	13	26	42	52	55	53	51	45	1, 2
SA-C13	SIG CEN 127/128	TLS/RFS	250	150	1840	310	265	0.011	13	26	42	52	55	53	51	45	QUANTITY 2 1, 2
SA-C14	SIG CEN 127/128	TLS/RFS	250	150	1225	925	265	0.011	13	26	42	52	55	53	51	45	QUANTITY 2 1, 2
SA-C15	COMMS 129	TLS/RFS	600	300	715	1630	3680	0.011	13	26	42	52	55	53	51	45	1, 2
SA-C16	COMMS 129	TLS/RFS	600	300	2150		3680	0.011	13	26	42	52	55	53	51	45	1, 2
SA-C17	J35 OFF 111	TLS/RFS	300	250	2150		920	0.011	13	26	42	52	55	53	51	45	1, 2
SA-C18	J35 OFF 111	TLS/RFS	300	250	1185	975	920	0.011	13	26	42	52	55	53	51	45	1, 2
SA-C19	ELEC 112	TLS/RFS	300	250	2150		870	0.011	13	26	42	52	55	53	51	45	1, 2
SA-C20	ELEC 112	TLS/RFS	300	250	2150		870	0.011	13	26	42	52	55	53	51	45	1, 2
SA-C21	FUTURE PLAN 116	TLS/RFS	700	450	2150		9845	0.011	13	26	42	52	55	53	51	45	1, 2
SA-C22	FUTURE PLAN 116	TLS/RFS	700	450	2150		9845	0.011	13	26	42	52	55	53	51	45	1, 2
SA-C23	FUTURE PLAN 116	TLS/RFS	700	450	2150		9845	0.011	13	26	42	52	55	53	51	45	1, 2, 3
SA-C24	FUTURE PLAN 116	TLS/RFS	700	450	2150		9845	0.011	13	26	42	52	55	53	51	45	1, 2, 3
SA-C25	FUTURE PLAN 116	TLS/RFS	850	550	1500	650	10565	0.011	13	26	42	52	55	53	51	45	1, 2, 3
SA-C26	FUTURE PLAN 116	TLS/RFS	850	550	1500	650	10565	0.011	13	26	42	52	55	53	51	45	1, 2, 3
SA-C27	FUTURE PLAN 116	TLS/RFS	600	550	720	1430	3945	0.011	13	26	42	52	55	53	51	45	1, 2
SA-C28	FUTURE PLAN 116	TLS/RFS	600	550	2150		3945	0.011	13	26	42	52	55	53	51	45	1, 2
SA-C29	FUTURE PLAN 116	TLS/RFS	200	150	2150		255	0.011	13	26	42	52	55	53	51	45	1, 2, 3
SA-C30	FUTURE PLAN 116	TLS/RFS	200	150	1075	1075	255	0.011	13	26	42	52	55	53	51	45	1, 2
SA-C31	FUTURE PLAN 116	TLS/RFS	150	100	1225	925	128	0.011	13	26	42	52	55	53	51	45	1, 2
SA-C32	FUTURE PLAN 116	TLS/RFS	150	100	1050	1100	128	0.011	13	26	42	52	55	53	51	45	1, 2, 3
SA-C33	TECH 119	TLS/RFS	150	100	2150		128	0.011	13	26	42	52	55	53	51	45	QUANTITY 2 1, 2, 3
SA-C34	LNO 114	TLS/RFS	350	250	2150		1400	0.011	13	26	42	52	55	53	51	45	1, 2
SA-C35	LNO 114	TLS/RFS	350	250	1225	925	1400	0.011	13	26	42	52	55	53	51	45	1, 2
SA-C36	DV OFF 131	TLS/RFS	250	150	1200	950	265	0.011	13	26	42	52	55	53	51	45	1, 2
SA-C37	DV OFF 131	TLS/RFS	250	150	950	1200	265	0.011	13	26	42	52	55	53	51	45	1, 2
SA-C38	S2 110	TLS/RFS	250	200	1750	400	500	0.011	13	26	42	52	55	53	51	45	1, 2
SA-C39	S2 110	TLS/RFS	250	200	1225	925	500	0.011	13	26	42	52	55	53	51	45	1, 2
SA-C40	OPCEN SGM 109	TLS/RFS	250	200	1750	400	500	0.011	13	26	42	52	55	53	51	45	1, 2
SA-C41	OPCEN SGM 109	TLS/RFS	250	200	925	1225	500	0.011	13	26	42	52	55	53	51	45	1, 2
SA-C42	OPCEN DIR 108	TLS/RFS	350	250	1750	400	500	0.011	13	26	42	52	55	53	51	45	1, 2
SA-C43	OPCEN DIR 108	TLS/RFS	350	250	2150		500	0.011	13	26	42	52	55	53	51	45	1, 2
SA-C44	CONF 210	TLS/RFS	1000	350	1750	400	1230	0.011	13	26	42	52	55	53	51	45	1, 2
SA-C45	CON 210	TLS/RFS	350	250	2150		1230	0.011	13	26	42	52	55	53	51	45	1, 2
SA-C46	SITUATIONAL AWARENESS 208	TLS/RFS	1000	350	2150		6960	0.011	13	26	42	52	55	53	51	45	1, 2
SA-C47	SITUATIONAL AWARENESS 208	TLS/RFS	1000	350	2150		6960	0.011	13	26	42	52	55	53	51	45	1, 2
SA-C48	JOC 107	TLS/RFS	1000	350	2150		6960	0.011	13	26	42	52	55	53	51	45	1, 2
SA-C49	SITUATIONAL AWARENESS 208	TLS/RFS	1000	350	2150		6960	0.011	13	26	42	52	55	53	51	45	1, 2
SA-C50	SITUATIONAL AWARENESS 208	TLS/RFS	1000	350	2150		6960	0.011	13	26	42	52	55	53	51	45	1, 2
SA-C51	JOC 107	TLS/RFS	1000	350	2150		6960	0.011	13	26	42	52	55	53	51	45	1, 2
SA-C52	SITUATIONAL AWARENESS 208	TLS/RFS	200	100	2150		180	0.011	13	26	42	52	55	53	51	45	1, 2
SA-C53	SITUATIONAL AWARENESS 208	TLS/RFS	200	100	2150		180	0.011	13	26	42	52	55	53	51	45	1, 2
SA-C54	CONF 210	TLS/RFS	100	100	1520	630	60	0.011	13	26	42	52	55	53	51	45	1, 2
SA-C55	CONF 210	TLS/RFS	100	100	1810	340	60	0.011	13	26	42	52	55	53	51	45	1, 2
SA-C56	SITUATIONAL AWARENESS 208	TLS/RFS	700	500	2150		7810	0.011	13	26	42	52	55	53	51	45	1, 2
SA-C57	SITUATIONAL AWARENESS 208	TLS/RFS	700	500	2150		7810	0.011	13	26	42	52	55	53	51	45	1, 2
SA-C58	JWICS CONF 201	TLS/RFS	100	100	2150		60	0.011	13	26	42	52	55	53	51	45	1, 2
SA-C59	JWICS CONF 201	TLS/RFS	100	100	2150		60	0.011	13	26	42	52	55	53	51	45	1, 2
SA-C60	JWICS CONF 201	TLS/RFS	350	250	2150		1260	0.011	13	26	42	52	55	53	51	45	1, 2
SA-C61	JWICS CONF 201	TLS/RFS	350	250	2150		1260	0.011	13	26	42	52	55	53	51	45	1, 2
SA-C62	STRAT AWARENESS 202	TLS/RFS	500	300	2150		2490	0.011	13	26	42	52	55	53	51	45	1, 2
SA-C63	STRAT AWARENESS 202	TLS/RFS	500	300	1450	700	2490	0.011	13	26	42	52	55	53	51	45	1, 2
SA-C64	WOMENS TOILET 217	TLS/RFS	250	200	2150		382	0.011	13	26	42	52	55	53	51	45	QUANTITY 2 1, 2
SA-C65	BREAK ROOM 213	TLS/RFS	150	100	1510	700	128	0.011	13	26	42	52	55	53	51	45	1, 2
SA-C66	BREAK ROOM 213	TLS/RFS	150	100	2150		255	0.011	13	26	42	52	55	53	51	45	1, 2
SA-C67	3X SHOP 205	TLS/RFS	450	300	925	1225	2040	0.011	13	26	42	52	55	53	51	45	1, 2
SA-C68	3X SHOP 205	TLS/RFS	600	350	1440	710	4265	0.011	13	26	42	52	55	53	51	45	1, 2
SA-C69	SAR 203/IMAGERY 207	TLS/RFS	250	200	650	1500	550	0.011	13	26	42	52	55	53	51	45	QUANTITY 2 1, 2
SA-C70	HUMINT 204	TLS/RFS	150	100	1790	360	160	0.011	13	26	42	52	55	53	51	45	1, 2
SA-C71	HUMINT 204	TLS/RFS	350	250	1475	675	1120	0.011	13	26	42	52	55	53	51	45	1, 2
SA-C72	COMMS 209	TLS/RFS	750	500	1410	740	8590	0.011	13	26	42	52	55	53	51	45	1, 2
SA-C73	COMMS 209	TLS/RFS	800	500	2150		9650	0.011	13	26	42	52	55	53	51	45	1, 2
SA-C74	COMMS 209	TLS/RFS	800	500	1205	945	9650	0.011	13	26	42	52	55	53	51	45	1, 2
SA-C75	HUMINT 204	TLS/RFS	800	500	2150		8590	0.011	13	26	42	52	55	53	51	45	1, 2
SA-C76	SAR 203	TLS/RFS	750	450	1790	360	7310	0.011	13	26	42	52	55	53	51	45	1, 2
SA-C77	IMAGERY 207	TLS/RFS	700	450	920	1230	6760	0.011	13	26	42	52	55	53	51	45	1, 2
SA-C78	3X OFFICE 206	TLS/RFS	700	450	2150		6760	0.011	13	26	42	52	55	53	51	45	1, 2
SA-C79	3X SHOP 205	TLS/RFS	700	450	2150		275	0.011	13	26	42	52	55	53	51	45	1, 2
SA-C80	3X OFFICE 206	TLS/RFS	250	150	1440	670	275	0.011	13	26	42	52	55	53	51	45	1, 2
SA-C81	3X OFFICE 206	TLS/RFS	250	150	2150		275	0.011	13	26	42	52	55	53	51	45	1, 2

NOTES:
1. DESIGN BASIS: IAC
2. DESIGN INSERTION LOSS SHOWN IS TYPICAL, PROVIDE SILENCER THAT MEETS OR EXCEEDS STC 45.
3. PROVIDE SECURITY BARS AT EXTERIOR WALL SEE DETAIL X/XXX.

1 0 1 2 3 4 5 6 7 8 9
1:100

THESE DRAWINGS ARE "NOT APPROVED FOR CONSTRUCTION" SINCE THESE ARE BASED UPON ASSUMED CONDITIONS. THE CONTRACTOR SHALL NOT PROCEED WITH CONSTRUCTION UNTIL THE ASSUMED CONDITIONS ARE VALIDATED AND APPROVAL IS RECEIVED FROM THE CONTRACTING OFFICER.

STATE OF NEW YORK · KEVIN CHARLES TERRY · 072583 · LICENSED PROFESSIONAL ENGINEER
2/6/2012

UNLESS OTHERWISE NOTED, LINEAR DIMENSIONS SHOWN ARE IN METERS.

DESIGN COMPLETE SUBMITTAL

SYMB	DESCRIPTION	DATE	
FNL	DESIGN COMPLETE SUBMITTAL	02-06-12	KCT APR

DESIGNED BY: SRZ
DATE: 02-06-2012
DRAWN BY: BNL
SUBMITTED BY: TETRA TECH
CHECKED BY: KCT
FILE NO.: AF1202A-M601SC

TETRA TECH

US Army Corps of Engineers
Middle East District

COMMAND & CONTROL FACILITY
KANDAHAR AIR FIELD, AFGHANISTAN
COMMAND & CONTROL FACILITY
MECHANICAL SCHEDULES

SHEET REFERENCE NUMBER:
A
M-601

W:\23308\127-23308-11004\CAD\MED Drawings\AF1202\AF1202A\Mechanical\AF1202A-M601SC.dwg 3/7/2012 9:48:28 AM Jeffers, Scott

FAN SCHEDULE - (EF)

DWG LABEL	SERVES	TYPE	MODEL NO.	M^3/HR (CFM)	FAN DATA							ELECTRICAL		NOTES
					SP mm WG (IN WG)	SONES	RPM	TS (FPM)	OPENING (SQ. IN)	DRIVE	BHP	HP	V/PH	
EF-C1	BREAK 117	IN-LINE EXHAUST	SQ-80-VG	255 (150)	13 (0.50)	6.8	1487	4233	11.88	DIRECT	0.05	1/4	110/1	1, 2, 3
EF-C2	J.C. 118	IN-LINE EXHAUST	SQ-70-L	128 (75)	6 (0.25)	2.4	1290	2744	8.88	DIRECT	0.01	1/25	110/1	1, 2, 3
EF-C3	TOILET 120	IN-LINE EXHAUST	SQ-70-L	128 (75)	6 (0.25)	2.4	1290	2744	8.88	DIRECT	0.01	1/25	110/1	1, 2, 3
EF-C4	TOILET 121	IN-LINE EXHAUST	SQ-70-L	128 (75)	6 (0.25)	2.4	1290	2744	8.88	DIRECT	0.01	1/25	110/1	1, 2, 3
EF-C5	BREAK 213	IN-LINE EXHAUST	SQ-80-VG	255 (150)	13 (0.50)	6.8	1487	4233	11.88	DIRECT	0.05	1/4	110/1	1, 2, 3
EF-C6	J.C. 215	IN-LINE EXHAUST	SQ-70-L	128 (75)	6 (0.25)	2.4	1290	2744	8.88	DIRECT	0.01	1/25	110/1	1, 2, 3
EF-C7	TOILET 216	IN-LINE EXHAUST	SQ-80-VG	385 (225)	13 (0.50)	7.6	1589	4525	11.88	DIRECT	0.06	1/4	110/1	1, 2, 3
EF-C8	TOILET 217	IN-LINE EXHAUST	SQ-80-VG	385 (225)	13 (0.50)	7.6	1589	4525	11.88	DIRECT	0.06	1/4	110/1	1, 2, 3

NOTES:
1. DESIGN BASIS: GREENHECK
2. UNITS ARE SUBJECT TO CHANGE AS DESIGN PROGRESSES
3. INTERLOCK FAN WITH ASSOCIATED DAMPER ACTUATOR.

DIFFUSER AND GRILLES SCHEDULE - (SA), (RA), (EA)

DWG LABEL	MODEL NO.	TYPE	LOCATION	SIZE	VOLUME FLOW (M3/HR)	PRESSURE DROP (MAX) (Pa)	NOISE CRITERIA	CONSTRUCTION CRITERIA	FINISH CRITERIA	NOTES
SA-1	1400	SUPPLY	SEE DWGS	SEE DWGS	SEE DWGS	19.9	<20	ALUMINUM	WHIITE	1
SA-2	880	SUPPLY	SEE DWGS	SEE DWGS	SEE DWGS	19.9	<20	STEEL	WHITE	1, 2
RA-1	EGC-15	RETURN	SEE DWGS	SEE DWGS	SEE DWGS	19.9	<20	ALUMINUM	WHITE	1
EA-1	S80	EXHAUST	SEE DWGS	SEE DWGS	SEE DWGS	19.9	<20	STEEL	WHITE	1, 2

NOTES:
1. DESIGN BASIS: KRUGER
2. PROVIDE STEEL PAINTED OPPOSED BLADE DAMPER (POBD).

LOUVER SCHEDULE - (L)

DWG LABEL	SERVES	MODEL NO.	TYPE	LENGTH (mm)	HEIGHT (mm)	DEPTH (mm)	FREE AREA (M2.)	M3/HR	VELOCITY (MPH)	NOTES
L-C1	EF-C1	FSL-401	EXHAUST	450	450	100	0.035	255	8230	1, 2, 3, 4, 5
L-C2	EF-C2	FSL-401	EXHAUST	450	300	100	0.017	128	8230	1, 2, 3, 4, 5
L-C3	EF-C3	FSL-401	EXHAUST	450	300	100	0.017	128	8230	1, 2, 3, 4, 5
L-C4	EF-C4	FSL-401	EXHAUST	450	300	100	0.017	128	8230	1, 2, 3, 4, 5
L-C5	EF-C5	FSL-401	EXHAUST	450	450	100	0.035	255	8230	1, 2, 3, 4, 5
L-C6	EF-C6	FSL-401	EXHAUST	450	300	100	0.017	128	8230	1, 2, 3, 4, 5
L-C7	EF-C7	FSL-401	EXHAUST	600	450	100	0.051	380	8230	1, 2, 3, 4, 5
L-C8	EF-C8	FSL-401	EXHAUST	600	450	100	0.051	380	8230	1, 2, 3, 4, 5

NOTES:
1. DESIGN BASIS: GREENHECK
2. PROVIDE WITH KYNAR FINISH.
3. PROVIDE WITH ALUMINUM BIRDSCREEN IN REMOVABLE FRAME.
4. DAMPER SHALL INCLUDE (ELECTRONIC) ACTUATOR FOR AUTOMATIC DAMPER.
5. COLOR TO BE SELECTED BY ARCHITECT.

REMOTE CONDENSING UNIT SCHEDULE - (RCU)

DWG LABEL	SERVES	MODEL NO.	REFRIG.	SUCTION SIZE (mm)	LIQUID SIZE (mm)	NOMINAL CAPACITY (KW)	OUTDOOR COMPRESSORS		ELECTRICAL				NOTES
							NO.	TYPE	EER	MCA	MOP	V/PH	
RCU-C1	AHU-C1	38APD040	R-410A	35	16	139	2	SCROLL	10.8	83.6	100	480/3/60	1, 2
RCU-C2	AHU-C2	38APD025	R-410A	28	16	87	2	SCROLL	11.0	48.5	60	480/3/60	1, 2
RCU-C3	AHU-C3	38APD030	R-410A	35	16	105	2	SCROLL	10.8	67.1	90	480/3/60	1, 2

NOTES:
1. DESIGN BASIS: CARRIER 38APD
2. COMPANION TO AHU AND PROVIDED AS PART OF INTEGRATED PACKAGE BY AHU MANUFACTURER.

1 0 1 2 3 4 5 6 7 8 9
1:100

THESE DRAWINGS ARE "NOT APPROVED FOR CONSTRUCTION" SINCE THESE ARE BASED UPON ASSUMED CONDITIONS. THE CONTRACTOR SHALL NOT PROCEED WITH CONSTRUCTION UNTIL THE ASSUMED CONDITIONS ARE VALIDATED AND APPROVAL IS RECEIVED FROM THE CONTRACTING OFFICER.

STATE OF NEW YORK · KEVIN CHARLES TERRY · 079083 · LICENSED PROFESSIONAL ENGINEER
2/6/2012

UNLESS OTHERWISE NOTED, LINEAR DIMENSIONS SHOWN ARE IN METERS.

DESIGN COMPLETE SUBMITTAL

SYMB	DESCRIPTION	DATE	APR
FNL	DESIGN COMPLETE SUBMITTAL	02-06-12	KCT

DESIGNED BY: SRZ
DRAWN BY: BNL
CHECKED BY: KCT
DATE: 02-06-2012
SUBMITTED BY: TETRA TECH
FILE NO.: AF1202A-M602SC

TETRA TECH

US Army Corps of Engineers
Middle East District

COMMAND & CONTROL FACILITY
KANDAHAR AIR FIELD, AFGHANISTAN
COMMAND & CONTROL FACILITY
MECHANICAL SCHEDULES

SHEET REFERENCE NUMBER:
A
M-602

W:\2330B\127-23308-11004\CAD\MED Drawings\AF1202\AF1202A\Mechanical\AF1202A-M602SC.dwg 3/7/2012 9:48:54 AM Jeffers, Scott

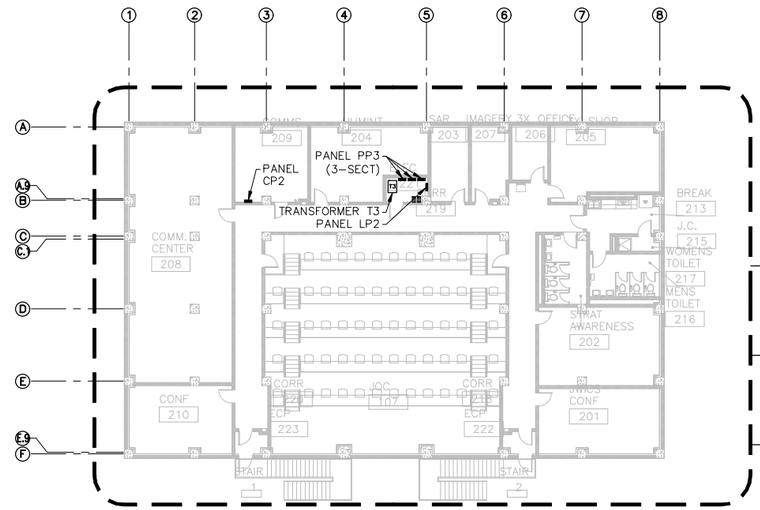

FIRST FLOOR PLAN (2 / E-110 | E-110)
SCALE 1:200

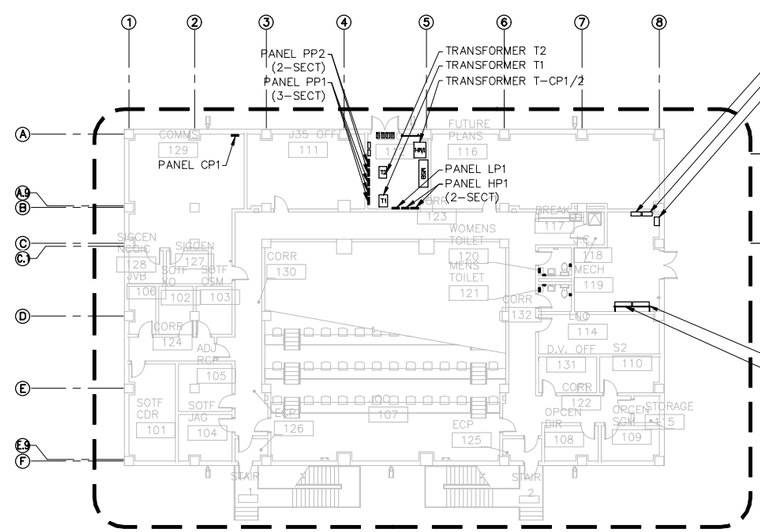

GROUND FLOOR PLAN (1 / E-110 | E-110)
SCALE 1:200

ROOF LIGHTNING PROTECTION PLAN (1 / E-110 | E-120)
LIGHTING PLAN (1 / E-110 | E-112)
POWER PLAN (1 / E-110 | E-114)
LIGHTING PLAN (1 / E-110 | E-111)
POWER PLAN (1 / E-110 | E-113)

5 0 5 10 15
1:200

THESE DRAWINGS ARE "NOT APPROVED FOR CONSTRUCTION" SINCE THESE ARE BASED UPON ASSUMED CONDITIONS. THE CONTRACTOR SHALL NOT PROCEED WITH CONSTRUCTION UNTIL THE ASSUMED CONDITIONS ARE VALIDATED AND APPROVAL IS RECEIVED FROM THE CONTRACTING OFFICER.

STATE OF NEW YORK · KEVIN CHARLES TERRY · 079092 · LICENSED PROFESSIONAL ENGINEER
2/6/2012

UNLESS OTHERWISE NOTED, LINEAR DIMENSIONS SHOWN ARE IN MILLIMETERS.

DESIGN COMPLETE SUBMITTAL

SYMB	DESCRIPTION	DATE	APR
FNL	DESIGN COMPLETE SUBMITTAL	02-06-12	KCT

DESIGNED BY: JAS
DATE: 02-06-2012
DRAWN BY: SES
SUBMITTED BY: TETRA TECH
CHECKED BY: RWR
FILE NO.: AF1202A-E110PN

TETRA TECH

US Army Corps of Engineers
Middle East District

COMMAND & CONTROL FACILITY
KANDAHAR AIR FIELD, AFGHANISTAN
COMMAND & CONTROL FACILITY
KEY PLAN

SHEET REFERENCE NUMBER:
A
E-110

W:\2308\127-23308-11004\CAD\MED Drawings\AF1202\AF1202A\Electrical\AF1202A-E110PN.dwg 3/7/2012 9:49:34 AM Jeffers, Scott

GENERAL NOTES:

1. PROVIDE A NONCONDUCTIVE (PVC) BREAK AT ALL CONDUIT PENETRATIONS OF WALLS.

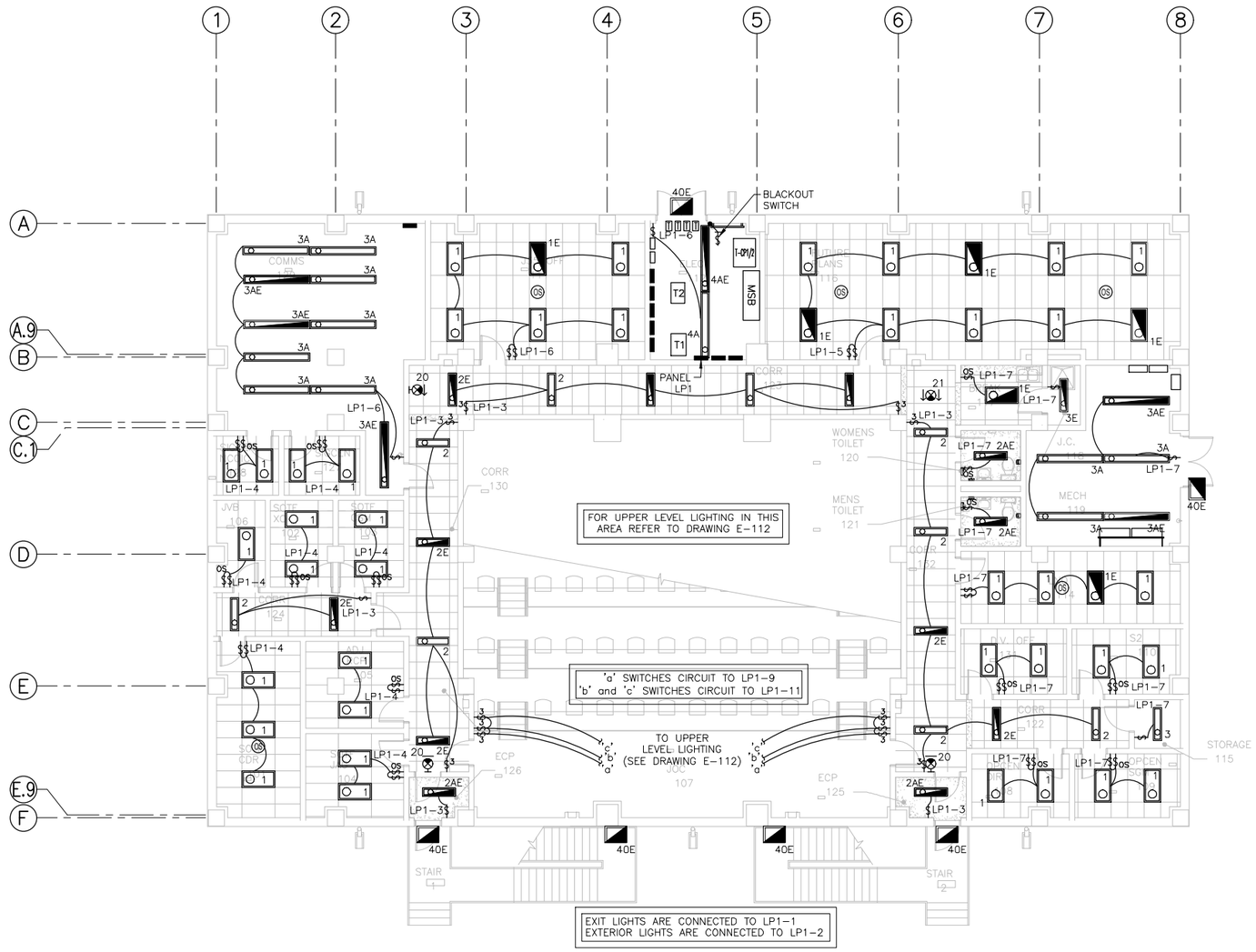

GROUND FLOOR LIGHTING PLAN

SCALE 1:100

1 E-110 | E-111

1:100

THESE DRAWINGS ARE "NOT APPROVED FOR CONSTRUCTION" SINCE THESE ARE BASED UPON ASSUMED CONDITIONS. THE CONTRACTOR SHALL NOT PROCEED WITH CONSTRUCTION UNTIL THE ASSUMED CONDITIONS ARE VALIDATED AND APPROVAL IS RECEIVED FROM THE CONTRACTING OFFICER.

STATE OF NEW YORK · KEVIN CHARLES TERRY · 073092 · LICENSED PROFESSIONAL ENGINEER

2/6/2012

UNLESS OTHERWISE NOTED, LINEAR DIMENSIONS SHOWN ARE IN MILLIMETERS.

DESIGN COMPLETE SUBMITTAL

FNL	DESIGN COMPLETE SUBMITTAL	02-06-12	KCT
SYMB	DESCRIPTION	DATE	APR

DESIGNED BY: JAS
DATE: 02-06-2012
DRAWN BY: SES
SUBMITTED BY: TETRA TECH
CHECKED BY: RWR
FILE NO.: AF1202A-E111PN

TETRA TECH

US Army Corps of Engineers
Middle East District

COMMAND & CONTROL FACILITY
KANDAHAR AIR FIELD, AFGHANISTAN
COMMAND & CONTROL FACILITY
GROUND FLOOR LIGHTING PLAN

SHEET REFERENCE NUMBER:
A
E-111

W:\23308\127-23308-11004\CAD\MED Drawings\AF1202\AF1202A\Electrical\AF1202A-E111PN.dwg 3/7/2012 9:50:05 AM Jeffers, Scott

GENERAL NOTES:

1. PROVIDE A NONCONDUCTIVE (PVC) BREAK AT ALL CONDUIT PENETRATIONS OF WALLS.

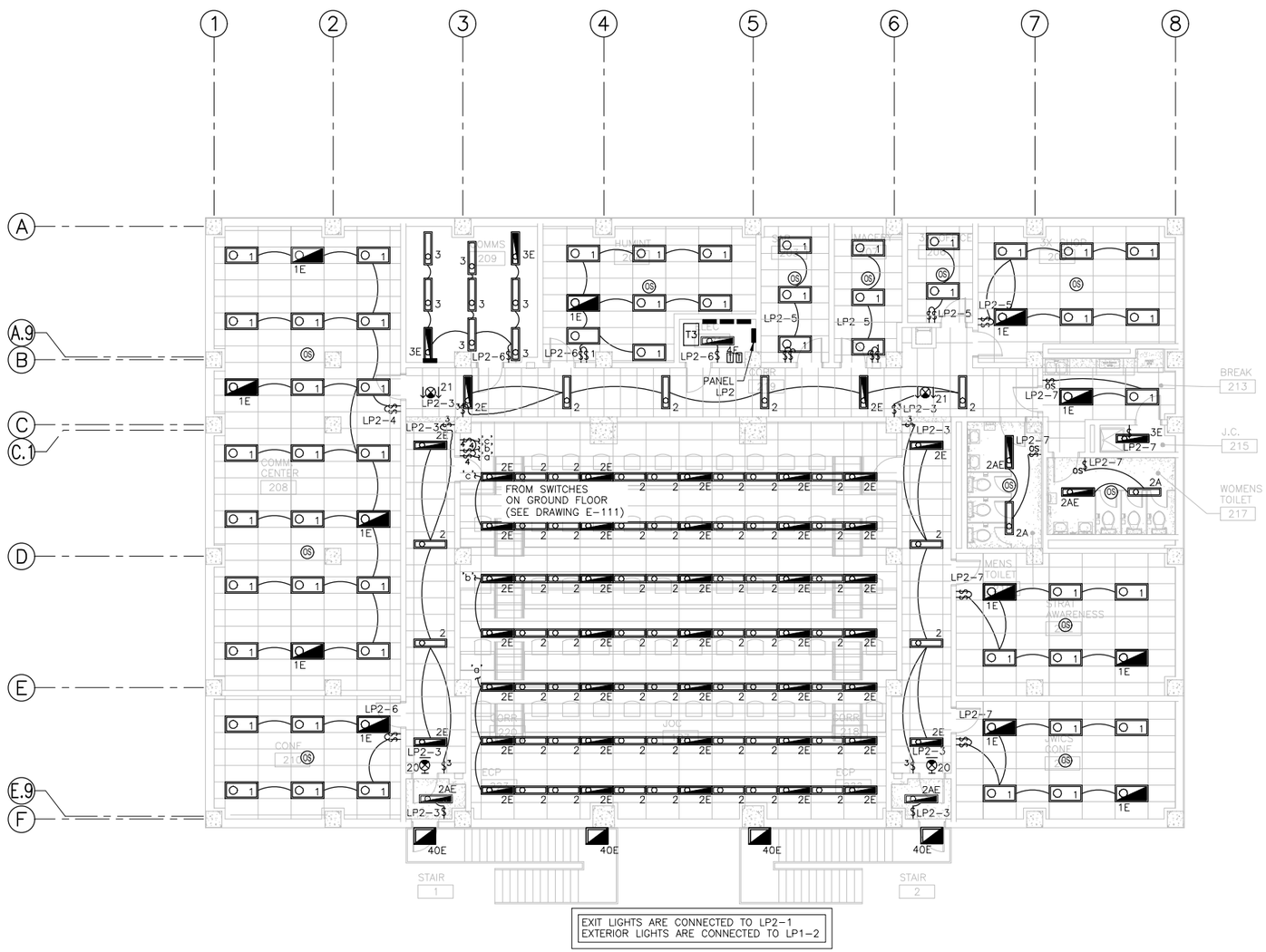

FIRST FLOOR LIGHTING PLAN

SCALE 1:100

1 / E-110 | E-112

1:100

THESE DRAWINGS ARE "NOT APPROVED FOR CONSTRUCTION" SINCE THESE ARE BASED UPON ASSUMED CONDITIONS. THE CONTRACTOR SHALL NOT PROCEED WITH CONSTRUCTION UNTIL THE ASSUMED CONDITIONS ARE VALIDATED AND APPROVAL IS RECEIVED FROM THE CONTRACTING OFFICER.

STATE OF NEW YORK · KEVIN CHARLES LEERY · 079082 · LICENSED PROFESSIONAL ENGINEER

2/6/2012

UNLESS OTHERWISE NOTED, LINEAR DIMENSIONS SHOWN ARE IN MILLIMETERS.

DESIGN COMPLETE SUBMITTAL

SYMB	DESCRIPTION	DATE	APR
FNL	DESIGN COMPLETE SUBMITTAL	02-06-12	KCT

DESIGNED BY: JAS
DATE: 02-06-2012
DRAWN BY: SES
SUBMITTED BY: TETRA TECH
CHECKED BY: RWR
FILE NO.: AF1202A-E112PN

TETRA TECH

US Army Corps of Engineers
Middle East District

COMMAND & CONTROL FACILITY
KANDAHAR AIR FIELD, AFGHANISTAN
COMMAND & CONTROL FACILITY
FIRST FLOOR LIGHTING PLAN

SHEET REFERENCE NUMBER:
A
E-112

W:\23308\127-23308-11004\CAD\WED Drawings\AF1202\AF1202A\Electrical\AF1202A-E112PN.dwg 3/7/2012 9:50:39 AM Jeffers, Scott

GENERAL NOTES:

1. PROVIDE A NONCONDUCTIVE (PVC) BREAK AT ALL CONDUIT PENETRATIONS OF WALLS.

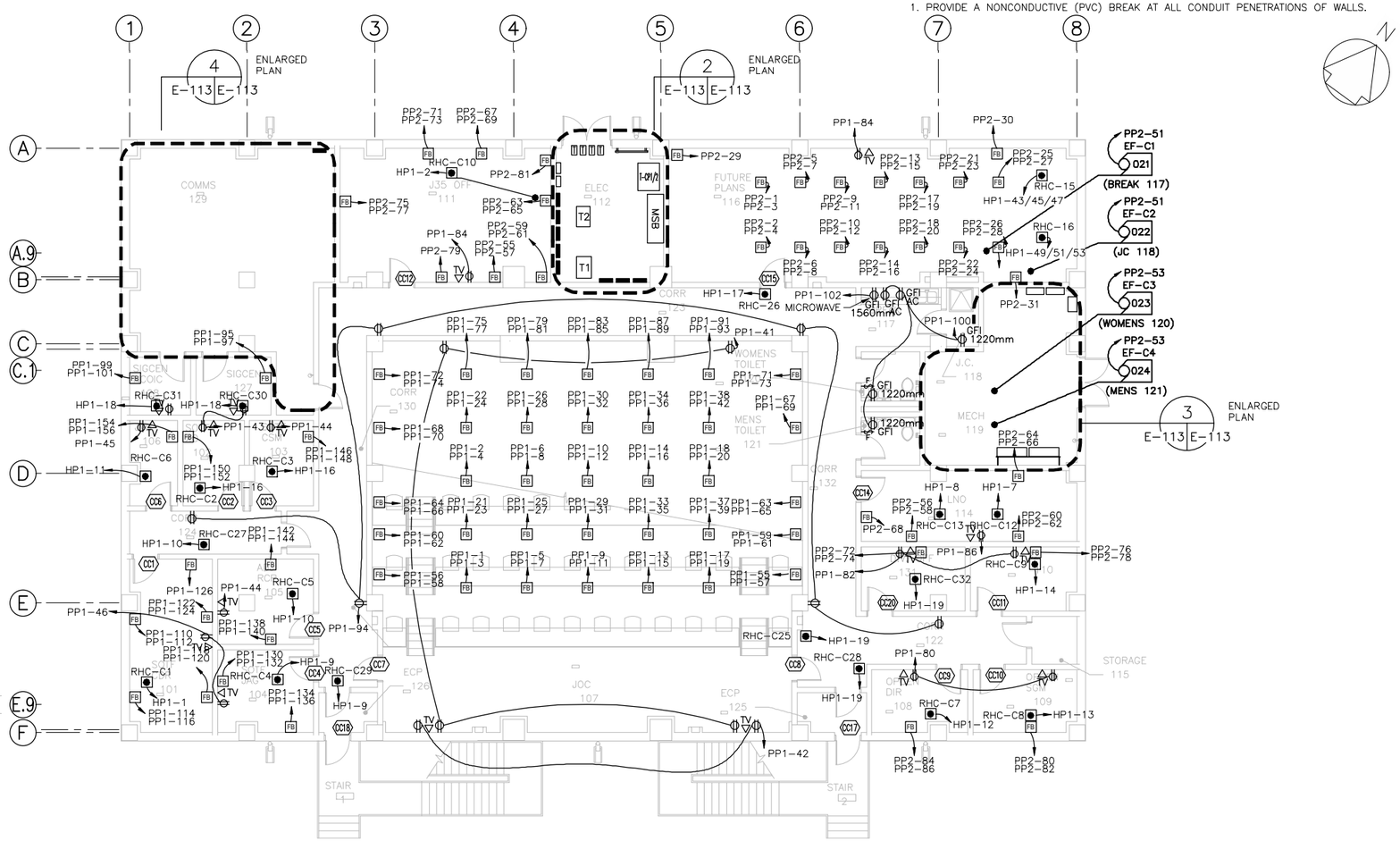

GROUND FLOOR POWER PLAN

SCALE 1:100 — 1 / E-110 E-113

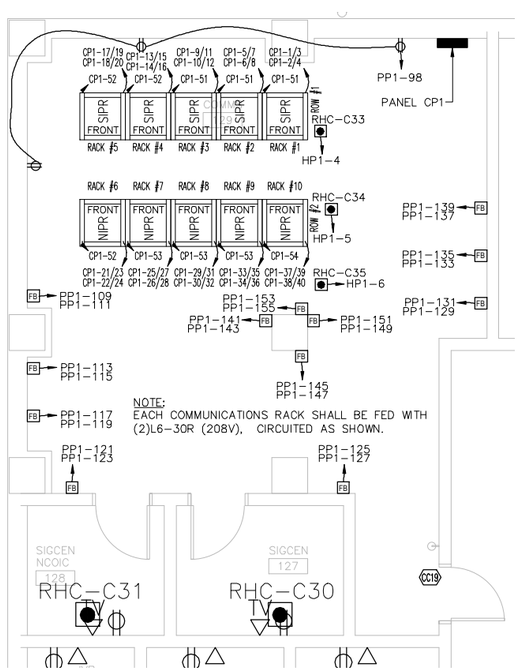

NOTE:
EACH COMMUNICATIONS RACK SHALL BE FED WITH (2)L6-30R (208V), CIRCUITED AS SHOWN.

ENLARGED PLAN – COMM ROOM 129

SCALE 1:50 — 4 / E-113 E-113

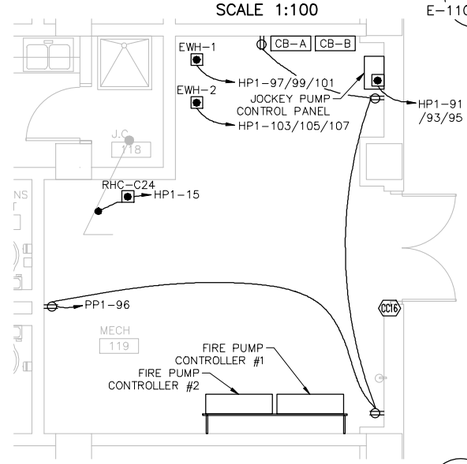

ENLARGED PLAN – MECH ROOM 119

SCALE 1:50 — 3 / E-113 E-113

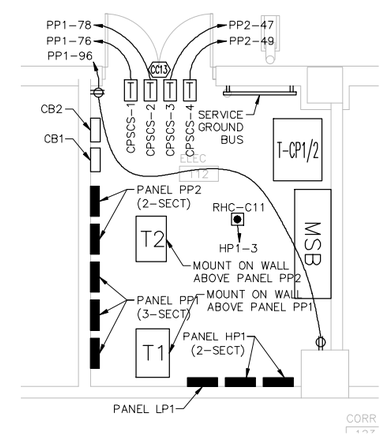

ENLARGED PLAN – ELEC ROOM 112

SCALE 1:50 — 2 / E-113 E-113

NOTE: REFER TO DRAWING C A-403 FOR ADDITIONAL INFORMATION REGARDING FLOOR BOX LOCATIONS

1:50 (1 0 1 2 3 4)

1:100 (1 0 1 2 3 4 5 6 7 8 9)

THESE DRAWINGS ARE "NOT APPROVED FOR CONSTRUCTION" SINCE THESE ARE BASED UPON ASSUMED CONDITIONS. THE CONTRACTOR SHALL NOT PROCEED WITH CONSTRUCTION UNTIL THE ASSUMED CONDITIONS ARE VALIDATED AND APPROVAL IS RECEIVED FROM THE CONTRACTING OFFICER.

STATE OF NEW YORK — KEVIN CHARLES TERRY — 073092 — LICENSED PROFESSIONAL ENGINEER

2/6/2012

UNLESS OTHERWISE NOTED, LINEAR DIMENSIONS SHOWN ARE IN MILLIMETERS.

DESIGN COMPLETE SUBMITTAL

FNL	DESIGN COMPLETE SUBMITTAL	02-06-12	KCT
SMB	DESCRIPTION	DATE	APR

DESIGNED BY: JAS
DATE: 02-06-2012
DRAWN BY: SES
SUBMITTED BY: TETRA TECH
CHECKED BY: RWR
FILE NO.: AF1202A-E113PN

TETRA TECH

US Army Corps of Engineers Middle East District

COMMAND & CONTROL FACILITY
KANDAHAR AIR FIELD, AFGHANISTAN
COMMAND & CONTROL FACILITY
GROUND FLOOR POWER PLAN

SHEET REFERENCE NUMBER:
A
E-113

W:\23308\127-23308-11004\CAD\MED Drawings\AF1202\AF1202A\Electrical\AF1202A-E113PN.dwg 3/7/2012 9:51:15 AM Jeffers, Scott

GENERAL NOTES:

1. PROVIDE A NONCONDUCTIVE (PVC) BREAK AT ALL CONDUIT PENETRATIONS OF WALLS.

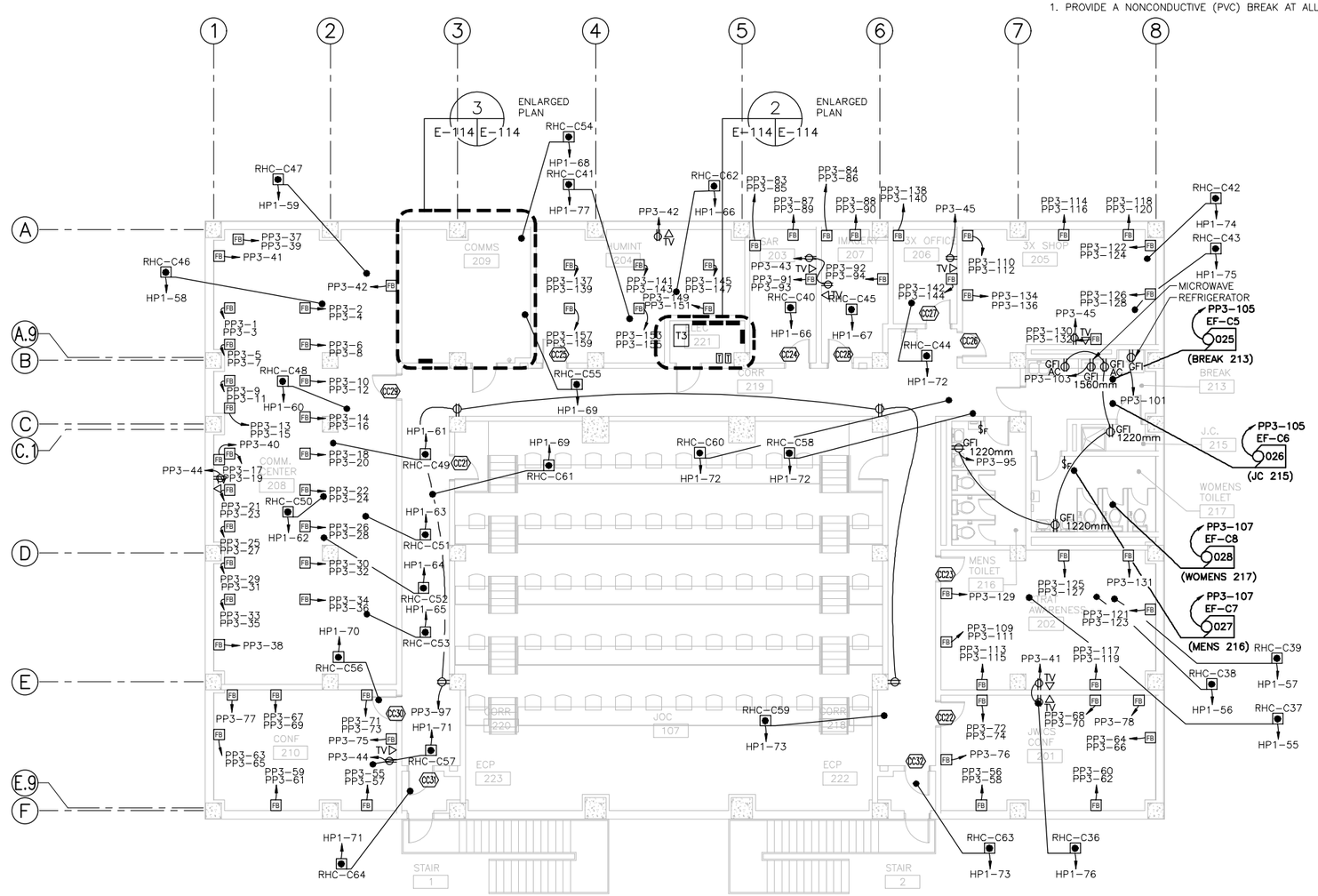

FIRST FLOOR POWER PLAN

SCALE 1:100

E-110 | 1 | E-114

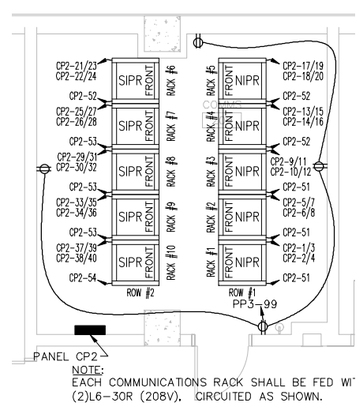

ENLARGED PLAN – COMM ROOM 209

SCALE 1:50

3 | E-114 | E-114

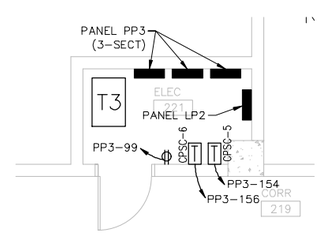

ENLARGED PLAN – ELEC ROOM 221

SCALE 1:50

2 | E-114 | E-114

NOTE: REFER TO DRAWING C A-403 FOR ADDITIONAL INFORMATION REGARDING FLOOR BOX LOCATIONS

1:50 — 1 0 1 2 3 4

1:100 — 1 0 1 2 3 4 5 6 7 8 9

THESE DRAWINGS ARE "NOT APPROVED FOR CONSTRUCTION" SINCE THESE ARE BASED UPON ASSUMED CONDITIONS. THE CONTRACTOR SHALL NOT PROCEED WITH CONSTRUCTION UNTIL THE ASSUMED CONDITIONS ARE VALIDATED AND APPROVAL IS RECEIVED FROM THE CONTRACTING OFFICER.

STATE OF NEW YORK — KEVIN CHARLES TERRY — LICENSED PROFESSIONAL ENGINEER — 075093

2/6/2012

UNLESS OTHERWISE NOTED, LINEAR DIMENSIONS SHOWN ARE IN MILLIMETERS.

DESIGN COMPLETE SUBMITTAL

FNL	DESCRIPTION	DATE	
SMB	DESIGN COMPLETE SUBMITTAL	02-06-12	KCT
			APR

DESIGNED BY: JAS
DATE: 02-06-2012
DRAWN BY: SES
SUBMITTED BY: TETRA TECH
CHECKED BY: RWR
FILE NO.: AF1202A-E114PN

TETRA TECH

US Army Corps of Engineers Middle East District

COMMAND & CONTROL FACILITY
KANDAHAR AIR FIELD, AFGHANISTAN
COMMAND & CONTROL FACILITY
FIRST FLOOR POWER PLAN

SHEET REFERENCE NUMBER:
A
E-114

W:\23308\127-23308-11004\CAD\MED Drawings\AF1202\AF1202A\Electrical\AF1202A-E114PN.dwg 3/7/2012 9:51:51 AM Jeffers, Scott

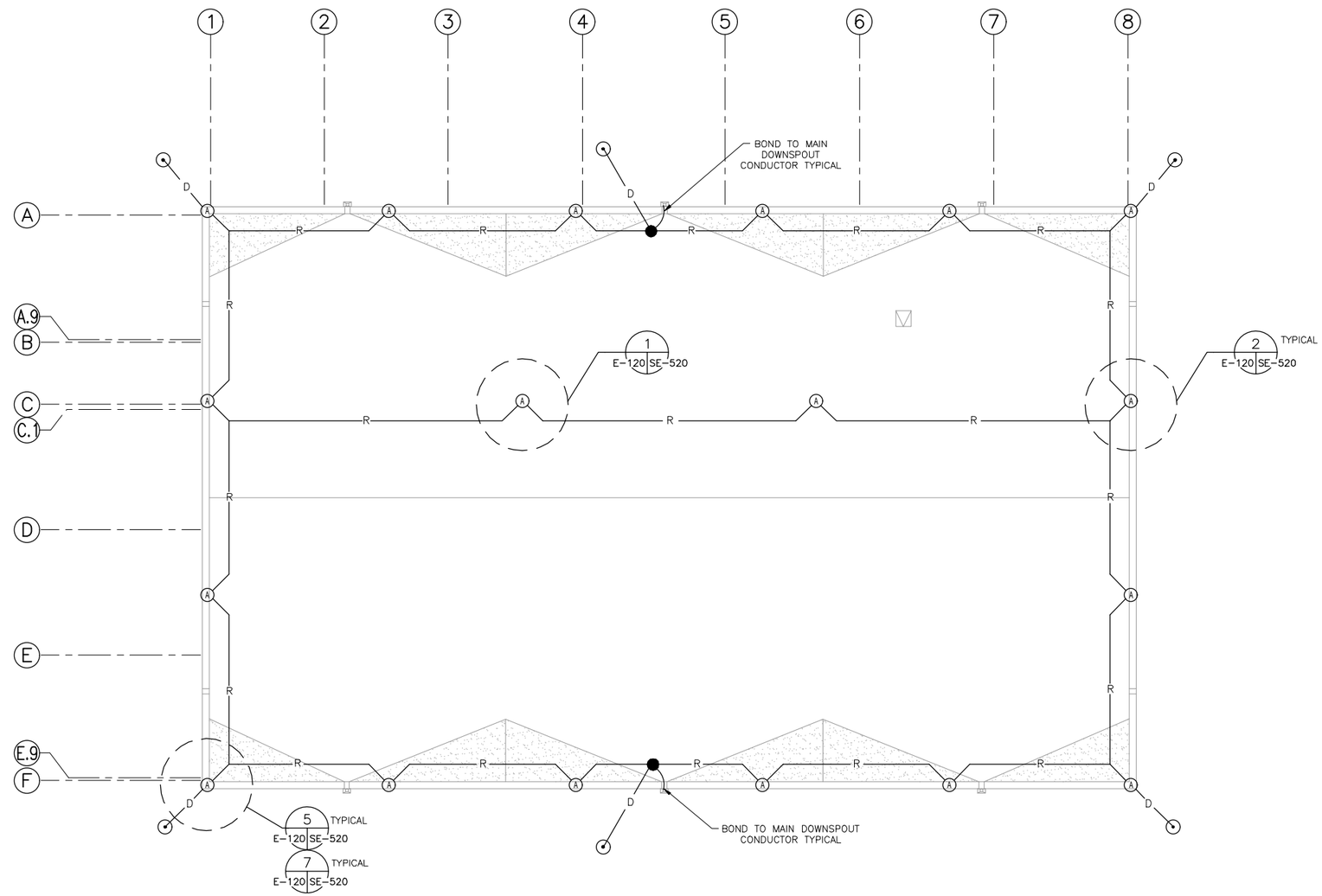

ROOF LIGHTNING PROTECTION PLAN (1 / E-110 | E-120)

SCALE 1:100

1:100

THESE DRAWINGS ARE "NOT APPROVED FOR CONSTRUCTION" SINCE THESE ARE BASED UPON ASSUMED CONDITIONS. THE CONTRACTOR SHALL NOT PROCEED WITH CONSTRUCTION UNTIL THE ASSUMED CONDITIONS ARE VALIDATED AND APPROVAL IS RECEIVED FROM THE CONTRACTING OFFICER.

STATE OF NEW YORK · KEVIN CHARLES TERRY · 073082 · LICENSED PROFESSIONAL ENGINEER

2/6/2012

UNLESS OTHERWISE NOTED, LINEAR DIMENSIONS SHOWN ARE IN MILLIMETERS.

DESIGN COMPLETE SUBMITTAL

SYMB	DESCRIPTION	DATE	APR
FNL	DESIGN COMPLETE SUBMITTAL	02-06-12	KCT

DESIGNED BY: EAN
DRAWN BY: SES
CHECKED BY: DJS
DATE: 02-06-2012
SUBMITTED BY: TETRA TECH
FILE NO.: AF1202A-E120PN

TETRA TECH

US Army Corps of Engineers
Middle East District

COMMAND & CONTROL FACILITY
KANDAHAR AIR FIELD, AFGHANISTAN
COMMAND & CONTROL FACILITY
ROOF LIGHTNING PROTECTION PLAN

SHEET REFERENCE NUMBER:
A
E-120

W:\23308\127-23308-11004\CAD\MED Drawings\AF1202\AF1202A\Electrical\AF1202A-E120PN.dwg 3/7/2012 9:52:27 AM Jeffers, Scott

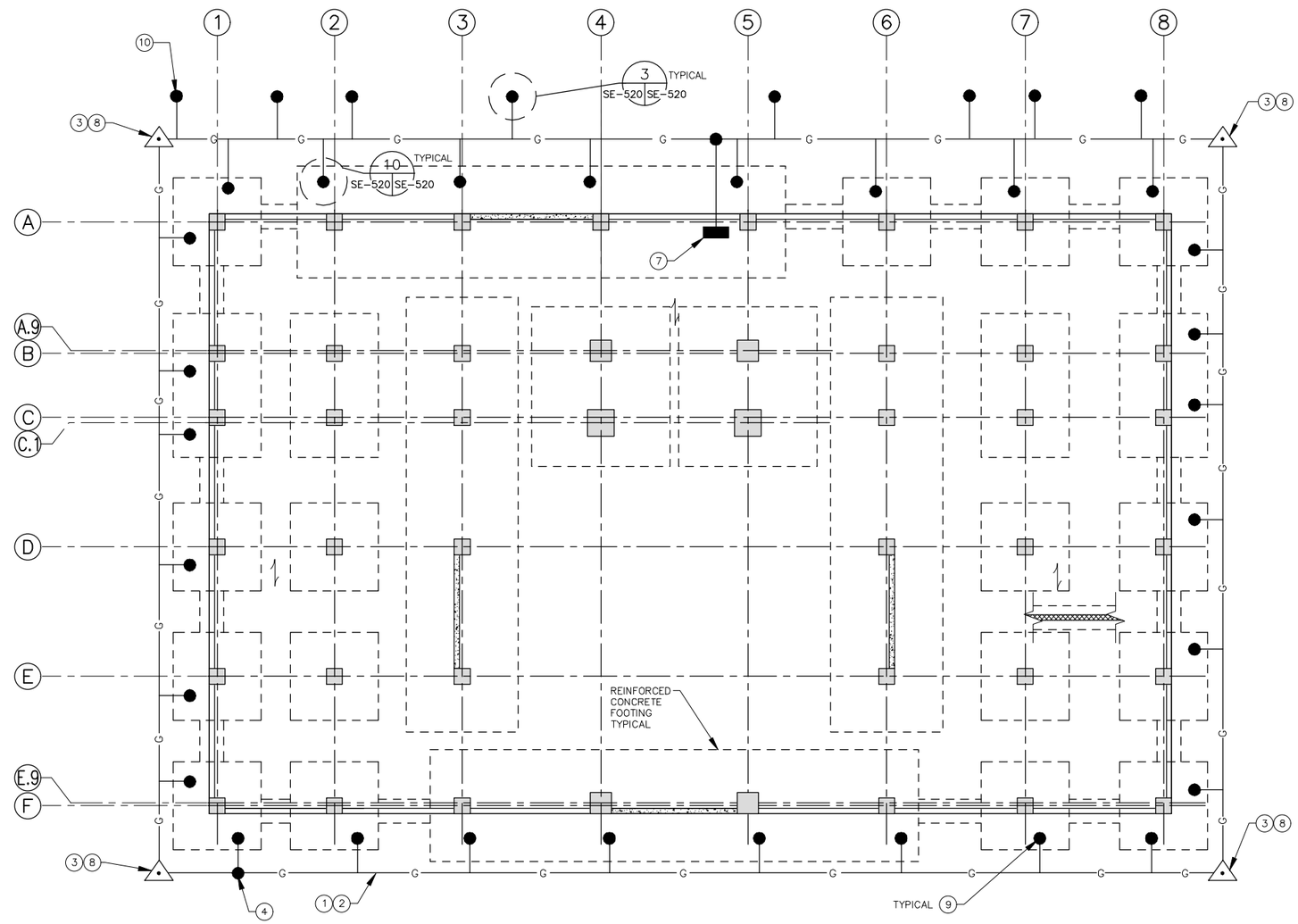

GROUNDING PLAN

SCALE 1:100 (1 / E-110 | E-130)

Keyed Notes:

1. GROUND RING MINIMUM DISTANCE FROM BUILDING IS 1524mm (60").
2. GROUND RING CONDUCTOR: ONE 50mm² BSC BELOW GRADE, TYPICAL. U.N.O.
3. GROUND ROD CONCEALED BELOW GRADE.
4. NON-REVERSIBLE BOND CONNECTION, TYPICAL FOR ALL CONNECTIONS.
5. BOND AHU & FRAMES TO GROUND RING CONDUCTOR – TYPICAL SEE DETAIL 3 ON DRAWING SE520.
6. PROVIDE GROUND ELECTRODE SYSTEM BOND TO FIRE SUPPRESSION PIPE IF METALLIC.
7. PROVIDE 50mm² BSC CONDUCTOR CONNECTION FROM GROUND RING TO BUILDING SYSTEM GROUND BUSBAR.
8. PROVIDE GROUND WELL (ONE AT EACH CORNER SHOWN) SIMILAR TO DETAIL 8 ON DRAWING SE-520.
9. ONE 50mm² COPPER LEAD CONNECTED TO BUILDING FOUNDATION STEEL REINFORCING BARS – TYPICAL SEE DETAIL 10 ON DRAWING SE520.

1 0 1 2 3 4 5 6 7 8 9
1:100

THESE DRAWINGS ARE "NOT APPROVED FOR CONSTRUCTION" SINCE THESE ARE BASED UPON ASSUMED CONDITIONS. THE CONTRACTOR SHALL NOT PROCEED WITH CONSTRUCTION UNTIL THE ASSUMED CONDITIONS ARE VALIDATED AND APPROVAL IS RECEIVED FROM THE CONTRACTING OFFICER.

STATE OF NEW YORK · KEVIN CHARLES TERRY · 073092 · LICENSED PROFESSIONAL ENGINEER

2/6/2012

UNLESS OTHERWISE NOTED, LINEAR DIMENSIONS SHOWN ARE IN METERS.

DESIGN COMPLETE SUBMITTAL

SYMB	DESCRIPTION	DATE	
FNL	DESIGN COMPLETE SUBMITTAL	02-06-12	KCT

DESIGNED BY: JAS
DATE: 02-06-2012
DRAWN BY: SES
SUBMITTED BY: TETRA TECH
CHECKED BY: RWR
FILE NO.: AF1202A-E130PN

TETRA TECH

US Army Corps of Engineers
Middle East District

COMMAND & CONTROL FACILITY
KANDAHAR AIR FIELD, AFGHANISTAN
COMMAND & CONTROL FACILITY
GROUNDING PLAN

SHEET REFERENCE NUMBER:
A
E-130

W:\23308\127-23308-11004\CAD\MED Drawings\AF1202\AF1202A\Electrical\AF1202A-E130PN.dwg 3/7/2012 9:52:58 AM Jeffers, Scott

MOTOR CONNECTION SCHEDULE

MTR	DESC.	HP	CKT	LOCATION	VOLT	WIRE SIZE	STARTER					DISCONNECT				CB	ADDITIONAL NOTES/REQUIREMENTS
							TYPE	BY	LOC	NEMA	AUX	BY	LOC	NEMA	SIZE		
001	AHU-C1	(2)15&(2)5	MSB	EXTERIOR	480V3PH	(3)#95mm², (1)#16mm²G, 64mm C.	–	--	--	--	--	--	--	--	--	–	SERVES GROUND FLOOR
002	AHU-C2	(2)5&(2)1.5	MSB	EXTERIOR	480V3PH	(3)#50mm², (1)#10mm²G, 38mm C.	–	--	--	--	--	--	--	--	--	–	SERVES 107
003	AHU-C3	(2)15&(2)5	MSB	EXTERIOR	480V3PH	(3)#70mm², (1)#16mm²G, 50mm C.	–	--	--	--	--	--	--	--	--	–	SERVES FIRST FLOOR
011	RCU-C1	–	–	EXTERIOR	–		–	MFR.	UNIT	--	--	EC	UNIT	3R	--	–	SERVES AHU-C1
012	RCU-C2	–	–	EXTERIOR	–	–	–	MFR.	UNIT	--	--	EC	UNIT	3R	--	–	SERVES AHU-C2
013	RCU-C3	–	–	EXTERIOR	–	–	–	MFR.	UNIT	--	--	EC	UNIT	3R	--	–	SERVES AHU-C3
						–											
021	EF-C1	1/4	PP2-81	BREAK ROOM 117	120V1PH	(2)#4mm², (1)#4mm²G, 16mm C.	–	--	--	--	--	--	--	--	--	15A1P	–
022	EF-C2	1/25	PP2-81	JANITOR'S CLOSET 118	120V1PH	(2)#4mm², (1)#4mm²G, 16mm C.	–	--	--	--	--	--	--	--	--	15A1P	–
023	EF-C3	1/25	PP2-83	TOILET – WOMENS 120	120V1PH	(2)#4mm², (1)#4mm²G, 16mm C.	–	--	--	--	--	--	--	--	--	15A1P	–
024	EF-C4	1/25	PP2-83	TOILET – MENS 121	120V1PH	(2)#4mm², (1)#4mm²G, 16mm C.	–	--	--	--	--	--	--	--	--	15A1P	–
025	EF-C5	1/4	PP3-105	BREAK ROOM 213	120V1PH	(2)#4mm², (1)#4mm²G, 16mm C.	–	--	--	--	--	--	--	--	--	15A1P	–
026	EF-C6	1/25	PP3-105	JANITOR'S CLOSET 215	120V1PH	(2)#4mm², (1)#4mm²G, 16mm C.	–	--	--	--	--	--	--	--	--	15A1P	–
027	EF-C7	1/4	PP3-107	TOILET – MENS 216	120V1PH	(2)#4mm², (1)#4mm²G, 16mm C.	–	--	--	--	--	--	--	--	--	15A1P	–
028	EF-C8	1/4	PP3-107	TOILET – WOMENS 217	120V1PH	(2)#4mm², (1)#4mm²G, 16mm C.	–	--	--	--	--	--	--	--	--	15A1P	–
030	JOCKEY PUMP	1.5	HP1-91,93,95	MECH ROOM 119	408V3PH	(3)#4mm², (1)#4mm²G, 16mm C.	–	--	--	--	--	--	--	--	--	15A3P	JOCKEY PUMP CONTROLLER
031	FP-1	25	XFMR	MECH ROOM 119	408V3PH	REFER TO FEEDER SCHEDULE	–	--	--	--	--	--	--	--	--	200A3P	FIRE PUMP CONTROLLER #1
			STBY GEN	MECH ROOM 119	408V3PH	REFER TO FEEDER SCHEDULE	–	--	--	--	--	--	--	--	--	80A3P	FIRE PUMP CONTROLLER #1
031	FP-1	25	XFMR	MECH ROOM 119	408V3PH	REFER TO FEEDER SCHEDULE	–	--	--	--	--	--	--	--	--	200A3P	FIRE PUMP CONTROLLER #2
			STBY GEN	MECH ROOM 119	408V3PH	REFER TO FEEDER SCHEDULE	–	--	--	--	--	--	--	--	--	80A3P	FIRE PUMP CONTROLLER #2

NOTES:
1 –EC TO MAKE CONNECTION TO MOTOR.
2 –EC TO INSTALL MOTOR STARTER FURNISHED BY OTHERS.
3 –EC TO MAKE CONNECTIONS TO CONTROLS.
4 –FIELD CONTROL WIRING BY OTHERS
5 –EC TO RUN FEED THRU CONTACTOR. CONTROL FROM FAN SHUTDOWN RELAY.
6 –EC TO FURNISH DUCT SMOKE DETECTORS TO HC FOR MOUNTING.
7 –EC TO PROVIDE G.F.I OUTLET AT UNIT. CIRCUIT TO NEAREST 120V CIRCUIT.
8 –EC TO WIRE THRU T-STAT THEN TO MOTOR.
9 –EC TO PROVIDE 120V OUTLET ABOVE CEILING AND CIRCUIT TO UNIT.

A – START-STOP IN COVER.
B – HAND-OFF-AUTO IN COVER.
C – PILOT LIGHT IN COVER.
D – AUXILIARY CONTACTS.
E – CONTROL CIRCUIT TRANSFORMER.
F – TWO SPEED MOTOR CONTROL.
G – KEY OPERATED – UP/DOWN OR OPEN/CLOSE.
H – REFER TO ACU/RCU WIRING DIAGRAM DETAIL ON DRAWING E2-900

THESE DRAWINGS ARE "NOT APPROVED FOR CONSTRUCTION" SINCE THESE ARE BASED UPON ASSUMED CONDITIONS. THE CONTRACTOR SHALL NOT PROCEED WITH CONSTRUCTION UNTIL THE ASSUMED CONDITIONS ARE VALIDATED AND APPROVAL IS RECEIVED FROM THE CONTRACTING OFFICER.

STATE OF NEW YORK · KEVIN CHARLES TERRY · 073092 · LICENSED PROFESSIONAL ENGINEER

2/6/2012

UNLESS OTHERWISE NOTED, LINEAR DIMENSIONS SHOWN ARE IN MILLIMETERS.

DESIGN COMPLETE SUBMITTAL

SYMB	DESCRIPTION	DATE	APR
FNL	DESIGN COMPLETE SUBMITTAL	02-06-12	KCT

DESIGNED BY: JAS
DATE: 02-06-2012
DRAWN BY: SES
SUBMITTED BY: TETRA TECH
CHECKED BY: RWR
FILE NO.: AF1202A-E601SC

TETRA TECH

US Army Corps of Engineers
Middle East District

COMMAND & CONTROL FACILITY
KANDAHAR AIR FIELD, AFGHANISTAN
COMMAND & CONTROL FACILITY
MOTOR CONNECTION SCHEDULE

SHEET REFERENCE NUMBER:
A
E-601

W:\23308\127-23308-11004\CAD\MED Drawings\AF1202\AF1202A\Electrical\AF1202A-E601SC.dwg 3/7/2012 9:53:17 AM Jeffers, Scott

EQUIPMENT CONNECTION SCHEDULE

MTR	DESC.	KW	CKT	LOCATION	AHU	VOLT	WIRE SIZE	DISCONNECT BY	DISCONNECT LOC	DISCONNECT NEMA	DISCONNECT SIZE	CB	ADDITIONAL NOTES/REQUIREMENTS
101	RHC-C1	3	HP1-1	SOTF CDR 101	AHU-C1	277V1PH	(2)#4mm², (1)#4mm²G, 16mm C.	--	--	--	--	-	-
102	RHC-C2	1.5	HP1-16	SOFT XO 102	AHU-C1	277V1PH	(2)#4mm², (1)#4mm²G, 16mm C.						
103	RHC-C3	1.5	HP1-16	SOFT CSM 103	AHU-C1	277V1PH	(2)#4mm², (1)#4mm²G, 16mm C.						
104	RHC-C4	2	HP1-9	SOFT JAG 104	AHU-C1	277V1PH	(2)#4mm², (1)#4mm²G, 16mm C.						
105	RHC-C5	2	HP1-10	ADJ RCP 105	AHU-C1	277V1PH	(2)#4mm², (1)#4mm²G, 16mm C.						
106	RHC-C6	2	HP1-11	JVB 106	AHU-C1	277V1PH	(2)#4mm², (1)#4mm²G, 16mm C.						
107	RHC-C7	2	HP1-12	OPCEN DIR 108	AHU-C1	277V1PH	(2)#4mm², (1)#4mm²G, 16mm C.						
108	RHC-C8	2	HP1-13	OPCEN SGM 109	AHU-C1	277V1PH	(2)#4mm², (1)#4mm²G, 16mm C.						
109	RHC-C9	2	HP1-14	S2 110	AHU-C1	277V1PH	(2)#4mm², (1)#4mm²G, 16mm C.						
110	RHC-C10	3	HP1-2	J35 OFF 111	AHU-C1	277V1PH	(2)#4mm², (1)#4mm²G, 16mm C.						
111	RHC-C11	3	HP1-3	ELEC ROOM 112	AHU-C1	277V1PH	(2)#4mm², (1)#4mm²G, 16mm C.						
112	RHC-C12	2.5	HP1-7	LNO 114	AHU-C1	277V1PH	(2)#4mm², (1)#4mm²G, 16mm C.						
113	RHC-C13	2.5	HP1-8	↓	AHU-C1	277V1PH	(2)#4mm², (1)#4mm²G, 16mm C.						
114	RHC-C14	-	-	NOT USED	AHU-C1	277V1PH	(2)#4mm², (1)#4mm²G, 16mm C.						
115	RHC-C15	12	HP1-43/45/47	FUTURE PLANS 116	AHU-C1	277V1PH	(2)#4mm², (1)#4mm²G, 16mm C.						
116	RHC-C16	12	HP1-49/51/53	↓	AHU-C1	277V1PH	(2)#4mm², (1)#4mm²G, 16mm C.						
117	RHC-C17	-	-	NOT USED	AHU-C1	277V1PH	(2)#4mm², (1)#4mm²G, 16mm C.						
118	RHC-C18	-	-		AHU-C1	277V1PH	(2)#4mm², (1)#4mm²G, 16mm C.						
119	RHC-C19	-	-		AHU-C1	277V1PH	(2)#4mm², (1)#4mm²G, 16mm C.						
120	RHC-C20	-	-		AHU-C1	277V1PH	(2)#4mm², (1)#4mm²G, 16mm C.						
121	RHC-C21	-	-		AHU-C1	277V1PH	(2)#4mm², (1)#4mm²G, 16mm C.						
122	RHC-C22	-	-		AHU-C1	277V1PH	(2)#4mm², (1)#4mm²G, 16mm C.						
123	RHC-C23	-	-	↓	AHU-C1	277V1PH	(2)#4mm², (1)#4mm²G, 16mm C.						
124	RHC-C24	2	HP1-15	MECH ROOM 119	AHU-C1	277V1PH	(2)#4mm², (1)#4mm²G, 16mm C.						
125	RHC-C25	0.5	HP1-19	CORRIDOR 122	AHU-C1	277V1PH	(2)#4mm², (1)#4mm²G, 16mm C.						
126	RHC-C26	1	HP1-17	CORRIDOR 123	AHU-C1	277V1PH	(2)#4mm², (1)#4mm²G, 16mm C.						
127	RHC-C27	0.5	HP1-	CORRIDOR 124	AHU-C1	277V1PH	(2)#4mm², (1)#4mm²G, 16mm C.						
128	RHC-C28	0.5	HP1-19	ECP 125	AHU-C1	277V1PH	(2)#4mm², (1)#4mm²G, 16mm C.						
129	RHC-C29	0.5	HP1-	ECP 126	AHU-C1	277V1PH	(2)#4mm², (1)#4mm²G, 16mm C.						
130	RHC-C30	1	HP1-18	SIGCEN 127	AHU-C1	277V1PH	(2)#4mm², (1)#4mm²G, 16mm C.						
131	RHC-C31	1	HP1-18	SIGCEN NCOIC 128	AHU-C1	277V1PH	(2)#4mm², (1)#4mm²G, 16mm C.						
132	RHC-C32	1	HP1-19	D.V. OFFICE 131	AHU-C1	277V1PH	(2)#4mm², (1)#4mm²G, 16mm C.						
133	RHC-C33	3	HP1-4	COMMS 129	AHU-C1	277V1PH	(2)#4mm², (1)#4mm²G, 16mm C.						
134	RHC-C34	3	HP1-5		AHU-C1	277V1PH	(2)#4mm², (1)#4mm²G, 16mm C.						
135	RHC-C35	3	HP1-6	↓	AHU-C1	277V1PH	(2)#4mm², (1)#4mm²G, 16mm C.						
136	RHC-C36	4	HP1-76	JWICS CONF 201	AHU-C3	277V1PH	(2)#4mm², (1)#4mm²G, 16mm C.						
137	RHC-C37	3	HP1-55	STRAT AWARENESS 202	AHU-C3	277V1PH	(2)#4mm², (1)#4mm²G, 16mm C.						
138	RHC-C38	3	HP1-56		AHU-C3	277V1PH	(2)#4mm², (1)#4mm²G, 16mm C.						
139	RHC-C39	3	HP1-57	↓	AHU-C3	277V1PH	(2)#4mm², (1)#4mm²G, 16mm C.						
140	RHC-C40	2	HP1-66	SAR 203	AHU-C3	277V1PH	(2)#4mm², (1)#4mm²G, 16mm C.						
141	RHC-C41	4	HP1-77	HUMINT 204	AHU-C3	277V1PH	(2)#4mm², (1)#4mm²G, 16mm C.						
142	RHC-C42	3.5	HP1-74	3X SHOP 205	AHU-C3	277V1PH	(2)#4mm², (1)#4mm²G, 16mm C.						
143	RHC-C43	3.5	HP1-75	↓	AHU-C3	277V1PH	(2)#4mm², (1)#4mm²G, 16mm C.						
144	RHC-C44	1.5	HP1-72	3X OFFICE 206	AHU-C3	277V1PH	(2)#4mm², (1)#4mm²G, 16mm C.						
145	RHC-C45	2	HP1-67	IMAGERY 207	AHU-C3	277V1PH	(2)#4mm², (1)#4mm²G, 16mm C.						
146	RHC-C46	3	HP1-58	SITUATIONAL AWARENESS 208	AHU-C3	277V1PH	(2)#4mm², (1)#4mm²G, 16mm C.						
147	RHC-C47	3	HP1-59		AHU-C3	277V1PH	(2)#4mm², (1)#4mm²G, 16mm C.						
148	RHC-C48	3	HP1-60		AHU-C3	277V1PH	(2)#4mm², (1)#4mm²G, 16mm C.						
149	RHC-C49	3	HP1-61		AHU-C3	277V1PH	(2)#4mm², (1)#4mm²G, 16mm C.						
150	RHC-C50	3	HP1-62		AHU-C3	277V1PH	(2)#4mm², (1)#4mm²G, 16mm C.						
151	RHC-C51	3	HP1-63		AHU-C3	277V1PH	(2)#4mm², (1)#4mm²G, 16mm C.						
152	RHC-C52	3	HP1-64		AHU-C3	277V1PH	(2)#4mm², (1)#4mm²G, 16mm C.						
153	RHC-C53	3	HP1-65	↓	AHU-C3	277V1PH	(2)#4mm², (1)#4mm²G, 16mm C.						
154	RHC-C54	2	HP1-68	COMMS 209	AHU-C3	277V1PH	(2)#4mm², (1)#4mm²G, 16mm C.						
155	RHC-C55	2	HP1-69	↓	AHU-C3	277V1PH	(2)#4mm², (1)#4mm²G, 16mm C.						
156	RHC-C56	2	HP1-70	CONF 210	AHU-C3	277V1PH	(2)#4mm², (1)#4mm²G, 16mm C.						
157	RHC-C57	2	HP1-71	↓	AHU-C3	277V1PH	(2)#4mm², (1)#4mm²G, 16mm C.						
158	RHC-C58	0.5	HP1-72	BREAK 213	AHU-C3	277V1PH	(2)#4mm², (1)#4mm²G, 16mm C.						
159	RHC-C59	1	HP1-73	CORRIDOR 218	AHU-C3	277V1PH	(2)#4mm², (1)#4mm²G, 16mm C.						
160	RHC-C60	0.5	HP1-72	CORRIDOR 219	AHU-C3	277V1PH	(2)#4mm², (1)#4mm²G, 16mm C.						
161	RHC-C61	0.5	HP1-69	CORRIDOR 220	AHU-C3	277V1PH	(2)#4mm², (1)#4mm²G, 16mm C.						
162	RHC-C62	0.5	HP1-66	ELEC ROOM 221	AHU-C3	277V1PH	(2)#4mm², (1)#4mm²G, 16mm C.						
163	RHC-C63	0.5	HP1-73	ECP 222	AHU-C3	277V1PH	(2)#4mm², (1)#4mm²G, 16mm C.						
164	RHC-C64	0.5	HP1-71	ECP 223	AHU-C3	277V1PH	(2)#4mm², (1)#4mm²G, 16mm C.						
165	-												
166	-												
167	-												
168	-												
169	-												
170	-												
171	-												
172	-												
173	-												
174	-												
175	-												
176	-												
177	-												
178	-												
179	-												
180	-												
181	-												
182	-												
183	-												
184	-												
185	-												
186	-												
187	-												
188	-												
189	-												
190	-												
191	-												
192	-												
193	-												
194	-												
195	-												
196	-												
197	-												
198	-												
199	-												
200	-												

THESE DRAWINGS ARE "NOT APPROVED FOR CONSTRUCTION" SINCE THESE ARE BASED UPON ASSUMED CONDITIONS. THE CONTRACTOR SHALL NOT PROCEED WITH CONSTRUCTION UNTIL THE ASSUMED CONDITIONS ARE VALIDATED AND APPROVAL IS RECEIVED FROM THE CONTRACTING OFFICER.

STATE OF NEW YORK · KEVIN CHARLES TERRY · 073092 · LICENSED PROFESSIONAL ENGINEER

2/6/2012

UNLESS OTHERWISE NOTED, LINEAR DIMENSIONS SHOWN ARE IN MILLIMETERS.

DESIGN COMPLETE SUBMITTAL

SYMB	DESCRIPTION	DATE	APR
FNL	DESIGN COMPLETE SUBMITTAL	02-06-12	KCT

DESIGNED BY: JAS
DATE: 02-06-2012
DRAWN BY: SES
SUBMITTED BY: TETRA TECH
CHECKED BY: RWR
FILE NO.: AF1202A-E602SC

TETRA TECH

US Army Corps of Engineers
Middle East District

COMMAND & CONTROL FACILITY
KANDAHAR AIR FIELD, AFGHANISTAN
COMMAND & CONTROL FACILITY
EQUIPMENT CONNECTION SCHEDULE

SHEET REFERENCE NUMBER:
A
E-602

W:\23308\127-23308-11004\CAD\MED Drawings\AF1202\AF1202A\Electrical\AF1202A-E602SC.dwg 3/7/2012 9:53:39 AM Jeffers, Scott

CIPHER CONNECTION SCHEDULE - BUILDING C

ID#	RM#	ROOM NAME	BLDG	FLR	POWER SUPPLY	
					ID#	RM#
CC1	101	SOTF CDR	C	G	CPSC-2	112
CC2	102	SOTF XO	C	G	CPSC-2	112
CC3	103	SOTF CSM	C	G	CPSC-2	112
CC4	104	SOTF JAG	C	G	CPSC-1	112
CC5	105	ADJ RCP	C	G	CPSC-1	112
CC6	106	JVB	C	G	CPSC-2	112
CC7	107	JOC (LOWER)	C	G	CPSC-1	112
CC8	107	JOC (LOWER)	C	G	CPSC-4	112
CC9	108	OPCEN DIR	C	G	CPSC-4	112
CC10	109	OPCEN SGM	C	G	CPSC-4	112
CC11	110	S2	C	G	CPSC-4	112
CC12	111	J35 OFF	C	G	CPSC-2	112
CC13	112	ELEC ROOM	C	G	CPSC-3	112
CC14	114	LNO	C	G	CPSC-3	112
CC15	116	FUTURE PLANS	C	G	CPSC-3	112
CC16	119	MECH ROOM	C	G	CPSC-3	112
CC17	125	ECP	C	G	CPSC-4	112
CC18	126	ECP	C	G	CPSC-1	112
CC19	129	COMMS	C	G	CPSC-2	112
CC20	131	DV OFF	C	G	CPSC-4	112
CC21	107	JOC (UPPER)	C	1	CPSC-5	221
CC22	201	JWICS CONFERENCE ROOM	C	1	CPSC-6	221
CC23	202	STRAT AWARENESS	C	1	CPSC-6	221
CC24	203	SAR	C	1	CPSC-5	221
CC25	204	HUMINT	C	1	CPSC-5	221
CC26	205	3X SHOP	C	1	CPSC-6	221
CC27	206	3X OFFICE	C	1	CPSC-6	221
CC28	207	IMAGERY	C	1	CPSC-6	221
CC29	208	SITUATIONAL AWARENESS	C	1	CPSC-5	221
CC30	210	CONFERENCE ROOM	C	1	CPSC-5	221
CC31	222	ECP	C	1	CPSC-5	221
CC32	223	ECP	C	1	CPSC-6	221

SCHEDULE NOTES:

A. COORDINATE LOCATIONS OF POWER SUPPLIES WITH DOOR HARDWARE AND ACCESS CONTROL SYSTEMS INSTALLERS. ADHERE TO MANUFACTURER'S SPECIFICATIONS.

B. COORDINATE EXACT DOOR HARDWARE REQUIREMENTS WITH HARDWARE INSTALLER.

THESE DRAWINGS ARE "NOT APPROVED FOR CONSTRUCTION" SINCE THESE ARE BASED UPON ASSUMED CONDITIONS. THE CONTRACTOR SHALL NOT PROCEED WITH CONSTRUCTION UNTIL THE ASSUMED CONDITIONS ARE VALIDATED AND APPROVAL IS RECEIVED FROM THE CONTRACTING OFFICER.

STATE OF NEW YORK
KEVIN CHARLES LEGRO
073092
LICENSED PROFESSIONAL ENGINEER

2/6/2012

UNLESS OTHERWISE NOTED, LINEAR DIMENSIONS SHOWN ARE IN METERS.

DESIGN COMPLETE SUBMITTAL

SYMB	DESCRIPTION	DATE	APR
FNL	DESIGN COMPLETE SUBMITTAL	02-06-12	KCT

DESIGNED BY: JAS
DATE: 02-06-2012
DRAWN BY: SES
SUBMITTED BY: TETRA TECH
CHECKED BY: RWR
FILE NO.: AF1202A-E603SC

TETRA TECH

US Army Corps of Engineers
Middle East District

COMMAND & CONTROL FACILITY
KANDAHAR AIR FIELD, AFGHANISTAN
COMMAND & CONTROL FACILITY
CIPHER CONNECTION SCHEDULE

SHEET REFERENCE NUMBER:
A
E-603

W:\23308\127-23308-11004\CAD\MED Drawings\AF1202\AF1202A\Electrical\AF1202A-E603SC.dwg 3/7/2012 9:54:02 AM Jeffers, Scott

LOCATION:
ELEC ROOM 112

PANELBOARD PP1 (SECT–1) SURFACE MOUNTED 10K AIC SYM. A.I.C. MIN.
– AMP. MAIN LUGS (OR) 225 AMP. MAIN BREAKER W/ 225 AMP. TRIP
CIRCUIT BREAKER TYPE 208/120 VOLTS 3 PHASE 4 WIRE 60 HZ 225 AMP. BUS

CKT. NO.	NO. POLES	TRIP AMPS	WIRE MM²	GND MM²	CONDUIT MM	LOAD SERVED	LOAD–V.A. A0	LOAD–V.A. B0	LOAD–V.A. C0	LOAD–V.A. A0	LOAD–V.A. B0	LOAD–V.A. C0	LOAD SERVED	CONDUIT MM	GND MM²	WIRE MM²	TRIP AMPS	NO. POLES	CKT. NO.
1	1	20	4	4	16	FB:107 (ROW 1)	800			800			FB:107 (ROW 3)	16	4	4	20	1	2
3	1	20	4	4	16	FB:107 (ROW 1)		800			800		FB:107 (ROW 3)	16	4	4	20	1	4
5	1	20	4	4	16	FB:107 (ROW 1)			800			800	FB:107 (ROW 3)	16	4	4	20	1	6
7	1	20	4	4	16	FB:107 (ROW 1)	800			800			FB:107 (ROW 3)	16	4	4	20	1	8
9	1	20	4	4	16	FB:107 (ROW 1)		800			800		FB:107 (ROW 3)	16	4	4	20	1	10
11	1	20	4	4	16	FB:107 (ROW 1)			800			800	FB:107 (ROW 3)	16	4	4	20	1	12
13	1	20	4	4	16	FB:107 (ROW 1)	800			800			FB:107 (ROW 3)	16	4	4	20	1	14
15	1	20	4	4	16	FB:107 (ROW 1)		800			800		FB:107 (ROW 3)	16	4	4	20	1	16
17	1	20	4	4	16	FB:107 (ROW 1)			800			800	FB:107 (ROW 3)	16	4	4	20	1	18
19	1	20	4	4	16	FB:107 (ROW 1)	800			800			FB:107 (ROW 3)	16	4	4	20	1	20
21	1	20	4	4	16	FB:107 (ROW 2)		800			800		FB:107 (ROW 4)	16	4	4	20	1	22
23	1	20	4	4	16	FB:107 (ROW 2)			800			800	FB:107 (ROW 4)	16	4	4	20	1	24
25	1	20	4	4	16	FB:107 (ROW 2)	800			800			FB:107 (ROW 4)	16	4	4	20	1	26
27	1	20	4	4	16	FB:107 (ROW 2)		800			800		FB:107 (ROW 4)	16	4	4	20	1	28
29	1	20	4	4	16	FB:107 (ROW 2)			800			800	FB:107 (ROW 4)	16	4	4	20	1	30
31	1	20	4	4	16	FB:107 (ROW 2)	800			800			FB:107 (ROW 4)	16	4	4	20	1	32
33	1	20	4	4	16	FB:107 (ROW 2)		800			800		FB:107 (ROW 4)	16	4	4	20	1	34
35	1	20	4	4	16	FB:107 (ROW 2)			800			800	FB:107 (ROW 4)	16	4	4	20	1	36
37	1	20	4	4	16	FB:107 (ROW 2)	800			800			FB:107 (ROW 4)	16	4	4	20	1	38
39	1	20	4	4	16	FB:107 (ROW 2)		800			800		FB:107 (ROW 4)	16	4	4	20	1	40
41	1	20	4	4	16	RECPT: 107			800			400	TV RECPT: 107	16	4	4	20	1	42
43	1	20	4	4	16	TV RECPT: 102, 127	400			400			TV RECPT: 103, 105	16	4	4	20	1	44
45	1	20	4	4	16	TV RECPT: 106, 128		400			400		TV RECPT: 101, 104	16	4	4	20	1	46
47	1	20	–	–	–	SPARE			–			–	SPARE	–	–	–	20	1	48
49	3	15	10	10	20	FUEL TRANSFER PUMP	1123			–			SPARE	–	–	–	20	1	50
51								1123			–		SPARE	–	–	–	20	1	52
53									1123			–	SPARE	–	–	–	20	1	54
							7123	7123	6723	6000	6000	5200							

*=GFI **=SHUNT TRIP

TOTAL CONN. LOAD PER PHASE (KVA): A0 36.4 B0 38.1 C0 37.7

TOTAL CONN. LOAD 112.2 KVA. – % DEMAND = ESTIMATED DEMAND LOAD 64.9 KVA SUPPLIED FROM: MSB (VIA T1)

LOCATION:
ELEC ROOM 112

PANELBOARD PP1 (SECT–2) SURFACE MOUNTED 10K AIC SYM. A.I.C. MIN.
225 AMP. MAIN LUGS (OR) ––– AMP. MAIN BREAKER W/ ––– AMP. TRIP
CIRCUIT BREAKER TYPE 208/120 VOLTS 3 PHASE 4 WIRE 60 HZ 225 AMP. BUS

CKT. NO.	NO. POLES	TRIP AMPS	WIRE MM²	GND MM²	CONDUIT MM	LOAD SERVED	LOAD–V.A. A0	LOAD–V.A. B0	LOAD–V.A. C0	LOAD–V.A. A0	LOAD–V.A. B0	LOAD–V.A. C0	LOAD SERVED	CONDUIT MM	GND MM²	WIRE MM²	TRIP AMPS	NO. POLES	CKT. NO.
55	1	20	4	4	16	FB:107 (LEFT WALL)	800			800			FB:107 (RIGHT WALL)	16	4	4	20	1	56
57	1	20	4	4	16	FB:107 (LEFT WALL)		800			800		FB:107 (RIGHT WALL)	16	4	4	20	1	58
59	1	20	4	4	16	FB:107 (LEFT WALL)			800			800	FB:107 (RIGHT WALL)	16	4	4	20	1	60
61	1	20	4	4	16	FB:107 (LEFT WALL)	800			800			FB:107 (RIGHT WALL)	16	4	4	20	1	62
63	1	20	4	4	16	FB:107 (LEFT WALL)		800			800		FB:107 (RIGHT WALL)	16	4	4	20	1	64
65	1	20	4	4	16	FB:107 (LEFT WALL)			800			800	FB:107 (RIGHT WALL)	16	4	4	20	1	66
67	1	20	4	4	16	FB:107 (LEFT WALL)	800			800			FB:107 (RIGHT WALL)	16	4	4	20	1	68
69	1	20	4	4	16	FB:107 (LEFT WALL)		800			800		FB:107 (RIGHT WALL)	16	4	4	20	1	70
71	1	20	4	4	16	FB:107 (LEFT WALL)			800			800	FB:107 (RIGHT WALL)	16	4	4	20	1	72
73	1	20	4	4	16	FB:107 (LEFT WALL)	800			800			FB:107 (RIGHT WALL)	16	4	4	20	1	74
75	1	20	4	4	16	FB:107 (ROW 5)		800			800		CIPHERLOCKS (CPSC–1)	16	4	4	20	1	76
77	1	20	4	4	16	FB:107 (ROW 5)			800			800	CIPHERLOCKS (CPSC–2)	16	4	4	20	1	78
79	1	20	4	4	16	FB:107 (ROW 5)	800			400			TV RECPT: 108, 109	16	4	4	20	1	80
81	1	20	4	4	16	FB:107 (ROW 5)		800			400		TV RECPT: 110, 131	16	4	4	20	1	82
83	1	20	4	4	16	FB:107 (ROW 5)			800			400	TV RECPT: 111, 116	16	4	4	20	1	84
85	1	20	4	4	16	FB:107 (ROW 5)	800			200			TV RECPT: 114	16	4	4	20	1	86
87	1	20	4	4	16	FB:107 (ROW 5)		800			–		SPARE	–	–	–	20	1	88
89	1	20	4	4	16	FB:107 (ROW 5)			800			468	SUNSHADE	16	4	6	20	1	90
91	1	20	4	4	16	FB:107 (ROW 5)	800			480			GENSET BATT CHARGER	16	4	6	20	1	92
93	1	20	4	4	16	FB:107 (ROW 5)		800			1200		RECEPT: 123, 124, 122, 132	16	4	4	20	1	94
95	1	20	4	4	16	FB:127			800			1200	RECEPT: 119, 112	16	4	4	20	1	96
97	1	20	4	4	16	FB:127	800			600			RECEPT: 129	16	4	4	20	1	98
99	1	20	4	4	16	FB:128		800			1000		RECEPT: 117, 118, 120, 121	16	4	4	20	1	100
101	1	20	4	4	16	FB:128			800			1300	MICROWAVE (117)	16	4	4	20	1	102
103	1	20	–	–	–	SPARE	–			–			SPARE	–	–	–	20	1	104
105	1	20	–	–	–	SPARE		–			–		SPARE	–	–	–	20	1	106
107	1	20	–	–	–	SPARE			–			–	SPARE	–	–	–	20	1	108
							6400	6400	6400	4800	5800	6560							

*=GFI **=SHUNT TRIP

TOTAL CONN. LOAD PER PHASE (KVA): A0 11.3 B0 12.2 C0 13.0

TOTAL CONN. LOAD 36.4 KVA. – % DEMAND = ESTIMATED DEMAND LOAD – KVA SUPPLIED FROM: SECTION 1

LOCATION:
ELEC ROOM 112

PANELBOARD PP1 (SECT–3) SURFACE MOUNTED 10K AIC SYM. A.I.C. MIN.
225 AMP. MAIN LUGS (OR) ––– AMP. MAIN BREAKER W/ ––– AMP. TRIP
CIRCUIT BREAKER TYPE 208/120 VOLTS 3 PHASE 4 WIRE 60 HZ 225 AMP. BUS

CKT. NO.	NO. POLES	TRIP AMPS	WIRE MM²	GND MM²	CONDUIT MM	LOAD SERVED	LOAD–V.A. A0	LOAD–V.A. B0	LOAD–V.A. C0	LOAD–V.A. A0	LOAD–V.A. B0	LOAD–V.A. C0	LOAD SERVED	CONDUIT MM	GND MM²	WIRE MM²	TRIP AMPS	NO. POLES	CKT. NO.
109	1	20	4	4	16	FB:129	800			800			FB:101	16	4	4	20	1	110
111	1	20	4	4	16	FB:129		800			800		FB:101	16	4	4	20	1	112
113	1	20	4	4	16	FB:129			800			800	FB:101	16	4	4	20	1	114
115	1	20	4	4	16	FB:129	800			800			FB:101	16	4	4	20	1	116
117	1	20	4	4	16	FB:129		800			800		FB:101	16	4	4	20	1	118
119	1	20	4	4	16	FB:129			800			800	FB:101	16	4	4	20	1	120
121	1	20	4	4	16	FB:129	800			800			FB:101	16	4	4	20	1	122
123	1	20	4	4	16	FB:129		800			800		FB:101	16	4	4	20	1	124
125	1	20	4	4	16	FB:129			800			800	FB:101	16	4	4	20	1	126
127	1	20	4	4	16	FB:129	800			–			SPARE	–	–	–	20	1	128
129	1	20	4	4	16	FB:129		800			800		FB:104	16	4	4	20	1	130
131	1	20	4	4	16	FB:129			800			800	FB:104	16	4	4	20	1	132
133	1	20	4	4	16	FB:129	800			800			FB:104	16	4	4	20	1	134
135	1	20	4	4	16	FB:129		800			800		FB:104	16	4	4	20	1	136
137	1	20	4	4	16	FB:129			800			800	FB:105	16	4	4	20	1	138
139	1	20	4	4	16	FB:129	800			800			FB:105	16	4	4	20	1	140
141	1	20	4	4	16	FB:129		800			800		FB:105	16	4	4	20	1	142
143	1	20	4	4	16	FB:129			800			800	FB:105	16	4	4	20	1	144
145	1	20	4	4	16	FB:129	800			800			FB:103	16	4	4	20	1	146
147	1	20	4	4	16	FB:129		800			800		FB:103	16	4	4	20	1	148
149	1	20	4	4	16	FB:129			800			800	FB:102	16	4	4	20	1	150
151	1	20	4	4	16	FB:129	800			800			FB:102	16	4	4	20	1	152
153	1	20	4	4	16	FB:129		800			800		FB:106	16	4	4	20	1	154
155	1	20	4	4	16	FB:129			800			800	FB:106	16	4	4	20	1	156
157	1	20	–	–	–	SPARE	–			–			TVSS	–	–	–	***	3	158
159	1	20	–	–	–	SPARE		–			–								160
161	1	20	–	–	–	SPARE			–			–							162
							6400	6400	6400	5600	6400	6400							

*=GFI **=SHUNT TRIP
***=MANUFACTURERS RECOMMENDATION

TOTAL CONN. LOAD PER PHASE (KVA): A0 12.0 B0 12.8 C0 12.8

TOTAL CONN. LOAD 37.6 KVA. – % DEMAND = ESTIMATED DEMAND LOAD – KVA SUPPLIED FROM: SECTION 1

PANEL PP1	CONNECTED LOAD VA	DEMAND FACTOR	DEMAND LOAD VA
Lighting		125%	
Recept*	106,300	Note 1	58,150
HVAC		100%	
Other	2,548	100%	2,548
Large Motor	3,369	125%	4,211
Other Motor		100%	
Sub Feed Pnl		100%	
Total Load =	112,217		64,909
Amps =	311		180
Note 1:			
* Per NEC 220.44, 1st 10,000VA at 100%,			
remainder over 10,000VA at 50%			

THESE DRAWINGS ARE "NOT APPROVED FOR CONSTRUCTION" SINCE THESE ARE BASED UPON ASSUMED CONDITIONS. THE CONTRACTOR SHALL NOT PROCEED WITH CONSTRUCTION UNTIL THE ASSUMED CONDITIONS ARE VALIDATED AND APPROVAL IS RECEIVED FROM THE CONTRACTING OFFICER.

STATE OF NEW YORK · KEVIN CHARLES LEGERE · 079082 · LICENSED PROFESSIONAL ENGINEER

2/6/2012

UNLESS OTHERWISE NOTED, LINEAR DIMENSIONS SHOWN ARE IN MILLIMETERS.

DESIGN COMPLETE SUBMITTAL

SYMB	DESCRIPTION	DATE	APR
FNL	DESIGN COMPLETE SUBMITTAL	02–06–12	KCT

DESIGNED BY: JAS
DATE: 02–06–2012
DRAWN BY: SES
SUBMITTED BY: TETRA TECH
CHECKED BY: RWR
FILE NO.: AF1202A–E611SC

TETRA TECH

US Army Corps of Engineers
Middle East District

COMMAND & CONTROL FACILITY
KANDAHAR AIR FIELD, AFGHANISTAN
COMMAND & CONTROL FACILITY
PANEL SCHEDULE – PP1

SHEET REFERENCE NUMBER:
A
E–611

W:\23308\127–23308–11004\CAD\MED Drawings\AF1202\AF1202A\Electrical\AF1202A–E611SC.dwg 3/7/2012 9:54:31 AM Jeffers, Scott

LOCATION:
ELEC ROOM 112

PANELBOARD PP2 (SECT-1) SURFACE MOUNTED 10K AIC SYM. A.I.C. MIN.
– AMP. MAIN LUGS (OR) 125 AMP. MAIN BREAKER W/ 125 AMP. TRIP
CIRCUIT BREAKER TYPE 208/120 VOLTS 3 PHASE 4 WIRE 60 HZ 125 AMP. BUS

CKT. NO.	NO. POLES	TRIP AMPS	WIRE MM²	GND MM²	CONDUIT MM	LOAD SERVED	LOAD-V.A. A0	LOAD-V.A. B0	LOAD-V.A. C0	LOAD-V.A. A0	LOAD-V.A. B0	LOAD-V.A. C0	LOAD SERVED	CONDUIT MM	GND MM²	WIRE MM²	TRIP AMPS	NO. POLES	CKT. NO.
1	1	20	4	4	16	FB:116	800			800			FB:116	16	4	4	20	1	2
3	1	20	4	4	16	FB:116		800			800		FB:116	16	4	4	20	1	4
5	1	20	4	4	16	FB:116			800			800	FB:116	16	4	4	20	1	6
7	1	20	4	4	16	FB:116	800			800			FB:116	16	4	4	20	1	8
9	1	20	4	4	16	FB:116		800			800		FB:116	16	4	4	20	1	10
11	1	20	4	4	16	FB:116			800			800	FB:116	16	4	4	20	1	12
13	1	20	4	4	16	FB:116	800			800			FB:116	16	4	4	20	1	14
15	1	20	4	4	16	FB:116		800			800		FB:116	16	4	4	20	1	16
17	1	20	4	4	16	FB:116			800			800	FB:116	16	4	4	20	1	18
19	1	20	4	4	16	FB:116	800			800			FB:116	16	4	4	20	1	20
21	1	20	4	4	16	FB:116		800			800		FB:116	16	4	4	20	1	22
23	1	20	4	4	16	FB:116			800			800	FB:116	16	4	4	20	1	24
25	1	20	4	4	16	FB:116	800			800			FB:116	16	4	4	20	1	26
27	1	20	4	4	16	FB:116		800			800		FB:116	16	4	4	20	1	28
29	1	20	4	4	16	FB:116			800			800	FB:116	16	4	4	20	1	30
31	1	20	4	4	16	FB:116	800			–			SPARE	–	–	–	20	1	32
33	1	20	–	–	–	SPARE		–			–		SPARE	–	–	–	20	1	34
35	1	20	–	–	–	SPARE			–			–	SPARE	–	–	–	20	1	36
37	1	20	–	–	–	SPARE	–			–			SPARE	–	–	–	20	1	38
39	1	20	–	–	–	SPARE		–			–		SPARE	–	–	–	20	1	40
41	–	–	–	–	–	–			–			–	–	–	–	–	–	–	42
43	–	–	–	–	–	–	–			–			–	–	–	–	–	–	44
45	–	–	–	–	–	–		–			–		–	–	–	–	–	–	46
47	1	20	4	4	16	CIPHER LOCKS (CPSC-3)			800			–	–	–	–	–	–	–	48
49	1	20	4	4	16	CIPHER LOCKS (CPSC-4)	800			–			–	–	–	–	–	–	50
51	1	15	4	4	16	EF-C1, EF-C2		936			–		–	–	–	–	–	–	52
53	1	15	4	4	16	EF-C3, EF-C4			480			–	–	–	–	–	–	–	54
							5600	4936	5280	4000	4000	4000							

*=GFI **=SHUNT TRIP

TOTAL CONN. LOAD 51.8 KVA. – % DEMAND = ESTIMATED DEMAND LOAD 32.0 KVA

TOTAL CONN. LOAD PER PHASE (KVA): A0 18.4 B0 16.9 C0 16.5
SUPPLIED FROM: MSB (VIA T2)

LOCATION:
ELEC ROOM 112

PANELBOARD PP2 (SECT-2) SURFACE MOUNTED 10K AIC SYM. A.I.C. MIN.
125 AMP. MAIN LUGS (OR) --- AMP. MAIN BREAKER W/ --- AMP. TRIP
CIRCUIT BREAKER TYPE 208/120 VOLTS 3 PHASE 4 WIRE 60 HZ 125 AMP. BUS

CKT. NO.	NO. POLES	TRIP AMPS	WIRE MM²	GND MM²	CONDUIT MM	LOAD SERVED	LOAD-V.A. A0	LOAD-V.A. B0	LOAD-V.A. C0	LOAD-V.A. A0	LOAD-V.A. B0	LOAD-V.A. C0	LOAD SERVED	CONDUIT MM	GND MM²	WIRE MM²	TRIP AMPS	NO. POLES	CKT. NO.
55	1	20	4	4	16	FB:111	800			800			FB:114	16	4	4	20	1	56
57	1	20	4	4	16	FB:111		800			800		FB:114	16	4	4	20	1	58
59	1	20	4	4	16	FB:111			800			800	FB:114	16	4	4	20	1	60
61	1	20	4	4	16	FB:111	800			800			FB:114	16	4	4	20	1	62
63	1	20	4	4	16	FB:111		800			800		FB:114	16	4	4	20	1	64
65	1	20	4	4	16	FB:111			800			800	FB:114	16	4	4	20	1	66
67	1	20	4	4	16	FB:111	800			800			FB:114	16	4	4	20	1	68
69	1	20	4	4	16	FB:111		800			–		SPARE	16	4	4	20	1	70
71	1	20	4	4	16	FB:111			800			800	FB:131	16	4	4	20	1	72
73	1	20	4	4	16	FB:111	800			800			FB:131	16	4	4	20	1	74
75	1	20	4	4	16	FB:111		800			800		FB:110	16	4	4	20	1	76
77	1	20	4	4	16	FB:111			800			800	FB:110	16	4	4	20	1	78
79	1	20	4	4	16	FB:111	800			800			FB:109	16	4	4	20	1	80
81	1	20	4	4	16	FB:111		800			800		FB:109	16	4	4	20	1	82
83	1	20	–	–	–	SPARE			–			800	FB:108	16	4	4	20	1	84
85	1	20	–	–	–	SPARE	–			800			FB:108	16	4	4	20	1	86
87	1	20	–	–	–	SPARE		–			–		SPARE	–	–	–	20	1	88
89	1	20	–	–	–	SPARE			–			–	SPARE	–	–	–	20	1	90
91	1	20	–	–	–	SPARE	–			–			SPARE	–	–	–	20	1	92
93	–	–	–	–	–	–		–			–		–	–	–	–	–	–	94
95	–	–	–	–	–	–			–			–	–	–	–	–	–	–	96
97	–	–	–	–	–	–	–			–			–	–	–	–	–	–	98
99	–	–	–	–	–	–		–			–		–	–	–	–	–	–	100
101	–	–	–	–	–	–			–			–	–	–	–	–	–	–	102
103	–	–	–	–	–	–	–			–			TVSS	–	–	–	***	3	104
105	–	–	–	–	–	–		–			–								106
107	–	–	–	–	–	–			–			–							108
							4000	4000	3200	4800	4000	4000							

*=GFI **=SHUNT TRIP
***=MANUFACTURER'S RECOMMENDATION

TOTAL CONN. LOAD 23.2 KVA. – % DEMAND = ESTIMATED DEMAND LOAD – KVA

TOTAL CONN. LOAD PER PHASE (KVA): A0 8.8 B0 8.0 C0 7.2
SUPPLIED FROM: SECTION 1

PANEL PP2	CONNECTED LOAD VA	DEMAND FACTOR	DEMAND LOAD VA
Lighting		125%	
Recept	48000	Note 1	29000
HVAC	1416	100%	1416
Other	1600	100%	1600
Large Motor		125%	
Other Motor		100%	
Total Load =	51,016		32,016
Amps =	141.71		88.93
Note 1:			
* Per NEC 220.44, 1st 10,000VA at 100%,			
remainder over 10,000VA at 50%			

THESE DRAWINGS ARE "NOT APPROVED FOR CONSTRUCTION" SINCE THESE ARE BASED UPON ASSUMED CONDITIONS. THE CONTRACTOR SHALL NOT PROCEED WITH CONSTRUCTION UNTIL THE ASSUMED CONDITIONS ARE VALIDATED AND APPROVAL IS RECEIVED FROM THE CONTRACTING OFFICER.

STATE OF NEW YORK
KEVIN CHARLES LEGRO
079092
LICENSED PROFESSIONAL ENGINEER
2/6/2012

UNLESS OTHERWISE NOTED, LINEAR DIMENSIONS SHOWN ARE IN MILLIMETERS.

DESIGN COMPLETE SUBMITTAL

SYMB	DESCRIPTION	DATE	APR
FNL	DESIGN COMPLETE SUBMITTAL	02-06-12	KCT

DESIGNED BY: JAS
DATE: 02-06-2012
DRAWN BY: SES
SUBMITTED BY: TETRA TECH
CHECKED BY: RWR
FILE NO.: AF1202A-E612SC

TETRA TECH

US Army Corps of Engineers
Middle East District

COMMAND & CONTROL FACILITY
KANDAHAR AIR FIELD, AFGHANISTAN
COMMAND & CONTROL FACILITY
PANEL SCHEDULE – PP2

SHEET REFERENCE NUMBER:
A
E-612

W:\23308\127-23308-11004\CAD\MED Drawings\AF1202\AF1202A\Electrical\AF1202A-E612SC.dwg 3/7/2012 9:54:54 AM Jeffers, Scott

W:\23308\127-23308-11004\CAD\MED Drawings\AF1202\AF1202A\Electrical\AF1202A-E613SC.dwg 3/7/2012 9:55:22 AM Jeffers, Scott

LOCATION:
ELEC ROOM 221

PANELBOARD PP3 (SECT-1) SURFACE MOUNTED 10K AIC SYM. A.I.C. MIN.
– AMP. MAIN LUGS (OR) 225 AMP. MAIN BREAKER W/ 225 AMP. TRIP
CIRCUIT BREAKER TYPE 208/120 VOLTS 3 PHASE 4 WIRE 60 HZ 225 AMP. BUS

CKT. NO.	NO. POLES	TRIP AMPS	WIRE MM^2	GND MM^2	CONDUIT MM	LOAD SERVED	LOAD-V.A. A0	LOAD-V.A. B0	LOAD-V.A. C0	LOAD-V.A. A0	LOAD-V.A. B0	LOAD-V.A. C0	LOAD SERVED	CONDUIT MM	GND MM^2	WIRE MM^2	TRIP AMPS	NO. POLES	CKT. NO.
1	1	20	4	4	16	FB: 208	800			800			FB: 208	16	4	4	20	1	2
3	1	20	4	4	16	FB: 208		800			800		FB: 208	16	4	4	20	1	4
5	1	20	4	4	16	FB: 208			800			800	FB: 208	16	4	4	20	1	6
7	1	20	4	4	16	FB: 208	800			800			FB: 208	16	4	4	20	1	8
9	1	20	4	4	16	FB: 208		800			800		FB: 208	16	4	4	20	1	10
11	1	20	4	4	16	FB: 208			800			800	FB: 208	16	4	4	20	1	12
13	1	20	4	4	16	FB: 208	800			800			FB: 208	16	4	4	20	1	14
15	1	20	4	4	16	FB: 208		800			800		FB: 208	16	4	4	20	1	16
17	1	20	4	4	16	FB: 208			800			800	FB: 208	16	4	4	20	1	18
19	1	20	4	4	16	FB: 208	800			800			FB: 208	16	4	4	20	1	20
21	1	20	4	4	16	FB: 208		800			800		FB: 208	16	4	4	20	1	22
23	1	20	4	4	16	FB: 208			800			800	FB: 208	16	4	4	20	1	24
25	1	20	4	4	16	FB: 208	800			800			FB: 208	16	4	4	20	1	26
27	1	20	4	4	16	FB: 208		800			800		FB: 208	16	4	4	20	1	28
29	1	20	4	4	16	FB: 208			800			800	FB: 208	16	4	4	20	1	30
31	1	20	4	4	16	FB: 208	800			800			FB: 208	16	4	4	20	1	32
33	1	20	4	4	16	FB: 208		800			800		FB: 208	16	4	4	20	1	34
35	1	20	4	4	16	FB: 208			800			800	FB: 208	16	4	4	20	1	36
37	1	20	4	4	16	FB: 208	800			800			FB: 208	16	4	4	20	1	38
39	1	20	4	4	16	FB: 208		800			800		FB: 208	16	4	4	20	1	40
41	1	20	4	4	16	TV RECPT: 201, 202			400			200	TV RECPT: 204	16	4	4	20	1	42
43	1	20	4	4	16	TV RECPT: 203, 207	400			400			TV RECPT: 208, 210	16	4	4	20	1	44
45	1	20	4	4	16	TV RECPT: 205, 206		400			–		SPARE	–	–	–	20	1	46
47	1	20	–	–	–	SPARE			–			–	SPARE	–	–	–	20	1	48
49	1	20	–	–	–	SPARE	–			–			SPARE	–	–	–	20	1	50
51	1	20	–	–	–	SPARE		–			–		SPARE	–	–	–	20	1	52
53	1	20	–	–	–	SPARE			–			–	SPARE	–	–	–	20	1	54
							6000	6000	5200	6000	4800	5000							

*=GFI **=SHUNT TRIP

TOTAL CONN. LOAD 104.0 KVA. – % DEMAND = ESTIMATED DEMAND LOAD 59.3 KVA

TOTAL CONN. LOAD PER PHASE (KVA): A0 34.9 B0 34.3 C0 34.7
SUPPLIED FROM: MSB (VIA T3)

LOCATION:
ELEC ROOM 221

PANELBOARD PP3 (SECT-3) SURFACE MOUNTED 10K AIC SYM. A.I.C. MIN.
225 AMP. MAIN LUGS (OR) ___ AMP. MAIN BREAKER W/ ___ AMP. TRIP
CIRCUIT BREAKER TYPE 208/120 VOLTS 3 PHASE 4 WIRE 60 HZ 225 AMP. BUS

CKT. NO.	NO. POLES	TRIP AMPS	WIRE MM^2	GND MM^2	CONDUIT MM	LOAD SERVED	LOAD-V.A. A0	LOAD-V.A. B0	LOAD-V.A. C0	LOAD-V.A. A0	LOAD-V.A. B0	LOAD-V.A. C0	LOAD SERVED	CONDUIT MM	GND MM^2	WIRE MM^2	TRIP AMPS	NO. POLES	CKT. NO.
109	1	20	4	4	16	FB: 202	800			800			FB: 205	16	4	4	20	1	110
111	1	20	4	4	16	FB: 202		800			800		FB: 205	16	4	4	20	1	112
113	1	20	4	4	16	FB: 202			800			800	FB: 205	16	4	4	20	1	114
115	1	20	4	4	16	FB: 202	800			800			FB: 205	16	4	4	20	1	116
117	1	20	4	4	16	FB: 202		800			800		FB: 205	16	4	4	20	1	118
119	1	20	4	4	16	FB: 202			800			800	FB: 205	16	4	4	20	1	120
121	1	20	4	4	16	FB: 202	800			800			FB: 205	16	4	4	20	1	122
123	1	20	4	4	16	FB: 202		800			800		FB: 205	16	4	4	20	1	124
125	1	20	4	4	16	FB: 202			800			800	FB: 205	16	4	4	20	1	126
127	1	20	4	4	16	FB: 202	800			800			FB: 205	16	4	4	20	1	128
129	1	20	4	4	16	FB: 202		800			800		FB: 205	16	4	4	20	1	130
131	1	20	4	4	16	FB: 202			800			800	FB: 205	16	4	4	20	1	132
133	1	20	–	–	–	SPARE	–			800			FB: 205	16	4	4	20	1	134
135	1	20	–	–	–	SPARE		–			800		FB: 205	16	4	4	20	1	136
137	1	20	4	4	16	FB: 204			800			800	FB: 206	16	4	4	20	1	138
139	1	20	4	4	16	FB: 204	800			800			FB: 206	16	4	4	20	1	140
141	1	20	4	4	16	FB: 204		800			800		FB: 206	16	4	4	20	1	142
143	1	20	4	4	16	FB: 204			800			800	FB: 206	16	4	4	20	1	144
145	1	20	4	4	16	FB: 204	800			–			SPARE	–	–	–	20	1	146
147	1	20	4	4	16	FB: 204		800			–		SPARE	–	–	–	20	1	148
149	1	20	4	4	16	FB: 204			800			–	SPARE	–	–	–	20	1	150
151	1	20	4	4	16	FB: 204	800			–			SPARE	–	–	–	20	1	152
153	1	20	4	4	16	FB: 204		800			800		CIPHER LOCKS (CPSC-5)	16	4	4	20	1	154
155	1	20	4	4	16	FB: 204			800			800	CIPHER LOCKS (CPSC-6)	16	4	4	20	1	156
157	1	20	4	4	16	FB: 204	800			–			TVSS	–	–	–	***	3	158
159	1	20	4	4	16	FB: 204		800			–		↓	↓	↓	↓	↓	↓	160
161	1	20	–	–	–	SPARE			–			–	↓	↓	↓	↓	↓	↓	162
							6400	6400	6400	4800	5600	5600							

*=GFI **=SHUNT TRIP
***=MANUFACTURERS RECOMMENDATION

TOTAL CONN. LOAD 35.2 KVA. – % DEMAND = ESTIMATED DEMAND LOAD – KVA

TOTAL CONN. LOAD PER PHASE (KVA): A0 11.2 B0 12.0 C0 12.0
SUPPLIED FROM: SECTION 1

LOCATION:
ELEC ROOM 221

PANELBOARD PP3 (SECT-2) SURFACE MOUNTED 10K AIC SYM. A.I.C. MIN.
225 AMP. MAIN LUGS (OR) ___ AMP. MAIN BREAKER W/ ___ AMP. TRIP
CIRCUIT BREAKER TYPE 208/120 VOLTS 3 PHASE 4 WIRE 60 HZ 225 AMP. BUS

CKT. NO.	NO. POLES	TRIP AMPS	WIRE MM^2	GND MM^2	CONDUIT MM	LOAD SERVED	LOAD-V.A. A0	LOAD-V.A. B0	LOAD-V.A. C0	LOAD-V.A. A0	LOAD-V.A. B0	LOAD-V.A. C0	LOAD SERVED	CONDUIT MM	GND MM^2	WIRE MM^2	TRIP AMPS	NO. POLES	CKT. NO.
55	1	20	4	4	16	FB: 210	800			800			FB: 201	16	4	4	20	1	56
57	1	20	4	4	16	FB: 210		800			800		FB: 201	16	4	4	20	1	58
59	1	20	4	4	16	FB: 210			800			800	FB: 201	16	4	4	20	1	60
61	1	20	4	4	16	FB: 210	800			800			FB: 201	16	4	4	20	1	62
63	1	20	4	4	16	FB: 210		800			800		FB: 201	16	4	4	20	1	64
65	1	20	4	4	16	FB: 210			800			800	FB: 201	16	4	4	20	1	66
67	1	20	4	4	16	FB: 210	800			800			FB: 201	16	4	4	20	1	68
69	1	20	4	4	16	FB: 210		800			800		FB: 201	16	4	4	20	1	70
71	1	20	4	4	16	FB: 210			800			800	FB: 201	16	4	4	20	1	72
73	1	20	4	4	16	FB: 210	800			800			FB: 201	16	4	4	20	1	74
75	1	20	4	4	16	FB: 210		800			800		FB: 201	16	4	4	20	1	76
77	1	20	4	4	16	FB: 210			800			800	FB: 201	16	4	4	20	1	78
79	1	20	–	–	–	SPARE	–			–			SPARE	–	–	–	20	1	80
81	1	20	–	–	–	SPARE		–			–		SPARE	–	–	–	20	1	82
83	1	20	4	4	16	FB: 203			800			800	FB: 207	16	4	4	20	1	84
85	1	20	4	4	16	FB: 203	800			800			FB: 207	16	4	4	20	1	86
87	1	20	4	4	16	FB: 203		800			800		FB: 207	16	4	4	20	1	88
89	1	20	4	4	16	FB: 203			800			800	FB: 207	16	4	4	20	1	90
91	1	20	4	4	16	FB: 203	800			800			FB: 207	16	4	4	20	1	92
93	1	20	4	4	16	FB: 203		800			800		FB: 207	16	4	4	20	1	94
95	1	20	4	4	16	RECEPT: 213, 215, 216, 217			1000			–	SPARE	–	–	–	20	1	96
97	1	20	4	4	16	RECEPT: 219	800			–			SPARE	–	–	–	20	1	98
99	1	20	4	4	16	RECEPT: 209, 221		1000			–		SPARE	–	–	–	20	1	100
101	1	20	4	4	16	FRIDGE			500			–	SPARE	–	–	–	20	1	102
103	1	20	4	4	16	MICROWAVE	1300			–			SPARE	–	–	–	20	1	104
105	1	20	4	4	16	EF-C5, EF-C6		936			–		SPARE	–	–	–	20	1	106
107	1	20	4	4	16	EF-C7, EF-C8			1392			–	SPARE	–	–	–	20	1	108
							3900	6736	7692	4800	4800	4800							

*=GFI **=SHUNT TRIP

TOTAL CONN. LOAD 35.7 KVA. – % DEMAND = ESTIMATED DEMAND LOAD – KVA

TOTAL CONN. LOAD PER PHASE (KVA): A0 11.7 B0 11.5 C0 12.5
SUPPLIED FROM: SECTION 1

PANEL PP3	CONNECTED LOAD VA	DEMAND FACTOR	DEMAND LOAD VA
Lighting		125%	
Recept *	100000	Note 1	55000
HVAC	2328	100%	2328
Other	1600	100%	1600
Large Motor		125%	
Other Motor		100%	
Total Load =	103,928		58,928
Amps =	288.48		163.57
Note 1:			
* Per NEC 220.44, 1st 10,000VA at 100%,			
remainder over 10,000VA at 50%			

THESE DRAWINGS ARE "NOT APPROVED FOR CONSTRUCTION" SINCE THESE ARE BASED UPON ASSUMED CONDITIONS. THE CONTRACTOR SHALL NOT PROCEED WITH CONSTRUCTION UNTIL THE ASSUMED CONDITIONS ARE VALIDATED AND APPROVAL IS RECEIVED FROM THE CONTRACTING OFFICER.

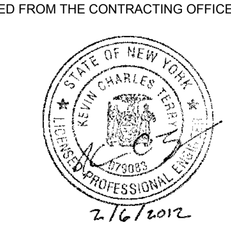

UNLESS OTHERWISE NOTED, LINEAR DIMENSIONS SHOWN ARE IN MILLIMETERS.

DESIGN COMPLETE SUBMITTAL

SYMB	DESCRIPTION	DATE	APR
FNL	DESIGN COMPLETE SUBMITTAL	02-06-12	KCT

DESIGNED BY: JAS
DATE: 02-06-2012
DRAWN BY: SES
SUBMITTED BY: TETRA TECH
CHECKED BY: RWR
FILE NO.: AF1202A-E613SC

TETRA TECH

US Army Corps of Engineers
Middle East District

COMMAND & CONTROL FACILITY
KANDAHAR AIR FIELD, AFGHANISTAN
COMMAND & CONTROL FACILITY
PANEL SCHEDULE – PP3

SHEET REFERENCE NUMBER:
A
E-613

LOCATION: COMM ROOM 129 — PANELBOARD CP1 — SURFACE MOUNTED — 10K AIC SYM. A.I.C. MIN. — THIS SECTION FEEDS ROW #1

– AMP. MAIN LUGS (OR) 350 AMP. MAIN BREAKER W/ 350 AMP. TRIP

CIRCUIT BREAKER TYPE 208/120 VOLTS 3 PHASE 4 WIRE 60 HZ 350 AMP. BUS

CKT. NO.	NO. POLES	TRIP AMPS	WIRE MM²	GND MM²	CONDUIT MM	LOAD SERVED	LOAD–V.A. A0	B0	C0	LOAD–V.A. A0	B0	C0	LOAD SERVED	CONDUIT MM	GND MM²	WIRE MM²	TRIP AMPS	NO. POLES	CKT. NO.
1	2	30	6	6	20	DATA RACK #1	2490			2490			DATA RACK #1	20	6	6	30	2	2
3	↓	↓	↓	↓	↓	↓		2490			2490		↓	↓	↓	↓	↓	↓	4
5	2	30	6	6	20	DATA RACK #2			2490			2490	DATA RACK #2	20	6	6	30	2	6
7	↓	↓	↓	↓	↓	↓	2490			2490			↓	↓	↓	↓	↓	↓	8
9	2	30	6	6	20	DATA RACK #3		2490			2490		DATA RACK #3	20	6	6	30	2	10
11	↓	↓	↓	↓	↓	↓			2490			2490	↓	↓	↓	↓	↓	↓	12
13	2	30	6	6	20	DATA RACK #4	2490			2490			DATA RACK #4	20	6	6	30	2	14
15	↓	↓	↓	↓	↓	↓		2490			2490		↓	↓	↓	↓	↓	↓	16
17	2	30	6	6	20	DATA RACK #5			2490			2490	DATA RACK #5	20	6	6	30	2	18
19	↓	↓	↓	↓	↓	↓	2490			2490			↓	↓	↓	↓	↓	↓	20
21	2	30	6	6	20	DATA RACK #6		2490			2490		DATA RACK #6	20	6	6	30	2	22
23	↓	↓	↓	↓	↓	↓			2490			2490	↓	↓	↓	↓	↓	↓	24
25	2	30	6	6	20	DATA RACK #7	2490			2490			DATA RACK #7	20	6	6	30	2	26
27	↓	↓	↓	↓	↓	↓		2490			2490		↓	↓	↓	↓	↓	↓	28
29	2	30	6	6	20	DATA RACK #8			2490			2490	DATA RACK #8	20	6	6	30	2	30
31	↓	↓	↓	↓	↓	↓	2490			2490			↓	↓	↓	↓	↓	↓	32
33	2	30	6	6	20	DATA RACK #9		2490			2490		DATA RACK #9	20	6	6	30	2	34
35	↓	↓	↓	↓	↓	↓			2490			2490	↓	↓	↓	↓	↓	↓	36
37	2	30	6	6	20	DATA RACK #10	2490			2490			DATA RACK #10	20	6	6	30	2	38
39	↓	↓	↓	↓	↓	↓		2490			2490		↓	↓	↓	↓	↓	↓	40
41	2	30	6	6	20	SPARE							SPARE	20	6	6	30	2	42
43	↓	↓	↓	↓	↓	↓							↓	↓	↓	↓	↓	↓	44
45	–	–	–	–	–	–		–			–		TVSS	–	–	–	***	3	46
47	–	–	–	–	–	–			–			–							48
49	1	20	4	4	16	SPARE	–			–			↓	↓	↓	↓	↓	↓	50
51	1	20	4	4	16	CONV RECEPT: RACK #1–#3		1200			1200		CONV RECEPT: RACKS #4–#6	16	4	4	20	1	52
53	1	20	4	4	16	CONV RECEPT: RACKS #7–#9			1200			1200	CONV RECEPT: RACK #10	16	4	4	20	1	54
							17430	19630	16140	17430	19630	16140							

*=GFI **=SHUNT TRIP

***=MANUFACTURER'S RECOMMENDATION

TOTAL CONN. LOAD PER PHASE (KVA): A0 34.9 B0 37.3 C0 32.3

TOTAL CONN. LOAD 104.4 KVA. – % DEMAND = ESTIMATED DEMAND LOAD 104.4 KVA SUPPLIED FROM: MSB (VIA T–CP1/2)

PANEL CP1	CONNECTED LOAD VA	DEMAND FACTOR	DEMAND LOAD VA
Lighting		125%	
Recept*	4800	Note 1	4800
HVAC		100%	
Other	99600	100%	99600
Large Motor		125%	
Other Motor		100%	
Total Load =	104,400		104,400
Amps =	289.79		289.79
Note 1:			
* Per NEC 220.44, 1st 10,000VA at 100%,			
remainder over 10,000VA at 50%			

LOCATION: COMM ROOM 209 — PANELBOARD CP2 — SURFACE MOUNTED — 10K AIC SYM. A.I.C. MIN. — THIS SECTION FEEDS ROW #1

– AMP. MAIN LUGS (OR) 350 AMP. MAIN BREAKER W/ 350 AMP. TRIP

CIRCUIT BREAKER TYPE 208/120 VOLTS 3 PHASE 4 WIRE 60 HZ 350 AMP. BUS

CKT. NO.	NO. POLES	TRIP AMPS	WIRE MM²	GND MM²	CONDUIT MM	LOAD SERVED	LOAD–V.A. A0	B0	C0	LOAD–V.A. A0	B0	C0	LOAD SERVED	CONDUIT MM	GND MM²	WIRE MM²	TRIP AMPS	NO. POLES	CKT. NO.
1	2	30	6	6	20	DATA RACK #1	2490			2490			DATA RACK #1	20	6	6	30	2	2
3	↓	↓	↓	↓	↓	↓		2490			2490		↓	↓	↓	↓	↓	↓	4
5	2	30	6	6	20	DATA RACK #2			2490			2490	DATA RACK #2	20	6	6	30	2	6
7	↓	↓	↓	↓	↓	↓	2490			2490			↓	↓	↓	↓	↓	↓	8
9	2	30	6	6	20	DATA RACK #3		2490			2490		DATA RACK #3	20	6	6	30	2	10
11	↓	↓	↓	↓	↓	↓			2490			2490	↓	↓	↓	↓	↓	↓	12
13	2	30	6	6	20	DATA RACK #4	2490			2490			DATA RACK #4	20	6	6	30	2	14
15	↓	↓	↓	↓	↓	↓		2490			2490		↓	↓	↓	↓	↓	↓	16
17	2	30	6	6	20	DATA RACK #5			2490			2490	DATA RACK #5	20	6	6	30	2	18
19	↓	↓	↓	↓	↓	↓	2490			2490			↓	↓	↓	↓	↓	↓	20
21	2	30	6	6	20	DATA RACK #6		2490			2490		DATA RACK #6	20	6	6	30	2	22
23	↓	↓	↓	↓	↓	↓			2490			2490	↓	↓	↓	↓	↓	↓	24
25	2	30	6	6	20	DATA RACK #7	2490			2490			DATA RACK #7	20	6	6	30	2	26
27	↓	↓	↓	↓	↓	↓		2490			2490		↓	↓	↓	↓	↓	↓	28
29	2	30	6	6	20	DATA RACK #8			2490			2490	DATA RACK #8	20	6	6	30	2	30
31	↓	↓	↓	↓	↓	↓	2490			2490			↓	↓	↓	↓	↓	↓	32
33	2	30	6	6	20	DATA RACK #9		2490			2490		DATA RACK #9	20	6	6	30	2	34
35	↓	↓	↓	↓	↓	↓			2490			2490	↓	↓	↓	↓	↓	↓	36
37	2	30	6	6	20	DATA RACK #10	2490			2490			DATA RACK #10	20	6	6	30	2	38
39	↓	↓	↓	↓	↓	↓		2490			2490		↓	↓	↓	↓	↓	↓	40
41	2	30	6	6	20	SPARE							SPARE	20	6	6	30	2	42
43	↓	↓	↓	↓	↓	↓							↓	↓	↓	↓	↓	↓	44
45	–	–	–	–	–	–		–			–		TVSS	–	–	–	***	3	46
47	–	–	–	–	–	–			–			–							48
49	1	20	4	4	16	SPARE	–			–			↓	↓	↓	↓	↓	↓	50
51	1	20	4	4	16	CONV RECEPT: RACK #1–#3		1200			1200		CONV RECEPT: RACKS #4–#6	16	4	4	20	1	52
53	1	20	4	4	16	CONV RECEPT: RACKS #7–#9			1200			1200	CONV RECEPT: RACK #10	16	4	4	20	1	54
							17430	18630	16140	17430	18630	16140							

*=GFI **=SHUNT TRIP

***=MANUFACTURER'S RECOMMENDATION

TOTAL CONN. LOAD PER PHASE (KVA): A0 34.9 B0 37.3 C0 32.3

TOTAL CONN. LOAD 104.4 KVA. – % DEMAND = ESTIMATED DEMAND LOAD 104.4 KVA SUPPLIED FROM: MSB (VIA T–CP1/2)

PANEL CP2	CONNECTED LOAD VA	DEMAND FACTOR	DEMAND LOAD VA
Lighting		125%	
Recept*	4,800	Note 1	4,800
HVAC		100%	
Other	99,600	100%	99,600
Large Motor		125%	
Other Motor		100%	
Total Load =	104,400		104,400
Amps =	290		290
Note 1:			
* Per NEC 220.44, 1st 10,000VA at 100%,			
remainder over 10,000VA at 50%			

THESE DRAWINGS ARE "NOT APPROVED FOR CONSTRUCTION" SINCE THESE ARE BASED UPON ASSUMED CONDITIONS. THE CONTRACTOR SHALL NOT PROCEED WITH CONSTRUCTION UNTIL THE ASSUMED CONDITIONS ARE VALIDATED AND APPROVAL IS RECEIVED FROM THE CONTRACTING OFFICER.

STATE OF NEW YORK — KEVIN CHARLES LEGRO — 073092 — LICENSED PROFESSIONAL ENGINEER

2/6/2012

UNLESS OTHERWISE NOTED, LINEAR DIMENSIONS SHOWN ARE IN MILLIMETERS.

DESIGN COMPLETE SUBMITTAL

FNL	DESIGN COMPLETE SUBMITTAL	02–06–12	KCT
SYMB	DESCRIPTION	DATE	APR

DESIGNED BY: JAS — DATE: 02–06–2012

DRAWN BY: SES — SUBMITTED BY: TETRA TECH

CHECKED BY: RWR — FILE NO.: AF1202A–E621SC

TETRA TECH

US Army Corps of Engineers Middle East District

COMMAND & CONTROL FACILITY
KANDAHAR AIR FIELD, AFGHANISTAN
COMMAND & CONTROL FACILITY
PANEL SCHEDULES – CP1 AND CP2

SHEET REFERENCE NUMBER:
A
E–621

W:\23308\127–23308–11004\CAD\MED Drawings\AF1202\AF1202A\Electrical\AF1202A–E621SC.dwg 3/7/2012 9:55:58 AM Jeffers, Scott

LOCATION:
ELEC ROOM 112

PANELBOARD HP1 (SECT-1) SURFACE MOUNTED 65K AIC SYM. A.I.C. MIN.
300 AMP. MAIN LUGS (OR) – AMP. MAIN BREAKER W/ – AMP. TRIP
CIRCUIT BREAKER TYPE 480/277 VOLTS 3 PHASE 4 WIRE 60 HZ 300 AMP. BUS

CKT. NO.	NO. POLES	TRIP AMPS	WIRE MM²	GND MM²	CONDUIT MM	LOAD SERVED	LOAD-V.A. A0	LOAD-V.A. B0	LOAD-V.A. C0	LOAD-V.A. A0	LOAD-V.A. B0	LOAD-V.A. C0	LOAD SERVED	CONDUIT MM	GND MM²	WIRE MM²	TRIP AMPS	NO. POLES	CKT. NO.
1	1	15	4	4	16	RHC-C1	3000			3000			RHC-C10	16	4	4	15	1	2
3	1	15	4	4	16	RHC-C11		3000			3000		RHC-C33	16	4	4	15	1	4
5	1	15	4	4	16	RHC-C34			3000			3000	RHC-C35	16	4	4	15	1	6
7	1	15	4	4	16	RHC-C12	2500			2500			RHC-C13	16	4	4	15	1	8
9	1	15	4	4	16	RHC-C4, RHC-C29		2500			2500		RHC-C5, RHC-C27	16	4	4	15	1	10
11	1	15	4	4	16	RHC-C6			2000			2000	RHC-C7	16	4	4	15	1	12
13	1	15	4	4	16	RHC-C8	2000			2000			RHC-C9	16	4	4	15	1	14
15	1	15	4	4	16	RHC-C24		2000			3000		RHC-C2, RHC-C3	16	4	4	15	1	16
17	1	15	4	4	16	RHC-C26			1000			2000	RHC-C30, RHC-C31	16	4	4	15	1	18
19	1	15	4	4	16	RHC-C25, RHC-C28, RHC-C32	2000			–			SPARE	–	–	–	15	1	20
21	1	15	–	–	–	SPARE		–			–		SPARE	–	–	–	15	1	22
23	1	15	–	–	–	SPARE			–			–	SPARE	–	–	–	15	1	24
25	–	–	–	–	–	–	–			–			–	–	–	–	–	–	26
27	–	–	–	–	–	–		–			–		–	–	–	–	–	–	28
29	–	–	–	–	–	–			–			–	–	–	–	–	–	–	30
31	–	–	–	–	–	–	–			–			–	–	–	–	–	–	32
33	–	–	–	–	–	–		–			–		–	–	–	–	–	–	34
35	–	–	–	–	–	–			–			–	–	–	–	–	–	–	36
37	–	–	–	–	–	–	–			–			–	–	–	–	–	–	38
39	–	–	–	–	–	–		–			–		–	–	–	–	–	–	40
41	–	–	–	–	–	–			–			–	–	–	–	–	–	–	42
43	3	20	4	4	16	RHC-C15	4000			–			–	–	–	–	–	–	44
45								4000			–		–	–	–	–	–	–	46
47									4000			–	–	–	–	–	–	–	48
49	3	20	4	4	16	RHC-C16	4000			–			–	–	–	–	–	–	50
51								4000			–		–	–	–	–	–	–	52
53									4000			–	–	–	–	–	–	–	54
							17500	15500	14000	5500	8500	7000							

*=GFI **=SHUNT TRIP

TOTAL CONN. LOAD 157.3 KVA. – % DEMAND = ESTIMATED DEMAND LOAD 158 KVA

TOTAL CONN. LOAD PER PHASE (KVA): A0 51.9 B0 55.9 C0 49.4
SUPPLIED FROM: MSB

LOCATION:
ELEC ROOM 112

PANELBOARD HP1 (SECT-2) SURFACE MOUNTED 65K AIC SYM. A.I.C. MIN.
300 AMP. MAIN LUGS (OR) --- AMP. MAIN BREAKER W/ --- AMP. TRIP
CIRCUIT BREAKER TYPE 480/277 VOLTS 3 PHASE 4 WIRE 60 HZ 300 AMP. BUS

CKT. NO.	NO. POLES	TRIP AMPS	WIRE MM²	GND MM²	CONDUIT MM	LOAD SERVED	LOAD-V.A. A0	LOAD-V.A. B0	LOAD-V.A. C0	LOAD-V.A. A0	LOAD-V.A. B0	LOAD-V.A. C0	LOAD SERVED	CONDUIT MM	GND MM²	WIRE MM²	TRIP AMPS	NO. POLES	CKT. NO.
55	1	15	4	4	16	RHC-C37	3000			3000			RHC-C38	16	4	4	15	1	56
57	1	15	4	4	16	RHC-C39		3000			3000		RHC-C46	16	4	4	15	1	58
59	1	15	4	4	16	RHC-C47			3000			3000	RHC-C48	16	4	4	15	1	60
61	1	15	4	4	16	RHC-C49	3000			3000			RHC-C50	16	4	4	15	1	62
63	1	15	4	4	16	RHC-C51		3000			3000		RHC-C52	16	4	4	15	1	64
65	1	15	4	4	16	RHC-C53			3000			2500	RHC-C40,RHC-C62	16	4	4	15	1	66
67	1	15	4	4	16	RHC-C45	2000			2000			RHC-C54	16	4	4	15	1	68
69	1	15	4	4	16	RHC-C55, RHC-C61		2500			2000		RHC-C56	16	4	4	15	1	70
71	1	15	4	4	16	RHC-C57, RHC-C64			2500			2500	RHC-C44, RHC-C58, RHC-C60	16	4	4	15	1	72
73	1	15	4	4	16	RHC-C59, RHC-C63	1500			3500			RHC-C42	16	4	4	20	1	74
75	1	20	4	4	16	RHC-C43		3500			4000		RHC-C36	16	4	4	20	1	76
77	1	20	4	4	16	RHC-C41			4000			–	SPARE	–	–	–	15	1	78
79	1	15	–	–	–	SPARE	–			–			SPARE	–	–	–	15	1	80
81	1	15	–	–	–	SPARE		–			–		SPARE	–	–	–	15	1	82
83	–	–	–	–	–	–			–			–	–	–	–	–	–	–	84
85	3	20	4	4	16	GENSET BLOCK HEATER	1000			–			–	–	–	–	–	–	86
87								1000			–		–	–	–	–	–	–	88
89									1000			–	–	–	–	–	–	–	90
91	3	15	4	4	16	JOCKEY PUMP	943			–			–	–	–	–	–	–	92
93								943			–		–	–	–	–	–	–	94
95									943			–	–	–	–	–	–	–	96
97	3	15	4	4	16	EWH-1	3000			–			–	–	–	–	–	–	98
99								3000			–		–	–	–	–	–	–	100
101									3000			–	–	–	–	–	–	–	102
103	3	15	4	4	16	EWH-2	3000			–			TVSS	–	–	–	***	3	104
105								3000			–								106
107									3000			–							108
							16443	18943	19443	11500	12000	8000							

*=GFI **=SHUNT TRIP
***=MANUFACTURER'S RECOMMENDATION

TOTAL CONN. LOAD 89.3 KVA. – % DEMAND = ESTIMATED DEMAND LOAD – KVA

TOTAL CONN. LOAD PER PHASE (KVA): A0 28.9 B0 31.9 C0 28.4
SUPPLIED FROM: SECTION 1

PANEL HP1	CONNECTED LOAD VA	DEMAND FACTOR	DEMAND LOAD VA
Lighting		125%	
Recept*		Note 1	
HVAC	133,500	100%	133,500
Other	21,000	100%	21,000
Large Motor	2,829	125%	3,536
Other Motor		100%	
Total Load =	157,329		158,036
Amps =	189		190
Note 1:			
* Per NEC 220.44, 1st 10,000VA at 100%,			
remainder over 10,000VA at 50%			

THESE DRAWINGS ARE "NOT APPROVED FOR CONSTRUCTION" SINCE THESE ARE BASED UPON ASSUMED CONDITIONS. THE CONTRACTOR SHALL NOT PROCEED WITH CONSTRUCTION UNTIL THE ASSUMED CONDITIONS ARE VALIDATED AND APPROVAL IS RECEIVED FROM THE CONTRACTING OFFICER.

STATE OF NEW YORK · KEVIN CHARLES LEGRI · 079092 · LICENSED PROFESSIONAL ENGINEER
2/6/2012

UNLESS OTHERWISE NOTED, LINEAR DIMENSIONS SHOWN ARE IN MILLIMETERS.

DESIGN COMPLETE SUBMITTAL

SYMB	DESCRIPTION	DATE	APR
FNL	DESIGN COMPLETE SUBMITTAL	02-06-12	KCT

DESIGNED BY: JAS
DATE: 02-06-2012
DRAWN BY: SES
SUBMITTED BY: TETRA TECH
CHECKED BY: RWR
FILE NO.: AF1202A-E631SC

TETRA TECH

US Army Corps of Engineers
Middle East District

COMMAND & CONTROL FACILITY
KANDAHAR AIR FIELD, AFGHANISTAN
COMMAND & CONTROL FACILITY
PANEL SCHEDULE – HP1

SHEET REFERENCE NUMBER:
A
E-631

W:\23308\127-23308-11004\CAD\MED Drawings\AF1202\AF1202A\Electrical\AF1202A-E631SC.dwg 3/7/2012 9:56:33 AM Jeffers, Scott

LOCATION: ELEC ROOM 112

PANELBOARD LP1 SURFACE MOUNTED 65K AIC SYM. A.I.C. MIN.
60 AMP. MAIN LUGS (OR) – AMP. MAIN BREAKER W/ – AMP. TRIP
CIRCUIT BREAKER TYPE 480/277 VOLTS 3 PHASE 4 WIRE 60 HZ 100 AMP. BUS

CKT. NO.	NO. POLES	TRIP AMPS	WIRE MM²	GND MM²	CONDUIT MM	LOAD SERVED	LOAD–V.A. A0	B0	C0	LOAD–V.A. A0	B0	C0	LOAD SERVED	CONDUIT MM	GND MM²	WIRE MM²	TRIP AMPS	NO. POLES	CKT. NO.
1	1	20	4	4	16	LTG: EXITS (GROUND FLOOR)	500			1000			LTG: EXTERIOR	16	4	4	20	1	2
3	1	20	4	4	16	LTG: CORR.123,124,130,132, ECP 125,126		1120			1700		LTG: 101–106,127,128	16	4	4	20	1	4
5	1	20	4	4	16	LTG: 116			1100			1340	LTG: 111,112,129	16	4	4	20	1	6
7	1	20	4	4	16	LTG: 108–110,114,115,117–121,131	2140			–			–	–	–	–	–	–	8
9	1	20	4	4	16	LTG: 107		3070			–		–	–	–	–	–	–	10
11	1	20	4	4	16	LTG: 107			2300			–	–	–	–	–	–	–	12
13	–	–	–	–	–	–	–			–			–	–	–	–	–	–	14
15	–	–	–	–	–	–		–			–		–	–	–	–	–	–	16
17	–	–	–	–	–	–			–			–	–	–	–	–	–	–	18
19	–	–	–	–	–	–	–			–			–	–	–	–	–	–	20
21	–	–	–	–	–	–		–			–		–	–	–	–	–	–	22
23	–	–	–	–	–	–			–			–	–	–	–	–	–	–	24
25	–	–	–	–	–	–	–						TVSS	–	–	–	***	3	26
27	–	–	–	–	–	–		–											28
29	–	–	–	–	–	–			–										30
							2640	4190	3400	1000	1700	1340							

*=GFI **=SHUNT TRIP

TOTAL CONN. LOAD PER PHASE (KVA): A0 3.6 B0 5.9 C0 4.7

TOTAL CONN. LOAD 14.2 KVA. – % DEMAND = ESTIMATED DEMAND LOAD 17.8 KVA SUPPLIED FROM: MSB

PANEL LP1	CONNECTED LOAD VA	DEMAND FACTOR	DEMAND LOAD VA
Lighting	14,266	125%	17,833
Recept*		Note 1	
HVAC		100%	
Other		100%	
Large Motor		125%	
Other Motor		100%	
Total Load =	14,266		17,833
Amps =	17		21

Note 1:
* Per NEC 220.44, 1st 10,000VA at 100%,
remainder over 10,000VA at 50%

LOCATION: ELEC ROOM 221

PANELBOARD LP2 SURFACE MOUNTED 65K AIC SYM. A.I.C. MIN.
– AMP. MAIN LUGS (OR) 60 AMP. MAIN BREAKER W/ 60 AMP. TRIP
CIRCUIT BREAKER TYPE 480/277 VOLTS 3 PHASE 4 WIRE 60 HZ 100 AMP. BUS

CKT. NO.	NO. POLES	TRIP AMPS	WIRE MM²	GND MM²	CONDUIT MM	LOAD SERVED	LOAD–V.A. A0	B0	C0	LOAD–V.A. A0	B0	C0	LOAD SERVED	CONDUIT MM	GND MM²	WIRE MM²	TRIP AMPS	NO. POLES	CKT. NO.
1	1	20	4	4	16	LTG: EXITS (FIRST FLOOR)	500			–			SPARE	16	4	4	20	1	2
3	1	20	4	4	16	LTG: CORR.218–220,ECP 222,223		980			2100		LTG: 208	16	4	4	20	1	4
5	1	20	4	4	16	LTG: 203,205,206,207			1400			2100	LTG: 204,209,210,221	16	4	4	20	1	6
7	1	20	4	4	16	LTG: 201,202,213,215,216,217	1750			–			–	–	–	–	–	–	8
9	–	–	–	–	–	–		–			–		–	–	–	–	–	–	10
11	–	–	–	–	–	–			–			–	–	–	–	–	–	–	12
13	–	–	–	–	–	–	–			–			–	–	–	–	–	–	14
15	–	–	–	–	–	–		–			–		–	–	–	–	–	–	16
17	–	–	–	–	–	–			–			–	–	–	–	–	–	–	18
19	–	–	–	–	–	–	–			–			–	–	–	–	–	–	20
21	–	–	–	–	–	–		–			–		–	–	–	–	–	–	22
23	–	–	–	–	–	–			–			–	–	–	–	–	–	–	24
25	–	–	–	–	–	–	–						TVSS	–	–	–	***	3	26
27	–	–	–	–	–	–		–											28
29	–	–	–	–	–	–			–										30
							2250	980	1400	–	2100	2100							

*=GFI **=SHUNT TRIP

TOTAL CONN. LOAD PER PHASE (KVA): A0 2.3 B0 3.1 C0 3.5

TOTAL CONN. LOAD 8.8 KVA. – % DEMAND = ESTIMATED DEMAND LOAD 11.1 KVA SUPPLIED FROM: MSB

PANEL LP2	CONNECTED LOAD VA	DEMAND FACTOR	DEMAND LOAD VA
Lighting	8,830	125%	11,038
Recept		Note 1	
HVAC		100%	
Other		100%	
Large Motor		125%	
Other Motor		100%	
Total Load =	8,830		11,038
Amps =	11		13

Note 1:
* Per NEC 220.44, 1st 10,000VA at 100%,
remainder over 10,000VA at 50%

THESE DRAWINGS ARE "NOT APPROVED FOR CONSTRUCTION" SINCE THESE ARE BASED UPON ASSUMED CONDITIONS. THE CONTRACTOR SHALL NOT PROCEED WITH CONSTRUCTION UNTIL THE ASSUMED CONDITIONS ARE VALIDATED AND APPROVAL IS RECEIVED FROM THE CONTRACTING OFFICER.

STATE OF NEW YORK KEVIN CHARLES TERRY 073092 LICENSED PROFESSIONAL ENGINEER

2/6/2012

UNLESS OTHERWISE NOTED, LINEAR DIMENSIONS SHOWN ARE IN MILLIMETERS.

DESIGN COMPLETE SUBMITTAL

SYMB	DESCRIPTION	DATE	APR
FNL	DESIGN COMPLETE SUBMITTAL	02–06–12	KCT

DESIGNED BY: JAS
DRAWN BY: SES
CHECKED BY: RWR
DATE: 02–06–2012
SUBMITTED BY: TETRA TECH
FILE NO.: AF1202A–E641SC

TETRA TECH

US Army Corps of Engineers Middle East District

COMMAND & CONTROL FACILITY
KANDAHAR AIR FIELD, AFGHANISTAN
COMMAND & CONTROL FACILITY
PANEL SCHEDULES – LP1 AND LP2

SHEET REFERENCE NUMBER:
A
E–641

W:\23308\127–23308–11004\CAD\MED Drawings\AF1202\AF1202A\Electrical\AF1202A–E641SC.dwg 3/7/2012 9:57:01 AM Jeffers, Scott

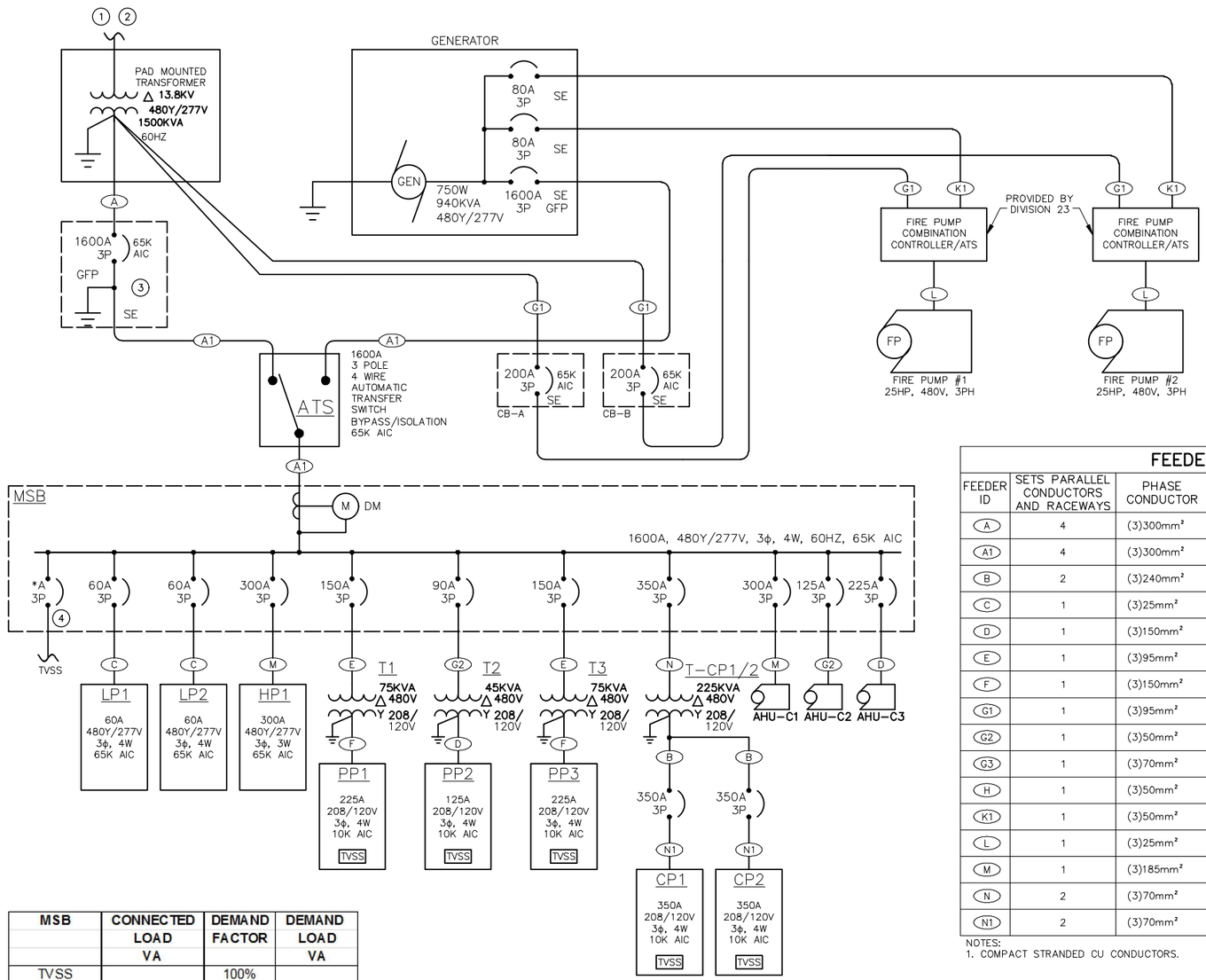

ONE-LINE DIAGRAM

N.T.S.

MSB	CONNECTED LOAD VA	DEMAND FACTOR	DEMAND LOAD VA
TVSS		100%	
LP1	14,266	Note A	17,833
LP2	8,830	Note A	11,038
HP1	157,329	Note A	158,036
PP1	112,217	Note A	64,909
PP2	51,016	Note A	32,016
PP3	103,928	Note A	58,928
CP1/CP2	208,800	Note A	208,800
AHU-C1	213,372	Note B	213,372
AHU-C2	92,909	Note B	92,909
AHU-C3	173,840	Note B	173,840
Total Load =	1,136,507		1,031,680
Amps =	3,155		1,241

Note A: See Panel Schedule for Demand Factors
Note B: Demand factor was sum of all motors plus 125% of the largest motor for each AHU

KEYED NOTES:

1. CONNECTION TO BASE POWER
2. COORDINATE PRIMARY VOLTAGE WITH CONTRACTING OFFICER.
3. MAIN BONDING JUMPER LOCATED AT SERVICE ENTRANCE CIRCUIT BREAKER.
4. SIZE WIRE AND CIRCUIT BREAKER PER TVSS MANUFACTURER'S REQUIREMENTS.

FEEDER SIZE TABLE

FEEDER ID	SETS PARALLEL CONDUCTORS AND RACEWAYS	PHASE CONDUCTOR	NEUTRAL	GROUND	RACEWAY SIZE	NOTES
A	4	(3)300mm²	(1)300mm²	–	100mm PVC	1
A1	4	(3)300mm²	(1)300mm²	(1)120mm²	100mm PVC	1
B	2	(3)240mm²	(2)240mm²	(1)70mm²	90mm IMC	1
C	1	(3)25mm²	(1)25mm²	(1)10mm²	32mm IMC	--
D	1	(3)150mm²	–	(1)35mm²	64mm IMC	1
E	1	(3)95mm²	–	(1)35mm²	50mm IMC	--
F	1	(3)150mm²	(1)150mm²	(1)50mm²	75mm IMC	1
G1	1	(3)95mm²	–	(1)16mm²	64mm RGS	1
G2	1	(3)50mm²	–	(1)10mm²	38mm IMC	--
G3	1	(3)70mm²	–	(1)16mm²	50mm IMC	--
H	1	(3)50mm²	(2)150mm²	(1)35mm²	50mm IMC	200% N.
K1	1	(3)50mm²	–	(1)10mm²	38mm RGS	--
L	1	(3)25mm²	–	(1)16mm²	32mm RGS	--
M	1	(3)185mm²	–	(1)25mm²	75mm IMC	1
N	2	(3)70mm²	–	(1)35mm²	50mm IMC	1
N1	2	(3)70mm²	(2)70mm²	–	50mm IMC	1

NOTES:
1. COMPACT STRANDED CU CONDUCTORS.

THESE DRAWINGS ARE "NOT APPROVED FOR CONSTRUCTION" SINCE THESE ARE BASED UPON ASSUMED CONDITIONS. THE CONTRACTOR SHALL NOT PROCEED WITH CONSTRUCTION UNTIL THE ASSUMED CONDITIONS ARE VALIDATED AND APPROVAL IS RECEIVED FROM THE CONTRACTING OFFICER.

STATE OF NEW YORK · KEVIN CHARLES LEE · 079082 · LICENSED PROFESSIONAL ENGINEER
2/6/2012

UNLESS OTHERWISE NOTED, LINEAR DIMENSIONS SHOWN ARE IN MILLIMETERS.

DESIGN COMPLETE SUBMITTAL

SYMB	DESCRIPTION	DATE	APR
FNL	DESIGN COMPLETE SUBMITTAL	02-06-12	KCT

DESIGNED BY: JAS
DATE: 02-06-2012
DRAWN BY: SES
SUBMITTED BY: TETRA TECH
CHECKED BY: RWR
FILE NO.: AF1202A-E700DI

TETRA TECH

US Army Corps of Engineers
Middle East District

COMMAND & CONTROL FACILITY
KANDAHAR AIR FIELD, AFGHANISTAN
COMMAND & CONTROL FACILITY
ONE-LINE DIAGRAM

SHEET REFERENCE NUMBER:
A
E-700

W:\23308\127-23308-11004\CAD\WED Drawings\AF1202\AF1202A\Electrical\AF1202A-E700DI.dwg 3/7/2012 9:57:25 AM Jeffers, Scott

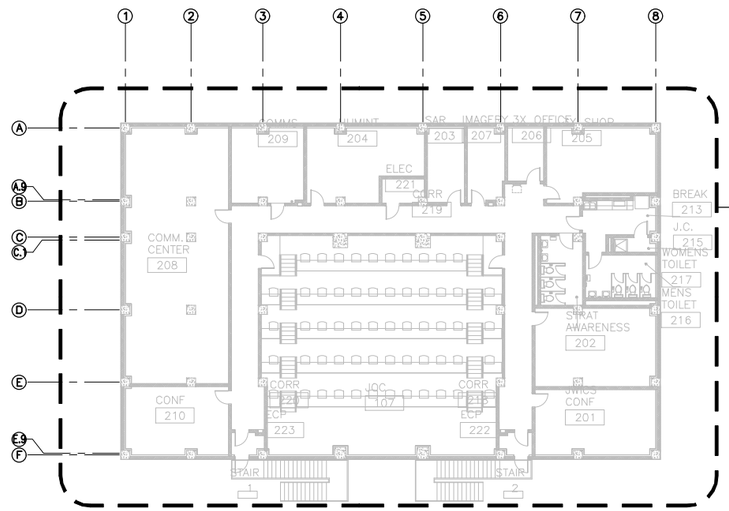

FIRST FLOOR PLAN
SCALE 1:200

1 FIRST FLOOR PLAN T-110 T-112

2 T-110 T-110

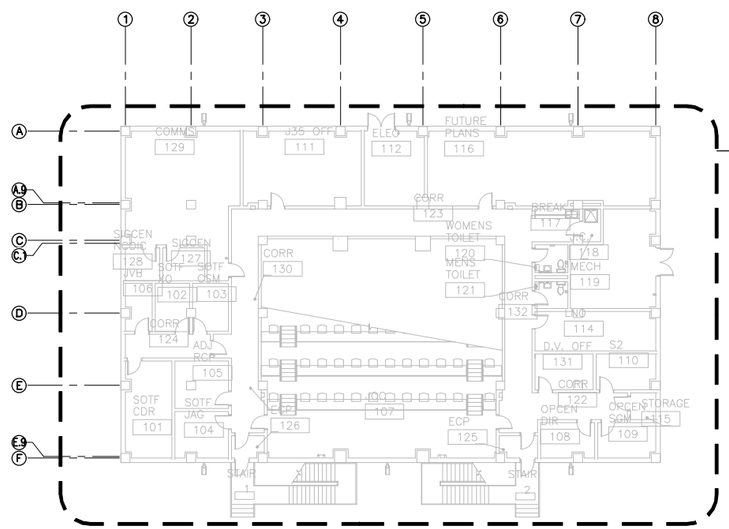

GROUND FLOOR PLAN
SCALE 1:200

1 GROUND FLOOR PLAN T-110 T-111

1 T-110 T-110

5 0 5 10 15
1:200

THESE DRAWINGS ARE "NOT APPROVED FOR CONSTRUCTION" SINCE THESE ARE BASED UPON ASSUMED CONDITIONS. THE CONTRACTOR SHALL NOT PROCEED WITH CONSTRUCTION UNTIL THE ASSUMED CONDITIONS ARE VALIDATED AND APPROVAL IS RECEIVED FROM THE CONTRACTING OFFICER.

STATE OF NEW YORK · KEVIN CHARLES TERRY · 073082 · LICENSED PROFESSIONAL ENGINEER

2/6/2012

UNLESS OTHERWISE NOTED, LINEAR DIMENSIONS SHOWN ARE IN MILLIMETERS.

DESIGN COMPLETE SUBMITTAL

SYMB	DESCRIPTION	DATE	APR
FNL	DESIGN COMPLETE SUBMITTAL	02-06-12	KCT

DESIGNED BY: RPR
DATE: 02-06-2012
DRAWN BY: SES
SUBMITTED BY: TETRA TECH
CHECKED BY: RSM
FILE NO.: AF1202A-T110PN

TETRA TECH

US Army Corps of Engineers
Middle East District

COMMAND & CONTROL FACILITY
KANDAHAR AIR FIELD, AFGHANISTAN
COMMAND & CONTROL FACILITY
KEY PLAN

SHEET REFERENCE NUMBER:
A
T-110

W:\23308\127-23308-11004\CAD\MED Drawings\AF1202\AF1202A\Telecommunications\AF1202A-T110PN.dwg 3/7/2012 9:57:51 AM Jeffers, Scott

GENERAL NOTES:

1. PROVIDE A NONCONDUCTIVE (PVC) BREAK AT ALL CONDUIT PENETRATIONS OF WALLS.

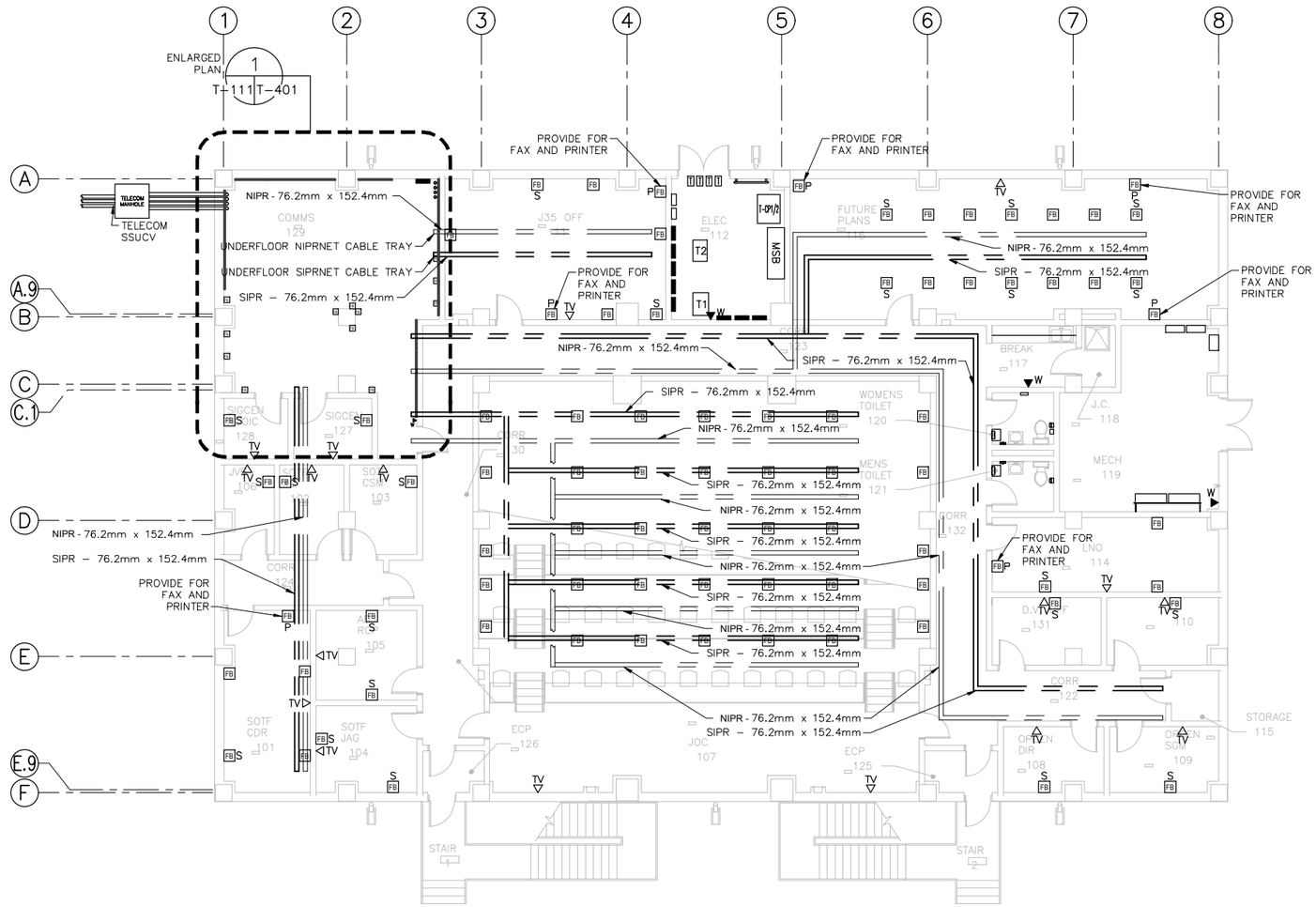

GROUND FLOOR TELECOM PLAN (1 / T-110 | T-111)

SCALE 1:100

1 0 1 2 3 4
1:50

1 0 1 2 3 4 5 6 7 8 9
1:100

THESE DRAWINGS ARE "NOT APPROVED FOR CONSTRUCTION" SINCE THESE ARE BASED UPON ASSUMED CONDITIONS. THE CONTRACTOR SHALL NOT PROCEED WITH CONSTRUCTION UNTIL THE ASSUMED CONDITIONS ARE VALIDATED AND APPROVAL IS RECEIVED FROM THE CONTRACTING OFFICER.

STATE OF NEW YORK · KEVIN CHARLES TERRY · 073092 · LICENSED PROFESSIONAL ENGINEER

2/6/2012

UNLESS OTHERWISE NOTED, LINEAR DIMENSIONS SHOWN ARE IN MILLIMETERS.

DESIGN COMPLETE SUBMITTAL

SYMB	DESCRIPTION	DATE	
FNL	DESIGN COMPLETE SUBMITTAL	02-06-12	KCT

DESIGNED BY: RPR
DATE: 02-06-2012
DRAWN BY: SES
SUBMITTED BY: TETRA TECH
CHECKED BY: RSM
FILE NO.: AF1202A-T111PN

TETRA TECH

US Army Corps of Engineers
Middle East District

COMMAND & CONTROL FACILITY
KANDAHAR AIR FIELD, AFGHANISTAN
COMMAND & CONTROL FACILITY
GROUND FLOOR TELECOM PLAN

SHEET REFERENCE NUMBER:
A
T-111

W:\23308\127-23308-11004\CAD\MED Drawings\AF1202\AF1202A\Telecommunications\AF1202A-T111PN.dwg 3/7/2012 9:58:13 AM Jeffers, Scott

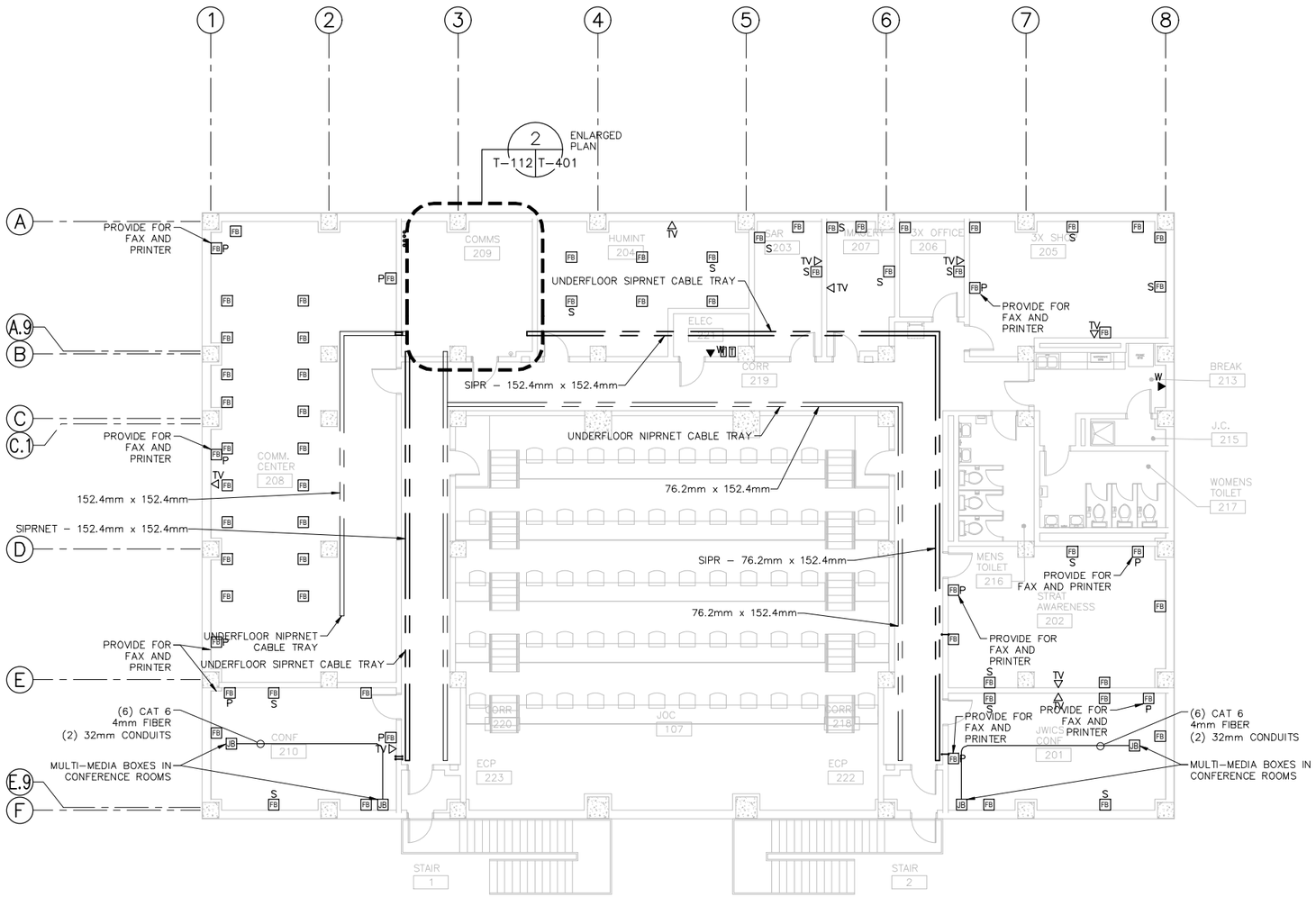

FIRST FLOOR TELECOM PLAN
SCALE 1:100
1
T-110 T-112

1 0 1 2 3 4
1:50
1 0 1 2 3 4 5 6 7 8 9
1:100

THESE DRAWINGS ARE "NOT APPROVED FOR CONSTRUCTION" SINCE THESE ARE BASED UPON ASSUMED CONDITIONS. THE CONTRACTOR SHALL NOT PROCEED WITH CONSTRUCTION UNTIL THE ASSUMED CONDITIONS ARE VALIDATED AND APPROVAL IS RECEIVED FROM THE CONTRACTING OFFICER.

STATE OF NEW YORK · KEVIN CHARLES TEFT · 079082 · LICENSED PROFESSIONAL ENGINEER
2/6/2012

UNLESS OTHERWISE NOTED, LINEAR DIMENSIONS SHOWN ARE IN MILLIMETERS.

DESIGN COMPLETE SUBMITTAL

FNL	DESIGN COMPLETE SUBMITTAL	02-06-12	KCT
SMB	DESCRIPTION	DATE	APR

DESIGNED BY: RPR
DATE: 02-06-2012
DRAWN BY: SES
SUBMITTED BY: TETRA TECH
CHECKED BY: RSM
FILE NO.: AF1202A-T112PN

TETRA TECH

US Army Corps of Engineers
Middle East District

COMMAND & CONTROL FACILITY
KANDAHAR AIR FIELD, AFGHANISTAN
COMMAND & CONTROL FACILITY
FIRST FLOOR TELECOM PLAN

SHEET REFERENCE NUMBER:
A
T-112

W:\23308\127-23308-11004\CAD\MED Drawings\AF1202\AF1202A\Telecommunications\AF1202A-T112PN.dwg 3/7/2012 9:58:36 AM Jeffers, Scott

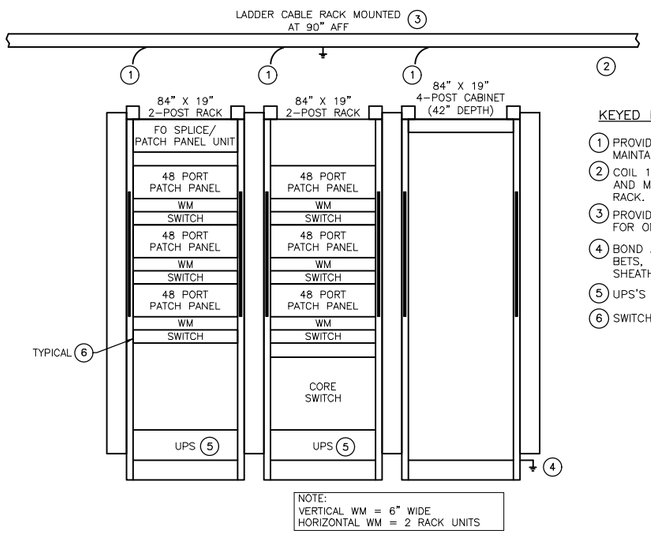

RACK ELEVATION – TYPICAL FOR COMM ROOMS

N.T.S.

KEYED NOTES:

1. PROVIDE LADDER CABLE RACK WATERFALLS TO MAINTAIN CABLE BEND RADIUS.
2. COIL 120" OF SLACK ON FIBER OPTIC CABLES AND MOUNT ON THE BOTTOM OF LADDER CABLE RACK.
3. PROVIDE 6" CABLE RETAINING POST AS CALLED FOR ON CABLE LADDER RACK DETAIL.
4. BOND AND GROUND ALL CONDUITS, CABLE TRAYS BETS, RACKS, CABINETS AND METALLIC CABLE SHEATHS TO TMGB OR TGB.
5. UPS'S ARE GFGI.
6. SWITCHES ARE GFGI.

THESE DRAWINGS ARE "NOT APPROVED FOR CONSTRUCTION" SINCE THESE ARE BASED UPON ASSUMED CONDITIONS. THE CONTRACTOR SHALL NOT PROCEED WITH CONSTRUCTION UNTIL THE ASSUMED CONDITIONS ARE VALIDATED AND APPROVAL IS RECEIVED FROM THE CONTRACTING OFFICER.

STATE OF NEW YORK · KEVIN CHARLES TERRY · 079092 · LICENSED PROFESSIONAL ENGINEER

2/6/2012

UNLESS OTHERWISE NOTED, LINEAR DIMENSIONS SHOWN ARE IN MILLIMETERS.

DESIGN COMPLETE SUBMITTAL

SYMB	DESCRIPTION	DATE	APR
FNL	DESIGN COMPLETE SUBMITTAL	02-06-12	KCT

DESIGNED BY: RPR
DATE: 02-06-2012
DRAWN BY: SES
SUBMITTED BY: TETRA TECH
CHECKED BY: RSM
FILE NO.: AF1202A-T201EL

TETRA TECH

US Army Corps of Engineers
Middle East District

COMMAND & CONTROL FACILITY
KANDAHAR AIR FIELD, AFGHANISTAN
COMMAND & CONTROL FACILITY
TELECOM RACK ELEVATIONS

SHEET REFERENCE NUMBER:
A
T-201

W:\23308\127-23308-11004\CAD\MED Drawings\AF1202\AF1202A\Telecommunications\AF1202A-T201EL.dwg 3/7/2012 9:59:00 AM Jeffers, Scott

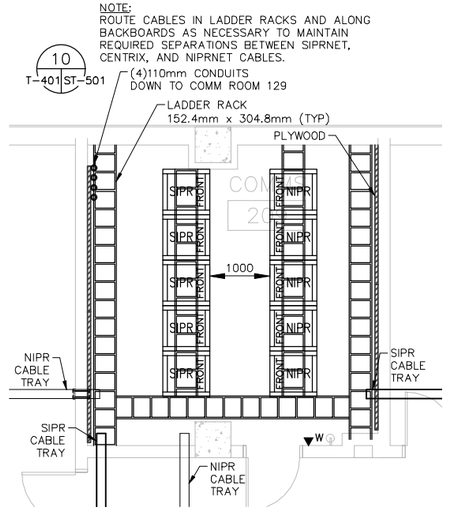

ENLARGED PLAN – COMM ROOM 209 (2 / T-112 | T-401)
SCALE 1:50

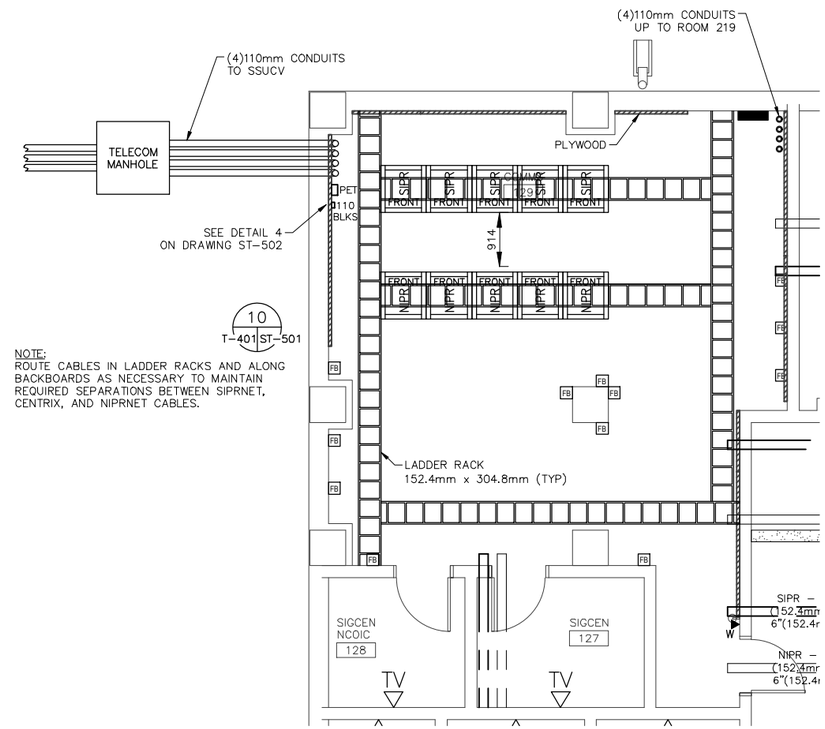

ENLARGED PLAN – COMM ROOM 129 (1 / T-111 | T-401)
SCALE 1:50

1 0 1 2 3 4
1:50

THESE DRAWINGS ARE "NOT APPROVED FOR CONSTRUCTION" SINCE THESE ARE BASED UPON ASSUMED CONDITIONS. THE CONTRACTOR SHALL NOT PROCEED WITH CONSTRUCTION UNTIL THE ASSUMED CONDITIONS ARE VALIDATED AND APPROVAL IS RECEIVED FROM THE CONTRACTING OFFICER.

STATE OF NEW YORK · KEVIN CHARLES TERRY · 079082 · LICENSED PROFESSIONAL ENGINEER
2/6/2012

UNLESS OTHERWISE NOTED, LINEAR DIMENSIONS SHOWN ARE IN MILLIMETERS.

DESIGN COMPLETE SUBMITTAL

FNL	DESIGN COMPLETE SUBMITTAL	02-06-12	KCT
SYMB	DESCRIPTION	DATE	APR

DESIGNED BY: RPR
DATE: 02-06-2012
DRAWN BY: SES
SUBMITTED BY: TETRA TECH
CHECKED BY: RSM
FILE NO.: AF1202A-T401LS

TETRA TECH

US Army Corps of Engineers
Middle East District

COMMAND & CONTROL FACILITY
KANDAHAR AIR FIELD, AFGHANISTAN
COMMAND & CONTROL FACILITY
TELECOM ENLARGED PLANS

SHEET REFERENCE NUMBER:
A
T-401

W:\23308\127-23308-11004\CAD\MED Drawings\AF1202\AF1202A\Telecommunications\AF1202A-T401LS.dwg 3/7/2012 9:59:31 AM Jeffers, Scott

GENERAL:

1. THE ELEVATIONS SHOWN ON THE STRUCTURAL DRAWINGS ARE FOR REFERENCE ONLY. FINISHED FLOOR ELEVATION IS ASSUMED. SEE ARCHITECTURAL DRAWING FOR ELEVATIONS. ALL LINEAR DIMENSIONS ARE MILLIMETERS UNLESS NOTED OTHERWISE (U.N.O.).
2. ALL DIMENSIONS AND CONDITIONS MUST BE VERIFIED BY THE CONTRACTOR IN THE FIELD AND ANY DISCREPANCIES SHALL BE BROUGHT TO THE ATTENTION OF THE CONTRACTING OFFICER BEFORE PROCEEDING WITH THE AFFECTED PORTION OF THE WORK.
3. THE CONTRACTOR SHALL INFORM THE CONTRACTING OFFICER OF ALL DISCREPANCIES BETWEEN DRAWINGS OF DIFFERENT TRADES, PRIOR TO INITIATION OF ANY WORK.
4. OPENINGS IN FLOORS, ROOFS OR WALLS LESS THAN 300mm ARE TYPICALLY NOT SHOWN ON THE DRAWINGS. OPENINGS SHOWN ON THE STRUCTURAL DRAWINGS ARE FOR REFERENCE ONLY. THE CONTRACTOR SHALL COORDINATE ALL CHASES, INSERTS, OPENINGS, AND ADDITIONAL WORK SHOWN THE ARCHITECTURAL, PLUMBING, ELECTRICAL AND COMMUNICATION DRAWINGS.
5. THE CONTRACTOR SHALL IMMEDIATELY NOTIFY THE CONTRACTING OFFICER WHEN, IN THE COURSE OF CONSTRUCTION, CONDITIONS ARE UNCOVERED WHICH ARE UNANTICIPATED OR OTHERWISE APPEAR TO PRESENT A DANGEROUS CONDITION.
6. STRUCTURAL DRAWINGS SHALL BE USED IN CONJUNCTION WITH CIVIL, ARCHITECTURAL, PLUMBING, MECHANICAL DESIGN AND SHOP DRAWINGS.
7. SECTIONS AND DETAILS SHOWN ON ANY DRAWING ARE TO BE CONSIDERED TYPICAL FOR ALL SIMILAR CONDITIONS.
8. WORK NOT INDICATED AS A PART OF THE DRAWINGS BUT REASONABLY IMPLIED TO BE SIMILAR TO THAT SHOWN AT CORRESPONDING LOCATIONS, SHALL BE INCLUDED.
9. ALL CIVIL/SITE STRUCTURES LAYOUT DIMENSIONS SHOWN ON THE SITE PLAN ARE REPRESENTATIVE OF SPECIFIC EQUIPMENT INSTALLATION SELECTED DURING THE DESIGN PROCESS. THE CONTRACTOR SHALL DETERMINE THE ACTUAL CIVIL/SITE/STRUCTURE DIMENSIONS BASED ON THE SELECTED AND APPROVED EQUIPMENT INSTALLATION.

DESIGN LOADS:

1. ALL LOADS ARE IN ACCORDANCE WITH THE INTERNATIONAL BUILDING CODE, 2009 U.N.O.
2. DEAD LOADS: WEIGHT OF BUILDING COMPONENTS
3. LIVE LOADS:
   ROOF LIVE LOAD = 98 kg/m² [20 PSF]
   ROOF SNOW LOAD = 98 kg/m² [20 PSF]
   FLOOR LIVE LOAD: = 342 kg/m² [50 PSF] U.N.O.
   = 490 kg/m² [100 PSF] FOR CORRIDORS AT GROUND FLOOR.
   = 390 kg/m² [80 PSF] FOR CORRIDORS ABOVE GROUND FLOOR.
   = 490 kg/m² [100 PSF] FOR STAIRS OR MINIMUM CONCENTRATED LOAD OF 1.3 kN [300 LB] APPLIED WHERE IT IS MOST CRITICAL.
   = 610 kg/m² [125 PSF] FOR MECHANICAL ROOM
   PARTITION LOAD: = 73.5 kg/m² [15 PSF]
4. WIND LOADS: BASIC WIND SPEED, USING 3 SECOND GUST, 145 KPH [90 MPH]. EXPOSURE C AND IMPORTANCE FACTOR OF 1.15 AND SHALL BE EMPLOYED AS REQUIRED PER ASCE 7–2005.
5. SEISMIC DESIGN: KANDAHAR, AFGHANISTAN IS THE SEISMIC BASIS OF DESIGN. SPECTRAL ACCELERATION BASED ON SS=0.30g AND S1=0.16g OCCUPANCY CATEGORY IV, SITE CLASS D, IMPORTANCE FACTOR, (I)=1.5, DIRECTION OF SEISMIC LOAD IS IN ACCORDANCE WITH ASCE 7–05, 12.5, DIRECTION OF LOADING.

FOUNDATIONS:

1. FOUNDATIONS HAVE BEEN DESIGNED FOR AN ASSUMED ALLOWABLE BEARING CAPACITY OF 96 kPA [2000 PSF] AND A MODULUS OF SUBGRADE REACTION 27.15 MPa/m [100 lb/in²/in]. Ko AND Kp ARE ASSUMED TO BE 0.5 AND 3.0 RESPECTIVELY. THE ASSUMED ALLOWABLE BEARING CAPACITY OF 96 kPa [2000 PSF] SHALL BE PERMITTED TO BE INCREASED BY ONE–THIRD WHERE USED WITH THE ALTERNATIVE BASIC LOAD COMBINATION OF SECTION 1605.3.2. THAT INCLUDE WIND AND EARTHQUAKE LOADS. CONTRACTOR SHALL CONDUCT AN INDEPENDENT GEOTECHNICAL INVESTIGATION TO VERIFY THESE ASSUMED VALUES, IF THE ASSUMED VALUES CAN NOT BE VERIFIED, THE CONTRACTOR SHALL NOTIFY THE CONTRACTING OFFICER IN WRITING OF THE DISCREPANCIES.
2. ALL FOOTINGS SHALL BE PLACED ON NATURAL UNDISTURBED SOIL OR ON COMPACTED SELECT GRANULAR MATERIAL FILL PREPARED AS FOLLOWS:
   (A) REMOVE UNSUITABLE MATERIAL BELOW THE FOOTING AND REPLACE WITH COMPACTED SELECT GRANULAR MATERIAL FILL TO A DEPTH DEEMED ADEQUATE BY THE GEOTECHNICAL ENGINEER. PROVIDE FOUNDATION MATERIAL MEETING OR EXCEEDING THE REQUIREMENT STATED IN FOUNDATION NOTE 1 ABOVE.
   (B) FILL MATERIAL MUST BE PLACED IN LIFTS UP TO A MINIMUM OF 150mm IN THICKNESS. EACH LIFT COMPACTED TO A MINIMUM OF 95% OF THE MAXIMUM DRY DENSITY AS DETERMINED BY ASTM D1557 AT MOISTURE CONTENT WITHIN MINUS 1% TO PLUS 2% OF THE OPTIMUM.
3. ALL DIMENSIONS, ELEVATIONS AND EXISTING CONDITIONS SHALL BE VERIFIED IN THE FIELD.
4. BEARING SOIL SHALL BE INSPECTED AND APPROVED BY THE QUALITY CONTROL ENGINEER BEFORE CONSTRUCTING ANY FOOTINGS. NO FOUNDATION CONCRETE SHALL BE PLACED IN WATER OR ON FROZEN SUBGRADE MATERIAL.
5. ASSUMED FROST DEPTH IS 800mm ALL PERIMETER SPREAD FOOTINGS SHALL BE FOUNDED AT LEAST 800MM BELOW ADJACENT FINISHED GRADE, IF APPLICABLE U.N.O..
6. IT SHALL BE THE RESPONSIBILITY OF THE CONTRACTOR TO PROVIDE TEMPORARY SUPPORT AS NECESSARY DURING EXCAVATION AND UNDERPINNING TO MAINTAIN THE INTEGRITY OF ANY ADJACENT EXISTING STRUCTURES AN/OR INFRASTRUCTURE.
7. INTERIOR FLOOR SLABS ON GRADE SHALL BE UNDERLAIN BY A MINIMUM OF 225mm CAPILLARY WATER BARRIER OF 13mm CRUSHED GRAVEL PLACED OVER COMPACTED SELECT GRANULAR MATERIAL OR NATURAL SUBGRADE.
8. THE VAPOR BARRIER SHALL BE A POLYETHYLENE SHEET OF 10 MILS MIN U.N.O. THICKNESS. LAP ALL JOINTS 300MM MIN AND SEAL WATERTIGHT BY SEALANT APPLIED BETWEEN OVERLAPPING EDGES AND ENDS.
9. FOUNDATION DESIGN SHALL BE MODIFIED BY THE CONTRACTOR IF THE EXISTING SOIL CONDITIONS DO NOT MEET THE MINIMUM REQUIREMENTS, AND IF LOADING CRITERIA DIFFERS FROM WHAT IS PRESENTED HEREIN.

CAST IN PLACE CONCRETE:

1. CONCRETE WORK SHALL CONFORM TO:
   ACI 301–05 – SPECIFICATIONS FOR STRUCTURAL CONCRETE.
   ACI 318–08 – BUILDING CODE REQUIREMENTS FOR STRUCTURAL CONCRETE AND COMMENTARY.
2. CONCRETE SHALL HAVE A MINIMUM CONCRETE COMPRESSIVE STRENGTH AT 28 DAYS, F'C = 27.5 MPa [4,000 PSI]. THE MAXIMUM WATER–CEMENT RATIO SHALL BE 0.45 (BY WEIGHT). ALL CONCRETE EXPOSED TO WEATHER SHALL BE AIR–ENTRAINED.
3. CONCRETE SHALL BE CONTROLLED NORMAL WEIGHT CONCRETE, PROPORTIONED, MIXED AND PLACED UNDER THE SUPERVISION OF AN APPROVED QUALITY CONTROL ENGINEER.
4. THE FOLLOWING SPECIFIED CONCRETE COVER SHALL BE PROVIDED FOR REINFORCING U.N.O.:
   (A) CONCRETE PLACED AGAINST THE EARTH 75mm
   (B) BELOW GRADE CONCRETE:
   SIDES OF FOOTINGS AND WALLS
   18 ø BAR AND LARGER 50mm
   16 ø BAR AND SMALLER 50mm
   (C) BEAMS AND COLUMNS 50mm
   (D) CONCRETE WALLS 40mm
   (E) SLABS–ON GRADE (FROM TOP) 50mm
5. CHAMFER EXPOSED EDGES 20mm U.N.O..
6. ALL REINFORCING STEEL SHALL BE DEFORMED BARS CONFORMING TO ASTM A706 OR ASTM A615, GRADE 60. SEE SPECIFICATION SECTION 03 20 00.00 10 (CONCRETE REINFORCING) PART 2 FOR ADDITIONAL REQUIREMENT ON ASTM A615 REINFORCING. SEE SPLICE TABLE FOR LAP LENGTHS. MINIMUM YIELD STRENGTH FY = 4218 kg/cm².
7. DO NOT WELD OR BEND REINFORCEMENT IN FIELD UNLESS SPECIFICALLY SHOWN OR APPROVED BY ENGINEER.
8. REINFORCING BARS SHALL EXTEND 12 BAR DIAMETERS BUT NOT LESS THAN 300mm BEYOND BEND U.N.O..
9. NO BARS SHALL BE CUT OR OMITTED IN THE FIELD BECAUSE OF SLEEVES, DUCT OPENINGS OR RECESSES. BARS MAY BE MOVED ASIDE WITHOUT CHANGE IN LEVEL WITH THE APPROVAL OF THE QUALITY CONTROL ENGINEER.
10. REINFORCEMENT STEEL SHALL BE CONTINUOUS THROUGH ALL CONSTRUCTION JOINTS. ALL CONSTRUCTION JOINTS SHALL BE KEYED U.N.O..
11. WHERE VERTICAL CONSTRUCTION JOINTS ARE NOT SHOWN, OR WHEN ALTERNATE LOCATIONS ARE PROPOSED, DRAWINGS SHOWING LOCATION OF CONSTRUCTION JOINTS AND CONCRETE PLACING SEQUENCE SHALL BE SUBMITTED TO THE ENGINEER FOR APPROVAL PRIOR TO PREPARATION OF THE REINFORCEMENT SHOP DRAWINGS. CONSTRUCTION JOINTS SHALL BE LOCATED IN THE MIDDLE THIRD OF THE BEAM OR SLAB SPAN. CONCRETE SHALL BE PLACED WITHOUT HORIZONTAL CONSTRUCTION JOINTS U.N.O..
12. ALL KEYS SHOWN SHALL BE 50mm BY 100mm NOMINAL U.N.O..
13. CONSTRUCTION JOINTS BETWEEN INTERIOR SLABS ON GRADE AND VERTICAL SURFACES SHALL CONSIST OF ASPHALT–SATURATED FELT, EXTENDING THE FULL DEPTH OF THE SLAB. EXPANSION JOINT FILLERS SHALL BE PREFORMED MATERIALS CONFORMING TO ASTM D994
14. DETAILING, FABRICATION, AND ERECTION OF REINFORCEMENT SHALL CONFORM TO ACI 318 BUILDING CODE REQUIREMENTS FOR STRUCTURAL CONCRETE, ACI 315 DETAILS AND DETAILING OF CONCRETE REINFORCEMENT, AND CRSI MANUAL OF STANDARD PRACTICE.
15. CONTRACTOR SHALL COORDINATE LOCATIONS OF FLOOR DRAINS, PIPING, ELECTRICAL CONDUITS, GROUNDS, SLEEVES, INSERTS, ETC, WITH CONCRETE CONSTRUCTION. NO PIPES SHALL PASS THROUGH CONCRETE WITHOUT THE PERMISSION OF THE CONTRACTING OFFICER. STEEL PIPE SLEEVES SHALL BE PROVIDED AND SPACED A MINIMUM OF THREE PIPE DIAMETERS ON CENTER. CONDUIT AND OTHER EMBEDDED ITEMS SHALL BE CLEAN AND FREE OF OIL AND OTHER FOREIGN MATTER SUCH AS LOOSE COATINGS OR RUST, PAINT AND SCALE.
16. PROVIDE ALL NECESSARY CHAIRS, CHAIR BARS, SPACERS, ETC., WIRED SECURELY TO HOLD REINFORCEMENT IN POSITION.
17. THE CONTRACTOR SHALL SUBMIT SHOP DRAWING SHOWING REINFORCING STEEL PLACEMENT, SCHEDULES, SIZES, GRADES. AND SPLICING AND BENDING DETAILS. DRAWINGS SHALL SHOW SUPPORT DETAILS INCLUDING TYPES, SIZES AND SPACING.
18. REINFORCEMENT SHALL BE STORED OFF THE GROUND ON PLATFORMS, SKIDS OR OTHER SUPPORTS.

MINIMUM RE–BAR SPLICE LENGTHS mm
fy = 4218kg/cm² f'c = 28mpa UNLESS NOTED OTHERWISE ON DRAWINGS

BAR SIZE ø mm	TOP BARS*	OTHER BARS
6	600	600
10	650	600
12	815	635
16	1016	788
20	1590	1220
22	1755	1350
25	1990	1530
28	2230	1710
32	2550	1960

SPLICE NOTES:

1. BASED ON NORMAL WEIGHT CONCRETE, UNCOATED BARS, CLEAR SPACING NOT LESS THAN TWO BAR DIAMETERS, AND CLEAR COVER NOT LESS THAN 40mm.
2. WHERE CLEAR SPACING BETWEEN BARS IS LESS THAN TWO BAR DIAMETERS, OR CLEAR COVER IS LESS THAN ONE BAR DIAMETERS, INCREASE SPLICE LENGTHS SHOWN BY 50%.
3. WHERE CLEAR SPACING IS NOT LESS THAN FOUR BAR DIAMETERS AND CLEAR COVER IS NOT LESS THAN TWO BAR DIAMETERS, SPLICE LENGTHS SHOWN CAN BE DECREASED BY 40%.
4. BARS ARE CONSIDERED TO BE TOP BARS WHERE MORE THAN 300mm (12") OF CONCRETE IS CAST BELOW THE BAR. WALL HORIZONTAL BARS UNIFORMLY SPACED IN A VERTICAL PLANE AT 300mm [12"] MAXIMUM SPACING ARE NOT CONSIDERED TOP BARS.
5. WHEN BARS OF DIFFERENT SIZE ARE LAP SPLICED, SPLICE LENGTH SHALL BE THE LARGER OF THE TENSION DEVELOPMENT LENGTH OF THE LARGER BAR AND TENSION LAP SPLICE LENGTH OF SMALLER BAR.

ABBREVIATIONS AND SYMBOLS

ADD'L	ADDITIONAL
ALT.	ALTERNATE
ARCH	ARCHITECTURAL
BOT.	BOTTOM
B.O.	BOTTOM OF
CLR	CLEAR
CONT.	CONTINUOUS
COL	COLUMN
COORD.	COORDINATE
CTR.	CENTER
DIA.	DIAMETER
DN	DOWN
DWG	DRAWING
E–W	EAST–WEST
E.F.	EACH FACE
EL.	ELEVATION
EOD	EDGE OF DECK
EOS	EDGE OF SLABE.W.
EQ.	EQUAL
E.W.	EACH WAY
FDN	FOUNDATION
FIN. GR.	FINISHED GRADE
FTG	FOOTING
HP	HIGH POINT
GALV.	GALVANIZED
I.F.	INSIDE FACE
INFO	INFORMATION
JT	JOINT
LP	LOW POINT
MFR.	MANUFACTURER
MAX.	MAXIMUM
MIN.	MINIMUM
N–S	NORTH–SOUTH
NO.	NUMBER
O.C.	ON CENTER
O.D.	OUTSIDE DIAMETER
O.F.	OUTSIDE FACE
OPN'G	OPENING
PL	PLATE
PROP.	PROPOSED
PSF	POUNDS PER SQUARE FOOT
PSI	POUNDS PER SQUARE INCH
REINF.	REINFORCING
SIM	SIMILAR
SQ.	SQUARE
STD	STANDARD
STIFF	STIFFENER
STRUCT	STRUCTURAL
T&B	TOP AND BOTTOM
T.O.	TOP OF
TYP.	TYPICAL
U.N.O.	UNLESS NOTED OTHERWISE
VERT.	VERTICAL
VIF	VERIFY IN FIELD
	CONSTRUCTION JOINT
	DIRECTION OF SPAN
	DIRECTION OF SLOPE
ℙ	PLATE
℄	CENTERLINE
DO	DITTO
⅊	SIDEWALL LINE

BEND DIAMETER SCHEDULE

db = BAR DIAMETER

D = FINISHED INSIDE BEND DIA.

D = 6 db FOR ø10mm THRU ø25mm

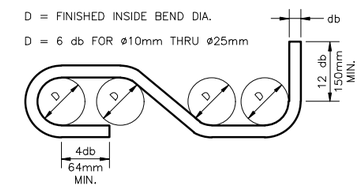

STANDARD HOOKS AND BENDS

WALL BARS SHALL BE TIED TOGETHER

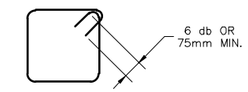

PEDESTAL TIES

SPLICES FOR SUCCESSIVE TIES TO BE PLACED AT ALTERNATE CORNERS

TYPICAL REINFORCING BAR STIRRUPS AND TIES

N.T.S.

LEGEND (FOR REINFORCING SHOWN IN PLAN OR ELEVATION)

	90° HOOK IN THE PLANE OF THE DRAWING
	90° BEND PERPENDICULAR TO THE PLANE OF THE DRAWING
	HOOK PERPENDICULAR TO THE PLANE OF THE DRAWING
	180° HOOK IN THE PLANE OF THE DRAWING
	OFFSET IN THE PLANE OF THE DRAWING

BAR SIZE	ø10	ø12	ø16	ø20	ø22	ø25	ø28	ø32
ldh	190	230	305	380	420	475	540	610

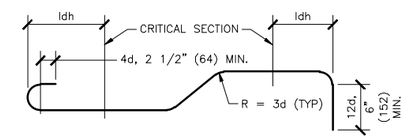

180° HOOK 45° BEND 90° HOOK

NOTE: "d" = BAR DIAMETER.

BENDS IN REINFORCING BARS

N.T.S.

THESE DRAWINGS ARE "NOT APPROVED FOR CONSTRUCTION" SINCE THESE ARE BASED UPON ASSUMED CONDITIONS. THE CONTRACTOR SHALL NOT PROCEED WITH CONSTRUCTION UNTIL THE ASSUMED CONDITIONS ARE VALIDATED AND APPROVAL IS RECEIVED FROM THE CONTRACTING OFFICER.

COMMONWEALTH OF MASSACHUSETTS
QING ZHONG.
STRUCTURAL
No. 46653
REGISTERED PROFESSIONAL ENGINEER
2/6/2012

UNLESS OTHERWISE NOTED, LINEAR DIMENSIONS SHOWN ARE IN MILLIMETERS.

DESIGN COMPLETE SUBMITTAL

SYMB	DESCRIPTION	DATE	APR
FNL	DESIGN COMPLETE SUBMITTAL	02–06–12	JZ

DESIGNED BY: RB
DATE: 02–06–2012
DRAWN BY: RRD
SUBMITTED BY: TETRA TECH
CHECKED BY: JZ
FILE NO.: AF1202$–SS001GN

TETRA TECH

US Army Corps of Engineers
Middle East District

COMMAND & CONTROL FACILITY
KANDAHAR AIR FIELD, AFGHANISTAN
STANDARD DRAWINGS
STRUCTURAL GENERAL NOTES
SHEET 1 OF 2

SHEET REFERENCE NUMBER:
$
SS–001

W:\23308\127–23308–11004\CAD\MED Drawings\AF1202\Standards\Structural\AF1202$–SS001GN.dwg 3/7/2012 9:59:54 AM Jeffers, Scott

MASONRY:

1. CONCRETE MASONRY CONSTRUCTION, SHALL CONFORM TO SPECIFICATION FOR CONCRETE MASONRY CONSTRUCTION (ACI 530.1/ASCE-5/TMS 602) & BUILDING CODE REQUIREMENT FOR MASONRY STRUCTURES (ACI530/ASCE-5/TMS 402, 2008).
2. ALL CONCRETE MASONRY UNITS (CMU) SHALL CONFORM TO ASTM C 90, TYPE I, NORMAL WEIGHT.
3. CONCRETE MASONRY UNITS SHALL BE A MINIMUM UNIT COMPRESSIVE STRENGTH OF 141 kg/cm^2 (2,000 PSI) MEASURED ON THE NET SECTION AS DETERMINED BY THE UNIT TEST METHOD IN ACCORDANCE WITH ASTM C 140. THE MINIMUM COMPRESSIVE STRENGTH OF MASONRY (f'm) SHALL BE 105 kg/cm^2 (1500 PSI) AT 28 DAYS, MEASURED ON THE NET SECTION.
4. MORTAR SHALL BE TYPE S CONFORMING TO ASTM C 270, AND HAVE A MINIMUM 28 DAY COMPRESSIVE STRENGTH OF 12.4 MPa.
5. GROUT SHALL CONFORM TO ASTM C 476, FINE TYPE, AND SHALL HAVE A MINIMUM 28 DAY COMPRESSIVE STRENGTH OF 176 kg/cm^2 (2,500 PSI).
6. BONDING METHODS, TIES, AND ACCESSORIES SHALL BE APPROVED BY THE CONTRACTING OFFICER.
7. CMU MASONRY DETAILS, ELEVATIONS AND NOTES APPLY TO ALL CMU EXTERIOR AND INTERIOR WALLS U.N.O. EXTERIOR AND INTERIOR WALLS CONSIST OF A SINGLE CMU WIDTH U.N.O.
8. VERTICAL REINFORCING SHALL EXTEND TO 50mm BELOW THE TOP OF THE CMU WALL.
9. REINFORCING BARS TO EXTEND 12 BAR DIAMETERS BUT NOT LESS THAN 300mm BEYOND BEND U.N.O..
10. AT OPENINGS WIDER THAN 300mm IN CMU WALLS, PROVIDE CMU LINTELS PER TYPICAL CMU LINTEL DETAIL U.N.O. AND ADDITIONAL REINFORCING FULL HEIGHT PER JAMBS DETAIL.
11. UNLESS NOTED OTHERWISE ON PLANS, PROVIDE THE FOLLOWING ADDITIONAL VERTICAL REINFORCEMENT IN THE CELL IMMEDIATELY ADJACENT TO EACH SIDE OF A MASONRY OPENING AND IN THE CELL OF DISCONTINUOUS WALLS. THESE BARS SHALL BE EXTENDED FULL HEIGHT OF THE WALL:
    - 150mm AND 200mm CMU WALLS – (2) 16 ø BARS
12. REINFORCING BARS SHALL CONFORM TO ASTM A 615, GRADE 60. MINIMUM YIELD STRENGTH FY = 4,218 kg/cm^2.
13. CONCRETE MASONRY UNITS SHALL BE LAID IN RUNNING (COMMON) BOND, U.N.O..
14. ALL WALLS CONSTRUCTED OF CONCRETE MASONRY BLOCKS SHALL BE REINFORCED VERTICALLY AS INDICATED ON THE STRUCTURAL DRAWINGS. REINFORCEMENT SHALL BE LOCATED IN THE CENTER OF WALL U.N.O. BAR POSITIONERS SHALL BE SUPPLIED FOR VERTICAL REINFORCING. SPLICE VERTICAL BARS PER WALL SECTION DETAIL AND TIE WITH ANNEALED WIRE. FILL ALL REINFORCED CELLS WITH GROUT (ASTM C 476). GROUT CELLS IN MAXIMUM LIFT HEIGHT OF 1200mm. ALL REINFORCED CMU SHALL BE TWO-CELL UNITS.
15. FOR MASONRY FINISHING, SEE ARCHITECTURAL DRAWINGS.
16. ALL CELLS SHALL BE SOLID GROUTED AT EXTERIOR CMU WALLS.

NOTES ON SEWER MANHOLE:

1. THE SEWER MANHOLE HAS BEEN DESIGNED IN ACCORDANCE WITH:
    - A.) ACI 350-01 CODE REQUIREMENTS FOR ENVIRONMENTAL ENGINEERING CONCRETE STRUCTURES AND COMMENTARY.
    - B.) PCA RECTANGULAR CONCRETE TANK.
    - C.) SEISMIC DESIGN PER 2007 SPECIFICATIONS OF THE AMERICAN ASSOCIATION OF STATE HIGHWAY AND TRANSPORTATION OFFICIALS WITH CURRENT INTERIM SPECIFICATIONS (AASHTO).
    - D.) ACI 318-08 BUILDING CODE REQUIREMENTS FOR STRUCTURAL CONCRETE AND COMMENTARY.
2. LOADING:

    LIVE LOAD ON ROOF SLAB OF MANHOLE: HS20 TRUCK.
3. THE FOLLOWING ASSUMED GEOTECHNICAL PROPERTIES WERE USED FOR DESIGN BASED ON SELECTED GRANULAR MATERIAL. CONTRACTOR NEEDS TO CONDUCT HIS/HER OWN GEOTECHNICAL INVESTIGATION TO VERIFY THESE ASSUMED VALUES. IF HE/SHE FINDS THE ASSUMED VALUES CAN NOT BE VERIFIED, THE CONTRACTOR NEEDS TO CONTACT THE CONTRACTING OFFICER IN WRITING OF THE DISCREPANCIES.
    - A.) UNIT WEIGHT OF SOIL: 1922 Kg/M^3 [120 PCF]
    - B.) ALLOWABLE BEARING PRESSURE: 96 kPa [2000 PSF]
    - C.) ACTIVE EARTH PRESSURE COEFFICIENT: Ka=0.33
    - D.) PASSIVE EARTH PRESSURE COEFFICIENT: Kp=3.0
    - E.) AT REST PRESSURE COEFFICIENT: Ko=0.5
    - F.) GROUND WATER IS ASSUMED TO BE 1500mm BELOW GRADE, CONTRACTOR NEEDS TO VERIFY THAT THE WATER TABLE IS NOT ABOVE THIS LEVEL. IF IT IS ABOVE THIS LEVEL, NOTIFY THE CONTRACTING OFFICER PRIOR TO CONSTRUCTION.
4. FLOOR SLAB SHALL BE PLACED ON COMPACTED SELECT GRANULAR MATERIAL PREPARED AS FOLLOWS:
    - A.) REMOVE UNSUITABLE MATERIAL BELOW THE FOOTING AND REPLACE WITH COMPACTED SELECT GRANULAR MATERIAL TO A DEPTH WHERE NATURAL SOIL AND OR COMPACT FILL IS ENCOUNTERED.
    - B.) FILL MATERIAL MUST BE PLACED IN LIFTS UP TO A MAXIMUM OF 150mm IN THICKNESS. EACH LIFT COMPACTED TO A MINIMUM OF 95% OF THE MAXIMUM DRY DENSITY AS DETERMINED BY ASTM D1557.
5. MAINTAIN LEVEL OF BACKFILL WITHIN 300mm ON THE OPPOSITE SIDE OF THE TANK WHILE BACKFILLING. STOP BACKFILL AT MINIMUM 1500mm BELOW GRADE AND POUR THE ROOF SLAB, OR DO NOT BACKFILL AGAINST WALLS UNTIL THE ROOF SLAB IS IN PLACE.

THESE DRAWINGS ARE "NOT APPROVED FOR CONSTRUCTION" SINCE THESE ARE BASED UPON ASSUMED CONDITIONS. THE CONTRACTOR SHALL NOT PROCEED WITH CONSTRUCTION UNTIL THE ASSUMED CONDITIONS ARE VALIDATED AND APPROVAL IS RECEIVED FROM THE CONTRACTING OFFICER.

COMMONWEALTH OF MASSACHUSETTS
QING ZHONG
STRUCTURAL
No. 48653
REGISTERED PROFESSIONAL ENGINEER

2/6/2012

UNLESS OTHERWISE NOTED, LINEAR DIMENSIONS SHOWN ARE IN MILLIMETERS.

DESIGN COMPLETE SUBMITTAL

SYMB	DESCRIPTION	DATE	APR
FNL	DESIGN COMPLETE SUBMITTAL	02-06-12	JZ

DESIGNED BY: RB
DATE: 02-06-2012
DRAWN BY: RRD
SUBMITTED BY: TETRA TECH
CHECKED BY: JZ
FILE NO.: AF1202$-SS002GN

TETRA TECH

US Army Corps of Engineers
Middle East District

COMMAND & CONTROL FACILITY
KANDAHAR AIR FIELD, AFGHANISTAN
STANDARD DRAWINGS
STRUCTURAL GENERAL NOTES
SHEET 2 OF 2

SHEET REFERENCE NUMBER:
$
SS-002

W:\23308\127-23308-11004\CAD\MED Drawings\AF1202\Standards\Structural\AF1202$-SS002GN.dwg 3/7/2012 10:00:14 AM Jeffers, Scott

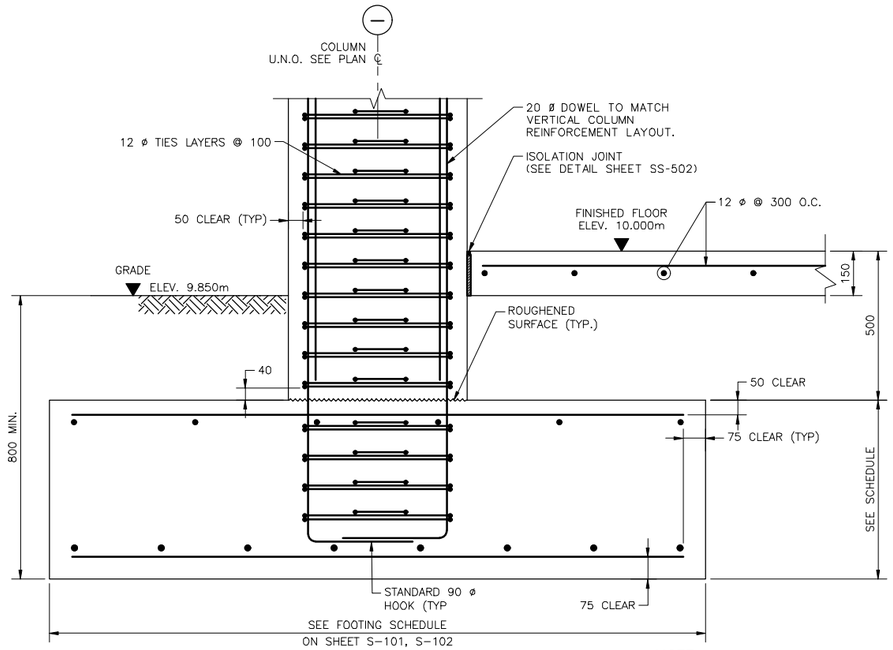

TYPICAL EXTERIOR SPREAD FOOTING AND COLUMN CONNECTION SECTION

SCALE 1:10 — A — S-101, S-102 | SS-501

NOTE:

MAXIMUM FOOTING BEARING PRESSURE UNDER SERVICE LOAD = 94.8 kPa [1980 PSF].

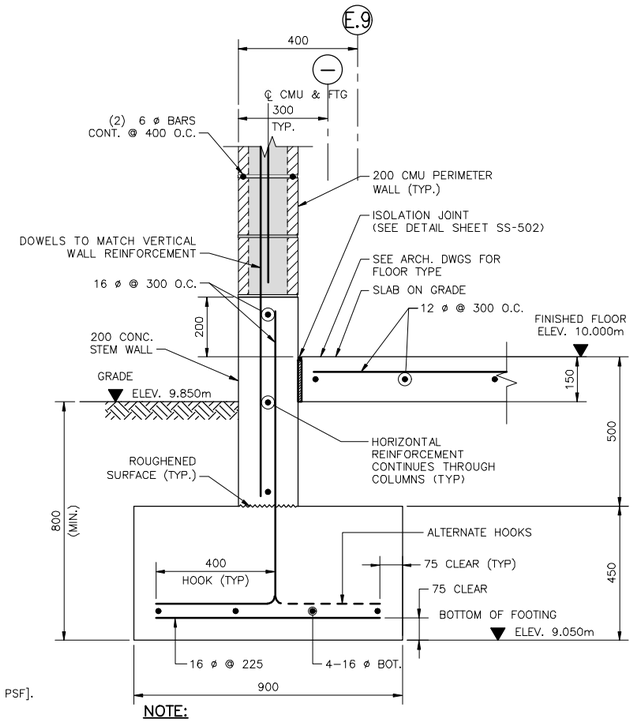

NOTE:

1. MAXIMUM FOOTING BEARING PRESSURE UNDER SERVICE LOAD = 38.3 kPa [800 PSF].
2. FOR CMU WALL REINFORCEMENT SEE TYPICAL WALL DETAIL ON SHEET SS-505.

EXTERIOR STRIP FOOTING SECTION

SCALE 1:10 — B — S-101, S-102 | SS-501

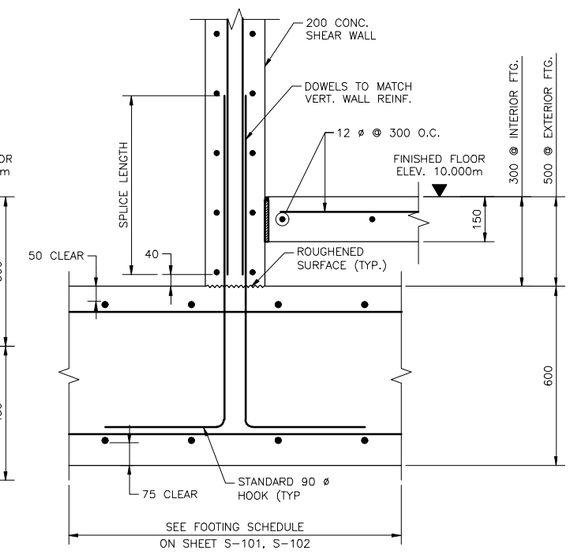

NOTE:

MAXIMUM FOOTING BEARING PRESSURE UNDER SERVICE LOAD = 90.9 kPa [1900 PSF].

COMBINED FOOTING/SHEAR WALL SECTION

SCALE 1:10 — C — S-101 | SS-501

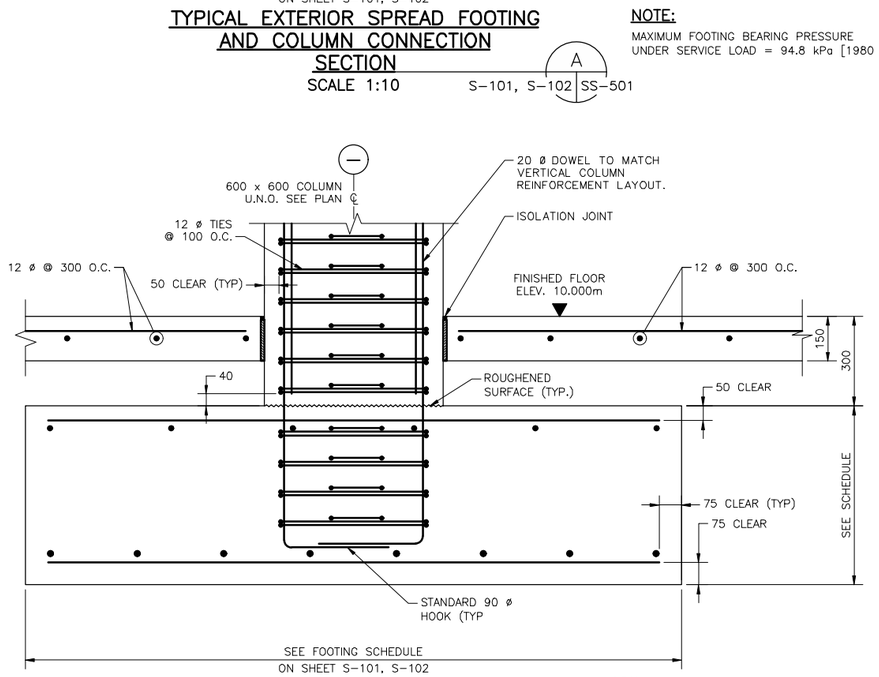

NOTE:

MAXIMUM FOOTING BEARING PRESSURE UNDER SERVICE LOAD = 93.4 kPa [1950 PSF].

TYPICAL INTERIOR SPREAD FOOTING AND COLUMN CONNECTION SECTION

SCALE 1:10 — D — S-101, S-102 | SS-501

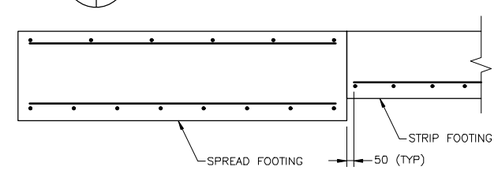

TYPICAL SPREAD FOOTING AND STRIP FOOTING CONNECTION DETAIL

SCALE 1:20

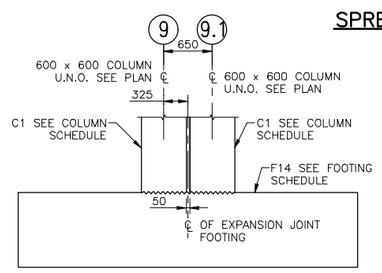

DETAIL AT EXPANSION JOINT

SCALE N.T.S. — C1 — S-102 | SS-501

1:20 (1 .50 0 1)

1:10 (0 .50 1.00)

THESE DRAWINGS ARE "NOT APPROVED FOR CONSTRUCTION" SINCE THESE ARE BASED UPON ASSUMED CONDITIONS. THE CONTRACTOR SHALL NOT PROCEED WITH CONSTRUCTION UNTIL THE ASSUMED CONDITIONS ARE VALIDATED AND APPROVAL IS RECEIVED FROM THE CONTRACTING OFFICER.

QING ZHONG. STRUCTURAL No. 46653 — REGISTERED PROFESSIONAL ENGINEER — COMMONWEALTH OF MASSACHUSETTS

2/6/2012

UNLESS OTHERWISE NOTED, LINEAR DIMENSIONS SHOWN ARE IN MILLIMETERS.

DESIGN COMPLETE SUBMITTAL

SYMB	DESCRIPTION	DATE	APR
FNL	DESIGN COMPLETE SUBMITTAL	02-06-12	JZ

DESIGNED BY: RB — DATE: 02-06-2012
DRAWN BY: GRN — SUBMITTED BY: TETRA TECH
CHECKED BY: JZ — FILE NO.: AF1202$-SS501DT

TETRA TECH

US Army Corps of Engineers Middle East District

COMMAND & CONTROL FACILITY
KANDAHAR AIR FIELD, AFGHANISTAN
STANDARD DRAWINGS
FOUNDATION SECTIONS AND DETAILS

SHEET REFERENCE NUMBER: $ SS-501

W:\23308\127-23308-11004\CAD\MED Drawings\AF1202\Standards\Structural\AF1202$-SS501DT.dwg 3/7/2012 10:00:58 AM Jeffers, Scott

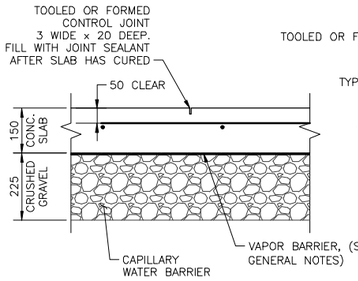

CONTROL JOINT

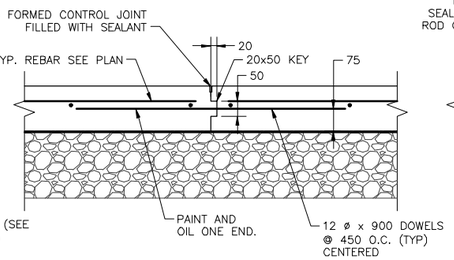

CONSTRUCTION JOINT

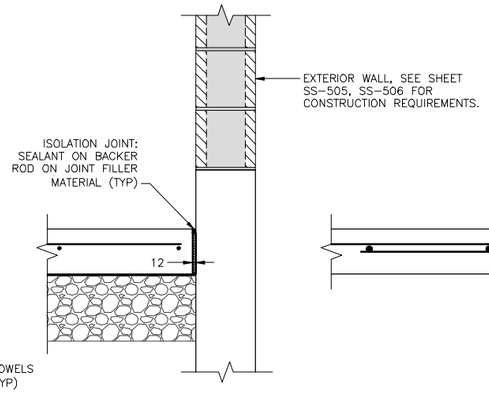

ISOLATION JOINT

SLAB ON GRADE DETAILS

SCALE 1:10

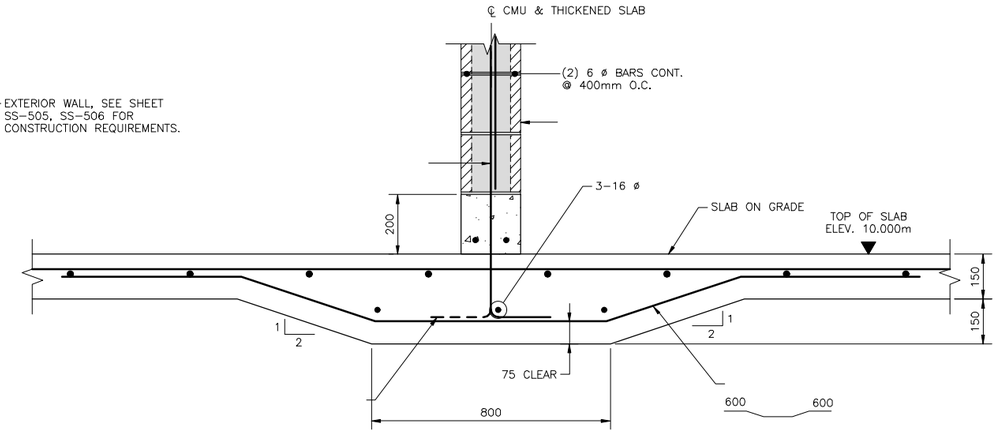

NOTES:

1. PROVIDE THICKENED SLAB UNDERNEATH ALL NON-BEARING CMU WALLS, SEE ARCHITECTURAL DRAWINGS FOR ALL WALLS LOCATION AND SIZE.
2. FOR CMU WALL REINFORCEMENT SEE TYPICAL WALL DETAIL ON SHEET SS-506.

THICKENED SLAB AT NON-LOAD BEARING WALL SECTION

SCALE 1:10

E
S-101, S-102 SS-502

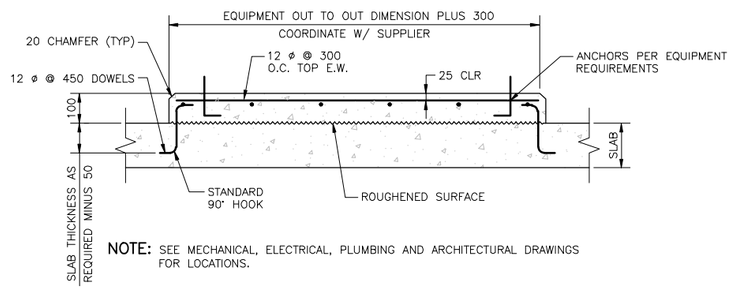

NOTE: SEE MECHANICAL, ELECTRICAL, PLUMBING AND ARCHITECTURAL DRAWINGS FOR LOCATIONS.

TYPICAL INTERIOR EQUIPMENT PAD DETAIL

NOT TO SCALE

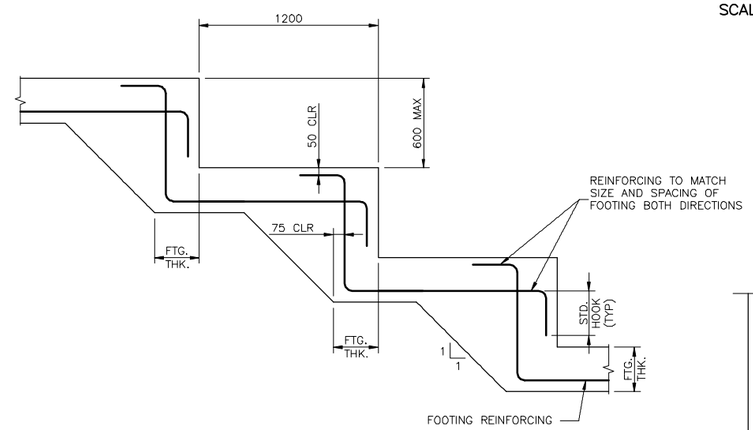

TYPICAL FOOTING STEP DETAIL

NOT TO SCALE

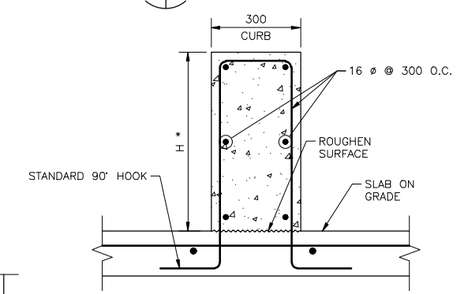

STAIRWAY SUPPORT DETAIL

NOTE:

* CONTRACTOR TO COORDINATE CURB LOCATION AND HEIGHT WITH STAIRWAY.

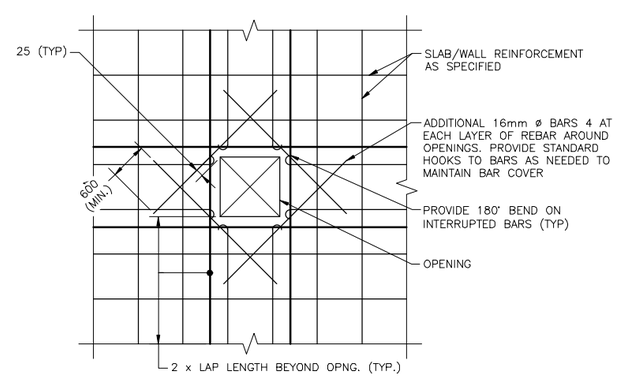

NOTE:

ALL TOP AND BOTTOM SLAB/WALL BARS INTERRUPTED BY OPENING SHALL BE REPLACED BY ADDITIONAL REINFORCING EQUAL TO THAT INTERRUPTED. PLACE HALF OF THE ADDITIONAL REINFORCING ON EACH SIDE OF OPENING. TYPICAL FOR ALL ADDITIONAL REINFORCING.

1. FOR OPENING > 200MM TO < 600MM.

REINFORCING AROUND STRUCTURAL SLAB AND WALL OPENINGS & RE-ENTRANT CORNERS

N.T.S.

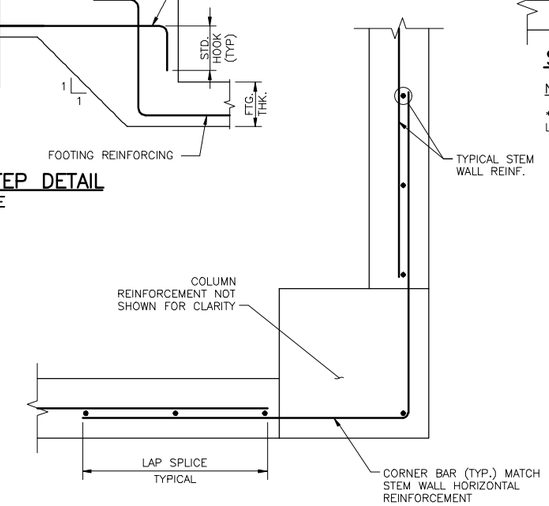

TYPICAL 200mm CONCRETE STEM WALL CORNER DETAIL

SCALE 1:10

0 .50 1.00
1:10

THESE DRAWINGS ARE "NOT APPROVED FOR CONSTRUCTION" SINCE THESE ARE BASED UPON ASSUMED CONDITIONS. THE CONTRACTOR SHALL NOT PROCEED WITH CONSTRUCTION UNTIL THE ASSUMED CONDITIONS ARE VALIDATED AND APPROVAL IS RECEIVED FROM THE CONTRACTING OFFICER.

QING ZHONG. STRUCTURAL No. 46653 REGISTERED PROFESSIONAL ENGINEER
2/6/2012

UNLESS OTHERWISE NOTED, LINEAR DIMENSIONS SHOWN ARE IN MILLIMETERS.

DESIGN COMPLETE SUBMITTAL

SYMB	DESCRIPTION	DATE	APR
FNL	DESIGN COMPLETE SUBMITTAL	02-06-12	JZ

DESIGNED BY: RB
DATE: 02-06-2012
DRAWN BY: GRN
SUBMITTED BY: TETRA TECH
CHECKED BY: JZ
FILE NO.: AF1202$-SS502DT

TETRA TECH

US Army Corps of Engineers Middle East District

COMMAND & CONTROL FACILITY
KANDAHAR AIR FIELD, AFGHANISTAN
STANDARD DRAWINGS
CONCRETE SLAB DETAILS

SHEET REFERENCE NUMBER:
$
SS-502

W:\23308\127-23308-11004\CAD\MED Drawings\AF1202\Standards\Structural\AF1202$-SS502DT.dwg 3/7/2012 10:01:38 AM Jeffers, Scott

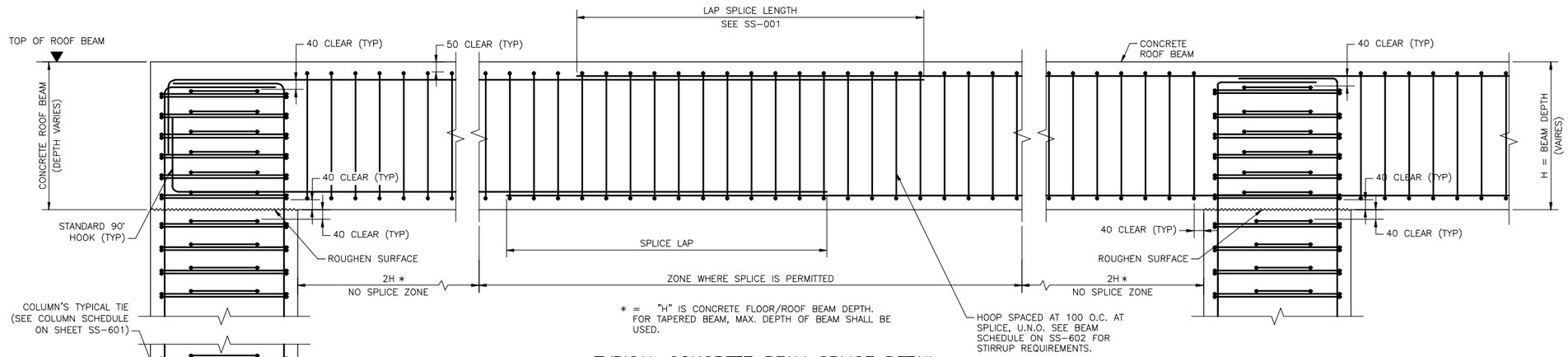

TYPICAL CONCRETE BEAM SPLICE DETAIL

SCALE 1:10

BEAM SPLICE NOTES:

1. IF A CONTINUOUS BEAM INCLUDES BEAMS OF DIFFERENT TYPES, SPLICE REINFORCEMENT AT THE BEAM WITH LESS AS (TOTAL AREA OF REINFORCEMENT) VALUE.
2. SPLICE TOP REINFORCEMENT AT THE MIDDLE OF THE BEAM.
3. SPLICE BOTTOM REINFORCEMENT AT THE ENDS OF THE ZONE WHERE SPLICE IS PERMITTED.

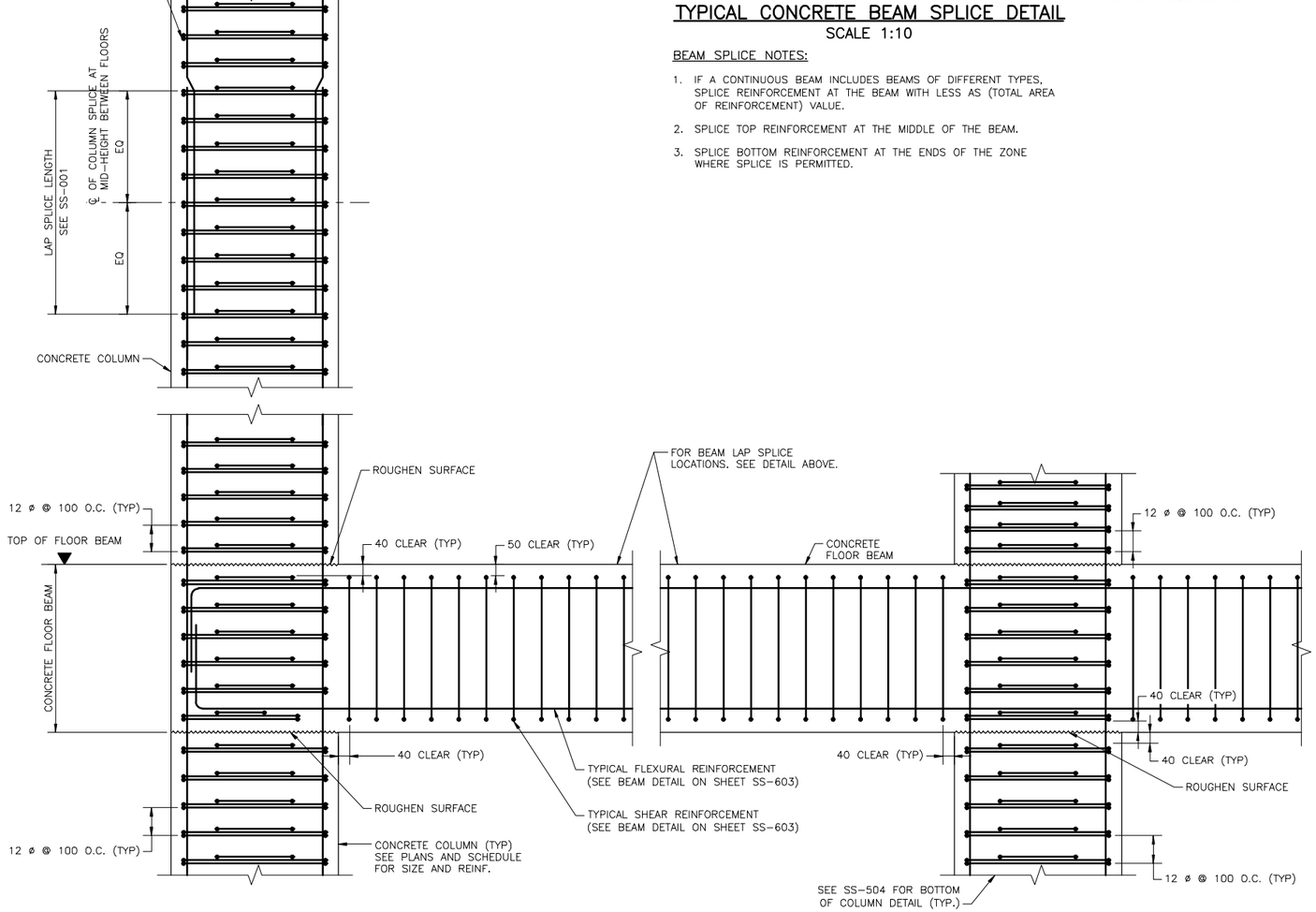

CONCRETE FRAME REINFORCEMENT DETAIL

SCALE 1:10

0 .50 1.00
1:10

THESE DRAWINGS ARE "NOT APPROVED FOR CONSTRUCTION" SINCE THESE ARE BASED UPON ASSUMED CONDITIONS. THE CONTRACTOR SHALL NOT PROCEED WITH CONSTRUCTION UNTIL THE ASSUMED CONDITIONS ARE VALIDATED AND APPROVAL IS RECEIVED FROM THE CONTRACTING OFFICER.

COMMONWEALTH OF MASSACHUSETTS
QING ZHONG
STRUCTURAL
No. 48853
REGISTERED PROFESSIONAL ENGINEER
2/6/2012

UNLESS OTHERWISE NOTED, LINEAR DIMENSIONS SHOWN ARE IN MILLIMETERS.

DESIGN COMPLETE SUBMITTAL

SYMB	DESCRIPTION	DATE	APR
FNL	DESIGN COMPLETE SUBMITTAL	02-06-12	JZ

DESIGNED BY: RB
DATE: 02-06-2012
DRAWN BY: GRN
SUBMITTED BY: TETRA TECH
CHECKED BY: JZ
FILE NO.: AF1202$-SS503DT

TETRA TECH

US Army Corps of Engineers
Middle East District

COMMAND & CONTROL FACILITY
KANDAHAR AIR FIELD, AFGHANISTAN
STANDARD DRAWINGS
BEAM AND COLUMN DETAILS
SHEET 1 OF 2

SHEET REFERENCE NUMBER:
$
SS-503

W:\23308\127-23308-11004\CAD\WED Drawings\AF1202\Standards\Structural\AF1202$-SS503DT.dwg 3/7/2012 10:02:15 AM Jeffers, Scott

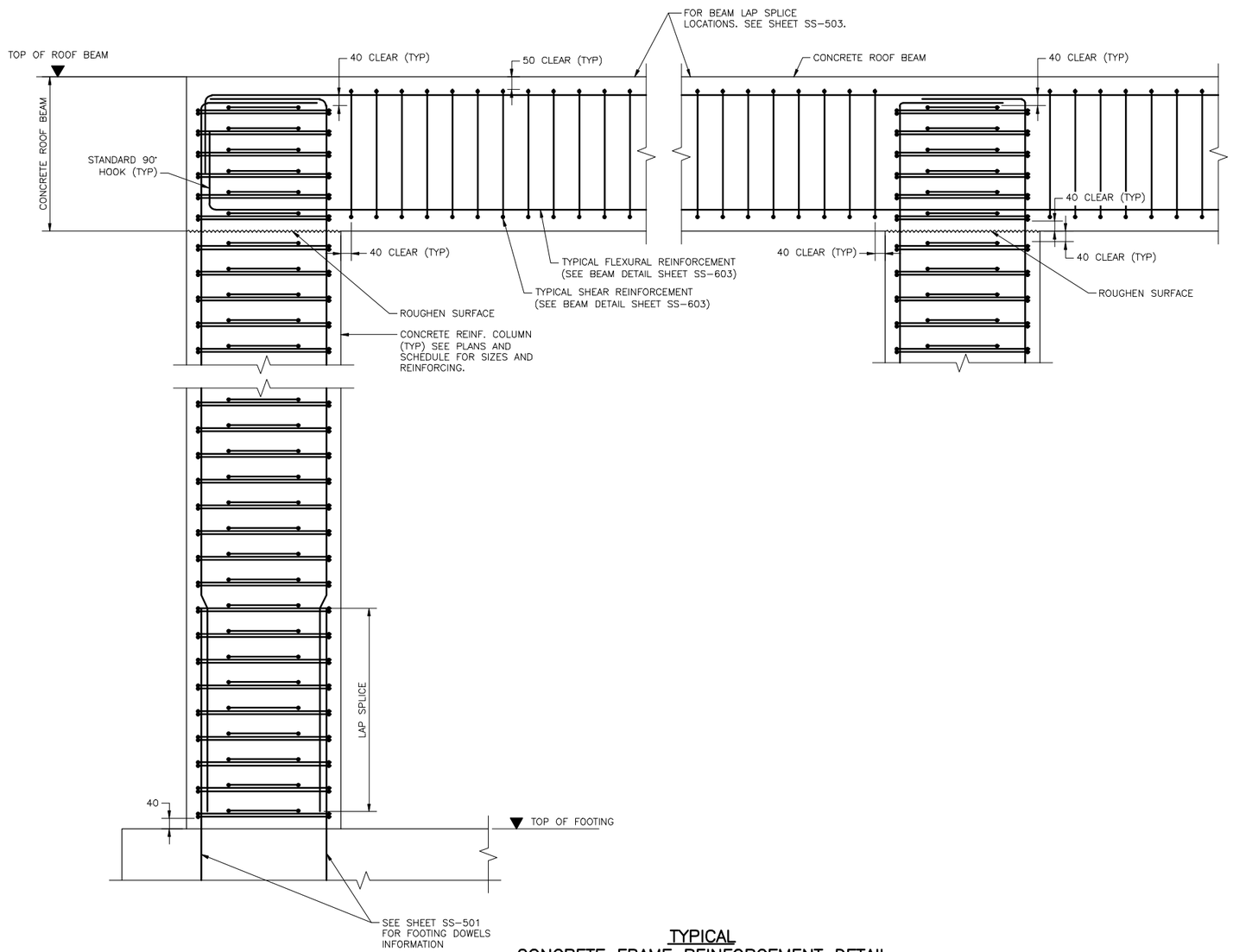

TYPICAL
CONCRETE FRAME REINFORCEMENT DETAIL
SCALE 1:10

0 .50 1.00
1:10

THESE DRAWINGS ARE "NOT APPROVED FOR CONSTRUCTION" SINCE THESE ARE BASED UPON ASSUMED CONDITIONS. THE CONTRACTOR SHALL NOT PROCEED WITH CONSTRUCTION UNTIL THE ASSUMED CONDITIONS ARE VALIDATED AND APPROVAL IS RECEIVED FROM THE CONTRACTING OFFICER.

COMMONWEALTH OF MASSACHUSETTS
QING ZHONG
STRUCTURAL
No. 46653
REGISTERED PROFESSIONAL ENGINEER

2/6/2012

UNLESS OTHERWISE NOTED, LINEAR DIMENSIONS SHOWN ARE IN MILLIMETERS.

DESIGN COMPLETE SUBMITTAL

SYMB	DESCRIPTION	DATE	
FNL	DESIGN COMPLETE SUBMITTAL	02-06-12	JZ APR

DESIGNED BY: RB
DATE: 02-06-2012
DRAWN BY: GRN
SUBMITTED BY: TETRA TECH
CHECKED BY: JZ
FILE NO.: AF1202$-SS504DT

TETRA TECH

US Army Corps of Engineers
Middle East District

COMMAND & CONTROL FACILITY
KANDAHAR AIR FIELD, AFGHANISTAN
STANDARD DRAWINGS
BEAM AND COLUMN DETAILS
SHEET 2 OF 2

SHEET REFERENCE NUMBER:
$
SS-504

W:\23308\127-23308-11004\CAD\MED Drawings\AF1202\Standards\Structural\AF1202$-SS504DT.dwg 3/7/2012 10:02:46 AM Jeffers, Scott

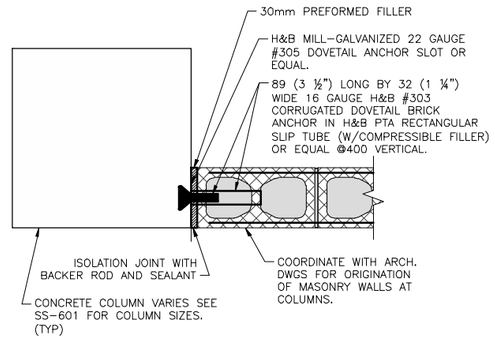

TYPICAL END CONDITION AT COLUMN HORIZONTAL SECTION

SCALE 1:10

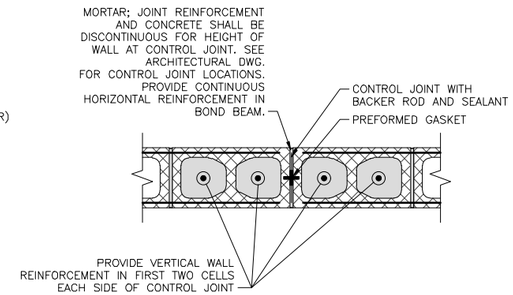

CONTROL JOINT DETAIL AT STRAIGHT WALL

SCALE 1:10

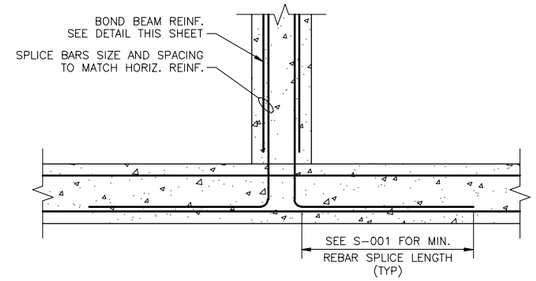

BOND BEAM INTERSECTION

SCALE 1:10

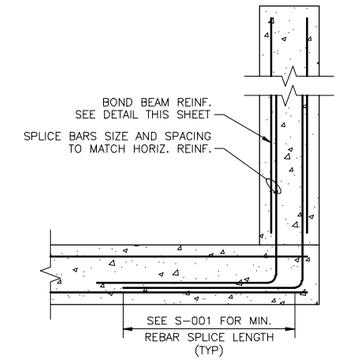

BOND BEAM CORNER AND END WALL

SCALE 1:10

MASONRY LAP AND EMBEDMENT SCHEDULE	
BAR SIZE	LAP
6 ø	400mm
10 ø	400mm
12 ø	470mm
16 ø	620mm
20 ø	1120mm
22 ø	1370mm
25 ø	2070mm

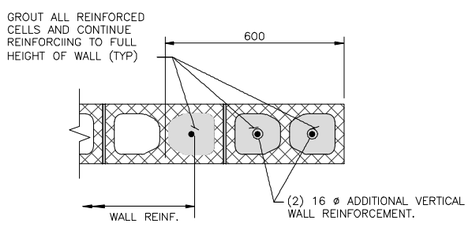

JAMB DETAIL

SCALE 1:10

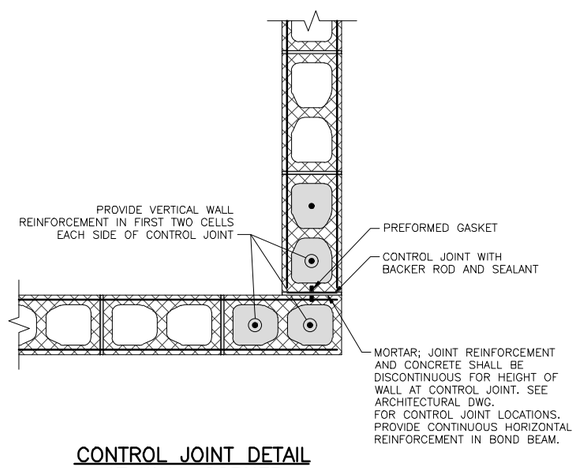

CONTROL JOINT DETAIL AT WALL CORNER

SCALE 1:10

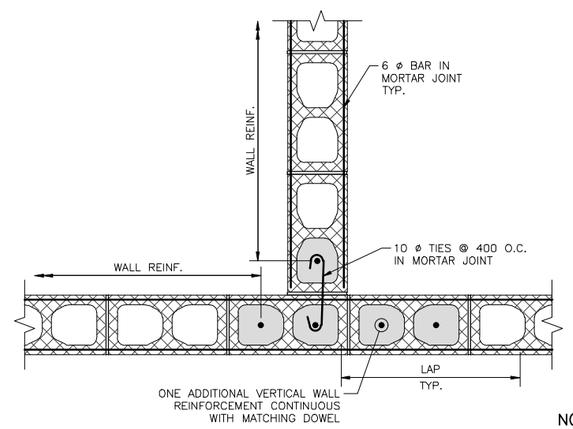

TYPICAL CMU WALL INTERSECTION

SCALE 1:10

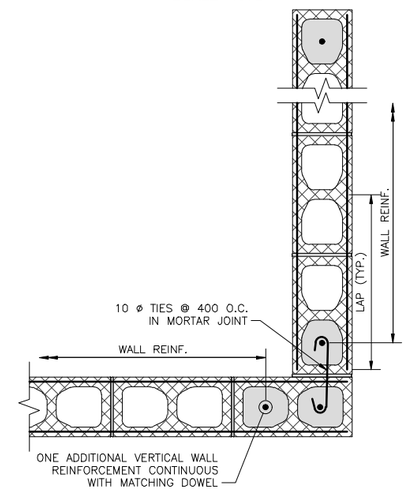

NOTE: REINFORCED MASONRY UNIT CELLS SHALL BE GROUTED FULLY.

TYPICAL CMU WALL CORNER

SCALE 1:10

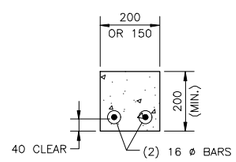

NOTE: FOR BOND BEAM CONSTRUCTION JOINT SEE SHEET SS-604 TYPICAL BEAM CONSTRUCTION JOINT (SIMILAR).

CONCRETE BOND BEAM REINFORCEMENT DETAILS

SCALE 1:10

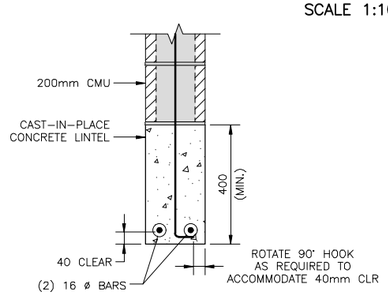

FOR SPAN ≤ 3000mm

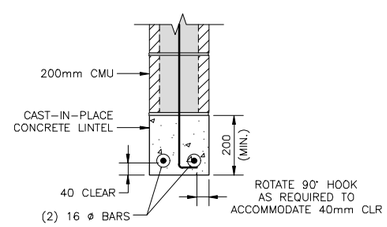

FOR SPAN ≤ 2000mm

CONCRETE LINTEL REINFORCEMENT DETAIL

SCALE 1:10

CONCRETE LINTEL NOTES:

1. PROVIDE 600mm MINIMUM BEARING AT EACH SIDE OF CLEAR SPAN (TYP).
2. IF FULL 600mm LINTEL BEARING LENGTH IS NOT AVAILABLE, EXTEND THE LINTEL AS FAR AS POSSIBLE, PROVIDING A 90° HOOK AT THE END OF THE HORIZONTAL REINFORCEMENT.
3. VERTICAL REINFORCEMENT SHALL BE CONTINUOUS THROUGH BOND BEAMS AND LINTELS.
4. CONTROL JOINTS SHALL NOT PASS THROUGH LINTELS. AT LINTELS, OFFSET CONTROL JOINT TO THE END OF REQUIRED LINTEL BEARING AREA.
5. REFER TO ARCHITECTURAL AND MECHANICAL DRAWINGS FOR LOCATIONS OF MASONRY OPENINGS U.N.O.

0 .50 1.00
1:10

THESE DRAWINGS ARE "NOT APPROVED FOR CONSTRUCTION" SINCE THESE ARE BASED UPON ASSUMED CONDITIONS. THE CONTRACTOR SHALL NOT PROCEED WITH CONSTRUCTION UNTIL THE ASSUMED CONDITIONS ARE VALIDATED AND APPROVAL IS RECEIVED FROM THE CONTRACTING OFFICER.

COMMONWEALTH OF MASSACHUSETTS QING ZHONG STRUCTURAL No. 48893 REGISTERED PROFESSIONAL ENGINEER

2/6/2012

UNLESS OTHERWISE NOTED, LINEAR DIMENSIONS SHOWN ARE IN MILLIMETERS.

DESIGN COMPLETE SUBMITTAL

SYMB	DESCRIPTION	DATE	APR
FNL	DESIGN COMPLETE SUBMITTAL	02-06-12	JZ

DESIGNED BY: RB
DRAWN BY: GRN
CHECKED BY: JZ
DATE: 02-06-2012
SUBMITTED BY: TETRA TECH
FILE NO.: AF1202$-SS505DT

TETRA TECH

US Army Corps of Engineers Middle East District

COMMAND & CONTROL FACILITY
KANDAHAR AIR FIELD, AFGHANISTAN
STANDARD DRAWINGS
CMU WALL SECTIONS AND DETAILS
SHEET 1 OF 2

SHEET REFERENCE NUMBER:
$
SS-505

W:\23308\127-23308-11004\CAD\MED Drawings\AF1202\Standards\Structural\AF1202$-SS505DT.dwg 3/7/2012 10:03:18 AM Jeffers, Scott

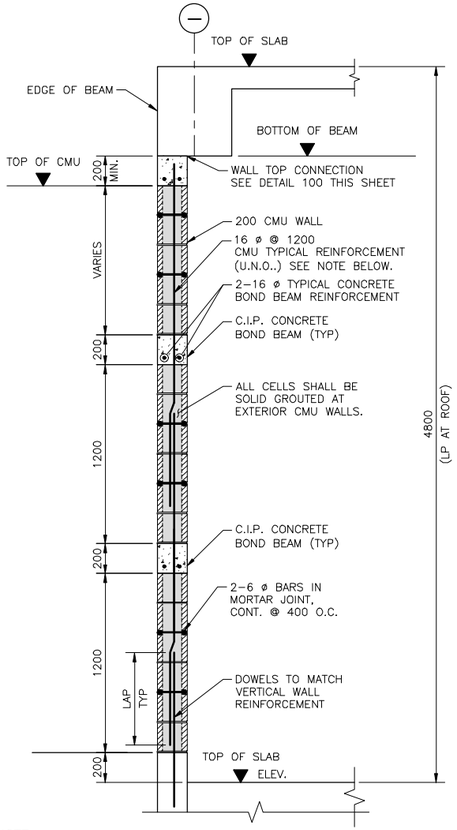

NOTE:
FOR COMMAND AND CONTROL FACILITY. ALONG GRID LINE F, PROVIDE 16 ø @ 1000 VERTICAL REINFORCEMENT IN EXTERIOR CMU WALL.

TYPICAL EXTERIOR CMU WALL DETAIL
SCALE 1:20

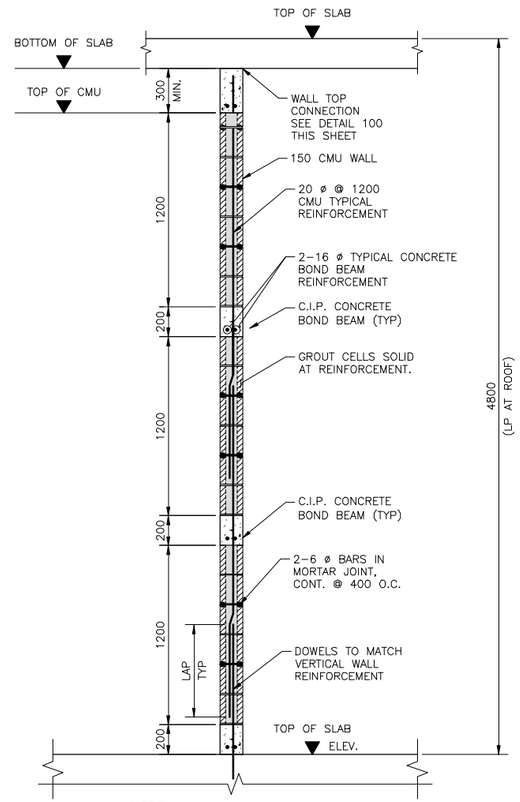

NOTE:
SEE ARCH. PLANS FOR LOCATION.

TYPICAL 150mm INTERIOR CMU WALL DETAIL
SCALE 1:20

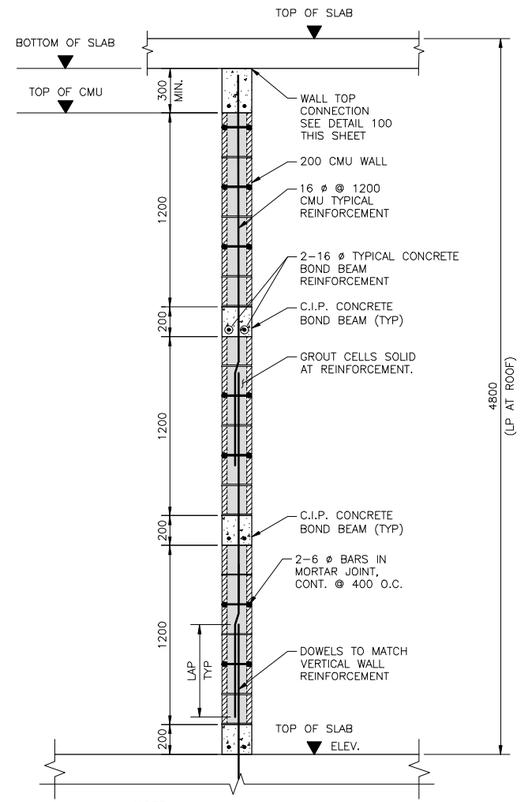

NOTE:
SEE ARCH. PLANS FOR LOCATION.

TYPICAL 200mm INTERIOR CMU WALL DETAIL
SCALE 1:20

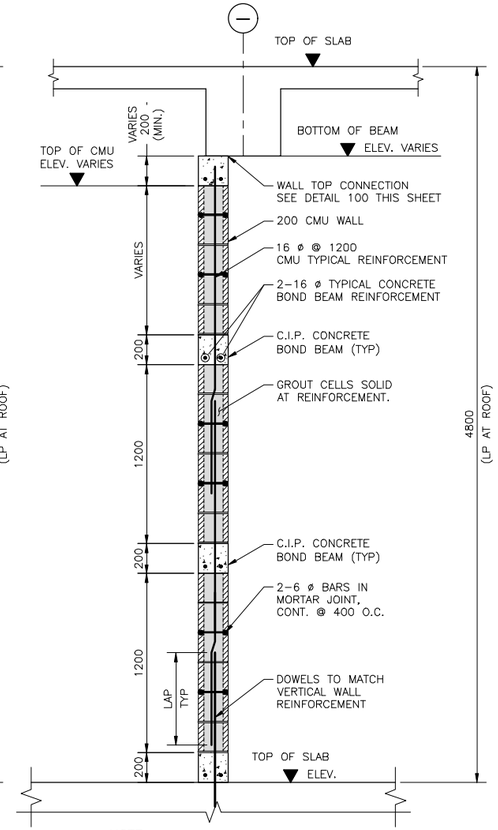

NOTE:
SEE ARCH. PLANS FOR LOCATION.

TYPICAL INTERIOR CMU WALL BELOW INTERIOR BEAM DETAIL
SCALE 1:20

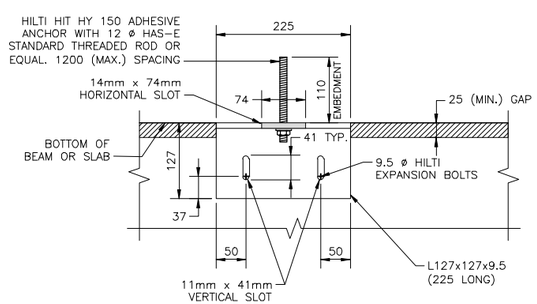

SECTION A1
SCALE 1:5 SS-506 | SS-506

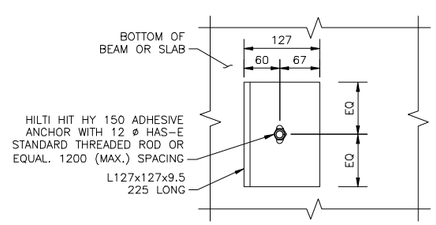

NOTE: BOND BEAM NOT SHOWN FOR CLARITY.

SECTION A2
SCALE 1:5 SS-506 | SS-506

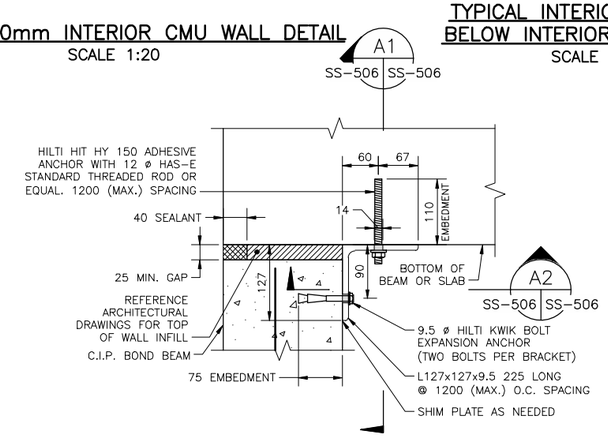

NOTE: ANGLE SHOULD BE PLACED ON THE NON-CORRIDOR SIDE OF THE WALLS.

CMU WALL TOP CONNECTION BRACKET DETAIL
SCALE 1:5 100 | SS-506 | SS-506

1 .50 0 1
1:20
0 .10 .20 .30 .40 .50
1:5

THESE DRAWINGS ARE "NOT APPROVED FOR CONSTRUCTION" SINCE THESE ARE BASED UPON ASSUMED CONDITIONS. THE CONTRACTOR SHALL NOT PROCEED WITH CONSTRUCTION UNTIL THE ASSUMED CONDITIONS ARE VALIDATED AND APPROVAL IS RECEIVED FROM THE CONTRACTING OFFICER.

COMMONWEALTH OF MASSACHUSETTS
QING ZHONG STRUCTURAL No. 46653
REGISTERED PROFESSIONAL ENGINEER
2/6/2012

UNLESS OTHERWISE NOTED, LINEAR DIMENSIONS SHOWN ARE IN MILLIMETERS.

DESIGN COMPLETE SUBMITTAL

SYMB	DESCRIPTION	DATE	APR
FNL	DESIGN COMPLETE SUBMITTAL	02-06-12	JZ

DESIGNED BY: RB
DATE: 02-06-2012
DRAWN BY: GRN
SUBMITTED BY: TETRA TECH
CHECKED BY: JZ
FILE NO.: AF1202$-SS506DT

TETRA TECH

US Army Corps of Engineers
Middle East District

COMMAND & CONTROL FACILITY
KANDAHAR AIR FIELD, AFGHANISTAN
STANDARD DRAWINGS
CMU WALL SECTIONS AND DETAILS
SHEET 2 OF 2

SHEET REFERENCE NUMBER:
$
SS-506

W:\23308\127-23308-11004\CAD\MED Drawings\AF1202\Standards\Structural\AF1202$-SS506DT.dwg 3/7/2012 10:03:51 AM Jeffers, Scott

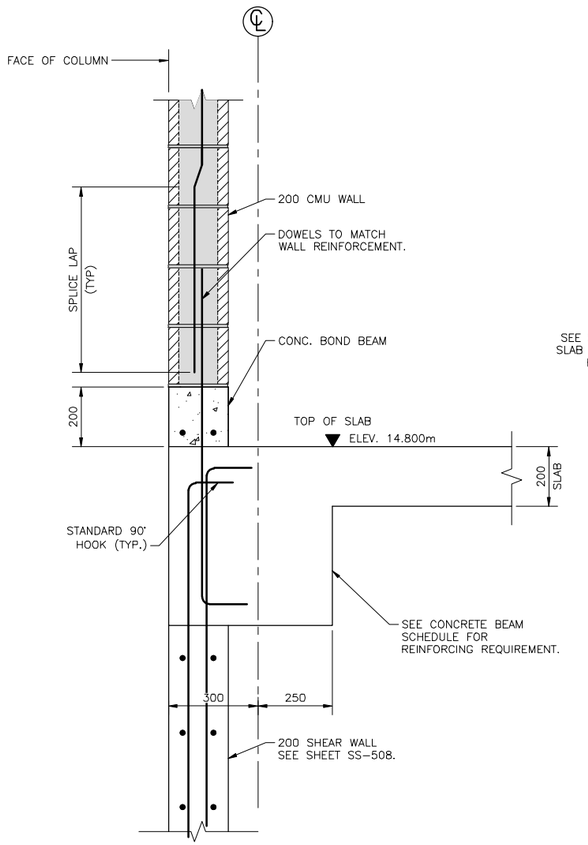

TYPICAL EXTERIOR SHEAR WALL SECTION
SCALE 1:10
I
S-102 SS-507

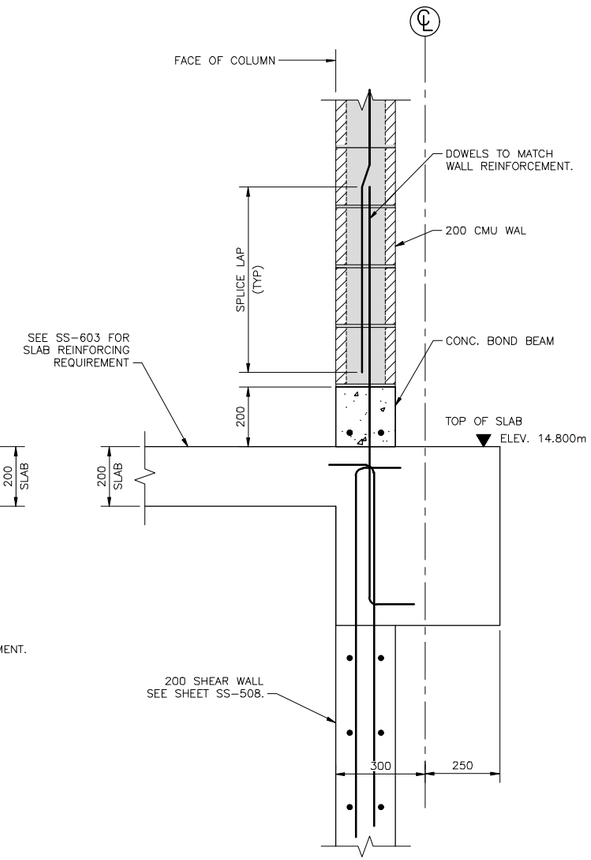

INTERIOR SHEAR WALL SECTION
SCALE 1:10
J
S-102 SS-507

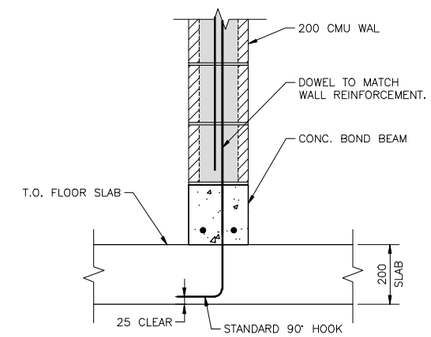

CMU DETAIL AT FLOOR
SCALE 1:10

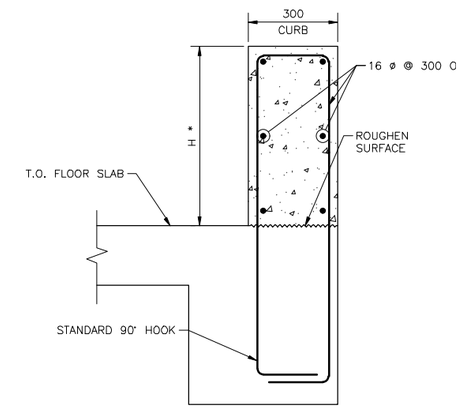

STAIRWAY SUPPORT DETAIL
SCALE 1:10

NOTE:

* CONTRACTOR TO COORDINATE CURB LOCATION AND HEIGHT WITH STAIRWAY.

0 .50 1.00
1:10

THESE DRAWINGS ARE "NOT APPROVED FOR CONSTRUCTION" SINCE THESE ARE BASED UPON ASSUMED CONDITIONS. THE CONTRACTOR SHALL NOT PROCEED WITH CONSTRUCTION UNTIL THE ASSUMED CONDITIONS ARE VALIDATED AND APPROVAL IS RECEIVED FROM THE CONTRACTING OFFICER.

2/6/2012

UNLESS OTHERWISE NOTED, LINEAR DIMENSIONS SHOWN ARE IN MILLIMETERS.

DESIGN COMPLETE SUBMITTAL

SYMB	DESCRIPTION	DATE	APR
FNL	DESIGN COMPLETE SUBMITTAL	02-06-12	JZ

DESIGNED BY: RB
DATE: 02-06-2012
DRAWN BY: GRN
SUBMITTED BY: TETRA TECH
CHECKED BY: JZ
FILE NO.: AF1202$-SS507DT

TETRA TECH

US Army Corps of Engineers
Middle East District

COMMAND & CONTROL FACILITY
KANDAHAR AIR FIELD, AFGHANISTAN
STANDARD DRAWINGS
CMU AND SHEAR WALL SECTIONS AND DETAILS

SHEET REFERENCE NUMBER:
$
SS-507

W:\23308\127-23308-11004\CAD\MED Drawings\AF1202\Standards\Structural\AF1202$-SS507DT.dwg 3/7/2012 10:04:23 AM Jeffers, Scott

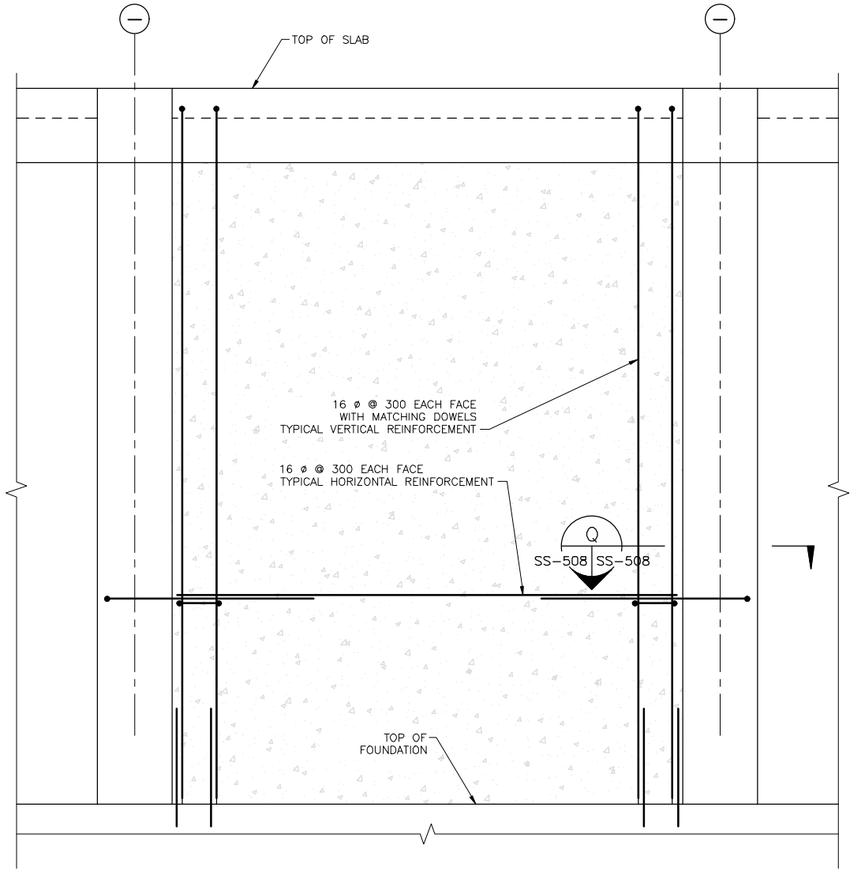

200 CONCRETE SHEAR WALL TYPICAL REINFORCEMENT/ADDITIONAL REINFORCING DETAILS AT WALL OPENING

SCALE N.T.S.

NOTES:

1. SEE FOUNDATION PLANS OF THE COMMAND CONTROL FACILITY FOR LOCATION OF THE SHEAR WALLS.
2. FOR WALL BOTTOM CONNECTION TO THE FOUNDATION SEE SHEET SS-501.
3. FOR WALL TOP CONNECTION SEE SECTION ON SHEET SS-507.
4. LAP SPLICE LENGTH IN ACCORDANCE WITH SPLICE NOTES ON SHEET SS-001.

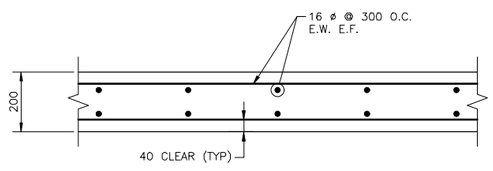

TYPICAL CONCRETE SHEAR WALL REINFORCEMENT DETAIL

SCALE 1:10

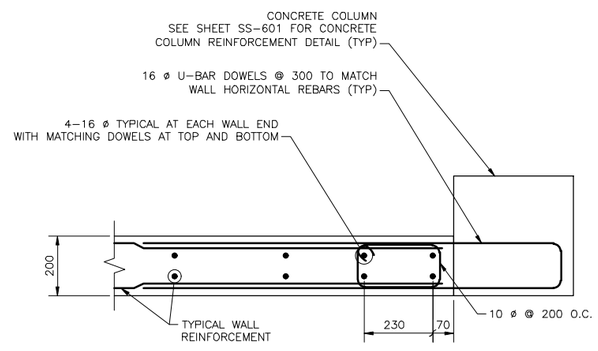

200 CONCRETE SHEAR WALL TYPICAL END REINFORCEMENT SECTION

SCALE 1:10

Q
SS-201 SS-201

0 .50 1.00
1:10

THESE DRAWINGS ARE "NOT APPROVED FOR CONSTRUCTION" SINCE THESE ARE BASED UPON ASSUMED CONDITIONS. THE CONTRACTOR SHALL NOT PROCEED WITH CONSTRUCTION UNTIL THE ASSUMED CONDITIONS ARE VALIDATED AND APPROVAL IS RECEIVED FROM THE CONTRACTING OFFICER.

COMMONWEALTH OF MASSACHUSETTS
QING ZHONG
STRUCTURAL
No. 48899
REGISTERED PROFESSIONAL ENGINEER

2/6/2012

UNLESS OTHERWISE NOTED, LINEAR DIMENSIONS SHOWN ARE IN MILLIMETERS.

DESIGN COMPLETE SUBMITTAL

SYMB	DESCRIPTION	DATE	APR
FNL	DESIGN COMPLETE SUBMITTAL	02-06-12	JZ

DESIGNED BY: RB
DRAWN BY: GRN
CHECKED BY: JZ
DATE: 02-06-2012
SUBMITTED BY: TETRA TECH
FILE NO.: AF1202$-SS508DT

TETRA TECH

US Army Corps of Engineers
Middle East District

COMMAND & CONTROL FACILITY
KANDAHAR AIR FIELD, AFGHANISTAN
STANDARD DRAWINGS
CONCRETE SHEAR WALL ELEVATION DETAIL AND SECTIONS

SHEET REFERENCE NUMBER:
$
SS-508

W:\23308\127-23308-11004\CAD\MED Drawings\AF1202\Standards\Structural\AF1202$-SS508DT.dwg 3/7/2012 10:04:53 AM Jeffers, Scott

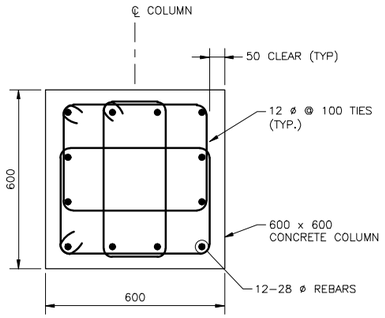

CONCRETE COLUMN TYPE C1 SECTION

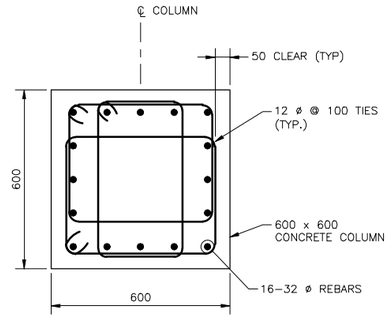

CONCRETE COLUMN TYPE C2 SECTION

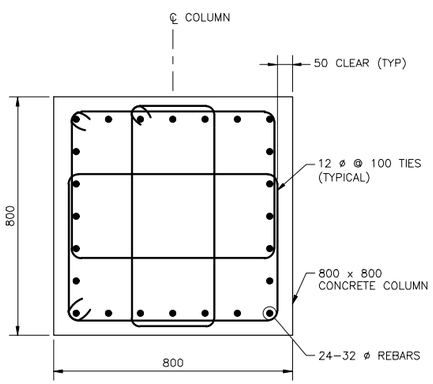

CONCRETE COLUMN TYPE C4 SECTION

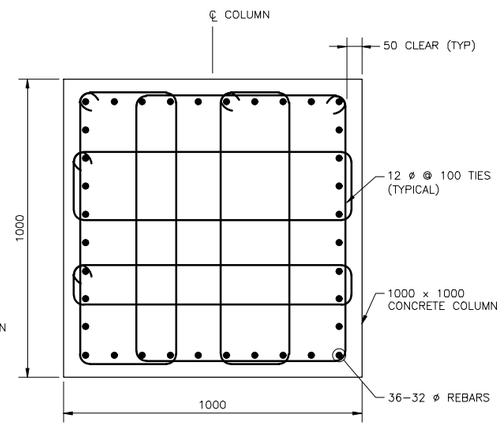

CONCRETE COLUMN TYPE C5 SECTION

TYPICAL CONCRETE COLUMN DETAIL

SCALE 1:10

CONCRETE COLUMN SCHEDULE					
COLUMN TYPE	WIDTH	DEPTH	LONGITUDINAL REBAR	TIES	LOCATION
C1	600	600	12-28 ø	12 ø @ 100 O.C.	TYPICAL U.N.O.
C2	600	600	16-32 ø	12 ø @ 100 O.C.	SEE PLANS
C4	800	800	24-32 ø	12 ø @ 100 O.C.	SEE PLANS
C5	1000	1000	36-32 ø	12 ø @ 100 O.C.	SEE PLANS

0 .50 1.00
1:10

THESE DRAWINGS ARE "NOT APPROVED FOR CONSTRUCTION" SINCE THESE ARE BASED UPON ASSUMED CONDITIONS. THE CONTRACTOR SHALL NOT PROCEED WITH CONSTRUCTION UNTIL THE ASSUMED CONDITIONS ARE VALIDATED AND APPROVAL IS RECEIVED FROM THE CONTRACTING OFFICER.

COMMONWEALTH OF MASSACHUSETTS
QING ZHONG
STRUCTURAL
No. 48893
REGISTERED PROFESSIONAL ENGINEER

2/6/2012

UNLESS OTHERWISE NOTED, LINEAR DIMENSIONS SHOWN ARE IN MILLIMETERS.

DESIGN COMPLETE SUBMITTAL

SYMB	DESCRIPTION	DATE	APR
FNL	DESIGN COMPLETE SUBMITTAL	02-06-12	JZ

DESIGNED BY: RB
DATE: 02-06-2012
DRAWN BY: GRN
SUBMITTED BY: TETRA TECH
CHECKED BY: JZ
FILE NO.: AF1202$-SS601SC

TETRA TECH

US Army Corps of Engineers
Middle East District

COMMAND & CONTROL FACILITY
KANDAHAR AIR FIELD, AFGHANISTAN
STANDARD DRAWINGS
SCHEDULES AND DETAILS
SHEET 1 OF 4

SHEET REFERENCE NUMBER:
$
SS-601

W:\23308\127-23308-11004\CAD\MED Drawings\AF1202\Standards\Structural\AF1202$-SS601SC.dwg 3/7/2012 10:05:51 AM Jeffers, Scott

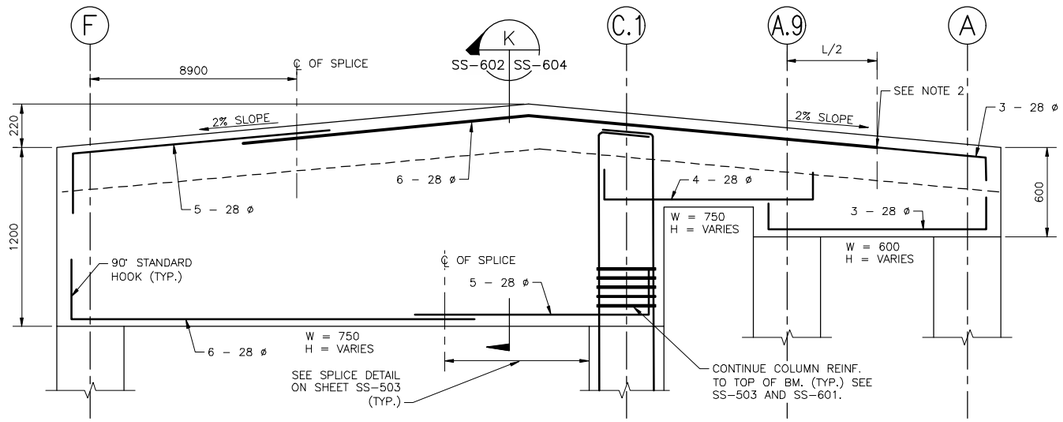

BEAM B23C ELEVATION

CONCRETE BEAM ELEVATIONS

SCALE NTS

SEE SCHEDULE FOR BAR SIZES.

CONCRETE BEAM SCHEDULE

BEAM TYPE	WIDTH 'W'	HEIGHT 'H'	TOP BARS 'T'	BOTTOM BARS 'B'	STIRRUPS 'S' TYPICAL U.N.O.	STIRRUPS AT SPLICE LOCATIONS	REMARKS
B3	500	600	3 – 16 ø	3 – 20 ø	10 ø @ 210 O.C.		GRAVITY BEAM
B4	550	600	4 – 20 ø	3 – 20 ø	12 ø @ 100 O.C.		FRAME BEAM
B5	550	600	4 – 20 ø	4 – 20 ø	12 ø @ 100 O.C.		FRAME BEAM
B6	500	600	4 – 20 ø	4 – 20 ø	10 ø @ 210 O.C.		GRAVITY BEAM
B7	500	600	4 – 20 ø	4 – 20 ø	12 ø @ 100 O.C.		FRAME BEAM
B14	500	500	4 – 28 ø	4 – 20 ø	10 ø @ 210 O.C.		GRAVITY BEAM
B19C	500	940	3 – 28 ø	6 – 28 ø	10 ø @ 210 O.C.		GRAVITY BEAM, SKIN REINF. 16 ø @ 225 O.C. SEE DETAIL ON SS-604
B23C	VARIES	VARIES	SEE ELEVATION FOR REINFORCING		12 ø @ 150 O.C.	12 ø @ 100 O.C	FRAME BEAM, SKIN REINF. 10 ø @ 225 O.C. SEE DETAIL ON SS-604
B24	500	1100	3 – 25 ø	4 – 20 ø	12 ø @ 150 O.C.	12 ø @ 100 O.C	FRAME BEAM, SKIN REINF. 20 ø @ 225 O.C. SEE DETAIL ON SS-604
B25	550	1100	3 – 25 ø	4 – 20 ø	12 ø @ 150 O.C.	12 ø @ 100 O.C	FRAME BEAM, SKIN REINF. 20 ø @ 225 O.C. SEE DETAIL ON SS-604
B26	550	450	4 – 20 ø	4 – 20 ø	12 ø @ 90 O.C.		FRAME BEAM
B27	500	450	4 – 20 ø	4 – 20 ø	12 ø @ 90 O.C.		FRAME BEAM
B28	500	500	4 – 20 ø	4 – 20 ø	10 ø @ 210 O.C.		GRAVITY BEAM
B29	500	500	4 – 20 ø	4 – 20 ø	10 ø @ 210 O.C.		GRAVITY BEAM
B30	550	400	4 – 20 ø	4 – 20 ø	12 ø @ 100 O.C.		FRAME BEAM
B31	500	400	4 – 20 ø	4 – 20 ø	12 ø @ 100 O.C.		FRAME BEAM

NOTE:

1. FOR ADDITIONAL CONCRETE BEAM REINFORCEMENT DETAILS SEE SHEET SS-603.
2. TERMINATION POINT OF ADDITIONAL REINFORCEMENT. CONTINUE REQUIRED REINFORCEMENT ONLY.
3. B#* = INDICATES BEAMS WITH (2) 20 ø AT MIDDLE. SEE SS-603 FOR DETAIL. SEE FRAMING PLANS FOR LOCATIONS.

THESE DRAWINGS ARE "NOT APPROVED FOR CONSTRUCTION" SINCE THESE ARE BASED UPON ASSUMED CONDITIONS. THE CONTRACTOR SHALL NOT PROCEED WITH CONSTRUCTION UNTIL THE ASSUMED CONDITIONS ARE VALIDATED AND APPROVAL IS RECEIVED FROM THE CONTRACTING OFFICER.

QING ZHONG. STRUCTURAL No. 46853 REGISTERED PROFESSIONAL ENGINEER

2/6/2012

UNLESS OTHERWISE NOTED, LINEAR DIMENSIONS SHOWN ARE IN MILLIMETERS.

DESIGN COMPLETE SUBMITTAL

SYMB	DESCRIPTION	DATE	APR
FNL	DESIGN COMPLETE SUBMITTAL	02-06-12	JZ

DESIGNED BY: RB
DATE: 02-06-2012
DRAWN BY: GRN
SUBMITTED BY: TETRA TECH
CHECKED BY: JZ
FILE NO.: AF1202$-SS602SC

TETRA TECH

US Army Corps of Engineers
Middle East District

COMMAND & CONTROL FACILITY
KANDAHAR AIR FIELD, AFGHANISTAN
STANDARD DRAWINGS
SCHEDULES AND DETAILS
SHEET 2 OF 4

SHEET REFERENCE NUMBER:
$
SS-602

W:\2330\127-23308-11004\CAD\MED Drawings\AF1202\Standards\Structural\AF1202$-SS602Sc.dwg 3/7/2012 10:06:20 AM Jeffers, Scott

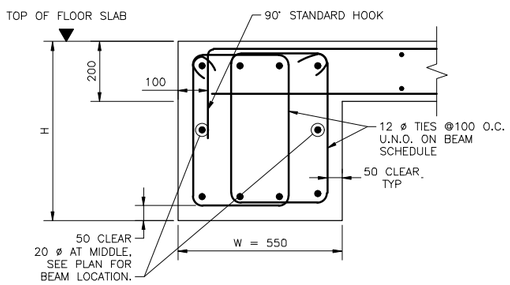

AT EDGE FRAME BEAM SECTION

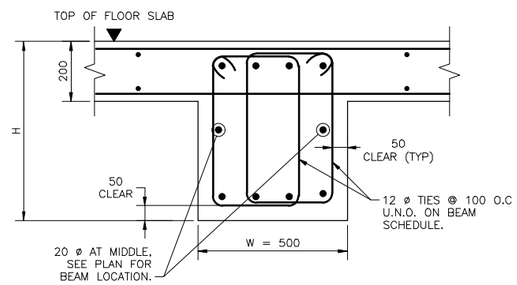

AT INTERIOR FRAME BEAM SECTION

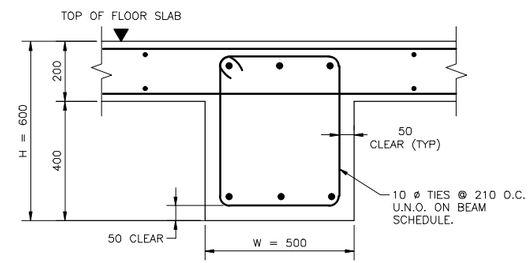

AT INTERMEDIATE GRAVITY BEAM SECTION

TYPICAL CONCRETE FLOOR BEAM DETAILS

SCALE 1:10

NOTE:
FOR ADDITIONAL CONCRETE BEAM REINFORCEMENT INFORMATION SEE SHEET SS-602 CONCRETE BEAM SCHEDULE.

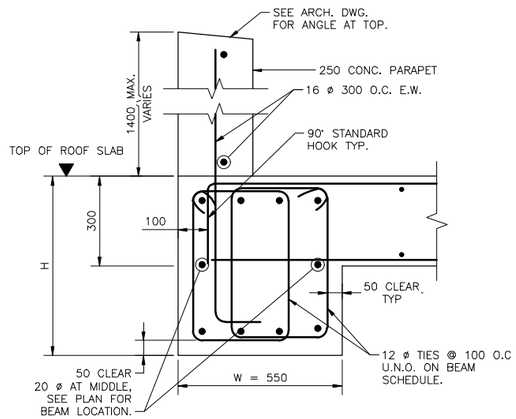

AT EDGE FRAME BEAM SECTION

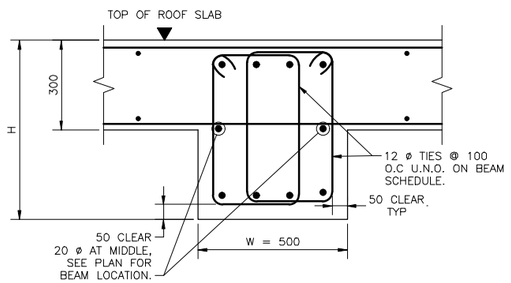

AT INTERIOR FRAME BEAM SECTION

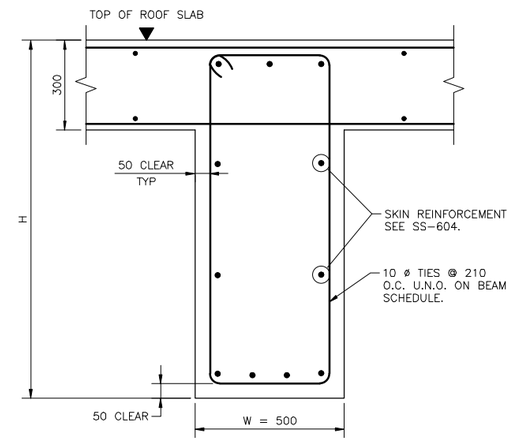

AT INTERMEDIATE GRAVITY BEAM SECTION

TYPICAL CONCRETE ROOF BEAM DETAILS

SCALE 1:10

NOTE:
FOR ADDITIONAL CONCRETE BEAM REINFORCEMENT INFORMATION SEE SHEET SS-602 CONCRETE BEAM SCHEDULE.

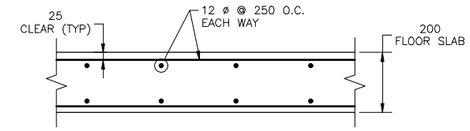

FLOOR SLAB (S1) TYPICAL REINFORCEMENT DETAIL

SCALE 1:10

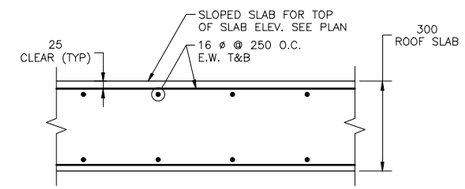

ROOF SLAB (S2) TYPICAL REINFORCEMENT DETAIL

SCALE 1:10

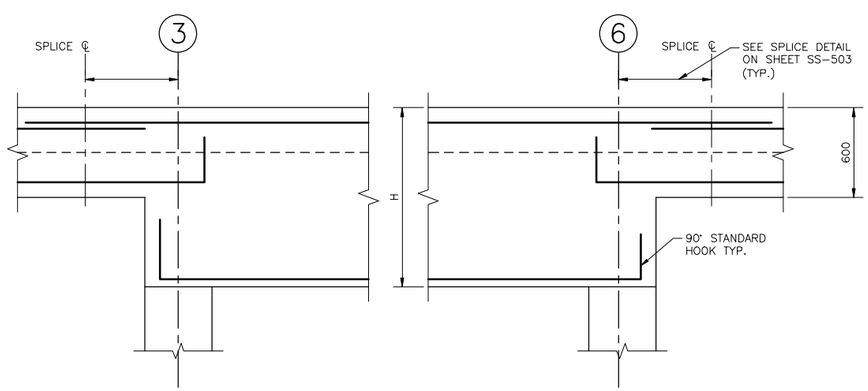

BEAM B24, B25 ELEVATION

CONCRETE BEAM ELEVATIONS

SCALE NTS

NOTE: SEE SCHEDULE ON SS-602 FOR BAR SIZES.

0 .50 1.00
1:10

THESE DRAWINGS ARE "NOT APPROVED FOR CONSTRUCTION" SINCE THESE ARE BASED UPON ASSUMED CONDITIONS. THE CONTRACTOR SHALL NOT PROCEED WITH CONSTRUCTION UNTIL THE ASSUMED CONDITIONS ARE VALIDATED AND APPROVAL IS RECEIVED FROM THE CONTRACTING OFFICER.

COMMONWEALTH OF MASSACHUSETTS
QING ZHONG
STRUCTURAL
No. 48893
REGISTERED PROFESSIONAL ENGINEER
2/6/2012

UNLESS OTHERWISE NOTED, LINEAR DIMENSIONS SHOWN ARE IN MILLIMETERS.

DESIGN COMPLETE SUBMITTAL

SYMB	DESCRIPTION	DATE	APR
FNL	DESIGN COMPLETE SUBMITTAL	02-06-12	JZ

DESIGNED BY: RB
DATE: 02-06-2012
DRAWN BY: GRN
SUBMITTED BY: TETRA TECH
CHECKED BY: JZ
FILE NO.: AF1202$-SS603SC

TETRA TECH

US Army Corps of Engineers
Middle East District

COMMAND & CONTROL FACILITY
KANDAHAR AIR FIELD, AFGHANISTAN
STANDARD DRAWINGS
SCHEDULES AND DETAILS
SHEET 3 OF 4

SHEET REFERENCE NUMBER:
$
SS-603

W:\23308\127-23308-11004\CAD\MED Drawings\AF1202\Standards\Structural\AF1202$-SS603SC.dwg 3/7/2012 10:06:56 AM Jeffers, Scott

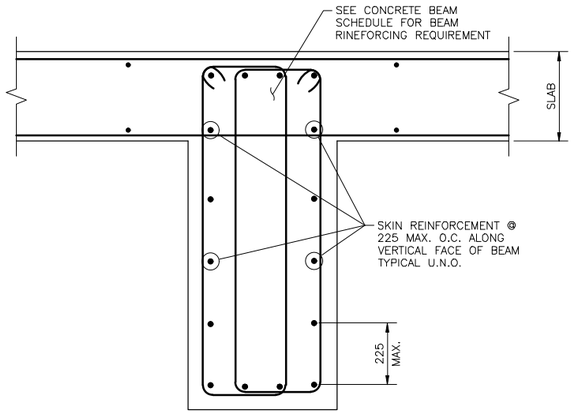

TYPICAL SKIN REINFOREMENT DETAIL FOR BEAM DEPTH > 900

SCALE 1:10

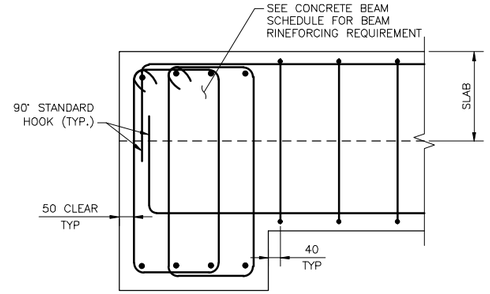

BEAM TO BEAM CONNECTION DETAIL

SCALE 1:10

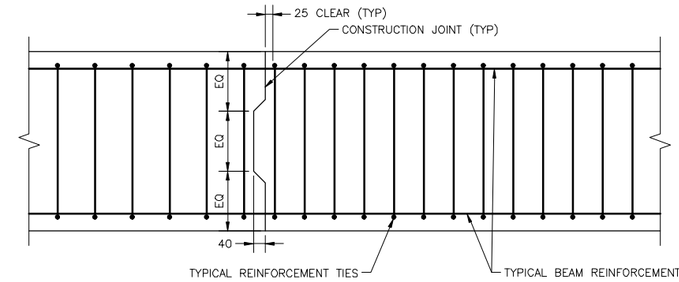

TYPICAL BEAM CONSTRUCTION JOINT SECTION

N.T.S.

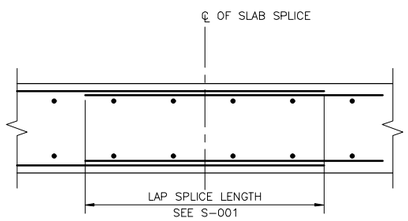

TYPICAL SLAB SPLICE DETAIL

N.T.S.

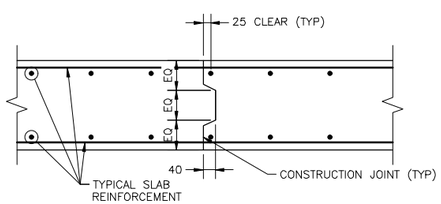

TYPICAL SLAB CONSTRUCTION JOINT DETAIL

N.T.S.

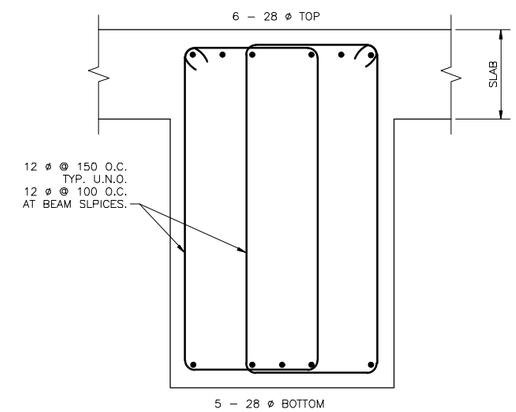

SECTION K SS-602 SS-604

SCALE 1:10

0 .50 1.00

1:10

THESE DRAWINGS ARE "NOT APPROVED FOR CONSTRUCTION" SINCE THESE ARE BASED UPON ASSUMED CONDITIONS. THE CONTRACTOR SHALL NOT PROCEED WITH CONSTRUCTION UNTIL THE ASSUMED CONDITIONS ARE VALIDATED AND APPROVAL IS RECEIVED FROM THE CONTRACTING OFFICER.

QING ZHONG STRUCTURAL No. 46653 REGISTERED PROFESSIONAL ENGINEER

2/6/2012

UNLESS OTHERWISE NOTED, LINEAR DIMENSIONS SHOWN ARE IN MILLIMETERS.

DESIGN COMPLETE SUBMITTAL

SYMB	DESCRIPTION	DATE	APR
FNL	DESIGN COMPLETE SUBMITTAL	02-06-12	JZ

DESIGNED BY: RB
DATE: 02-06-2012
DRAWN BY: GRN
SUBMITTED BY: TETRA TECH
CHECKED BY: JZ
FILE NO.: AF1202$-SS604SC

TETRA TECH

US Army Corps of Engineers Middle East District

COMMAND & CONTROL FACILITY
KANDAHAR AIR FIELD, AFGHANISTAN
STANDARD DRAWINGS
SCHEDULES AND DETAILS
SHEET 4 OF 4

SHEET REFERENCE NUMBER:
$
SS-604

W:\23308\127-23308-11004\CAD\MED Drawings\AF1202\Standards\Structural\AF1202$-SS604SC.dwg 3/7/2012 10:07:24 AM Jeffers, Scott

SYMBOLS

STANDARD REFERENCE BUBBLE
- DETAIL NUMBER
- SHEET DETAIL IS LOCATED ON
- SHEET(S) DETAIL IS CALLED OUT ON

4 / A–005 A–006

FLOOR PLAN
SCALE 1:100
- DRAWING TITLE AND SCALE

BUILDING / WALL SECTION
- DETAIL LETTER
- SHEET DETAIL IS LOCATED ON
- SHEET(S) DETAIL IS CALLED OUT ON

A / A–104 A–105

EXTERIOR ELEVATION
- DETAIL NUMBER
- SHEET ELEVATION IS LOCATED ON
- SHEET(S) DETAIL IS CALLED OUT ON

4 / A–104 A–105

4 / A–104 A–105
- DETAIL

INTERIOR ELEVATION
- DETAIL NUMBER
- SHEET DETAIL IS LOCATED ON

1 / 2 / 3 / 4 / DWG

OFFICE 100
- ROOM NAME AND NUMBER

F
- COLUMN CENTER LINE

CUT LINE

CENTER LINE

100.000m T.O.
- ELEVATION IN RELATION TO BENCHMARK

PARTIAL HEIGHT CMU WALL

CMU WALL

CONCRETE WALL

A1
- PARTITION TYPE

105
- SINGLE SWING DOOR AND DOOR TAG

DOOR SYMBOL (ELEVATION)
- HINGE SIDE

LADDER AND ROOF SCUTTLE

ROOF SYMBOLS

- PLUMBING VENT
- DOWNSPOUT
- ROOF HATCH SYMBOL (PLAN)
  - HINGE SIDE

ABBREVIATIONS

REFER TO ROOM FINISH LEGEND FOR ADDITIONAL ABBREVIATIONS

ACT	ACOUSTIC CEILING TILE
ADDL	ADDITIONAL
ADH	ADHESIVE
ADJ	ADJACENT
AFF	ABOVE FINISH FLOOR
ALUM	ALUMINUM
AHU	AIR HANDLING UNIT
APPROX	APPROXIMATE (LY)
ARCH	ARCHITECT (URAL)
AVE	AVERAGE
AWP	ACOUSTICAL WALL PANEL
B	BOTTOM
BD	BOARD
BLDG	BUILDING
BLK	BLOCKING/BLKG
BO	BY OTHERS
BOM	BOTTOM OF MASONRY
BOS	BOTTOM OF STRUCTURE
BS	BOTH SIDES, BOTTOM OF STAIR
CFT	CERAMIC MOSAIC TILE
CIP	CAST IN PLACE
CJ	CONTROL JOINT
CL	CENTER LINE
CLKG	CAULKING
CLR	CLEAR (ING) (ANCE)
CMT	CERAMIC MOSAIC TILE
CMU	CONCRETE MASONRY UNIT
COL	COLUMN
COM	COMMUNICATIONS
COMB	COMBINATION
COMP	COMPOSITE
CONC	CONCRETE
CONT	CONTINOUS
COORD	COORDINATE
CORR	CORRUGATED, CORRIDOR
CPT	CARPET
CT	CERAMIC TILE BASE
CTR	CENTER
CWT	CERAMIC WALL TILE
DET	DETAIL (ED)
DIA	DIAMETER
DIM	DIMENSION
DIST	DISTANCE
DN	DOWN
DR	DOOR
DWG(S)	DRAWING(S)
DS	DOWNSPOUT
DTL	DETAIL
EA	EACH
EJ	EXPANSION JOINT
ELEC	ELECTRIC (AL)
ELEV	ELEVATION
ENC	ENCLOSURE
EQ	EQUAL
EPDM	ETHYLENE PROPYLENE DIENE MONOMER
EPS	EXPOSED PAINTED STRUCTURE
ES	EXPOSED STRUCTURE
EW	EACH WAY
EXP	EXPANSION
EXT	EXTERIOR
FE	FIRE EXTINGUISHER
FEC	FIRE EXTINGUISHER CABINET
FF	FINISH FLOOR, FACTORY FINISH
FFE	FINISH FLOOR ELEVATION
FIN	FINISH (ED)
FLR, FL	FLOOR (ING)
FLUOR	FLUORESCENT
FND	FOUNDATION
FP	FIRE PROTECTION
GA	GAUGE
GALV	GALVANIZED
GND	GROUND
GWB	GYPSUM WALL BOARD
GYP	GYPSUM
H	HEIGHT
HDW	HARDWARE
HM (D)	HOLLOW METAL (DOOR)
HPL	HIGH PRESSURE LAMINATE
HORZ	HORIZONTAL
HR	HANDRAIL, HOUR
HVAC	HEATING/ VENTILATING/AIR CONDITIONING
HW	HOT WATER
HWG	HARDWARE GROUP
IBC	INTERNATIONAL BUILDING CODE
INCL	INCLUDE (D) (ING)
INS	INSULATE (D) (ION)
INSUL	INSULATION
INT	INTERIOR
JAN	JANITORS CLOSET
JT	JOINT
L	LENGTH, LONG
LAV	LAVATORY
LEV	LEVEL
LG	LENGTH, LONG
M (m)	METER
MM(mm)	MILLIMETER
MAS	MASONRY
MAT	MATERIAL
MAX	MAXIMUM
MDF	MEDIUM DENSITY FIBERBOARD
MECH	MECHANICAL
MFR	MANUFACTURE (R)
MIN	MINIMUM
MIR	MIRROR
MLP	METAL LINER PANEL
MO	MASONRY OPENING
NIC	NOT IN CONTRACT
NFPA	NATIONAL FIRE PROTECTION ASSOCIATION
NTS	NOT TO SCALE
OA	OVERALL
OC	ON CENTER
OPP	OPPOSITE
OPP HD	OPPOSITE HAND
P	PAINT SURFACE(S)
PAR	PARALLEL
PART	PARTITION
PL	PLASTER
PLUMB	PLUMBING
PNL	PANEL
PR	PAIR
PTD	PAINTED, PAPER TOWEL DISPENSER
PVC	POLYVINYL CHLORIDE
QTY	QUANTITY
R	RADIUS, RISERS
RCP	REFLECTED CEILING PLAN
REF	REFERENCE
REQD	REQUIRED
RFG	ROOFING
RFS	RAISED FLOOR SYSTEM
RLG	RAIL (ING)
RM	ROOM
RST	RUBBER STAIR TREAD
SC	SEALED CONCRETE
SCHED	SCHEDULE
SHTHG	SHEATHING
SIM	SIMILAR
SK	SINK
SM	SQUARE METER
SOG	SLAB ON GRADE
SP	SPACE (ING) (ES)
SPEC	SPECIFICATION (S)
SQ	SQUARE
SS	STAINLESS STEEL
STD	STANDARD
STL	STEEL
STOR	STORAGE
STRU	STRUCTURAL
SURF	SURFACE
T	TREAD, TOILET ROOM
TO	TOP OF
TB	TOP AND BOTTOM
TBD	TO BE DETERMINED
THK	THICKNESS
TOM	TOP OF MASONRY
TS	TOP OF STAIR
TYP	TYPICAL
UNO	UNLESS NOTED OTHERWISE
V	VENT
VAR	VARIES, VARIABLE
VCT	VINYL TILE COMPOSITION
VERT	VERTICAL
VEST	VESTIBULE
VIF	VERIFY IN FIELD
W	WIDTH, WIDE
WC	WATER CLOSET
WD	WOOD
WDW	WINDOW
WP	WORKING POINT
W/	WITH
W/O	WITHOUT

REFER TO LIFE SAFETY DRAWINGS FOR BUILDING CODE AND CONSTRUCTION DATA INFORMATION

THESE DRAWINGS ARE "NOT APPROVED FOR CONSTRUCTION" SINCE THESE ARE BASED UPON ASSUMED CONDITIONS. THE CONTRACTOR SHALL NOT PROCEED WITH CONSTRUCTION UNTIL THE ASSUMED CONDITIONS ARE VALIDATED AND APPROVAL IS RECEIVED FROM THE CONTRACTING OFFICER.

REGISTERED ARCHITECT — STATE OF NEW YORK

2/6/2012

UNLESS OTHERWISE NOTED, LINEAR DIMENSIONS SHOWN ARE IN MILLIMETERS.

DESIGN COMPLETE SUBMITTAL

SYMB	DESCRIPTION	DATE	APR
FNL	DESIGN COMPLETE SUBMITTAL	02-06-12	WESR

DESIGNED BY: PTO
DATE: 02-06-2012
DRAWN BY: NLW
SUBMITTED BY: TETRA TECH
CHECKED BY: KCB
FILE NO.: AF1202$-SA001GN

TETRA TECH

US Army Corps of Engineers
Middle East District

COMMAND & CONTROL FACILITY
KANDAHAR AIR FIELD, AFGHANISTAN
STANDARD DRAWINGS
SYMBOLS AND ABBREVIATIONS

SHEET REFERENCE NUMBER:
$
SA–001

W:\23308\127-23308-11004\CAD\MED Drawings\AF1202\Standards\Architectural\AF1202$-SA001GN.dwg 3/7/2012 10:07:52 AM Jeffers, Scott

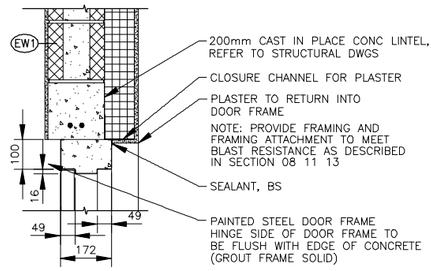

DOOR HEAD DETAIL (EXTERIOR) 1 A-600 SA-500

SCALE 1:10

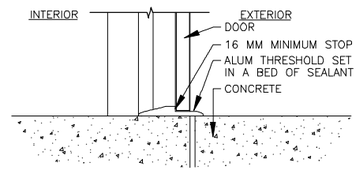

NOTE: PROVIDE THRESHOLD AND THRESHOLD ATTACHMENT TO MEET BLAST RESISTANCE AS DESCRIBED IN SECTION 08 11 13

DOOR THRESHOLD 5 A-600 SA-500

SCALE 1:10

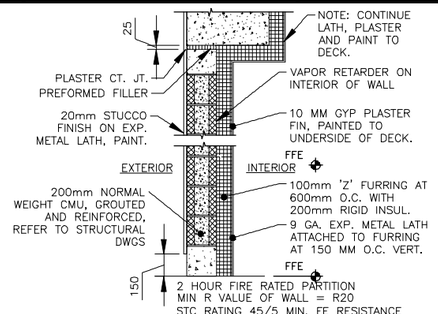

EXTERIOR WALL TYPE EW1

SCALE 1:20

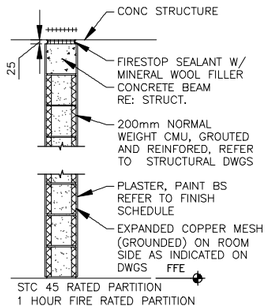

PARTITION TYPE A4

SCALE 1:20

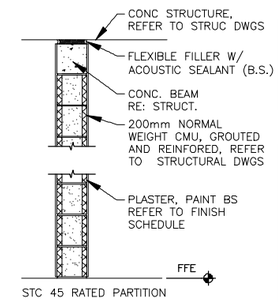

PARTITION TYPE A1

SCALE 1:20

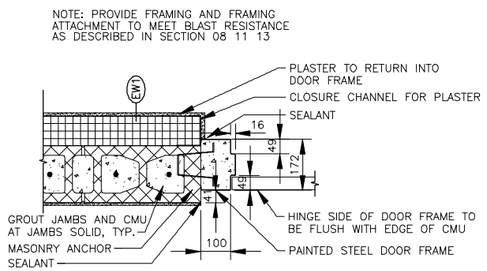

DOOR JAMB DETAIL (EXTERIOR) 2 A-600 SA-500

SCALE 1:10

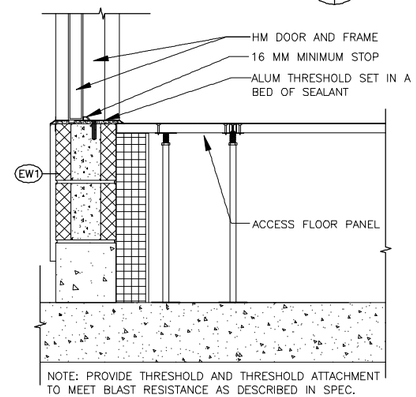

(EXTERIOR) DOOR THRESHOLD 6 A-600 SA-500

SCALE 1:10

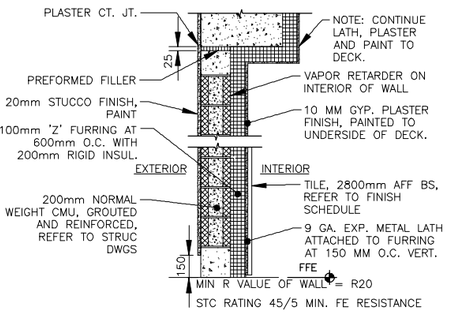

EXTERIOR WALL TYPE EW2

SCALE 1:20

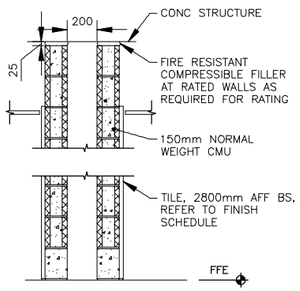

PARTITION TYPE A5

SCALE 1:20

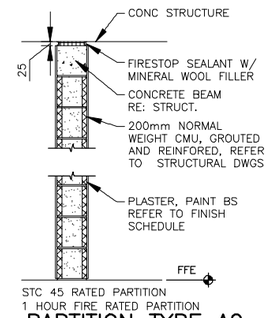

PARTITION TYPE A2

SCALE 1:20

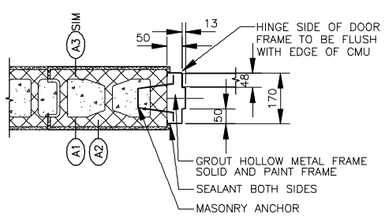

DOOR JAMB DETAIL (INTERIOR) 3 A-600 SA-500

SCALE 1:10

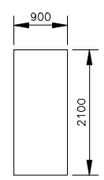

F

DOOR TYPES 7 A-600 SA-500

SCALE 1:50

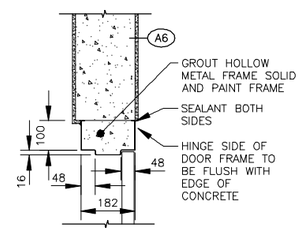

DOOR HEAD DETAIL 9 A-600 SA-500

SCALE 1:10

PARTITION TYPE A5

SCALE 1:20

PARTITION TYPE A2

SCALE 1:20

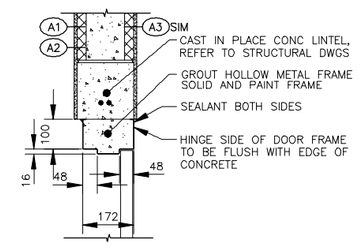

DOOR HEAD DETAIL (INTERIOR) 4 A-600 SA-500

SCALE 1:10

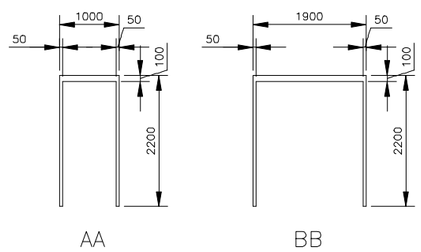

AA BB

FRAME TYPES 8 A-600 SA-500

SCALE 1:50

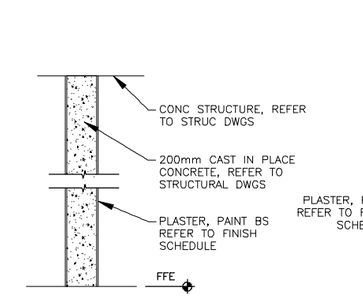

PARTITION TYPE A6

SCALE 1:20

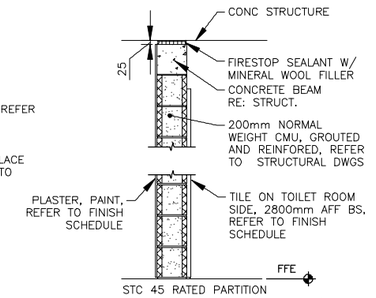

PARTITION TYPE A3 & A7

SCALE 1:20

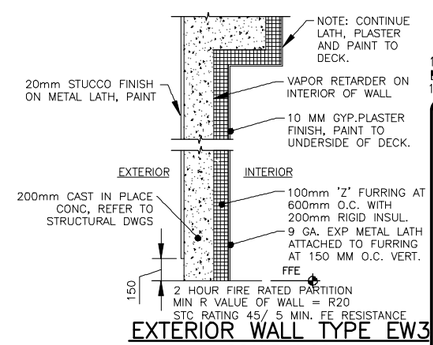

EXTERIOR WALL TYPE EW3

SCALE 1:20

1 0 1 2 3 4 5 6 7 8 9
1:100

THESE DRAWINGS ARE "NOT APPROVED FOR CONSTRUCTION" SINCE THESE ARE BASED UPON ASSUMED CONDITIONS. THE CONTRACTOR SHALL NOT PROCEED WITH CONSTRUCTION UNTIL THE ASSUMED CONDITIONS ARE VALIDATED AND APPROVAL IS RECEIVED FROM THE CONTRACTING OFFICER.

REGISTERED ARCHITECT — STATE OF NEW YORK — 2/6/2012

UNLESS OTHERWISE NOTED, LINEAR DIMENSIONS SHOWN ARE IN MILLIMETERS.

DESIGN COMPLETE SUBMITTAL

SYMB	DESCRIPTION	DATE	APR
FNL	DESIGN COMPLETE SUBMITTAL	02-06-12	WESR

DESIGNED BY: PTO
DATE: 02-06-2012
DRAWN BY: NLW
SUBMITTED BY: TETRA TECH
CHECKED BY: KCB
FILE NO.: AF1202$-SA500DT

TETRA TECH

US Army Corps of Engineers Middle East District

COMMAND & CONTROL FACILITY
KANDAHAR AIR FIELD, AFGHANISTAN
STANDARD DRAWINGS
MISCELLANEOUS DETAILS

SHEET REFERENCE NUMBER:
$
SA-500

W:\23308\127-23308-11004\CAD\MED Drawings\AF1202\Standards\Architectural\AF1202$-SA500DT.dwg 3/7/2012 10:08:48 AM Jeffers, Scott

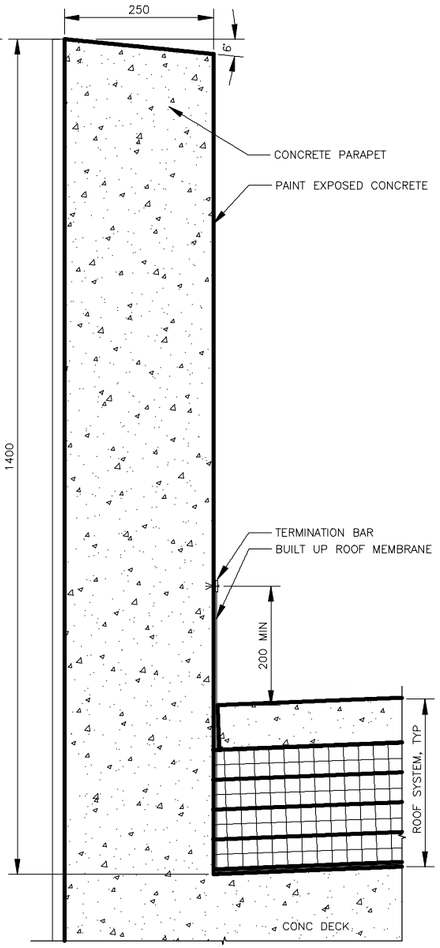

ROOF DETAIL (11)
SCALE 1:5 — A-104, A-106, A-302 | SA-501

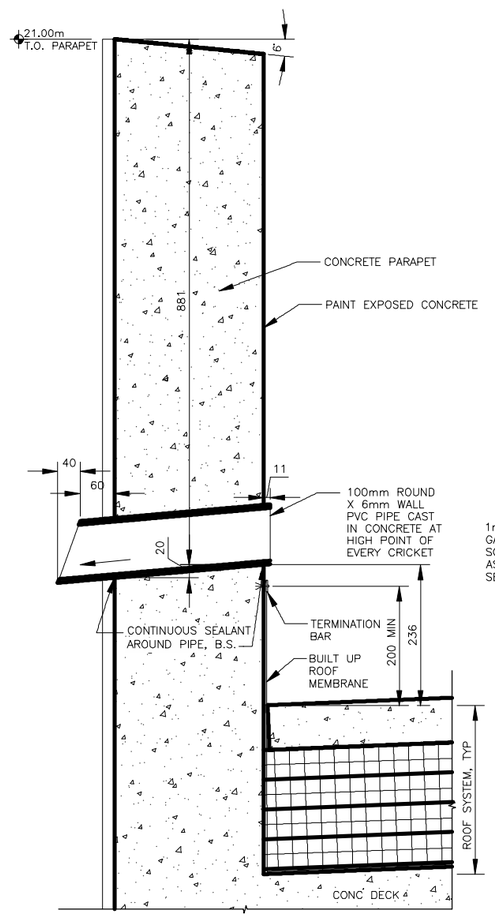

OVERFLOW DETAIL (12)
SCALE 1:5 — A-106 | SA-501

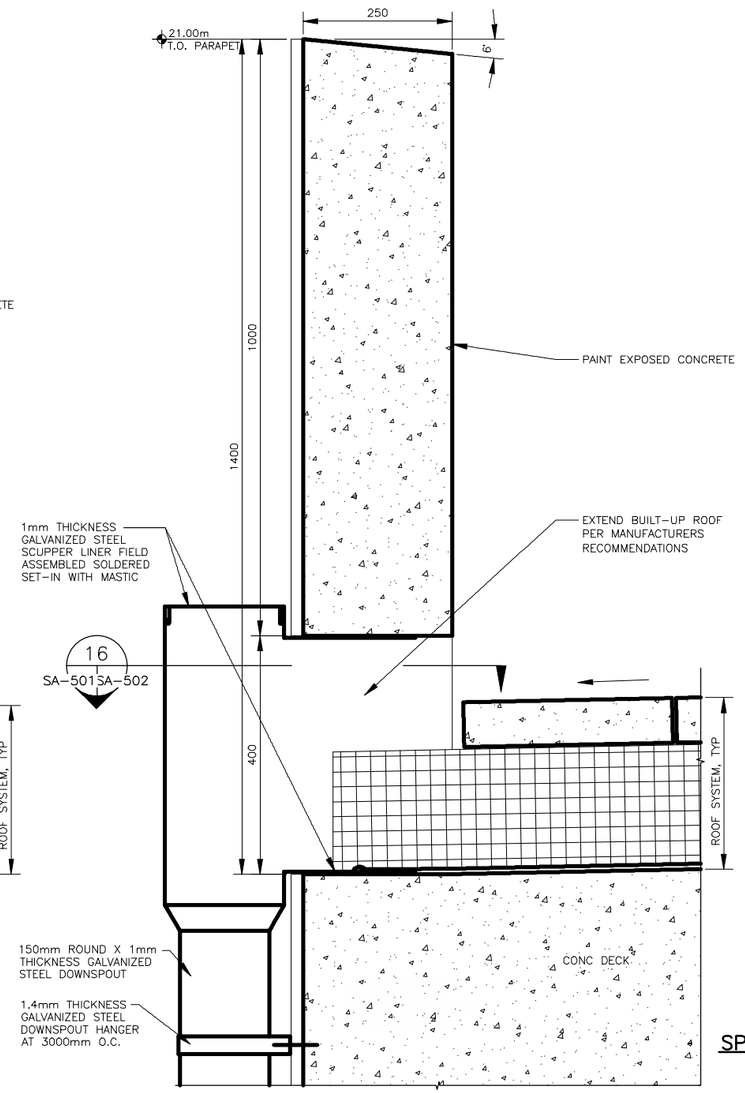

SCUPPER DETAIL (13)
SCALE 1:5 — A-104, A-106 | SA-501

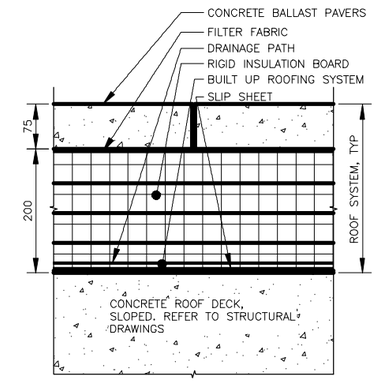

ROOF SYSTEM – RS1 (14)
SCALE 1:5 — A-106 | SA-501

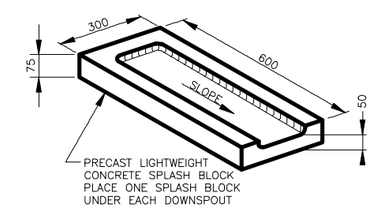

SPLASH BLOCK DETAIL (15)
SCALE 1:10 — A-100, A-104 | SA-501

1 0 1 2 3 4 5 6 7 8 9
1:100

THESE DRAWINGS ARE "NOT APPROVED FOR CONSTRUCTION" SINCE THESE ARE BASED UPON ASSUMED CONDITIONS. THE CONTRACTOR SHALL NOT PROCEED WITH CONSTRUCTION UNTIL THE ASSUMED CONDITIONS ARE VALIDATED AND APPROVAL IS RECEIVED FROM THE CONTRACTING OFFICER.

REGISTERED ARCHITECT — STATE OF NEW YORK
2/6/12

UNLESS OTHERWISE NOTED, LINEAR DIMENSIONS SHOWN ARE IN MILLIMETERS.

DESIGN COMPLETE SUBMITTAL

SYMB	DESCRIPTION	DATE	APR
FNL	DESIGN COMPLETE SUBMITTAL	02-06-12	WESR

DESIGNED BY: PTO
DRAWN BY: NLW
CHECKED BY: KCB
DATE: 02-06-2012
SUBMITTED BY: TETRA TECH
FILE NO.: AF1202$-SA501DT

TETRA TECH

US Army Corps of Engineers
Middle East District

COMMAND & CONTROL FACILITY
KANDAHAR AIR FIELD, AFGHANISTAN
STANDARD DRAWINGS
ROOF DETAILS

SHEET REFERENCE NUMBER:
$
SA-501

W:\23308\127-23308-11004\CAD\MED Drawings\AF1202\Standards\Architectural\AF1202$-SA501DT.dwg 3/7/2012 10:09:23 AM Jeffers, Scott

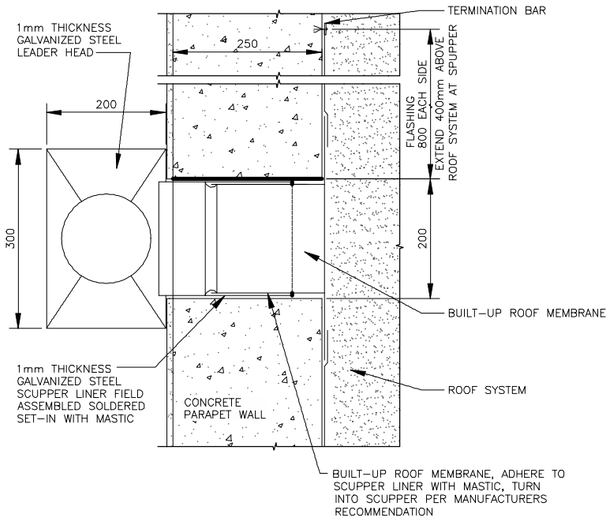

SCUPPER DETAIL 16
SCALE 1:5 SA-501 | SA-502

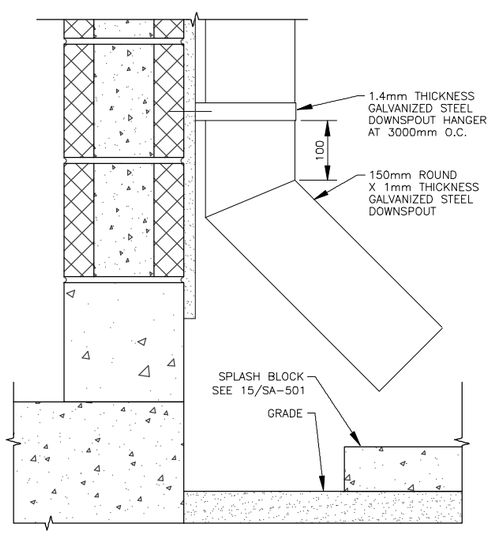

DOWNSPOUT DETAIL 17
SCALE 1:5 A-200, A-201 | SA-502

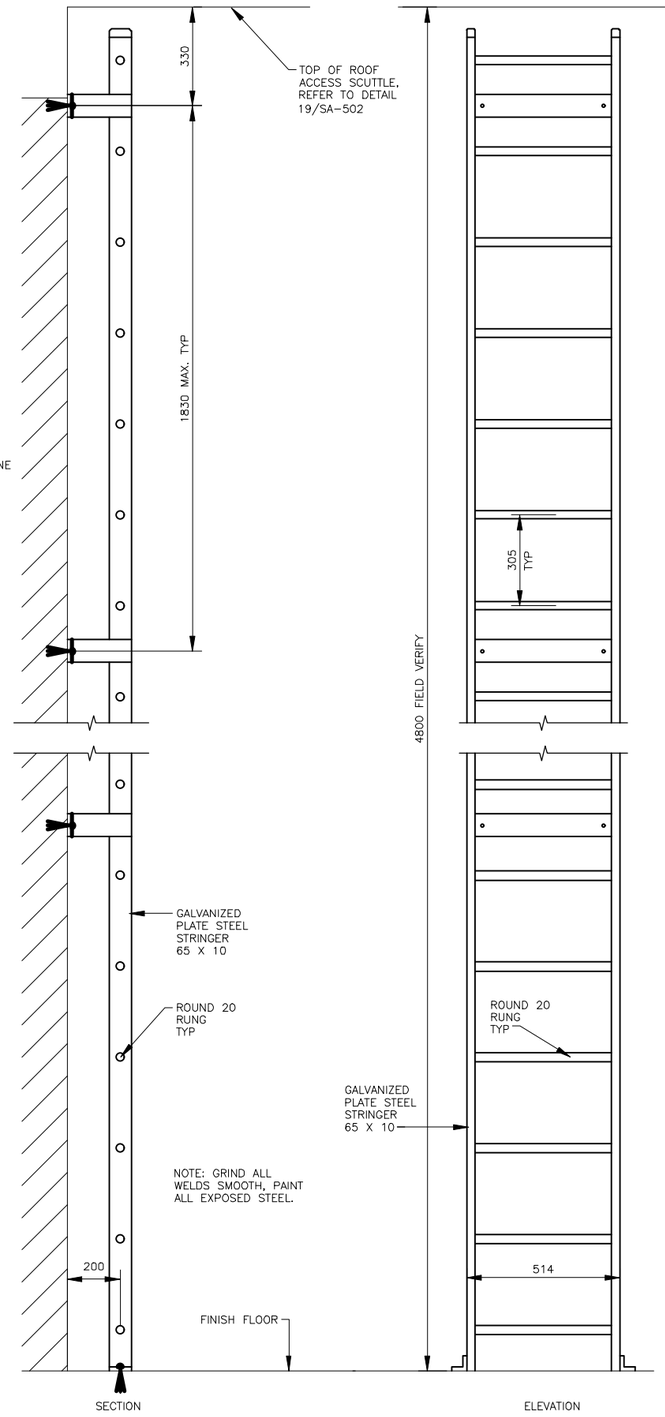

ACCESS LADDER DETAIL 18
SCALE 1:10 A-101, A-102 | SA-502

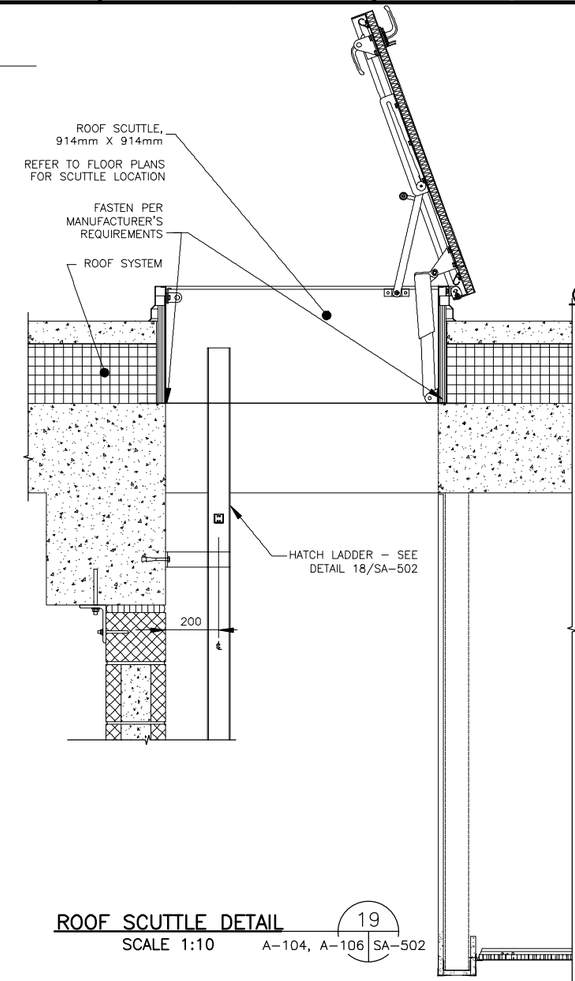

ROOF SCUTTLE DETAIL 19
SCALE 1:10 A-104, A-106 | SA-502

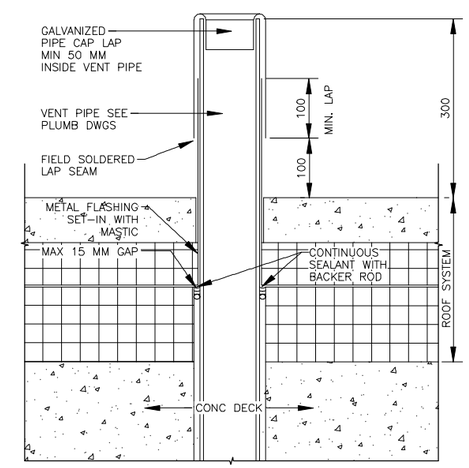

ROOF VENT DETAIL 20
SCALE 1:5 A-106, A-104 | SA-502

* COORDINATE WITH ELEVATIONS FOR LOCATIONS.

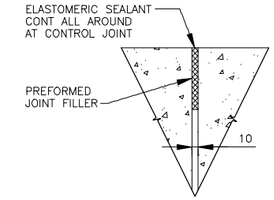

CONTROL JOINT DETAIL 21
SCALE 1:5 A-200, A-201 | SA-502

1 0 1 2 3 4 5 6 7 8 9
1:100

THESE DRAWINGS ARE "NOT APPROVED FOR CONSTRUCTION" SINCE THESE ARE BASED UPON ASSUMED CONDITIONS. THE CONTRACTOR SHALL NOT PROCEED WITH CONSTRUCTION UNTIL THE ASSUMED CONDITIONS ARE VALIDATED AND APPROVAL IS RECEIVED FROM THE CONTRACTING OFFICER.

REGISTERED ARCHITECT — STATE OF NEW YORK

2/6/2012

UNLESS OTHERWISE NOTED, LINEAR DIMENSIONS SHOWN ARE IN MILLIMETERS.

DESIGN COMPLETE SUBMITTAL

SYMB	DESCRIPTION	DATE	APR
FNL	DESIGN COMPLETE SUBMITTAL	02-06-12	WESR

DESIGNED BY: PTO
DATE: 02-06-2012
DRAWN BY: NLW
SUBMITTED BY: TETRA TECH
CHECKED BY: KCB
FILE NO.: AF1202$-SA502DT

TETRA TECH

US Army Corps of Engineers Middle East District

COMMAND & CONTROL FACILITY
KANDAHAR AIR FIELD, AFGHANISTAN
STANDARD DRAWINGS
MISCELLANEOUS DETAILS

SHEET REFERENCE NUMBER:
$
SA-502

W:\23308\127-23308-11004\CAD\MED Drawings\AF1202\Standards\Architectural\AF1202$-SA502DT.dwg 3/7/2012 10:10:02 AM Jeffers, Scott

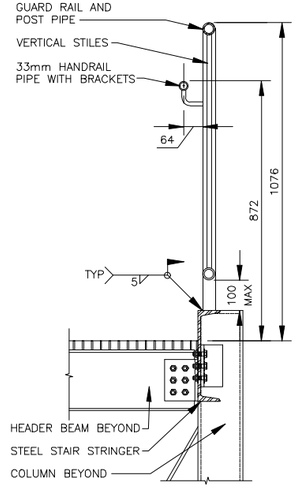

GUARDRAIL DETAIL (22 / A-401 SA-503)
SCALE 1:10

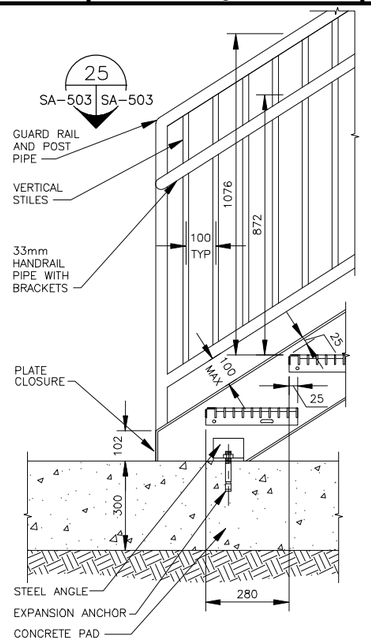

GUARDRAIL DETAIL (24 / A-401 SA-503)
SCALE 1:10

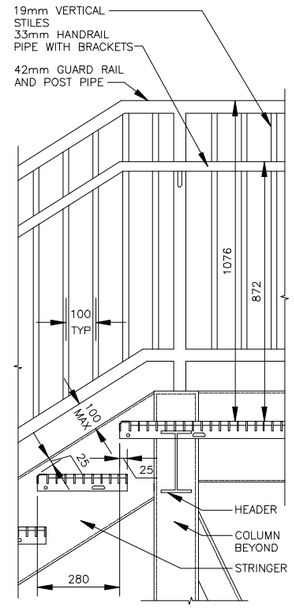

STAIR DETAIL (27 / A-401 SA-503)
SCALE 1:10

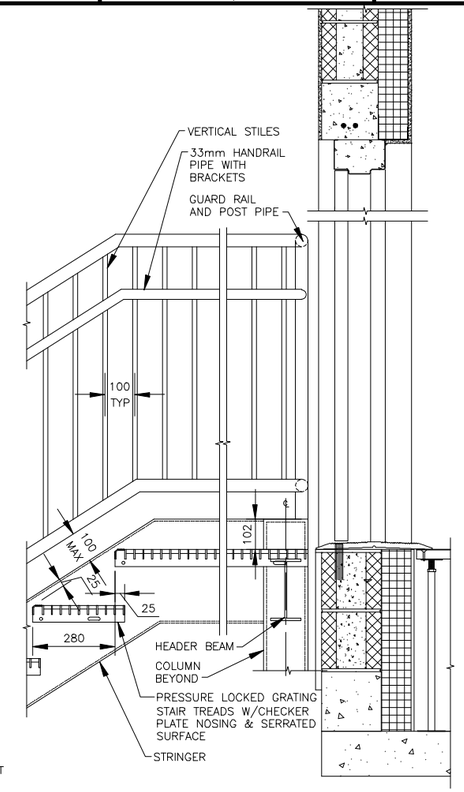

GUARDRAIL DETAIL (30 / A-401 SA-503)
SCALE 1:10

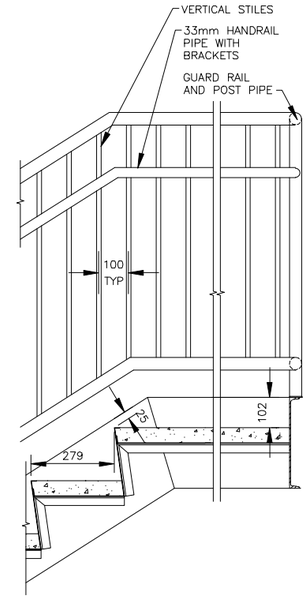

STAIR HEADER DETAIL (33 / A-401 SA-503)
SCALE 1:10

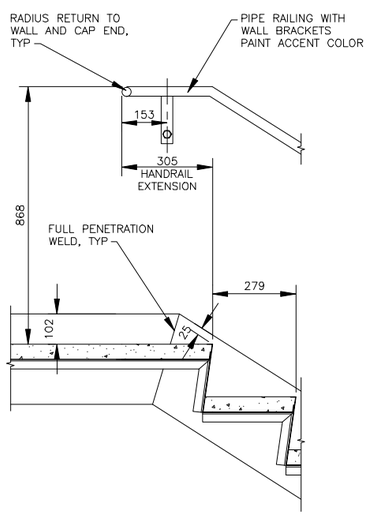

STAIR HEADER DETAIL (23 / A-401 SA-503)
SCALE 1:10

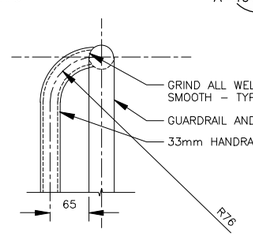

HANDRAIL DETAIL (25 / A-401 SA-503)
SCALE 1:5

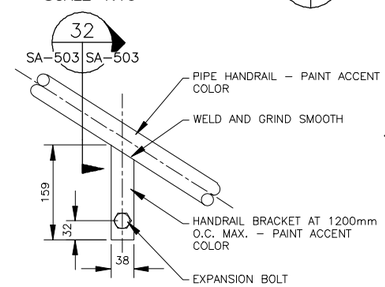

STAIR DETAIL (28 / SA-503 SA-503)
SCALE 1:5

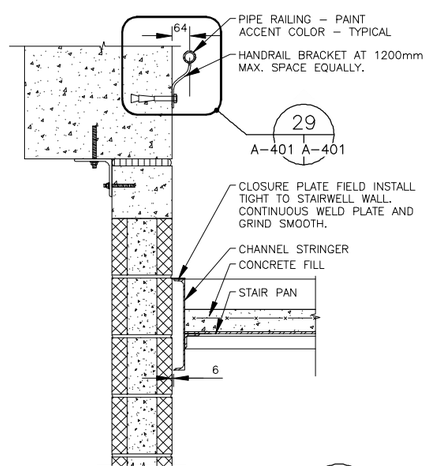

STAIR DETAIL (26 / A-401 SA-503)
SCALE 1:10

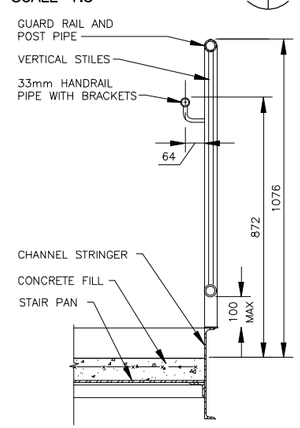

STAIR DETAIL (29 / A-401 SA-503)
SCALE 1:10

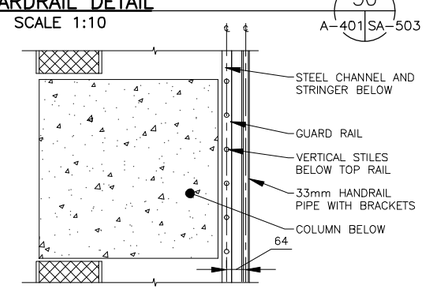

HANDRAIL DETAIL (31 / A-401 SA-503)
SCALE 1:10

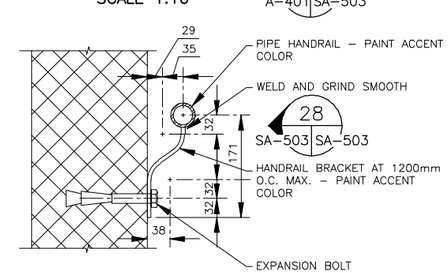

STAIR DETAIL (32 / A-401 SA-503)
SCALE 1:5

0 .50 1.00
1:10

0 .10 .20 .30 .40 .50
1:5

THESE DRAWINGS ARE "NOT APPROVED FOR CONSTRUCTION" SINCE THESE ARE BASED UPON ASSUMED CONDITIONS. THE CONTRACTOR SHALL NOT PROCEED WITH CONSTRUCTION UNTIL THE ASSUMED CONDITIONS ARE VALIDATED AND APPROVAL IS RECEIVED FROM THE CONTRACTING OFFICER.

REGISTERED ARCHITECT — STATE OF NEW YORK
2/6/2012

UNLESS OTHERWISE NOTED, LINEAR DIMENSIONS SHOWN ARE IN MILLIMETERS.

DESIGN COMPLETE SUBMITTAL

SYMB	DESCRIPTION	DATE	APR
FNL	DESIGN COMPLETE SUBMITTAL	02-06-12	WESR

DESIGNED BY: PTO
DATE: 02-06-2012
DRAWN BY: NLW
SUBMITTED BY: TETRA TECH
CHECKED BY: KCB
FILE NO.: AF1202$-SA503DT

TETRA TECH

US Army Corps of Engineers
Middle East District

COMMAND & CONTROL FACILITY
KANDAHAR AIR FIELD, AFGHANISTAN
STANDARD DRAWINGS
MISCELLANEOUS DETAILS

SHEET REFERENCE NUMBER:
$
SA-503

W:\23308\127-23308-11004\CAD\MED Drawings\AF1202\Standards\Architectural\AF1202$-SA503DT.dwg 3/7/2012 10:10:49 AM Jeffers, Scott

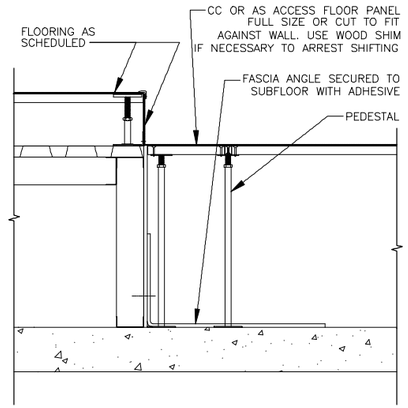

EDGE OF FLOOR SYSTEM DETAIL (32 / A-403 | SA-504)
SCALE 1:10

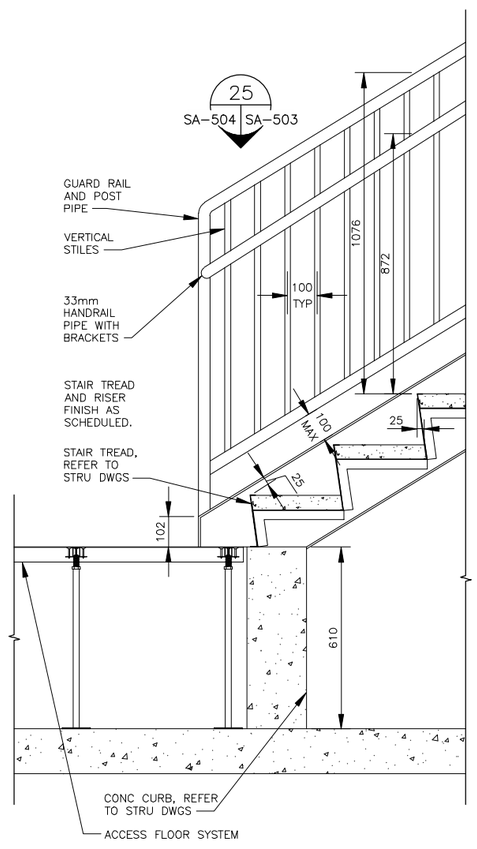

GUARDRAIL DETAIL (33 / A-401 | SA-504)
SCALE 1:10

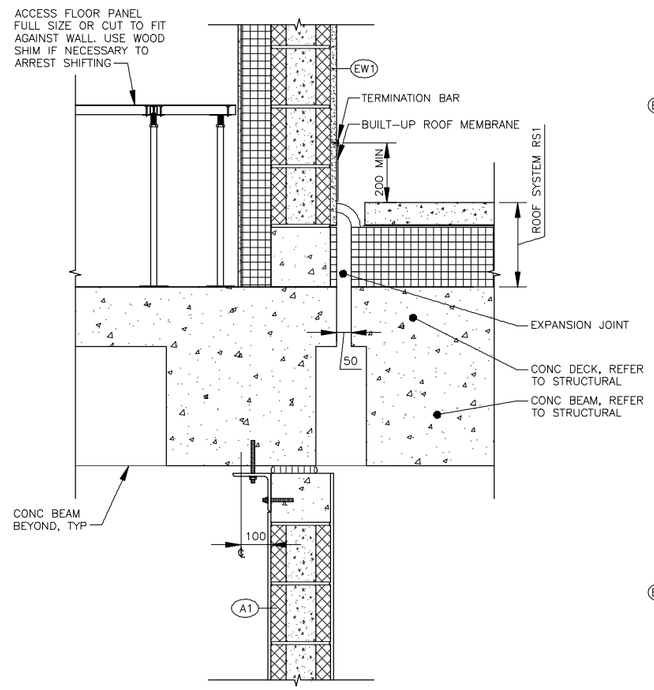

ROOF EDGE DETAIL (34 / A-302 | SA-504)
SCALE 1:10

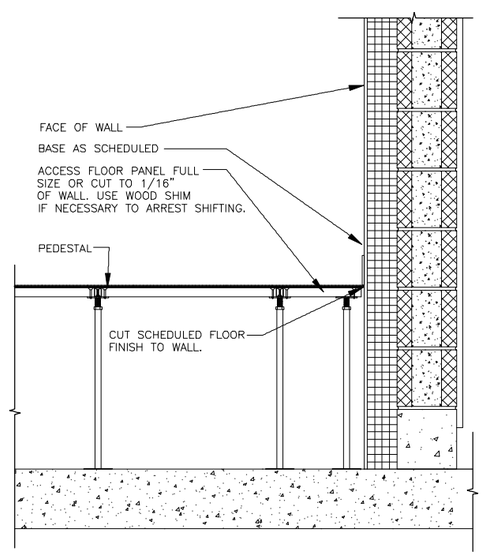

EDGE OF WALL DETAIL (35 / A-301 | SA-504)
SCALE 1:10

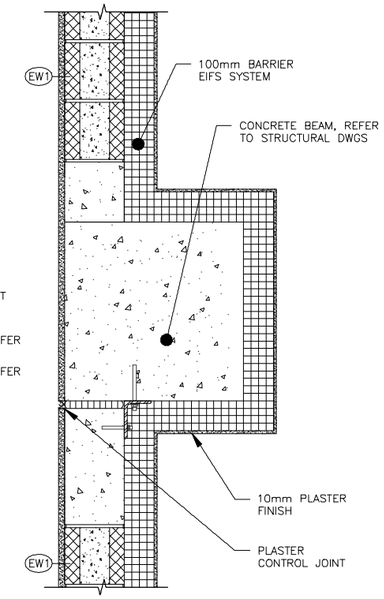

WALL DETAIL (36 / A-302 | SA-504)
SCALE 1:10

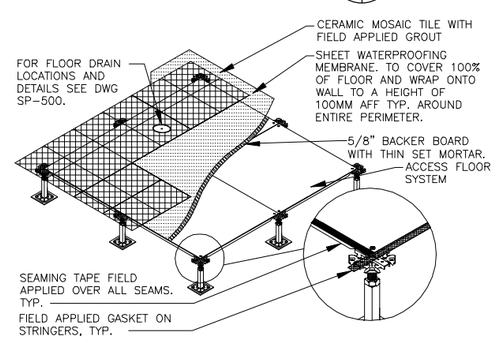

TILE OVER ACCESS FLOOR (37 / SA-504 | SA-504)
SCALE 1:10

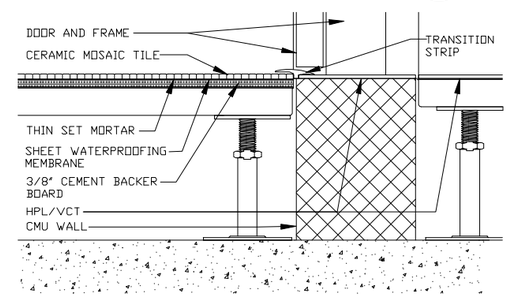

CFT TRANSITION TO HPL/ VCT (38 / SA-504 | SA-504)
SCALE NTS

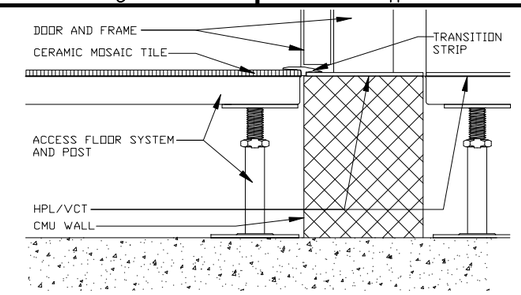

HPL/VCT TRANSITION TO CARPET (39 / SA-504 | SA-504)
SCALE NTS

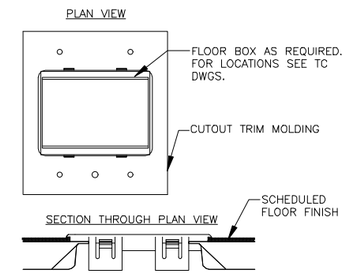

FLOOR BOX DETAIL (40 / SA-504 | SA-504)
SCALE NTS

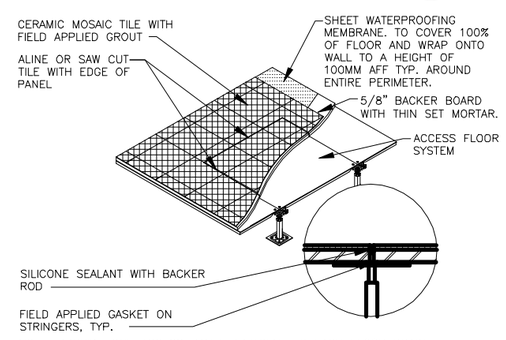

NOTE: PROVIDE ONE ACCESS PANEL ADJACENT TO EACH FLOOR DRAIN.

TILE OVER ACCESS FLOOR (37A / SA-504 | SA-504)
SCALE 1:10

0 .50 1.00
1:10

THESE DRAWINGS ARE "NOT APPROVED FOR CONSTRUCTION" SINCE THESE ARE BASED UPON ASSUMED CONDITIONS. THE CONTRACTOR SHALL NOT PROCEED WITH CONSTRUCTION UNTIL THE ASSUMED CONDITIONS ARE VALIDATED AND APPROVAL IS RECEIVED FROM THE CONTRACTING OFFICER.

REGISTERED ARCHITECT HENRY LEONARDO STEPHANOS DEJESUS STATE OF NEW YORK
2/6/2012

UNLESS OTHERWISE NOTED, LINEAR DIMENSIONS SHOWN ARE IN MILLIMETERS.

DESIGN COMPLETE SUBMITTAL

FNL	DESIGN COMPLETE SUBMITTAL	02-06-12	WESR
SMB	DESCRIPTION	DATE	APR

DESIGNED BY: PTO
DATE: 02-06-2012
DRAWN BY: NLW
SUBMITTED BY: TETRA TECH
CHECKED BY: KCB/MHH
FILE NO.: AF1202$-SA504DT

TETRA TECH

US Army Corps of Engineers Middle East District

COMMAND & CONTROL FACILITY
KANDAHAR AIR FIELD, AFGHANISTAN
STANDARD DRAWINGS
MISCELLANEOUS DETAILS

SHEET REFERENCE NUMBER:
$
SA-504

W:\23308\127-23308-11004\CAD\WED Drawings\AF1202\Standards\Architectural\AF1202$-SA504DT.dwg 3/7/2012 10:11:30 AM Jeffers, Scott

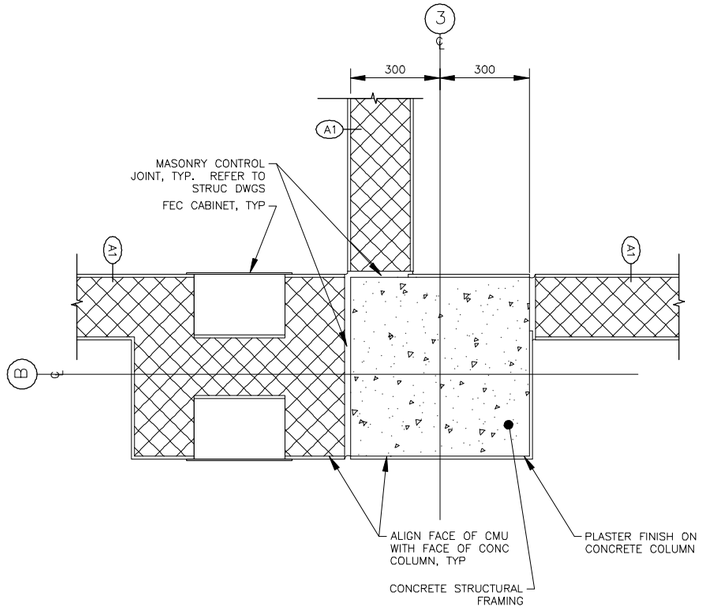

PLAN DETAIL 41
SCALE 1:10 A-302 SA-505

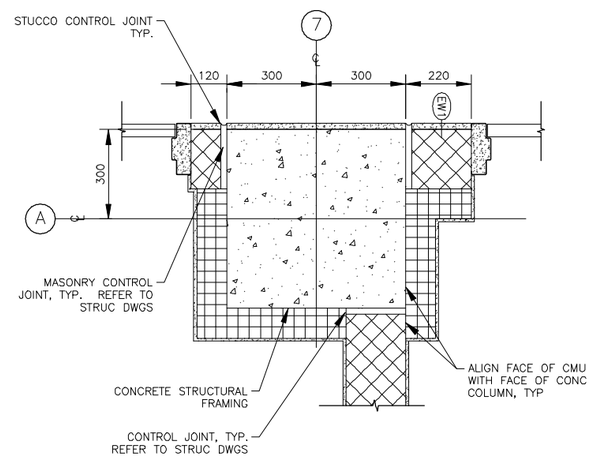

PLAN DETAIL 43
SCALE 1:10 A-302 SA-505

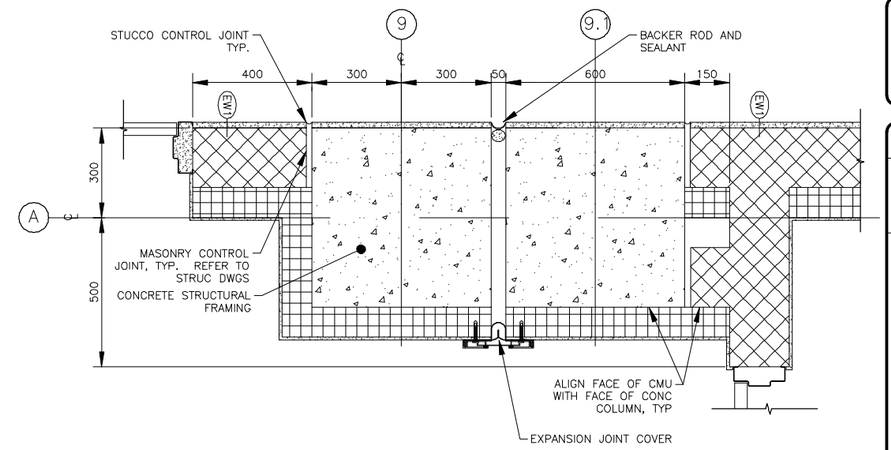

PLAN DETAIL 45
SCALE 1:10 A-302 SA-505

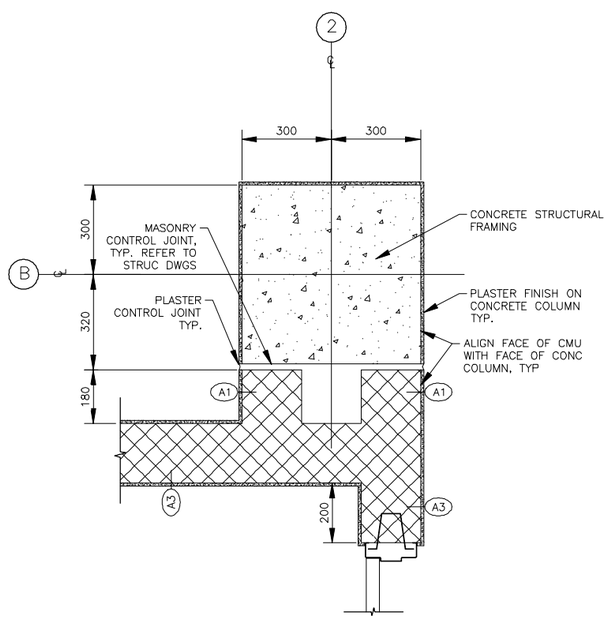

PLAN DETAIL 42
SCALE 1:10 A-302 SA-505

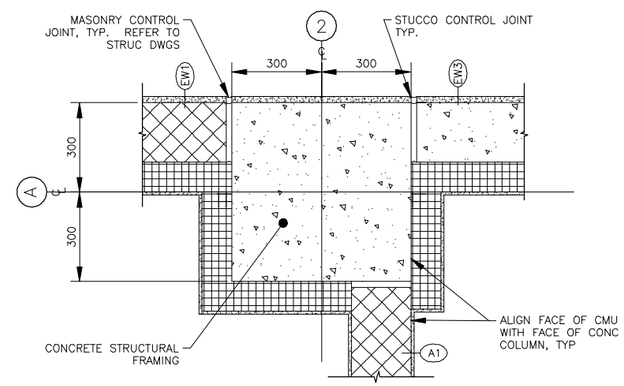

PLAN DETAIL 44
SCALE 1:10 A-302 SA-505

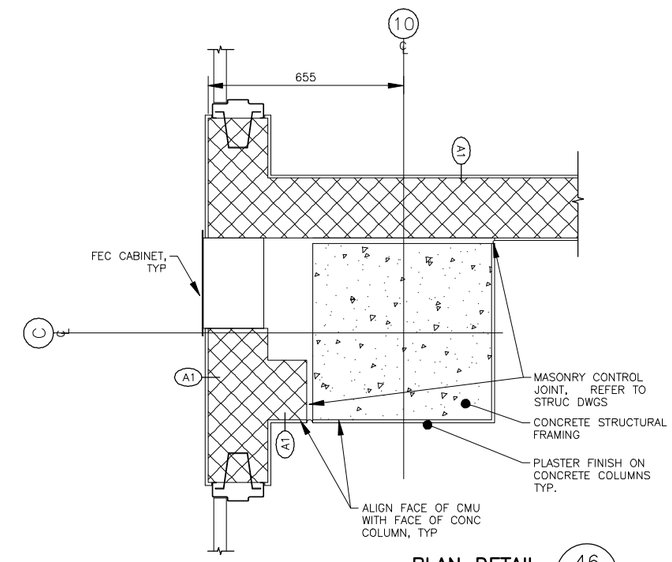

PLAN DETAIL 46
SCALE 1:10 A-302 SA-505

0 .50 1.00
1:10

THESE DRAWINGS ARE "NOT APPROVED FOR CONSTRUCTION" SINCE THESE ARE BASED UPON ASSUMED CONDITIONS. THE CONTRACTOR SHALL NOT PROCEED WITH CONSTRUCTION UNTIL THE ASSUMED CONDITIONS ARE VALIDATED AND APPROVAL IS RECEIVED FROM THE CONTRACTING OFFICER.

REGISTERED ARCHITECT VICKRY EUGENE STEPHANOPOLI DESIGNER STATE OF NEW YORK

2/6/2012

UNLESS OTHERWISE NOTED, LINEAR DIMENSIONS SHOWN ARE IN MILLIMETERS.

NOTE: CONCRETE COLUMN SIZES MAY VARY. COORDINATE ACTUAL DIMENSIONS WITH STRUCTURAL DRAWINGS.

DESIGN COMPLETE SUBMITTAL

FNL	DESIGN COMPLETE SUBMITTAL	02-06-12
SMB	DESCRIPTION	DATE

WESR
APR

DESIGNED BY: PTO
DATE: 02-06-2012
DRAWN BY: NLW
SUBMITTED BY: TETRA TECH
CHECKED BY: KCB
FILE NO.: AF1202$-SA505DT

TETRA TECH

US Army Corps of Engineers
Middle East District

COMMAND & CONTROL FACILITY
KANDAHAR AIR FIELD, AFGHANISTAN
STANDARD DRAWINGS
PLAN DETAILS

SHEET REFERENCE NUMBER:
$
SA-505

W:\23308\127-23308-11004\CAD\MED Drawings\AF1202\Standards\Architectural\AF1202$-SA505DT.dwg 3/7/2012 10:12:02 AM Jeffers, Scott

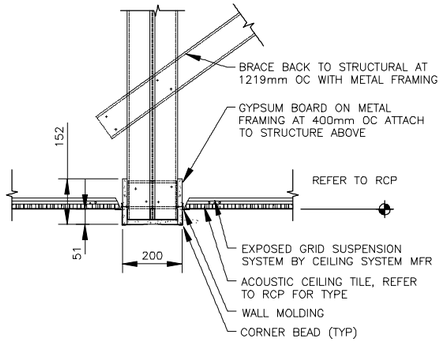

SOFFIT DETAIL 47
SCALE 1:10 A-103, A-104, A-105 | SA-506

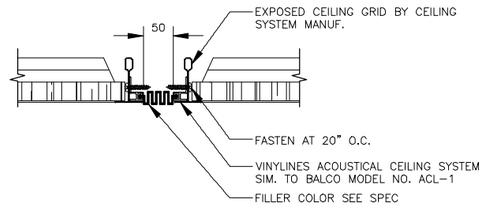

EXPANSION JOINT DETAIL 50
SCALE 1:5 A-103, A-104, A-105 | SA-506

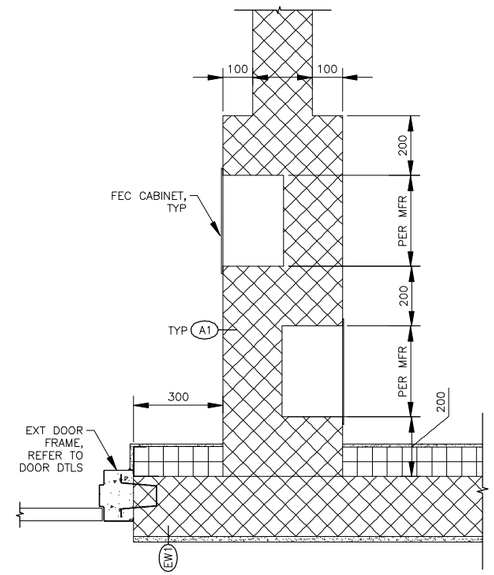

PLAN DETAIL 54
SCALE 1:10 A-100 | SA-506

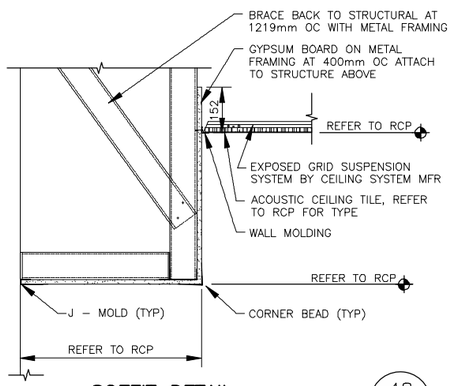

SOFFIT DETAIL 48
SCALE 1:10 A-103, A-104, A-105 | SA-506

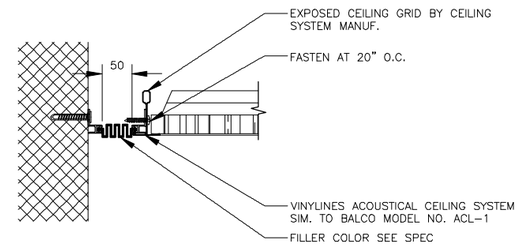

EXPANSION JOINT DETAIL 51
SCALE 1:5 A-103, A-104, A-105 | SA-506

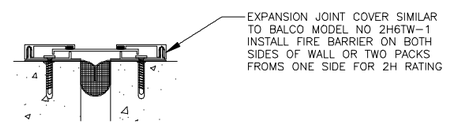

EXPANSION JOINT DETAIL 52
SCALE 1:5 A-103, A-104, A-105 | SA-506

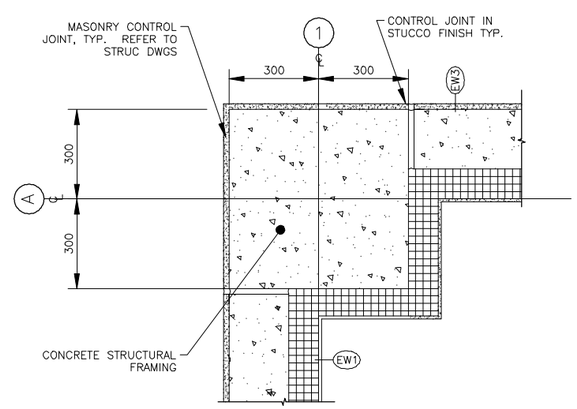

PLAN DETAIL 55
SCALE 1:10 A-100 | SA-506

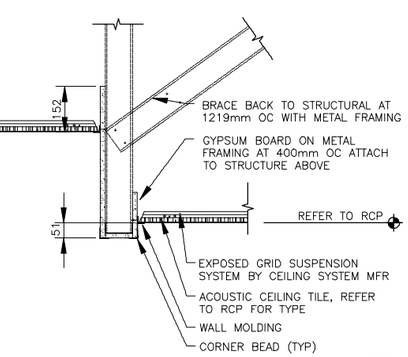

SOFFIT DETAIL 49
SCALE 1:10 A-103, A-104, A-105 | SA-506

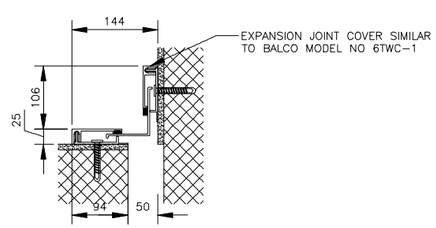

EXPANSION JOINT DETAIL 53
SCALE 1:5 A-103, A-104, A-105 | SA-506

NOTE: CONCRETE COLUMN SIZES MAY VARY. COORDINATE ACTUAL DIMENSIONS WITH STRUCTURAL DRAWINGS.

0 .10 .20 .30 .40 .50
1:5

0 .50 1.00
1:10

THESE DRAWINGS ARE "NOT APPROVED FOR CONSTRUCTION" SINCE THESE ARE BASED UPON ASSUMED CONDITIONS. THE CONTRACTOR SHALL NOT PROCEED WITH CONSTRUCTION UNTIL THE ASSUMED CONDITIONS ARE VALIDATED AND APPROVAL IS RECEIVED FROM THE CONTRACTING OFFICER.

REGISTERED ARCHITECT KEVIN J. GEORGETTI STEVENS INSTITUTE OF TECHNOLOGY 026-39[illegible] STATE OF NEW YORK

2/6/2012

UNLESS OTHERWISE NOTED, LINEAR DIMENSIONS SHOWN ARE IN MILLIMETERS.

- IF RATING REQUIRED (OR SMOKE BARRIER) EXTEND GYP. BD. TO DECK
- SEISMIC CATEGORY, STORIES IN HT., BUILDING IMPORTANCE FACTOR WILL DETERMINE IF DETAIL REQUIRES STRUCTURAL REVIEW

DESIGN COMPLETE SUBMITTAL

SYMB	DESCRIPTION	DATE	APR
FNL	DESIGN COMPLETE SUBMITTAL	02-06-12	WESR

DESIGNED BY: PTO
DATE: 02-06-2012
DRAWN BY: NLW
SUBMITTED BY: TETRA TECH
CHECKED BY: KCB
FILE NO.: AF12023-SA506DT

TETRA TECH

US Army Corps of Engineers Middle East District

COMMAND & CONTROL FACILITY
KANDAHAR AIR FIELD, AFGHANISTAN
STANDARD DRAWINGS
MISCELLANEOUS DETAILS

SHEET REFERENCE NUMBER:
$
SA-506

W:\23308\127-23308-11004\CAD\MED Drawings\AF1202\Standards\Architectural\AF1202$-SA506DT.dwg 3/7/2012 10:12:33 AM Jeffers, Scott

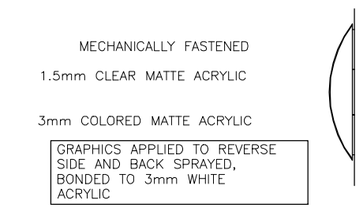

SIGNAGE SECTION
SCALE 1:5
1 SA-510 | SA-510

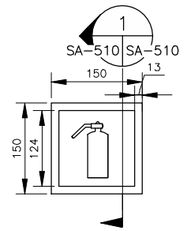

ELEVATION SIGNAGE TYPE 3
SCALE 1:5
2 SA-510 | SA-510

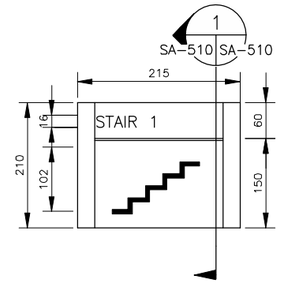

ELEVATION SIGNAGE TYPE 4
SCALE 1:5
3 SA-510 | SA-510

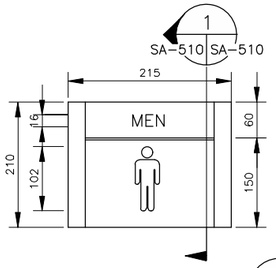

SIGNAGE TYPE 1
SCALE 1:5
4 SA-510 | SA-510

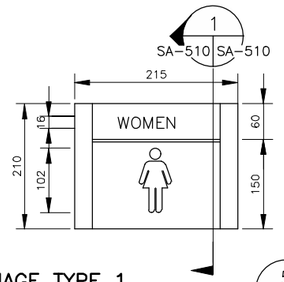

SIGNAGE TYPE 1
SCALE 1:5
5 SA-510 | SA-510

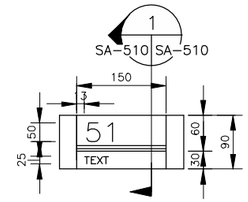

SIGNAGE TYPE 2
SCALE 1:5
6 SA-510 | SA-510

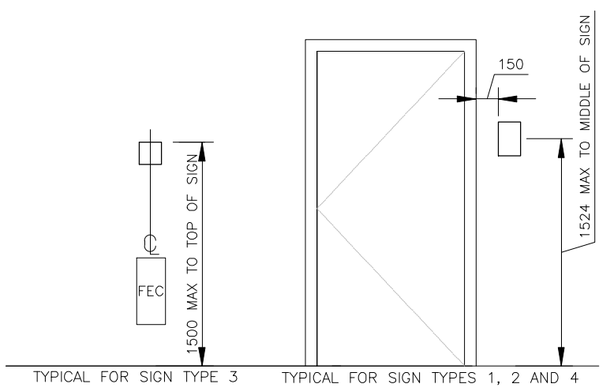

TYPICAL FOR SIGN TYPE 3 TYPICAL FOR SIGN TYPES 1, 2 AND 4

SIGNAGE TYPE 1
SCALE 1:20
7 SA-510 | SA-510

A04

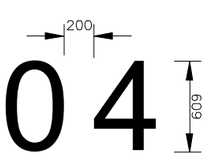

NOTE:
REFER TO EXTERIOR BUILDING ELEVATIONS FOR LOCATIONS CONTRACTOR TO ASSUME UP TO 3 LETTERS AND 3 NUMBERS PER BUILDING. THIS IS FOR SPACING AND SIZE REFERENCE ONLY. NUMBER AND LETTER SEQUENCE TBD BY CONTRACTING OFFICER.

SIGNAGE TYPE 1
SCALE 1:20
8 SA-510 | SA-510

1 .50 0 1
1:20
0 .10 .20 .30 .40 .50
1:5

THESE DRAWINGS ARE "NOT APPROVED FOR CONSTRUCTION" SINCE THESE ARE BASED UPON ASSUMED CONDITIONS. THE CONTRACTOR SHALL NOT PROCEED WITH CONSTRUCTION UNTIL THE ASSUMED CONDITIONS ARE VALIDATED AND APPROVAL IS RECEIVED FROM THE CONTRACTING OFFICER.

REGISTERED ARCHITECT
STATE OF NEW YORK

2/6/2012

UNLESS OTHERWISE NOTED, LINEAR DIMENSIONS SHOWN ARE IN MILLIMETERS.

DESIGN COMPLETE SUBMITTAL

SYMB	DESCRIPTION	DATE	APR
FNL	DESIGN COMPLETE SUBMITTAL	02-06-12	WESR

DESIGNED BY: PTO
DATE: 02-06-2012
DRAWN BY: MSV1
SUBMITTED BY: TETRA TECH
CHECKED BY: MHH
FILE NO.: AF1202$-SA510DT

TETRA TECH

US Army Corps of Engineers
Middle East District

COMMAND & CONTROL FACILITY
KANDAHAR AIR FIELD, AFGHANISTAN
STANDARD DRAWINGS
SIGNAGE DETAILS

SHEET REFERENCE NUMBER:
$
SA-510

W:\23308\127-23308-11004\CAD\MED Drawings\AF1202\Standards\Architectural\AF1202$-SA510DT.dwg 3/7/2012 10:12:56 AM Jeffers, Scott

FIRE ALARM GENERAL NOTES

1. ANY EXPOSED WIRING SHALL BE INSTALLED IN ELECTRICAL METALLIC TUBING (EMT) WITH SET SCREW TYPE FITTING. ALL CONDUIT SHALL RUN PERPENDICULAR AND / OR PARALLEL WITH THE RESPECTIVE BUILDING LINES.
2. ELECTRICAL CONTRACTOR SHALL UTILIZE ALARM VERIFICATION AS A STANDARD FEATURE FOR ALL ADDRESSABLE SMOKE DETECTORS.
3. THE CONTRACTOR, BEFORE INSTALLATION OR PROCUREMENT OF EQUIPMENT COMMENCES SHALL SUBMIT A COMPLETE SET OF SHOP DRAWINGS THAT DELINEATE ALL THE DEVICES BEING SUPPLIED FOR THIS PROJECT TO THE AUTHORITY HAVING JURISDICTION AND/OR LOCAL FIRE MARSHAL AND TO THE ENGINEER OF RECORD . THE SHOP DRAWING SHALL INDICATE MANUFACTURER'S NAMES AND CATALOG NUMBERS.
4. FIRE ALARM CONTRACTOR SHALL COORDINATE WITH FIRE SPRINKLER CONTRACTOR FOR SPECIFIC NUMBERS AND LOCATIONS OF ALL FLOW AND TAMPER SWITCHES.
5. ALL PULL AND JUNCTION BOXES AS WELL AS 152.5 MM OF ANY CONDUIT ENTERING OR LEAVING ANY PULL OR JUNCTION BOX SHALL BE PAINTED RED.
6. ELECTRICAL CONTRACTOR SHALL BE RESPONSIBLE FOR A SET OF AS-BUILT DRAWINGS OF THE FIRE ALARM SYSTEM. AS-BUILT DRAWINGS SHALL INDICATE THE LOCATION OF THE CONTROL PANEL, ALL FIRE ALARM DEVICES AND WIRING INSTALLED. AS-BUILT DRAWINGS SHALL BE TURNED OVER TO OWNER'S PROJECT REPRESENTATIVE.
7. THE FIRE ALARM SYSTEM SHALL BE IN ACCORDANCE WITH NFPA 72, AND THE SPECIFICATION. ANY CHANGES TO THE SYSTEM DESIGN SHALL BE PRE-APPROVED BY THE AUTHORITY HAVING JURISDICTION AND/OR LOCAL FIRE MARSHAL.
8. FIRE ALARM RISER DIAGRAM IS ONLY DIAGRAMMATIC. REFER TO FIRE ALARM PLANS FOR EXACT NUMBER OF DEVICES.
9. ALL AUDIO/VISUAL DEVICES SHALL BE SYNCHRONIZED CODE 3, TEMPORAL PATTERN.
10. BATTERIES SHALL BE SIZED TO PROVIDE A MINIMUM OF 72 HOURS OF STANDBY POWER FOLLOWED BY 15 MINUTES UNDER FULL LOAD.
11. SPEAKER/STROBES SHALL HAVE A CLEAR STROBE LENS. SPEAKER/STROBE HOUSING SHALL BE RED AND NOT BE MARKED WITH THE WORD "FIRE".

FIRE ALARM SYMBOLS

FACP	FIRE ALARM CONTROL PANEL WITH MASS NOTIFICATION CAPABILITIES/VOICE ALARM
RACP	RELEASING FIRE ALARM PANEL
S	SMOKE DETECTOR
S_D	SMOKE DETECTOR (DUCT)
S_R	SMOKE DETECTOR (CONNECTED TO FM-200 RELEASING SYSTEM
P	MANUAL PULL STATION
A	ABORT BUTTON FOR FM-200 SYSTEM
M	MANUAL RELEASE FOR FM-200 SYSTEM
	SPEAKER/STROBE NOTIFICATION DEVICE
	SPEAKER ONLY NOTIFICATION DEVICE
C	CEILING MOUNTED SPEAKER ONLY NOTIFICATION DEVICE
	STROBE ONLY NOTIFICATION DEVICE
B	BLUE STROBE FOR FM200 DISCHARGE INDICATION
	TAMPER SWITCH
	WATER FLOW SWITCH
	EXTERIOR STROBE
	ELECTRIC BELL
MM	MONITOR MODULE
CM	CONTROL MODULE
MIC	PA MICROPHONE STATION

THESE DRAWINGS ARE "NOT APPROVED FOR CONSTRUCTION" SINCE THESE ARE BASED UPON ASSUMED CONDITIONS. THE CONTRACTOR SHALL NOT PROCEED WITH CONSTRUCTION UNTIL THE ASSUMED CONDITIONS ARE VALIDATED AND APPROVAL IS RECEIVED FROM THE CONTRACTING OFFICER.

COMMONWEALTH OF MASSACHUSETTS
JEFFREY L. McNAMES
FIRE PROTECTION
No. 41002
REGISTERED PROFESSIONAL ENGINEER

2/6/2012

UNLESS OTHERWISE NOTED, LINEAR DIMENSIONS SHOWN ARE IN METERS.

DESIGN COMPLETE SUBMITTAL

SYMB	DESCRIPTION	DATE	APR
FNL	DESIGN COMPLETE SUBMITTAL	02-06-12	JLD

DESIGNED BY: JLD
DATE: 02-06-2012
DRAWN BY: JLD
SUBMITTED BY: TETRA TECH / FRM
CHECKED BY: WMC
FILE NO.: AF1202$-SF001GN

TETRA TECH

US Army Corps of Engineers
Middle East District

COMMAND & CONTROL FACILITY
KANDAHAR AIR FIELD, AFGHANISTAN
STANDARD DRAWINGS
GENERAL FIRE ALARM NOTES AND SYMBOLS

SHEET REFERENCE NUMBER:
$
SF-001

W:\23308\127-23308-11004\CAD\MED Drawings\AF1202\Standards\Fire Protection\AF1202$-SF001GN.dwg 3/8/2012 10:59:56 AM Jeffers, Scott

SPRINKLER SYSTEM GENERAL NOTES

1. ALL SPRINKLER GENERAL NOTES, SYMBOLS LISTS & DETAILS ARE TO BE CONSIDERED AS APPLICABLE TO ALL SPRINKLER DRAWINGS FOR THIS PROJECT.
2. THE DRAWINGS ARE DIAGRAMMATIC IN NATURE AND EXACT LOCATIONS AND ARRANGEMENTS OF EXIST./NEW EQUIPMENT, DUCTWORK, PIPING AND OTHER COMPONENTS SHALL BE DETERMINED IN THE FIELD WITH DUE CONSIDERATION OF STRUCTURAL, ELECTRICAL AND ARCHITECTURAL SYSTEMS. EXISTING STRUCTURAL SYSTEMS SHALL NOT BE MODIFIED WITHOUT THE EXPRESS PERMISSION OF THE ENGINEER.
3. AT THE END OF EACH WORKING DAY, THE CONSTRUCTION SITE SHALL BE LEFT IN A CLEAN AND NEAT CONDITION.
4. FIRE SUPPRESSION SYSTEMS SHOWN ARE DIAGRAMMATIC AND FOR REFERENCE. DRAWINGS SHOW EXISTING PIPING MAINS AND SUGGESTED ROUTING. CONTRACTOR MAY ALTER PIPING AND HEAD LOCATION WITH APPROVAL OF OWNER, ARCHITECT, AND GENERAL CONTRACTOR.
5. FIRE PROTECTION CONTRACTOR SHALL ENSURE PROPOSED FIRE PROTECTION SYSTEM DESIGN MEETS ALL REQUIREMENTS OF NFPA–13 AND AUTHORITY HAVING JURISDICTION REQUIREMENTS.
6. SPRINKLER SYSTEM SHALL BE HYDRAULICALLY DESIGNED TO PROVIDE MINIMUM FLOW RATES AT HYDRAULICALLY MOST REMOTE AREA AS REQUIRED BY UFC 3–600–01.
7. SPRINKLER CRITERIA:
   WET SYSTEM PER NFPA–13
   2009 NFPA–101 LIFE SAFETY CODE
   INTERNATIONAL BUILDING CODE 2009
   CONSTRUCTION TYPE: TYPE IIB
   UFC 3–600–01 REQUIREMENTS
   SEE SPECIFICATION SECTIONS 213000 & 211313
8. REFER TO PERFORMANCE SPECIFICATIONS.
9. TAMPER SWITCHES ON SHUT–OFF VALVES SHALL REPORT "SUPERVISORY" SIGNAL TO FIRE ALARM PANEL.
10. INSPECTION/TEST DRAIN ASSEMBLES SHALL BE PIPED TO GRADE. COORDINATE LOCATIONS WITH OWNERS REPRESENTATIVE. PIPING LOCATED OUTSIDE OF THE BUILDING SHALL BE GALVANIZED STEEL.
11. ALL PIPE PENETRATIONS THRU FIRE RATED FLOOR/CEILING ASSEMBLIES SHALL BE FIREPROOFED BY THE SPRINKLER CONTRACTOR AS REQUIRED TO MEET RATING.
12. DO NOT ORDER SPRINKLER HEADS UNTIL APPROVAL IS RECEIVED FROM ARCHITECT FOR ALL AREAS AND APPLICATIONS. REFER TO ARCHITECTURAL PLANS, DETAILS, AND SPECIFICATIONS FOR COMPLETE BUILDING DEFINITION.
13. MANUFACTURERS NAME & MODEL NUMBER ARE USED FOR DESCRIPTIVE PURPOSES ONLY & ARE INTENDED TO INDICATE THE STANDARD OF MATERIAL OR ARTICLES REQUIRED. A SUBSTITUTE MAY BE SUBMITTED IN ACCORDANCE WITH THE REQUIREMENTS OF THE "SUBSTITUTION" SPECIFICATION SECTION.
14. INSTALL EQUIPMENT IN ACCORDANCE WITH THE MANUFACTURER'S RECOMMENDATIONS AND GOOD PRACTICE NORMAL TO THE TRADE. INSTALLATION SHALL INCLUDE PROVISIONS FOR ACCESS TO NORMAL MAINTENANCE ITEMS SUCH AS BELTS, BEARINGS, FILTERS AND MOTORS. PROVIDE ADEQUATE STRUCTURAL SUPPORTS AND SECURE MOUNTING METHODS WITH PROVISIONS FOR VIBRATION ISOLATION AND EXPANSION WHERE REQUIRED.
15. INSTALLATION SHALL PERMIT, ACCESSIBILITY FOR SERVICE AND/OR REPLACEMENT OF EQUIPMENT PROVIDED.
16. PROVIDE CLAMPS, HANGERS, OFFSETS, EXPANSION JOINTS, ANCHORS & GUIDES AS NECESSARY TO PREVENT UNDUE STRAIN ON PIPING IN ACCORDANCE WITH NFPA 13 – CHAPTER 9. (SEE ALSO TABLE 9.2.2.1 FOR HANGER SPACING)
17. PIPING SHALL BE EXPOSED UNLESS OTHERWISE NOTED.
18. SEE DETAILS & PIPING DIAGRAMS FOR ADDITIONAL VALVES & FITTINGS NECESSARY FOR COMPLETE PIPING SYSTEM.
19. SPRINKLER CONTRACTOR TO COORDINATE ALL WORK WITH OTHER BUILDING TRADES. OR DUCTWORK. SPRINKLER CONTRACTOR SHALL SUBMIT A COORDINATION DRAWING WITH PIPING ELEVATIONS SHOWN TO PREVENT CONSTRUCTION AND OPERATING INTERFERENCE.
20. FILL AND PATCH ALL OPENINGS IN WALLS WHERE CONDUITS, PIPES, DUCTS ETC. PENETRATE FIRE RATED WALLS. UL LISTED PENETRATION PROTECTION ASSEMBLIES SHALL BE USED.
21. TIE–IN POINT LOCATIONS ARE APPROXIMATE. CONTRACTOR SHALL DETERMINE EXACT LOCATIONS IN THE FIELD BASED ON EXISTING CONDITIONS.
22. CONTRACTOR SHALL PROVIDE SEISMIC SWAY BRACING IN ACCORDANCE WITH NFPA 13.
23. CONNECT ALL ALARM DEVICES DESCRIBED IN SPECIFICATION AND DRAWINGS TO FIRE ALARM SYSTEM.
24. PROVIDE LOW POINT DRAINS THROUGHOUT BUILDINGS IN ACCORDANCE WITH NFPA 13.
25. SEE SPRINKLER SCHEDULE FOR TEMPERATURE RATING.
26. SPRINKLERS TO BE POSITIONED AWAY FROM OBSTRUCTIONS IN ACCORDANCE WITH NFPA 13.
27. SPRINKLERS LOCATED NEAR UNIT SPACE HEATERS SHALL HAVE HIGH TEMP. RATING IN ACCORDANCE WITH NFPA 13.
28. SPRINKLERS SHALL BE PROVIDED BENEATH OBSTRUCTIONS GREATER THAN 1.2 METERS (4 FEET) IN WIDTH (I.E. DUCTWORK). COORDINATE WITH ALL DISCIPLINES.
29. COORDINATE LOCATION OF ELECTRIC BELL AND FIRE DEPARTMENT CONNECTION WITH BASE FIRE DEPARTMENT.
30. THE SIZING OF THE FIRE WATER STORAGE TANKS AND FIRE PUMPS ARE BASED ON INFORMATION PROVIDED IN THE UFC 3–600–01. UFC 3–600–01 REQUIRES PROTECTION FOR AUDITORIUMS AS ORDINARY HAZARD GROUP I PER NFPA 13.
31. HYDRAULIC INFORMATION IS PROVIDED NEXT TO MOST REMOTE AREAS.

FM200 GENERAL NOTES

1. ALL FM 200 GENERAL NOTES, SYMBOLS LISTS & DETAILS ARE TO BE CONSIDERED AS APPLICABLE TO ALL FM 200 DRAWINGS FOR THIS PROJECT.
2. THE DRAWINGS ARE DIAGRAMMATIC IN NATURE AND EXACT LOCATIONS AND ARRANGEMENTS OF NEW EQUIPMENT, DUCTWORK, PIPING AND OTHER COMPONENTS SHALL BE DETERMINED IN THE FIELD WITH DUE CONSIDERATION OF STRUCTURAL, ELECTRICAL AND ARCHITECTURAL SYSTEMS. EXISTING STRUCTURAL SYSTEMS SHALL NOT BE MODIFIED WITHOUT THE EXPRESS PERMISSION OF THE ENGINEER.
3. AT THE END OF EACH WORKING DAY, THE CONSTRUCTION SITE SHALL BE LEFT IN A CLEAN AND NEAT CONDITION.
4. FM 200 SYSTEMS SHOWN ARE DIAGRAMMATIC AND FOR REFERENCE. DRAWINGS SHOW PIPING MAINS AND SUGGESTED ROUTING. CONTRACTOR MAY ALTER PIPING AND HEAD LOCATION WITH APPROVAL OF OWNER, ARCHITECT, AND GENERAL CONTRACTOR.
5. FIRE PROTECTION CONTRACTOR SHALL ENSURE PROPOSED FM 200 SYSTEM DESIGN MEETS ALL REQUIREMENTS OF NFPA–2001 AND AUTHORITY HAVING JURISDICTION REQUIREMENTS.
6. FM 200 CRITERIA:
   NFPA 2001 – 2010 EDITION
   2009 NFPA–101 LIFE SAFETY CODE
   INTERNATIONAL BUILDING CODE 2009
   CONSTRUCTION TYPE: TYPE IIB
   UFC 3–600–01 REQUIREMENTS
   SEE SPECIFICATION SECTIONS 212200
7. REFER TO PERFORMANCE SPECIFICATIONS.
8. MANUFACTURERS NAME & MODEL NUMBER ARE USED FOR DESCRIPTIVE PURPOSES ONLY & ARE INTENDED TO INDICATE THE STANDARD OF MATERIAL OR ARTICLES REQUIRED. A SUBSTITUTE MAY BE SUBMITTED IN ACCORDANCE WITH THE REQUIREMENTS OF THE "SUBSTITUTION" SPECIFICATION SECTION.
9. INSTALL EQUIPMENT IN ACCORDANCE WITH THE MANUFACTURER'S RECOMMENDATIONS AND GOOD PRACTICE NORMAL TO THE TRADE. INSTALLATION SHALL INCLUDE PROVISIONS FOR ACCESS TO NORMAL MAINTENANCE ITEMS SUCH AS BELTS, BEARINGS, FILTERS AND MOTORS. PROVIDE ADEQUATE STRUCTURAL SUPPORTS AND SECURE MOUNTING METHODS WITH PROVISIONS FOR VIBRATION ISOLATION AND EXPANSION WHERE REQUIRED.
10. INSTALLATION SHALL PERMIT, ACCESSIBILITY FOR SERVICE AND/OR REPLACEMENT OF EQUIPMENT PROVIDED.
11. PIPING SHALL BE EXPOSED UNLESS OTHERWISE NOTED.
12. SEE DETAILS & PIPING DIAGRAMS FOR ADDITIONAL VALVES & FITTINGS NECESSARY FOR COMPLETE PIPING SYSTEM.
13. FM 200 CONTRACTOR TO COORDINATE ALL WORK WITH OTHER BUILDING TRADES. OR DUCTWORK. SPRINKLER CONTRACTOR SHALL SUBMIT A COORDINATION DRAWING WITH PIPING ELEVATIONS SHOWN TO PREVENT CONSTRUCTION AND OPERATING INTERFERENCE.
14. CONNECT ALL ALARM DEVICES DESCRIBED IN SPECIFICATION AND DRAWINGS TO FIRE ALARM SYSTEM.
15. THE SIZING OF THE FM 200 TANK SHALL BE BASED ON NFPA 2001. IN ADDITION, VOLUME UNDER THE FLOOR AND WITHIN THE 1–HOUR ENCLOSURE SHALL BE INCLUDED IN THE CALCULATION.

GENERAL ABBREVIATIONS

ABBREVIATIONS	DESCRIPTIONS
AFF	ABOVE FINISHED FLOOR
AP	ACCESS PANEL
ARCH	ARCHITECT
BS	BELOW SLAB (TYPE "K" COPPER)
CAP	CAPACITY
CO	CLEAN OUT
CONN	CONNECT
CONTR	CONTRACTOR
CP	CONTROL PANEL
CV	CONTROL VALVE
DDC	DIRECT DIGITAL CONTROL
DIA	DIAMETER
DN	DOWN
DR	DRAIN
DWG OR DWGS	DRAWINGS
E, EX OR (E)	EXISTING
EA.	EACH
EC	ELECTRICAL CONTRACTOR
ETBR	EXISTING TO BE REMOVED
ETR	EXISTING TO REMAIN
FACP	FIRE ALARM CONTROL PANEL
FC	FLEXIBLE CONNECTION
FD	FLOOR DRAIN
FDTP	FLOOR DRAIN W/ TRAP PRIMER
FPHB	FREEZE PROOF HOSE BIBB
FSD	COMBINATION FIRE AND SMOKE DAMPER
GC	GENERAL CONTRACTOR
GPM	GALLONS PER MINUTE
GV	GATE VALVE
H	HEIGHT
HP	HORSE POWER
I.P.C.	INTERNATIONAL PLUMBING CODE
ID	INSIDE DIAMETER
KPA	KILOPASCALS
KW	KILOWATTS
LPS	LITERS PER SECOND
M	METERS
MM	MILLIMETERS
MTD	MOUNTED
N.C. OR NC	NORMALLY CLOSED
N.O. OR NO	NORMALLY OPEN
NFPA	NATIONAL FIRE PROTECTION ASSOCIATION
NIC	NOT IN CONTRACT
NTS	NOT TO SCALE
OD	OUTSIDE DIAMETER
PC	PLUMBING CONTRACTOR
PD	PRESSURE DROP
RM	ROOM
RV	RELIEF VALVE
SP	STATIC PRESSURE
SS	STAINLESS STEEL
TOD	TOP OF DUCT
TYP	TYPICAL
UC	UNDERCUT DOOR
UL	UNDERWRITER'S LABORATORY
V	VENT
VTR	VENT THROUGH ROOF
W	WASTE
W/	WITH
WMS	WIRE MESH SCREEN

FIRE SUPPRESSION SYMBOLS

SYMBOLS	ABBREVIATIONS	DESCRIPTIONS
		POINT OF CONNECTION
(1)		NOTE CALL OUT
ØP		PRESSURE GAUGE W/PETCOCK
F		FLOW SWITCH
PS		PRESSURE SWITCH
ØT		THERMOMETER W/IMMERSION WELL
	BFV	BUTTERFLY VALVE
	SCV	SWING CHECK VALVE
	GV	GATE VALVE
	GLV	GLOBE VALVE
		INDICATING TYPE VALVE W/ SUPERVISORY SWITCH (UNLESS NORMALLY CLOSED)
	FLG	FLANGE
		STRAINER W/DRAIN VALVE AND CAP
		DRAIN VALVE AND CAP
	PGV	PLUG VALVE
	BV	BALL VALVE
	CRD	CONCENTRIC REDUCER (ENLARGER)
	ERD	ECCENTRIC REDUCER (ENLARGER)
	RSV	RELIEF OR SAFETY VALVE
	LCV	LIFT CHECK VALVE
12ø, 12x12		DUCT SIZE
305mm		PIPE SIZE (DIAMETER)
305mm S UP 356mm DN 38mm		PIPE SIZE, GANG RISER (DIAMETER)
		PENDANT RECESSED SPRINKLER
		UPRIGHT SPRINKLER
		PENDANT SPRINKLER
		DRY SIDEWALL SPRINKLER
	FDC	FIRE DEPARTMENT CONNECTION
	FDV	FIRE DEPARTMENT VALVE
XX		HYDRAULIC REFERENCE NODE
TS		TAMPER SWITCH
	SPR	SPRINKLER PIPING
	FM	FM 200 PIPING
		PIPE DROP
		PIPE RISER
		PIPE TEE – DOWN
		PIPE TEE – UP
		PIPE CONNECTION
		PIPE BREAK – TO CONTINUE
		DIRECTION OF FLOW
		PIPE SLOPE
		LATERAL TWO–WAY BRACE
		LONGITUDINAL TWO–WAY BRACE
		FOUR–WAY BRACE
		HANGER
(N)		FM 200 NOZZLE
		FM 200 TANK

NEW SPRINKLER SCHEDULE

SYMBOL	MFG.	MODEL NO.	STYLE	LOCATION	K FACTOR	TEMPERATURE RATING	SPRINKLER FINISH	ESCUTCHEON OR PLATE FINISH	COATING	REMARKS
○	TYCO	TY3131	UPRIGHT	VARIOUS	80	68 C OR AS NOTED	BRASS	N/A	–	QUICK RESPONSE
●	TYCO	TY3231	PENDANT	VARIOUS	80	68 C OR AS NOTED	BRASS	CHROME	–	QUICK RESPONSE GUARDS REQ'D WHEN NEC.

MAXIMUM DISTANCE BETWEEN HANGERS (M)

	NOMINAL PIPE SIZE (MM)							
	25	32	40	50	65	80	90	100
STEEL PIPE – SCH 10/40	3.66	3.66	4.57	4.57	4.57	4.57	4.57	4.57

THESE DRAWINGS ARE "NOT APPROVED FOR CONSTRUCTION" SINCE THESE ARE BASED UPON ASSUMED CONDITIONS. THE CONTRACTOR SHALL NOT PROCEED WITH CONSTRUCTION UNTIL THE ASSUMED CONDITIONS ARE VALIDATED AND APPROVAL IS RECEIVED FROM THE CONTRACTING OFFICER.

UNLESS OTHERWISE NOTED, LINEAR DIMENSIONS SHOWN ARE IN METERS.

DESIGN COMPLETE SUBMITTAL

SYMB	DESCRIPTION	DATE	APR
FNL	DESIGN COMPLETE SUBMITTAL	02–06–12	JLD

DESIGNED BY: JLD
DATE: 02–06–2012
DRAWN BY: JLD
SUBMITTED BY: TETRA TECH / FRM
CHECKED BY: SKD
FILE NO.: AF1202$–SF002GN

TETRA TECH
FIRE RISK MANAGEMENT, INC.
US Army Corps of Engineers
Middle East District

COMMAND & CONTROL FACILITY
KANDAHAR AIR FIELD, AFGHANISTAN
STANDARD DRAWINGS
GENERAL FIRE SUPPRESSION NOTES AND SYMBOLS

SHEET REFERENCE NUMBER:
$
SF–002

W:\23308\127–23308–11004\CAD\MED Drawings\AF1202\Standards\Fire Protection\AF1202$–SF002GN.dwg 3/8/2012 11:00:12 AM Jeffers, Scott

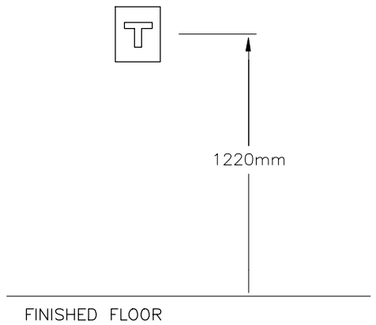

MANUAL PULL STATION MOUNTING HEIGHT (1 / VARIOUS SF-500)

SCALE N.T.S.

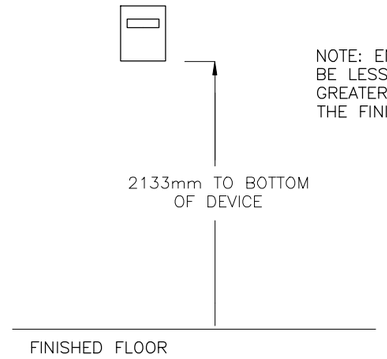

NOTE: ENTIRE LENS SHALL NOT BE LESS THAN 2030mm OR GREATER THAN 2440mm ABOVE THE FINISHED FLOOR.

STROBE MOUNTING HEIGHT (2 / VARIOUS SF-500)

SCALE N.T.S.

THESE DRAWINGS ARE "NOT APPROVED FOR CONSTRUCTION" SINCE THESE ARE BASED UPON ASSUMED CONDITIONS. THE CONTRACTOR SHALL NOT PROCEED WITH CONSTRUCTION UNTIL THE ASSUMED CONDITIONS ARE VALIDATED AND APPROVAL IS RECEIVED FROM THE CONTRACTING OFFICER.

COMMONWEALTH OF MASSACHUSETTS
JEFFREY L. DeMANS
FIRE PROTECTION
No. 41002
REGISTERED PROFESSIONAL ENGINEER

2/6/2012

UNLESS OTHERWISE NOTED, LINEAR DIMENSIONS SHOWN ARE IN METERS.

DESIGN COMPLETE SUBMITTAL

SYMB	DESCRIPTION	DATE	APR
FNL	DESIGN COMPLETE SUBMITTAL	02-06-12	JLD

DESIGNED BY: JLD	DATE: 02-06-2012
DRAWN BY: JLD	SUBMITTED BY: TETRA TECH / FRM
CHECKED BY: WMC	FILE NO.: AF1202$-SF500DT

TETRA TECH

US Army Corps of Engineers
Middle East District

COMMAND & CONTROL FACILITY
KANDAHAR AIR FIELD, AFGHANISTAN
STANDARD DRAWINGS
FIRE ALARM DETAILS

SHEET REFERENCE NUMBER:
$
SF-500

W:\23308\127-23308-11004\CAD\MED Drawings\AF1202\Standards\Fire Protection\AF1202$-SF500DT.dwg 3/8/2012 11:00:26 AM Jeffers, Scott

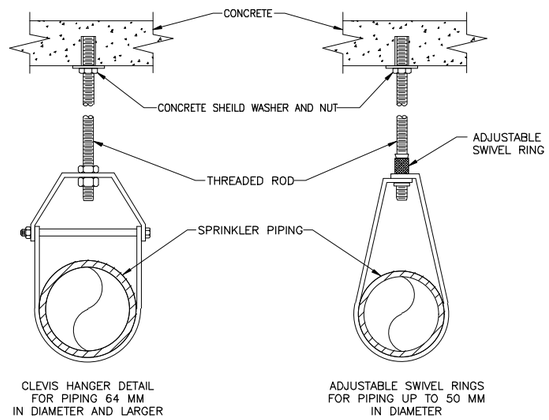

TYPICAL HANGER DETAIL/SCHEDULE (1 / VARIOUS SF-510)

SCALE N.T.S.

NOTE:
FIRE STOPPING METHOD BASED ON HILTI UL SYSTEM WL1058. REFER TO MFG LITERATURE FOR SPECIFIC PRODUCT LIMITATIONS. SUBSTITUTE OTHER UL APPROVED FIRE STOPPING METHODS, IF NECESSARY, TO MEET REQUIREMENTS OF INSTALLATION

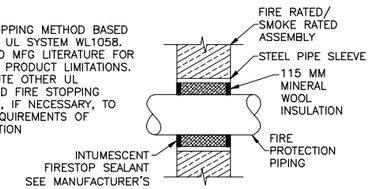

EXAMPLE PENETRATION PROTECTION (2 / VARIOUS SF-510)

SCALE N.T.S.

NOTE: FINAL SIZE OF PIPE STAND SADDLE WILL BE BASED ON PIPE SIZE AND MANUFACTURER AND MODEL SELECTED (I.E. ANVIL INTERNATIONAL OR EQUAL). PIPE STANDS SHOULD BE PROVIDED BELOW VERTICAL RISER VALVES, BELOW CHECK VALVES, AND APPROXIMATELY EVERY 2 m ALONG THE HORIZONTAL PIPE ROUTE. SUPPORT PIPE SHOULD BE 75 mm IN DIAMETER. SADDLE SHOWN IS FOR 200 mm DIAMETER WATER PIPE.

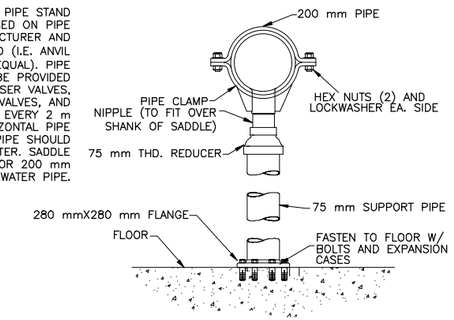

PIPE STAND (3 / F-400 SF-510)

SCALE N.T.S.

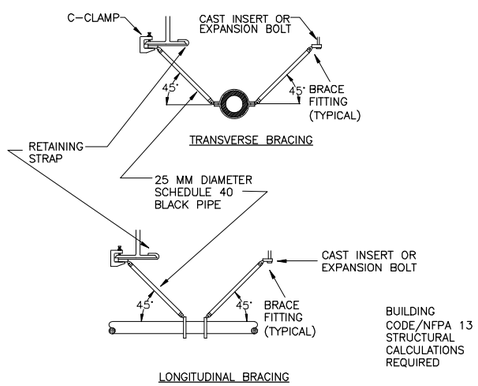

EXAMPLE THRUST RESTRAINT (4 / VARIOUS SF-510)

SCALE N.T.S.

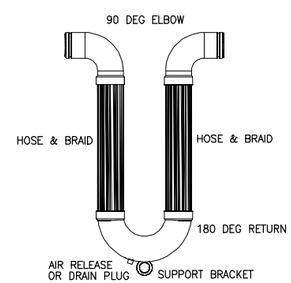

EXAMPLE FLEXIBLE (SEISMIC) JOINT (5 / VARIOUS SF-510)

SCALE N.T.S.

THESE DRAWINGS ARE "NOT APPROVED FOR CONSTRUCTION" SINCE THESE ARE BASED UPON ASSUMED CONDITIONS. THE CONTRACTOR SHALL NOT PROCEED WITH CONSTRUCTION UNTIL THE ASSUMED CONDITIONS ARE VALIDATED AND APPROVAL IS RECEIVED FROM THE CONTRACTING OFFICER.

COMMONWEALTH OF MASSACHUSETTS JEFFREY L. BeMANS CIVIL No. 41002 REGISTERED PROFESSIONAL ENGINEER

2/6/2012

UNLESS OTHERWISE NOTED, LINEAR DIMENSIONS SHOWN ARE IN METERS.

DESIGN COMPLETE SUBMITTAL

SYMB	DESCRIPTION	DATE	APR
FNL	DESIGN COMPLETE SUBMITTAL	02-06-12	JLD

DESIGNED BY: JLD | DATE: 02-06-2012
DRAWN BY: JLD | SUBMITTED BY: TETRA TECH / FRM
CHECKED BY: WMC | FILE NO.: AF1202$-SF510DT

TETRA TECH

US Army Corps of Engineers Middle East District

COMMAND & CONTROL FACILITY
KANDAHAR AIR FIELD, AFGHANISTAN
STANDARD DRAWINGS
FIRE SUPPRESSION DETAILS

SHEET REFERENCE NUMBER: $ SF-510

W:\23308\127-23308-11004\CAD\MED Drawings\AF1202\Standards\Fire Protection\AF1202$-SF510DT.dwg 3/8/2012 11:00:44 AM Jeffers, Scott

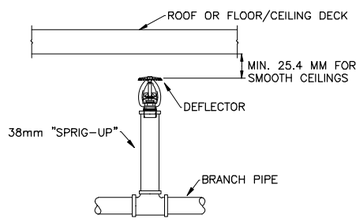

UPRIGHT SPRINKLER DETAIL (1 / VARIOUS SF-511)

SCALE N.T.S.

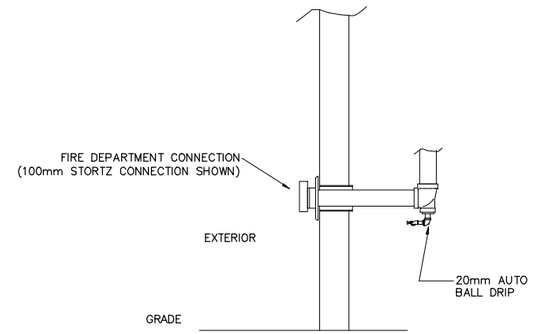

IN WALL FIRE DEPARTMENT CONNECTION DETAIL (2 / VARIOUS SF-511)

SCALE N.T.S.

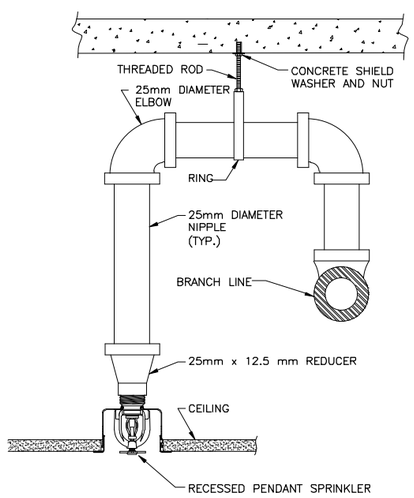

ARM-OVER SPRINKLER DETAIL (4 / VARIOUS SF-511)

SCALE N.T.S.

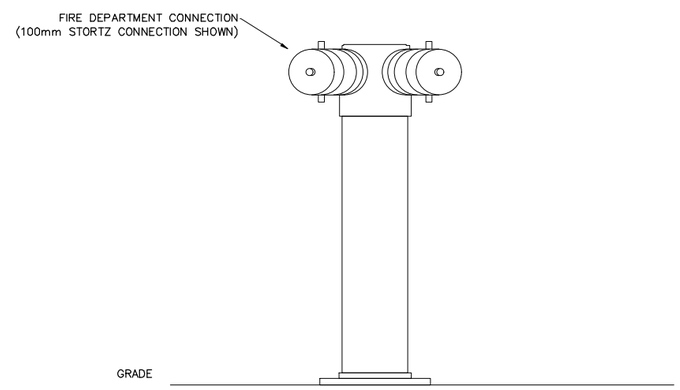

FREE STANDING FIRE DEPARTMENT CONNECTION DETAIL (3 / VARIOUS SF-511)

SCALE N.T.S.

THESE DRAWINGS ARE "NOT APPROVED FOR CONSTRUCTION" SINCE THESE ARE BASED UPON ASSUMED CONDITIONS. THE CONTRACTOR SHALL NOT PROCEED WITH CONSTRUCTION UNTIL THE ASSUMED CONDITIONS ARE VALIDATED AND APPROVAL IS RECEIVED FROM THE CONTRACTING OFFICER.

COMMONWEALTH OF MASSACHUSETTS — JEFFREY L. BRAMME — FIRE PROTECTION — No. 41002 — REGISTERED PROFESSIONAL ENGINEER

2/6/2012

UNLESS OTHERWISE NOTED, LINEAR DIMENSIONS SHOWN ARE IN METERS.

DESIGN COMPLETE SUBMITTAL

SYMB	DESCRIPTION	DATE	
FNL	DESIGN COMPLETE SUBMITTAL	02-06-12	JLD APR

DESIGNED BY: JLD
DATE: 02-06-2012
DRAWN BY: JLD
SUBMITTED BY: TETRA TECH / FRM
CHECKED BY: WMC
FILE NO.: AF1202$-SF511DT

TETRA TECH

US Army Corps of Engineers Middle East District

COMMAND & CONTROL FACILITY
KANDAHAR AIR FIELD, AFGHANISTAN
STANDARD DRAWINGS
FIRE SUPPRESSION DETAILS

SHEET REFERENCE NUMBER:
$
SF-511

W:\23308\127-23308-11004\CAD\MED Drawings\AF1202\Standards\Fire Protection\AF1202$-SF511DT.dwg 3/8/2012 11:01:14 AM Jeffers, Scott

LEGEND

- BALL VALVE
- BUTTERFLY VALVE
- Ø DIAMETER
- GATE VALVE
- HOSE BIBB
- SOLENOID VALVE
- EMERGENCY VALVE
- CHECK VALVE
- CIRC PUMP
- I.V. DRAIN VALVE
- UNION
- CAPPED / PLUGGED CONNECTION
- REDUCER – INCREASER
- PIPE BREAK
- PIPE TURNING DOWN
- PIPE TURNING UP
- SUPPORT LOCATION
- FOS FUEL OIL SUPPLY
- FOR FUEL OIL RETURN
- FOF FUEL OIL FILL

DETAIL TITLE

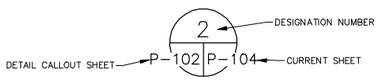

DETAIL CALLOUT

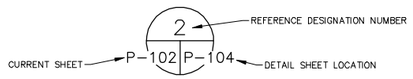

GENERAL NOTES

1. INTERIOR SOIL AND WASTE PIPING 80mm AND SMALLER SHALL BE ROUTED WITH A 2% SLOPE. INTERIOR SOIL AND WASTE PIPING 100mm AND LARGER SHALL BE ROUTED WITH A MINIMUM 1% SLOPE.
2. ALL DIMENSION HERE ON PLANS ARE IN mm UNLESS OTHERWISE INDICATED.
3. REFER TO CIVIL DRAWINGS FOR DOMESTIC WATER SUPPLY AND SANITARY WASTE WATER COLLECTION.
4. EXPOSED PIPING SHALL BE INSTALLED TIGHT TO THE WALLS AND CEILINGS.
5. MINIMUM BURIED PIPE SIZE SHALL BE 50 mm.
6. FOR FLOOR / WALL PENETRATION DETAILS REFER TO "A" DRAWINGS.

- SOIL OR WASTE PIPE ABOVE FLOOR
- SOIL OR WASTE PIPE BELOW FLOOR (MIN. 50 SIZE)
- COLD WATER, DOMESTIC (PLAN)
- HOT WATER, DOMESTIC (PLAN)
- HOT WATER RETURN, DOMESTIC (PLAN)
- V VENT PIPE
- FOS FUEL OIL SUPPLY
- FOR FUEL OIL RETURN
- FOF FUEL OIL FILL

ABBREVIATIONS

AFF	ABOVE FINISHED FLOOR
ALUM	ALUMINUM
AP	ACCESS PANEL
BLDG	BUILDING
°C	DEGREES CELSIUS
CA	COMPRESSED AIR
CIRC	CIRCULATION
CLG	CEILING
CM	CENTIMETER
CO	CLEAN OUT
CONN	CONNECTION
CONT	CONTINUATION
CW	COLD WATER
DIA	DIAMETER
DN	DOWN
DWG	DRAWING
ELE	ELEVATION
ELEC	ELECTRICITY/ELECTRICAL
EM	EMERGENCY
EQUIP	EQUIPMENT
EWH	ELECTRIC WATER HEATER
EQ	EQUAL
EXT	EXTERNAL/EXTERIOR
°F	DEGREES FAHRENHEIT
FCO	FLOOR CLEAN OUT
FD	FLOOR DRAIN
FFE	FINISHED FLOOR ELEVATION
FLR	FLOOR
FS	FLOOR SINK
GAL	GALLONS
GPH	GALLONS PER HOUR
HORIZ	HORIZONTAL
HP	HORSEPOWER
HR	HOUR
HW	HOT WATER
HZ	HERTZ
ID	INSIDE DIAMETER
INT	INTERIOR
INV.EL.	INVERT ELEVATION
KG	KILOGRAM
KW	KILOWATT
KPA	KILOPASCALS
LAV	LAVATORY
LIT	LITERS
LPM	LITERS PER MINUTE
LPH	LITERS PER HOUR
M (m)	METER
M^2	SQUARE METER
M^3	CUBIC METER
MAX	MAXIMUM
MECH	MECHANICAL
MIN	MINIMUM
MISC	MISCELLANEOUS
MM (mm)	MILLIMETER
MS	MOP SINK
NC	NORMALLY CLOSED
NFPA	NATIONAL FIRE PROTECTION ASSOCIATION
NO	NORMALLY OPEN/NUMBER
NOM	NOMINAL
NST	NATIONAL STANDARD THREAD
NTS	NOT TO SCALE
ϕ	PHASE
PD	PRESSURE DIFFERENTIAL
PRESS	PRESSURE PRESSURE
PRV	REDUCING VALVE
PSIG	POUNDS PER SQUARE INCH GAUGE
QTY	QUANTITY
RD	ROOF DRAIN
REQ'D	REQUIRED
RM	ROOM
SAN	SANITARY
SHR	SHOWER
SOV	SHUT–OFF VALVE
SPEC(S)	SPECIFICATION(S)
SQ M	SQUARE METER
SS	STAINLESS STEEL
STRU	STRUCTURAL
TCV	TEMPERATURE CONTROL VALVE
TEMP	TEMPERATURE
TK	TANK
TMV	THERMOSTATIC MIXING VALVE
TYP	TYPICAL
THRU	THROUGH
UL	UNDERWRITER'S LABORATORIES
UR	URINAL
V	VENT
VEL	VELOCITY
VTR	VENT THROUGH ROOF
W/	WITH
WC	WATER CLOSET
WCO	WALL CLEAN OUT
WF	WALL FAUCET
WH	WALL HYDRANT
WWP	WORKING WATER PRESSURE

MATERIAL SPECIFICATIONS

FUEL STORAGE TANK: UL 142 LISTED, SINGLE WALL, FACTORY WELDED STEEL STORAGE TANK WITH FACTORY SUPPLIED TANK SADDLES, INTERNAL AND EXTERNAL LADDERS, IMPACT PLATES. LOCATED UNDER ALL OPENINGS.

MANHOLE: UL LISTED STEEL COVER WITH GASKET. SEE PLANS FOR SIZES

TANK VENT: ALUMINUM BODY WITH BRASS SCREEN UPDRAFT VENT

TANK EMERGENCY VENT: UL LISTED ALUMINUM EMERGENCY VENT TESTED WITH ASME PTC25.3–1988 SETTINGS. CAPACITY TO MATCH TANK SIZE

REMOTE FILL PORT: 80mm FILL BOX AND SPILL CONTAINER WITH 18.9 LITER LIQUID CAPACITY, QUICK OPENING COVER, HIGH SPEED INTERNAL DRAIN, INNER CAP AND CAST ALUMINUM COVER, QUICK DETACHABLE COUPLING WITH CHECK VALVE AND SHUTOFF BALL VALVE.

FUEL TRANSFER PUMPS: DUPLEX PUMP SET WITH EACH PUMP DELIVERING 549 LPH AT 2.39KPA

OVERFILL PREVENTION VALVE: UL LISTED VALVE WITH CAST ALUMINUM BODY AND POPPET, NITRILE FLOAT DESIGNED TO CLOSE OFF FILL PORT AS TANK NEARS FULL CAPACITY.

ALL ABOVE GROUND FUEL PIPING SHALL BE SCHEDULE 40 BLACK STEEL WITH THREADED FITTINGS.

CONTRACTOR SHALL PROVIDE A FULL SUPPLY OF FUEL TO TANK AT THE TIME OF TURNOVER TO THE GOVERNMENT.

SANITARY SEWER AND VENT: POLYVINYL CHLORIDE (PVC) CONFORMING TO ASTM D 2665. JOINTS SHALL BE MADE USING SOLVENT CEMENTS MEETING THE REQUIREMENTS OF ASTM D 2564.

DOMESTIC WATER PIPING: ASTM D 2846, USING ASTM F441 SCHEDULE 80 CHLORINATED POLYVINYL CHLORIDE (CPVC) PIPE. JOINTS SHALL BE MADE USING SOLVENT CEMENTS MEETING THE REQUIREMENTS OF ASTM F493. DOMESTIC WATER DISTRIBUTION SYSTEM SHALL BE INSULATED WITH CELLULAR GLASS OR FLEXIBLE ELASTOMERIC CELLULAR INSULATION AND INSULATED FITTING COVERS.

PLUMBING FIXTURES: WATER CLOSETS AND LAVATORIES SHALL BE COMMERCIAL GRADE FIXTURES MADE FROM VITREOUS CHINA. THE WATER CLOSETS SHALL BE FLOOR MOUNTED, ELONGATED BOWL, TANK TYPE DESIGN. LAVATORIES SHALL BE WALL HUNG AND SHALL INCLUDE CAST BRASS, SINGLE LEVER MIXING TYPE FAUCET.

THE MOP SINK SHALL BE COMMERCIAL GRADE MOLDED STONE MATERIAL WITH A COMMERCIAL CAST BRASS FAUCET.

THESE DRAWINGS ARE "NOT APPROVED FOR CONSTRUCTION" SINCE THESE ARE BASED UPON ASSUMED CONDITIONS. THE CONTRACTOR SHALL NOT PROCEED WITH CONSTRUCTION UNTIL THE ASSUMED CONDITIONS ARE VALIDATED AND APPROVAL IS RECEIVED FROM THE CONTRACTING OFFICER.

2/6/2012

UNLESS OTHERWISE NOTED, LINEAR DIMENSIONS SHOWN ARE IN METERS.

DESIGN COMPLETE SUBMITTAL

SYMB	DESCRIPTION	DATE	APR
FNL	DESIGN COMPLETE SUBMITTAL	02–06–12	KCT

DESIGNED BY: DCG
DATE: 02–06–2012
DRAWN BY: BCL
SUBMITTED BY: TETRA TECH
CHECKED BY: GPD
FILE NO.: AF1202$–SP001GN

TETRA TECH

US Army Corps of Engineers
Middle East District

COMMAND & CONTROL FACILITY
KANDAHAR AIR FIELD, AFGHANISTAN
STANDARD DRAWINGS
GENERAL NOTES, ABBREVIATIONS AND LEGEND

SHEET REFERENCE NUMBER:
$
SP–001

W:\23308\127–23308–11004\CAD\MED Drawings\AF1202\Standards\Plumbing\AF1202$–SP001GN.dwg 3/7/2012 10:14:57 AM Jeffers, Scott

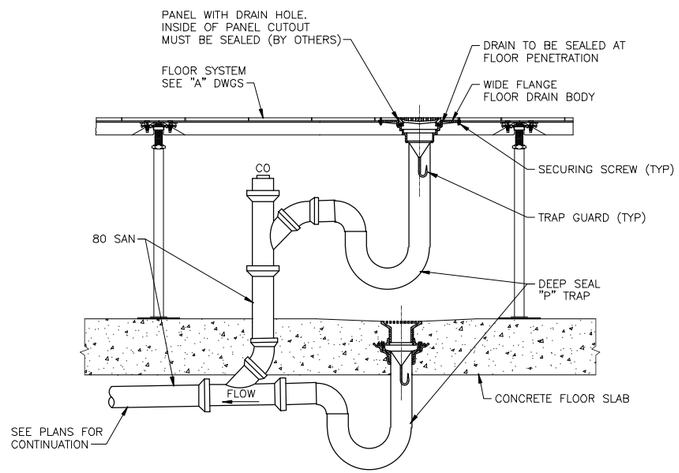

FLOOR DRAIN THROUGH ACCESS FLOOR

SCALE NONE

6 | SP-500 | SP-500

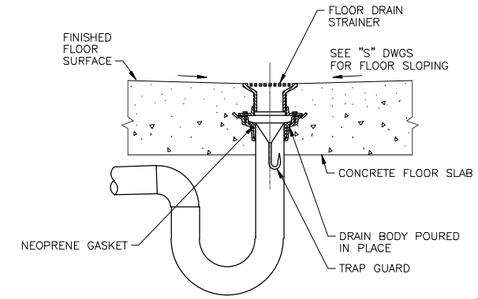

DEEP SEAL "P" TRAP

TYP ALL FLOOR DRAINS

SCALE NONE

3 | SP-500 | SP-500

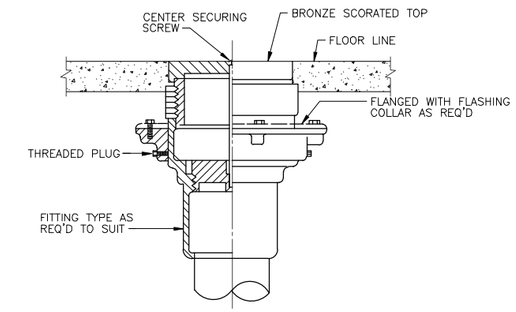

FLOOR CLEANOUT

SCALE NONE

1 | SP-500 | SP-500

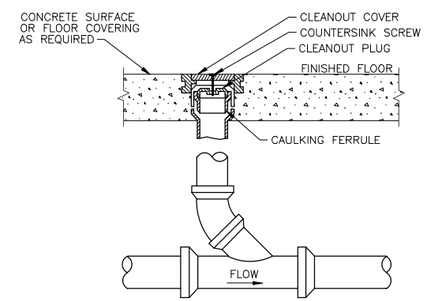

FLOOR CLEANOUT-FINISHED ROOMS

SCALE NONE

4 | SP-500 | SP-500

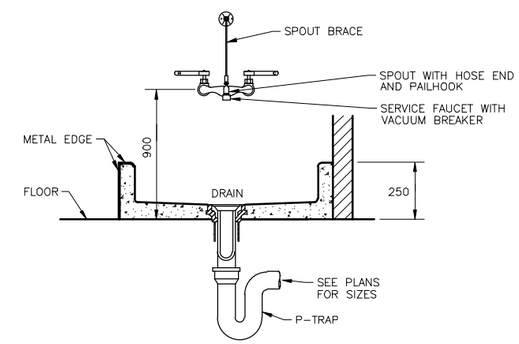

MOP SINK DETAIL

SCALE NONE

2 | SP-500 | SP-500

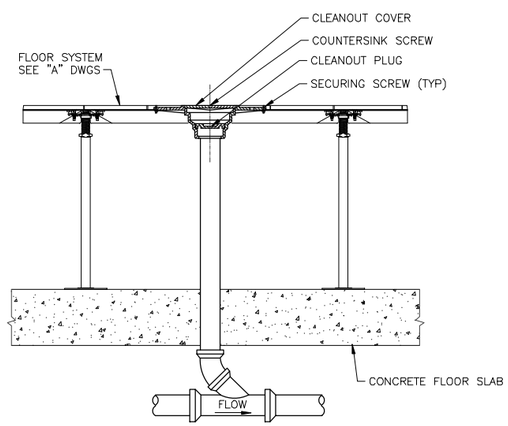

FLOOR CLEANOUT THROUGH ACCESS FLOOR

SCALE NONE

7 | SP-500 | SP-500

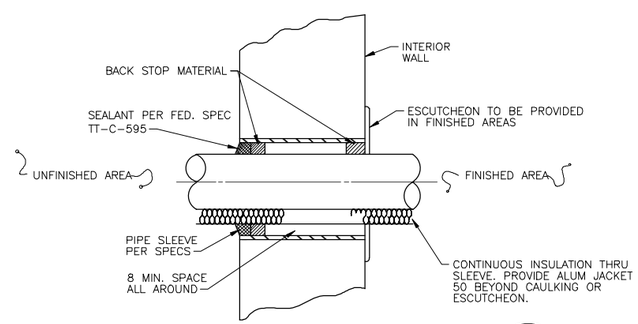

WALL PIPE SLEEVE DETAIL

SCALE NONE

5 | SP-500 | SP-500

THESE DRAWINGS ARE "NOT APPROVED FOR CONSTRUCTION" SINCE THESE ARE BASED UPON ASSUMED CONDITIONS. THE CONTRACTOR SHALL NOT PROCEED WITH CONSTRUCTION UNTIL THE ASSUMED CONDITIONS ARE VALIDATED AND APPROVAL IS RECEIVED FROM THE CONTRACTING OFFICER.

STATE OF NEW YORK · KEVIN CHARLES TERRY · 073093 · LICENSED PROFESSIONAL ENGINEER

2/6/2012

UNLESS OTHERWISE NOTED, LINEAR DIMENSIONS SHOWN ARE IN METERS.

DESIGN COMPLETE SUBMITTAL

SYMB	DESCRIPTION	DATE	APR
FNL	DESIGN COMPLETE SUBMITTAL	02-06-12	KCT

DESIGNED BY: DCG
DATE: 02-06-2012
DRAWN BY: BCL
SUBMITTED BY: TETRA TECH
CHECKED BY: GPD
FILE NO.: AF1202$-SP500DT

TETRA TECH

US Army Corps of Engineers
Middle East District

COMMAND & CONTROL FACILITY
KANDAHAR AIR FIELD, AFGHANISTAN
STANDARD DRAWINGS
PLUMBING DETAILS

SHEET REFERENCE NUMBER:
$
SP-500

W:\23308\127-23308-11004\CAD\MED Drawings\AF1202\Standards\Plumbing\AF1202$-SP500DT.dwg 3/7/2012 10:15:43 AM Jeffers, Scott

FUEL TANK AND FUEL PUMP SCHEDULE

NO. REQUIRED	TANK TYPE	TANK CAPACITY (LIT.)/(GAL)	SIZE L/W	FUEL FLOW (LPH)/(GPH)	ELECTRIC				BUILDING
					MOTOR HP	VOLTS	HERTZ	PHASE	
1 DUPLEX	PUMPS	--	1000mmX900mm	549/145	(2) 1/2	208V	60	3	BOTH FACILITIES
1	BULK TANK	45,780/12,094	6,502mm X 2,997mm	--	--	--	--	--	SOF/JOC
1	BULK TANK	40,085/10,589	6,000mm X 3,000mm	--	--	--	--	--	COMMAND AND CONTROL

NOTE: 1. SUNSHADE OR CANOPY FOR PROTECTION OF GENERATOR AND FUEL TANK EQUIPMENT SHALL BE INSTALLED. SEE CIVIL DRAWINGS. CONTRACTOR SHALL DESIGN PER SPECIFICATION SECTION 05 50 13.

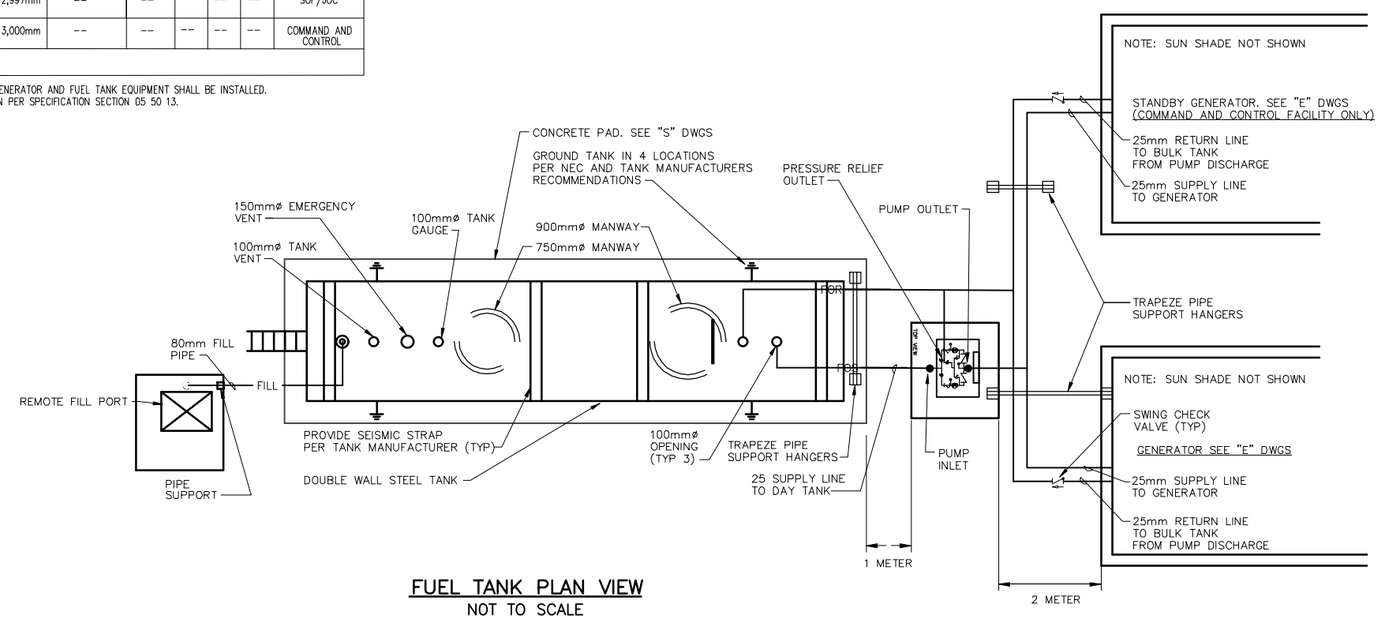

FUEL TANK PLAN VIEW
NOT TO SCALE

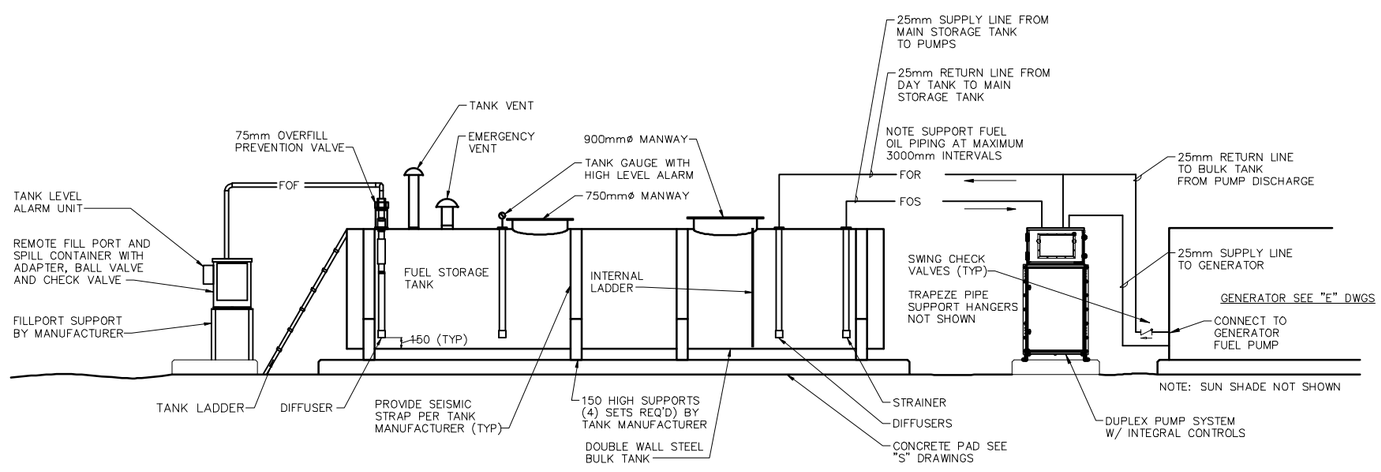

FUEL TANK SCHEMATIC VIEW
NOT TO SCALE

THESE DRAWINGS ARE "NOT APPROVED FOR CONSTRUCTION" SINCE THESE ARE BASED UPON ASSUMED CONDITIONS. THE CONTRACTOR SHALL NOT PROCEED WITH CONSTRUCTION UNTIL THE ASSUMED CONDITIONS ARE VALIDATED AND APPROVAL IS RECEIVED FROM THE CONTRACTING OFFICER.

STATE OF NEW YORK · KEVIN CHARLES LEGRAND · 079092 · LICENSED PROFESSIONAL ENGINEER

2/6/2012

UNLESS OTHERWISE NOTED, LINEAR DIMENSIONS SHOWN ARE IN METERS.

DESIGN COMPLETE SUBMITTAL

SYMB	DESCRIPTION	DATE	APR
FNL	DESIGN COMPLETE SUBMITTAL	02-06-12	KCT

DESIGNED BY: DCG
DATE: 02-06-2012
DRAWN BY: BCL
SUBMITTED BY: TETRA TECH
CHECKED BY: GPD
FILE NO.: AF1202$-SP501DT

TETRA TECH

US Army Corps of Engineers Middle East District

COMMAND & CONTROL FACILITY
KANDAHAR AIR FIELD, AFGHANISTAN
STANDARD DRAWINGS
FUEL TANK DETAIL

SHEET REFERENCE NUMBER: $
SP-501

W:\23308\127-23308-11004\CAD\MED Drawings\AF1202\Standards\Plumbing\AF1202$-SP501DT.dwg 3/7/2012 10:16:16 AM Jeffers, Scott

DUCTWORK LEGEND

SYMBOL	DESCRIPTION
500X300	DUCTWORK. FIRST FIGURE IS SIZE OF SIDE IN VIEW.
R	DUCT OFFSET RISE IN DIRECTION OF FLOW
D	DUCT OFFSET DROP IN DIRECTION OF FLOW
	FLEXIBLE CONNECTION
	CURVED ELBOW, MIN. R=1.5 WIDTH
	90° ELBOW WITH TURNING VANES
	MANUAL VOLUME DAMPER
	SUPPLY AIR DUCT IN SECTION (POSITIVE PRESSURE)
	RETURN, EXHAUST OR OUTSIDE AIR DUCT IN SECTION
	RETURN OR EXHAUST AIR REGISTER OR GRILLE
	TRANSITION; RECTANGULAR TO ROUND

SYMBOL	DESCRIPTION
	EXHAUST REGISTER
	BACKDRAFT OR BAROMETRIC DAMPER
	SUPPLY REGISTER

EQUIPMENT SYMBOLS

SYMBOL	DESCRIPTION
	INLINE EXHAUST FAN (CENTRIFUGAL TYPE)
T	TEMPERATURE CONTROLLER
D	DUCT SMOKE DETECTOR
S U	SECURE AND UNSECURE SEPARATION (SOUND ATTENUATOR, DIELECTRIC BREAK, SECURITY BARS ON OUTSIDE WALLS AND INSPECTION DOORS)
S S	SECURE AND SECURE SEPARATION (SOUND ATTENUATOR, DIELECTRIC BREAK)

PIPING LEGEND

SYMBOL	DESCRIPTION
RL	REFRIGERANT LIQUID
RS	REFRIGERANT SUCTION

ABBREVIATIONS

WWM	WELDED WIRE MESH
MPM	METERS PER MINUTE
mm	MILLIMETER
S.M.	SQUARE METERS
WG	WATER GAUGE
M^3/HR	CUBIC METERS PER HOUR
KW	KILOWATT
MIN	MINIMUM
APD	AIR PRESSURE DROP

GENERAL NOTES

1. SEE ARCHITECTURAL DRAWINGS FOR EXACT LOCATION OF LOUVERS, DIFFUSERS, REGISTERS, AND GRILLES.
2. ALL DUCT DIMENSIONS SHOWN ON THE DRAWINGS ARE CLEAR INSIDE DIMENSIONS.
3. PROVIDE SUPPORT OF MECHANICAL SYSTEMS IN ACCORDANCE WITH MANUFACTURER'S RECOMMENDATION.
4. ALL DIMENSIONS AND CAPACITIES SHOWN IN METRIC UNITS UNLESS OTHERWISE NOTED.
5. EXTERIOR ENVIRONMENTAL DESIGN CONDITIONS:
   SUMMER: 50.0°C(122°F)db; 21.7°C(71°F)wb
   WINTER: −1.7°C(29°F)
6. INTERIOR DESIGN CONDITIONS:
   OCCUPIED SPACES:
   SUMMER: 25.5°C(78°F)db
   WINTER: 20.0°C(68°F)db
   COMMUNICATIONS ROOMS:
   SUMMER: 22.2°C(72°F)db
   35%≤RH≤55%
   RESTROOMS, MECHANICAL ROOMS, AND ELECTRICAL ROOMS:
   SUMMER: 29.4°c(85°F)
   WINTER: 16.6°C(62°F)db
7. TYPICAL DETAILS ON SHEETS SM−502, SM−503 AND SM−504.
8. PROVIDE SEISMIC RESTRAINTS AS REQUIRED BY SPECIFICATION.
9. CONTROL SEQUENCES AND EQUIPMENT SCHEDULES ARE ON SHEETS SM−500, SM−501, A M−600, A M−601, C M−600 AND C M−601.

DETAIL CALLOUT

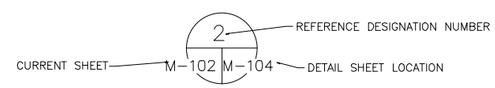

DETAIL TITLE

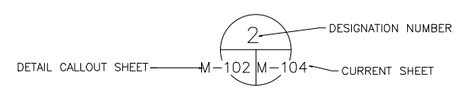

ELEVATION/SECTION CALLOUT

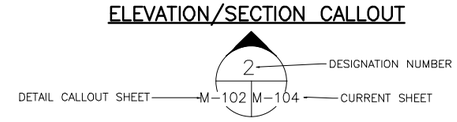

AIR REGISTER DESIGNATION

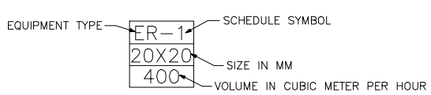

ER	EXHAUST REGISTER
RA	RETURN AIR REGISTER
SA	SUPPLY AIR REGISTER
TA	TRANSFER AIR REGISTER/GRILLE

EQUIPMENT DESIGNATION

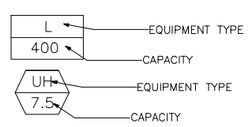

ACU	AIR CONDITIONING UNIT (CAPACITY IN KW−COOLING)
EF	EXHAUST FAN (CAPACITY IN M3/HR)
L	LOUVER (CAPACITY IN M3/HR)
UH	UNIT HEATER (CAPACITY IN KW−HEATING)
RCU	REMOTE CONDENSING UNIT (CAPACITY IN KW−COOLING)
AHU	AIR HANDLING UNIT (CAPACITY IN KW−COOLING)

KEYED NOTE SYMBOLS

1	RE−HEAT COIL SYMBOL
1	AIR REGISTER TAG
1	SOUND ATTENUATER TAG

THESE DRAWINGS ARE "NOT APPROVED FOR CONSTRUCTION" SINCE THESE ARE BASED UPON ASSUMED CONDITIONS. THE CONTRACTOR SHALL NOT PROCEED WITH CONSTRUCTION UNTIL THE ASSUMED CONDITIONS ARE VALIDATED AND APPROVAL IS RECEIVED FROM THE CONTRACTING OFFICER.

STATE OF NEW YORK · KEVIN CHARLES TERRY · 073082 · LICENSED PROFESSIONAL ENGINEER

2/6/2012

UNLESS OTHERWISE NOTED, LINEAR DIMENSIONS SHOWN ARE IN METERS.

DESIGN COMPLETE SUBMITTAL

SYMB	DESCRIPTION	DATE	APR
FNL	DESIGN COMPLETE SUBMITTAL	02−06−12	KCT

DESIGNED BY: SRZ
DATE: 02−06−2012
DRAWN BY: BNL
SUBMITTED BY: TETRA TECH
CHECKED BY: KCT
FILE NO.: AF1202$−SM001GN

TETRA TECH

US Army Corps of Engineers Middle East District

COMMAND & CONTROL FACILITY
KANDAHAR AIR FIELD, AFGHANISTAN
STANDARD DRAWINGS
MECAHNICAL GENERAL NOTES, SYMBOLS AND ABBREVIATIONS

SHEET REFERENCE NUMBER: $
SM−001

W:\23308\127−23308−11004\CAD\MED Drawings\AF1202\Standards\Mechanical\AF1202$−SM001GN.dwg 3/7/2012 10:16:40 AM Jeffers, Scott

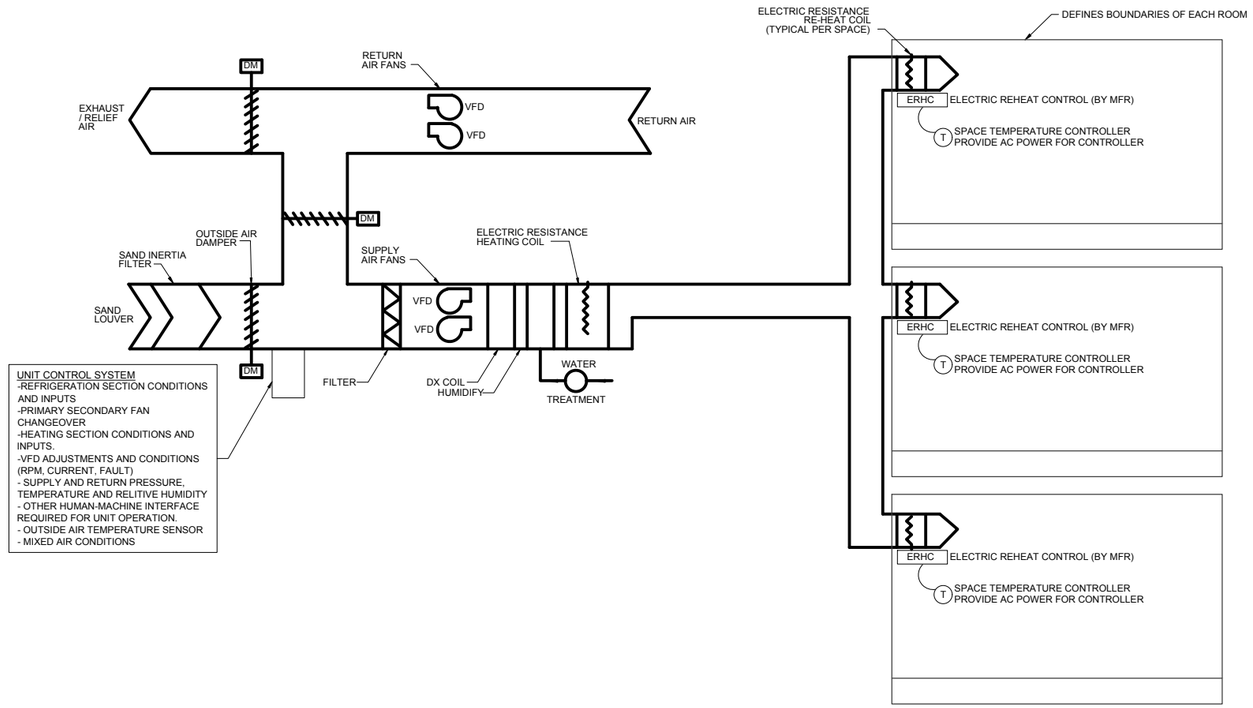

AHU CONTROL SEQUENCE

PACKAGED AIR HANDLING UNIT - ELECTRIC HEATING AND DX COOLING - SEQUENCE OF OPERATIONS

OCCUPIED MODE: STAND ALONE CONTROLS FOR EACH UNIT.

A. SUPPLY FANS SHALL RUN CONTINUOUSLY
   a. ONE FAN TO RUN AT 100% CAPACITY IN NORMAL MODE WITH OTHER FAN OFF IN STANDBY MODE. MANUAL ADJUSTMENT OF VFD.
   b. EACH FAN SEPARATELY SHALL BE CAPABLE OF PROVIDING 100% OF SUPPLY AIR REQUIREMENT ON FAILURE OF THE OTHER FAN. ON FAILURE OF ONE FAN OPERATE SINGLE FAN TO PROVIDE 100% OF SUPPLY AIR REQUIREMENT.
B. RETURN FANS SHALL RUN CONTINUOUSLY
   a. ONE FAN TO RUN AT 100% CAPACITY IN NORMAL MODE WITH OTHER FAN OFF IN STANDBY MODE. MANUAL ADJUSTMENT OF VFD.
   b. EACH FAN SEPARATELY SHALL BE CAPABLE OF PROVIDING 100% OF RETURN AIR REQUIREMENT ON FAILURE OF THE OTHER FAN. ON FAILURE OF ONE FAN OPERATE SINGLE FAN TO PROVIDE 100% OF RETURN AIR REQUIREMENT.
C. THE OUTSIDE AIR DAMPER SHALL OPEN TO MEET THE MINIMUM OUTSIDE AIR REQUIREMENT AS INDICATED ON EQUIPMENT SCHEDULE.
   a. OPERATE WITH ECONOMIZER MODE WHEN CONDITIONS ALLOW.
   b. OPERATE THE RELIEF AIR DAMPER TO MAINTAIN POSITIVE BUILDING PRESSURE REQUIREMENTS.
D. MONITOR THE OUTSIDE AIR TEMPERATURE.
   a. WHEN THE OUTSIDE AIR TEMPERATURE IS ABOVE 5°C (ADJUSTABLE) MAINTAIN A UNIT DISCHARGE AIR TEMPERATURE AT 13°C(ADJUSTABLE).
      i.a. WHEN THE OUTSIDE AIR TEMPERATURE ALLOWS OPERATE THE ECONOMIZER AND MODULATE THE OUTSIDE AIR / RETURN AIR RATIO BETWEEN MINIMUM OUTSIDE AIR AND 100% OUTSIDE AIR TO MAINTAIN A 13°C (ADJUSTABLE) DISCHARGE
      ii.b. WHEN ECONOMIZER OPERATION CANNOT MAINTAIN THE DESIRED UNIT DISCHARGE TEMPERATURE THE OUTSIDE AIR SHOULD BE AT THE MINIMUM AND THE REFRIGERATION SECTION SHOULD BE OPERATED TO MAINTAIN A 13°C (ADJUSTABLE) DISCHARGE.
   b. WHEN THE OUTSIDE AIR TEMPERATURE IS BELOW 5°C:
      i.a. WHEN THE OUTSIDE AIR TEMPERATURE IS BELOW 5°C (ADJUSTABLE) AND THE UNIT DISCHARGE CANNOT BE MAINTAINED AT 13°C (ADJUSTABLE) OPERATE THE HEATING SECTION BY VARYING THE POWER INPUT FROM 0% TO 100% TO MAINTAIN THE 13°C (ADJUSTABLE) DISCHARGE.
      ii.b. WHEN THE OUTSIDE AIR TEMPERATURE IS BELOW 0°C (ADJUSTABLE) INCREASE THE DISCHARGE AIR TEMPERATURE TO 15°C (ADJUSTABLE) AND OPERATE THE HEATING SECTION BY VARYING THE POWER INPUT FROM 0% TO 100% TO MAINTAIN THE 15°C (ADJUSTABLE) DISCHARGE.

UNOCCUPIED MODE

A. SUPPLY FANS AND RETURN FANS SHALL BE OFF.
B. ALL OUTSIDE AIR INTAKE AND RELIEF AIR DAMPERS SHALL BE CLOSED.
C. ELECTRIC HEATING SECTIONS AND TERMINAL HEATING UNITS SHALL BE OFF.
D. COOLING SECTION SHALL BE OFF.
E. SPACE TEMPERATURES SHALL BE MONITORED AT ALL TIMES.
F. IF THE SPACE TEMPERATURE DROPS BELOW THE LOW TEMPERATURE LIMIT OF 10C THEN START THE UNIT AND OPERATE IN THE OCCUPIED MODE UNTIL THE SPACE TEMPERATURES ARE ALL ABOVE THE LOW TEMPERATURE LIMIT.
   a. EXCEPTION: OUTSIDE AIR DAMPERS ARE CLOSED, RELIEF AIR DAMPERS ARE CLOSED.
G. IF ANY ONE SPACE TEMPERATURE GOES ABOVE THE HIGH LIMIT OF 30C THEN OPERATE THE UNIT IN THE OCCUPIED MODE UNTIL THE TEMPERATURE GOES BELOW THE HIGH LIMIT.
   a. EXCEPTION: OUTSIDE AIR DAMPERS ARE CLOSED, RELIEF AIR DAMPERS ARE CLOSED.

GENERAL:

A. UNIT CONTROL SYSTEM BY AIR HANDLER MANUFACTURER INCLUDING ALL SENSORS, INDICATORS, HUMAN-MACHINE INTERFACE.
B. EACH ROOM TO HAVE SEPARATE CONTROLLER.
C. EACH FAN TO HAVE SEPARATE VFD W/ MANUAL ADJUSTMENT AND PRESSURE GAUGE ON UNIT CONTROL PANEL.
D. ANALOG SIGNAL BETWEEN SPACE TEMPERATURE CONTROLLER AND ERHC

1 0 1 2 3 4 5 6 7 8 9
1:100

THESE DRAWINGS ARE "NOT APPROVED FOR CONSTRUCTION" SINCE THESE ARE BASED UPON ASSUMED CONDITIONS. THE CONTRACTOR SHALL NOT PROCEED WITH CONSTRUCTION UNTIL THE ASSUMED CONDITIONS ARE VALIDATED AND APPROVAL IS RECEIVED FROM THE CONTRACTING OFFICER.

STATE OF NEW YORK
KEVIN CHARLES TERRY
073092
LICENSED PROFESSIONAL ENGINEER
2/6/2012

UNLESS OTHERWISE NOTED, LINEAR DIMENSIONS SHOWN ARE IN METERS.

DESIGN COMPLETE SUBMITTAL

SYMB	DESCRIPTION	DATE	APR
FNL	DESIGN COMPLETE SUBMITTAL	02-06-12	KCT

DESIGNED BY: SRZ
DRAWN BY: BNL
CHECKED BY: KCT
DATE: 02-06-2012
SUBMITTED BY: TETRA TECH
FILE NO.: AF1202$-SM500DT

TETRA TECH

US Army Corps of Engineers
Middle East District

COMMAND & CONTROL FACILITY
KANDAHAR AIR FIELD, AFGHANISTAN
STANDARD DRAWINGS
MECHANICAL DETAILS

SHEET REFERENCE NUMBER:
$
SM-500

W:\23308\127-23308-11004\CAD\MED Drawings\AF1202\Standards\Mechanical\AF1202$-SM500DT.dwg 3/7/2012 10:17:03 AM Jeffers, Scott

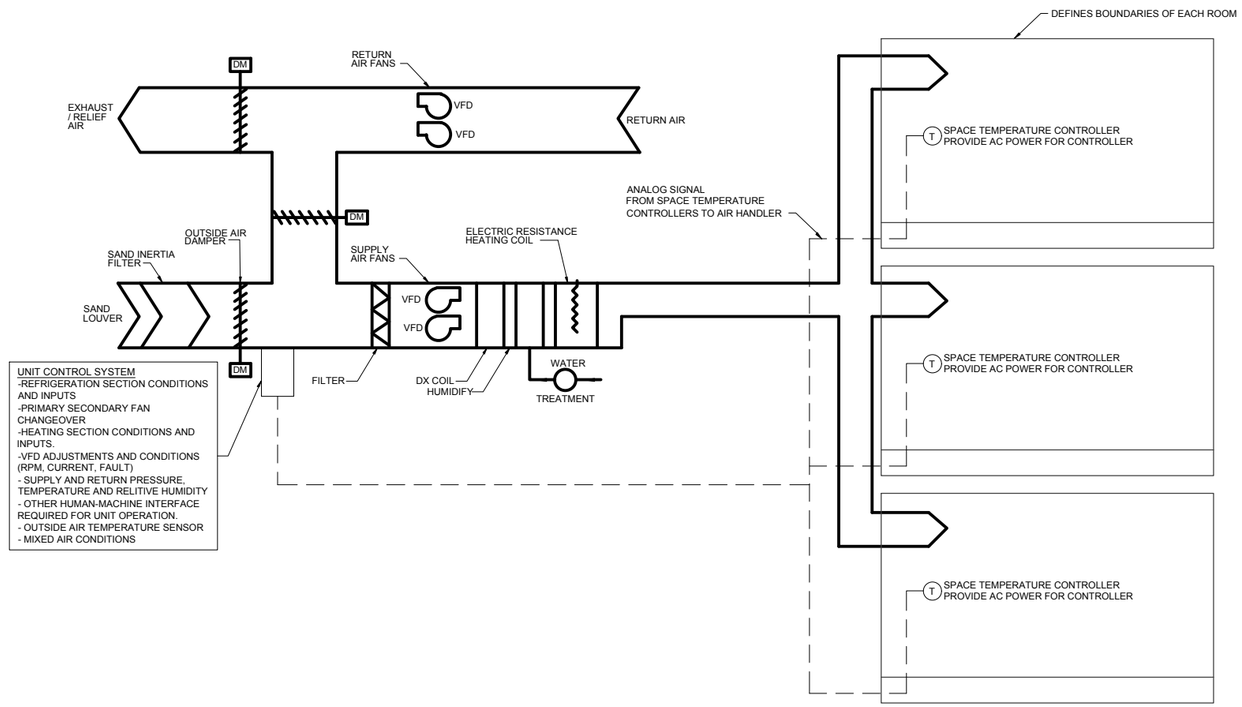

AHU CONTROL SEQUENCE: JOC & SERVER

PACKAGED AIR HANDLING UNIT - ELECTRIC HEATING AND DX COOLING - SEQUENCE OF OPERATIONS

OCCUPIED MODE: STAND ALONE CONTROLS FOR EACH UNIT.

A. SUPPLY FANS SHALL RUN CONTINUOUSLY
   a. ONE FAN TO RUN AT 100% CAPACITY IN NORMAL MODE WITH OTHER FAN OFF IN STANDBY MODE. MANUAL ADJUSTMENT OF VFD.
   b. EACH FAN SEPARATELY SHALL BE CAPABLE OF PROVIDING 100% OF SUPPLY AIR REQUIREMENT ON FAILURE OF THE OTHER FAN. ON FAILURE OF ONE FAN OPERATE SECONDARY FAN TO PROVIDE 100% OF SUPPLY AIR REQUIREMENT.
B. RETURN FANS SHALL RUN CONTINUOUSLY
   a. ONE FAN TO RUN AT 100% CAPACITY IN NORMAL MODE WITH OTHER FAN OFF IN STANDBY MODE. MANUAL ADJUSTMENT OF VFD.
   b. EACH FAN SEPARATELY SHALL BE CAPABLE OF PROVIDING 100% OF RETURN AIR REQUIREMENT ON FAILURE OF THE OTHER FAN. ON FAILURE OF ONE FAN OPERATE SECONDARY FAN TO PROVIDE 100% OF RETURN AIR REQUIREMENT.
C. THE OUTSIDE AIR DAMPER SHALL OPEN TO MEET THE MINIMUM OUTSIDE AIR REQUIREMENT AS INDICATED ON EQUIPMENT SCHEDULE.
   a. OPERATE WITH ECONOMIZER MODE WHEN CONDITIONS ALLOW.
   b. OPERATE THE RELIEF AIR DAMPER TO MAINTAIN POSITIVE BUILDING PRESSURE REQUIREMENTS.
D. MONITOR THE SPACE TEMPERATURE IN ALL SPACES AND AVERAGE THE OUTPUT OF ALL CONTROLLERS.
   a. WHEN ONE OR MORE SPACES REQUIRES COOLING:
      i.a. OPERATE THE COOLING SO THAT THE DISCHARGE AIR TEMPERATURE SATISFIES THE AVERAGE COOLING REQUIREMENT.
   b. WHEN THE MIXED AIR TEMPERATURE MEETS THE REQUIREMENTS OF ALL SPACES;
      i.a. PROVIDE NO MECHANICAL COOLING.
      ii.b. PROVIDE NO ELECTRIC HEATING.
   c. WHEN NO SPACES REQUIRE COOLING:
      i.a. OPERATE THE ELECTRIC HEATING SECTION OF THE UNIT TO MAINTAIN THE AVERAGE REQUIREMENTS OF THE SPACE TEMPERATURE CONTROLLER.

UNOCCUPIED MODE

A. SUPPLY FANS AND RETURN FANS SHALL BE OFF.
B. ALL OUTSIDE AIR INTAKE AND RELIEF AIR DAMPERS SHALL BE CLOSED.
C. ELECTRIC HEATING SECTIONS SHALL BE OFF.
D. COOLING SECTION SHALL BE OFF.
E. SPACE TEMPERATURES SHALL BE MONITORED AT ALL TIMES.
F. IF THE SPACE TEMPERATURE DROPS BELOW THE LOW TEMPERATURE LIMIT OF 10C THEN START THE UNIT AND OPERATE IN THE OCCUPIED MODE UNTIL THE SPACE TEMPERATURES ARE ALL ABOVE THE LOW TEMPERATURE LIMIT.
   a. EXCEPTION: OUTSIDE AIR DAMPERS ARE CLOSED, RELIEF AIR DAMPERS ARE CLOSED.
G. IF ANY ONE SPACE TEMPERATURE GOES ABOVE THE HIGH LIMIT OF 30C THEN OPERATE THE UNIT IN THE OCCUPIED MODE UNTIL THE TEMPERATURE GOES BELOW THE HIGH LIMIT.
   a. EXCEPTION: OUTSIDE AIR DAMPERS ARE CLOSED, RELIEF AIR DAMPERS ARE CLOSED.

GENERAL:

A. UNIT CONTROL SYSTEM BY AIR HANDLER MANUFACTURER INCLUDING ALL SENSORS, INDICATORS, HUMAN-MACHINE INTERFACE.
B. EACH ROOM TO HAVE SEPARATE CONTROLLER.
C. EACH FAN TO HAVE SEPARATE VFD W/ MANUAL ADJUSTMENT AND PRESSURE GAUGE ON UNIT CONTROL PANEL.
D. ANALOG SIGNAL BETWEEN ROOM CONTROLLER AND UNIT CONTROLLER - ROOM TEMP BACK TO UNIT.

1 0 1 2 3 4 5 6 7 8 9
1:100

THESE DRAWINGS ARE "NOT APPROVED FOR CONSTRUCTION" SINCE THESE ARE BASED UPON ASSUMED CONDITIONS. THE CONTRACTOR SHALL NOT PROCEED WITH CONSTRUCTION UNTIL THE ASSUMED CONDITIONS ARE VALIDATED AND APPROVAL IS RECEIVED FROM THE CONTRACTING OFFICER.

STATE OF NEW YORK
KEVIN CHARLES TERRY
073082
LICENSED PROFESSIONAL ENGINEER
2/6/2012

UNLESS OTHERWISE NOTED, LINEAR DIMENSIONS SHOWN ARE IN METERS.

DESIGN COMPLETE SUBMITTAL

SYMB	DESCRIPTION	DATE	APR
FNL	DESIGN COMPLETE SUBMITTAL	02-06-12	KCT

DESIGNED BY: SRZ
DATE: 02-06-2012
DRAWN BY: BNL
SUBMITTED BY: TETRA TECH
CHECKED BY: KCT
FILE NO.: AF1202$-SM501DT

TETRA TECH

US Army Corps of Engineers
Middle East District

COMMAND & CONTROL FACILITY
KANDAHAR AIR FIELD, AFGHANISTAN
STANDARD DRAWINGS
MECHANICAL DETAILS

SHEET REFERENCE NUMBER:
$
SM-501

W:\23308\127-23308-11004\CAD\MED Drawings\AF1202\Standards\Mechanical\AF1202$-SM501DT.dwg 3/7/2012 10:17:27 AM Jeffers, Scott

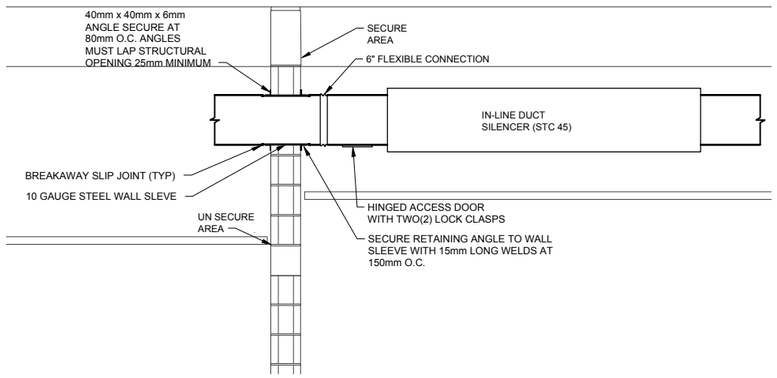

INTERIOR UN-SECURE TO SECURE DUCT WALL PENETRATION DETAIL (1 / VARIOUS | SM-502)

SCALE 1:20

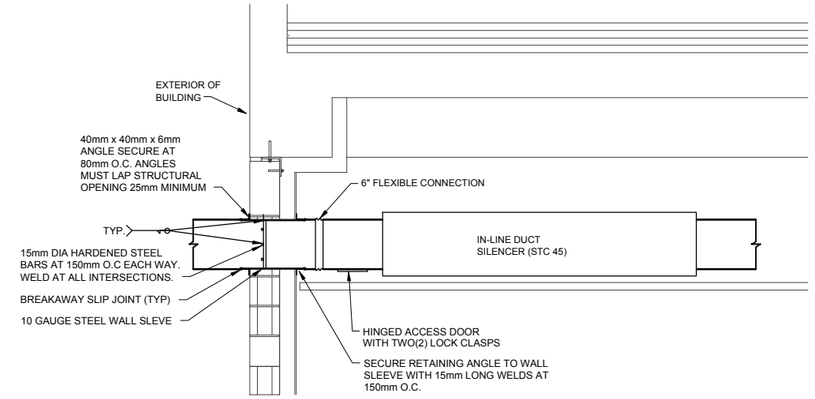

EXTERIOR DUCT WALL PENETRATION DETAIL (3 / VARIOUS | SM-502)

SCALE 1:20

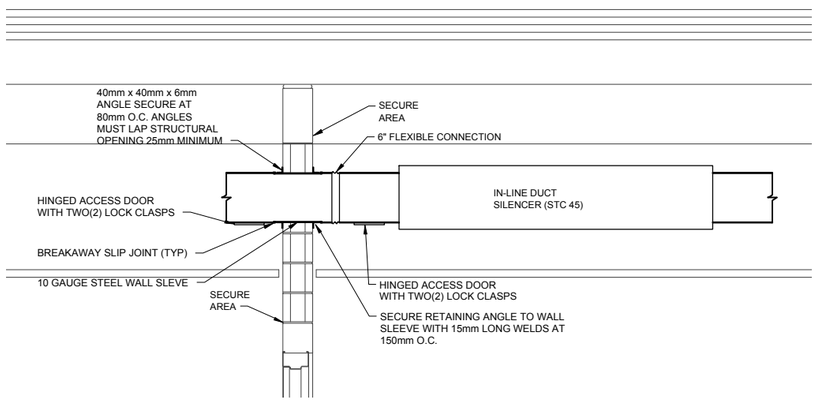

INTERIOR SECURE TO SECURE DUCT WALL PENETRATION DETAIL (2 / VARIOUS | SM-502)

SCALE 1:20

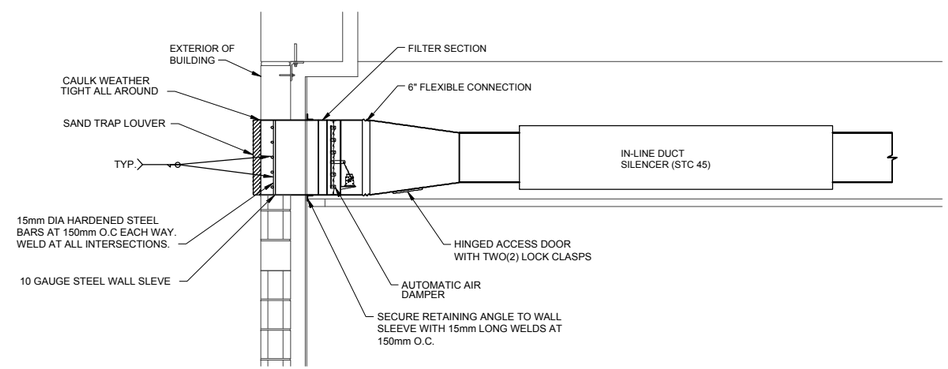

EXTERIOR DUCT WALL PENETRATION DETAIL WITH SAND TRAP LOUVER (4 / VARIOUS | SM-502)

SCALE 1:20

1 .50 0 1

1:20

THESE DRAWINGS ARE "NOT APPROVED FOR CONSTRUCTION" SINCE THESE ARE BASED UPON ASSUMED CONDITIONS. THE CONTRACTOR SHALL NOT PROCEED WITH CONSTRUCTION UNTIL THE ASSUMED CONDITIONS ARE VALIDATED AND APPROVAL IS RECEIVED FROM THE CONTRACTING OFFICER.

STATE OF NEW YORK · KEVIN CHARLES TERRY · 075083 · LICENSED PROFESSIONAL ENGINEER

2/6/2012

UNLESS OTHERWISE NOTED, LINEAR DIMENSIONS SHOWN ARE IN METERS.

DESIGN COMPLETE SUBMITTAL

FNL	DESIGN COMPLETE SUBMITTAL	02-06-12	KCT
SYMB	DESCRIPTION	DATE	APR

DESIGNED BY: SRZ
DATE: 02-06-2012
DRAWN BY: BNL
SUBMITTED BY: TETRA TECH
CHECKED BY: KCT
FILE NO.: AF1202$-SM502DT

TETRA TECH

US Army Corps of Engineers
Middle East District

COMMAND & CONTROL FACILITY
KANDAHAR AIR FIELD, AFGHANISTAN
STANDARD DRAWINGS
MECHANICAL DETAILS

SHEET REFERENCE NUMBER:
$
SM-502

W:\23308\127-23308-11004\CAD\MED Drawings\AF1202\Standards\Mechanical\AF1202$-SM502DT.dwg 3/7/2012 10:17:52 AM Jeffers, Scott

NOTE
1. "X" MUST BE 38mm PLUS CASING STATIC PRESSURE;MINIMUM 51mm.

2. "Y" MUST BE 38mm PLUS CASING STATIC PRESSURE;MINIMUM 51mm.

EXAMPLE: CASING At (-25mm) Wg.
X = 38mm + (-25mm) = 13mm; USE 51 mm MIN.
Y = 38mm - (-25mm) = 51mm.

MIN. CONDENSATE PIPING

CAPACITY	PIPE DIA.
0-3 TON	19
3-10 TON	25
10-100 TON	32
OVER 100	38

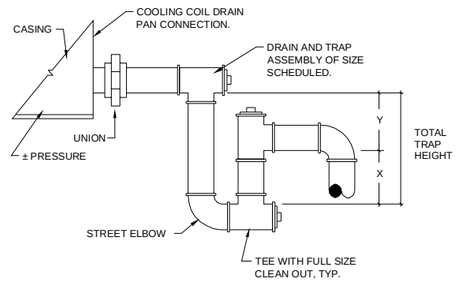

(+ OR – PRESSURE)
AHU CONDENSATE TRAP DETAIL 5
N.T.S. VARIOUS | M503

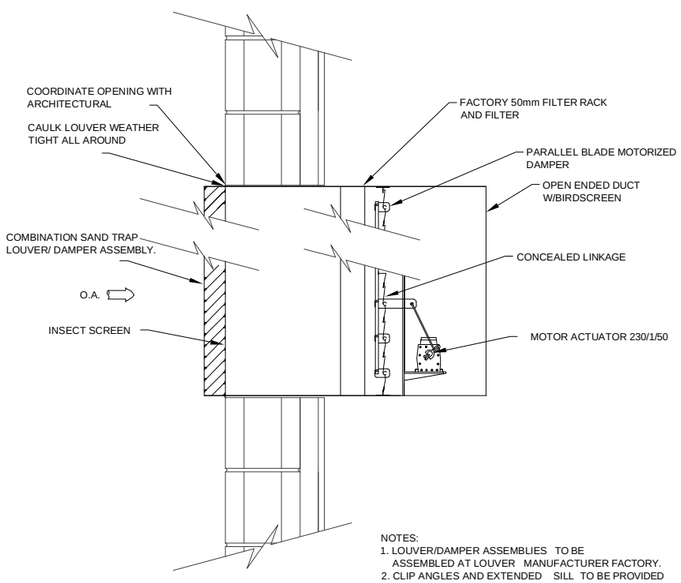

NOTES:
1. LOUVER/DAMPER ASSEMBLIES TO BE ASSEMBLED AT LOUVER MANUFACTURER FACTORY.
2. CLIP ANGLES AND EXTENDED SILL TO BE PROVIDED BY LOUVER MANUFACTURER.
3. MOTOR ACTUATORS TO BE SIZED AND INSTALLED BY LOUVER MANUFACTURER.
4. INSTALLATION OF LOUVER TO BE IN ACCORDANCE WITH LOUVER MANUFACTURER'S RECOMMENDATIONS.

SAND TRAP LOUVER/DAMPER AIR DETAIL 6
N.T.S. VARIOUS | M503

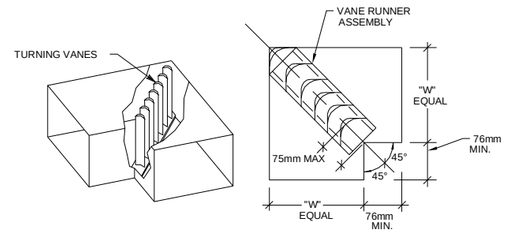

TYPICAL ELBOW DETAIL 7
N.T.S. VARIOUS | M503

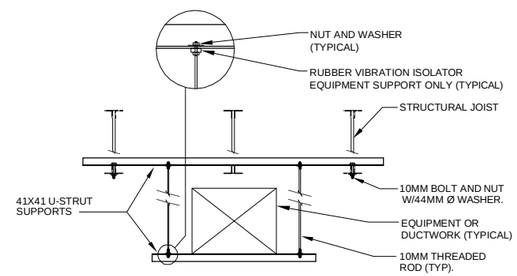

TRAPEZE EQUIPMENT OR DUCT HANGER DETAIL – JOIST INSTALLATION 8
N.T.S. VARIOUS | M503

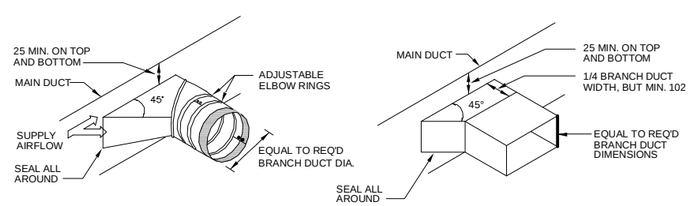

TYPICAL BRANCH TAKE-OFF FITTING 9
N.T.S. VARIOUS | M503

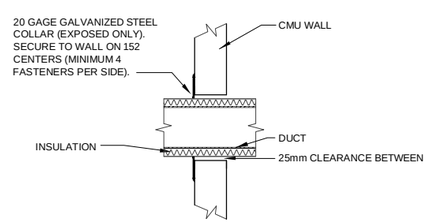

DUCT PENETRATION THROUGH INTERIOR WALL (NOT APPLICABLE TO FIRE-RATED WALLS) 10
N.T.S. VARIOUS | M503

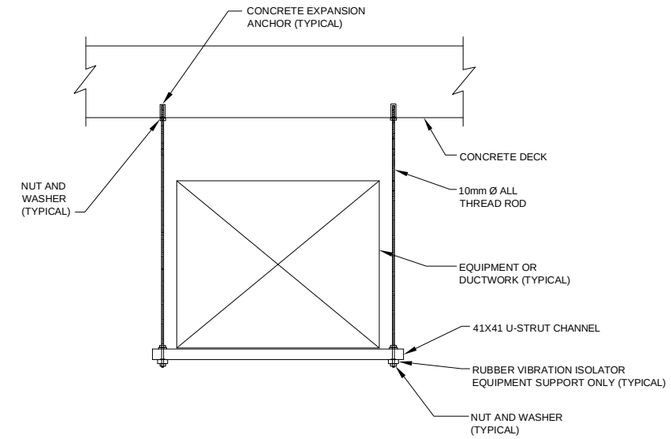

TRAPEZE EQUIPMENT OR DUCT HANGER DETAIL – CONCRETE INSTALLATION 11
N.T.S. VARIOUS | M503

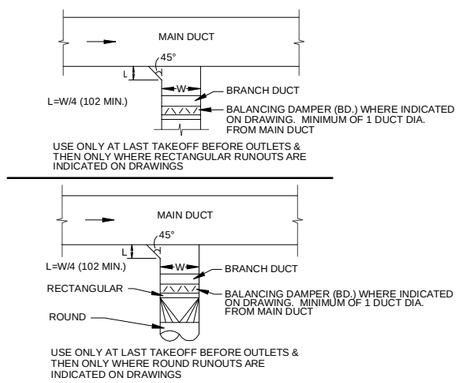

TYPICAL BRANCH CONNECTION 12
N.T.S. VARIOUS | M503

1 .50 0 1
1:20

THESE DRAWINGS ARE "NOT APPROVED FOR CONSTRUCTION" SINCE THESE ARE BASED UPON ASSUMED CONDITIONS. THE CONTRACTOR SHALL NOT PROCEED WITH CONSTRUCTION UNTIL THE ASSUMED CONDITIONS ARE VALIDATED AND APPROVAL IS RECEIVED FROM THE CONTRACTING OFFICER.

STATE OF NEW YORK · KEVIN CHARLES TIERNEY · 072063 · LICENSED PROFESSIONAL ENGINEER
2/6/2012

UNLESS OTHERWISE NOTED, LINEAR DIMENSIONS SHOWN ARE IN METERS.

DESIGN COMPLETE SUBMITTAL

SYMB	DESCRIPTION	DATE	APR
FNL	DESIGN COMPLETE SUBMITTAL	02-06-12	KCT

DESIGNED BY: SRZ
DATE: 02-06-2012
DRAWN BY: BNL
SUBMITTED BY: TETRA TECH
CHECKED BY: KCT
FILE NO.: AF12023-SM503DT

TETRA TECH

US Army Corps of Engineers
Middle East District

COMMAND & CONTROL FACILITY
KANDAHAR AIR FIELD, AFGHANISTAN
STANDARD DRAWINGS
MECHANICAL DETAILS

SHEET REFERENCE NUMBER:
$
SM-503

W:\23308\127-23308-11004\CAD\MED Drawings\AF1202\Standards\Mechanical\AF12023-SM503DT.dwg 3/8/2012 11:56:08 AM Jeffers, Scott

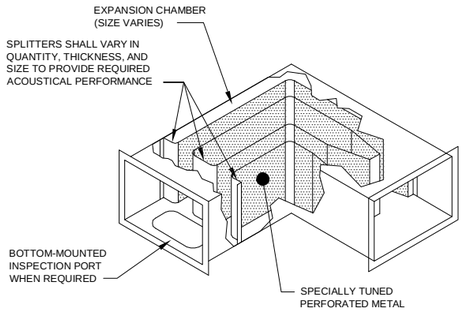

TYPICAL PRE-FABRICATED DUCT SOUND ATTENUATOR DETAIL

N.T.S. — 13 VARIOUS | M504

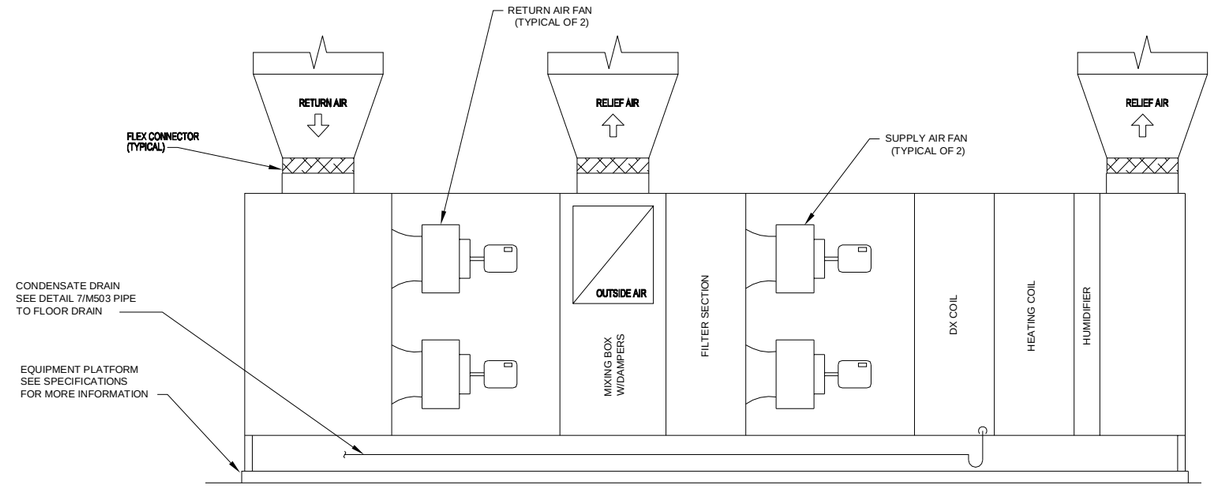

TYPICAL AHU CONFIGURATION

N.T.S. — 18 VARIOUS | M504

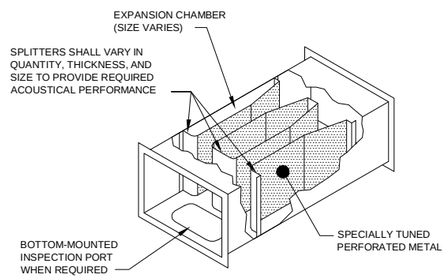

TYPICAL PRE-FABRICATED STRAIGHT DUCT SOUND ATTENUATOR DETAIL

N.T.S. — 14 VARIOUS | M504

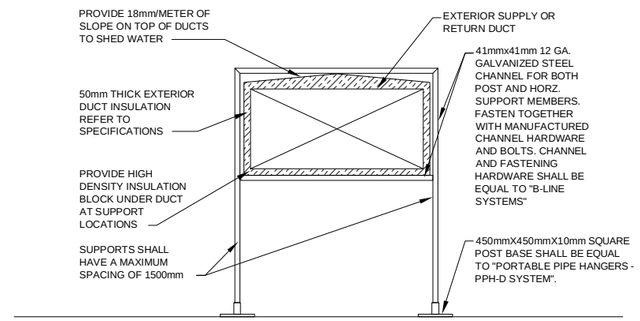

EXTERIOR DUCT SUPPORT DETAILL

N.T.S. — 16 VARIOUS | M504

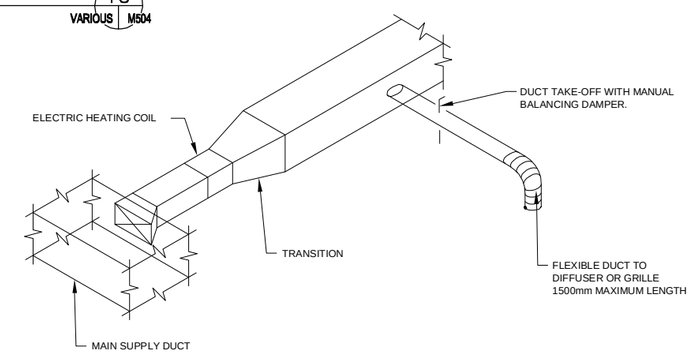

NOTE:

1. CONNECTION TO DIFFUSER, ETC. SHALL BE DIRECT RUN WITH LEAST BENDS. TAKE-OFF MAY BE FROM TOP SIDE OR BOTTOM OF BRANCH DUCT.
2. PROVIDE ADEQUATE MAINTENANCE ACCESS TO ALL ELECTRIC REHEAT COILS. ACCESS DOORS SHALL BE PROVIDED IN CEILING CONSTRUCTION WHERE NECESSARY.

ELECTRIC COIL INSTALLATION

N.T.S. — 19 VARIOUS | M504

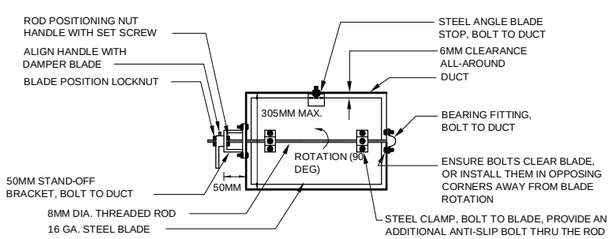

NOTES:
1. DAMPERS FOR ROUND DUCTS SHALL BE SIMILAR TO THE DAMPER SHOWN ABOVE.
2. ENSURE THAT FULL 90° DAMPER BLADE MOVEMENT IS UNOBSTRUCTED.
3. FOR DUCT HEIGHTS MORE THAN 300MM, PROVIDE FACTORY-FABRICATED OPPOSED BLADE DAMPERS

MANUAL DAMPER (ADJUSTABLE SINGLE BLADE BALANCING TYPE)

N.T.S. — 15 VARIOUS | M504

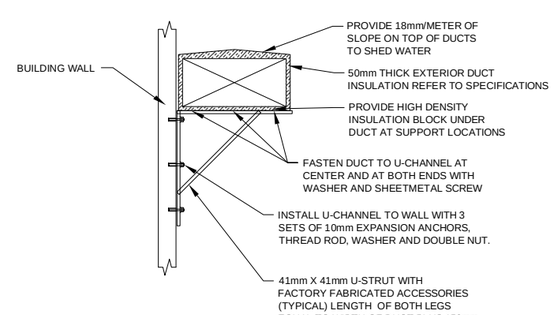

HORIZONTAL DUCT WALL HANGER DETAIL

N.T.S. — 17 VARIOUS | M504

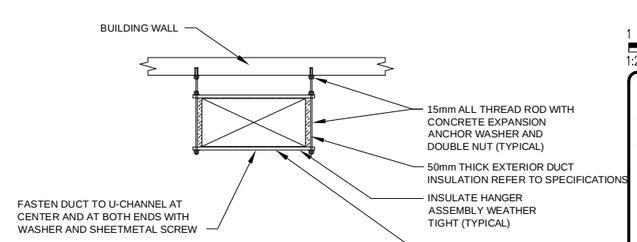

VERTICAL DUCT WALL HANGER DETAIL

N.T.S. — 20 VARIOUS | M504

1 .50 0 1
1:20

THESE DRAWINGS ARE "NOT APPROVED FOR CONSTRUCTION" SINCE THESE ARE BASED UPON ASSUMED CONDITIONS. THE CONTRACTOR SHALL NOT PROCEED WITH CONSTRUCTION UNTIL THE ASSUMED CONDITIONS ARE VALIDATED AND APPROVAL IS RECEIVED FROM THE CONTRACTING OFFICER.

STATE OF NEW YORK · KEVIN CHARLES TIGHE · 072902 · LICENSED PROFESSIONAL ENGINEER
2/6/2012

UNLESS OTHERWISE NOTED, LINEAR DIMENSIONS SHOWN ARE IN METERS.

DESIGN COMPLETE SUBMITTAL

SYMB	DESCRIPTION	DATE	APR
FNL	DESIGN COMPLETE SUBMITTAL	02-06-12	KCT

DESIGNED BY: SRZ
DATE: 02-06-2012
DRAWN BY: BNL
SUBMITTED BY: TETRA TECH
CHECKED BY: KCT
FILE NO.: AF12023-SM504DT

TETRA TECH

US Army Corps of Engineers
Middle East District

COMMAND & CONTROL FACILITY
KANDAHAR AIR FIELD, AFGHANISTAN
STANDARD DRAWINGS
MECHANICAL DETAILS

SHEET REFERENCE NUMBER:
$
SM-504

W:\23308\127-23308-11004\CAD\MED Drawings\AF1202\Standards\Mechanical\AF1202$-SM504DT.dwg 3/8/2012 11:55:31 AM Jeffers, Scott

PLAN LEGEND (LIGHTING)

FOR LIGHT FIXTURE SYMBOLS
REFER TO LIGHT FIXTURE SCHEDULE
ON DRAWING SE-600

NOTE:
ALL LIGHT SWITCHES SHALL BE RATED 20 AMPERES UNLESS OTHERWISE NOTED.

$	SWITCH
$3	3-WAY SWITCH
$4	4-WAY SWITCH
$OS	WALL-MOUNTED OCCUPANCY SENSOR SWITCH
$F	EXHAUST FAN SWITCH
OS	CEILING-MOUNTED OCCUPANCY SENSOR
LP1-2	HOMERUN TO PANELBOARD. SYMBOL SHOWN INDICATES CIRCUIT NO. 2 PANEL LP1. REFER TO PANELBOARD SCHEDULE FOR FURTHER INFORMATION.

PLAN LEGEND (POWER)

	PANELBOARD
XXX-## / ##	MOTOR XXXX-## = PANEL AND CIRCUIT NUMBER. ## = MOTOR NUMBER IN MOTOR CONNECTION SCHEDULE.
CX##	CIPHER LOCK CONNECTION SYMBOL – SEE CIPHER LOCK CONNECTION SCHEDULE X INDICATES BUILDING DESIGNATION, ## INDICATES CONNECTION SCHEDULE NUMBER
GFI	20A, 120V, 60 Hz DUPLEX RECEPTACLE GFI SUBSCRIPT INDICATES GROUND FAULT INTERRUPTER. LABEL RECEPTACLE WITH VOLTAGE, FREQUENCY & BRANCH CIRCUIT CONNECTED.
TV	20A, 120V, 60 Hz DUPLEX RECEPTACLE FOR TV. MOUNT 2130 mm (TO CENTER) AFF.
T#	TRANSFORMER – # DENOTES DESIGNATION
J	DISCONNECT SWITCH
	EQUIPMENT CONNECTION – TYPE AS INDICATED.
FB	FLOOR BOX *SEE GENERAL NOTE 9
CPSX-# / T	CIPHER LOCK POWER SUPPLY; X INDICATES BUILDING DESIGNATION, ## INDICATES POWER SUPPLY NUMBER

PLAN LEGEND (SITE)

—UE—	EXISTING UNDERGROUND ELECTRIC
—C—	UNDERGROUND COMMUNICATIONS
—E—	UNDERGROUND ELECTRIC
PB	PULL BOX
MH	MANHOLE
T	PAD MOUNT TRANSFORMER

PLAN LEGEND – (LIGHTNING PROTECTION AND GROUNDING)

—R—	ROOF CONDUCTOR
—D—	MAIN DOWN CONDUCTOR
—G—	EARTH ELECTRODE SUBSYSTEM CONDUCTOR (DIRECT BURIED GROUND COUNTERPOISE CONDUCTOR)
A	AIR TERMINAL
	DRIVEN GROUND ROD
	DRIVEN GROUND ROD WITH TEST WELL
	NON-REVERSIBLE BOND CONNECTION

ONE-LINE AND CONTROL SCHEMATIC LEGEND

GEN	GENERATOR
##A	CIRCUIT BREAKER (## INDICATES AMPERAGE RATING)
ATS	AUTOMATIC TRANSFER SWITCH
	GROUND
Δ/Y	TRANSFORMER
PP2 150A 208/120V 3ϕ, 4W 10K AIC	PANELBOARD
	HIGH VOLTAGE FUSE
	MOTOR
TVSS	TRANSIENT VOLTAGE SURGE SUPPRESSOR
M DM	DIGITAL METER
A	FEEDER SIZE (REFER TO TABLE)

ABBREVIATIONS

A	AMPERE
AC	ABOVE COUNTER
ACCU	AIR COOLED CONDENSING UNIT
AFF	ABOVE FINISHED FLOOR
AFG	ABOVE FINISHED GRADE
AHU	AIR HANDLING UNIT
AIC	AMPERE INTERRUPTING CAPACITY
BFG	BELOW FINISHED GRADE
BLDG	BUILDING
C	CONDUIT
CATV	CABLE TELEVISION
CB	CIRCUIT BREAKER
CC	COMMUNICATIONS CABINET
CE	CONCRETE ENCASED
CKT	CIRCUIT
CND	CONDUCTOR
COR	CONTRACTING OFFICERS REPRESENTATIVE
CU	COPPER
DM	DIGITAL METER
ECP	ENTRY CONTROL POINT
EDC	ELECTRIC DUCT HEATER
EF	EXHAUST FAN
EP	EXPLOSION PROOF
EPO	EMERGENCY POWER OFF
ESS	ELECTRONIC SECURITY SYSTEM
EWC	ELECTRIC WATER COOLER
EWH	ELECTRIC WATER HEATER
FACP	FIRE ALARM CONTROL PANEL
FB	FLOOR BOX
FO	FIBER OPTIC
FPP	FIRE PUMP PANEL
GES	GROUNDING ELECTRODE SYSTEM
GFE	GOVERNMENT FURNISHED CONTRACTOR INSTALLED
GFI	GROUND FAULT INTERRUPTING
GFP	GROUND FAULT PROTECTION
GND	GROUND
GR	GROUND ROD
GRS	GALVANIZED RIGID STEEL CONDUIT
HH	HANDHOLE
HP	HORSEPOWER
HPS	HIGH PRESSURE SODIUM
HZ	HERTZ
IDS	INTRUSION DETECTION SYSTEM
KV	KILOVOLT
KVA	KILOVOLT-AMPERE
KW	KILOWATT
M	METERS
MH	MANHOLE
MM	MULTIMODE
mm	MILLIMETER
MSB	MAIN SWITCHBOARD
MTD	MOUNTED
N	NEUTRAL
NL	NIGHT LIGHT
OSP	OUTSIDE PLANT
P	POLE
PH, ϕ	PHASE
PVC	POLYVINYL CHLORIDE
RM	ROOM
SE	SERVICE ENTRANCE
SM	SINGLEMODE
SN	SOLID NEUTRAL
ST	SHUNT TRIP
TBB	TELEPHONE BACKBOARD
TTC	TELEPHONE TERMINAL CABINET
TYP.	TYPICAL
UNO	UNLESS NOTED OTHERWISE
V	VOLT
W	WIRE
WP	WEATHERPROOF
W/	WITH
W/O	WITHOUT
XFMR, T	TRANSFORMER

DETAIL CALLOUT

CURRENT SHEET — 2 — REFERENCE DESIGNATION NUMBER
E-110 | E-500 — DETAIL SHEET LOCATION

DETAIL TITLE ON THE DETAIL SHEET

DETAL CALLOUT SHEET — 2 — DESIGNATION NUMBER
E-110 | E-500 — CURRENT SHEET

ELEVATION/SECTION CALLOUT

CURRENT SHEET — 2 — DESIGNATION NUMBER
E-110 | E-300 — ELEVATION/SECTION LOCATION

ALLOWABLE AMPACITIES OF CONDUCTORS		
NOT MORE THAN 3 CURRENT-CARRYING CONDUCTORS IN RACEWAY/CABLE/EARTH (30°C)		
SIZE AWG (CU)	SIZE mm²	AMPACITY
12	4	20*
10	6	30*
8	10	40*
6	16	55*
4	25	70*
3	35	85*
2	35	89**
1	50	108**
1/0	70	136**
2/0	70	136**
3/0	95	164**
4/0	120	188**
250	150	216**
300	150	216**
350	185	246**
400	240	286**
500	300	328**
600	300	328**

*BASED ON NEC TABLE 310.5 (B)(16)
**BASED ON IEC 60364-5-52 TABLE A.52-4

MINIMUM INSIDE DIAMETER EQUIVALENT CONDUIT SIZE	
METRIC DESIGNATOR	INCH
20	3/4
25	1
32	1 1/4
38	1 1/2
50	2
64	2 1/2
75	3
90	3 1/2
100	4

UNLESS NOTED ELSEWHERE ON THE CONTRACT DOCUMENTS, THE FOLLOWING LIST REPRESENTS THE TYPICAL MOUNTING HEIGHTS FOR THE DEVICES SHOWN:

a. SWITCHES	1,220 mm (TO TOP)
b. RECEPTACLES	500 mm (TO BOTTOM)
c. POWER PANELS	1,830 mm (TO TOP)
d. DISCONNECT SWITCHES	1,520 mm (TO TOP)
e. MOTOR STARTERS	1,520 mm (TO TOP)
f. EXIT SIGNS	2,380 mm (TO CENTER)
g. CHAIN-HUNG FIXTURES	3,350 mm (TO BOTTOM OF LIGHT)

GENERAL NOTES:

1. ALL FEEDER AND BRANCH CIRCUITS SHALL CONTAIN AN EQUIPMENT GROUNDING CONDUCTOR SIZED PER N.E.C.
2. ALL SERVICE ENTRANCE CONDUITS/DUCTS WITH CABLES SHALL BE SEALED AT BOTH ENDS WITH APPROPRIATE SEALER. EMPTY CONDUITS SHALL BE CLEANED AND CAPPED. PROVIDE 6.35mm NYLON PULL ROPE IN ALL SPARE CONDUITS.
3. ALL PANELBOARD DIRECTORIES SHALL BE TYPEWRITTEN AND COMPLETE IN ENGLISH.
4. ALL CONDUIT PENETRATIONS THRU 1 HOUR FIRE RATED WALLS SHALL BE SEALED/FIRESTOPPED.
5. FOR ELECTRICAL INSTALLATION SEISMIC REQUIREMENTS, SEE SPECIFICATION SEISMIC PROTECTION FOR ELECTRICAL EQUIPMENT, SECTIONS 26 05 48. 0010.
6. FOR ABOVE GRADE FLOOR/WALL PENETRATION DETAILS REFER TO APPROPRIATE DETAILS.
7. ALL RACEWAYS CONTAINING CONDUCTORS 25mm² OR LARGER SHALL HAVE AN INSULATED BUSHING INSTALLED ON EACH END WHERE ENTERING A CABINET, BOX OR ENCLOSURE, PER NEC 300.4(G) AND 312.16(C).
8. ALL ABOVE GRADE RACEWAYS SHALL BE SURFACE MOUNTED.
9. FLOOR BOXES IN SOF JOC 114 CONTAIN 2 DATA OUTLETS AND 2 QUAD RECEPTACLES.

   FLOOR BOXES FOR PRINTERS AND FAXES CONTAIN 2 DATA OUTLETS AND 2 QUAD RECEPTACLES.

   FLOOR BOXES INDICATED IN ALL OTHER LOCATIONS CONTAIN 4 DATA OUTLETS AND 2 QUAD RECEPTACLES. PROVIDE AN ADDITIONAL FB NEXT TO ONE SHOWN POPULATED WITH 2 ADDITIONAL QUAD RECEPTACLES.
10. NOT USED
11. COORDINATE EXACT LOCATION OF TV RECEPTACLES WITH CONTRACTING OFFICER PRIOR TO ROUGH-IN.

THESE DRAWINGS ARE "NOT APPROVED FOR CONSTRUCTION" SINCE THESE ARE BASED UPON ASSUMED CONDITIONS. THE CONTRACTOR SHALL NOT PROCEED WITH CONSTRUCTION UNTIL THE ASSUMED CONDITIONS ARE VALIDATED AND APPROVAL IS RECEIVED FROM THE CONTRACTING OFFICER.

STATE OF NEW YORK — KEVIN CHARLES LEFFLER — 079092 — LICENSED PROFESSIONAL ENGINEER
2/6/2012

UNLESS OTHERWISE NOTED, LINEAR DIMENSIONS SHOWN ARE IN MILLIMETERS.

DESIGN COMPLETE SUBMITTAL

SYMB	DESCRIPTION	DATE	APR
FNL	DESIGN COMPLETE SUBMITTAL	02-06-12	KCT

DESIGNED BY: JAS
DATE: 02-06-2012
DRAWN BY: SES
SUBMITTED BY: TETRA TECH
CHECKED BY: RWR
FILE NO.: AF1202$-SE001GN

TETRA TECH

US Army Corps of Engineers
Middle East District

COMMAND & CONTROL FACILITY
KANDAHAR AIR FIELD, AFGHANISTAN
STANDARD DRAWINGS
GENERAL NOTES, SYMBOLS AND ABBREVIATIONS

SHEET REFERENCE NUMBER:
$
SE-001

W:\23308\127-23308-11004\CAD\MED Drawings\AF1202\Standards\Electrical\AF1202$-SE001GN.dwg 3/7/2012 10:19:00 AM Jeffers, Scott

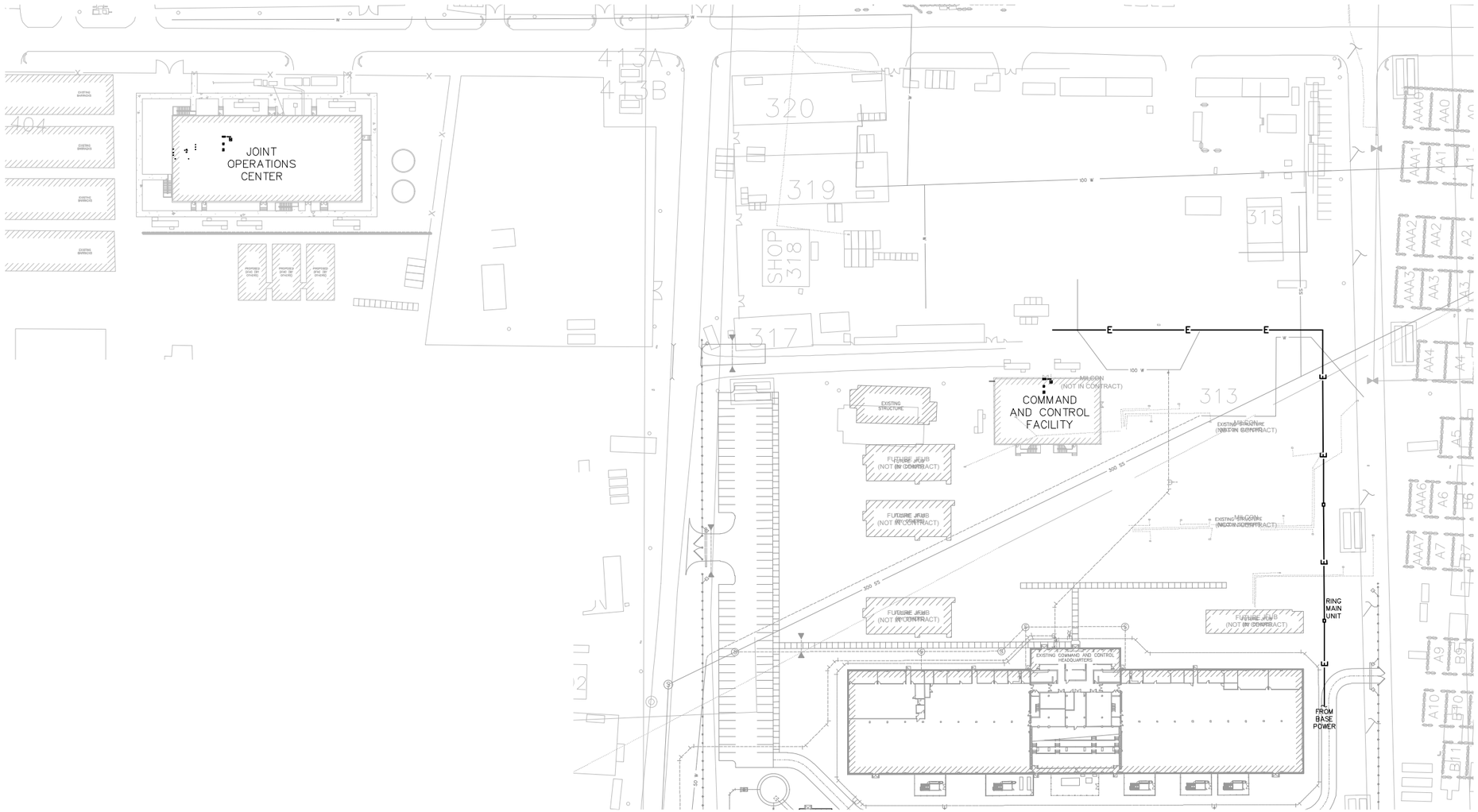

ELECTRICAL SITE OVERALL PLAN
1:2500

100 50 0 50 100 150
1:2500

THESE DRAWINGS ARE "NOT APPROVED FOR CONSTRUCTION" SINCE THESE ARE BASED UPON ASSUMED CONDITIONS. THE CONTRACTOR SHALL NOT PROCEED WITH CONSTRUCTION UNTIL THE ASSUMED CONDITIONS ARE VALIDATED AND APPROVAL IS RECEIVED FROM THE CONTRACTING OFFICER.

STATE OF NEW YORK · KEVIN CHARLES LEGRI · 079092 · LICENSED PROFESSIONAL ENGINEER

2/6/2012

UNLESS OTHERWISE NOTED, LINEAR DIMENSIONS SHOWN ARE IN METERS.

DESIGN COMPLETE SUBMITTAL

SYMB	DESCRIPTION	DATE	APR
FNL	DESIGN COMPLETE SUBMITTAL	02-06-12	KCT

DESIGNED BY: JAS
DATE: 02-06-2012
DRAWN BY: SES
SUBMITTED BY: TETRA TECH
CHECKED BY: RWR
FILE NO.: AF1202$-SE002SGN

TETRA TECH

US Army Corps of Engineers
Middle East District

COMMAND & CONTROL FACILITY
KANDAHAR AIR FIELD, AFGHANISTAN
STANDARD DRAWINGS
ELECTRICAL SITE OVERALL PLAN

SHEET REFERENCE NUMBER:
$
SE-002

W:\23308\127-23308-11004\CAD\WED Drawings\AF1202\Standards\Electrical\AF1202$-SE002SGN.dwg 3/7/2012 10:20:46 AM Jeffers, Scott

NOTE:
TYPE 3 – 1220mm
TYPE 3E – 1220mm
TYPE 3A – 2440mm
TYPE 3AE – 2440mm
TYPE 4 – 1220mm
TYPE 4E – 1220mm
TYPE 4A – 2440mm
TYPE 4AE – 2440mm

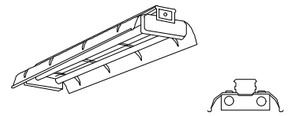

LUMINAIRE REQUIREMENTS:

1. HOUSING – DIE-FORMED, COLD-ROLLED STEEL, WITH REINFORCEMENT RIBS FOR RIGIDITY. ENDCAPS SECURED WITH TABS, SCREWS OR RIVETS. FIXTURE SHALL NOT PERMANENTLY DEFORM OUT OF "SQUARE" WHEN PICKED UP FROM ANY CORNER.
2. FINISH – MULTI-STAGE PHOSPHATE BONDING TREATMENT FINISHED WITH HIGH REFLECTANCE (MINIMUM 85%), BAKED WHITE ENAMEL FINISH.
3. LAMPHOLDERS– PRESSURE-LOCKED TYPE ENCLOSED IN TURRET HOUSING.
4. REFLECTOR – DIE-FORMED, COLD-ROLLED STEEL WITH TRANSVERSE RIBS FOR RIGIDITY. SOLID, 10% UPLIGHT APERATURE OR 20% UPLIGHT APERATURE AS INDICATED IN LIGHTING FIXTURE SCHEDULE.
5. LAMPS – LINEAR FLUORESCENT T8, TYPICALLY WITH WATTAGES AS INDICATED. SEE LIGHTING FIXTURE SCHEDULE.
6. BALLAST – CLASS P, THERMALLY-PROTECTED, HIGH POWER FACTOR (≥ .95), ELECTRONIC TYPE WITH SOUND RATING A. SEE SPECIFICATION OR LIGHTING FIXTURE SCHEDULE FOR BALLAST OPTIONS AND SPECIFICS. (ENERGY-STAR CERTIFIED)
7. CERTIFICATION – UL LISTED AND LABELED.
8. OPTIONS – CHAIN HANGER AND PLATED STEEL WIRE GUARD.
9. PHOTOMETRICS – MINIMUM VALUE OF COEFFICIENT OF UTILIZATION (CU) AND EFFICIENCY, GIVEN INTERIOR CAVITY REFLECTANCES OF 80-50-20:

2 LAMP (F32/T8)

RCR	CU
1	90
2	79
3	69
4	61

EFFICIENCY – 90%

INDUSTRIAL FLUORESCENT (TYPES 3, 3E, 3A ,3AE, 4, 4E, 4A, 4AE)

N.T.S.

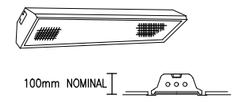

LUMINAIRE REQUIREMENTS:

1. HOUSING – DIE-FORMED, COLD-ROLLED STEEL, WITH REINFORCEMENT RIBS FOR RIGIDITY. ENDCAPS SECURED WITH TABS, SCREWS OR RIVETS. FIXTURE SHALL NOT PERMANENTLY DEFORM OUT OF "SQUARE" WHEN PICKED UP FROM ANY CORNER. DEPTH AS INDICATED UNLESS SPECIFICALLY MANUFACTURED FOR OPTIMAL USE WITH T8 LAMPS.
2. FINISH – MULTI-STAGE PHOSPHATE BONDING TREATMENT FINISHED WITH HIGH REFLECTANCE (MINIMUM 85%), BAKED WHITE ENAMEL FINISH.
3. LENS – 100% ACRYLIC, CLEAR PRISMATIC, PATTERN #12 WITH MINIMUM 3mm THICKNESS.
4. LAMPS – LINEAR FLUORESCENT T8, TYPICALLY WITH WATTAGES AS INDICATED. SEE LIGHTING FIXTURE SCHEDULE.
5. BALLAST – CLASS P, THERMALLY-PROTECTED, HIGH POWER FACTOR (≥ .95), ELECTRONIC TYPE WITH SOUND RATING A. SEE SPECIFICATION OR LIGHTING FIXTURE SCHEDULE FOR BALLAST OPTIONS AND SPECIFICS. (ENERGY-STAR CERTIFIED)
6. CERTIFICATION – UL LISTED AND LABELED.
7. PHOTOMETRICS – MINIMUM VALUE OF COEFFICIENT OF UTILIZATION (CU) AND EFFICIENCY, GIVEN INTERIOR CAVITY REFLECTANCES OF 80-50-20:

2 LAMP (F32/T8)

RCR	CU
1	70
2	63
3	56
4	51

EFFICIENCY – 65%

PRISMATIC LENS RECESSED 305mm X 1220mm TROFFER (TYPES 2, 2A, 2E AND 2AE)

N.T.S.

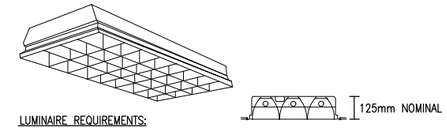

LUMINAIRE REQUIREMENTS:

1. HOUSING – DIE-FORMED, COLD-ROLLED STEEL, WITH REINFORCEMENT RIBS FOR RIGIDITY. ENDCAPS SECURED WITH TABS, SCREWS OR RIVETS. FIXTURE SHALL NOT PERMANENTLY DEFORM OUT OF "SQUARE" WHEN PICKED UP FROM ANY CORNER. INSIDE EDGE OF HOUSING SHALL HAVE FULL FLAT BLACK REVEAL FOR "FLOATING" EFFECT.
2. FINISH – MULTI-STAGE PHOSPHATE BONDING TREATMENT FINISHED WITH HIGH REFLECTANCE (MINIMUM 85%), BAKED WHITE ENAMEL FINISH.
3. LOUVERS – LOW-IRIDESCENT, SEMI-SPECULAR, SILVER ANODIZED ALUMINUM. 915mm MINIMUM DEPTH UNLESS MANUFACTURED SPECIFICALLY FOR USE WITH T8 FLUORESCENT LAMPS.
4. LAMPS – LINEAR FLUORESCENT T8, TYPICALLY. PROVIDE WITH WATTAGES AS INDICATED. SEE LIGHTING FIXTURE SCHEDULE.
5. BALLAST – CLASS P, THERMALLY-PROTECTED, HIGH POWER FACTOR (≥ .95), ELECTRONIC TYPE WITH SOUND RATING A. SEE SPECIFICATION OR LIGHTING FIXTURE SCHEDULE FOR BALLAST OPTIONS AND SPECIFICS. (ENERGY-STAR CERTIFIED)
6. CERTIFICATION – UL LISTED AND LABELED.
7. PHOTOMETRICS – MINIMUM VALUE OF COEFFICIENT OF UTILIZATION (CU) AND EFFICIENCY, GIVEN INTERIOR CAVITY REFLECTANCES OF 80-50-20:

TYPE A – 2 LAMP

RCR	CU
1	82
2	72
3	64
4	57

EFFICIENCY – 75%

TYPE B – 3 LAMP

RCR	CU
1	81
2	72
3	65
4	58

EFFICIENCY – 76%

TYPE C – 4 LAMP

RCR	CU
1	72
2	65
3	58
4	52

EFFICIENCY – 65%

PARABOLIC LENS RECESSED 610mm X 1220mm TROFFER (TYPES 1 AND 1E)

N.T.S.

NOTE:
TYPE 6 – 1220mm

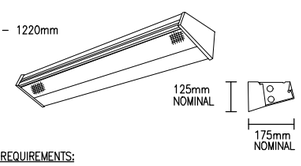

LUMINAIRE REQUIREMENTS:

1. HOUSING – DIE-FORMED, HEAVY-GAUGE, COLD-ROLLED STEEL WITH ENDCAPS MADE FROM THE SAME MATERIAL AS HOUSING.
2. FINISH – MULTI-STAGE PHOSPHATE BONDING TREATMENT FINISHED WITH HIGH REFLECTANCE (MINIMUM 85%), BAKED WHITE ENAMEL FINISH. DARK BRONZE OR BLACK FINISH AVAILABLE. SEE LIGHTING FIXTURE SCHEDULE.
3. LENS – 100% ACRYLIC, HIGH-IMPACT, CLEAR PRISMATIC DIFFUSER.
4. LAMPS – LINEAR FLUORESCENT T8, TYPICALLY WITH WATTAGES AS INDICATED. SEE LIGHTING FIXTURE SCHEDULE.
5. BALLAST – CLASS P, THERMALLY-PROTECTED, HIGH POWER FACTOR (≥ .95), ELECTRONIC TYPE WITH SOUND RATING A. SEE SPECIFICATION OR LIGHTING FIXTURE SCHEDULE FOR BALLAST OPTIONS AND SPECIFICS. (ENERGY-STAR CERTIFIED)
6. CERTIFICATION – UL LISTED AND LABELED.
7. FIXTURE TYPES –

   TYPE A – 610mm LENGTH W/ 2-T8 FLUORESCENT LAMPS
   TYPE B – 915mm LENGTH W/ 2-T8 FLUORESCENT LAMPS
   TYPE C – 1220mm LENGTH W/ 2-T8 FLUORESCENT LAMPS

8. OPTIONS –

   FIXED UP AND DOWN LIGHT
   SWITCHED UP AND/OR DOWN LIGHT
   DOWN LIGHT ONLY WITH SOLID TOP

WALL MOUNTED FLUORESCENT (TYPE 6)

N.T.S.

NOTE:
TYPE 5 – 610mm

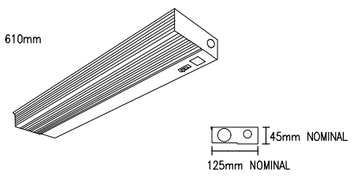

LUMINAIRE REQUIREMENTS:

1. HOUSING – DIE-FORMED, COLD-ROLLED STEEL, WITH REINFORCEMENT RIBS FOR RIGIDITY. ENDCAPS SECURED WITH TABS, SCREWS OR RIVETS.
2. FINISH – MULTI-STAGE PHOSPHATE BONDING TREATMENT FINISHED WITH HIGH REFLECTANCE (MINIMUM 85%), BAKED WHITE ENAMEL FINISH.
3. LENS – 100% ACRYLIC, CLEAR PRISMATIC OR WHITE TRANSLUCENT DIFFUSER WITH LINEAR RIBS FOR EVEN ILLUMINATION.
4. LAMPS – LINEAR FLUORESCENT T8, TYPICALLY WITH WATTAGES AS INDICATED. SEE LIGHTING FIXTURE SCHEDULE.
5. BALLAST – CLASS P, THERMALLY-PROTECTED, HIGH POWER FACTOR (≥ .95), ELECTRONIC TYPE WITH SOUND RATING A. SEE SPECIFICATION OR LIGHTING FIXTURE SCHEDULE FOR BALLAST OPTIONS AND SPECIFICS. (ENERGY-STAR CERTIFIED)
6. CERTIFICATION – UL LISTED AND LABELED.
7. FIXTURE TYPES –

   TYPE A – 610mm LENGTH WITH 1-T8 FLUORESCENT LAMP
   TYPE B – 915mm LENGTH WITH 1-T8 FLUORESCENT LAMP
   TYPE C – 1220mm LENGTH WITH 1-T8 FLUORESCENT LAMP

FLUORESCENT UNDER-CABINET TASK LIGHT (TYPE 5)

N.T.S.

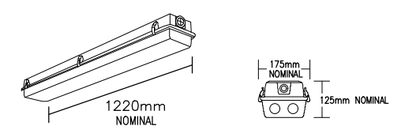

LUMINAIRE REQUIREMENTS:

1. HOUSING – ONE-PIECE, IMPACT-RESISTANT, VANDAL-RESISTANT, FIBERGLASS REINFORCED POLYESTER WITH ENCLOSED COLD-ROLLED STEEL WIREWAY.
2. FINISH – STEEL REFLECTOR WITH MULTI-STAGE PHOSPHATE BONDING TREATMENT FINISHED WITH HIGH REFLECTANCE (MINIMUM 85%), BAKED WHITE ENAMEL FINISH.
3. LENS – 100% CLEAR ACRYLIC/DR OPTICAL DIFFUSER. STIPPLED INTERIOR SURFACES AND SMOOTH EXTERIOR. CLOSED CELL NEOPRENE GASKET WITH CAPTIVE NONMETALLIC, SNAP ACTION CAM LATCHES TO SECURE LENS TO HOUSING.
4. LAMPS – LINEAR FLUORESCENT T8, TYPICALLY WITH WATTAGES AS INDICATED. SEE LIGHTING FIXTURE SCHEDULE.
5. BALLAST – CLASS P, THERMALLY-PROTECTED, HIGH POWER FACTOR (≥ .95), ELECTRONIC TYPE WITH SOUND RATING A. SEE SPECIFICATION OR LIGHTING FIXTURE SCHEDULE FOR BALLAST OPTIONS AND SPECIFICS. (ENERGY-STAR CERTIFIED)
6. CERTIFICATION – UL LISTED AND LABELED. SUITABLE FOR DAMP OR WET LOCATION AS DESIGNATED IN LIGHTING FIXTURE SCHEDULE.
7. PHOTOMETRICS – MINIMUM VALUE OF COEFFICIENT OF UTILIZATION (CU) AND EFFICIENCY, GIVEN INTERIOR CAVITY REFLECTANCES OF 80-50-20:

3 LAMP

RCR	CU
1	79
2	70
3	63
4	56

EFFICIENCY – 75%

FIBERGLASS HOUSING DAMP/WET LOCATION FLUORESCCENT (TYPE 41)

N.T.S.

THESE DRAWINGS ARE "NOT APPROVED FOR CONSTRUCTION" SINCE THESE ARE BASED UPON ASSUMED CONDITIONS. THE CONTRACTOR SHALL NOT PROCEED WITH CONSTRUCTION UNTIL THE ASSUMED CONDITIONS ARE VALIDATED AND APPROVAL IS RECEIVED FROM THE CONTRACTING OFFICER.

STATE OF NEW YORK · KEVIN CHARLES TERRY · 073092 · LICENSED PROFESSIONAL ENGINEER

2/6/2012

UNLESS OTHERWISE NOTED, LINEAR DIMENSIONS SHOWN ARE IN MILLIMETERS.

DESIGN COMPLETE SUBMITTAL

SYMB	DESCRIPTION	DATE	APR
FNL	DESIGN COMPLETE SUBMITTAL	02-06-12	KCT

DESIGNED BY: JAS
DATE: 02-06-2012
DRAWN BY: SES
SUBMITTED BY: TETRA TECH
CHECKED BY: RWR
FILE NO.: AF1202$-SE500DT

TETRA TECH

US Army Corps of Engineers
Middle East District

COMMAND & CONTROL FACILITY
KANDAHAR AIR FIELD, AFGHANISTAN
STANDARD DRAWINGS
GENERAL DETAILS

SHEET REFERENCE NUMBER:
$
SE-500

W:\23308\127-23308-11004\CAD\MED Drawings\AF1202\Standards\Electrical\AF1202$-SE500DT.dwg 3/7/2012 10:21:11 AM Jeffers, Scott

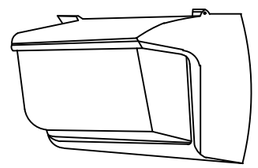

FEATURES

PROFILE: 2 LAMP
SHIELDING: PRISMATIC BOROSILICATE GLASS WITH VANDAL GUARD
BALLAST: HIGH POWER FACTOR, CORE & COIL, (ENERGY-STAR CERTIFIED)

OPTIONS

LAMP TYPE: (2) 26W CFL

GENERAL DESCRIPTION

HOUSING: DIE CAST ALUMINUM HOUSING, DOOR ASSEMBLY AND BACKPLATE

MOUNTING: DIE CAST ALUMINUM BACKPLATE WITH CAST-IN KNOCKOUTS FOR MOUNTING HOLE ALIGNMENT.

REFLECTORS: SPECULAR ANODIZED ALUMINUM

ELECTRICAL: MULTI-TAP BALLAST, WITH PHOTOCELL

FINISH: BAKED-ON POLYURETHANE POWDER COAT PAINT

WALL PAK (TYPE 40E)

N.T.S.

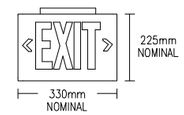

LUMINAIRE REQUIREMENTS:

1. HOUSING – DIE-CAST ALUMINUM OR HIGH-IMPACT, UV-STABILIZED, INJECTION-MOLDED THERMOPLASTIC. SINGLE OR DOUBLE-FACED AS INDICATED.
2. FINISH (ON CAST ALUMINUM HOUSING ONLY) – TEXTURED POWDER COAT FINISH OPTIONS INCLUDE WHITE, WHITE WITH BRUSHED ALUMINUM FACE, BLACK, OR BLACK WITH BRUSHED ALUMINUM FACE.
3. LETTERS/CHEVRONS – MINIMUM 150mm HIGH WITH 19mm STROKE. RED OR GREEN LETTERS AS INDICATED. PROVIDE CHEVRONS AS INDICATED EITHER LEFT, RIGHT OR BOTH DIRECTIONS AS INDICATED. CHEVRONS PUNCHED OUT THROUGH HOUSING AS REQUIRED.
4. EMERGENCY PACK – SOLID-STATE, CONSTANT-CURRENT TYPE BATTERY CHARGER WITH MAINTENANCE-FREE, NICKEL-CADMIUM BATTERY, AC-ON INDICATOR LAMP AND TEST SWITCH.
5. MOUNTING – UNIVERSAL MOUNTING KIT FOR CEILING, WALL OR END-OF-FIXTURE MOUNTING.
6. ILLUMINATION – PROVIDED BY RED, GREEN OR WHITE HIGH-OUTPUT LEDS INSIDE OF FIXTURE HOUSING. PROVIDE POLYSTYRENE DIFFUSER IN COLOR INDICATED WITH FREQUENCY-MATCHED SILKSCREEN COATING FOR MAXIMUM LED LIGHT OUTPUT.
7. CERTIFICATION – UL LISTED AND CERTIFIED FOR DAMP LOCATIONS.

LED STENCIL FACE EXIT SIGN (TYPES 20, 21)

N.T.S.

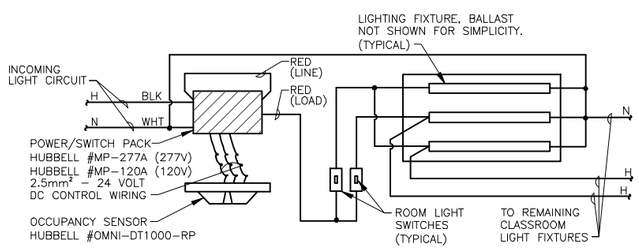

DETAIL NOTES:

A. PAINT ALL SURFACE RACEWAY AND BOXES TO MATCH EXISTING CEILING. (WHERE APPLICABLE).
B. PROVIDE RELAYS WHERE TWO OR MORE CIRCUITS FEED LIGHTING IN SAME ROOM.
C. ADJUST SENSITIVITY OF EACH OCCUPANCY SENSOR DETECT HUMAN MOVEMENT BUT NOT HVAC EQUIPENT ADJUST TIME DELAY FOR OPTIMUM PERFORMANCE. APPLY MASKING SEGMENTS TO DETECTION HEAD WHERE REQUIRED.

OCCUPANCY SENSOR WIRING DIAGRAM (3 / VARIOUS | SE-501)

N.T.S.

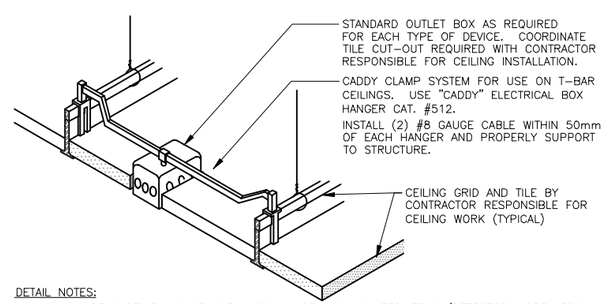

DETAIL NOTES:

A. IN AREAS RECIEVING NEW CEILINGS ALL CEILING MOUNTED ITEMS (DETECTORS, SPEAKERS, ETC) ARE TO BE CENTERED WITHIN THE PATTERN OF THE CEILING PANEL. A 610mm x 1219mm PANEL SCORED TO A 610mm x 610mm PATTERN SHALL HAVE ITEMS CENTERED IN THE 610mm x 610mm PORTION.
B. PROVIDE ADDITIONAL SUPPORT FOR EXIT SIGNS, WHERE REQUIRED.

CEILING MOUNTED DEVICE DETAIL (2 / VARIOUS | SE-501)

N.T.S.

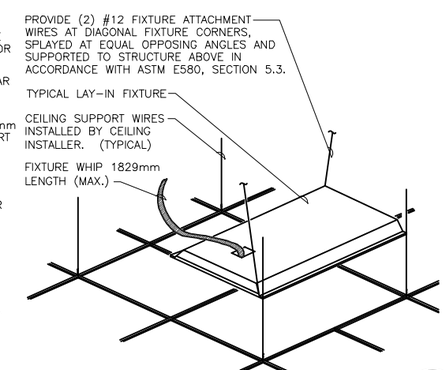

TYPICAL TROFFER MOUNTING DETAIL (1 / VARIOUS | SE-501)

N.T.S.

THESE DRAWINGS ARE "NOT APPROVED FOR CONSTRUCTION" SINCE THESE ARE BASED UPON ASSUMED CONDITIONS. THE CONTRACTOR SHALL NOT PROCEED WITH CONSTRUCTION UNTIL THE ASSUMED CONDITIONS ARE VALIDATED AND APPROVAL IS RECEIVED FROM THE CONTRACTING OFFICER.

STATE OF NEW YORK · KEVIN CHARLES TERRY · 079093 · LICENSED PROFESSIONAL ENGINEER
2/6/2012

UNLESS OTHERWISE NOTED, LINEAR DIMENSIONS SHOWN ARE IN MILLIMETERS.

DESIGN COMPLETE SUBMITTAL

SYMB	DESCRIPTION	DATE	APR
FNL	DESIGN COMPLETE SUBMITTAL	02-06-12	KCT

DESIGNED BY: JAS
DATE: 02-06-2012
DRAWN BY: SES
SUBMITTED BY: TETRA TECH
CHECKED BY: RWR
FILE NO.: AF1202$-SE501DT

TETRA TECH

US Army Corps of Engineers
Middle East District

COMMAND & CONTROL FACILITY
KANDAHAR AIR FIELD, AFGHANISTAN
STANDARD DRAWINGS
GENERAL DETAILS

SHEET REFERENCE NUMBER:
$
SE-501

W:\2308\127-23308-11004\CAD\MED Drawings\AF1202\Standards\Electrical\AF1202$-SE501DT.dwg 3/7/2012 10:21:27 AM Jeffers, Scott

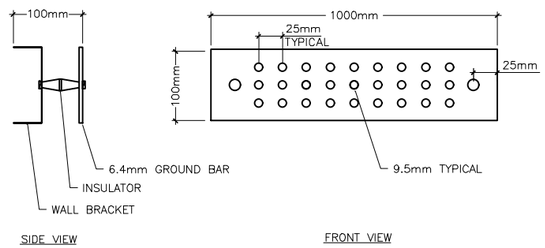

COPPER GROUND BAR DETAIL (3 / VARIOUS SE-502)
N.T.S.

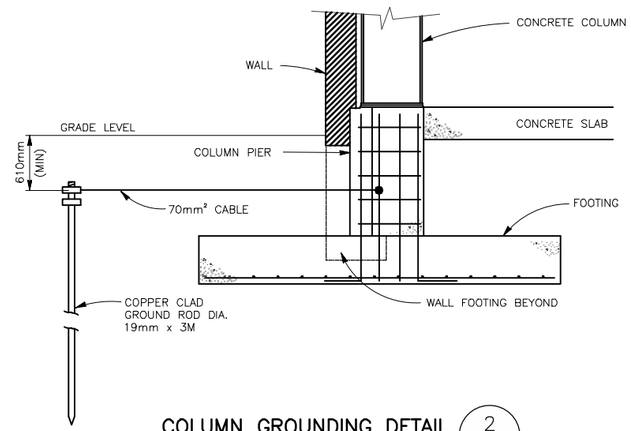

COLUMN GROUNDING DETAIL (2 / VARIOUS SE-502)
N.T.S.

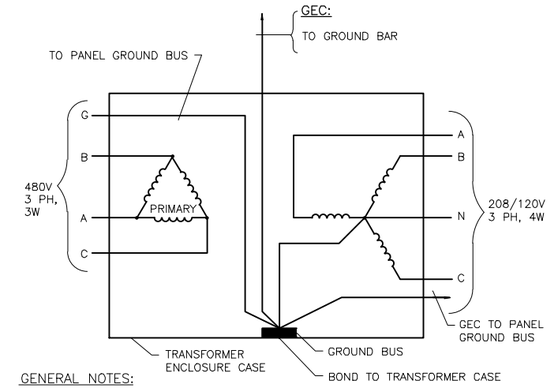

GENERAL NOTES:

A. GROUNDING ELECTRODE CONDUCTOR (GEC) SIZED PER 2008 NEC TABLE 250-66.
B. EQUIPMENT GROUNDING CONDUCTOR (EGC) SIZED PER 2008 NEC TABLE 250-122.

TYPICAL TRANSFORMER CONNECTION SEPERATELY DERIVED SYSTEM (1 / VARIOUS SE-502)
N.T.S.

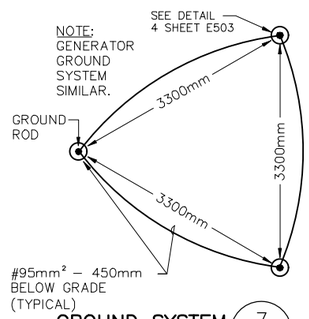

GROUND SYSTEM (7 / VARIOUS SE-502)
N.T.S.

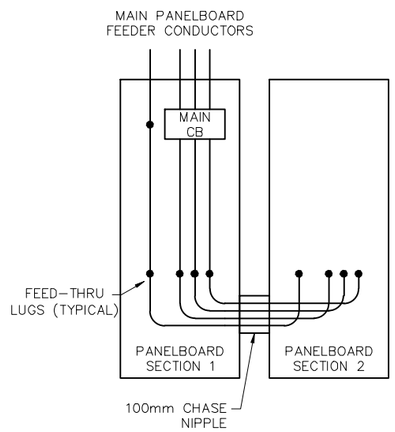

MULTI-SECTION PANELBOARD (6 / VARIOUS SE-502)
N.T.S.

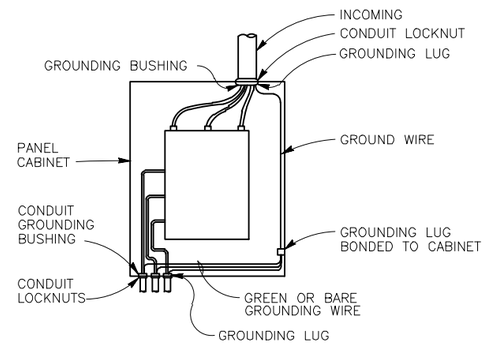

NOTES:

1. ALL WIRES TO BE NEATLY LACED.
2. AT THE POINT OF ATTACHMENT OF THE GROUNDING LUG TO THE CABINET, THE SURFACES SHALL BE SCRAPED FREE OF PAINT AND THOROUGHLY CLEANED TO INSURE PROPER BONDING.
3. NEUTRAL CONDUCTOR NOT SHOWN FOR CLARITY.

TYPICAL PANEL GROUNDING (5 / VARIOUS SE-502)
N.T.S.

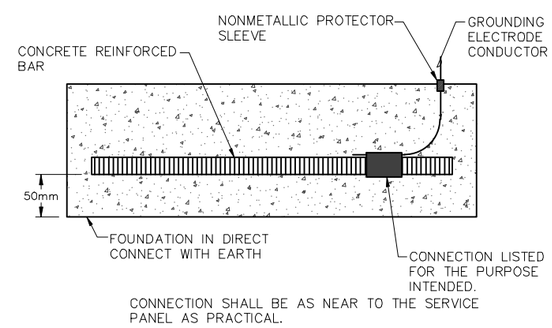

CONNECTION SHALL BE AS NEAR TO THE SERVICE PANEL AS PRACTICAL.

CONCRETE-ENCASED ELECTRODE (4 / VARIOUS SE-502)
N.T.S.

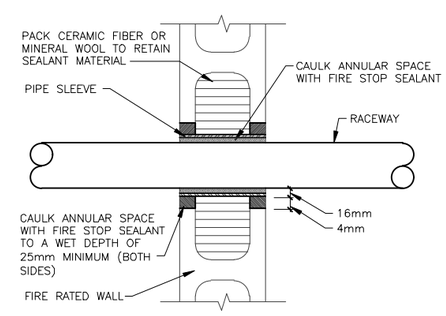

FIRE RATED (1 HOUR) CMU WALL PENETRATION DETAIL (8 / VARIOUS SE-502)
N.T.S.

THESE DRAWINGS ARE "NOT APPROVED FOR CONSTRUCTION" SINCE THESE ARE BASED UPON ASSUMED CONDITIONS. THE CONTRACTOR SHALL NOT PROCEED WITH CONSTRUCTION UNTIL THE ASSUMED CONDITIONS ARE VALIDATED AND APPROVAL IS RECEIVED FROM THE CONTRACTING OFFICER.

STATE OF NEW YORK · KEVIN CHARLES LEGG · 079092 · LICENSED PROFESSIONAL ENGINEER
2/6/2012

UNLESS OTHERWISE NOTED, LINEAR DIMENSIONS SHOWN ARE IN METERS.

DESIGN COMPLETE SUBMITTAL

SYMB	DESCRIPTION	DATE	APR
FNL	DESIGN COMPLETE SUBMITTAL	02-06-12	KCT

DESIGNED BY: JAS
DATE: 02-06-2012
DRAWN BY: SES
SUBMITTED BY: TETRA TECH
CHECKED BY: RWR
FILE NO.: AF1202$-SE502DT

TETRA TECH

US Army Corps of Engineers
Middle East District

COMMAND & CONTROL FACILITY
KANDAHAR AIR FIELD, AFGHANISTAN
STANDARD DRAWINGS
GENERAL DETAILS

SHEET REFERENCE NUMBER:
$
SE-502

W:\23308\127-23308-11004\CAD\MED Drawings\AF1202\Standards\Electrical\AF1202$-SE502DT.dwg 3/7/2012 10:21:42 AM Jeffers, Scott

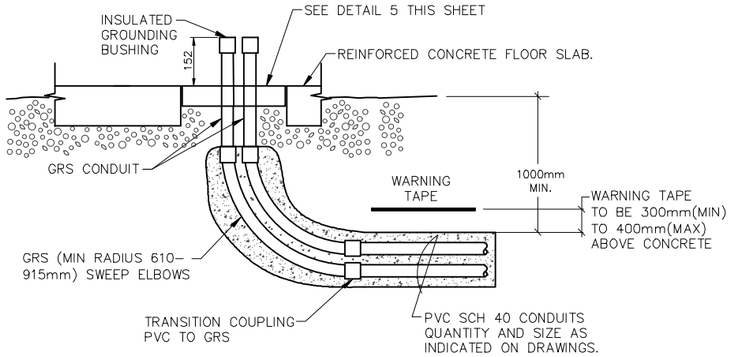

FRONT ELEVATION

TYPICAL SERVICE ELEVATION (3)

N.T.S. XE–100 | SE–503

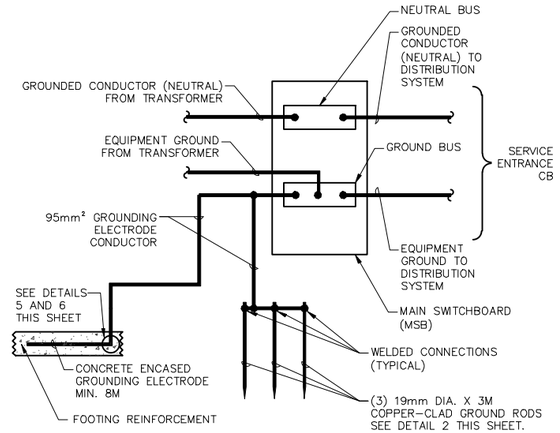

NOTES:

1. BOND OTHER METAL PIPING GROUND TERMINALS TO THE SERVICE GROUNDING ELECTRODE SYSTEM.
2. THE GROUNDING ELECTRODE CONDUCTOR SHALL ONLY BE CONNECTED TO GROUNDING ELECTRODES THAT ARE AVAILABLE ON THE PREMISES.
3. PROTECT GROUNDING ELECTRODE CONDUCTOR WITH NONMETALLIC RACEWAY WHEN CONDUCTOR PENETRATES FLOOR SLABS AND WALLS.
4. ALL GROUNDING ELECTRODE CONDUCTORS, BONDING JUMPERS AND GROUNDING CONDUCTORS SHALL BE COPPER.
5. BOND SUNSHADE STEEL TO THE GROUND BUS.
6. DO NOT BOND THE NEUTRAL AND GROUND BUSSES AT THE MSB.

MSB GROUNDING ELECTRODE CONNECTION (2)

N.T.S. VARIOUS | SE–503

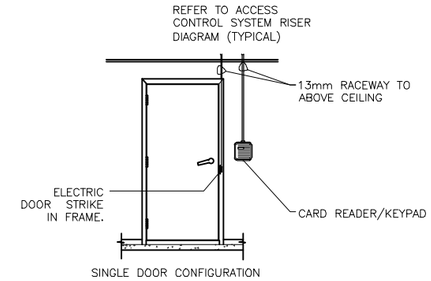

ACCESS CONTROL SYSTEM DOOR DETAIL (1)

N.T.S. VARIOUS | SE–503

PROVIDE EMPTY 16mm CONDUIT BETWEEN RCU AND AHU FOR CONTROL WIRING, COORDINATE WITH MECHANICAL.

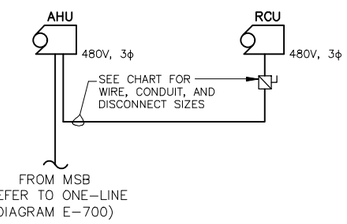

WIRE SIZE TABLE

UNIT	PHASE CONDUCTOR	GROUND	RACEWAY SIZE	DISCONNECT SWITCH	FUSE SIZE
RCU–A1 RCU–A2 RCU–A3 RCU–A5 RCU–A6 RCU–C2	(3)16mm²	(1)6mm²	25mm	60A, 3P, NEMA 4X	60A
RCU–A4	(3)25mm²	(1)10mm²	32mm	100A, 3P, NEMA 4X	80A
RCU–C3					90A
RCU–C1	(3)35mm²	(1)10mm²	38mm	100A, 3P, NEMA 4X	100A

TYPICAL AHU, RCU WIRING DIAGRAM (6)

N.T.S. VARIOUS | SE–503

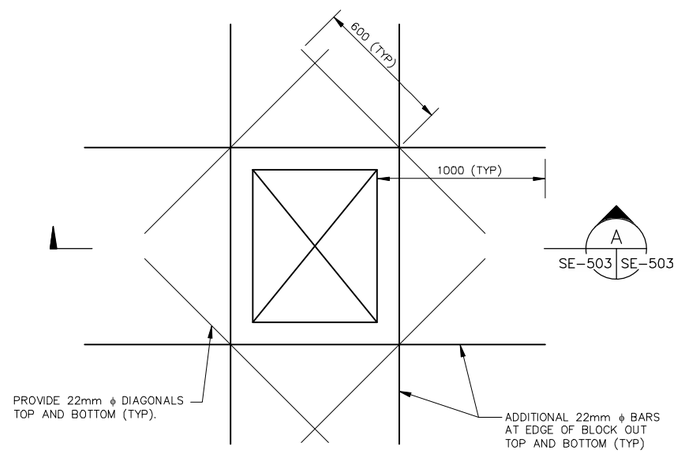

A
SE–503 | SE–503

TYPICAL BLOCK OUT DETAIL (5)

N.T.S. SE–503 | SE–503

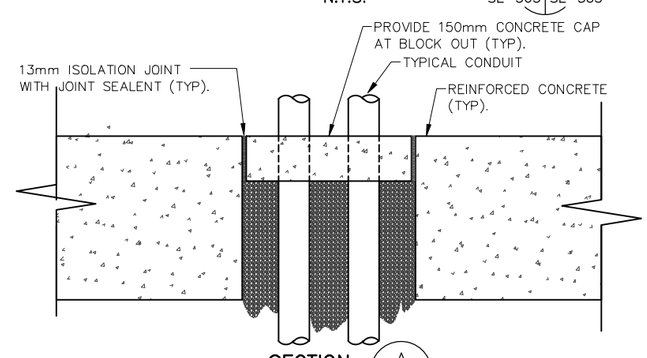

DISTRIBUTION SYSTEM GROUNDING WITH SECB (4)

N.T.S. VARIOUS | SE–503

SECTION (A)

N.T.S. SE–503 | SE–503

THESE DRAWINGS ARE "NOT APPROVED FOR CONSTRUCTION" SINCE THESE ARE BASED UPON ASSUMED CONDITIONS. THE CONTRACTOR SHALL NOT PROCEED WITH CONSTRUCTION UNTIL THE ASSUMED CONDITIONS ARE VALIDATED AND APPROVAL IS RECEIVED FROM THE CONTRACTING OFFICER.

STATE OF NEW YORK · KEVIN CHARLES TERRY · 073092 · LICENSED PROFESSIONAL ENGINEER

2/6/2012

UNLESS OTHERWISE NOTED, LINEAR DIMENSIONS SHOWN ARE IN METERS.

DESIGN COMPLETE SUBMITTAL

SYMB	DESCRIPTION	DATE	APR
FNL	DESIGN COMPLETE SUBMITTAL	02–06–12	KCT

DESIGNED BY: JAS
DATE: 02–06–2012
DRAWN BY: SES
SUBMITTED BY: TETRA TECH
CHECKED BY: RWR
FILE NO.: AF1202$–SE503DT

TETRA TECH

US Army Corps of Engineers Middle East District

COMMAND & CONTROL FACILITY
KANDAHAR AIR FIELD, AFGHANISTAN
STANDARD DRAWINGS
GENERAL DETAILS

SHEET REFERENCE NUMBER: $
SE–503

W:\23308\127–23308–11004\CAD\MED Drawings\AF1202\Standards\Electrical\AF1202$–SE503DT.dwg 3/7/2012 10:21:59 AM Jeffers, Scott

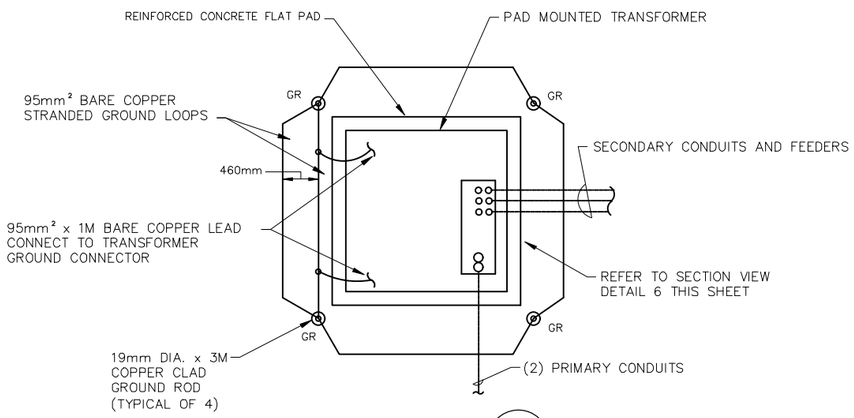

TRANSFORMER PAD (4)
N.T.S. VARIOUS | SE-504

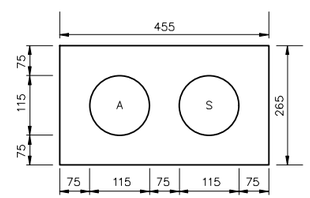

DUCT BANK DETAIL (3)
N.T.S. VARIOUS | SE-504

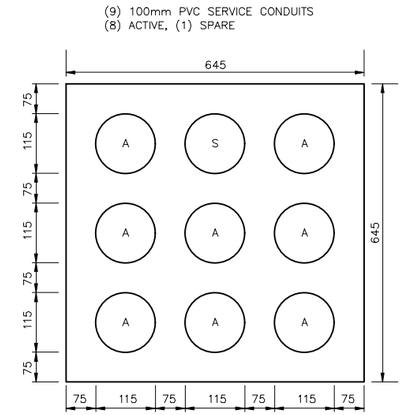

DUCT NOTE:
A = ACTIVE
S = SPARE

DUCT BANK DETAIL (2)
N.T.S. VARIOUS | SE-504

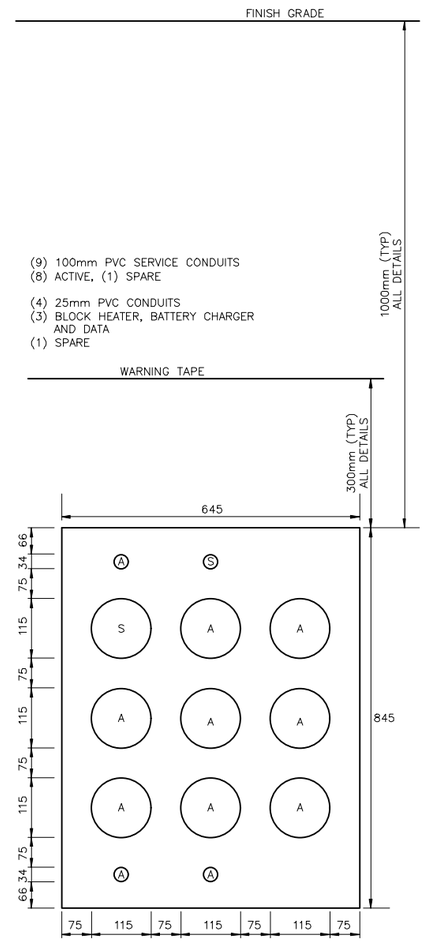

GENERATOR DUCT BANK DETAIL (1)
(TYPICAL OF 3) N.T.S. VARIOUS | SE-504

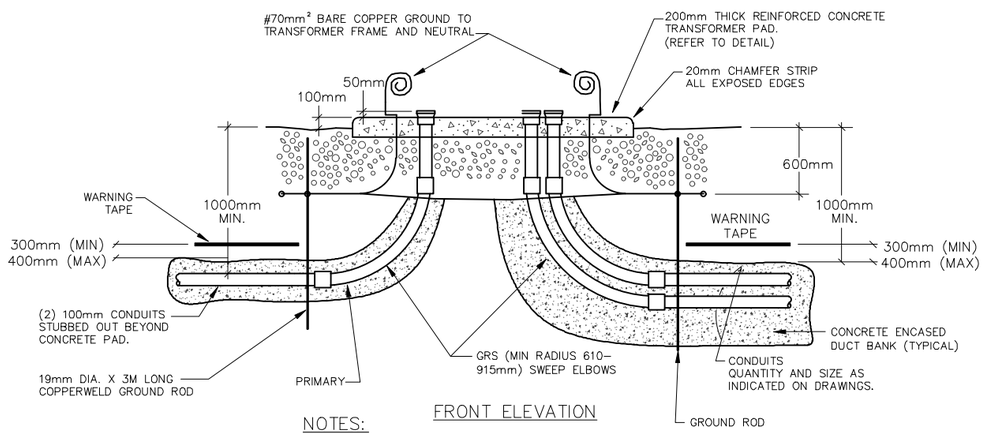

FRONT ELEVATION

NOTES:

1. DIRECTION OF CONDUITS TO BE DETERMINED BY FIELD APPLICATION.
2. METALLIC CONDUITS SHALL BE GROUNDED BY THE CONTRACTOR USING GROUNDING BUSHINGS CONNECTED TO THE GROUND GRID.
3. TERMINATE AND CAP SPARE RACEWAY.
4. CONCRETE ENCASED CONDUITS SHALL BE SCHEDULE 40 PVC, TRANSITION TO GRS CONDUITS AT BUILDING PENETRATIONS, ELBOWS AND WHEREVER CONDUIT IS EXPOSED.
5. BARE COPPER GROUNDS SHALL BE EXOTHERMICALLY WELDED TO GROUND ROD BEFORE CONCRETE PAD IS POURED.

PAD MOUNTED TRANSFORMER SECTION (6)
N.T.S. VARIOUS | SE-504

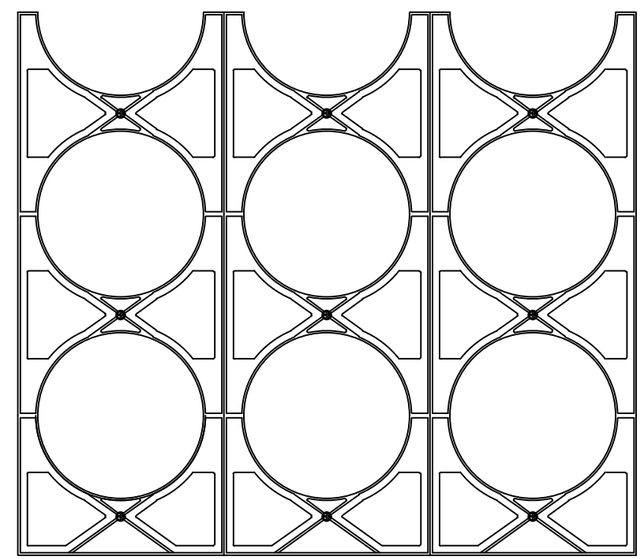

NOTE:
DUCT SPACERS SHALL BE SIZED AND CONFIGURED TO MATCH DUCT DETAIL.

DUCT SPACERS (5)
N.T.S. TYP | SE-504

THESE DRAWINGS ARE "NOT APPROVED FOR CONSTRUCTION" SINCE THESE ARE BASED UPON ASSUMED CONDITIONS. THE CONTRACTOR SHALL NOT PROCEED WITH CONSTRUCTION UNTIL THE ASSUMED CONDITIONS ARE VALIDATED AND APPROVAL IS RECEIVED FROM THE CONTRACTING OFFICER.

STATE OF NEW YORK · KEVIN CHARLES TEGRT · 073683 · LICENSED PROFESSIONAL ENGINEER

2/6/2012

UNLESS OTHERWISE NOTED, LINEAR DIMENSIONS SHOWN ARE IN METERS.

DESIGN COMPLETE SUBMITTAL

SYMB	DESCRIPTION	DATE	APR
FNL	DESIGN COMPLETE SUBMITTAL	02-06-12	KCT

DESIGNED BY: JAS
DATE: 02-06-2012
DRAWN BY: SES
SUBMITTED BY: TETRA TECH
CHECKED BY: RWR
FILE NO.: AF1202$-SE504DT

TETRA TECH

US Army Corps of Engineers Middle East District

COMMAND & CONTROL FACILITY
KANDAHAR AIR FIELD, AFGHANISTAN
STANDARD DRAWINGS
GENERAL DETAILS

SHEET REFERENCE NUMBER:
$
SE-504

W:\23308\127-23308-11004\CAD\MED Drawings\AF1202\Standards\Electrical\AF1202$-SE504DT.dwg 3/7/2012 10:22:26 AM Jeffers, Scott

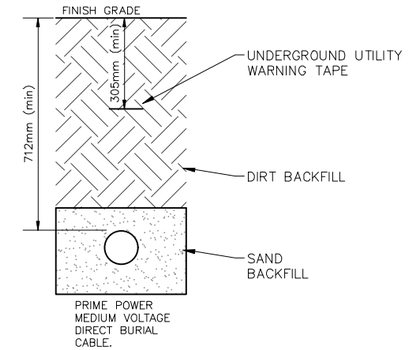

TRENCH DETAIL 1 (XE-101 | SE-505)
N.T.S.

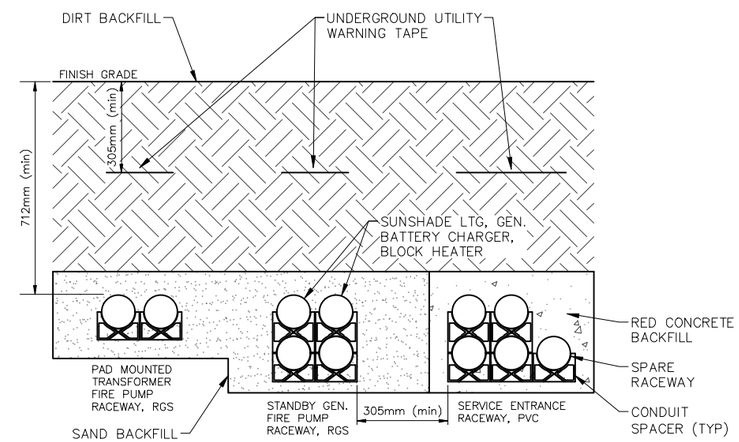

TRENCH DETAIL 2 (XE-101 | SE-505)
N.T.S.

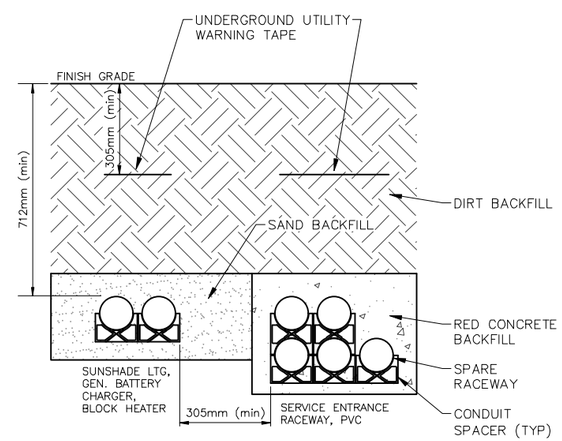

TRENCH DETAIL 3 (XE-101 | SE-505)
N.T.S.

THESE DRAWINGS ARE "NOT APPROVED FOR CONSTRUCTION" SINCE THESE ARE BASED UPON ASSUMED CONDITIONS. THE CONTRACTOR SHALL NOT PROCEED WITH CONSTRUCTION UNTIL THE ASSUMED CONDITIONS ARE VALIDATED AND APPROVAL IS RECEIVED FROM THE CONTRACTING OFFICER.

STATE OF NEW YORK · KEVIN CHARLES TERRY · 073092 · LICENSED PROFESSIONAL ENGINEER
2/6/2012

UNLESS OTHERWISE NOTED, LINEAR DIMENSIONS SHOWN ARE IN METERS.

DESIGN COMPLETE SUBMITTAL

SYMB	DESCRIPTION	DATE	APR
FNL	DESIGN COMPLETE SUBMITTAL	02-06-12	KCT

DESIGNED BY: JAS
DATE: 02-06-2012
DRAWN BY: SES
SUBMITTED BY: TETRA TECH
CHECKED BY: RWR
FILE NO.: AF1202$-SE505DT

TETRA TECH

US Army Corps of Engineers
Middle East District

COMMAND & CONTROL FACILITY
KANDAHAR AIR FIELD, AFGHANISTAN
STANDARD DRAWINGS
GENERAL DETAILS

SHEET REFERENCE NUMBER:
$
SE-505

W:\23308\127-23308-11004\CAD\MED Drawings\AF1202\Standards\Electrical\AF1202$-SE505DT.dwg 3/7/2012 10:22:42 AM Jeffers, Scott

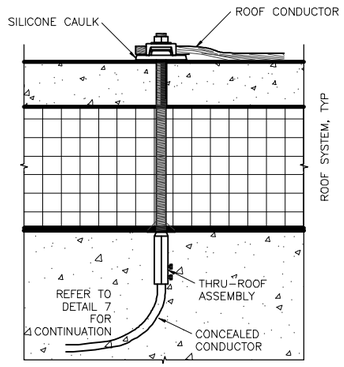

THRU ROOF DETAL (4)
N.T.S. VARIOUS | SE-520

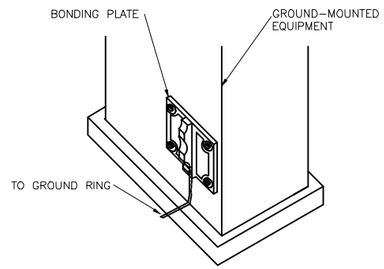

BONDING PLATE DETAIL (3)
N.T.S. VARIOUS | SE-520

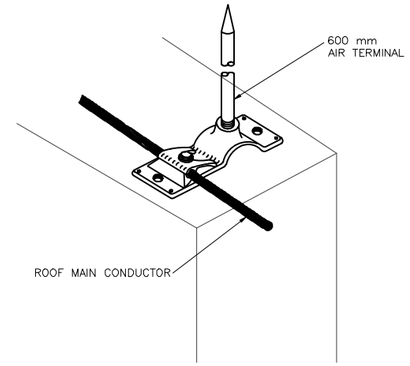

PARAPET AIR TERMINAL DETAIL (2)
N.T.S. VARIOUS | SE-520

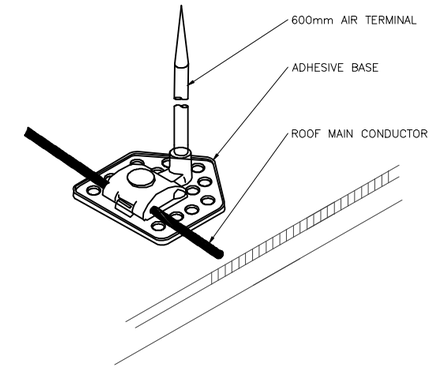

ADHESIVE BOLT BASE AIR TERMINAL DETAIL (1)
N.T.S. VARIOUS | SE-520

NOTE:
INSTALL ALL EQUIPMENT PER MANUFACTURES INSTRUCTIONS - TYPICAL THIS SHEET.

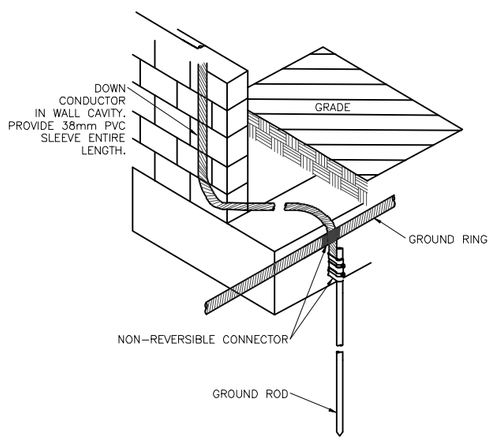

GROUNDING DETAIL (7)
N.T.S. VARIOUS | SE-520

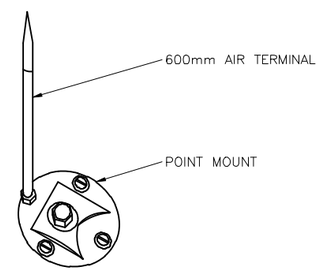

EQUIPMENT AIR TERMINAL AND FLAT SURFACE MOUNTING PLATE (6)
N.T.S. VARIOUS | SE-520

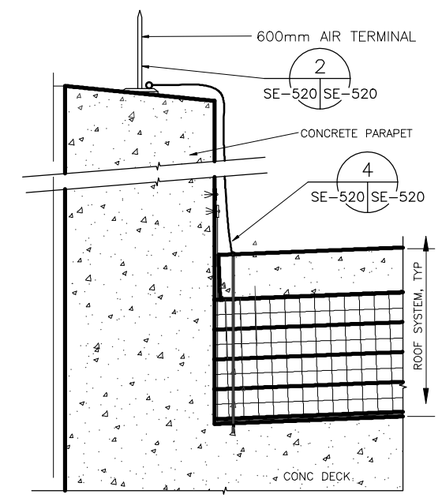

GROUNDING DETAIL (5)
N.T.S. VARIOUS | SE-520

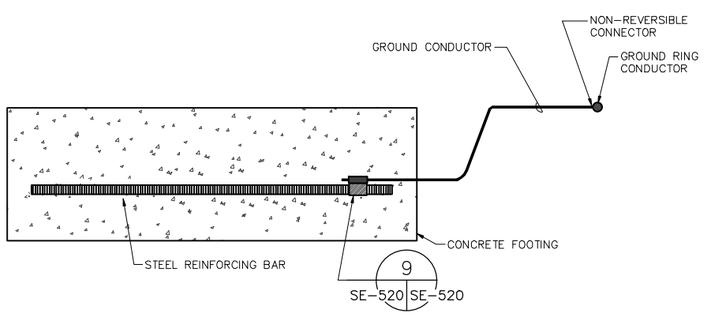

GROUNDING DETAIL (10)
N.T.S. VARIOUS | SE-520

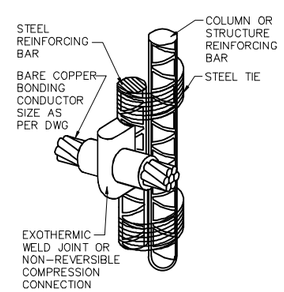

BUILDING GROUNDING ELECTRODE CONNECTION (9)
N.T.S. VARIOUS | SE-520

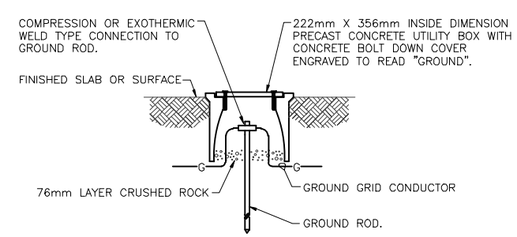

GROUND ROD INSPECTION WELL DETAIL (8)
N.T.S. VARIOUS | SE-520

THESE DRAWINGS ARE "NOT APPROVED FOR CONSTRUCTION" SINCE THESE ARE BASED UPON ASSUMED CONDITIONS. THE CONTRACTOR SHALL NOT PROCEED WITH CONSTRUCTION UNTIL THE ASSUMED CONDITIONS ARE VALIDATED AND APPROVAL IS RECEIVED FROM THE CONTRACTING OFFICER.

STATE OF NEW YORK · KEVIN CHARLES TEGRY · 075083 · LICENSED PROFESSIONAL ENGINEER
2/6/2012

UNLESS OTHERWISE NOTED, LINEAR DIMENSIONS SHOWN ARE IN METERS.

DESIGN COMPLETE SUBMITTAL

SYMB	DESCRIPTION	DATE	APR
FNL	DESIGN COMPLETE SUBMITTAL	02-06-12	KCT

DESIGNED BY: JAS
DATE: 02-06-2012
DRAWN BY: SES
SUBMITTED BY: TETRA TECH
CHECKED BY: RWR
FILE NO.: AF1202$-SE520DT

TETRA TECH

US Army Corps of Engineers
Middle East District

COMMAND & CONTROL FACILITY
KANDAHAR AIR FIELD, AFGHANISTAN
STANDARD DRAWINGS
LIGHTNING PROTECTION DETAILS

SHEET REFERENCE NUMBER:
$
SE-520

W:\23308\127-23308-11004\CAD\MED Drawings\AF1202\Standards\Electrical\AF1202$-SE520DT.dwg 3/7/2012 10:23:01 AM Jeffers, Scott

LIGHT FIXTURE SCHEDULE

NOTE:
ALL LIGHT FIXTURES SHALL BE ENERGY–STAR CERTIFIED.

ITEM	SYMBOL	ITEM	VOLTAGE	LAMPS			MANUFACTURERS (OR EQUAL)	
				NO.	WATTAGE	TYPE	NAME	MODEL OR SERIES
1		COMMERCIAL 610mm X 1220mm PARABOLIC TROFFER, RECESSED IN GRID, 3–LAMP	277V	3	32 (96)	F32T8	LITHONIA	2PM4 SERIES OR EQUAL
1E		COMMERCIAL 610mm X 1220mm PARABOLIC TROFFER, RECESSED IN GRID, 3–LAMP, WITH BATTERY BACKUP	277V	3	32 (96)	F32T8	LITHONIA	2PM4 SERIES OR EQUAL
2		COMMERCIAL 305mm X 1220mm PARABOLIC TROFFER, RECESSED IN GRID, 2–LAMP	277V	2	32 (64)	F32T8	LITHONIA	SP8 SERIES OR EQUAL
2E		COMMERCIAL 305mm X 1220mm PARABOLIC TROFFER, RECESSED IN GRID, 2–LAMP, WITH BATTERY BACKUP	277V	2	32 (64)	F32T8	LITHONIA	SP8 SERIES OR EQUAL
2A		COMMERCIAL 305mm X 1220mm PARABOLIC TROFFER, RECESSED IN GYP, 2–LAMP	277V	2	32 (64)	F32T8	LITHONIA	SP8 SERIES OR EQUAL
2AE		COMMERCIAL 305mm X 1220mm PARABOLIC TROFFER, RECESSED IN GYP, 2–LAMP, WITH BATTERY BACKUP	277V	2	32 (64)	F32T8	LITHONIA	SP8 SERIES OR EQUAL
3		COMMERCIAL 1220mm INDUSTRIAL CHAIN/STEM HUNG, 2–LAMP	277V	2	32 (64)	F32T8	LITHONIA	L SERIES OR EQUAL
3E		COMMERCIAL 1220mm INDUSTRIAL CHAIN/STEM HUNG, 2–LAMP, WITH BATTERY BACKUP	277V	2	32 (64)	F32T8	LITHONIA	L SERIES OR EQUAL
3A		COMMERCIAL 2440mm INDUSTRIAL CHAIN/STEM HUNG, 2–LAMP	277V	2	32 (64)	F32T8	LITHONIA	TL SERIES OR EQUAL
3AE		COMMERCIAL 2440mm INDUSTRIAL CHAIN/STEM HUNG, 2–LAMP, WITH BATTERY BACKUP	277V	2	32 (64)	F32T8	LITHONIA	TL SERIES OR EQUAL
4		COMMERCIAL 1220mm INDUSTRIAL CHAIN/STEM HUNG, 3–LAMP	277V	3	32 (96)	F32T8	LITHONIA	EJ SERIES OR EQUAL
4E		COMMERCIAL 1220mm INDUSTRIAL CHAIN/STEM HUNG, 3–LAMP, WITH BATTERY BACKUP	277V	3	32 (96)	F32T8	LITHONIA	EJ SERIES OR EQUAL
4A		COMMERCIAL 2440mm INDUSTRIAL CHAIN/STEM HUNG, 3–LAMP	277V	3	32 (96)	F32T8	LITHONIA	TEJ SERIES OR EQUAL
4AE		COMMERCIAL 2440mm INDUSTRIAL CHAIN/STEM HUNG, 3–LAMP, WITH BATTERY BACKUP	277V	3	32 (96)	F32T8	LITHONIA	TEJ SERIES OR EQUAL
5		UNDER–CABINET 610mm, 1–LAMP	277V	1	17 (17)	F17T8	LITHONIA	N2S SERIES OR EQUAL
6		WALL BRACKET, 1220mm	277V	2	32 (64)	F32T8	LITHONIA	WP SERIES OR EQUAL
6E		WALL BRACKET, 1220mm, WITH BATTERY BACKUP	277V	2	32 (64)	F32T8	LITHONIA	WP SERIES OR EQUAL
20		EXIT LIGHT WITH BATTERY BACKUP (WALL MOUNTED SINGLE FACED)	277V	–	–	LED	LITHONIA	LE–S–1–R–120/277–EL–N
21		EXIT LIGHT WITH BATTERY BACKUP (CEILING MOUNTED DOUBLE FACED)	277V	–	–	LED	LITHONIA	LE–S–2–R–120/277–EL–N
40E		BUILDING MOUNTED CF WALL PACK WITH INTEGRAL BATTERY BACKUP AND VANDAL GUARD	277V	2	26	DTT CF	LITHONIA	TWF1–2/26DTT–277–ELDWC–TWF1VG
41		VANDAL–RESISTANT, WET LOCATION 1270mm X 206mm INDUSTRIAL, SURFACE MOUNT/STEM HUNG, 2–LAMP	120V	2	32 (64)	F32T8	LITHONIA	VRI–2–32–MVOLT–GEB10IS

THESE DRAWINGS ARE "NOT APPROVED FOR CONSTRUCTION" SINCE THESE ARE BASED UPON ASSUMED CONDITIONS. THE CONTRACTOR SHALL NOT PROCEED WITH CONSTRUCTION UNTIL THE ASSUMED CONDITIONS ARE VALIDATED AND APPROVAL IS RECEIVED FROM THE CONTRACTING OFFICER.

STATE OF NEW YORK
KEVIN CHARLES TERRY
079093
LICENSED PROFESSIONAL ENGINEER
2/6/2012

UNLESS OTHERWISE NOTED, LINEAR DIMENSIONS SHOWN ARE IN MILLIMETERS.

DESIGN COMPLETE SUBMITTAL

SYMB	DESCRIPTION	DATE	
FNL	DESIGN COMPLETE SUBMITTAL	02–06–12	KCT

DESIGNED BY: JAS
DATE: 02–06–2012
DRAWN BY: SES
SUBMITTED BY: TETRA TECH
CHECKED BY: RWR
FILE NO.: AF1202$–SE600SC

TETRA TECH

US Army Corps of Engineers
Middle East District

COMMAND & CONTROL FACILITY
KANDAHAR AIR FIELD, AFGHANISTAN
STANDARD DRAWINGS
LIGHT FIXTURE SCHEDULE

SHEET REFERENCE NUMBER:
$
SE–600

W:\2330B\127–23308–11004\CAD\MED Drawings\AF1202\Standards\Electrical\AF1202$–SE600SC.dwg 3/7/2012 10:23:16 AM Jeffers, Scott

PLAN LEGEND (TELECOM)

FRONT DATA	DATA CABINET
FRONT FUTURE	FUTURE DATA CABINET
	19mm PLYWOOD
FB	FLOOR BOX *SEE GENERAL NOTE 3
JB	JUNCTION BOX
W	WALL PHONE OUTLET
6"(152.4mm) x 6"(152.4mm)	UNDERFLOOR CABLE TRAY
	CONDUIT PATH
TV	CATV OUTLET MOUNT 2130 AFF

DETAIL CALLOUT

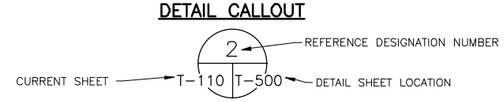

DETAIL TITLE ON THE DETAIL SHEET

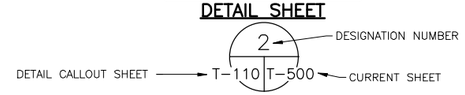

ELEVATION/SECTION CALLOUT

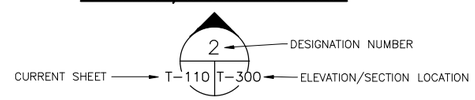

GENERAL NOTES:

1. ALL CONDUIT/CABLE TRAY PENETRATIONS THRU WALLS OR CEILINGS SHALL BE SEALED/FIRESTOPPED.
2. FOR ELECTRICAL INSTALLATION SEISMIC REQUIREMENTS, SEE SPECIFICATION 26 05 48 00.10.
3. FLOOR BOXES IN JOC 107 CONTAIN 2 DATA OUTLETS.
   FLOOR BOXES FOR PRINTERS AND FAXES CONTAIN 2 DATA OUTLETS.
   FLOOR BOXES IN ALL OTHER LOCATIONS CONTAIN 4 DATA OUTLETS.
4. COORDINATE EXACT LOCATION OF CATV OUTLET WITH CONTRACTING OFFICER PRIOR TO ROUGH-IN.

ABBREVIATIONS

AFG	ABOVE FINISHED GRADE
AFF	ABOVE FINISHED FLOOR
A	AMPERE
AIC	AMPERE INTERRUPTING CAPACITY
BET	BUILDING ENTRANCE TERMINAL
BFG	BELOW FINISHED GRADE
BLDG	BUILDING
CATV	CABLE TELEVISION
CKT	CIRCUIT
C	CONDUIT
CND	CONDUCTOR
EC	CONTRACTOR RESPONSIBLE FOR ELECTRICAL WORK
FB	FLOOR BOX
FOC	FIBER OPTIC CABLE
GFE	GOVERNMENT FURNISHED CONTRACTOR INSTALLED
GFGI	GOVERNMENT FURNISHED GOVERNMENT INSTALLED
GFI	GROUND FAULT INTERRUPTING
GRS	GALVANIZIED RIGID STEEL CONDUIT
HH	HANDHOLE
HZ	HERTZ
M	METERS
MM	MULTIMODE
mm	MILLIMETERS
MH	MANHOLE
MTD	MOUNTED
OSP	OUTSIDE PLANS
PET	PROTECTED ENTRANCE TERMINATION
PP	PATCH PANEL
RM	ROOM
SSUCV	SMALL SQUARE UNDERGROUND CABLE VAULT
SM	SINGLEMODE
TC	CONTRACTOR RESPONSIBLE FOR TELECOMMUNICATIONS WORK
TMGB	TELECOMMUNICATIONS MAIN GROUNDING BUS
TR	TELECOMMUNICATIONS ROOM
UTP	UNSHIELDED TWISTED PAIR
VPP	VOICE PATCH PANEL
WM	WALL MOUNTED

THESE DRAWINGS ARE "NOT APPROVED FOR CONSTRUCTION" SINCE THESE ARE BASED UPON ASSUMED CONDITIONS. THE CONTRACTOR SHALL NOT PROCEED WITH CONSTRUCTION UNTIL THE ASSUMED CONDITIONS ARE VALIDATED AND APPROVAL IS RECEIVED FROM THE CONTRACTING OFFICER.

STATE OF NEW YORK · KEVIN CHARLES TERRY · 073092 · LICENSED PROFESSIONAL ENGINEER

2/6/2012

UNLESS OTHERWISE NOTED, LINEAR DIMENSIONS SHOWN ARE IN MILLIMETERS.

DESIGN COMPLETE SUBMITTAL

SYMB	DESCRIPTION	DATE	APR
FNL	DESIGN COMPLETE SUBMITTAL	02-06-12	KCT

DESIGNED BY: RPR
DATE: 02-06-2012
DRAWN BY: SES
SUBMITTED BY: TETRA TECH
CHECKED BY: RSM
FILE NO.: AF1202$-ST001GN

TETRA TECH

US Army Corps of Engineers
Middle East District

COMMAND & CONTROL FACILITY
KANDAHAR AIR FIELD, AFGHANISTAN
STANDARD DRAWINGS
GENERAL NOTES, SYMBOLS AND ABBREVIATIONS

SHEET REFERENCE NUMBER:
$
ST-001

W:\23308\127-23308-11004\CAD\MED Drawings\AF1202\Standards\Telecommunications\AF1202$-ST001GN.dwg 3/7/2012 10:23:39 AM Jeffers, Scott

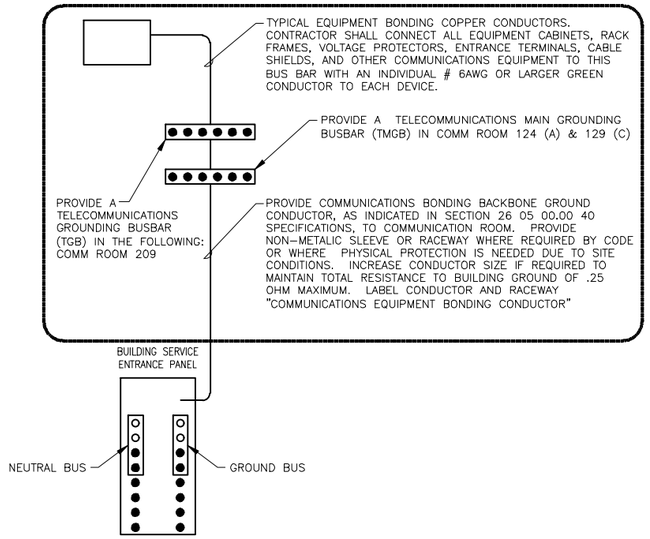

ELECTRICAL SYSTEM AND ANSI J-STD-607-A COMMUNICATIONS GROUNDING AND BONDING

N.T.S.

3 VARIOUS | ST-500

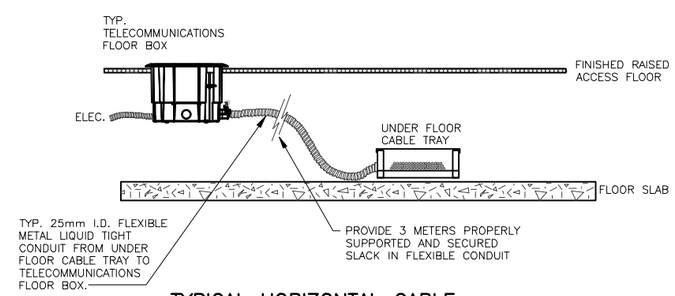

TYPICAL HORIZONTAL CABLE DISTRIBUTION DETAIL

N.T.S.

2 VARIOUS | ST-500

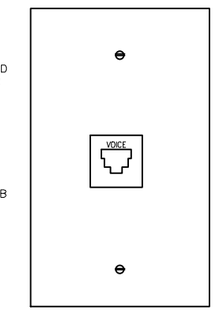

OUTLET TYPE

N.T.S.

1 VARIOUS | ST-500

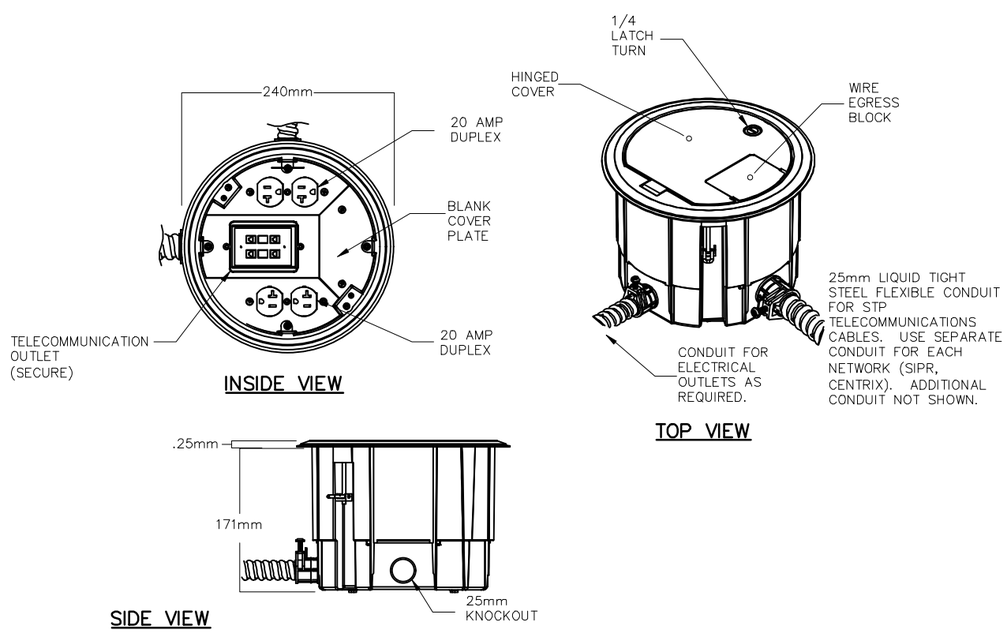

COMBINATION ELECTRICAL/TELECOMMUNICATIONS OUTLET BOX FOR RAISED FLOOR, CENTRIX AND SIPRNET

N.T.S.

5 VARIOUS | ST-500

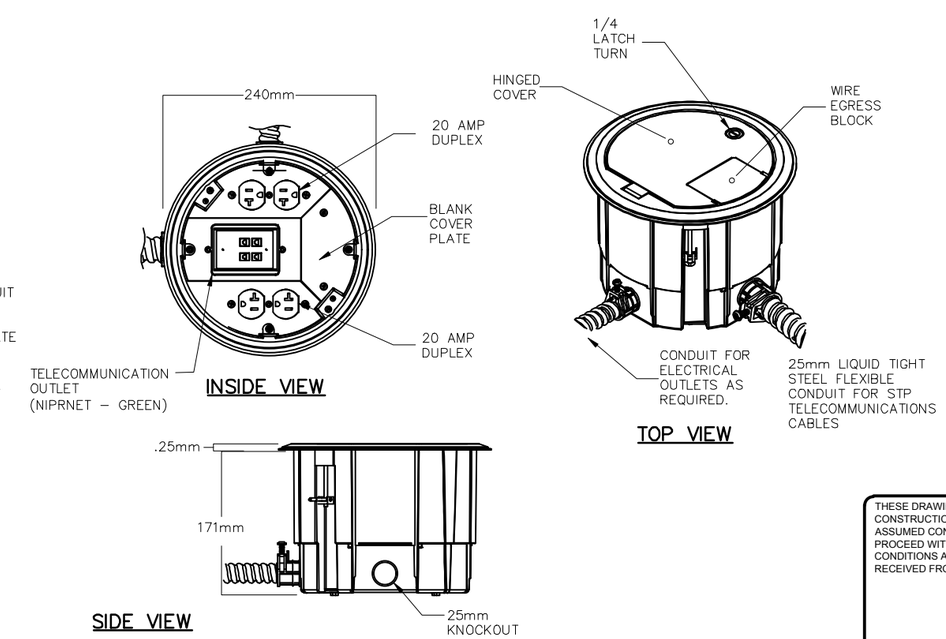

COMBINATION ELECTRICAL/TELECOMMUNICATIONS OUTLET BOX FOR RAISED FLOOR, NIPRNET

N.T.S.

4 VARIOUS | ST-500

THESE DRAWINGS ARE "NOT APPROVED FOR CONSTRUCTION" SINCE THESE ARE BASED UPON ASSUMED CONDITIONS. THE CONTRACTOR SHALL NOT PROCEED WITH CONSTRUCTION UNTIL THE ASSUMED CONDITIONS ARE VALIDATED AND APPROVAL IS RECEIVED FROM THE CONTRACTING OFFICER.

STATE OF NEW YORK · KEVIN CHARLES TERRY · 073092 · LICENSED PROFESSIONAL ENGINEER

2/6/2012

UNLESS OTHERWISE NOTED, LINEAR DIMENSIONS SHOWN ARE IN MILLIMETERS.

DESIGN COMPLETE SUBMITTAL

SYMB	DESCRIPTION	DATE	APR
FNL	DESIGN COMPLETE SUBMITTAL	02-06-12	KCT

DESIGNED BY: RPR | DATE: 02-06-2012
DRAWN BY: SES | SUBMITTED BY: TETRA TECH
CHECKED BY: RSM | FILE NO.: AF1202$-ST500DT

TETRA TECH

US Army Corps of Engineers Middle East District

COMMAND & CONTROL FACILITY
KANDAHAR AIR FIELD, AFGHANISTAN
STANDARD DRAWINGS
GENERAL DETAILS

SHEET REFERENCE NUMBER: $ ST-500

W:\23308\127-23308-11004\CAD\MED Drawings\AF1202\Standards\Telecommunications\AF1202$-ST500DT.dwg 3/7/2012 10:23:57 AM Jeffers, Scott

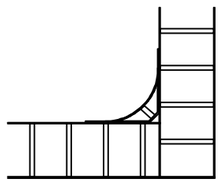

TYPICAL CABLE LADDER RACK 90 DEGREE TURN (6) VARIOUS | ST-501
N.T.S.

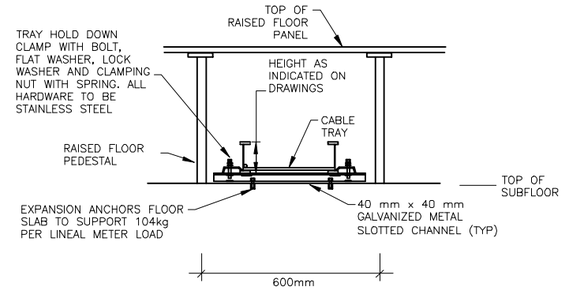

UNDER RAISED FLOOR CABLE TRAY SUPPORT (2) VARIOUS | ST-501
N.T.S.

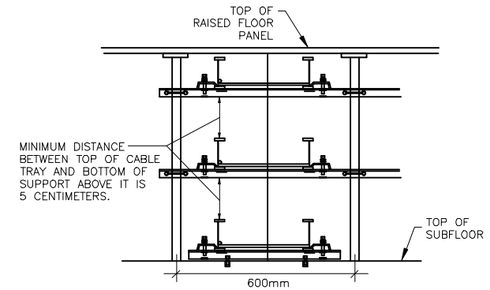

UNDER RAISED FLOOR CABLE TRAY SUPPORT –STACKED TRAY SECTION (1b) VARIOUS | ST-501
N.T.S.

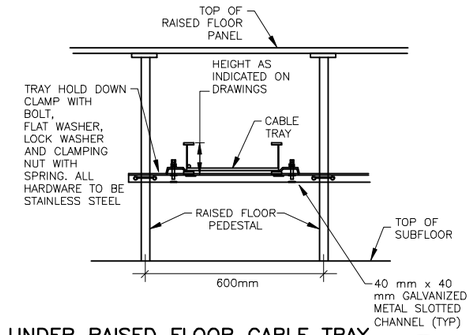

UNDER RAISED FLOOR CABLE TRAY SUPPORT – ELEVATED TRAY SECTION (1a) VARIOUS | ST-501
N.T.S.

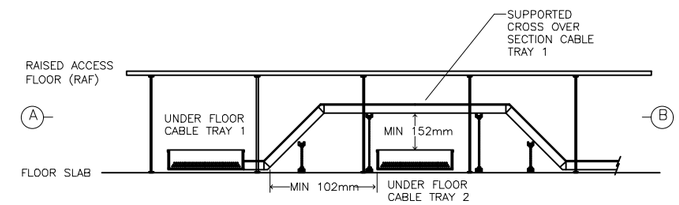

SECTIONAL VIEW

NOTE:

WHEN CROSSING CABLE TRAYS, USE THE FOLLOWING ORDER:

NIPRNET SHALL CROSS OVER SIPRNET, CENTRIX AND JWICS;

CENTRIX SHALL CROSS OVER SIPRNET AND JWICS;

SIPRNET SHALL CROSS OVER JWICS.

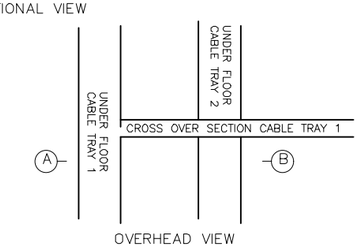

OVERHEAD VIEW

TYPICAL CABLE TRAY CROSSOVER – UNDER RAISED ACCESS FLOOR (3) VARIOUS | ST-501
N.T.S.

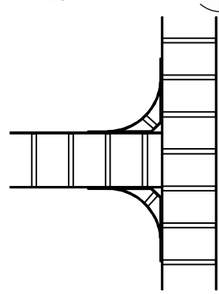

TYPICAL LADDER RACK TEE INTERSECTION (7) VARIOUS | ST-501
N.T.S.

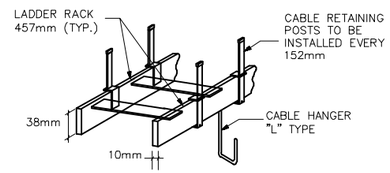

CABLE LADDER RACK DETAIL TELECOMMUNICATIONS ROOMS (5) VARIOUS | ST-501
N.T.S.

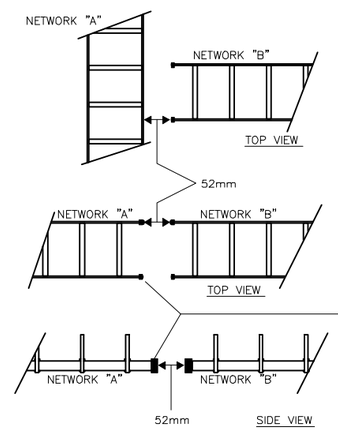

CABLE TRAYS AND OTHER RACEWAYS FOR DIFFERENTLY CLASSED NETWORKS (ex. NIPRNET (A) AND SIPRNET (B) OR CENTRIX (A) AND JWICS (B), ETC.) MUST MAINTAIN MINIMUM SEPARATION OF 52mm.

TYP. ALL CABLE TRAY OR RACEWAY ENDS MUST BE FREE OF BURRS OR EXPOSED EDGES AND BE FINISHED WITH BUSHINGS OR OTHER MANUFACTURER RECCOMMENDED MATERIALS OR FITTINGS.

MINIMUM RACEWAY SEPARATION (4) VARIOUS | ST-501
N.T.S.

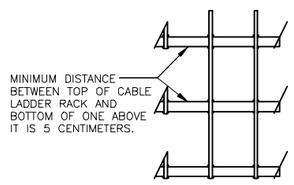

LADDER RACK STACKED SECTION (10) VARIOUS | ST-501
N.T.S.

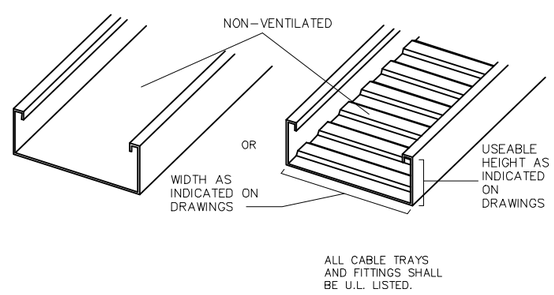

SOLID BOTTOM TELECOMMUNICATIONS CABLE TRAYS (9) VARIOUS | ST-501
N.T.S.

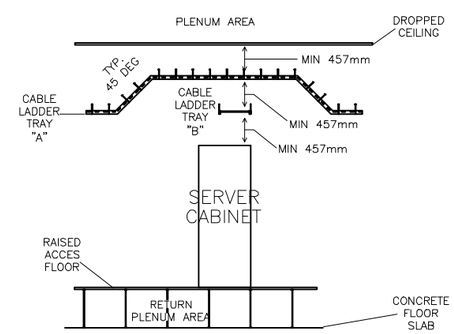

TYPICAL OVERHEAD CABLE TRAY CROSSOVER – SERVER ROOM (8) VARIOUS | ST-501
N.T.S.

THESE DRAWINGS ARE "NOT APPROVED FOR CONSTRUCTION" SINCE THESE ARE BASED UPON ASSUMED CONDITIONS. THE CONTRACTOR SHALL NOT PROCEED WITH CONSTRUCTION UNTIL THE ASSUMED CONDITIONS ARE VALIDATED AND APPROVAL IS RECEIVED FROM THE CONTRACTING OFFICER.

STATE OF NEW YORK · KEVIN CHARLES TERRY · 079095 · LICENSED PROFESSIONAL ENGINEER
2/16/2012

UNLESS OTHERWISE NOTED, LINEAR DIMENSIONS SHOWN ARE IN METERS.

DESIGN COMPLETE SUBMITTAL

SYMB	DESCRIPTION	DATE	APR
FNL	DESIGN COMPLETE SUBMITTAL	02-06-12	KCT

DESIGNED BY: RPR
DATE: 02-06-2012
DRAWN BY: SES
SUBMITTED BY: TETRA TECH
CHECKED BY: RSM
FILE NO.: AF1202$-ST501DT

TETRA TECH

US Army Corps of Engineers Middle East District

COMMAND & CONTROL FACILITY
KANDAHAR AIR FIELD, AFGHANISTAN
STANDARD DRAWINGS
GENERAL DETAILS

SHEET REFERENCE NUMBER: $
ST-501

W:\23308\127-23308-11004\CAD\MED Drawings\AF1202\Standards\Telecommunications\AF1202$-ST501DT.dwg 3/7/2012 10:24:15 AM Jeffers, Scott

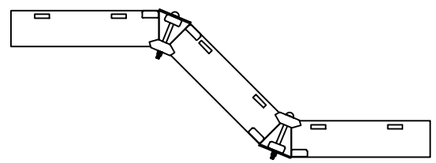

TYPICAL CABLE LADDER RACK ELEVATION RISER (3)
N.T.S. VARIOUS | ST-502

CONDUITS MUST BE SECURELY FASTENED TO CABLE TRAY USING APPROVED FITTINGS. CONDUIT ENDS MUST BE REAMED AND PLASTIC BUSHING PROVIDED.

PROVIDE GROUNDING BONDS ON ALL CONDUITS PER NFPA-70

PROVIDE GROUNDING BONDS ON ALL CONDUITS PER NFPA-70

SUPPORT CONDUITS FROM CABLE TRAY WITH APPROVED FITTINGS.

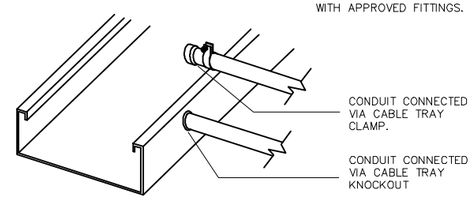

CONDUIT CONNECTION TO CABLE TRAY (2)
N.T.S. VARIOUS | ST-502

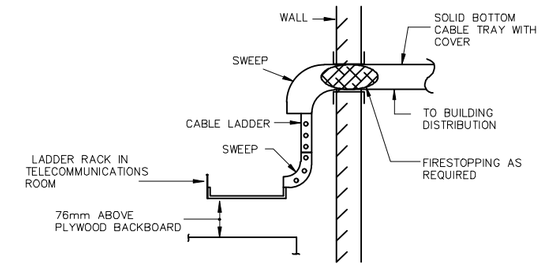

PROVIDE CABLE TRAY TRANSITION FOR EACH NON-SECURE CABLE TRAY AND THE SIPRNET CABLE TRAY AT THE POINT OF EXIT FROM THE COMMUNICATIONS ROOM. COORDINATE WITH ALL OTHER DISCIPLINES TO AVOID CONFLICTS IN THE ROUTING OF THE CABLE TRAYS.

ALL WALL PENETRATIONS MUST BE SEALED, FINISHED, AND FIRESTOPPED AS REQUIRED. PENETRATIONS OF FIRE-RATED PARTITIONS, WALLS OR FLOORS BY TELECOMMUNICATIONS PATHWAYS OR WIRING SHALL BE THROUGH MODULAR, RE-ENTERABLE FIRESTOPPING DEVICE(S) CONTAINING SELF-SEALING INTUMESCENT INSERTS.

CABLE TRAY TRANSITION (1)
N.T.S. VARIOUS | ST-502

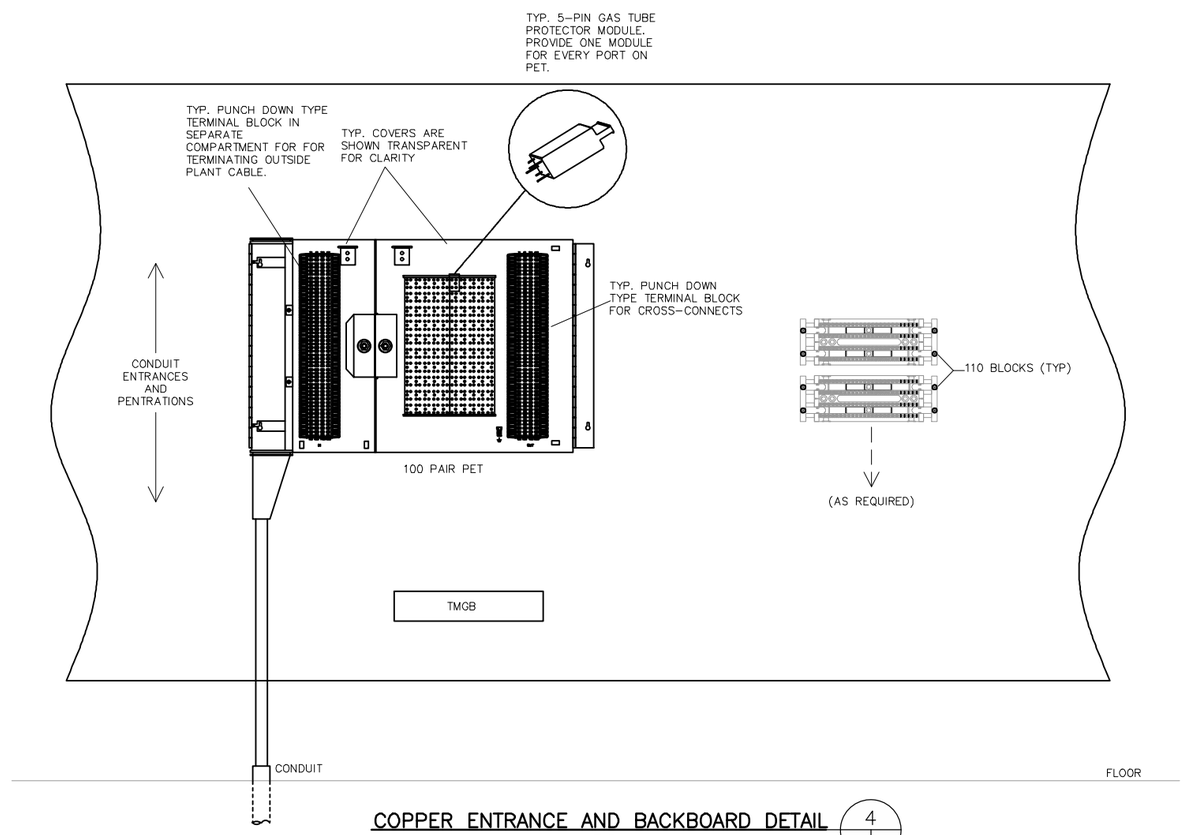

COPPER ENTRANCE AND BACKBOARD DETAIL (4)
N.T.S. VARIOUS | ST-502

THESE DRAWINGS ARE "NOT APPROVED FOR CONSTRUCTION" SINCE THESE ARE BASED UPON ASSUMED CONDITIONS. THE CONTRACTOR SHALL NOT PROCEED WITH CONSTRUCTION UNTIL THE ASSUMED CONDITIONS ARE VALIDATED AND APPROVAL IS RECEIVED FROM THE CONTRACTING OFFICER.

STATE OF NEW YORK · KEVIN CHARLES TERRY · 073092 · LICENSED PROFESSIONAL ENGINEER
2/6/2012

UNLESS OTHERWISE NOTED, LINEAR DIMENSIONS SHOWN ARE IN METERS.

DESIGN COMPLETE SUBMITTAL

SYMB	DESCRIPTION	DATE	APR
FNL	DESIGN COMPLETE SUBMITTAL	02-06-12	KCT

DESIGNED BY: RPR
DATE: 02-06-2012
DRAWN BY: SES
SUBMITTED BY: TETRA TECH
CHECKED BY: RSM
FILE NO.: AF1202$-ST502DT

TETRA TECH

US Army Corps of Engineers Middle East District

COMMAND & CONTROL FACILITY
KANDAHAR AIR FIELD, AFGHANISTAN
STANDARD DRAWINGS
GENERAL DETAILS

SHEET REFERENCE NUMBER: $
ST-502

W:\23308\127-23308-11004\CAD\MED Drawings\AF1202\Standards\Telecommunications\AF1202$-ST502DT.dwg 3/7/2012 10:24:34 AM Jeffers, Scott

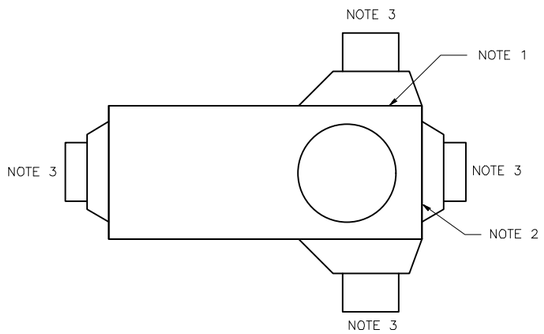

NOTE 1. SIDE WINDOW RECESS TO BE 203mm.

NOTE 2. END WALL WINDOW RECESS TO BE 76mm.

NOTE 3. STUB OUT CONDUITS 2 METERS IN ANY MANHOLE DUCT WINDOWS THAT DO NOT HAVE DUCT CONNECTIONS.

TYPICAL MANHOLETYPE J4

N.T.S.

3 VARIOUS ST-503

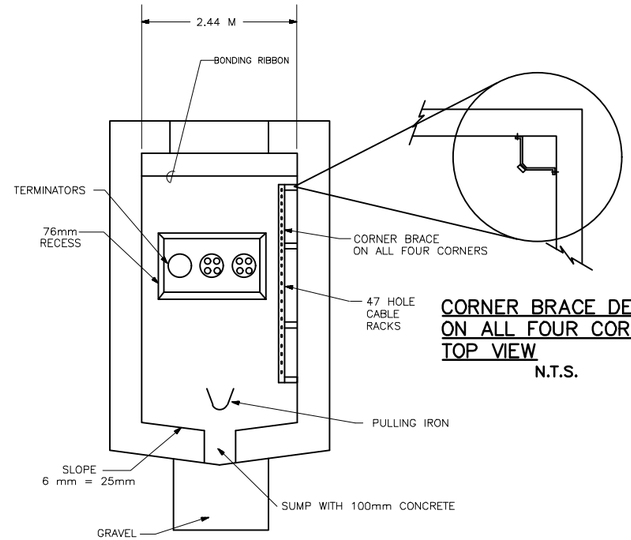

CORNER BRACE DETAILS ON ALL FOUR CORNERS TOP VIEW

N.T.S.

MANHOLE CABLE RACK INSTALLATION END VIEW

N.T.S.

2 VARIOUS ST-503

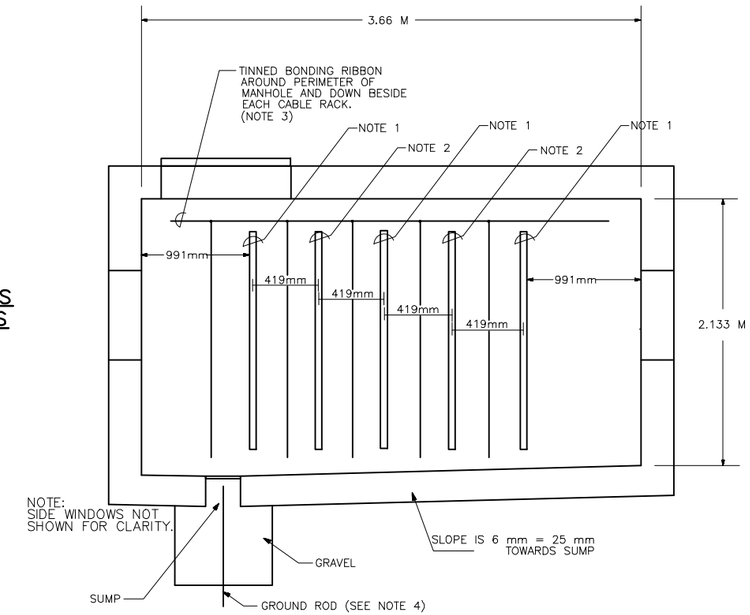

NOTES

NOTE 1. 47 HOLE CABLE RACK MOUNTED ON STAND OFF BRACKET.

NOTE 2. 47 HOLE CABLE RACK MOUNTED DIRECTLY TO THE WALL.

NOTE 3. BONDING RIBBON TO BE 1.6mm THICK, 9.5mm WIDE, TINNED COPPER.

NOTE 4. GROUND ROD TO BE 20mm IN DIAMETER, 3 METERS LONG COPPER CLAD STEEL GROUND ROD CAN BE INSTALLED IN SUMP OR OUTSIDE THE MANHOLE AND A #6 COPPER WIRE BROUGHT IN VIA A WATER TIGHT SLEEVE. GROUND WIRE, #6 COPPER TO BE EXOTHERMIC WELDED TO GROUND ROD AND CONNECTED TO BONDING RIBBON VIA A PROPER CLAMP, GROUND RESISTANCE TO BE A MAXIMUM 25 OHMS.

3.66M MANHOLE CABLE RACK INSTALLATION SIDE VIEW

N.T.S.

1 VARIOUS ST-503

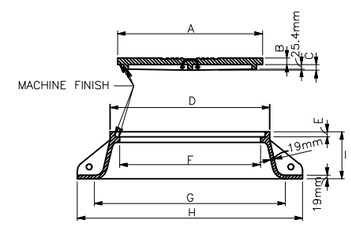

PROVIDE A SECURE LOCKING LID SIMILAR TO THOSE BY MANUFACTURER LOCK DOWN SOLUTIONS.

	A	B	C	D	E	F	G	H	I
MANHOLE	809.6	50.8	82.6	812.8	50.8	762	1041.4	1244.6	254

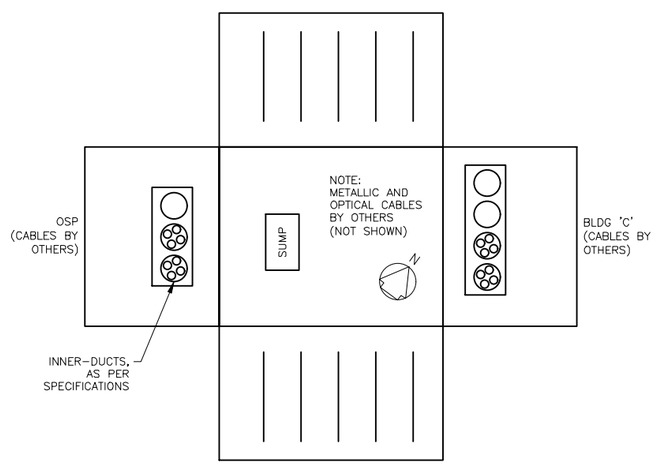

MANHOLE LAYOUTS, BUTTERFLY DRAWINGS

N.T.S.

6 VARIOUS ST-503

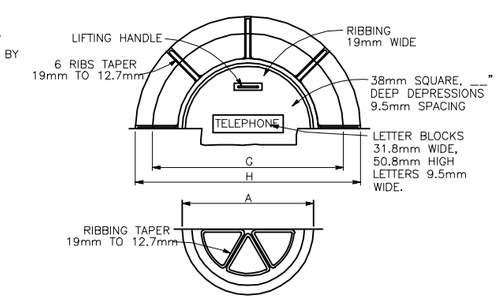

TYPE "B" MANHOLE FRAME AND COVER DETAILS

N.T.S.

5 VARIOUS ST-503

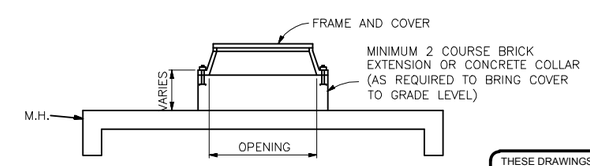

MANHOLE NECK DETAIL

N.T.S.

4 VARIOUS ST-503

THESE DRAWINGS ARE "NOT APPROVED FOR CONSTRUCTION" SINCE THESE ARE BASED UPON ASSUMED CONDITIONS. THE CONTRACTOR SHALL NOT PROCEED WITH CONSTRUCTION UNTIL THE ASSUMED CONDITIONS ARE VALIDATED AND APPROVAL IS RECEIVED FROM THE CONTRACTING OFFICER.

STATE OF NEW YORK · KEVIN CHARLES TERRY · 073093 · LICENSED PROFESSIONAL ENGINEER

2/6/2012

UNLESS OTHERWISE NOTED, LINEAR DIMENSIONS SHOWN ARE IN MILLIMETERS.

DESIGN COMPLETE SUBMITTAL

SYMB	DESCRIPTION	DATE	APR
FNL	DESIGN COMPLETE SUBMITTAL	02-06-12	KCT

DESIGNED BY: RPR
DRAWN BY: SES
CHECKED BY: RSM
DATE: 02-06-2012
SUBMITTED BY: TETRA TECH
FILE NO.: AF1202$-ST503DT

TETRA TECH

US Army Corps of Engineers Middle East District

COMMAND & CONTROL FACILITY
KANDAHAR AIR FIELD, AFGHANISTAN
STANDARD DRAWINGS
GENERAL DETAILS

SHEET REFERENCE NUMBER:
$
ST-503

W:\23308\127-23308-11004\CAD\MED Drawings\AF1202\Standards\Telecommunications\AF1202$-ST503DT.dwg 3/7/2012 10:24:51 AM Jeffers, Scott

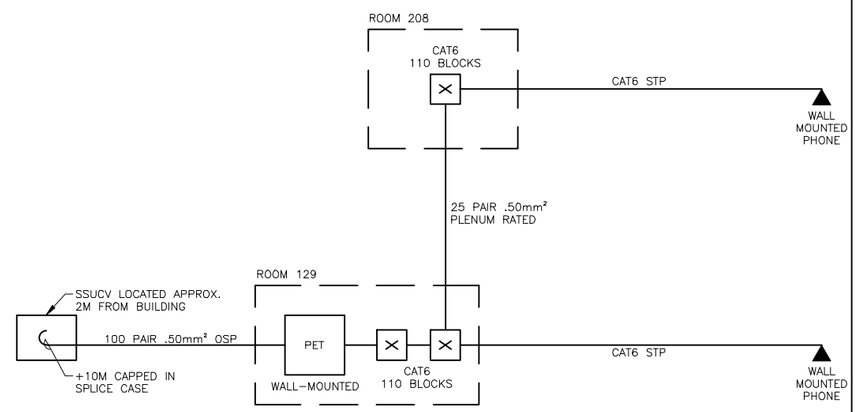

COMMAND AND CONTROL CENTER (BUILDING C)
COPPER CABLE RISER DIAGRAM
N.T.S.

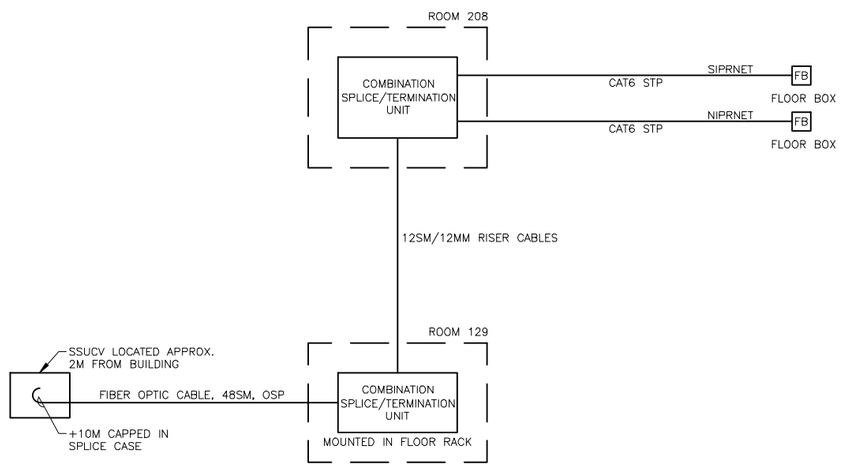

COMMAND AND CONTROL CENTER (BUILDING C)
FIBER OPTIC CABLE RISER DIAGRAM
N.T.S.

THESE DRAWINGS ARE "NOT APPROVED FOR CONSTRUCTION" SINCE THESE ARE BASED UPON ASSUMED CONDITIONS. THE CONTRACTOR SHALL NOT PROCEED WITH CONSTRUCTION UNTIL THE ASSUMED CONDITIONS ARE VALIDATED AND APPROVAL IS RECEIVED FROM THE CONTRACTING OFFICER.

STATE OF NEW YORK
KEVIN CHARLES TERRY
073093
LICENSED PROFESSIONAL ENGINEER
2/6/2012

UNLESS OTHERWISE NOTED, LINEAR DIMENSIONS SHOWN ARE IN MILLIMETERS.

DESIGN COMPLETE SUBMITTAL

SYMB	DESCRIPTION	DATE	APR
FNL	DESIGN COMPLETE SUBMITTAL	02-06-12	KCT

DESIGNED BY: RPR
DATE: 02-06-2012
DRAWN BY: SES
SUBMITTED BY: TETRA TECH
CHECKED BY: RSM
FILE NO.: AF1202$-ST700DI

TETRA TECH

US Army Corps of Engineers
Middle East District

COMMAND & CONTROL FACILITY
KANDAHAR AIR FIELD, AFGHANISTAN
STANDARD DRAWINGS
RISER DIAGRAMS

SHEET REFERENCE NUMBER:
$
ST-700

W:\23308\127-23308-11004\CAD\MED Drawings\AF1202\Standards\Telecommunications\AF1202$-ST700DI.dwg 3/7/2012 10:25:11 AM Jeffers, Scott