Notes

1– ALL DIMENSIONS ARE IN MM UNLESS OTHERWISE SPECIFIED.
2– ALL ELEVATIONS ARE IN MILLIMETER (MM) UNLESS OTHERWISE SPECIFIED
3– ALL WALLS ARE 200MM CMU WALL
4– EXTERIOR WALLS TO BE COLORED STUCCO

NOTE :

TOILETS ARE ORIENTED NORTH–SOUTH IF BUILDING ROTATES ON SITE, ROTATE TOILETS TO MAINTAIN NORTH, SOUTH ORIENTATION.

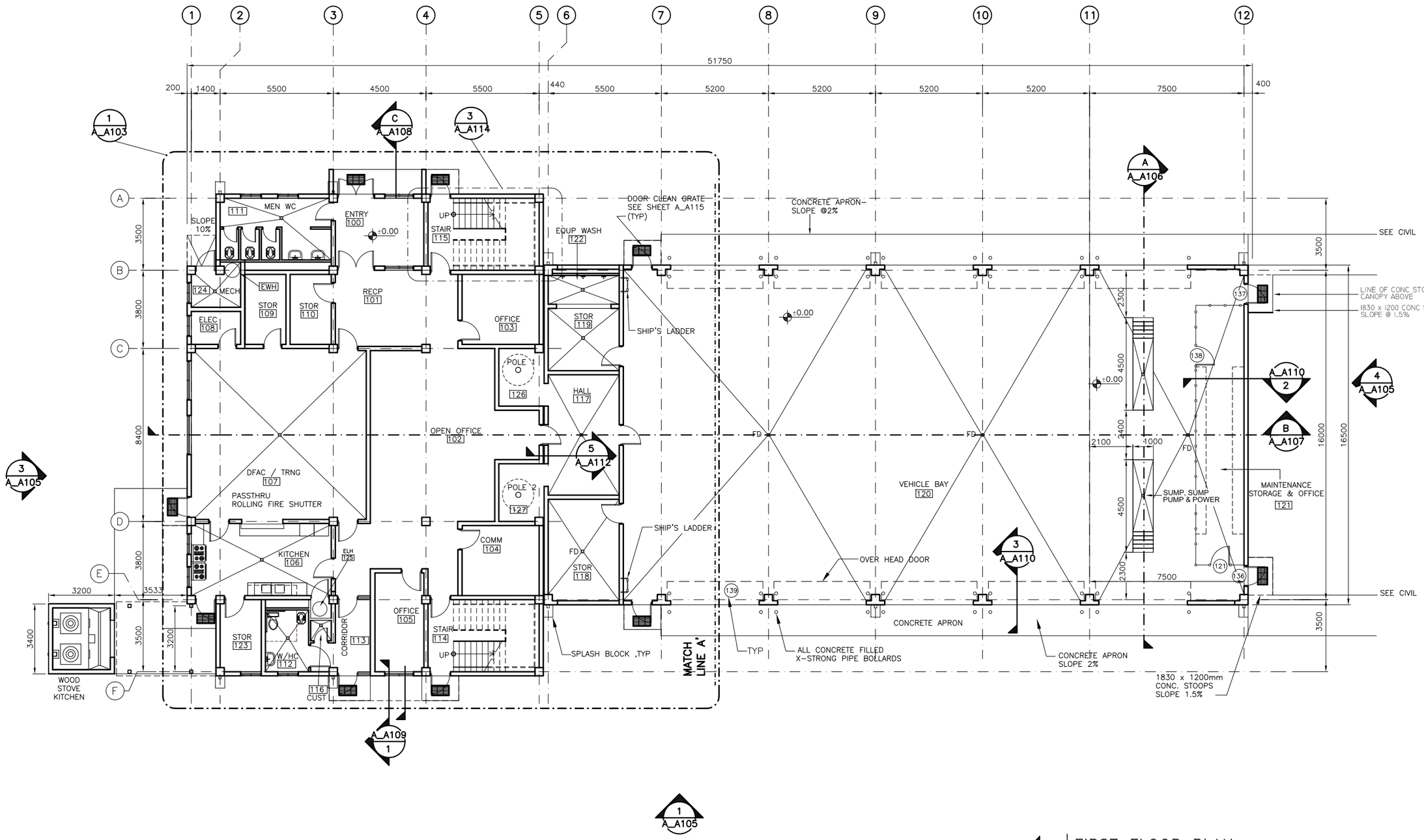

1 FIRST FLOOR PLAN
A_A100 SCALE: 1:100

1M 0 5M
SCALE 1:100

PRELIMINARY - NOT FOR CONSTRUCTION

REV	DATE	BY	SUB/APP	DESCRIPTION

DESIGNED T. LODGE
DRAWN ABDUL BASIR
CHECKED T. LODGE
IN CHARGE D. WHEELER
DATE 05 DEC 2009

AFGHAN NATIONAL SECURITY FORCE
Comprehensive Plan for Facilities Development

MINISTRY OF INTERIOR (MoI) - AFGHAN NATIONAL POLICE
PROVINCIAL FIRE STATION TYPE-B

First Floor Plan

SCALE AS SHOWN

PROJECT NO. AS SHOWN

A_A100

Notes

1– ALL DIMENSIONS ARE IN MM UNLESS OTHERWISE SPECIFIED.
2– ALL ELEVATIONS ARE IN MILLIMETER (MM) UNLESS OTHERWISE SPECIFIED
3– ALL WALLS ARE 200MM CMU WALL
4– EXTERIOR WALLS TO BE COLORED STUCCO

NOTE :

TOILETS ARE ORIENTED NORTH–SOUTH IF BUILDING ROTATES ON SITE, ROTATE TOILETS TO MAINTAIN NORTH, SOUTH ORIENTATION.

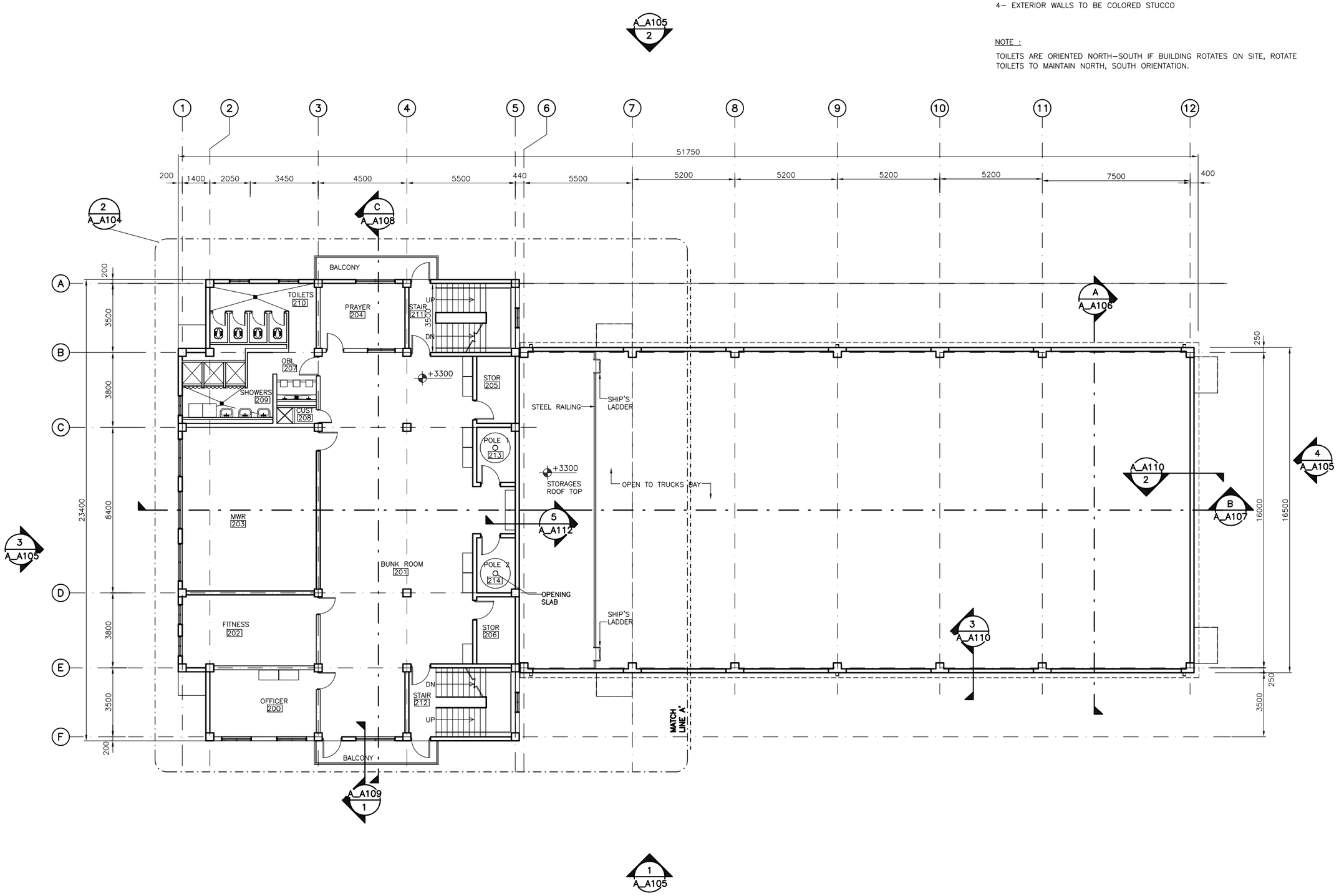

1 SECOND FLOOR PLAN

A_A101 SCALE: 1:100

1M 0 5M

SCALE 1:100

PRELIMINARY - NOT FOR CONSTRUCTION

AFGHAN NATIONAL SECURITY FORCE
Comprehensive Plan for Facilities Development

MINISTRY OF INTERIOR (MoI) - AFGHAN NATIONAL POLICE
PROVINCIAL FIRE STATION TYPE-B

Second Floor Plan

DESIGNED T. LODGE
DRAWN ABDUL BASIR
CHECKED T. LODGE
IN CHARGE D. WHEELER
DATE 05 DEC 2009

REV DATE BY SUB APP

SCALE AS SHOWN

PROJECT NO. AS SHOWN

A_A101

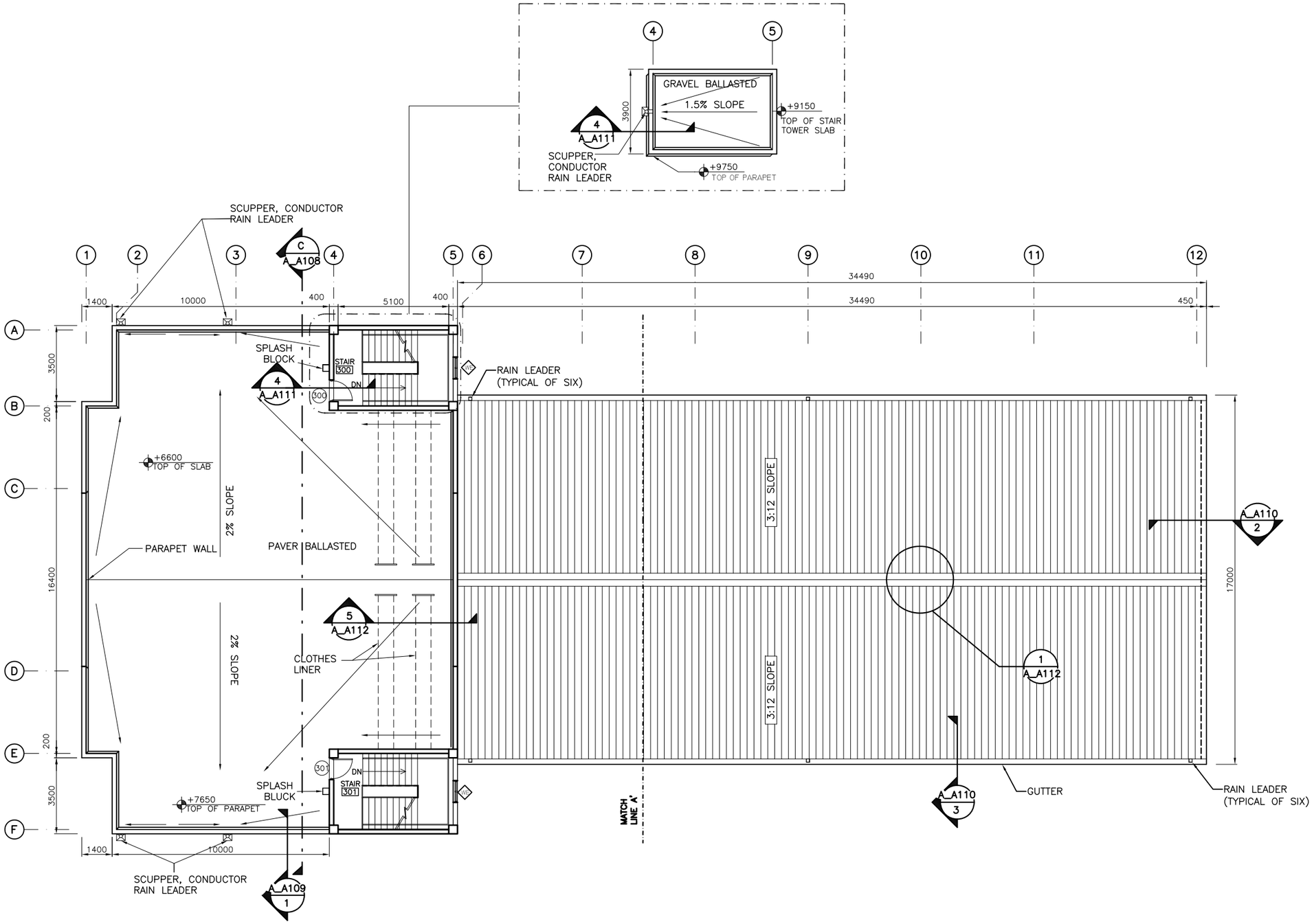

1 FIRE STATION ROOF PLAN

A_A102 SCALE: 1:100

1M 0 5M

SCALE 1:100

PRELIMINARY - NOT FOR CONSTRUCTION

REV	DATE	BY	SUB/APP	DESCRIPTION

DESIGNED T. LODGE
DRAWN ABDUL BASIR
CHECKED T. LODGE
IN CHARGE D. WHEELER
DATE 05 DEC 2009

AFGHAN NATIONAL SECURITY FORCE
Comprehensive Plan for Facilities Development

MINISTRY OF INTERIOR (MoI) - AFGHAN NATIONAL POLICE
PROVINCIAL FIRE STATION TYPE-B

Roof Plan

SCALE AS SHOWN

PROJECT NO. AS SHOWN

A_A102

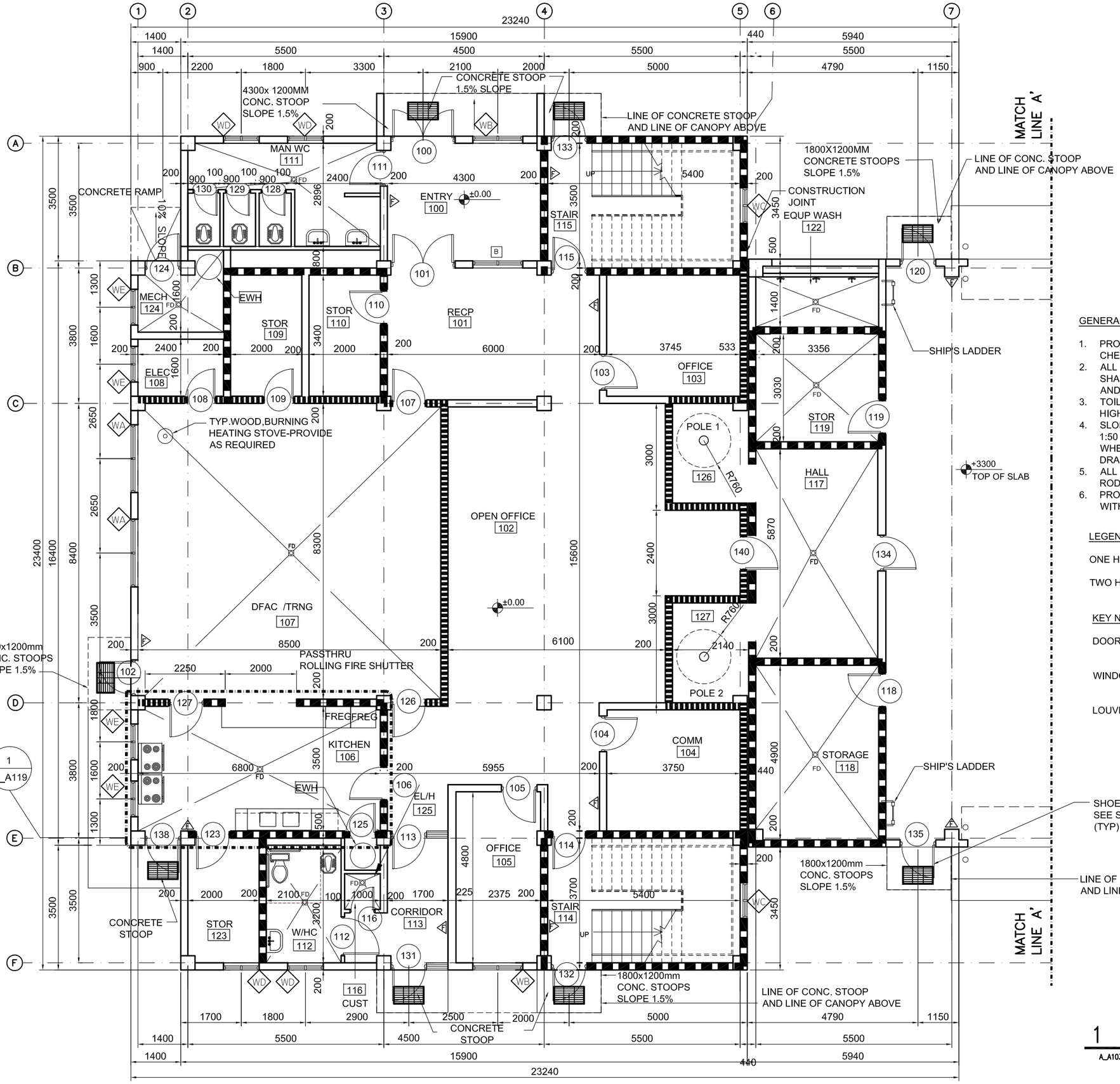

GENERAL NOTES:

1. PROVIDE PORTABLE FIRE EXTINGUISHERS,ABC DRY CHEMICAL 4A:60B;C SHOWN
2. ALL WALLS SHALL BE 200 MM THICK CMU MASONRY AND SHALL EXTEND TO THE BOTTOM OF STRUCTURE ABOVE AND CENTER ON COLUMNS UNLESS NOTED OTHERWISE.
3. TOILET AND SHOWER PARTITIONS SHALL BE 2000 MM HIGH AND 100MM THICK CMU WALL.
4. SLOPE FLOORS IN KITCHEN AND TOILET/SHOWER AREAS 1:50 MINIMUM TO TRENCH DRAINS AND FLOOR DRAINS WHERE INDICATED. SLOPE TRENCH DRAINS 1:50 TO DRAIN AT ONE
5. ALL SHOWER SHALL BE PROVIDED WITH CURTAINS RODS.
6. PROVIDE RAISED DOOR THRESHOLDS AT ALL ROOMS WITH WATERS TRIPPING

LEGEND:

ONE HOUR FIRE RATED WALL

TWO HOUR FIRE RATED WALL

KEY NOTE:

DOOR NUMBER

WINDOW NUMBER

LOUVER NUMBER

1 FIRST FLOOR ENLARGED PLAN

A_A103 SCALE: 1:50

.5M 0 2.5M

SCALE 1:50

PRELIMINARY - NOT FOR CONSTRUCTION

REV	DATE	BY	SUBAPP

DESCRIPTION

DESIGNED T. LODGE
DRAWN ABDUL BASIR
CHECKED T. LODGE
IN CHARGE D. WHEELER
DATE 05 DEC 2009

AFGHAN NATIONAL SECURITY FORCE
Comprehensive Plan for Facilities Development

MINISTRY OF INTERIOR (MoI) - AFGHAN NATIONAL POLICE
PROVINCIAL FIRE STATION TYPE-B

Enlarged Plan 1

SCALE AS SHOWN

PROJECT NO. AS SHOWN

A_A103

GENERAL NOTES:

1. PROVIDE PORTABLE FIRE EXTINGUISHERS,ABC DRY CHEMICAL 4A:60B;C SHOWN
2. ALL WALLS SHALL BE 200 MM THICK CMU MASONRY AND SHALL EXTEND TO THE BOTTOM OF STRUCTURE ABOVE AND CENTER ON COLUMNS UNLESS NOTED OTHERWISE.
3. TOILET AND SHOWER PARTITIONS SHALL BE 2000 MM HIGH AND 100MM THICK CMU WALL.
4. SLOPE FLOORS IN KITCHEN AND TOILET/SHOWER AREAS 1:50 MINIMUM TO TRENCH DRAINS AND FLOOR DRAINS WHERE INDICATED. SLOPE TRENCH DRAINS 1:50 TO DRAIN AT ONE
5. ALL SHOWER SHALL BE PROVIDED WITH CURTAINS RODS.
6. PROVIDE RAISED DOOR THRESHOLDS AT ALL ROOMS WITH WATERS TRIPPING

LEGEND:

ONE HOUR FIRE RATED WALL

TWO HOUR FIRE RATED WALL

KEY NOTE:

DOOR NUMBER (X)

WINDOW NUMBER (X)

LOUVER NUMBER (X)

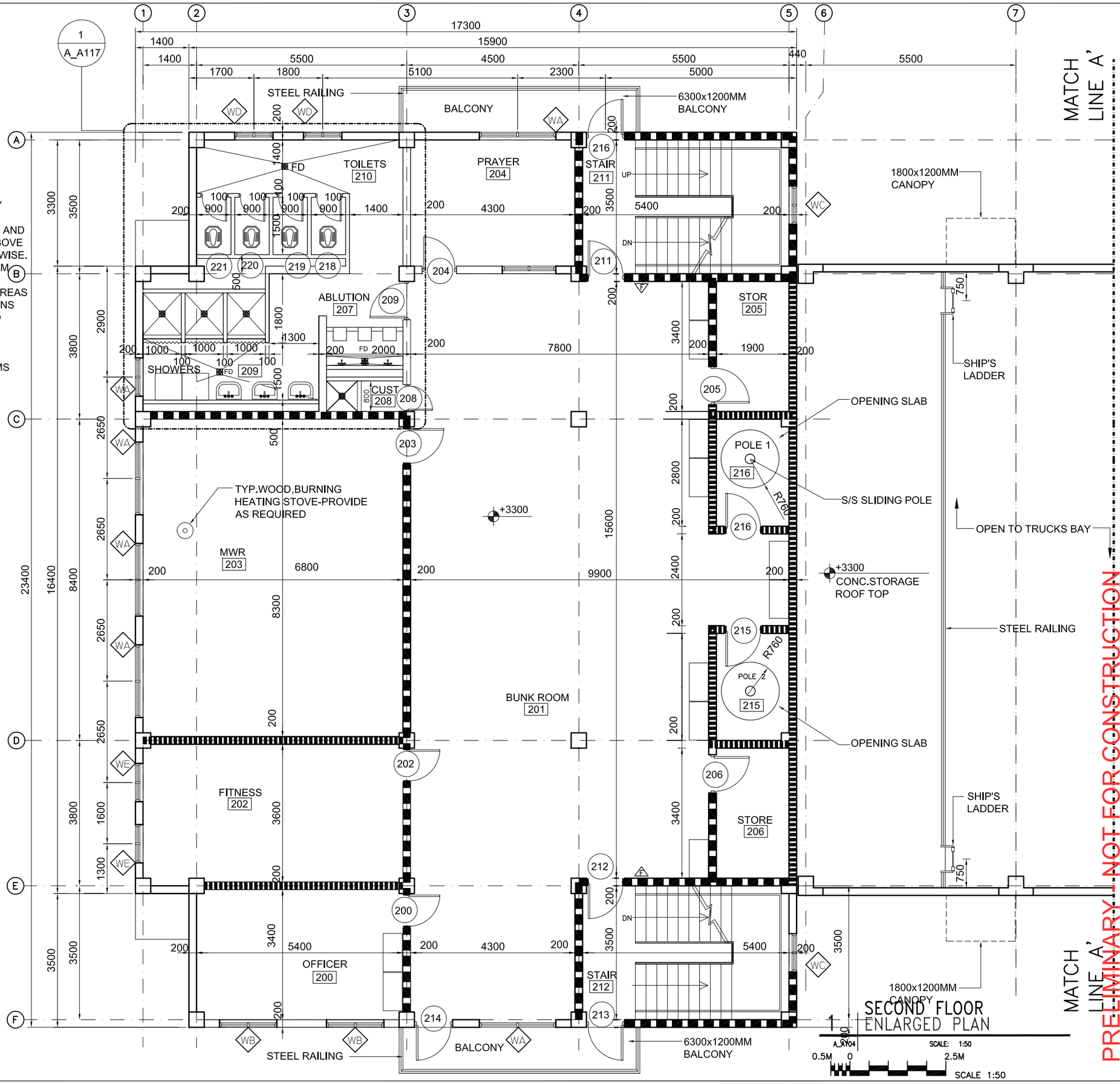

PRELIMINARY - NOT FOR CONSTRUCTION

REV	DATE	BY	SUB	APP	DESCRIPTION

DESIGNED T. LODGE
DRAWN ABDUL BASIR
CHECKED T. LODGE
IN CHARGE D. WHEELER
DATE 05 DEC 2009

AFGHAN NATIONAL SECURITY FORCE
Comprehensive Plan for Facilities Development
MINISTRY OF INTERIOR (MoI) - AFGHAN NATIONAL POLICE
PROVINCIAL FIRE STATION TYPE - B

Second Floor Enlarged Plan

SCALE AS SHOWN

PROJECT NO. AS SHOWN

A_A104

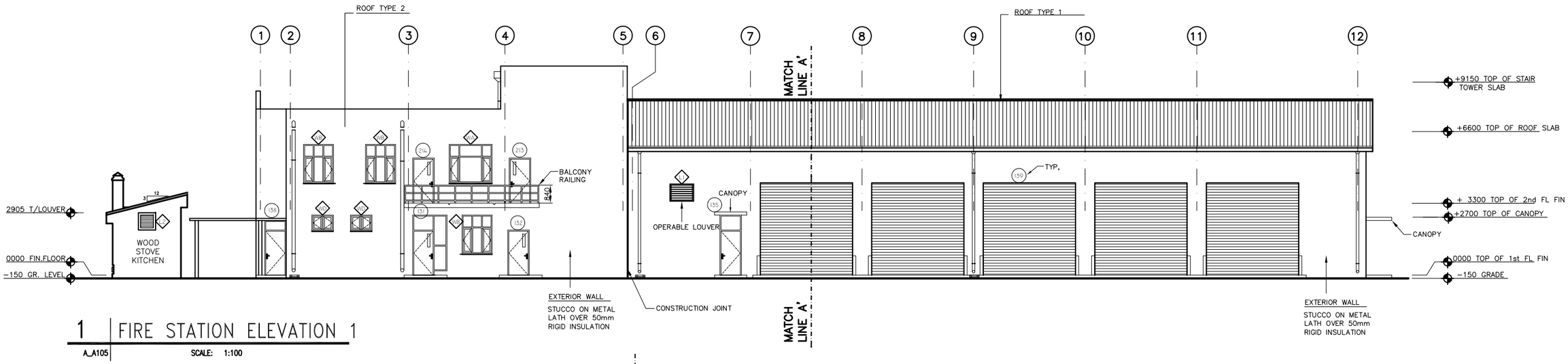

1 FIRE STATION ELEVATION 1

A_A105 SCALE: 1:100

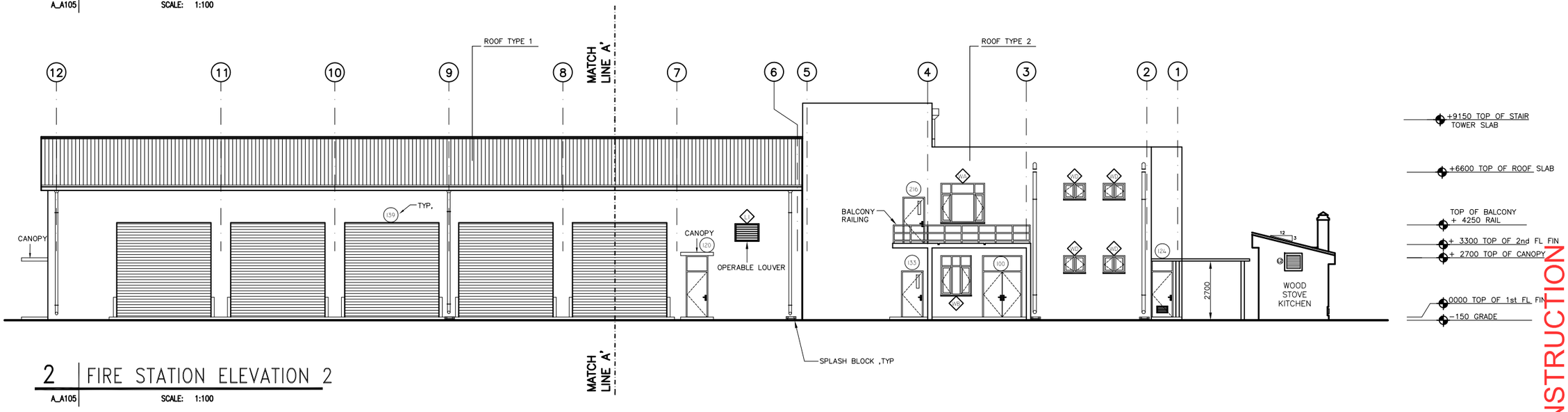

2 FIRE STATION ELEVATION 2

A_A105 SCALE: 1:100

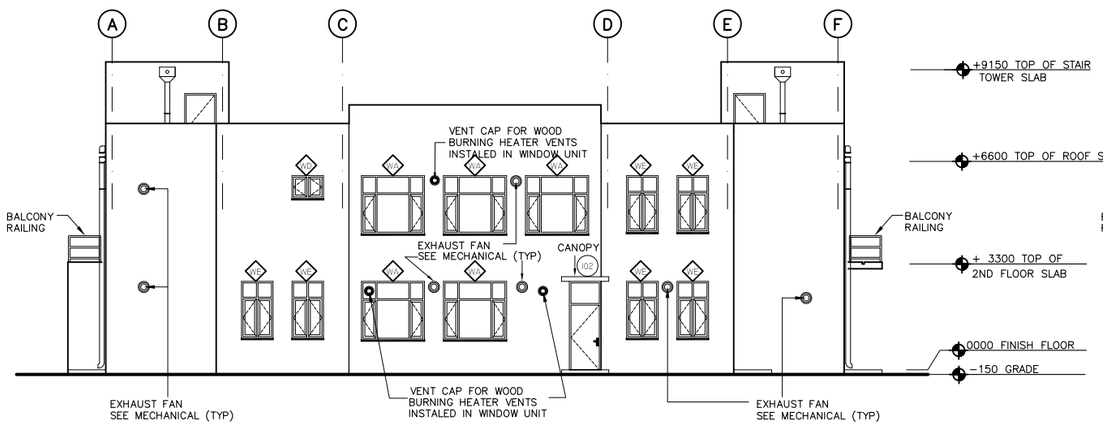

3 FIRE STATION ELEVATION 3

A_A105 SCALE: 1:100

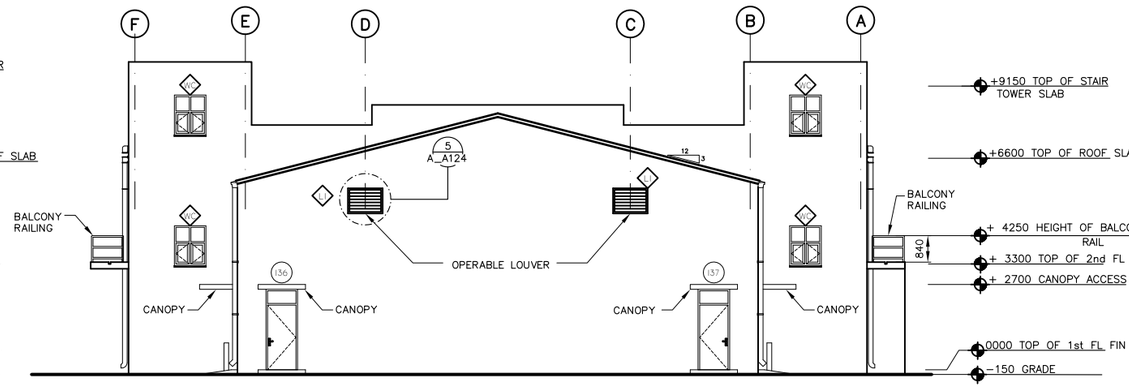

4 FIRE STATION ELEVATION 4

A_A105 SCALE: 1:100

1M 0 5M

SCALE 1:100

PRELIMINARY - NOT FOR CONSTRUCTION

AFGHAN NATIONAL SECURITY FORCE
Comprehensive Plan for Facilities Development

MINISTRY OF INTERIOR (MoI) - AFGHAN NATIONAL POLICE
PROVINCIAL FIRE STATION TYPE-B

Elevation 1,2,3,4

DESIGNED T. LODGE
DRAWN ABDUL BASIR
CHECKED T. LODGE
IN CHARGE D. WHEELER
DATE 05 DEC 2009

REV	DATE	BY	SUB/APP	DESCRIPTION

SCALE AS SHOWN

PROJECT NO. AS SHOWN

A_A105

N:\ANP FIRE STATIONS\~9929INTIAL_FSsA&B_091205\FSB_9929INTIAL_Drwgs\ACAD\A_A105 Fire station Building Elevations 1,2,3,4.dwg 01/28/2010 3:50pm CAD_9

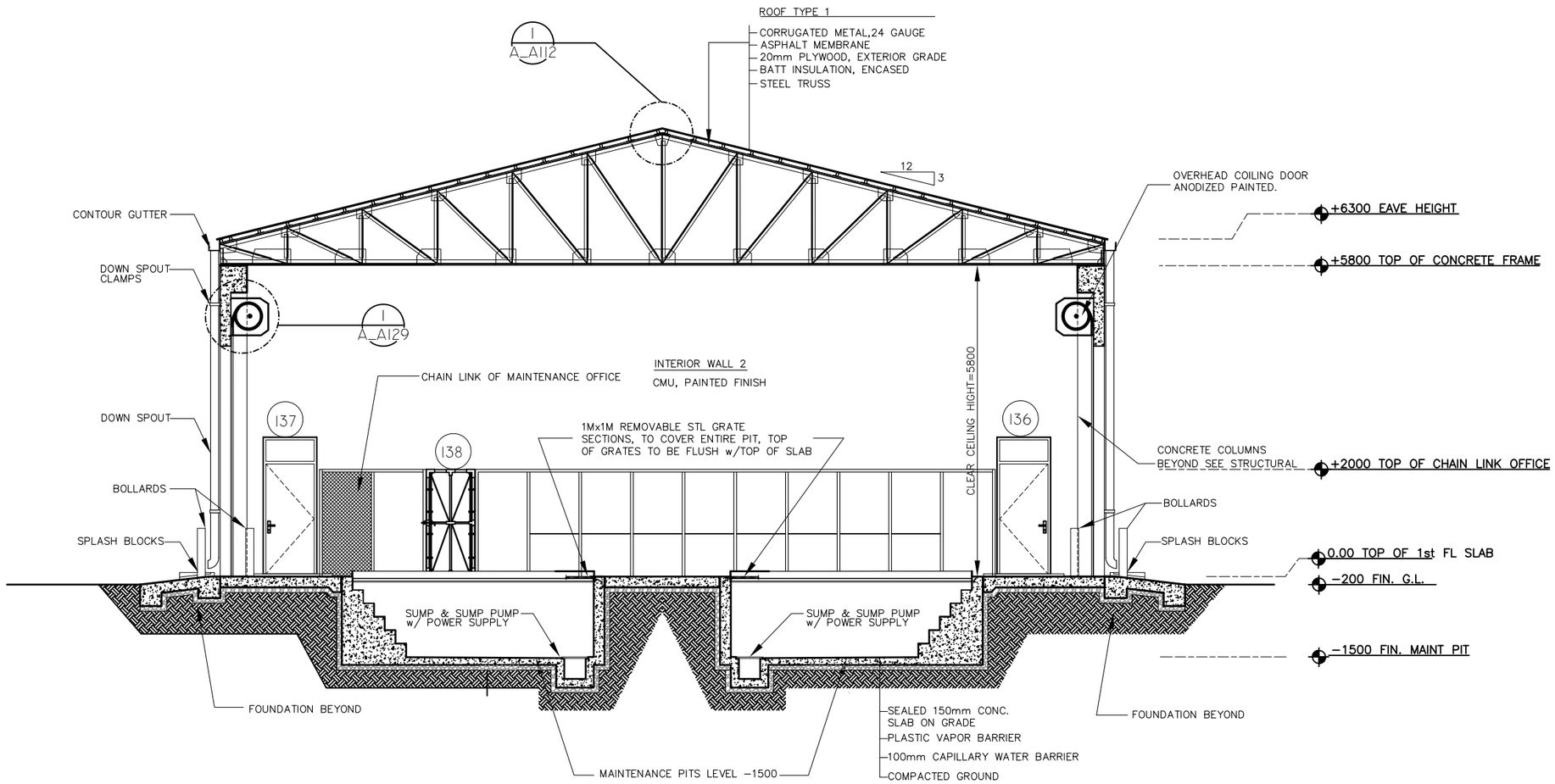

A | FIRE STATION SECTION A

A_A106 SCALE: 1:50

.5M 0 1 5M

SCALE 1:50

PRELIMINARY - NOT FOR CONSTRUCTION

REV	DATE	BY	SUB/APP	DESCRIPTION

DESIGNED T. LODGE
DRAWN ABDUL BASIR
CHECKED T. LODGE
IN CHARGE D. WHEELER
DATE 05 DEC 2009

AFGHAN NATIONAL SECURITY FORCE
Comprehensive Plan for Facilities Development

MINISTRY OF INTERIOR (MoI) - AFGHAN NATIONAL POLICE
PROVINCIAL FIRE STATION TYPE-B

Section A

SCALE AS SHOWN

PROJECT NO. AS SHOWN

A_A106

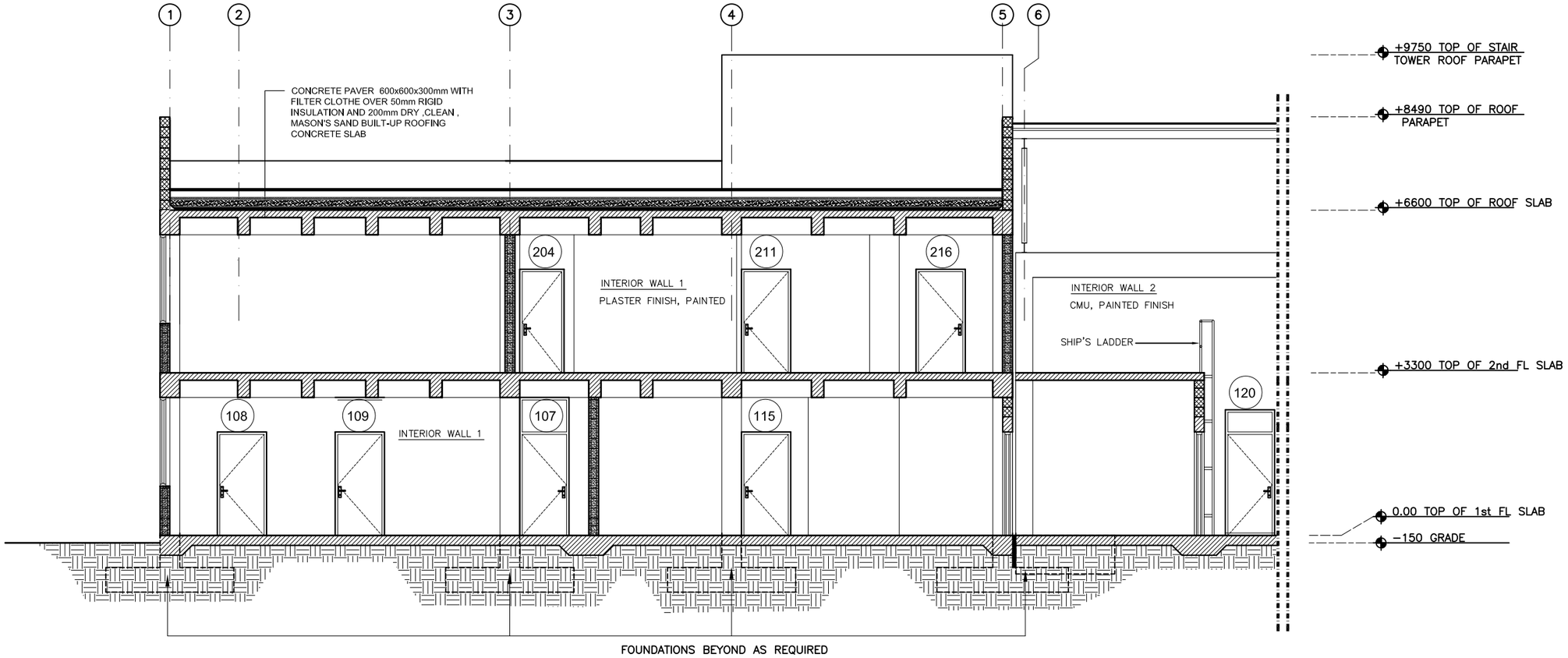

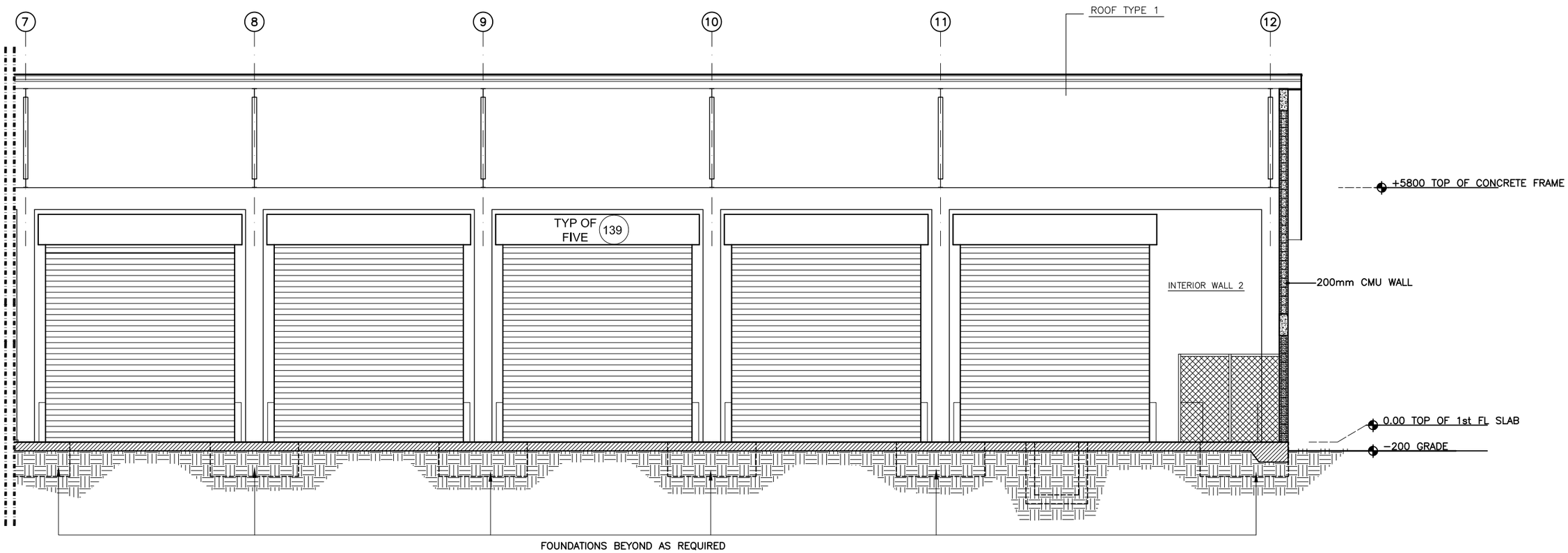

B | FIRE STATION SECTION B

A_A107 SCALE: 1:50

.5M 0 1 5M

SCALE 1:50

PRELIMINARY - NOT FOR CONSTRUCTION

REV	DATE	BY	SUB/APP	DESCRIPTION

DESIGNED T. LODGE
DRAWN ABDUL BASIR
CHECKED T. LODGE
IN CHARGE D. WHEELER
DATE 05 DEC 2009

AFGHAN NATIONAL SECURITY FORCE
Comprehensive Plan for Facilities Development

MINISTRY OF INTERIOR (MoI) - AFGHAN NATIONAL POLICE
PROVINCIAL FIRE STATION TYPE-B

Section B

SCALE AS SHOWN

PROJECT NO. AS SHOWN

A_A107

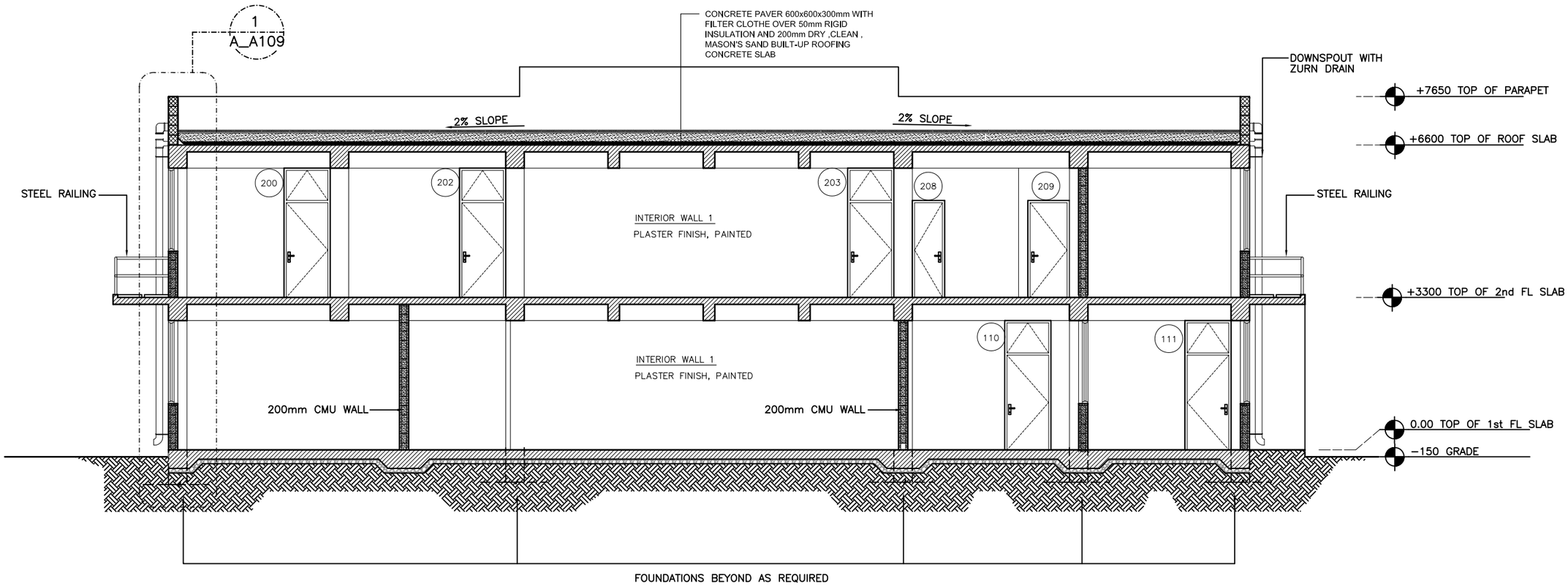

C | FIRE STATION SECTION C

A_A108 SCALE: 1:50

.5M 0 1 5M

SCALE 1:50

PRELIMINERY - NOT FOR CONSTRUCTION

DESCRIPTION	REV	DATE	BY	SUB	APP

DESIGNED T. LODGE
DRAWN ABDUL BASIR
CHECKED T. LODGE
IN CHARGE D. WHEELER
DATE 05 DEC 2009

AFGHAN NATIONAL SECURITY FORCE
Comprehensive Plan for Facilities Development

MINISTRY OF INTERIOR (MoI) - AFGHAN NATIONAL POLICE
PROVINCIAL FIRE STATION TYPE-B

Section C

SCALE AS SHOWN

PROJECT NO. AS SHOWN

A_A108

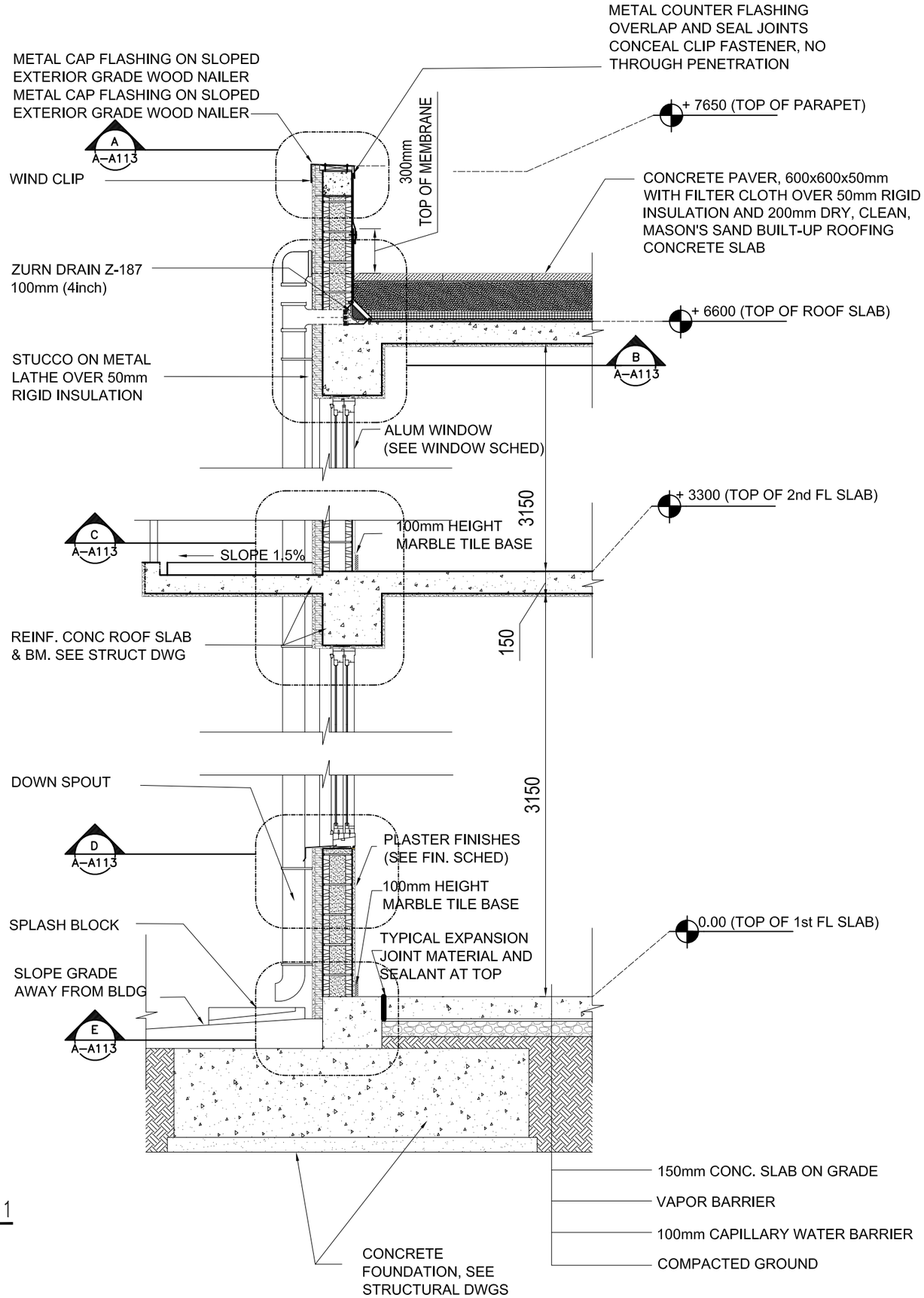

1 WALL SECTION –1

A_A109 SCALE: 1:16

© COPYRIGHT 2010 MACTEC

NOT FOR CONSTRUCTION / DESIGN DEVELOPMENT SUBMITTAL

REV	DATE	BY	SUB/APP	DESCRIPTION

DESIGNED T. LODGE
DRAWN WAHIDULLAH.Y
CHECKED P.HOPE
IN CHARGE D. WHEELER
DATE 05 DEC 2009

AFGHAN NATIONAL SECURITY FORCE
Comprehensive Plan for Facilities Development
MINISTRY OF INTERIOR (MoI) - AFGHAN NATIONAL POLICE
PROVINCIAL FIRE STATION TYPE - B

Wall Section

SCALE AS SHOWN

PROJECT NO. –

A_A109

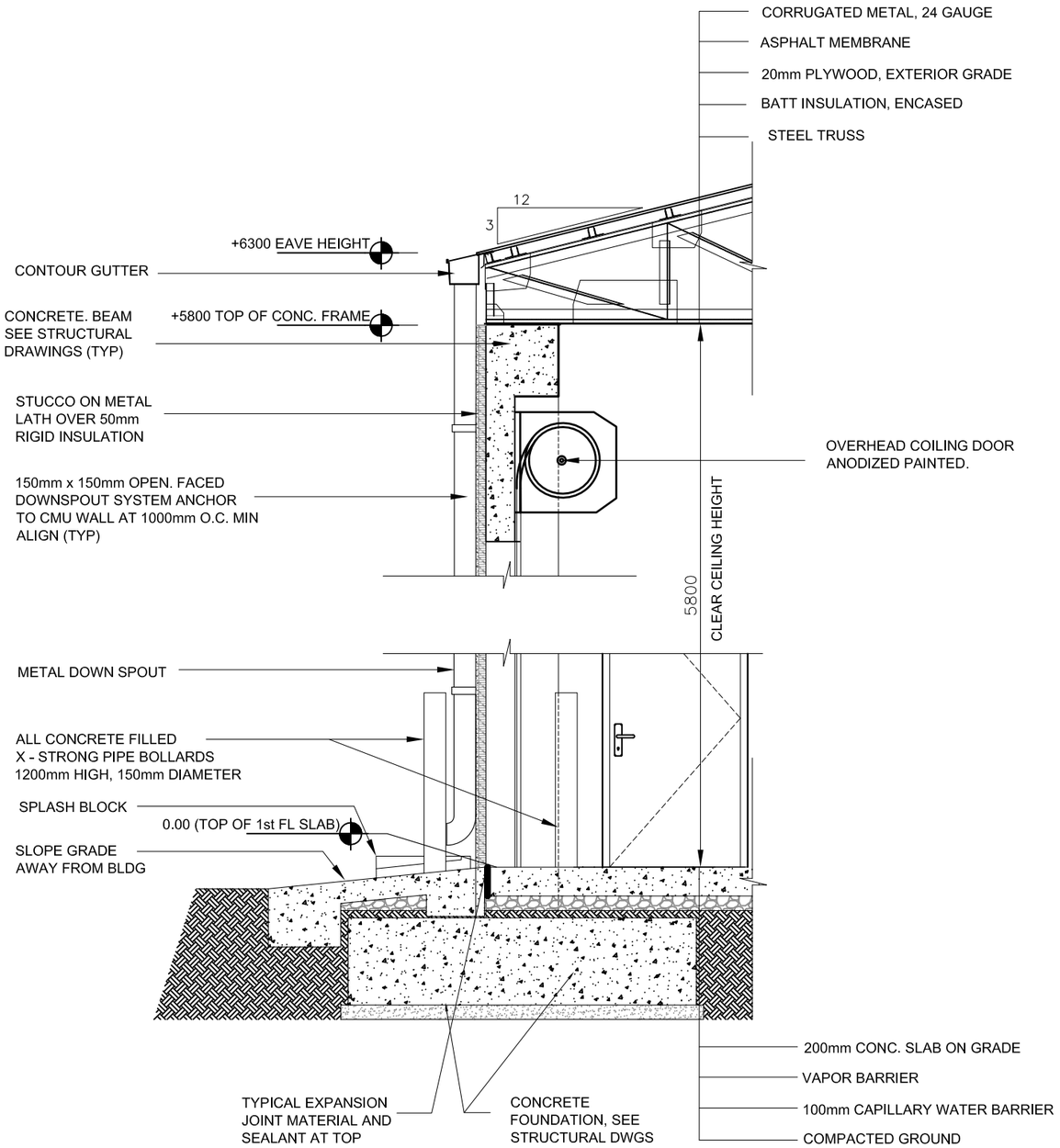

3 | WALL SECTION

A_A110 SCALE: 1:25

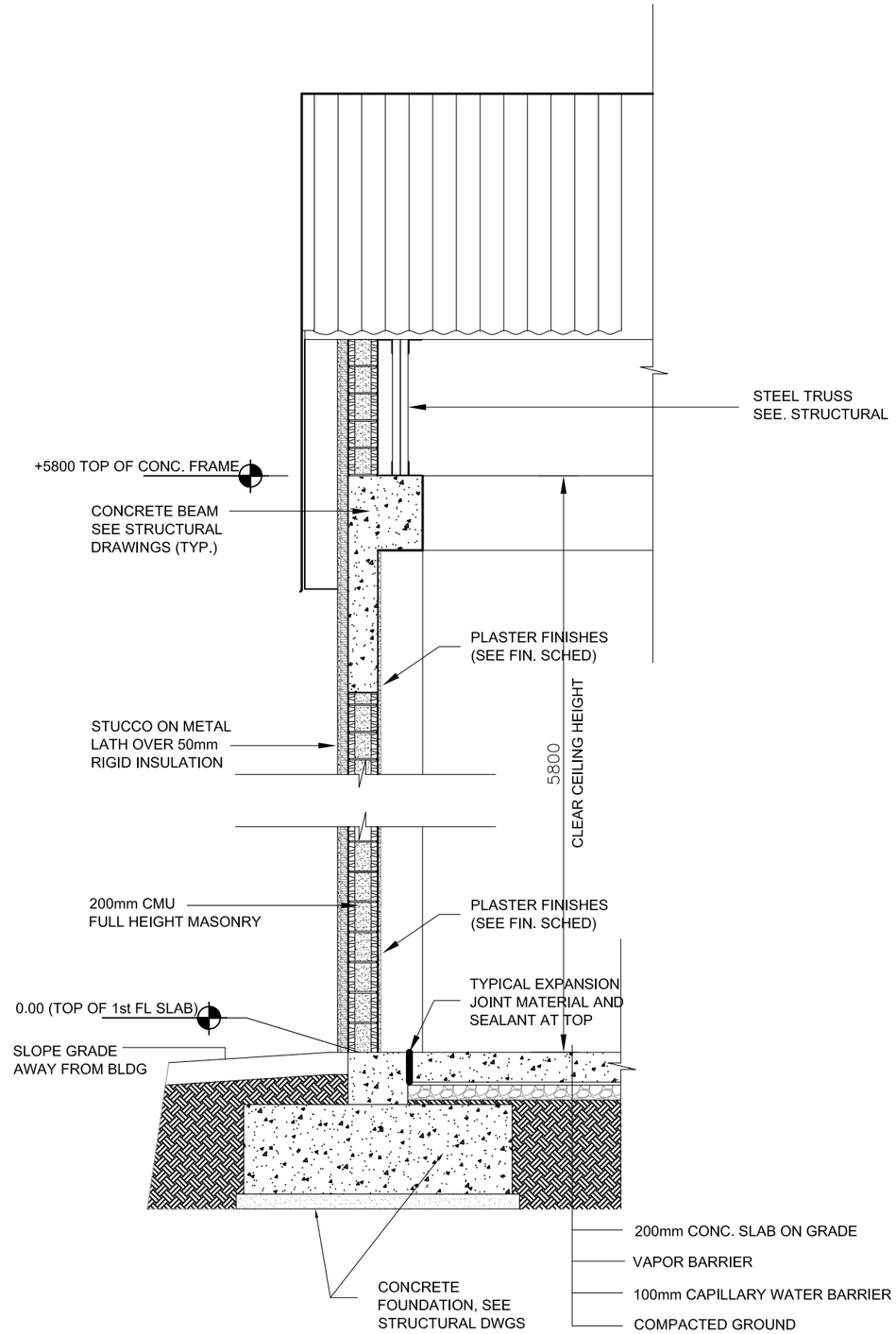

2 | WALL SECTION

A_A110 SCALE: 1:25

0.25 0 2.5m

SCALE 1:25

PRELIMINARY - NOT FOR CONSTRUCTION

REV	DATE	BY	SUB	APP	DESCRIPTION

DESIGNED T. LODGE
DRAWN WAHIDULLAH.Y
CHECKED P.HOPE
IN CHARGE D. WHEELER
DATE 05 DEC 2009

AFGHAN NATIONAL SECURITY FORCE
Comprehensive Plan for Facilities Development

MINISTRY OF INTERIOR (MoI) - AFGHAN NATIONAL POLICE
PROVINCIAL FIRE STATION TYPE-B

Wall Section

SCALE AS SHOWN

PROJECT NO. AS SHOWN

A_A110

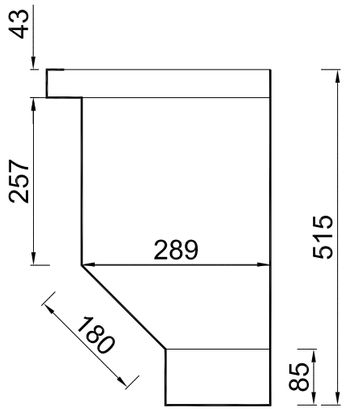

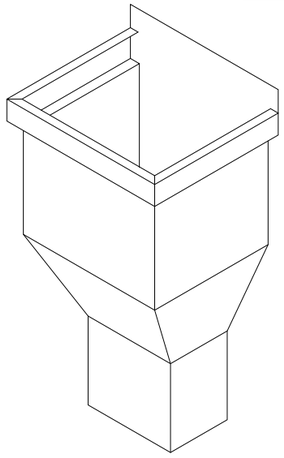

C | CONTOUR GUTTER DETAIL

A_A111 SCALE: N.T.S

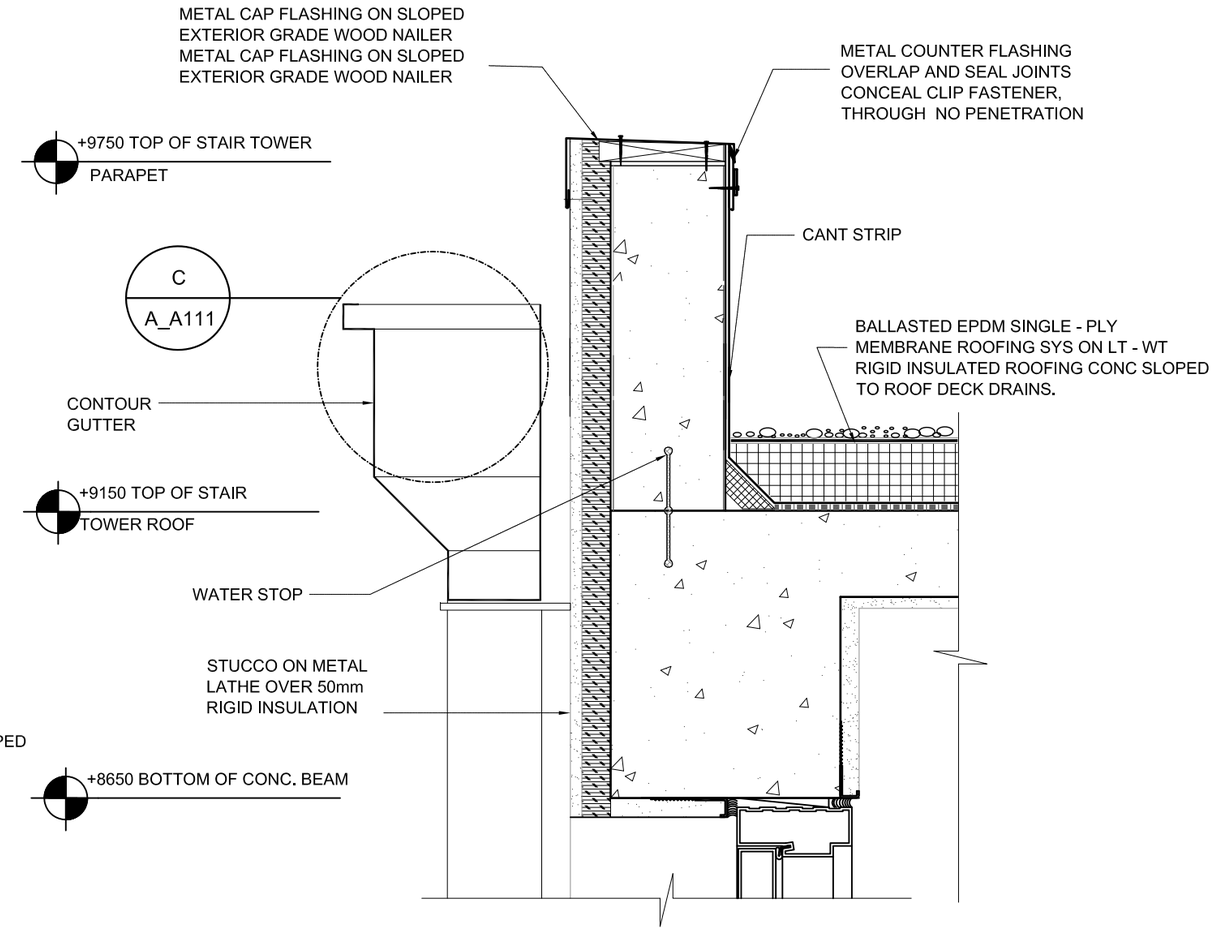

A | STAIR TOWER ROOF DETAIL

A_A111 SCALE: 1:5

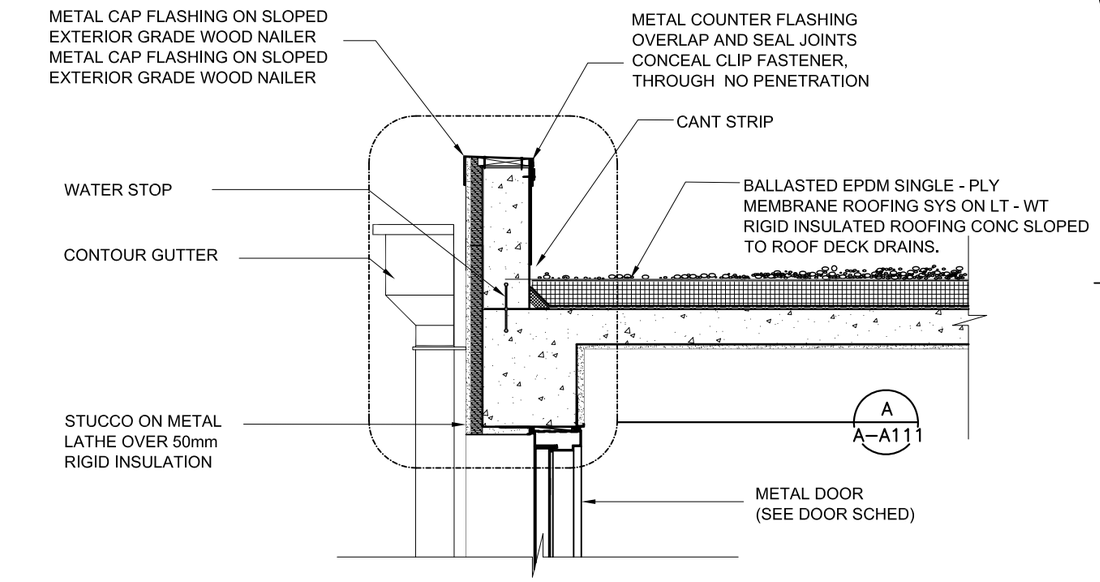

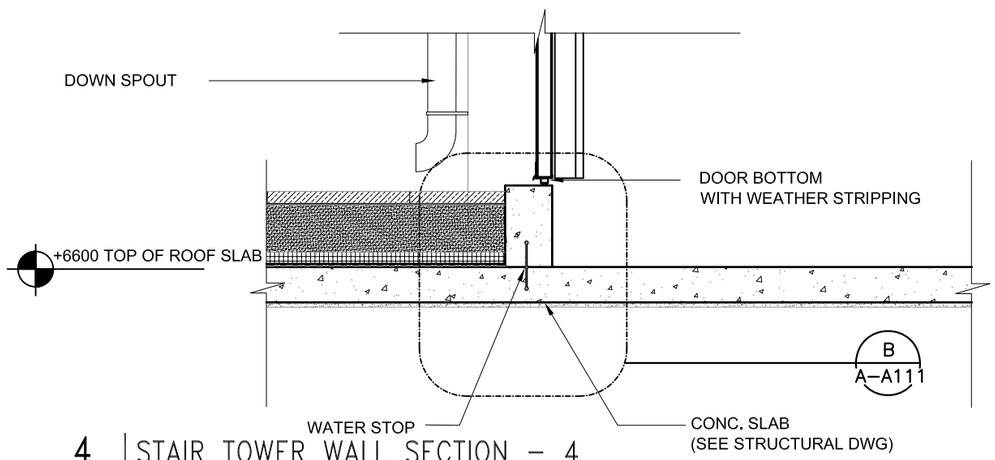

4 | STAIR TOWER WALL SECTION – 4

A_A111 SCALE: 1:15

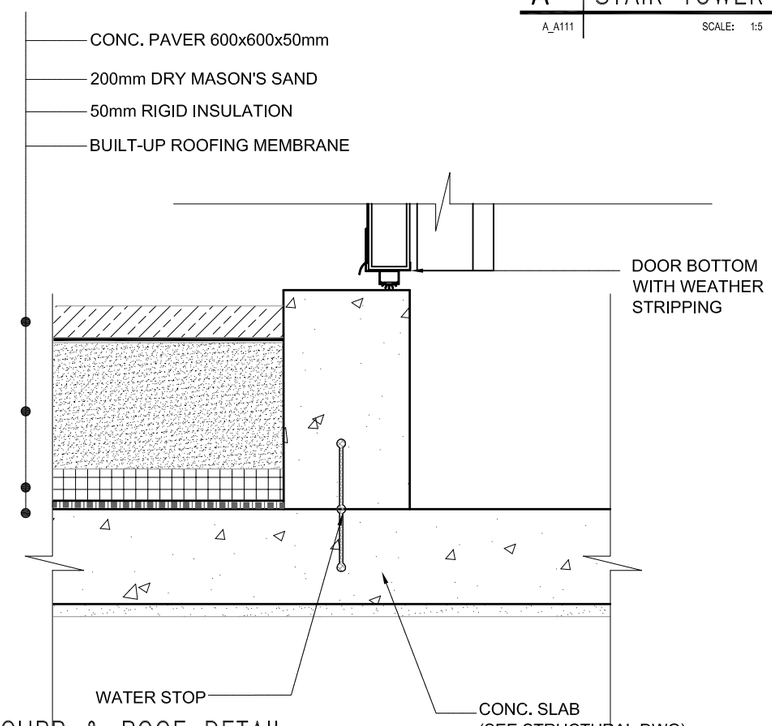

B | CONC. CURB & ROOF DETAIL

A_A111 SCALE: 1:5

© COPYRIGHT 2010 MACTEC

NOT FOR CONSTRUCTION / DESIGN DEVELOPMENT SUBMITTAL

REV	DATE	BY	SUB	APP	DESCRIPTION

DESIGNED P.HOPE
DRAWN WAHIDULLAH.Y
CHECKED P.HOPE
IN CHARGE D. WHEELER
DATE 05 DEC 2009

AFGHAN NATIONAL SECURITY FORCE
Comprehensive Plan for Facilities Development
MINISTRY OF INTERIOR (MoI) - AFGHAN NATIONAL POLICE
PROVINCIAL FIRE STATION TYPE - B

Wall Section 4 & Details

SCALE AS SHOWN

PROJECT NO. –

A_A111

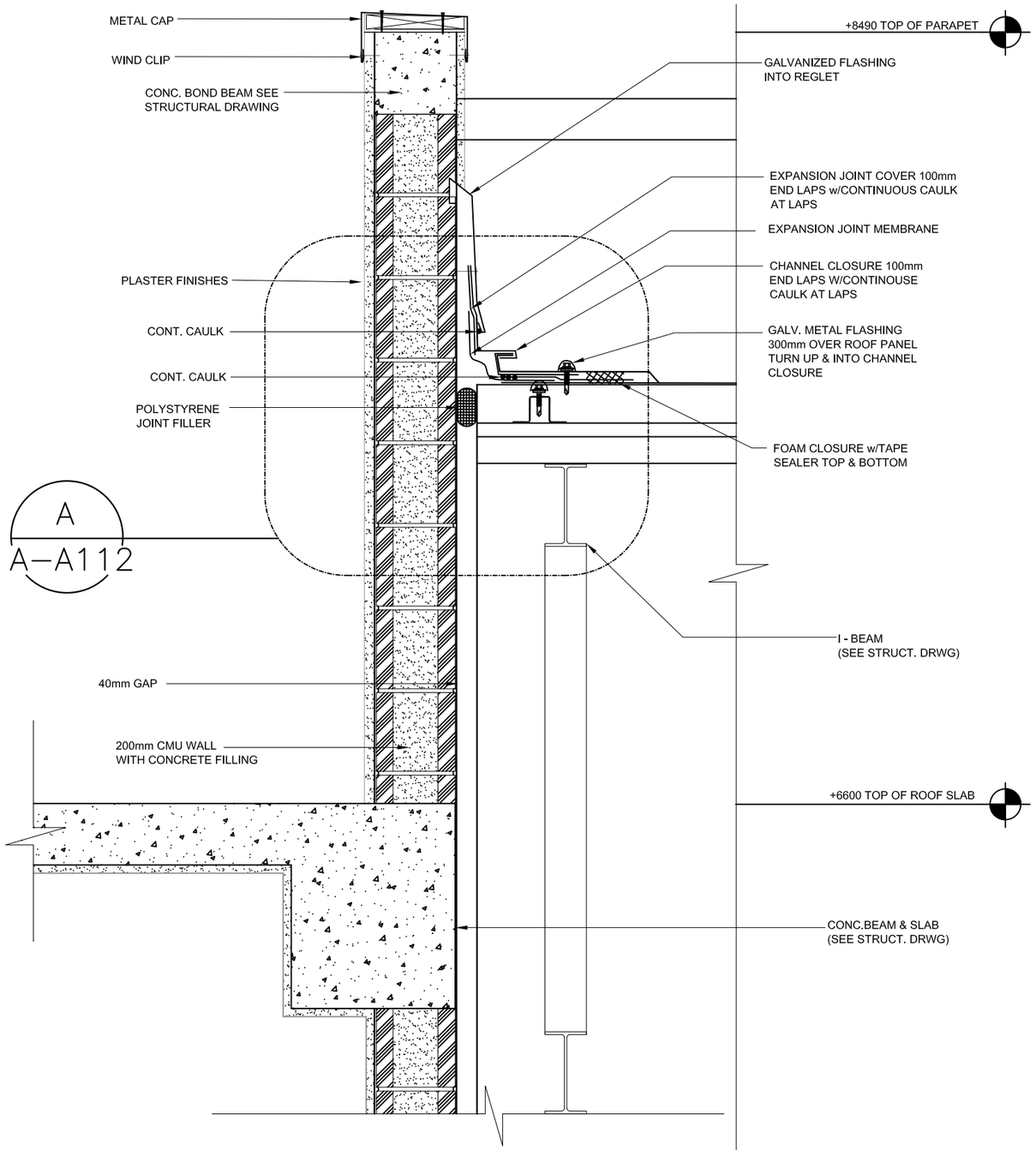

5 | WALL SECTION BETWEEN GABLE ROOF & CMU WALL

A_A112 SCALE: N.T.S

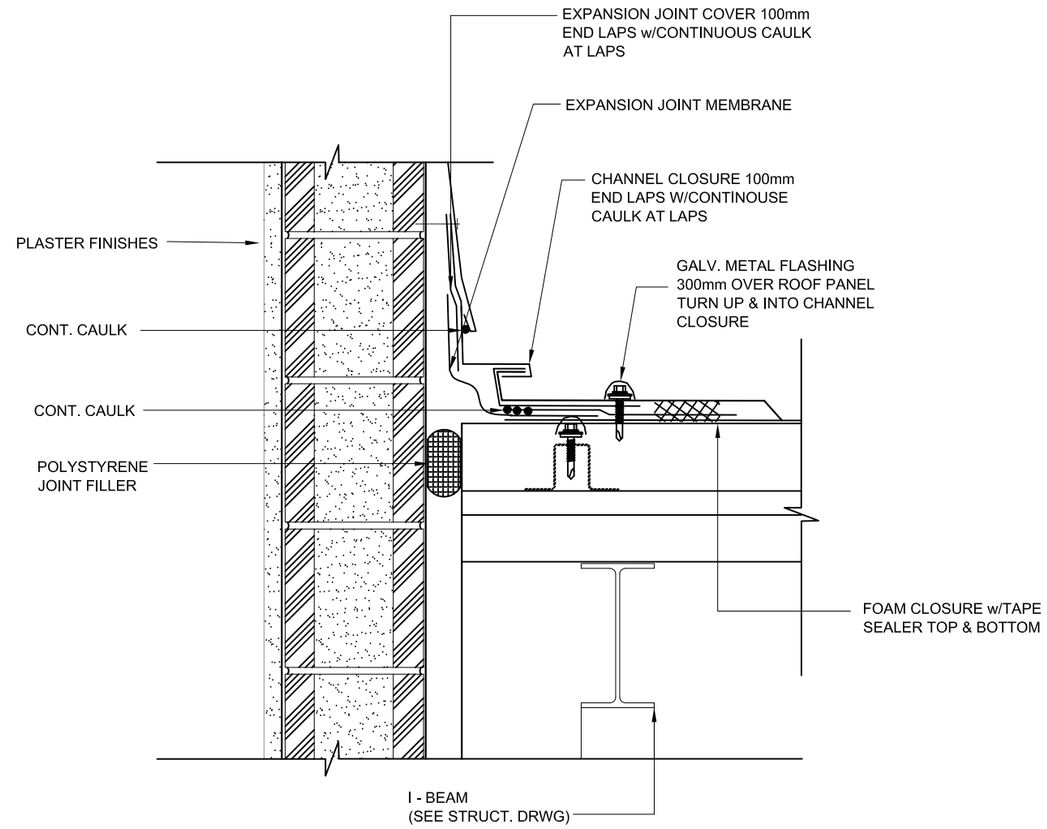

A | ROOF RAKE DETAIL

A_A112 SCALE: N.T.S

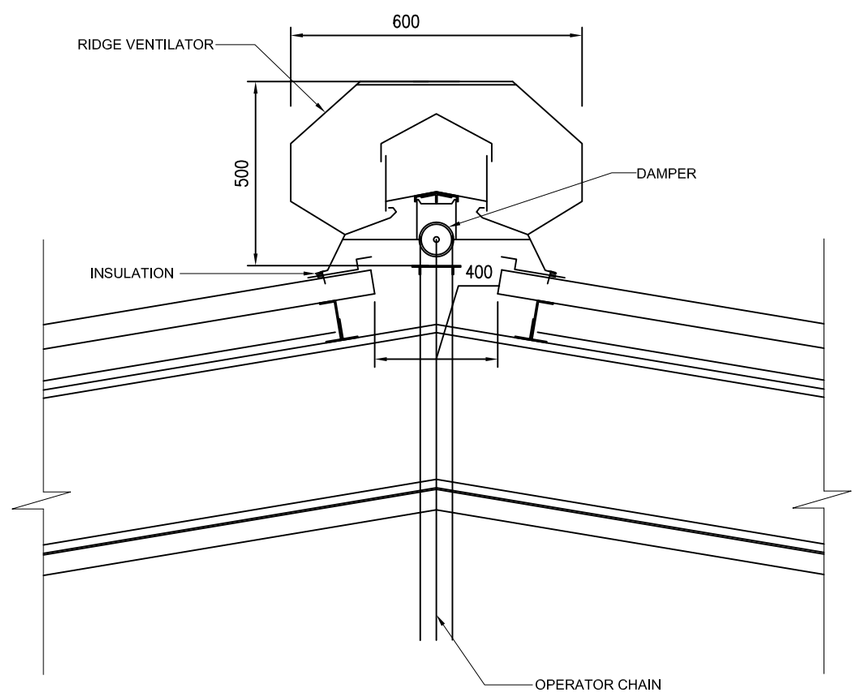

1 | RIDGE VENT DETAIL TYP.

A_A112 SCALE: N.T.S

PRELIMINARY - NOT FOR CONSTRUCTION

REV	DATE	BY	SUB/APP	DESCRIPTION

DESIGNED P.HOPE
DRAWN WAHIDULLAH.Y
CHECKED P.HOPE
IN CHARGE D. WHEELER
DATE 05 DEC 2009

AFGHAN NATIONAL SECURITY FORCE
Comprehensive Plan for Facilities Development

MINISTRY OF INTERIOR (MoI) - AFGHAN NATIONAL POLICE
PROVINCIAL FIRE STATION TYPE - B

Wall Section - 5

SCALE AS SHOWN

PROJECT NO. –

A_A112

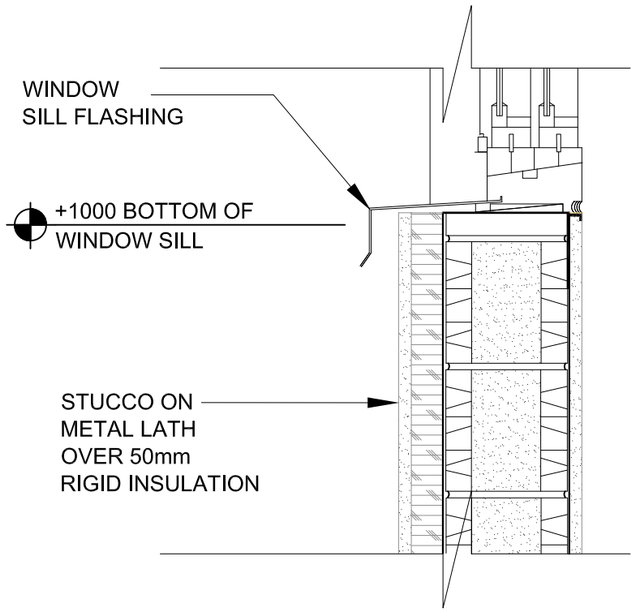

D | WALL & WINDOW DETAIL

A_A113 SCALE: 1:5

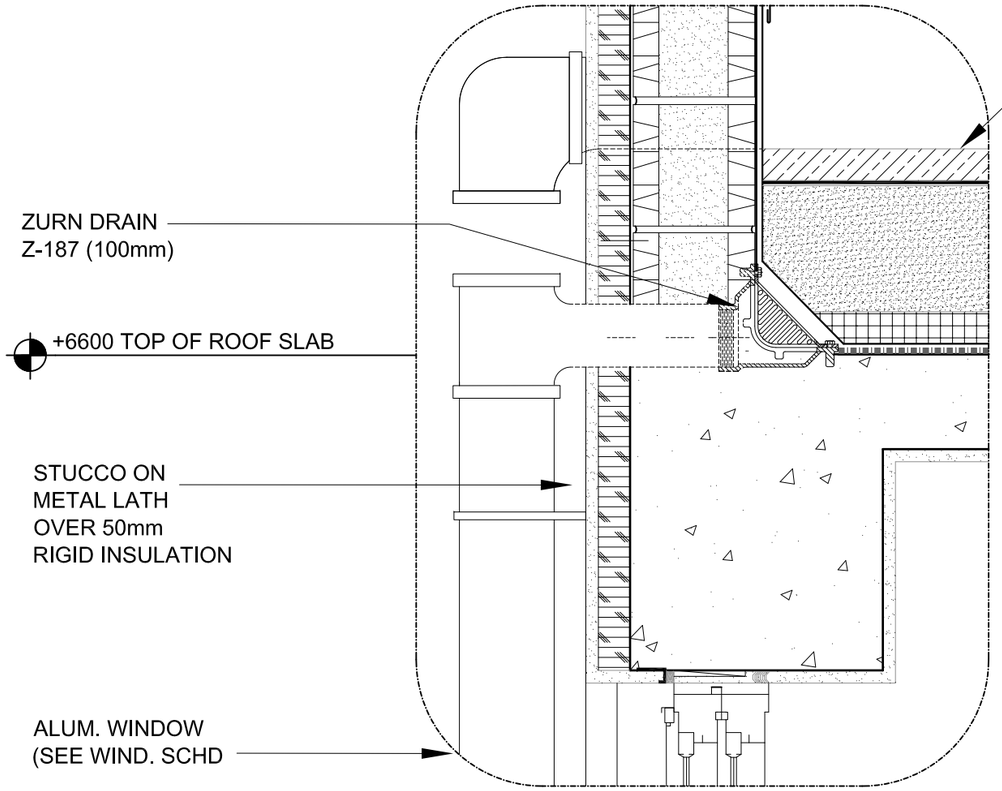

B | ROOF ZURN DRAIN DETAIL

A_A113 SCALE: 1:5

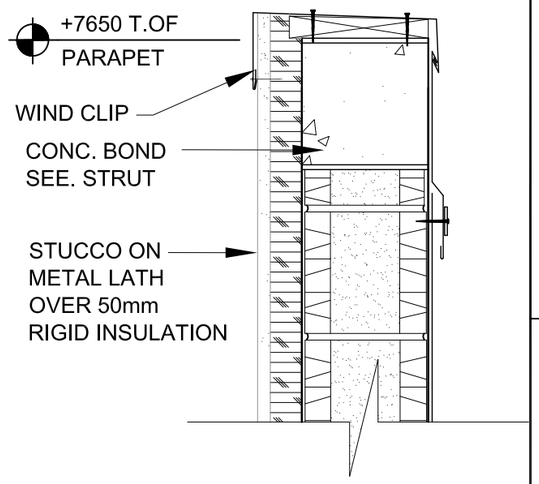

A | PARAPET DETAIL

A_A113 SCALE: 1:5

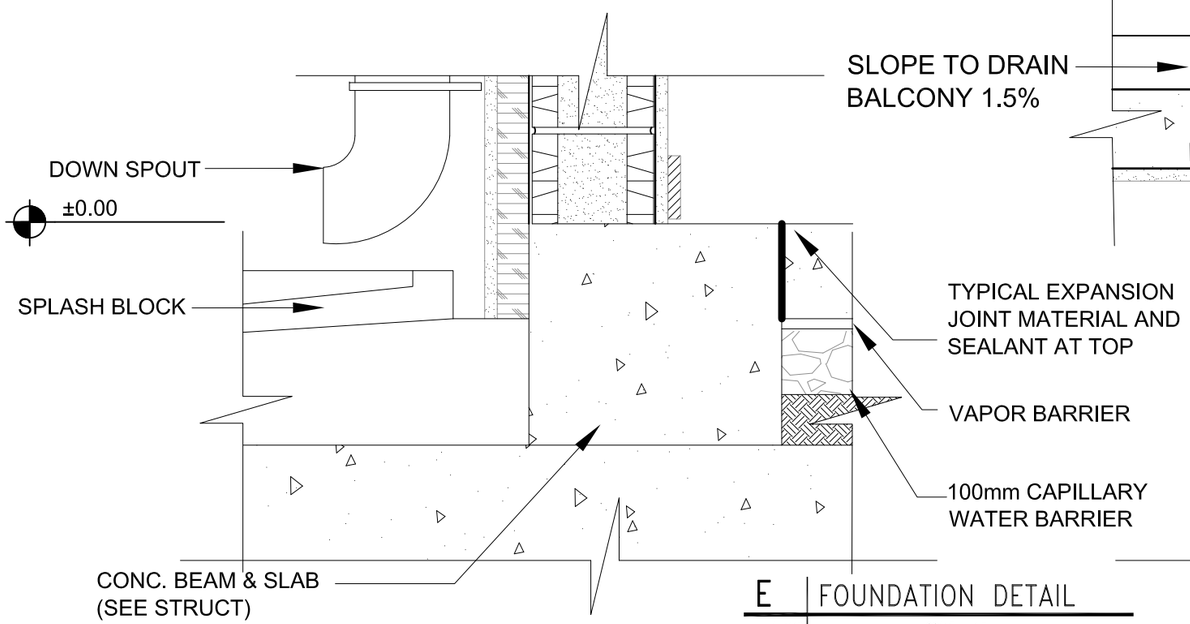

E | FOUNDATION DETAIL

A_A113 SCALE: 1:5

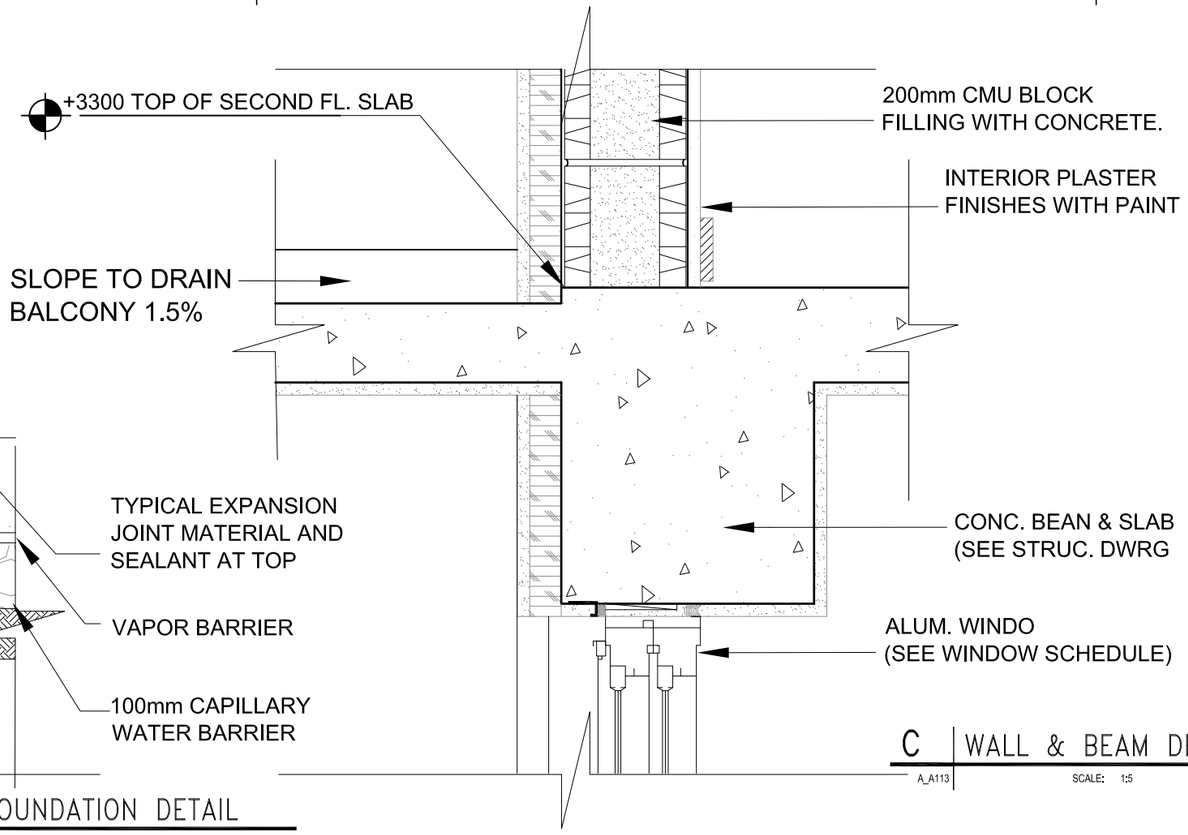

C | WALL & BEAM DETAIL

A_A113 SCALE: 1:5

NOT FOR CONSTRUCTION / DESIGN DEVELOPMENT SUBMITTAL

© COPYRIGHT 2010 MACTEC

REV	DATE	BY	SUB	APP	DESCRIPTION

DESIGNED P.HOPE
DRAWN WAHIDULLAH.Y
CHECKED P.HOPE
IN CHARGE D. WHEELER
DATE 05 DEC 2009

AFGHAN NATIONAL SECURITY FORCE
Comprehensive Plan for Facilities Development

MINISTRY OF INTERIOR (MoI) - AFGHAN NATIONAL POLICE
PROVINCIAL FIRE STATION TYPE - B

Wall Section 1 Details

SCALE AS SHOWN

PROJECT NO. –

A_A113

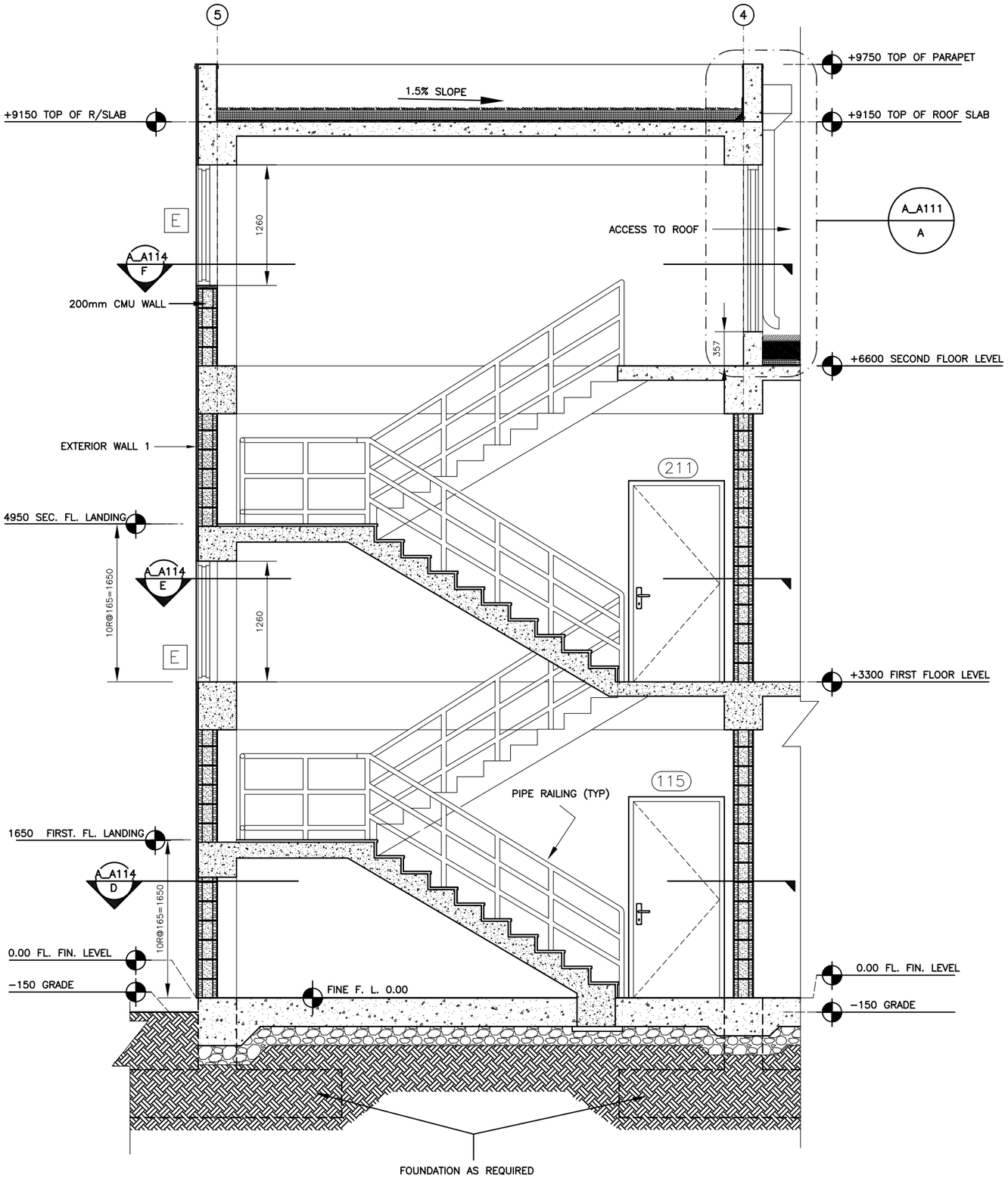

D | FIRE STATION SECTION D

A_A111 SCALE: 1:25

1M 0 4M

SCALE 1:25

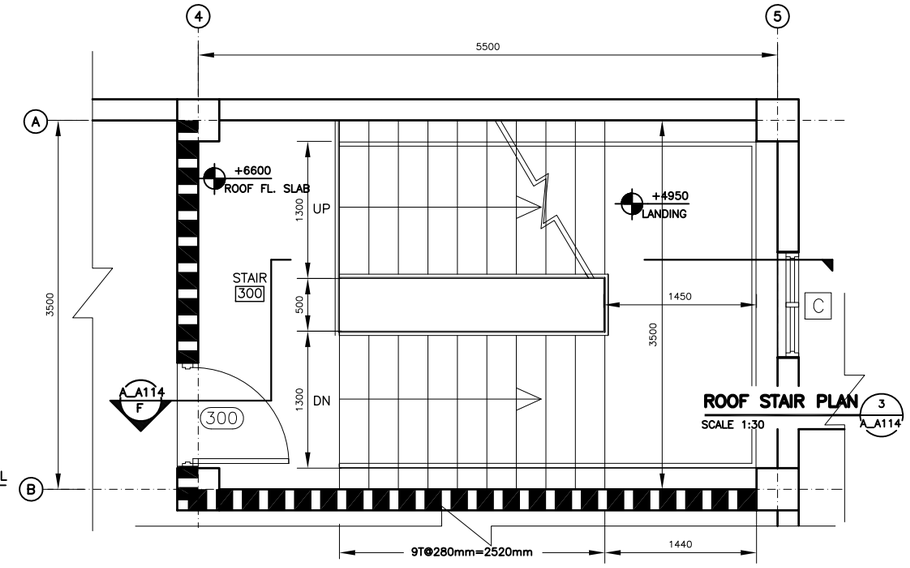

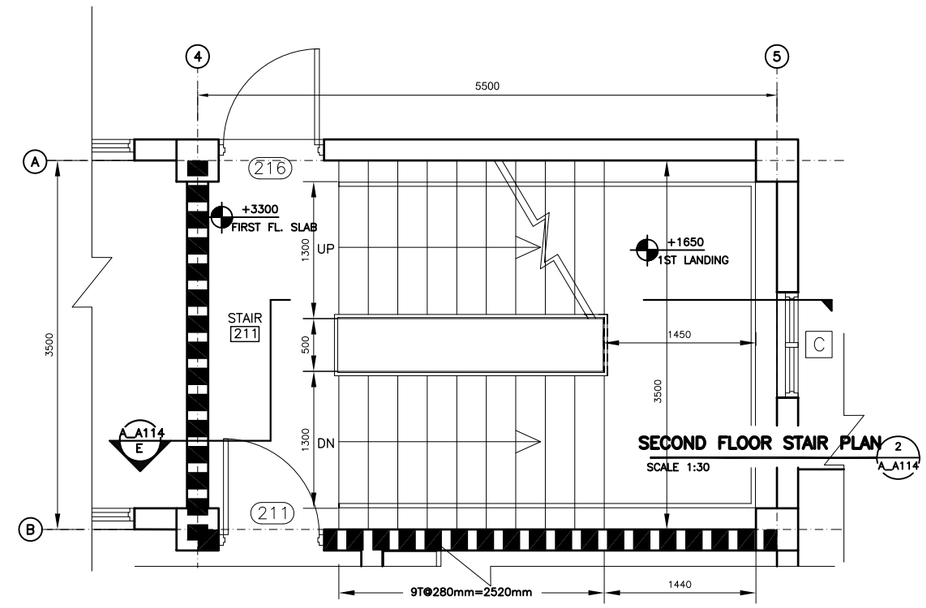

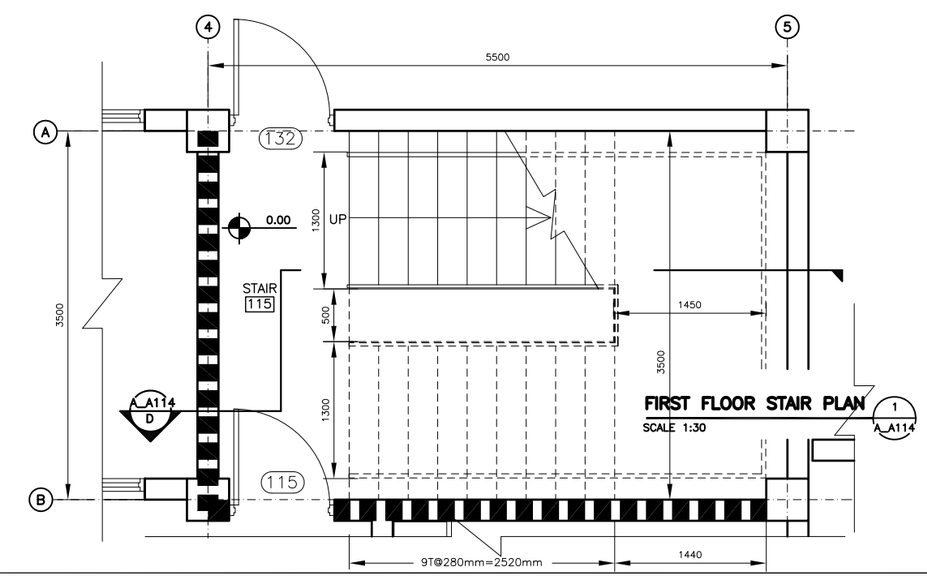

PRELIMINARY - NOT FOR CONSTRUCTION

REV	DATE	BY	SUB	APP	DESCRIPTION

DESIGNED T. LODGE
DRAWN ABDUL BASIR
CHECKED T. LODGE
IN CHARGE D. WHEELER
DATE 05 DEC 2009

AFGHAN NATIONAL SECURITY FORCE
Comprehensive Plan for Facilities Development

MINISTRY OF INTERIOR (MoI) - AFGHAN NATIONAL POLICE
PROVINCIAL FIRE STATION TYPE-B

Stair Section & Enlarged Plan

SCALE AS SHOWN

PROJECT NO. AS SHOWN

A_A114

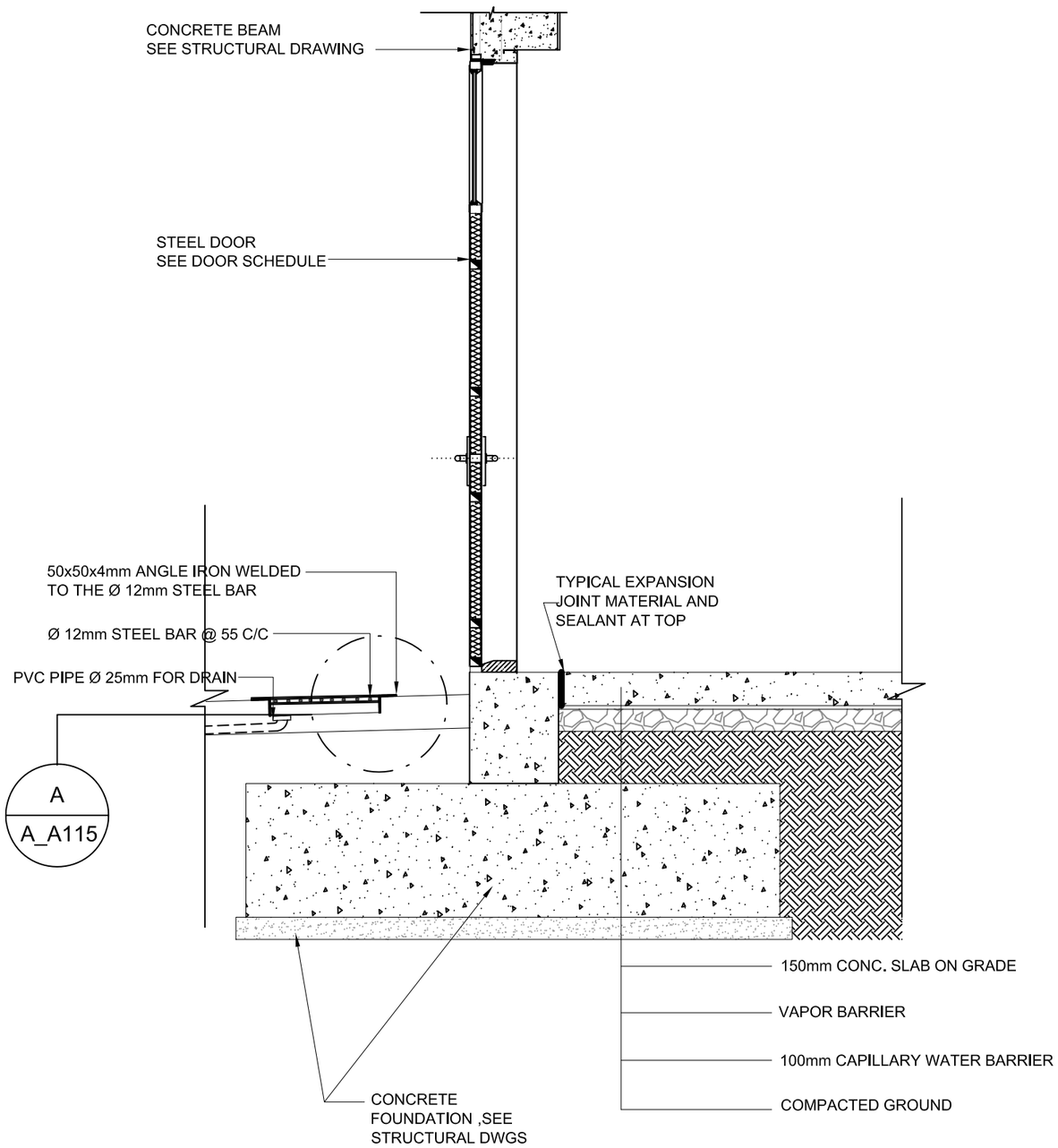

1 SHOE CLEAN GRATE SECTION

A_A115 REF. SCALE: NTS

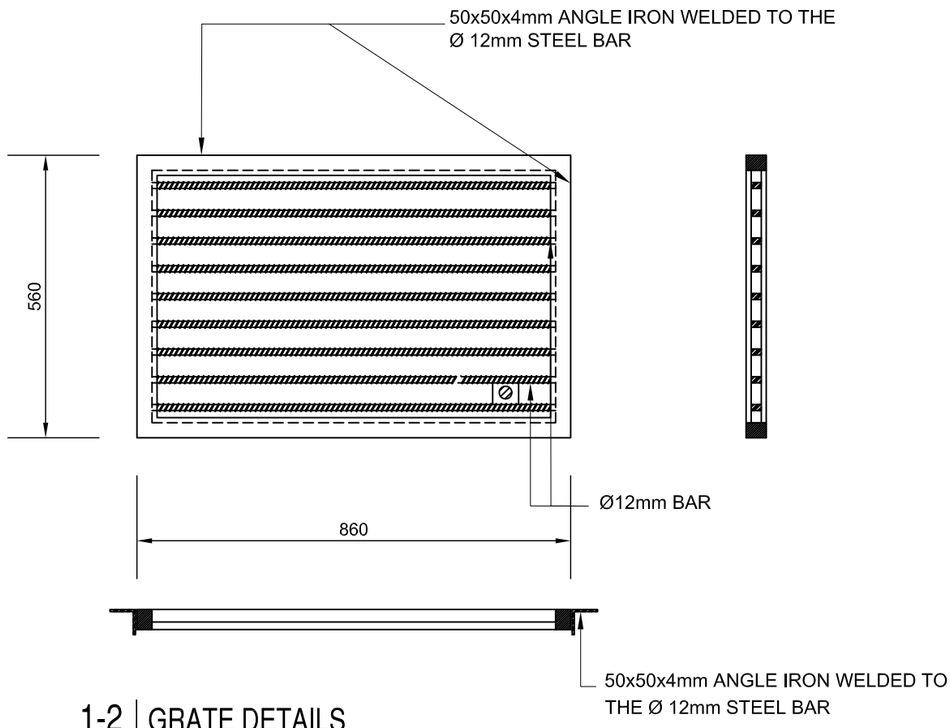

1-2 GRATE DETAILS

A_A115 REF. SCALE: N.T.S

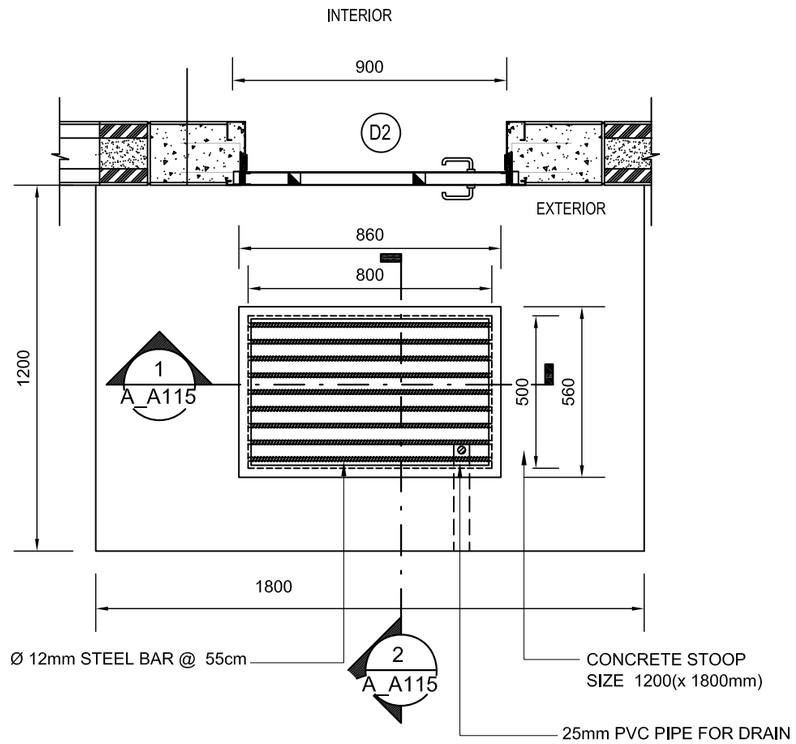

A SHOE CLEAN GRATE PLAN

A_A115 REF. SCALE: N.T.S

PRELIMINARY - NOT FOR CONSTRUCTION

REV	DATE	BY	SUB	APP	DESCRIPTION

DESIGNED P.HOPE
DRAWN WAHIDULLAH.Y
CHECKED P.HOPE
IN CHARGE D. WHEELER
DATE 05 DEC 2009

AFGHAN NATIONAL SECURITY FORCE
Comprehensive Plan for Facilities Development
MINISTRY OF INTERIOR (MoI) - AFGHAN NATIONAL POLICE
PROVINCIAL FIRE STATION TYPE - B

Door Elevation, Section & Details

SCALE AS SHOWN

PROJECT NO. –

A_A 115

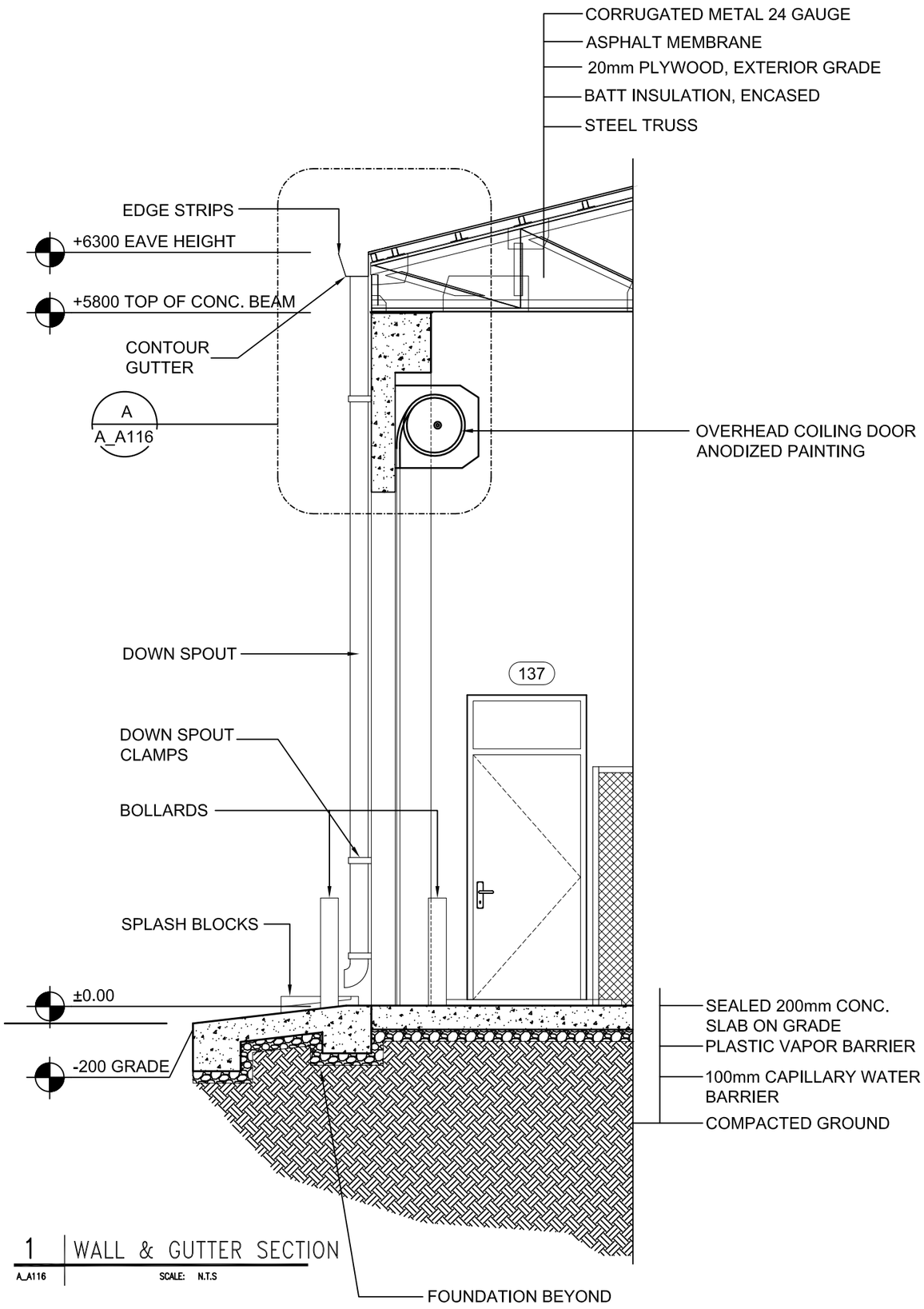

1 | WALL & GUTTER SECTION
A_A116 SCALE: N.T.S

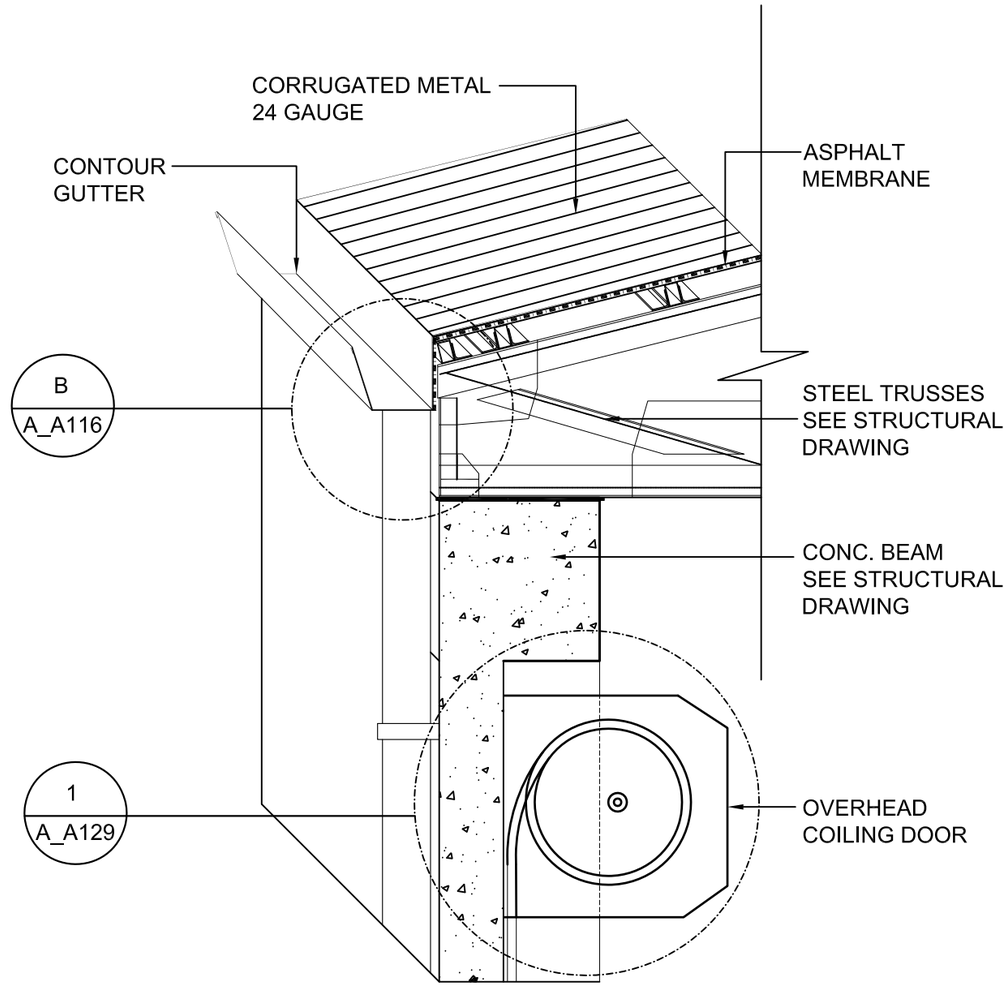

A | GUTTER ISOMETERIC
A_A116 SCALE: N.T.S

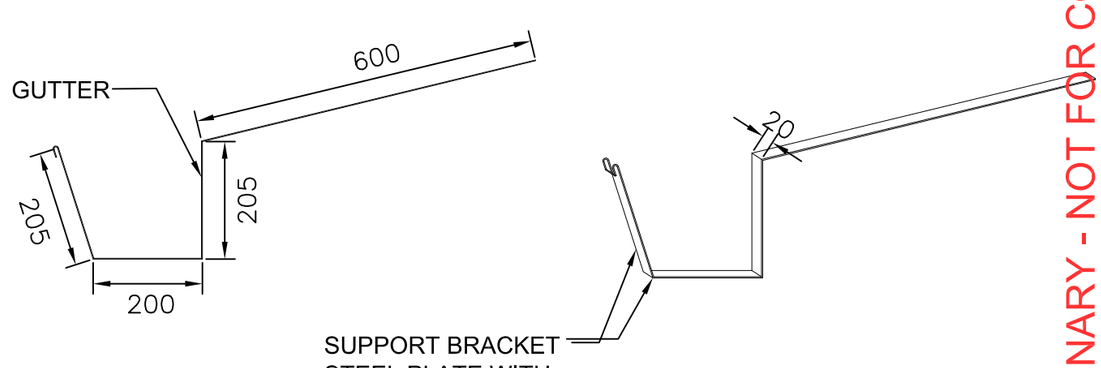

B | HANGER DETAIL
A_A116 SCALE: N.T.S

PRELIMINARY - NOT FOR CONSTRUCTION

REV	DATE	BY	SUB	APP	DESCRIPTION

DESIGNED P.HOPE
DRAWN WAHIDULLAH.Y
CHECKED P.HOPE
IN CHARGE D. WHEELER
DATE 05 DEC 2009

AFGHAN NATIONAL SECURITY FORCE
Comprehensive Plan for Facilities Development
MINISTRY OF INTERIOR (MoI) - AFGHAN NATIONAL POLICE
PROVINCIAL FIRE STATION TYPE-B

Gutter Section And Isometric

SCALE AS SHOWN
PROJECT NO. AS SHOWN

A_A116

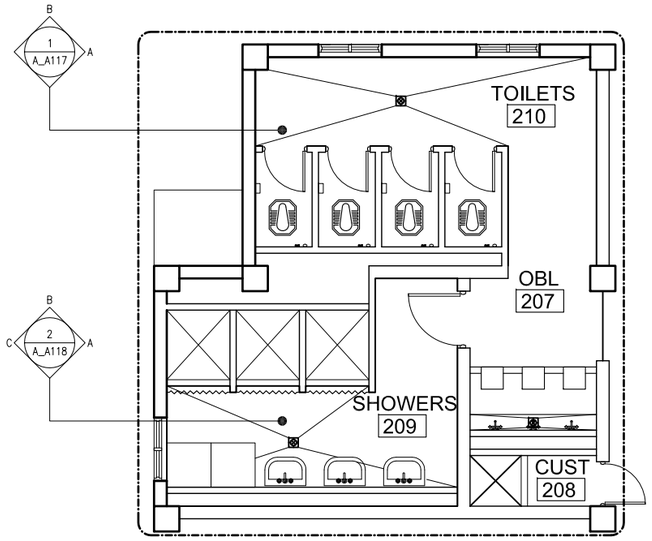

1 TOILET & SHOWER PLAN
A_A117 SCALE: 1:50

500 0 2500
SCALE 1:50

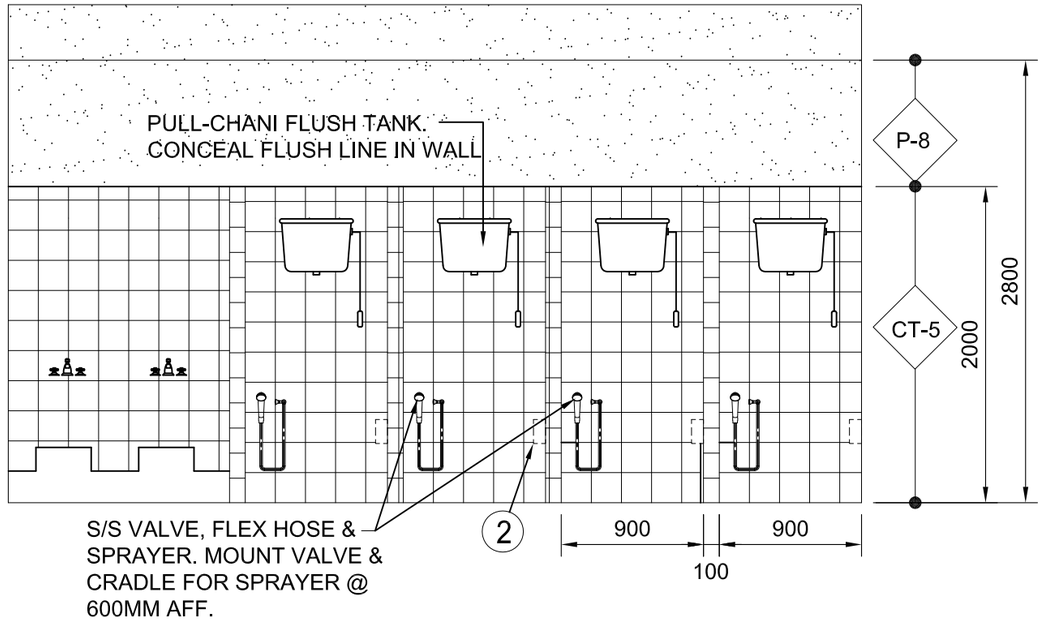

A TOILET INTERIOR ELEVATION
A_A117 SCALE: 1:25

TOILET ACCESSORY SCHEDULE

No.	Description
①	MIRROR
②	TOILET PAPER HOLDER
③	SHOWER CURTAIN & ROD

NOTES:

1– SEE SHEET A_A–121 FOR FINISH SCHEDULE

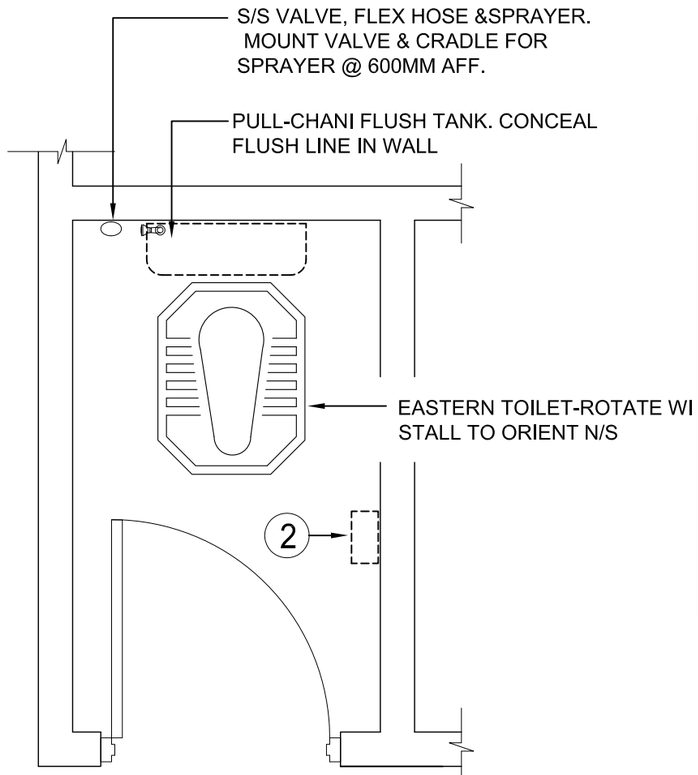

TOILET– ENLARGED PLAN
A_A117 SCALE: No Scale

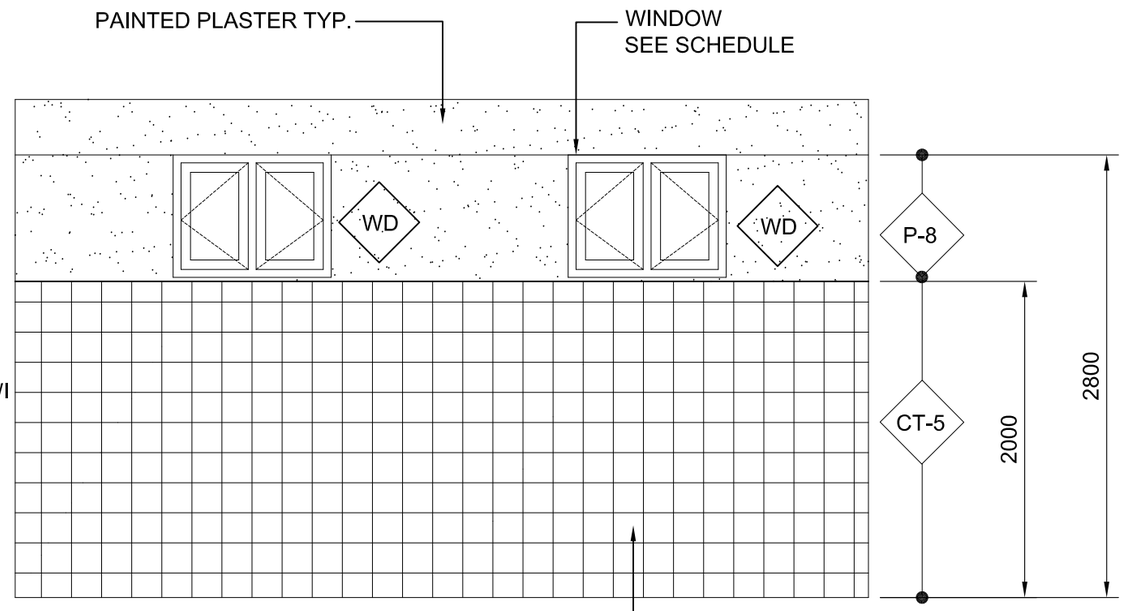

B TOILET INTERIOR ELEVATION
A_A117 SCALE: 1:25

250 0 1750
SCALE 1:25

PRELIMINARY - NOT FOR CONSTRUCTION

REV	DATE	BY	SUB	APP	DESCRIPTION

DESIGNED P.HOPE
DRAWN WAHIDULLAH.Y
CHECKED P.HOPE
IN CHARGE D. WHEELER
DATE 05 DEC 2009

AFGHAN NATIONAL SECURITY FORCE
Comprehensive Plan for Facilities Development
MINISTRY OF INTERIOR (MoI) - AFGHAN NATIONAL POLICE
PROVINCIAL FIRE STATION TYPE-B

Toilet And Shower Interior Elevation

SCALE AS SHOWN
PROJECT NO. AS SHOWN

A_A117

TOILET ACCESSORY SCHEDULE

No.	Description
①	MIRROR
②	TOILET PAPER HOLDER
③	SHOWER CURTAIN & ROD

NOTES:

1– SEE SHEET A_A–121 FOR FINISH SCHEDULE

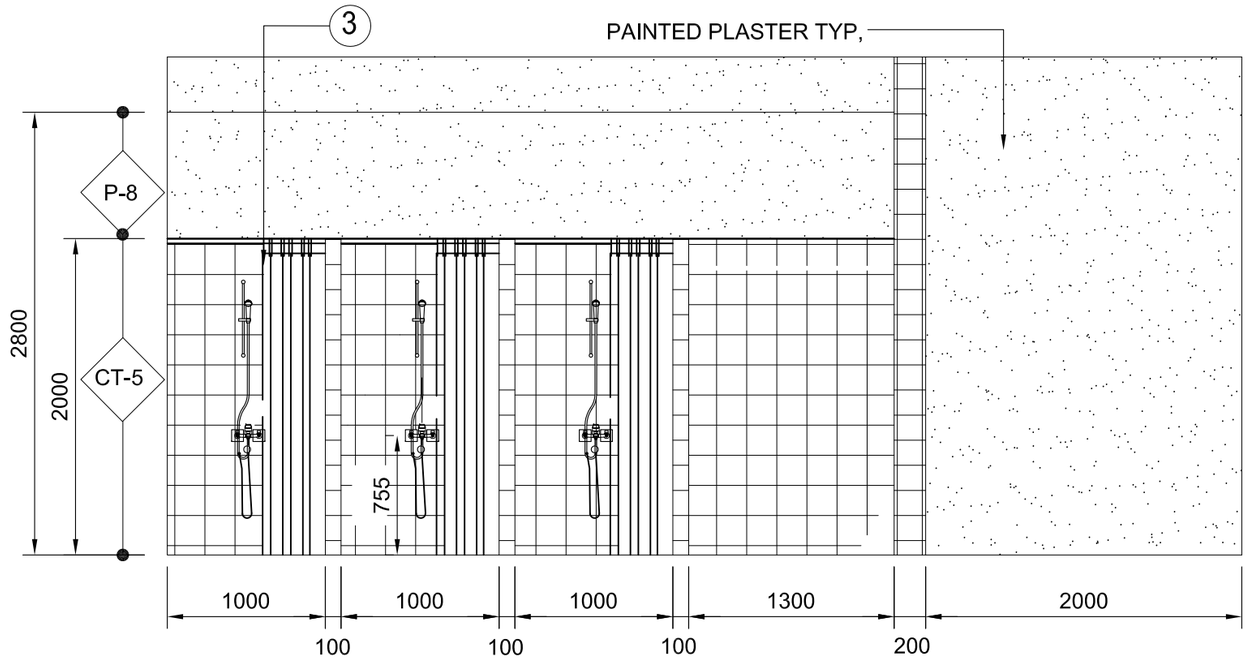

A | SHOWER INTERIOR ELEVATION

A_A118 SCALE: 1:25

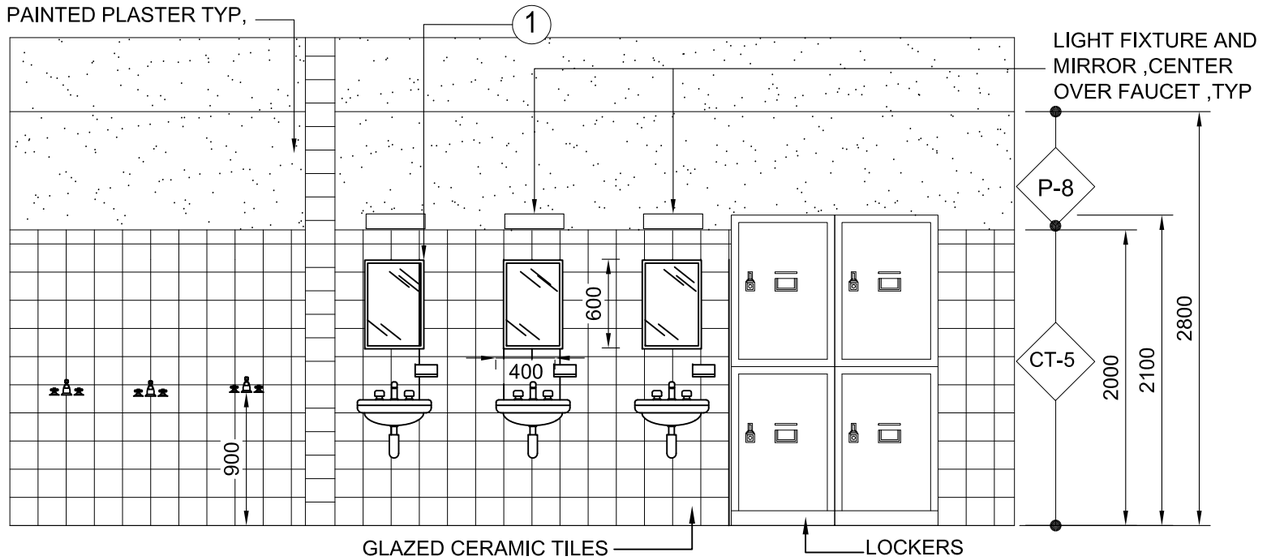

B | TOILET INTERIOR ELEVATION

A_A118 SCALE: 1:25

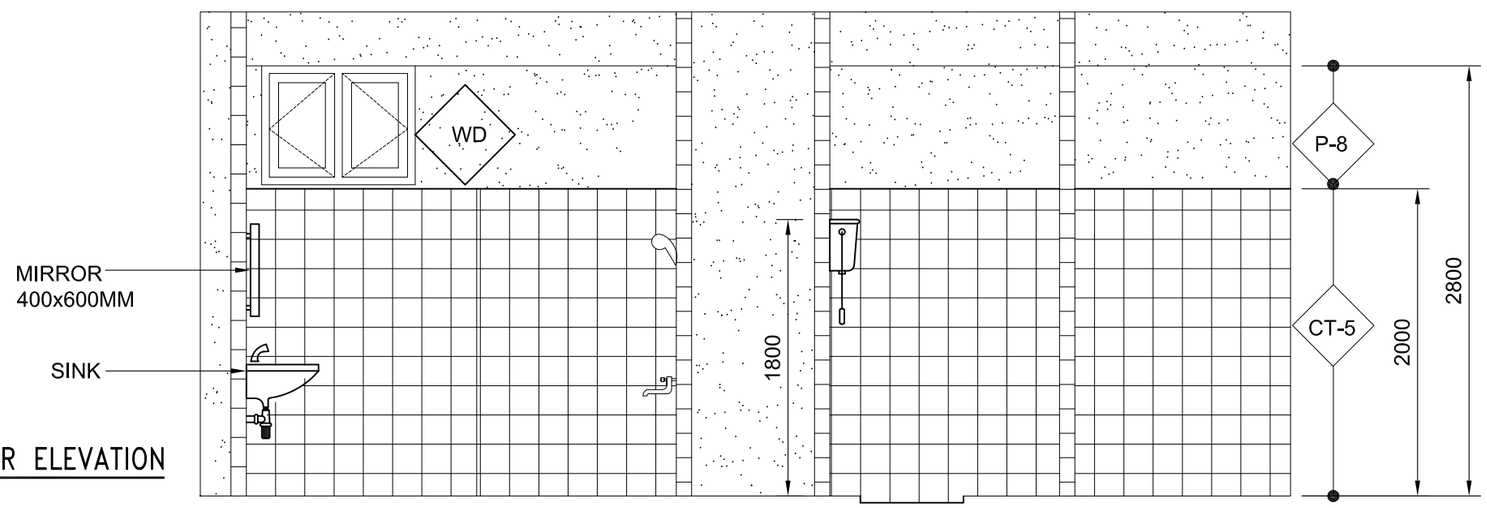

C | TOILET & SHOWER INTERIOR ELEVATION

A_A118 SCALE: 1:25

250 0 1250

SCALE 1:25

PRELIMINARY - NOT FOR CONSTRUCTION

REV	DATE	BY	SUB/APP	DESCRIPTION

DESIGNED P.HOPE
DRAWN WAHIDULLAH.Y
CHECKED P.HOPE
IN CHARGE D. WHEELER
DATE 05 DEC 2009

AFGHAN NATIONAL SECURITY FORCE
Comprehensive Plan for Facilities Development

MINISTRY OF INTERIOR (MoI) - AFGHAN NATIONAL POLICE
PROVINCIAL FIRE STATION TYPE-B

Toilet And Shower Interior Elevation

SCALE AS SHOWN

PROJECT NO. AS SHOWN

A_A118

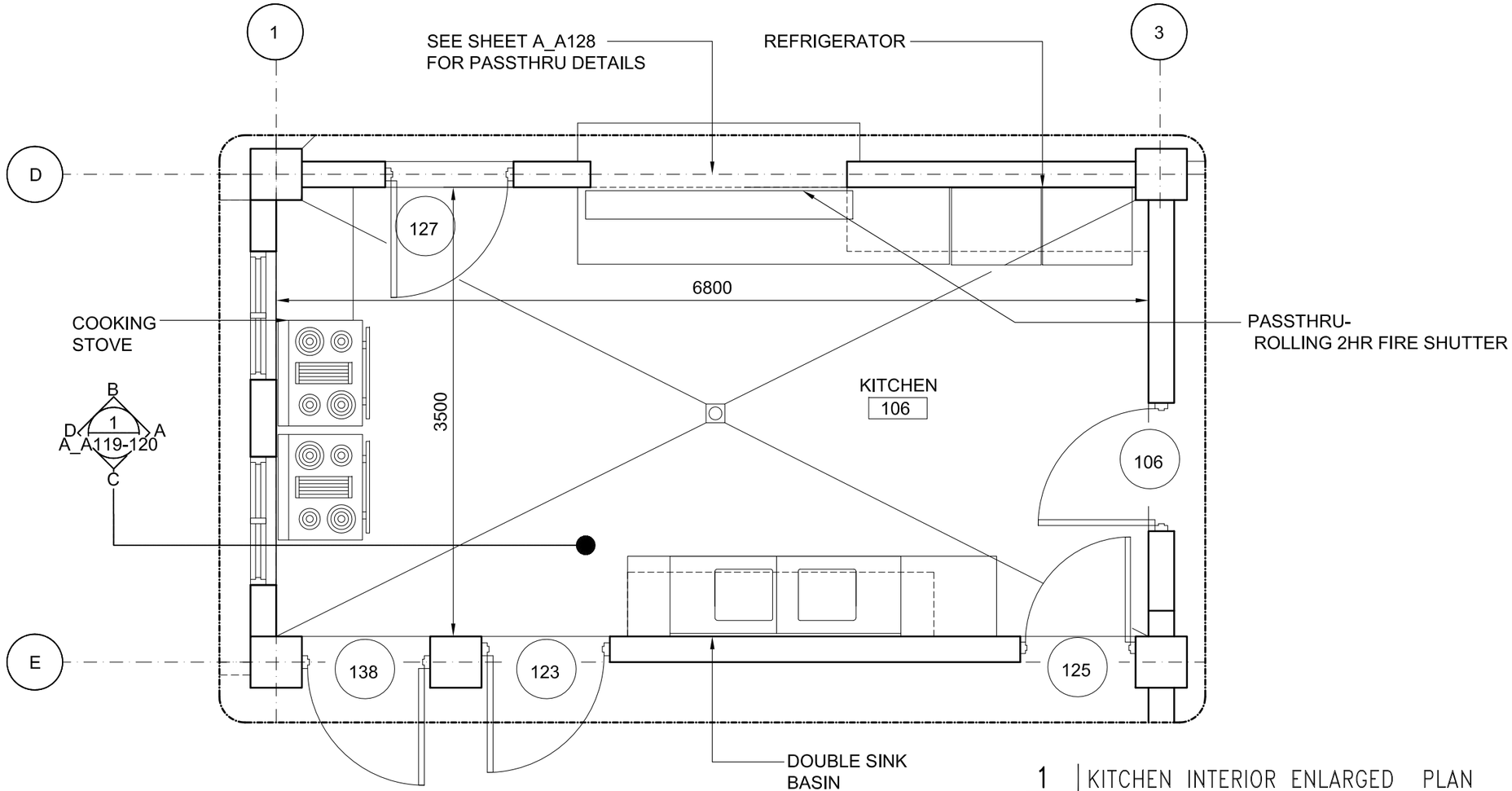

1 KITCHEN INTERIOR ENLARGED PLAN

A_A119 SCALE: 1:25

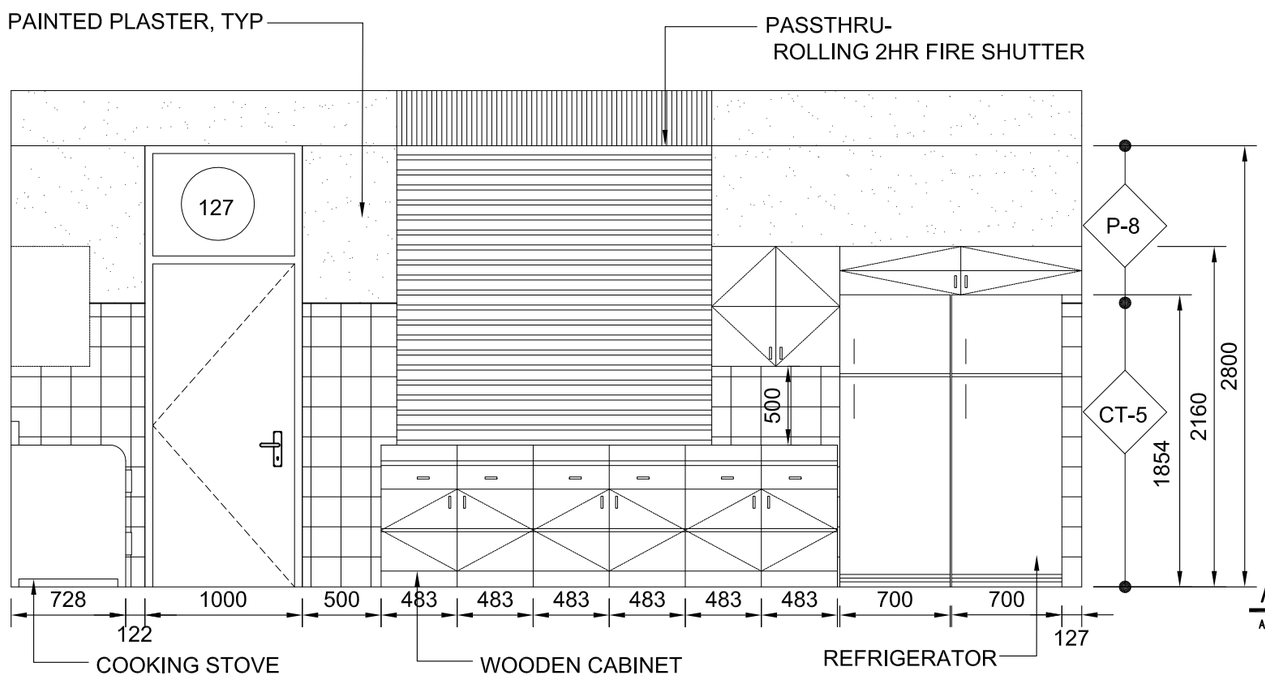

A KITCHEN INTERIOR ELEVATION

A_A119 SCALE: 1:25

250 0 1250

SCALE 1:25

PRELIMINARY - NOT FOR CONSTRUCTION

REV	DATE	BY	SUB/APP	DESCRIPTION

DESIGNED P.HOPE
DRAWN WAHIDULLAH,Y
CHECKED P.HOPE
IN CHARGE D. WHEELER
DATE 05 DEC 2009

AFGHAN NATIONAL SECURITY FORCE
Comprehensive Plan for Facilities Development

MINISTRY OF INTERIOR (MoI) - AFGHAN NATIONAL POLICE
PROVINCIAL FIRE STATION TYPE-B

Kitchen Enlarged Plan & Interior Elevation

SCALE AS SHOWN

PROJECT NO. AS SHOWN

A_A119

N:\ANP FIRE STATIONS\~9929INITIAL_F3\A4B_091205\Y39_9929INITIAL_Dwgs\HOAD\A_A119 Kitchen Enlarged Plan & Interior Elevation.dwg 01/31/2010 8:39am CAD_9

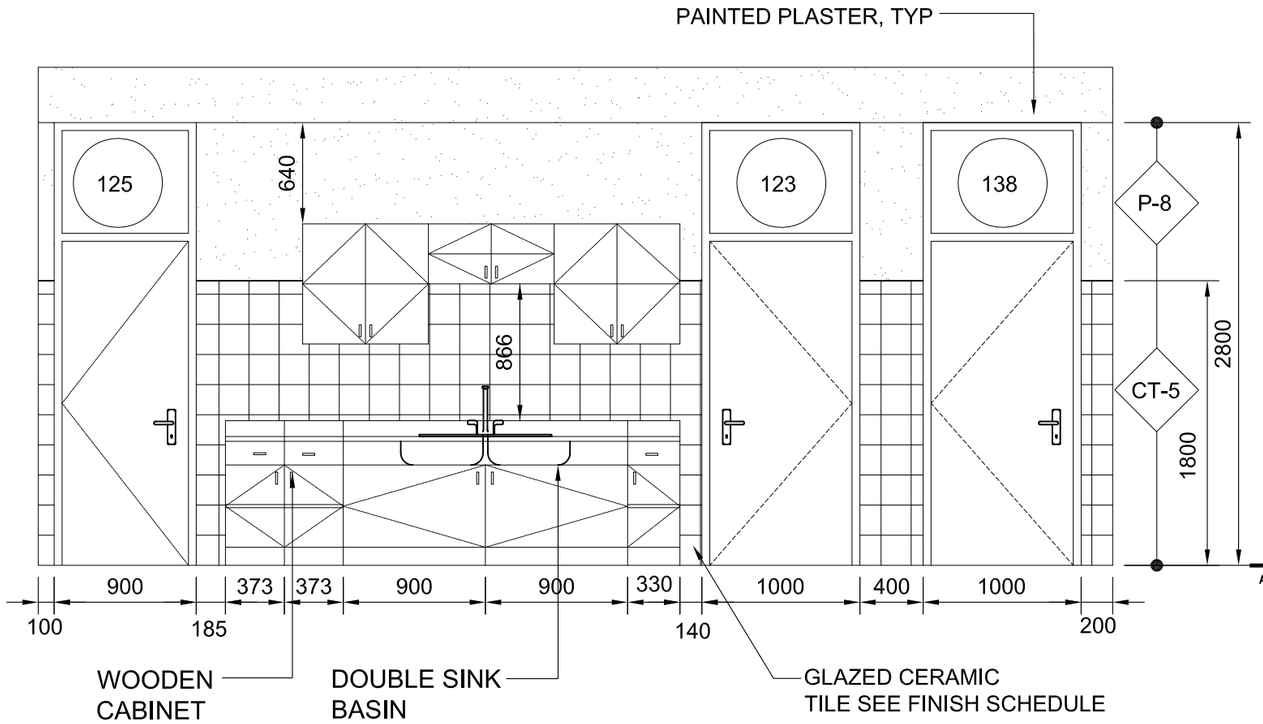

B | KITCHEN INTERIOR ELEVATION

A_A120 SCALE: 1:25

250 0 1250

SCALE 1:25

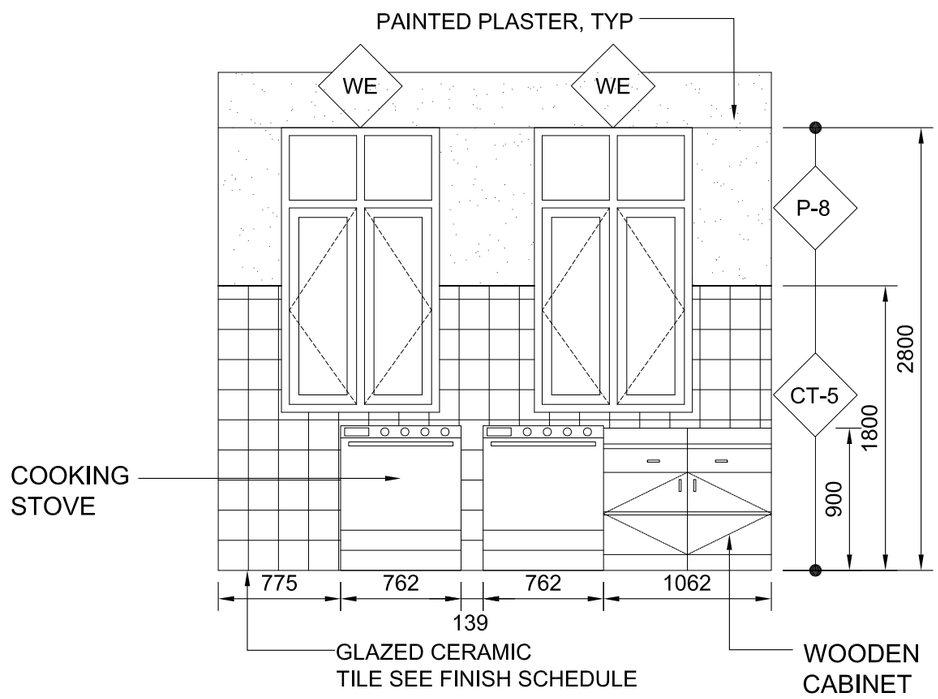

D | KITCHEN INTERIOR ELEVATION

A_A120 SCALE: 1:25

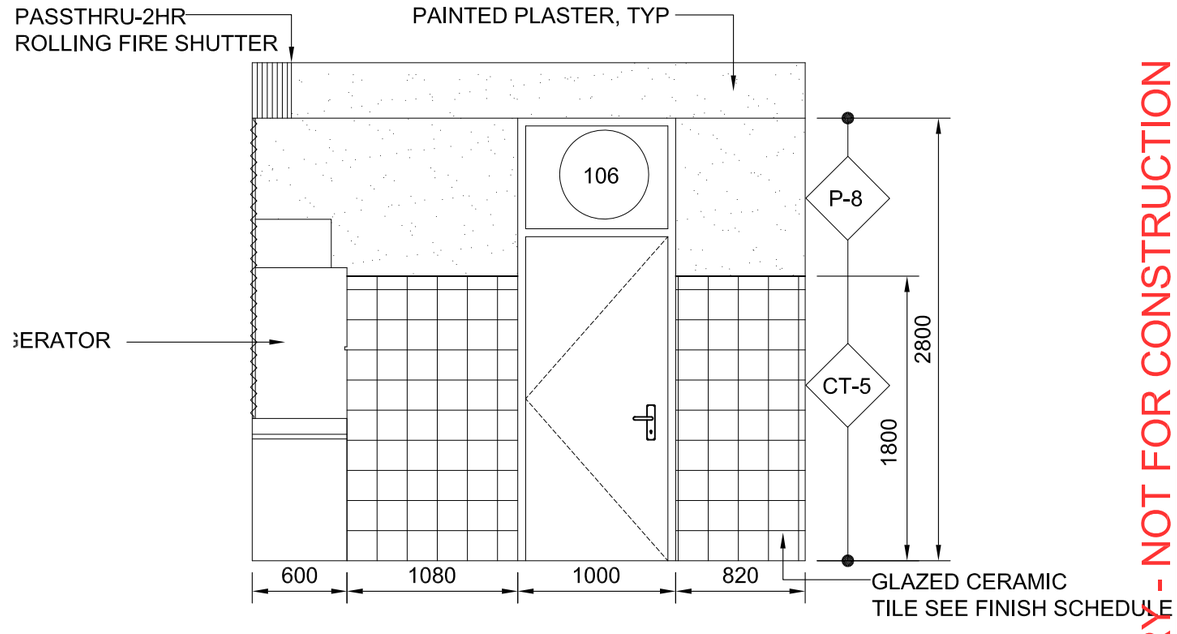

C | KITCHEN INTERIOR ELEVATION

A_A120 SCALE: 1:25

PRELIMINARY - NOT FOR CONSTRUCTION

REV	DATE	BY	SUB	APP	DESCRIPTION

DESIGNED P.HOPE
DRAWN WAHIDULLAH.Y
CHECKED P.HOPE
IN CHARGE D. WHEELER
DATE 05 DEC 2009

AFGHAN NATIONAL SECURITY FORCE
Comprehensive Plan for Facilities Development

MINISTRY OF INTERIOR (MoI) - AFGHAN NATIONAL POLICE
PROVINCIAL FIRE STATION TYPE-B

Kitchen Interior Elevation

SCALE AS SHOWN

PROJECT NO. AS SHOWN

A_A120

ROOM FINISH SCHEDULE

ROOM NO.	ROOM NAME	FLOOR MATERIAL	BASE MATERIAL	WALL MATERIAL	WALL FINISH	CEILING MATERIAL	CEILING FINISH	CEILING HEIGHT	DOOR & WINDOW FINISH MATERIAL	DOOR & WINDOW FINISH FINISH	REMARKS
100	VESTIBULE	TT–1	MT–1	P	P–1	P	P–3	3150	MTD	P–4	PROVIDE 1hr RATED WALL BTWN ENTRY AND STAIR
101	RECEPTION	TT–1	MT–1	P	P–8	P	P–3	3150	WD	P–5	
102	OPEN OFFICE	TT–1	MT–1	P	P–8	P	P–3	3150	WD	P–5	PROVIDE 2hr RATED WALL
103	OFFICE	CPT–1	–	P	P–7	P	P–3	3150	WD	P–5	PROVIDE 2hr RATED WALL BTWN OFFICE & STOR
104	COMMUNICATION	TT–1	MT–1	P	P–7	P	P–3	3150	WD	P–5	PROVIDE 1hr RATED WALL BTWN COMM & STAIR
105	OFFICE	CPT–1	–	P	P–7	P	P–3	3150	WD	P–5	
106	KITCHEN	TT–1	MT–1	CT–5	P–6	P	P–6	3150	WD	P–5	PROVIDE 2hr RATED WALL BTWN KITCHEN & DFAC
107	DINING AND TRAINING	CONC/S	–	P	P–7	P	P–3	3150	WD	P–5	PROVIDE 2hr RATED WALL
108	ELECTRICAL	CONC/S	–	P	P–1	P	P–6	3150	WD	P–5	
109	STORAGE	CONC/S	–	P	P–1	P	P–6	3150	WD	P–5	PROVIDE 1hr RATED WALL BTWN STOR & MECH
110	STORAGE	CONC/S	–	P	P–1	P	P–6	3150	WD	P–5	
111	MEN'S TOILET	CT–1	MT–1	CT–5	P–6	P	P–6	3150	WD	P–5	
112	WOMEN TOILET/H.C	CT–1	MT–1	CT–5	P–6	P	P–6	3150	WD	P–5	PROVIDE 1hr RATED WALL BTWN STOR & H.C W.C
113	CORRIDOR	TT–1	MT–1	P	P–1	P	P–3	3150	WD	P–5	
114	STAIR	TT–1	MT–1	P	P–8	P	P–6	3150	MTD	P–4	PROVIDE 1hr RATED WALL BTWN OFFICE & STAIRS
115	STAIR	TT–1	MT–1	P	P–8	P	P–6	3150	MTD	P–4	PROVIDE 1hr RATED WALL BTWN VEST & STAIRS
116	CUSTODIAL	CT–1	MT–1	CT–5	P–1	P	P–6	3150	WD	P–5	
117	HALL	CONC/S	–	P	P–1	P	P–3	3150	WD	P–5	
118	STORAGE	TT–1	MT–1	P	P–1	P	P–3	3150	WD	P–5	
119	STORAGE	TT–1	MT–1	P	P–1	P	P–3	3150	WD	P–5	
120	TRUCK BAY	CONC/S	–	P	P–1	EXPOSED	–	5800	MTD	P–4	
121	MAINTENANCE STORAGE	CONC/S	–	–	–	EXPOSED	–	5800	CHAN LINK	–	
122	EQUIPMENT WASH	CONC/S	–	P	P–1	P	P–3	3150	WD		
123	STORAGE	CONC/S	–	P	P–1	P	P–3	3150	WD	P–5	
124	MECHANICAL ROOM	CONC/S	–	P	P–1	P	P–6	3150	WD	P–5	PROVIDE 1hr RATED WALL BTWN MECH & STOR
125	WATER HEATER ROOM	CONC/S	–	P	P–1	P	P–6	3150	WD	P–5	PROVIDE 1hr RATED WALL BTWN ELH & KITCHEN
126	POLE	CONC/S	–	P	P–1	P	P–6	3150	–	–	PROVIDE 2hr RATED WALL BTWN POLE & OFFICE
127	POLE	CONC/S	–	P	P–1	P	P–6	3150	–	–	PROVIDE 2hr RATED WALL BTWN POLE & OFFICE
200	OFFICER'S	CPT–1	–	P	P–8	P	P–6	3150	WD	P–5	PROVIDE 1hr RATED WALL BTWN OFFICE & FITNESS
201	BUNK ROOMS	TT–1	MT–1	P	P–9	P	P–6	3150	WD	P–5	
202	FITNESS	TT–1	MT–1	P	P–9	P	P–6	3150	WD	P–5	PROVIDE 1hr RATED WALL BTWN FITNESS & BUNK
203	MWR	TT–1	MT–1	P	P–1	P	P–6	3150	WD	P–5	PROVIDE 1hr RATED WALL BTWN MWR & BUNK
204	PRAYER	CPT–1	–	P	P–8	P	P–6	3150	WD	P–5	
205	STORAGE	CONC/S	–	P	P–1	P	P–3	3150	MTD	P–4	
206	STORAGE	CONC/S	–	P	P–1	P	P–3	3150	MTD	P–4	PROVIDE 2hr RATED WALL
207	ABLUTION	CT–1	MT–1	CT–5	P–8	P	P–6	3150	WD	P–5	
208	CUSTODIAL	CT–1	MT–1	CT–5	P–1	P	P–6	3150	WD	P–5	
209	SHOWER	CT–1	MT–1	CT–5	P–6	P	P–6	1800	CURTAIN	P–5	
210	TOILET	TT–1	MT–1	CT–5	P–6	P	P–6	1800	WD	P–5	
211	STAIRS	TT–1	MT–1	P	P–8	P	P–3	3150	MTD	P–4	PROVIDE 1hr RATED WALL BTWN STAIR & PRAYER
212	STAIRS	TT–1	MT–1	P	P–8	P	P–3	3150	MTD	P–4	PROVIDE 1hr RATED WALL BTWN STAIR & BUNK
215	POLE	CONC/S	–	P	P–1	P	P–6	3150	–	–	PROVIDE 2hr RATED WALL
216	POLE	CONC/S	–	P	P–1	P	P–6	3150	–	–	PROVIDE 2hr RATED WALL

PRELIMINARY - NOT FOR CONSTRUCTION

REV	DATE	BY	SUB	APP	DESCRIPTION
					XXX

DESIGNED BOUZA
DRAWN WAHIDULLAH.Y
CHECKED P.HOPE
IN CHARGE D. WHEELER
DATE 05 DEC 2009

AFGHAN NATIONAL SECURITY FORCE
Comprehensive Plan for Facilities Development

MINISTRY OF INTERIOR (MoI) - AFGHAN NATIONAL POLICE
PROVINCIAL FIRE STATION TYPE-B

ROOM FINISH SCHEDULE

SCALE AS SHOWN

PROJECT NO. –

A_A121

GENERAL FINISH NOTES/TYPICAL COLORS & MATERIAL SELECTION

FLOORING

CARPET (CPT)
CPT–1 AFGHAN TURKMAN PRODUCT; 6000 x 12000 OR EQUIVALENT
CPT–2 ARABIC CARPET; IT IS AVAILABLE AS PER ROOM DIMENSION
CPT–3 XX

CONC/S CONCRETE SEALED AND HARDENED WITH BROOM FINISH

TERRAZZO TILE (TT)
TT–1 AFGHAN LOCAL PRODUCT; 300mm X 300mm WITH SPECIAL POLISH

ENTRY MAT (MAT)
MAT–1 REESE PERFEC CLEAN ALUMINUM HINGE MAT; RECESSED FRAME WITH NO. 546 CARPET INSERTS, METAL FINISH: MIL ALUMINUM; CARPET INSERTS: MAUVE 8616

CERAMIC TILE (CT)
CT–1 R.A.K CERAMIC UAE; 300mm X 300mm UNPOLISHED PORCELAIN
CT–2 AFGHAN LOCAL PRODUCT; 300mm X 600mm POLISHED PORCELAIN
CT–3 AFGHAN LOCAL PRODUCT; 600mm X 1000mm UNPOLISHE PORCELAIN
CT–4 R.A.K CERAMIC UAE;#4/700RBEM–10 200mm X 200mm UNPOLISHE PORCELAIN
CT–5 R.A.K CERAMIC UAE;# 600CPAR–2 200mm X 300mm UNPOLISHE PORCELAIN

BASE TREATMENTS

MARBLE TILE (MT)
MT–1 AFGHAN LOCAL PRODUCT; 75mm X 100mm CROSS SHEEN PORCELAIN MARBLE TILE COVE BASE; #AXXX EMPRESS BLACK

WALL FINISHES

PAINT/EPOXY PAINT (P/EP):
P–1 BRIGHTO PAINTS; # 42 SAND STONE SUPER EMULSION
P–2 BRIGHTO PAINTS; # 127 CAMEO FOR EXTERNAL USE WEATHER SHIELD
P–3 BRIGHTO PAINTS; # X LATEX FOR WATER BASE WALL
P–4 BRIGHTO METALLIC ENAMEL; # 3 LIGHT GRAY SUITABLE FOR USE ON ALL TYPES OF INTERIOR AND EXTERIOR WOOD AND METAL SURFACES.
P–5 BRIGHTO METALLIC ENAMEL; # 42 ASH WHITE SUITABLE FOR USE ON ALL TYPES OF INTERIOR AND EXTERIOR WOOD AND METAL SURFACES.
P–6 BRIGHTO PAINTS; # 12 OFF WHITE
P–7 BRIGHTO PAINTS; #70 ROSE WHITE
P–8 BRIGHTO PAINTS; #69 LILY WHITE
P–9 BRIGHTO PAINTS; #40 PEACH CREAM

CERAMIC TILE (CT):
CT–4 R.A.K CERAMIC UAE;#4/700RBEM–10 200mm X 200mm UNPOLISHE PORCELAIN
CT–5 R.A.K CERAMIC UAE; # 600CPAR–2 200mm X 300mm UN–POLISHE

CEILING FINISHES

GWB GYPSUM WALL BOARD
DONGFENG BOARD; WITH DIMENSION OF 1200 x 2400 mm AND THICK 3/8
TOTAL WEIGHT APROX. 21KG

PAINTED CEILINGS (P)
P–1 BRIGHTO PAINT; # 12 OFF WHITE

MISCELLANEOUS SURFACES

LAMINATE SURFACES (LAM)
LAM–1 FORMICA; 953–58 ICE WHITE (BREAK ROOMS AND FMT COUNTERTOPS)
LAM–2 FORMICA; 7481–58 NATURAL BIRCH (BREAK ROOMS AND FMT– BASE AND UPPER CABINETS)
LAM–3 FORMICA; 1485–58 CHROME YELLOW (ELEVATOR)

TOILET PARTITIONS (TP)
NOT USED

SIGNAGE (S)
S–1 BACKGROUND COLOR: MATCH P–3, TEXT: WHITE

INTERIOR DOOR AND WINDOW FRAMES
P–4 BRIGHTO ; #3 LIGHT GRAY

INTERIOR WOOD DOORS AND TRIM
WHITE OAK, CLEAR FINISH, NO STAIN

MOVEABLE WALL (MW)
NOT USED

FINISH SCHEDULE ABBREVIATIONS

AFF	ABOVE FINISHED FLOOR	LAM	PLASTIC LAMINATE
ALSF	ALUMINUM STOREFRONT SYSTEM	MANUF	BY MANUFACTURER
ATC	ACOUSTIC TILE CEILING	MAT	ENTRY MAT
CB	CEMENT BOARD	MR	MOISTURE RESISTANT
CONC/S	CONCRETE SEALED AND HARDENED WITH BROOM FINISH	MTL	METAL PANEL
		MW	MOVABLE WALL
		NA	NOT APPLICABLE
		P	PAINT
CPT	CARPET	PREFIN	PREFINISHED
CT	CERAMIC TILE	RB	RESILIENT BASE
EP	EPOXY PAINT	RBP	RACQUETBALL PANEL
EXPOSED	EXPOSED STRUCTURE	VCT	VINYL COMPOSITION TILE
GN	GENERAL NOTE	MT	MARBLE TILE
GWB	GYPSUM WALL BOARD	MTD	METALLIC DOOR
HM	HOLLOW METAL	WD	WOOD DOOR
		TT	TERRAZZO TILE

GENERAL NOTES

1. THE MANUFACTURER'S NAMES AND THEIR PRODUCTS REFERENCED ONLY INDICATE THE COLOR, TEXTURE, AND PATTERN REQUIRED FOR THE MATERIALS LISTED. THE PRODUCTS FURNISHED SHALL MEET THE COLOR, TEXTURE, AND PATTERN INDICATED AS WELL AS THE MATERIAL QUALITY AND PERFORMANCE SPECIFIED IN THE APPLICABLE TECHNICAL SPECIFICATIONS. THE USE OF MANUFACTURER'S NAMES AND PRODUCTS DO NOT PRECLUDE THE USE OF OTHER MANUFACTURER'S PRODUCTS OF APPROVED EQUAL COLOR, TEXTURE, AND/OR PATTERN IF ALL OTHER REQUIREMENTS ARE MET.
2. ALL VISIBLE GRILLES, DIFFUSERS, AND OTHER MECHANICAL RELATED FINISH OPENING DEVICES INCLUDING FIRE ALARMS SHALL BE PAINTED TO MATCH COLOR OF ADJACENT SURFACE.
3. REFER TO APPROPRIATE ARCHITECTURAL DRAWINGS AND DETAILS TO PROPERLY ASSESS THE FULL EXTENT OF WORK REQUIRED. SPECIFICALLY REFER TO THE REFLECTED CEILING PLANS AND BUILDING SECTIONS TO DETERMINE HEIGHTS OF REQUIRED WALL MATERIALS, SPECIAL CONDITIONS AND STRUCTURES, ETC.
4. REFER TO EXTERIOR ELEVATIONS FOR EXTERIOR FINISH SELECTIONS.
5. INFILL FLOOR AT SLAB RECESSES NOT TO RECEIVE CERAMIC TILE WITH CONCRETE LEVEL WITH ADJACENT FLOOR SURFACES PRIOR TO APPLYING FLOOR FINISH.
6. WALL AND CEILING GWB SURFACES SHALL BE PAINTED WITH FLAT FINISH, TRIM SHALL BE SEMI–GLOSS.
7. INSTALL PLASTIC BUMPER RAILS AND CORNER GUARDS AT MAIN CORRIDORS
8. INTERIOR SURFACE OF EXTERIOR METAL DOORS AND FRAMES SHOULD COMPLY WITH P–4

NOTE:
NOT ALL FINISHES APPLY TO ALL BUILDINGS.

PRELIMINARY - NOT FOR CONSTRUCTION

REV	DATE	BY	SUB	APP	DESCRIPTION
					XXX

DESIGNED BOUZA
DRAWN WAHIDULLAH.Y
CHECKED P.HOPE
IN CHARGE D. WHEELER
DATE 05 DEC 2009

AFGHAN NATIONAL SECURITY FORCE
Comprehensive Plan for Facilities Development
MINISTRY OF INTERIOR (MoI) - AFGHAN NATIONAL POLICE PROVINCIAL FIRE STATION TYPE-B
ROOM COLOR AND MATERIAL SELECTION

SCALE AS SHOWN
PROJECT NO. –
A_A122

N:\ANP FIRE STATIONS\~99%NTIAL_FSsA&B_091205\FSB_99%NTIAL_Drwgs\nACAD\A_A122 Color And Materials Selections.dwg 02/13/2010 12:09pm CAD_9

DOOR SCHEDULE

DOOR No.	DIMENSION			DOOR TYPE	DOOR MAT.	FRAME MAT.	HARDWARE	THRESHOLD	FIRE RATED	MATERIAL
	WIDTH	HGT.	THK.							
100	PR914	2100	45	1	MTL	HM	HW-X	ALUM	–	EXTERIOR DOOR WITH WEATHER STRIPPING
101	PR914	2100	45	1	WD	HM	HW-X	ALUM	–	PAINTED WOOD IN METAL FRAME
102	914	2100	45	2	MTL	HM	HW-X	–	–	METAL DOOR WITH DOOR CLOSER AND WEATHER STRIPING
103	914	2100	45	3	WD	HM	HW-X	–	–	PAINTED WOOD IN METAL FRAME
104	914	2100	45	3	WD	HM	HW-X	–	–	PAINTED WOOD IN METAL FRAME
105	914	2100	45	3	WD	HM	HW-X	–	B	PAINTED WOOD IN METAL FRAME
106	914	2100	45	3	WD	HM	HW-X	–	B	PAINTED WOOD IN METAL FRAME
107	914	2100	45	3	WD	HM	HW-X	–	B	PAINTED WOOD IN METAL FRAME
108	813	2100	45	5	WD	HM	HW-X	–	B	PAINTED WOOD IN METAL FRAME W/LOUVER
109	914	2100	45	5	WD	HM	HW-X	–	B	PAINTED WOOD IN METAL FRAME W/LOUVER
110	914	2100	45	5	WD	HM	HW-X	–	B	PAINTED WOOD IN METAL FRAME W/LOUVER
111	914	2100	45	3	WD	HM	HW-X	–	–	PAINTED WOOD IN METAL FRAME
112	914	2100	45	3	WD	HM	HW-X	–	–	PAINTED WOOD IN METAL FRAME
113	914	2100	45	3	WD	HM	HW-X	–	–	PAINTED WOOD IN METAL FRAME
114	914	2100	45	2	MTL	HM	HW-X	–	B	METAL DOOR WITH DOOR CLOSER AND WEATHER STRIPING
115	914	2100	45	2	MTL	HM	HW-X	–	B	METAL DOOR WITH DOOR CLOSER AND WEATHER STRIPING
116	813	1800	45	5	WD	HM	HW-X	–	–	PAINTED WOOD IN METAL FRAME
117	914	2100	45	3	WD	HM	HW-X	–	–	PAINTED WOOD IN METAL FRAME
118	914	2100	45	5	WD	HM	HW-X	–	B	PAINTED WOOD IN METAL FRAME
119	914	2100	45	5	WD	HM	HW-X	–	B	PAINTED WOOD IN METAL FRAME
120	914	2100	45	2	MTL	HM	HW-X	–	–	METAL DOOR WITH DOOR CLOSER AND WEATHER STRIPING W/VISION LITE
121	914	2100	–	8	CHAIN LINK	–	HW-X	–	–	CHAIN LINK WITH LATCH
123	813	2100	45	5	WD	HM	HW-X	–	B	PAINTED WOOD IN METAL FRAME
124	914	2100	45	9	MTL	HM	HW-X	ALUM	–	METAL DOOR WITH WEATHER STRIPING & LOUVER
125	914	2100	45	3	WD	HM	HW-X	–	B	PAINTED WOOD IN METAL FRAME
126	914	2100	45	3	WD	HM	HW-X	–	B	PAINTED WOOD DOOR IN METAL FRAME
127	914	2100	45	3	WD	HM	HW-X	–	B	PAINTED WOOD DOOR IN METAL FRAME
128	813	1800	45	5	WD	HM	HW-X	ALUM	–	WOOD DOOR w/LOUVER
129	813	1800	45	5	WD	HM	HW-X	ALUM	–	WOOD DOOR w/LOUVER
130	813	1800	45	5	WD	HM	HW-X	ALUM	–	WOOD DOOR w/LOUVER
131	914	2100	45	7	MTL	HM	HW-X	ALUM	–	METAL DOOR WITH DOOR CLOSER AND WEATHER STRIPING
132	914	2100	45	7	MTL	HM	HW-X	ALUM	–	METAL DOOR WITH DOOR CLOSER AND WEATHER STRIPING
133	914	2100	45	7	MTL	HM	HW-X	ALUM	–	METAL DOOR WITH DOOR CLOSER AND WEATHER STRIPING
134	914	2100	45	3	WD	HM	HW-X	–	–	PAINTED WOOD DOOR IN METAL FRAME
135	914	2100	45	2	MTL	HM	HW-X	–	–	METAL DOOR WITH DOOR CLOSER AND WEATHER STRIPING W/VISION LITE
136	914	2100	45	2	MTL	HM	HW-X	–	–	METAL DOOR WITH DOOR CLOSER AND WEATHER STRIPING w/VISION LITE
137	914	2100	45	2	MTL	HM	HW-X	–	–	METAL DOOR WITH DOOR CLOSER AND WEATHER STRIPING w/VISION LITE
138	914	2100	–	8	CHAIN LINK	–	HW-X	–	–	CHAIN LINK WITH LATCH
139	4300	4300	–	6	ALUM	–	HW-X	–	–	ROLL UP DOOR WITH COILING TYP,
140	914	2100	45	3	WD	HM	HW-X	–	B	PAINTED WOOD IN METAL FRAME
200	914	2100	45	5	WD	HM	HW-X	–	B	PAINTED WOOD IN METAL FRAME w/LOUVER
202	914	2100	45	3	WD	HM	HW-X	–	B	PAINTED WOOD IN METAL FRAME
203	914	2100	45	3	WD	HM	HW-X	–	B	PAINTED WOOD IN METAL FRAME
204	914	2100	45	3	WD	HM	HW-X	–	–	PAINTED WOOD IN METAL FRAME
205	914	2100	45	5	WD	HM	HW-X	ALUM	–	WOOD DOOR w/LOUVER
206	914	2100	45	5	WD	HM	HW-X	ALUM	–	WOOD DOOR w/LOUVER
208	813	1800	45	5	WD	HM	HW-X	–	B	PAINTED WOOD DOOR IN METAL FRAME W/LOUVER
209	914	2100	45	3	WD	HM	HW-X	–	–	PAINTED WOOD IN METAL FRAME
211	914	2100	45	7	MTL	HM	HW-X	ALUM	B	METAL DOOR WITH STRIPPING & VISION LITE
212	914	2100	45	7	MTL	HM	HW-X	ALUM	B	METAL DOOR WITH STRIPPING & VISION LITE
213	914	2100	45	7	MTL	HM	HW-X	–	–	METAL DOOR WITH STRIPPING
214	914	2100	45	7	MTL	HM	HW-X	–	–	METAL DOOR WITH STRIPPING
215	813	1800	45	2	MTL	HM	HW-X	–	B	METAL DOOR WITH STRIPPING
216	914	2100	45	3	WD	HM	HW-X	–	B	PAINTED WOOD IN METAL FRAME
217	914	2100	45	3	WD	HM	HW-X	–	B	PAINTED WOOD IN METAL FRAME
218	813	1800	45	4	WD	HM	HW-X	–	–	PAINTED WOOD IN METAL FRAME w/LOUVER
219	813	1800	45	4	WD	HM	HW-X	–	–	PAINTED WOOD IN METAL FRAME
220	813	1800	45	4	WD	HM	HW-X	–	–	PAINTED WOOD IN METAL FRAME
221	813	1800	45	4	WD	HM	HW-X	–	–	PAINTED WOOD IN METAL FRAME
300	914	2100	45	2	MTL	HM	HW-X	ALUM	–	METAL DOOR WITH DOOR CLOSER AND WEATHER STRIPING
301	914	2100	45	2	MTL	HM	HW-X	ALUM	–	METAL DOOR WITH DOOR CLOSER AND WEATHER STRIPING

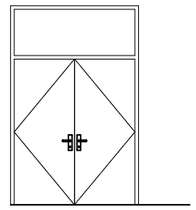

1 DOOR
A_A123 SCALE:

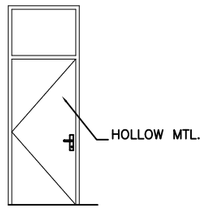

2 DOOR
A_A123 SCALE:

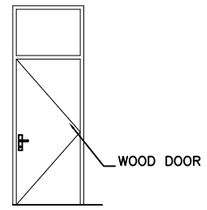

3 DOOR
A_A123 SCALE:

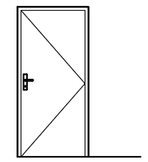

4 DOOR
A_A123 SCALE:

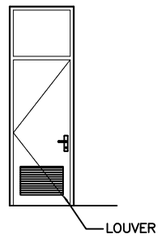

5 DOOR
A_A123 SCALE:

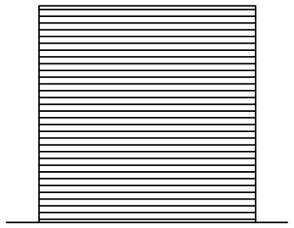

6 DOOR
A_A123 SCALE:

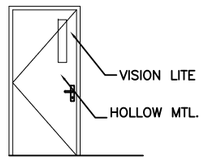

7 DOOR
A_A123 SCALE:

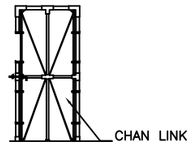

8 DOOR
A_A123 SCALE:

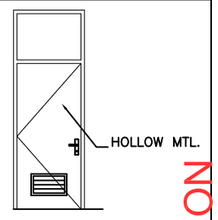

9 DOOR
A_A123 SCALE:

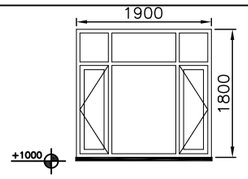

A WINDOW
A_A123 SCALE:

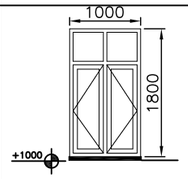

B WINDOW
A_A123 SCALE:

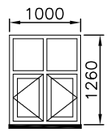

C WINDOW
A_A123 SCALE:

1 LOUVER
A_A123 SCALE:

WINDOW SCHEDULE

WINDOW NUMBER	DIMENSION		WINDOW MAT.	WINDOW TYPE	OPENING SYSTEM	DESCRIPTION
	WIDTH	HEIGHT				
WA	1900	1800	ALUM	A	SLIDER	5MM GLASS ALUM CONSTRUCTION AND FIXED INSECT METAL SCREEN
WB	1400	1800	ALUM	B	SLIDER	5MM GLASS ALUM CONSTRUCTION AND FIXED INSECT METAL SCREEN
WC	1000	1260	ALUM	C	SLIDER	5MM GLASS ALUM CONSTRUCTION AND FIXED INSECT METAL SCREEN
WD	1000	725	ALUM	C	SLIDER	5MM GLASS ALUM CONSTRUCTION AND FIXED INSECT METAL SCREEN
WE	1000	1800	ALUM	B	SLIDER	5MM GLASS ALUM CONSTRUCTION AND FIXED INSECT METAL SCREEN

LOUVER SCHEDULE

WINDOW NUMBER	DIMENSION		LOUVER MAT.	LOUVER TYPE		DESCRIPTION
	WIDTH	HEIGHT				
L1	1100	800	ALUM	1		METAL LOUVER WEATHER RESISTANT WITH BIRD SCREEN
L2	800	800	ALUM	1		METAL LOUVER WEATHER RESISTANT WITH BIRD SCREEN

NOTES:

1. FOR HARDWARE SET DESCRIPTION SEE SPECIFICATIONS SECTION 08710 PARAGRAPH 3.5.
2. CONTRACTOR TO USE LOCALLY FABRICATED DOORS AND WINDOWS.

PRELIMINARY - NOT FOR CONSTRUCTION

REV	DATE	BY	SUB	APP	DESCRIPTION

DESIGNED T. LODGE
DRAWN WAHIDULLAH.Y
CHECKED P.HOPE
IN CHARGE D. WHEELER
DATE 05 DEC 2009

AFGHAN NATIONAL SECURITY FORCE
Comprehensive Plan for Facilities Development
MINISTRY OF INTERIOR (MoI) - AFGHAN NATIONAL POLICE
PROVINCIAL FIRE STATION TYPE-B

DOOR & WINDOW SCHEDULE

SCALE AS SHOWN
PROJECT NO. –

A_A123

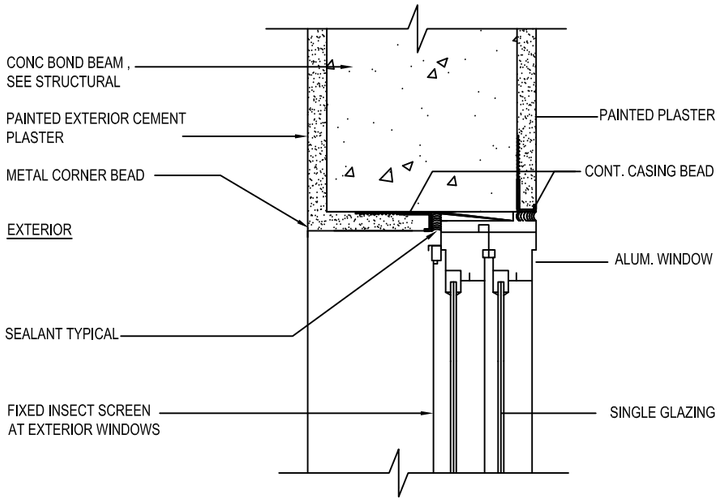

1 WINDOW HEAD (JAMB) DETAIL

A_A124 REF. SCALE: N.T.S

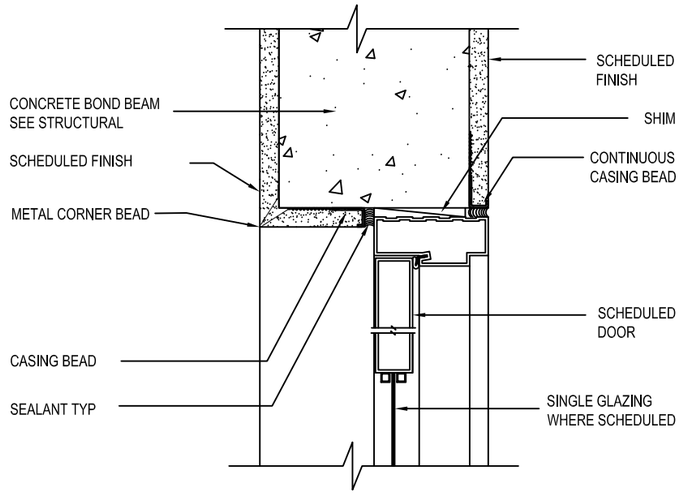

3 DOOR HEAD (JAMB) DETAIL

A_A124 REF. SCALE: N.T.S

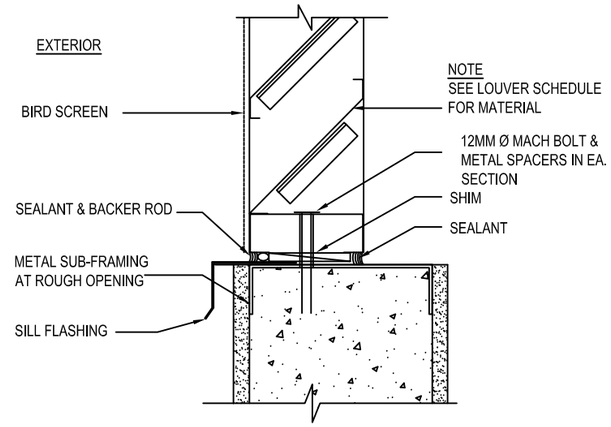

5 LOUVER SILL (HEAD) DETAIL

A_A124 REF. SCALE: N.T.S

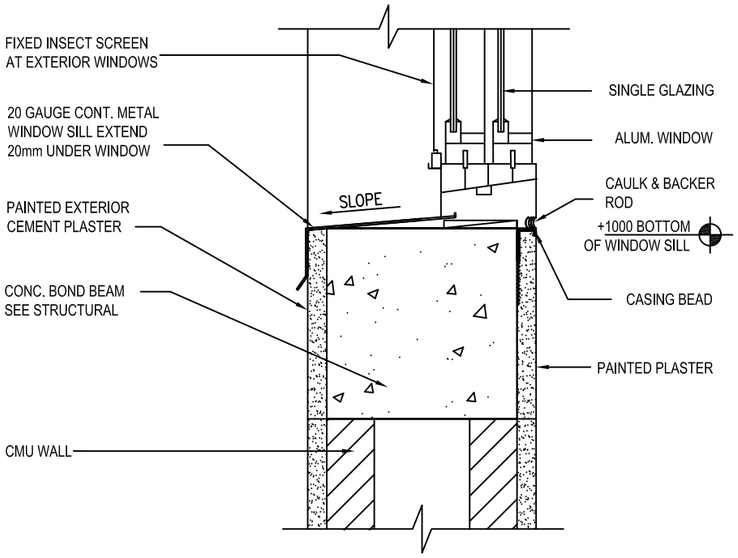

2 WINDOW SILL DETAIL

A_A124 REF. SCALE: N.T.S

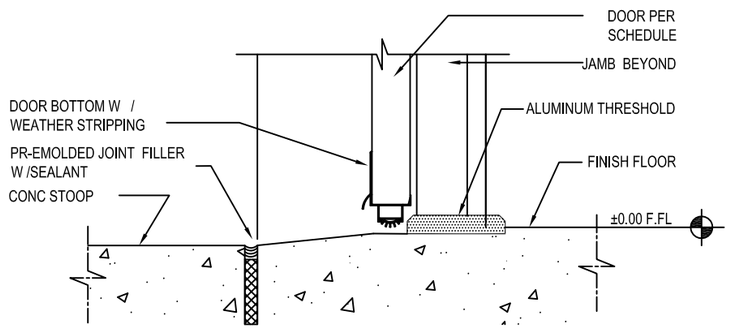

4 EXTERIOR DOOR THRESHOLD

A_A124 REF. SCALE: N.T.S

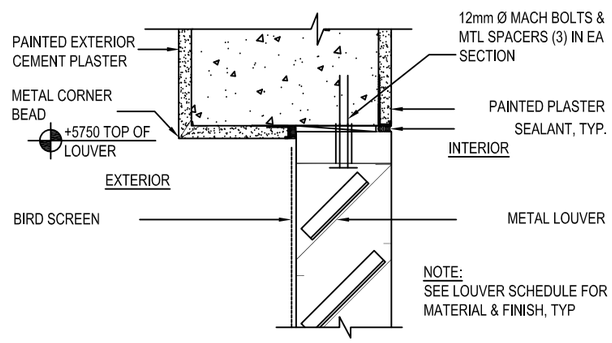

6 LOUVER HEAD JAMB DETAL

A_A124 REF. SCALE: N.T.S

PRELIMINARY - NOT FOR CONSTRUCTION

REV	DATE	BY	SUB	APP	DESCRIPTION

DESIGNED P.HOPE
DRAWN WAHIDULLAH.Y
CHECKED P.HOPE
IN CHARGE D. WHEELER
DATE 05 DEC 2009

AFGHAN NATIONAL SECURITY FORCE
Comprehensive Plan for Facilities Development
MINISTRY OF INTERIOR (MoI) - AFGHAN NATIONAL POLICE
PROVINCIAL FIRE STATION - TYPE-B

Door And Window Details

SCALE AS SHOWN
PROJECT NO. –

A_A124

N:\ANP FIRE STATIONS\~99290NTIAL_FSs\ABS_091205\FS9_9929NTIAL_Drwgs\n\CAD\A_A124 Door and Window DetailS.dwg 01/28/2010 3:51pm CAD_9

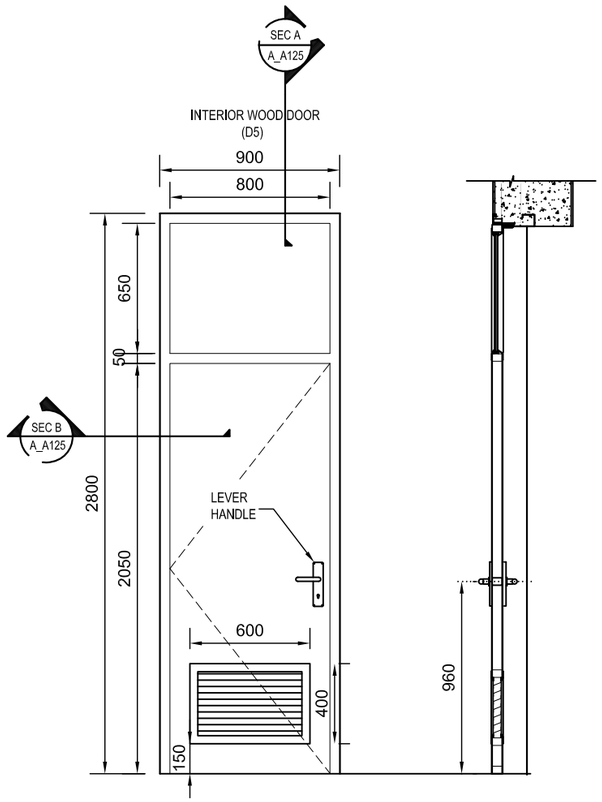

1 DOOR ELEVATION & SECTION A
A_A125 REF. SCALE: 1:10

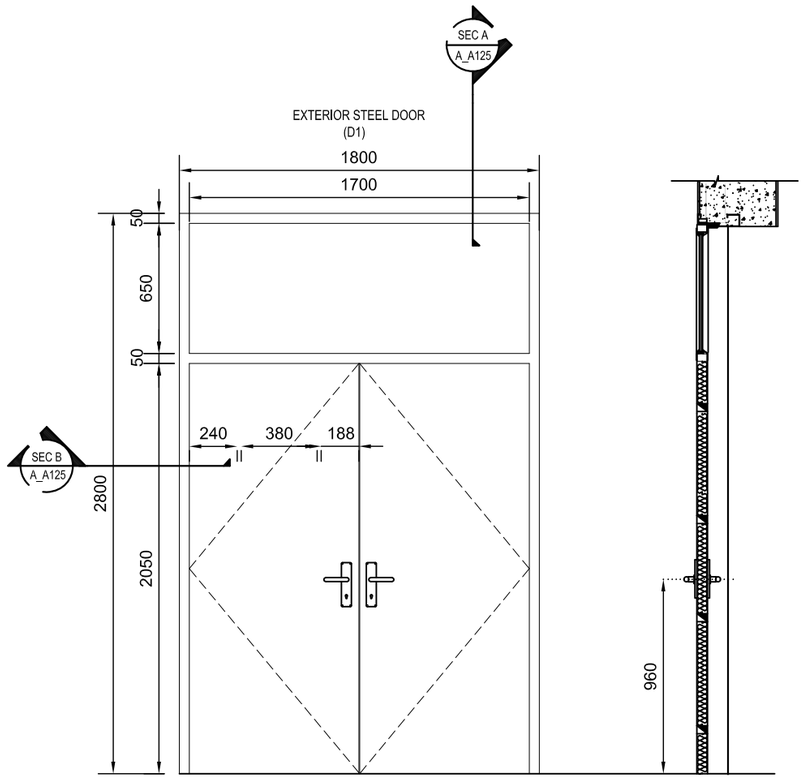

3 DOOR ELEVATION & SECTION A
A_A125 REF. SCALE: 1:10

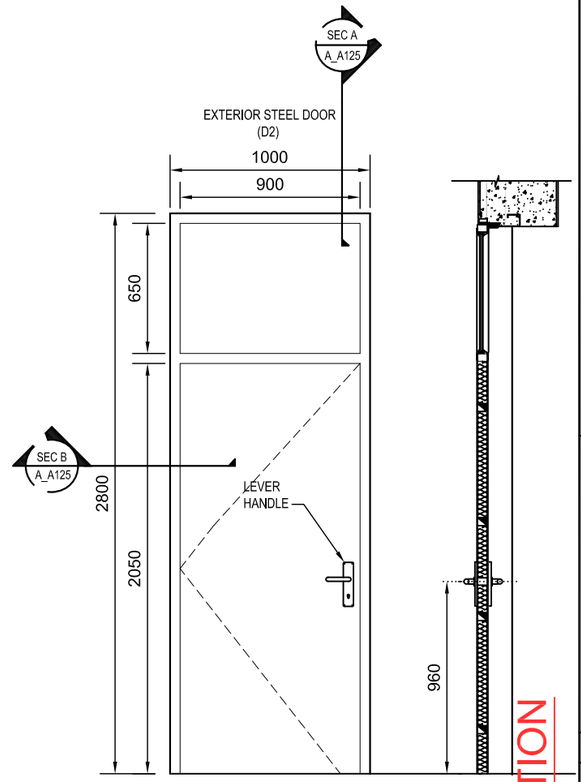

5 DOOR ELEVATION & SECTION A
A_A125 REF. SCALE: 1:10

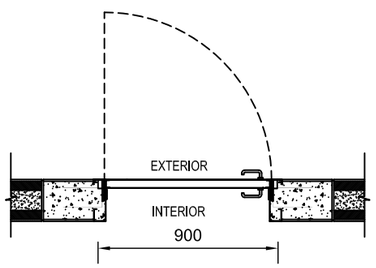

2 SECTION - B
A_A125 REF. SCALE: 1:10

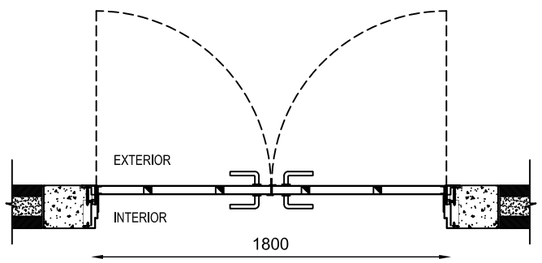

4 SECTION - B
A_A125 REF. SCALE: 1:10

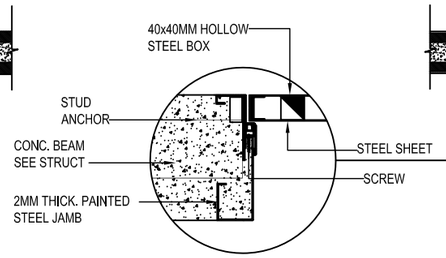

7 3D SECTION FOR STEEL DOOR
A_A125 REF. SCALE: 1:10

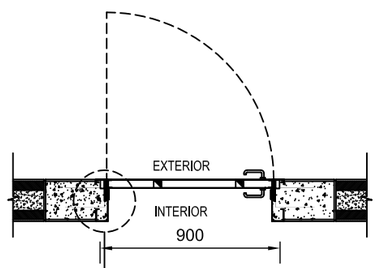

6 SECTION - B
A_A125 REF. SCALE: 1:10

SCALE: 1:10

PRELIMINARY - NOT FOR CONSTRUCTION

REV	DATE	BY	SUB	APP	DESCRIPTION

DESIGNED P.HOPE
DRAWN WAHIDULLAH.Y
CHECKED P.HOPE
IN CHARGE D. WHEELER
DATE 05 DEC 2009

AFGHAN NATIONAL SECURITY FORCE
Comprehensive Plan for Facilities Development
MINISTRY OF INTERIOR (MoI) - AFGHAN NATIONAL POLICE
PROVINCIAL FIRE STATION TYPE - B

Door Elevation, Section & Details

SCALE
AS SHOWN

PROJECT NO.
–

A_A 125

LEGEND:

1– ONE HOUR FIRE RATED WALL
2– TWO HOUR FIRE RATED WALL
3– COMMON PATH OF TRAVEL
4– ISOLATED EXIT DOOR LOCATION
5– FIRE EXTINGUISHER
6– EXIT SIGEN

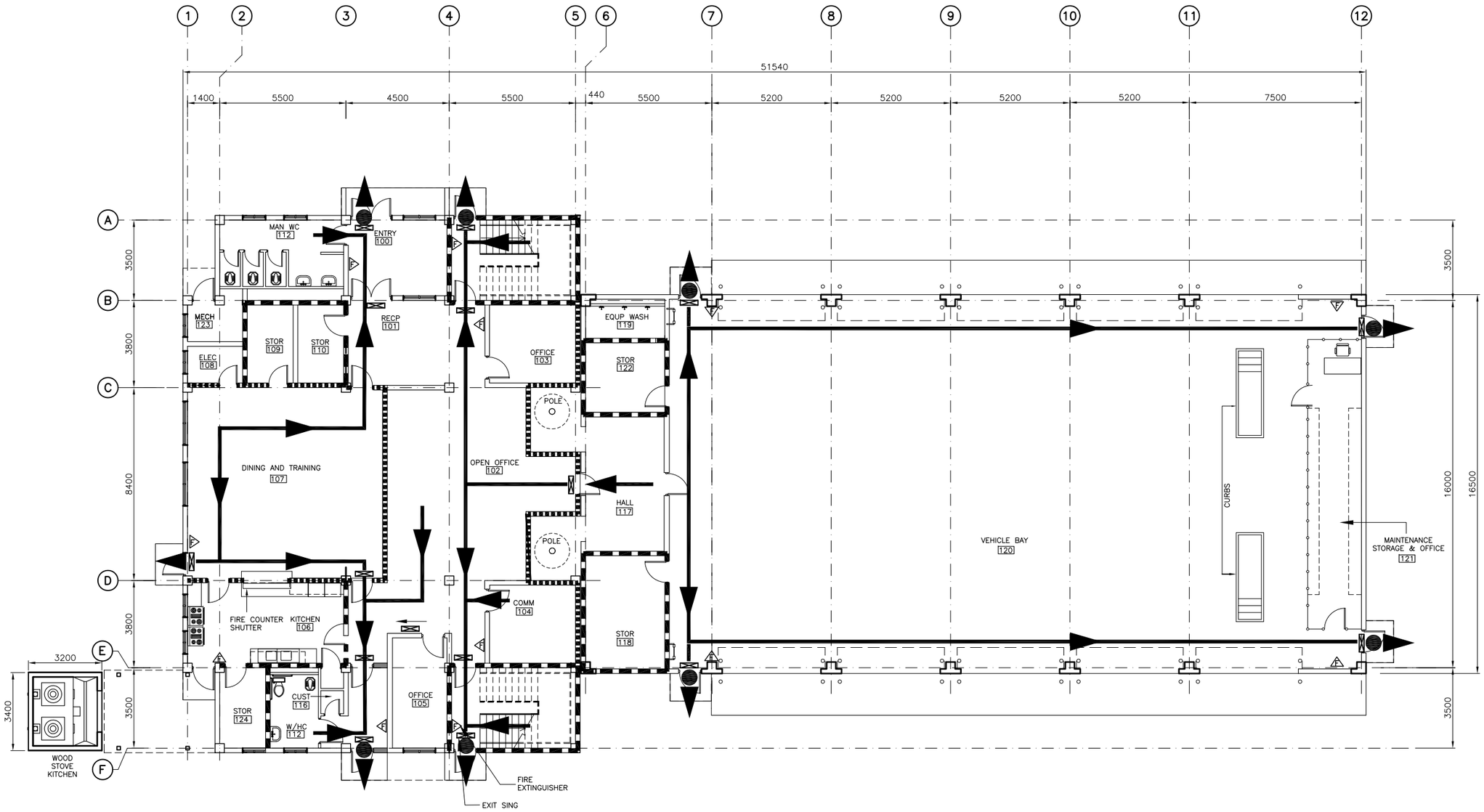

1 | FIRST FLOOR LIFE SAFETY PLAN
A_A126 | SCALE: 1:100

1M 0 5M
SCALE 1:100

PRELIMINARY - NOT FOR CONSTRUCTION

AFGHAN NATIONAL SECURITY FORCE
Comprehensive Plan for Facilities Development

MINISTRY OF INTERIOR (MoI) - AFGHAN NATIONAL POLICE
PROVINCIAL FIRE STATION TYPE-B

First Floor Life Safety Plan

DESIGNED T. LODGE
DRAWN ABDUL BASIR
CHECKED T. LODGE
IN CHARGE D. WHEELER
DATE 05 DEC 2009

REV DATE BY SUBAPP DESCRIPTION

SCALE AS SHOWN
PROJECT NO. AS SHOWN
A_A126

LEGEND:

1– ONE HOUR FIRE RATED WALL
2– TWO HOUR FIRE RATED WALL
3– COMMON PATH OF TRAVEL
4– ISOLATED EXIT DOOR LOCATION
5– FIRE EXTINGUISHER
5– EXIT

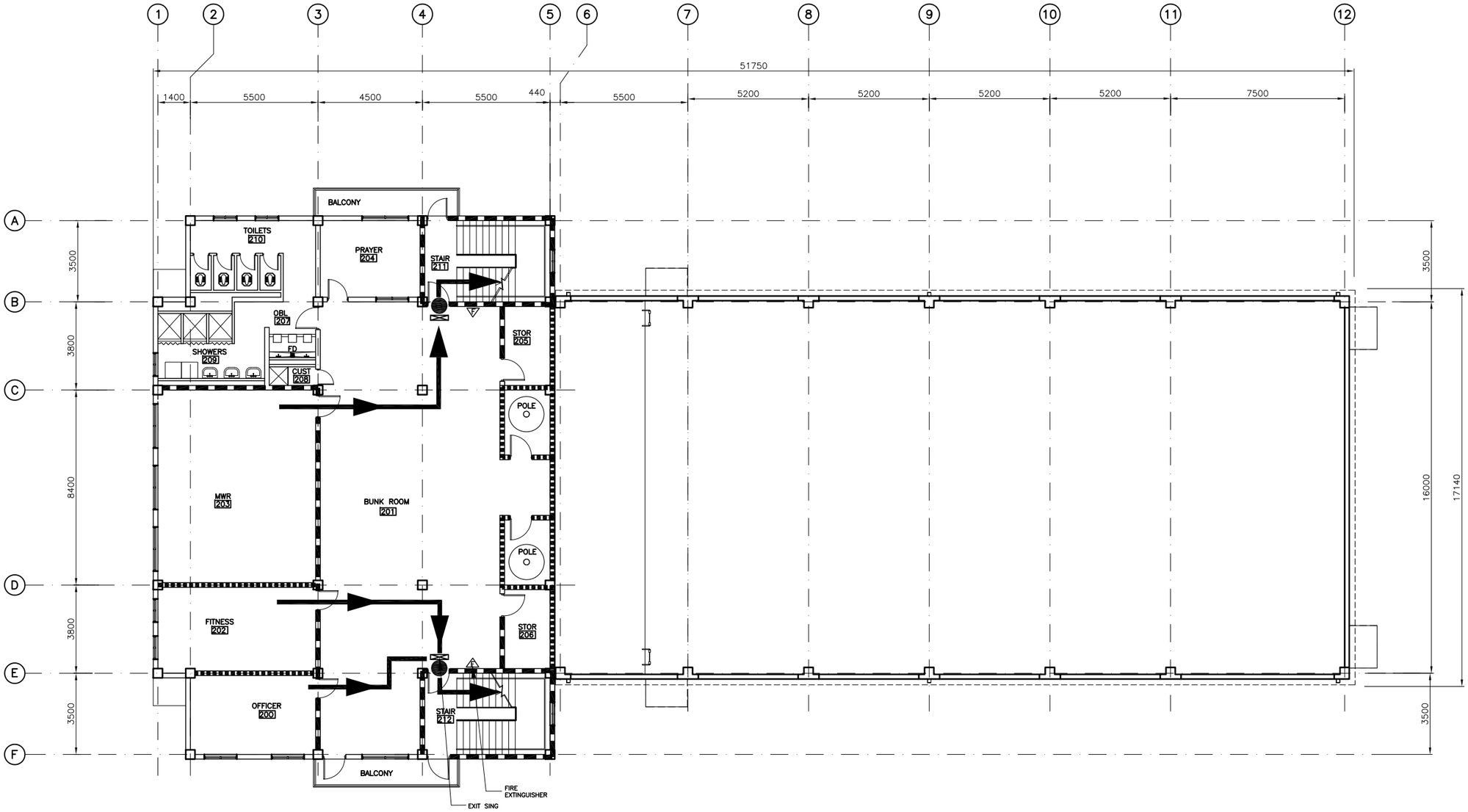

1 | SECOND FLOOR LIFE SAFETY PLAN
A_A127 | SCALE: 1:100

1M 0 5M
SCALE 1:100

PRELIMINARY - NOT FOR CONSTRUCTION

REV	DATE	BY	SUB	APP	DESCRIPTION

DESIGNED T. LODGE
DRAWN ABDUL BASIR
CHECKED T. LODGE
IN CHARGE D. WHEELER
DATE 05 DEC 2009

AFGHAN NATIONAL SECURITY FORCE
Comprehensive Plan for Facilities Development
MINISTRY OF INTERIOR (MoI) - AFGHAN NATIONAL POLICE
PROVINCIAL FIRE STATION TYPE-B

Second Floor Life Safety Plan

SCALE AS SHOWN
PROJECT NO. AS SHOWN
A_A127

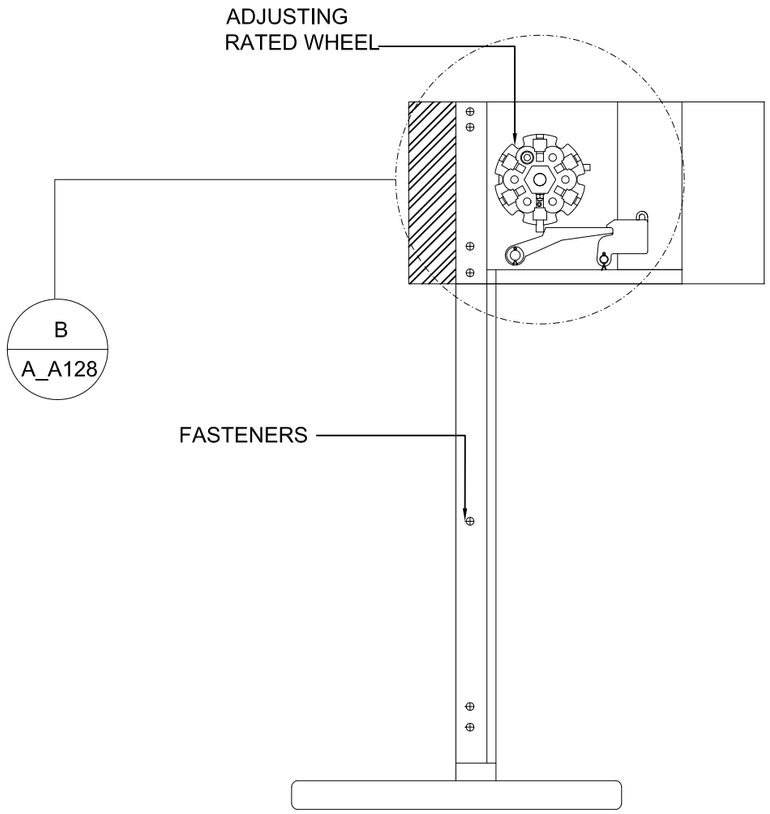

A | PASSTHRU ROLLING RATED SHUTTER SECTION
A_A128 | SCALE: N.T.S

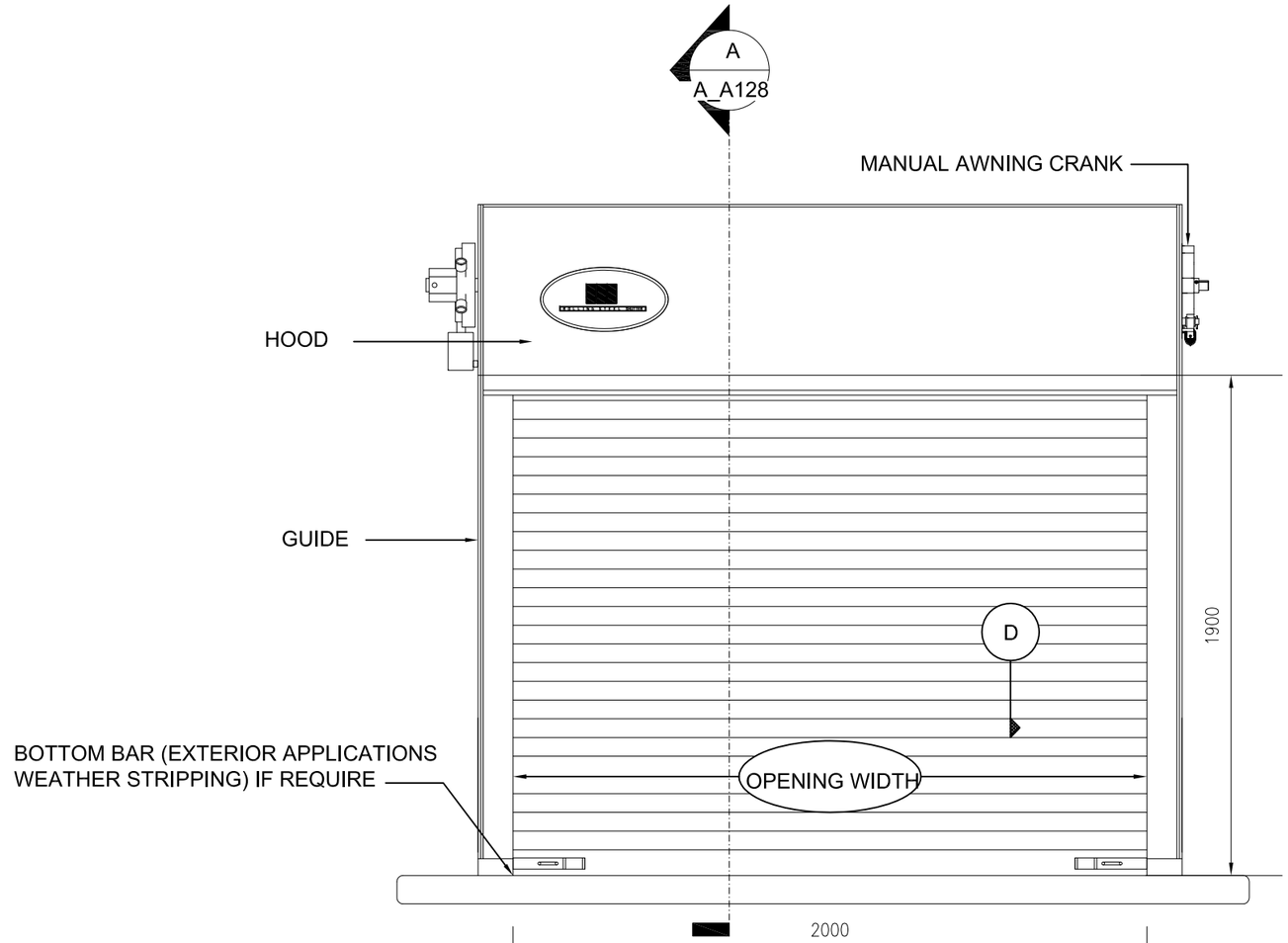

1 | PASSTHRU ROLLING RATED SHUTTER
A_A128 | SCALE: N.T.S

GENERAL NOTES

DESIGN WITH AUTOMATIC CLOSURE U.L MARK
ALTERNATE END LOCKS, TUBULAR BOTTOM BAR
IS STANDARD, CURTAIN IS 22 GA STEEL, HOODS
ARE 24GA GALVANIZED STEEL. ALL GALVANIZING
PER ASTM. A-525 STANDARDS.
THE PLACE WHERE FIRE RATED SHUTTER FITTED
TO STEEL, THE STEEL MUST BE INSULATED WHERE
INSULATION HAS BEEN BREACHED.

NOTES

CURTAIN FINISH: GALVANIZED & PRIMED STEEL
BOTTOM BAR FINISH: PRIMED STEEL
GUIDE FINISH: PRIMED STEEL
FRONT HOOD: GALVANIZED & PRIMED STEEL
OPERATION COVER: GALVANIZED & PRIMED STEEL

U.L RATING

ITEM.01: UL 2 HOUR LABEL

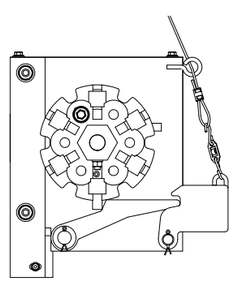

B | TENSION HEAD PLATE DETAIL
A_A128 | SCALE: N.T.S

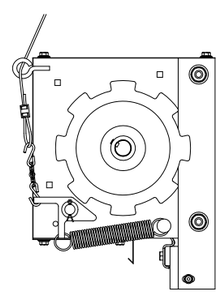

C | DRIVE HEAD PLATE DETAIL
A_A128 | SCALE: N.T.S

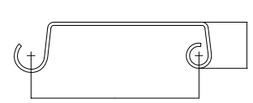

D | FLAT SLAT DETAIL
A_A128 | SCALE: N.T.S

PRELIMINARY - NOT FOR CONSTRUCTION

REV	DATE	BY	SUB	APP	DESCRIPTION

DESIGNED P.HOPE
DRAWN WAHIDULLAH.Y
CHECKED P.HOPE
IN CHARGE D. WHEELER
DATE 05 DEC 09

AFGHAN NATIONAL SECURITY FORCE
Comprehensive Plan for Facilities Development

MINISTRY OF INTERIOR (MoI) - AFGHAN NATIONAL POLICE
PROVINCIAL FIRE STATION TYPE - B

Fire Rated Passthru Shatter, Plan, Elevation
Section and Details

SCALE
AS SHOWN

PROJECT NO.
AS SHOWN

A_A128

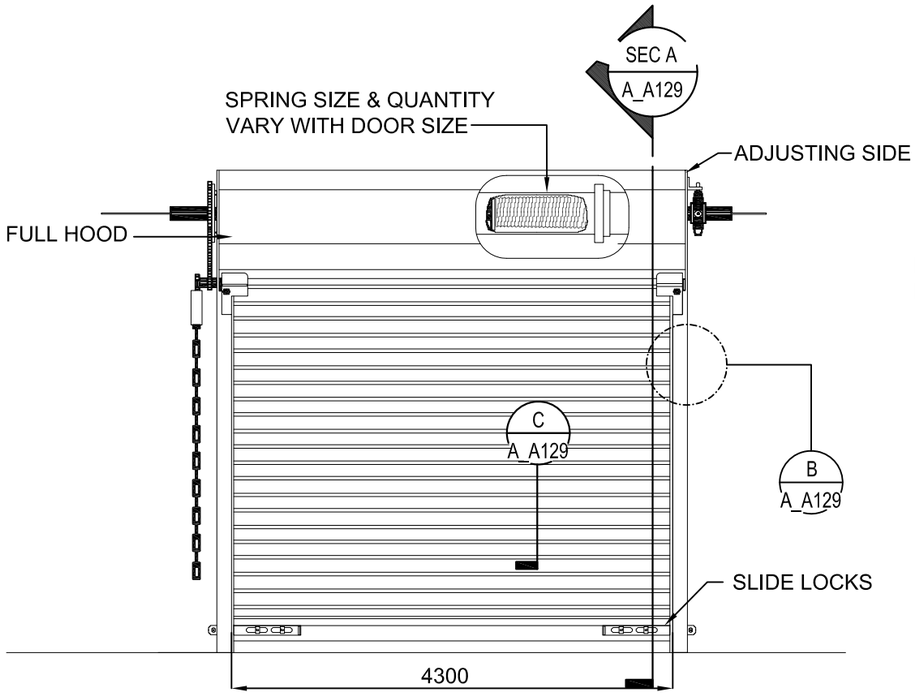

1 | OVERHEAD COILING DOOR ELEVATION
A_A129 | SCALE: N.T.S

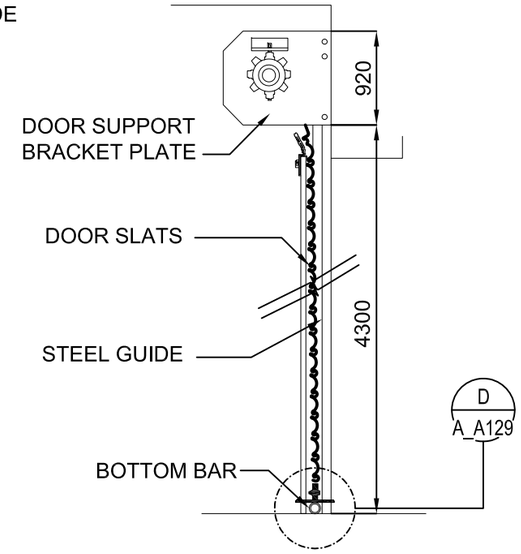

A | SECTION A – A
A_A129 | SCALE: N.T.S

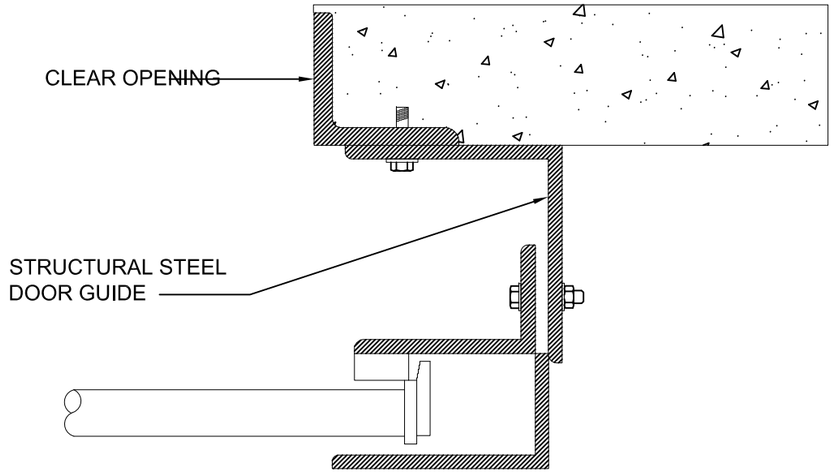

B | STEEL JAMB GUIDE DETAIL
A_A129 | SCALE: N.T.S

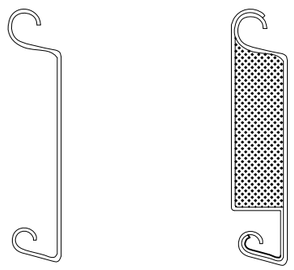

C | FLAT SLAT WITH INSULATED
A_A129 | SCALE: N.T.S

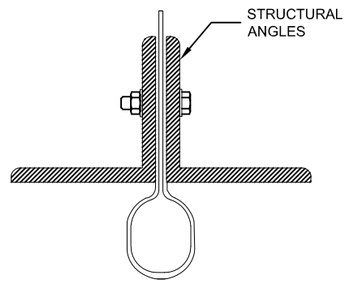

D | BOTTOM BAR WITH VINYL ASTRAGAL
A_A129 | SCALE: N.T.S

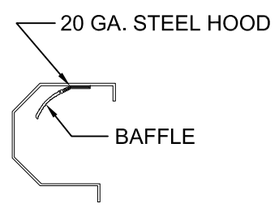

2 | GALVANIZED STEEL HOOD SECTION
A_A129 | SCALE: N.T.S

GENERAL NOTE:

- STRUCTURAL STEEL PIPE BARREL
- 750mm (3inch) REPLACEABLE CURVED OR FLAT SLATS MADE FROM MIN, 22 GAUGE HOT-DIPPED GAL. STEEL.
- INDIVIDUAL SLATS CAN BE REPLACED EASILY IF DAMAGED BY EQUIPMENT TRAFFIC INSURING SECURITY SAFETY AND LONG LASTING AESTHETIC APPEAL.
- STRUCTURAL STEEL 2 ANGLE BOTTOM BAR WITH INTEGRAL REINFORCEMENT INCLUDES A TWO PART POSI-LOCK DOOR STOP FOR ADDITIONAL SAFETY.
- FULL WIDTH PVC BULB-TYPE ASTRAGAL PROVIDES SEAL FOR IRREGULAR FLOORS.
- STRUCTURAL STEEL 3-PIECE ANGLE GUIDES WITH DURABLE EPOXY PAINT.
- CAST STEEL END LOCKS STANDARD; REDUCE FRICTION AND NOISE AND PROVIDES CURTAIN ALIGNMENT DURING OPERATION AND WIND LOADING
- AVAILABLE SIZE IS 4300mm (14.2 foot) WIDTH AND 4300mm HIGH.
- 20 GAUGE HEX-SHAPED HOOD ASSEMBLY STANDARD.
- FACTORY PRE-STRETCHED AND PRE-LUBRICATED SPRING.

PRELIMINARY - NOT FOR CONSTRUCTION

REV	DATE	BY	SUB	APP	DESCRIPTION

AFGHAN NATIONAL SECURITY FORCE
Comprehensive Plan for Facilities Development

MINISTRY OF INTERIOR (MoI) - AFGHAN NATIONAL POLICE
PROVINCIAL FIRE STATION TYPE - B

Overhead Coiling Door Plan, Elevation
Section & Details

DESIGNED P.HOPE
DRAWN WAHIDULLAH.Y
CHECKED P.HOPE
IN CHARGE D. WHEELER
DATE 05 DEC 2009

SCALE AS SHOWN
PROJECT NO. AS SHOWN

A_A129

GENERAL NOTES

1.0 THIS PROJECT HAS BEEN DESIGNED IN ACCORDANCE WITH THE INTERNATIONAL BUILDING CODE (IBC) 2006 EDITION AND THE UNIFIED FACILITIES CRITERIA (UFL) REQUIREMENTS.

1.1 THIS PROJECT HAS BEEN DESIGNED FOR THE WEIGHTS AND MATERIALS INDICATED ON THE DRAWINGS AND FOR LIVE LOADS INDICATED IN THE DESIGN DATA. IT IS THE CONTRACTOR'S RESPONSIBILITY TO DETERMINE ALLOWABLE CONSTRUCTION LOADS AND TO PROVIDE PROPER DESIGN AND CONSTRUCTION OF FALSE WORK, FORM WORK, STAGING, BRACING, SHEETING AND SHORING, ETC.

1.2 COORDINATE THESE DRAWINGS WITH THE ARCHITECTURAL, MECHANICAL, ELECTRICAL, PLUMBING AND CIVIL DRAWINGS. ALL DIMENSIONS ARE SHOWN IN THE DRAWINGS ARE MILLIMETER UNLESS NOTED OTHERWISE .

1.3 THE CONTRACTOR SHALL VERIFY AND COORDINATE ALL FLOOR AND ROOF OPENING SIZES AND LOCATIONS, EQUIPMENT PAD SIZES AND LOCATIONS, ANCHOR BOLT LAYOUTS,ETC, WITH EQUIPMENT SELECTED. THE CONTRACTOR SHALL MAKE ANY REQUIRED MODIFICATIONS AT NO ADDITIONAL COST.

1.4 THE CONTRACTOR SHALL REFER TO THE ARCHITECTURAL, MECHANICAL, ELECTRICAL AND PLUMBING DRAWINGS FOR SLEEVES, CURBS, INSERT OR OPENINGS ETC. NOT HEREIN INDICATED.

1.5 NOT USED.

1.6 SLAB OPENINGS SMALLER THAN 250MM DIA TO BE CORE DRILLED IN FIELD UNO. SEE MECHANICAL ELECTRICAL, AND PLUMBING DRAWINGS FOR LOCATIONS OF THESE OPENINGS.

1.7 WORK NOT INCLUDED ON THE DRAWINGS BUT IMPLIED TO BE SIMILAR TO THAT SHOWN AT CORRESPONDING PLACES ELSEWHERE ON THE DRAWINGS SHALL BE REPEATED.

1.8 IN CASE OF CONFLICT BETWEEN NOTE, DETAILS AND SPECIFICATIONS THE MOST RIGID REQUIREMENTS SHALL GOVERN.

1.9 SEE ARCHITECTURAL DRAWINGS FOR LOCATIONS OF MASONRY AND DRYWALL NON-LOAD BEARING PARTITIONS. PROVIDE COMPRESSIBLE FIRE STOPPING AT TOP OF WALL AS REQUIRED BY ARCHITECTURAL DRAWINGS.

1.10 COORDINATE FINISHED FLOOR DATUM ELEVATION 0.0m WITH THE CIVIL DRAWINGS.

2.0 FOUNDATION NOTES

2.1 THE GEOTECHNICAL ANALYSIS FOR THIS PROJECT IS THE RESPONSIBILITY OF THE CONTRACTOR AWARDED THE WORK. DESIGN VALUES USED IN THE STRUCTURAL ANALYSIS OF THE BUILDINGS HEREIN INDICATED HAVE BEEN ASSUMED AND SHALL BE CONFIRMED AND VERIFIED AS PART OF THE GEOTECHNICAL INVESTIGATION. VALUES WHICH DO NOT MEET THE REQUIREMENTS INDICATED ON THE BASIS OF DESIGN SHEET SHALL BE IMMEDIATELY BROUGHT TO THE ATTENTION OF THE ENGINEER OF RECORD FOR CONSIDERATION AND DETERMINATION ON THE NEXT APPROPRIATE COURSE OF ACTION.

2.2 SEE THE SPECIFICATIONS FOR REQUIREMENTS IN ADDITION TO THOSE OUTLINED IN THE GEOTECHNICAL INVESTIGATION FOR EXCAVATION AND PREPARATION OF THE FOUNDATION AND THE SLAB ON GRADE SUB-GRADE INCLUDING COMPACTION PROCEDURES.

2.3 EXCAVATIONS FOR FOOTINGS SHALL HAVE THE SIDES AND BOTTOMS TEMPORARILY LINED WITH 0.15mm POLYETHYLENE SHEETING IF PLACEMENT OF CONCRETE DOES NOT OCCUR WITHIN 24 HRS OF THE EXCAVATION OF THE FOOTING.

2.4 FOUNDATION CONDITIONS NOTED DURING CONSTRUCTION WHICH DIFFER FROM THOSE DESCRIBED IN THE GEOTECHNICAL REPORT SHALL BE PRESENTED TO THE GENERAL CONTRACTOR BEFORE FURTHER CONSTRUCTION ATTEMPTED. SEE PROJECT SPECIFICATIONS.

2.5 NO FOOTINGS OR SLABS SHALL BE POURED INTO OR AGAINST SUBGRADE CONTAINING FREE WATER, FROST, ICE OR LOOSE MATERIAL, FROST DEPTH ASSUMED TO BE 950mm.

2.6 ALL SLAB-ON-GRADE TRENCH BOTTOMS AND OTHER ON-GRADE INTERIOR HORIZONTAL SURFACES SHALL BE PLACED OVER A 100mm #57 STONE WATER BARRIER PLACED ON SUB-GRADE PROPERLY PREPARED IN ACCORDANCE WITH THE CONTRACT SPECIFICATONS (UNO)

2.7 SEE PLUMBING, ELECTRICAL & CIVIL DRAWINGS FOR REQUIRED UNDER SLAB UTILITIES.

2.8 SEE ARCHITECTURAL DRAWINGS FOR ALL WATERPROOFING DETAILS AND MATERIALS.

2.9 IF UNDERMINING OF FOOTINGS OCCURS, FILL VOIDS WITH 10 MPa CONCRETE. DO NOT ATTEMPT TO REPLACE AND RE-COMPACT SOIL.

2.10 ALL FOUNDATION SYSTEMS HAVE BEEN DESIGNED UTILIZING THE PESUMPTIVE SOIL PARAMETER OF IBC 2006, TABLE 1804.2 "ALLOWABLEFOUNDATION AND LATERAL PRESSURE" SOIL BEARING PRESSURE EQUAL TO 72kPa (1500 PSF)

2.11 LATERAL SLIDING OF FOUNDATIONS WAS EVALUATED IN ACCORDANCE WITH 1BC 2006, SECTION 1804. A COEFFICENT OF FRICTION OF 0.3 WAS ASSUMED FOR RESISTANCE TO LATERAL SLIDING

3.0 CONCRETE

3.1 CONCRETE SHALL BE NORMAL WEIGHT WITH MINIMUM COMPRESSIVE STRENGTHS (f'c) AT 28 DAYS OF 30 MPa (4000 PSI) FOR SUPER STRUCTURE AND 30 MPa (4000 PSI) FOR FOUNDATION. SEE SPECIFICATION FOR ADDITIONAL INFORMATION. ENTRAIN AIR TO PRODUCE TOTAL AIR CONTENT ACCORDING TO THE SPECIFICATIONS FOR CONCRETE EXPOSED TO FREEZING TEMPERATURES (EXTERIOR FOOTINGS, SLAB TURNDOWNS, EXTERIOR SLABS AND SLABS-ON-GRADE, EXTERIOR RETAINING WALLS AND EXTERIOR GRADE BEAMS)

3.2 GROUT FOR BASE PLATES SHALL BE NON-SHRINKABLE GROUT AND SHALL HAVE A MINIMUM SPECIFIED COMPRESSIVE STRENGTH AT 28 DAYS OF 35MPa (5000 PSI), UNLESS OTHERWISE NOTED.

3.3 NO CALCIUM CHLORIDE SHALL BE USED IN ANY CONCRETE.

3.4 MIXING, TRANSPORTING, AND PLACING OF CONCRETE SHALL CONFORM TO AC1-301-99

3.5 ALL CONCRETE WORK SHALL CONFORM TO THE REQUIREMENTS OF AMERICAN CONCRETE INSTITUTE (ACI) 318 M MANUAL (metric) "BUILDING CODE REQUIREMENTS FOR REINFORCED CONCRETE", AND REQUIREMENTS OUTLINED IN THE CONTRACT SPECIFICATIONS. WHEN THERE IS A CONFLICT BETWEEN ACI AND SPECIFICATIONS THE MORE STRINGENT SHALL GOVERN.

3.6 CHAMFER ALL EXPOSED EXTERNAL CORNERS OF CONCRETE WITH 20mmX45 DEGREE CHAMFER, UNO.

3.7 CONCRETE REINFORCEMENT BARS SHALL CONFORM TO ASTM A615M-96a, GRADE 60 (420 MPa TENSILE) REINFORCING BARS SHALL NOT BE TACK WELDED, WELDED, HEATED,OR CUT,UNLESS INDICATED ON THE CONTRACT DOCUMENTS. ALL LAP SPLICES SHALL BE CLASS "B" U.N.O.

3.8 HORIZONTAL FOOTING AND HORIZONTAL WALL REINFORCEMENT SHALL BE CONTINUOUS AND SHALL HAVE 90 DEGREE BENDS AND EXTENSIONS, OR CORNER BARS OF EQUIVALENT SIZE LAPPED WITH A CLASS "B" TENSION SPLICE AT CORNERS AND INTERSECTIONS. TOP BAR CRITERIA SHALL APPLY IF 300mm OR MORE OF FRESH CONCRETE IS PLACED BELOW BAR.

3.9 SLABS-ON-GRADE SHALL HAVE CONSTRUCTION JOINTS CAN BE USED AT CONTROL JOINT LOCATIONS AT CONTRACTOR'S OPTION. SEE SLAB PLANS & JOINTS CAN BE USED AT CONTROL JOINT INFORMATION FOR AREAS NOT SHOWN ON DWGS, THE MAXIMUM SPACING OF CONSTRUCTION / CRACK CONTROL JOINTS SHALL BE 4800mm.

3.10 SEE SPECIFICATIONS FOR ALL WATERPROOFING/DAMPROOFING REQUIREMENTS.

3.11 CONTRACTOR SHALL CAST FRESH CONCRETE IN ACCORDANCE WITH THE PROVISIONS FOR HOT AND COLD WEATHER CONCRETE AS SPECIFIED IN ACI 306.1-90 "STANDARD SPECIFICATION FOR COLD WEATHER CONCRETE", AND ACI 305R-99 "HOT WEATHER CONCRETING"

3.12 ALL CONCRETE REINFORCEMENT SHALL BE DETAILED, FABICATED,LABELED, SUPPORTED, AND SPACED IN FORMS AND SECURED IN PLACE IN ACCORDANCE WITH THE PROCEDURES AND REQUIREMENTS OUTLINED IN THE LATEST EDITION OF THE "BUILDING CODE REQUIREMENTS FOR REINFORCED CONCRETE", ACI 318, AND THE "MANUAL OF STANDARD PRACTICE FOR DETAILING REINFORCED CONCRETE STRUCTURES', ACI SP-66, LATEST EDITION.

3.13 SHOP DRAWINGS SHOWING REINFORCING DETAILS, INCLUDING STEEL SIZES, SPACING AND PLACEMENT, SHALL BE SUBMITTED FOR REVIEW AND APPROVAL PRIOR TO FABRICATION.

3.14 ALL DOWELS SHALL MATCH SIZE AND NUMBER OF MAIN REINFORCING, UNLESS NOTED OTHERWISE ON DRAWINGS.

3.15 ADDITIONAL BARS SHALL BE PROVIDED AROUND ALL FLOOR AND WALL OPENINGS AS SHOWN ON THE DWGS.

3.16 SEE ARCHITECTURAL DRAWINGS FOR TYPE AND LOCATION OF ALL FLOOR FINISHES.

3.17 THE CONTRACTOR SHALL COORDINATE ADDITIONAL WALL/SLAB OPENINGS NOT SHOWN ON STRUCTURAL DRAWINGS. SEE MECHANICAL, ELECTRICAL PLUMBING AND CIVIL DRAWINGS.

3.18 UNLESS NOTED OTHERWISE, ALL CURBS SHALL BE REINFORCED WITH AT LEAST (1) #13 CONTINUOUS AND (1) #13 AT 300mm ON CENTER (OC) DOWELS TO STRUCTURE BELOW.

3.19 THE SUBCONTRACTOR SHALL VERIFY ALL OPENING, PAD SIZES, AND ANCHOR BOLTS WITH EQUIPMENT SELECTED.

3.20 FOR ALL WALLS & PIERS, PROVIDE DOWELS INTO FOOTING AT EACH VERTICAL REINFORCING BAR, U.N.O. DOWEL SIZE SHALL BE SAME AS VERTICAL REINFORCEMENT.

3.21 ALL DEFORMED BAR ANCHORS SHALL BE TRS NELSON DIVISION OR EQUAL 15mm DIA (UNO) CONFORMING TO ASTM A-496M WITH A MINIMUM TENSILE STRENGTH OF 550MPa. ANCHOR DIMENSIONS SHALL BE IN ACCORDANCE WITH ASTM D-19. INSTALL ANCHORS IN ACCORDANCE WITH MANUFACTURER'S RECOMMENDATIONS BY AUTOMATIC ND WELDING AS INDICATED ON THE DRAWINGS. NO UNAUTHORIZED OR FIELD WELDING SHALL BE MADE WITHOUT AUTHORIZATION FROM THE MANUFACTURER.

3.22 ALL REINFORCING INDICATED TO BE WELDED SHALL BE IN ACCORDANCE WITH ASTM A706M. "LOW ALLOY STEEL DEFORMED BARS FOR CONCRETE REINFORCEMENT". ANY INSTALLATIONS USING MANUFACTURER'S EQUIPMENT SHALL BE PER MANUFACTURER'S RECOMMENDATIONS.

3.23 PROVIDE CONCRETE POUR STOPS OR FORM AS REQUIRED FOR INSTALLATION OF ALL CONCRETE WORK.

3.24 PROVIDE ADDITIONAL (2) #13 x 600mm REINFORCING BARS IN SLAB-ON-GRADE AT ALL RE-ENTRANT CORNERS. PLACE BARS AT MID-DEPTH OF SLAB WITH A CLEARANCE OF 50mm FROM CORNER U.N.O.

4.0 CONCRETE MASONRY

4.1 MASONRY CONSTRUCTION AND MATERIALS SHALL CONFORM TO ALL REQUIREMENTS OF THESE CONTRACT DOCUMENTS AND THE PROJECT SPECIFICATIONS.

4.2 THE SPECIFIED ULTIMATE COMPRESSIVE STRENGTH OF CONCRETE MASONRY (f'm) ON THE NET AREA IS A MINIMUM OF 15 MPa (1500 PSI).

4.3 PROVIDE TWO #16 BARS CONTINUOUS IN ALL CAST-IN-PLACE LINTELS (CIPL) UNO ON THE DRAWINGS. CIPL SHALL BE CONTINUOUS AND SPACED AT A MAXIMUM OF 1200mm OC VERTICALLY. ALL CIPL SHALL BE A MINIMUM OF 200mm DEPTH WITH REINFORCING BEING CONTINUOUS AND HAVING STANDARD ACI HOOKS AT EACH END. PROVIDE STANDARD BAR SPLICES AS SPECIFIED.

4.4 PROVIDE AS A MINIMUM (1) #13 BAR VERTICAL REINFORCEMENT IN ALL WALLS SPACED ATA MAXIMUM 400mm OC. PROVIDE ADDITIONAL VERTICAL BARS AT EACH END OF ALL WALLS AND ON EACH SIDE OF OPENINGS IN ALL WALL. PROVIDE STANDARD BAR SPLICES AS SPECIFIED. ALL VERTICAL REINFORCEMENT EXTENDS FULL HEIGHT OF WALL, U.N.O.

4.5 CMU CELLS THAT REQUIRE VERTICAL REINFORCING BARS AS INDICATED ON THE CONTRACT DRAWINGS AND/OR SPECS SHALL BE PLACED IN CENTERS OF CMU CELLS AND CONTINUOUSLY GROUTED UNO.

4.6 PROVIDE LADDER TYPE JOINT REINFORCEMENT AT 200mm EXTERIOR & 400 INTERIORmm ON CENTER MAXIMUM U.N.O. MINIMUM ROD SIZE USED SHALL BE 9 GA. DEFORMED WIRE AND CONFORM TO ASTM A82, U.N.O.

4.7 PROVIDE CONTROL JOINTS AS INDICATED ON THE ARCHITECTURAL DRAWINGS.

4.8 GROUT FOR MASONRY SHALL BE NORMAL WEIGHT AND HAVE A MINIMUM COMPRESSIVE STRENGTH OF 15 MPa (2030 PSI) AT 28 DAYS. GROUT SHALL CONFORM TO ASTM C476. GROUT LIFTS SHALL NOT EXCEED 1400mm.

4.9 USE MORTAR TYPES CONFORMING TO ASTM C270; SEE SPECIFICATIONS.

4.10 CONCRETE MASONRY UNITS SHALL BE NORMAL WEIGHT AND CONFORM TO ASTM C90.

4.11 ALL CMU CELLS, OPEN CAVITIES, AND AIR SPACES SHALL BE FULLY GROUTED, TO STOP FRAGMENTS FROM MORTAR BLAST.

4.12 CAST-IN-PLACE LINTEL REINFORCING SHALL EXTEND PAST CONTROL JOINTS. MAXIMUM CONTROL JOINT SPACING SHALL BE AS INDICATED ON THE ARCHITECTURAL DRAWINGS.

4.13 CONTRACTOR SHALL COORDINATE LOCATION OF ALL OPENINGS SEE ARCHITECHTURAL, MECHANICAL, ELECTRICAL AND PLUMBING DRAWINGS FOR SIZE AND LOCATION OF OPENINGS.

4.14 MASONRY WALLS SHALL NOT BE BACK FILLED PRIOR TO THE MORTAR AND 4.14 GROUT ATTAINING THEIR RESPECTIVE MAXIMUM DESIGN STRENGTHS PER SPECIFICATIONS.

4.15 MASONRY CHIMNEYS SHALL BE STRAPPED TO ADJACENT MASONRY WALLS AND STEEL FRAMING WITH A MINIMUM OF (2) 5mmx 25mm STRAPS. STRAPS SHALL BE EMBEDDED A MINIMUM OF 300mm INTO THE CHIMNEY. STRAPS SHALL BE HOOKED AROUND THE OUTER BARS AND EXTEND 150mm BEYOND THE BEND.

5.0 STEEL DECK

5.1 STEEL DECK SHALL BE ASTM A446 HAVING A MINIMUM YIELD STRENGTH OF 414 MPa AS PER THE STEEL DECK INSTITUTE DESIGN MANUAL

5.2 STEEL DECK SHALL BE ERECTED IN ACCORDANCE WITH THE MANUFACTURER'S SPECIFICATIONS AND ERECTION LAYOUTS AND CONNECTED TO SUPPORTING MEMBERS AS INDICATED BELOW.

5.3 ROOF DECK

5.3.1 STEEL ROOF DECK SHALL BE 38MM RIB HEIGHT, 24 GAGE PRIME-PAINTED WIDE RIB (SDI TYPE B-24) U.N.O.

5.3.2 ROOF DECK SHALL HAVE THE FOLLOWING MINIMUM PROPERTIES:

24 GAGE

MOMENT OF INERTIA, Ip	165 mm/mm WIDTH
SECTION MODULUS (TOP OF DECK), Sn	7.04 mm/mm WIDTH
SECTION MODULUS (BOTTTOM OF DECK), Sp	6.45 mm/mm WIDTH

IN ADDITION TO MEETING THE MINIMUM REQUIREMENTS ABOVE, THE DECK MANUFACTURER SHALL DESIGN THE ROOF DECK AND ATTACHMENT TO STEEL FOR THE ROOF LOADS, INCLUDING DECK UPLIFT INDICATED ON THE BASIS OF DESIGN SHEET. ALL ROOF DECKING SHALL HAVE A MINIMUM 2-SPAN CONDITION.

5.3.3 ROOF DECK SHALL BE FASTENED TO THE MAIN SUPPORTS WITH #12 SELF-TAPPING "TEK" SCREWS IN THE BOTTOM OF THE FLUTES USING A SDI 36/7 PATTERN. DECK SIDESLIPS SHALL BE ATTACHED USING #10 SELF-TAPING "TEK" SCREWS WITH A MINIMUM 8-SIDE LAPS CONNECTIONS PER SPAN. ALL ENDLAPS SHALL BE A MINIMUM OF 50mm AND SHALL OCCUR OVER SUPPORTS.

5.3.4 SUSPENDED CEILINGS, LIGHT FIXTURES, DUCTS, CONDUITS, PIPING OR OTHER UTILITIES SHALL NOT BE SUPPORTED BY THE STEEL ROOF DECK.

6.0 STRUCTURAL STEEL

6.1 STRUCTURAL STEEL ROLLED SHAPES AND PLATES SHALL CONFORM TO THE MATERIAL INFORMATION SCHEDULE. DIMENSIONS AND PROPERTIES SHALL BE IN ACCORDANCE TO ASTM A36.

6.2 ANCHOR BOLTS SHALL CONFORM TO ASTM A 307, GRADE B, or ASTM A 36 U.N.O.

6.3 CONNECTION BOLTS FOR STRUCTURAL STEEL MEMBERS SHALL BE ASTM A325-N AND HAVE A MINIMUM DIAMETER OF 20mm AND SHALL CONFORM TO ASTM A 307, GRADE B, or ASTM A 36 NUTS SHALL CONFORM TO ASTM A563; WASHERS SHALL CONFORM TO ASTM F436. CONNECTION BOLTS SHALL HAVE A HARDENED WASHER PLACED UNDER THE ELEMENT TO BE TIGHTENED.

6.4 DETAILING OF STEEL CONNECTIONS MUST BE IN ACCORDANCE WITH AISC MANUAL OF STEEL CONSTRUCTION, 13th EDITION.

6.4.1 THE CONTRACTOR'S FABRICATOR SHALL BE RESPONSIBLE FOR THE DESIGN AND DETAILING OF ALL STELL CONNECTIONS. THE MINIMUM DESIGN LOAD (VERTICAL END REACTION) TO BE CONSIDERED FOR DESIGN SHALL BE 44.5 kN (10KIP), U.N.O. THE MINIMUM AXIAL COMPRESSIVE OR TENSION REACTION FOR TRUSS ELEMENTS SHALL BE 44.5 kN (10KIP), U.N.O.

6.5 STANDARD FRAMING CONNECTIONS SHALL BE DETAILED BY THE FABRICATOR IN ACCORDING WITH THE AISC MANUAL OF STEEL CONSTRUCTION, 13th EDITION.

6.5.1 UNLESS NOTED OTHERWISE AS THUS: (##N), CONNECTIONS SHALL BE DESIGNED AND DETAILED FOR THE END REACTION DETERMINED FROM PART 2 -"ALLOWABLE UNIFORM LOAD TABLE" FROM THE AISC MANUAL OF STEEL CONSTRUCTION, 13th EDITION.

6.6 ALL MEMBERS AND CONNECTIONS ON THE CONTRACT DRAWINGS AND CONNECTIONS FOR NON SIMPLE CONNECTIONS NOT SHOWN SHALL BE DESIGNED AND SEALED BY A LICENSED PROFESSIONAL ENGINEER, DETAILED AND SUBMITTED FOR APPROVAL AND SHOWN ON THE SHOP DRAWINGS.

6.7 ALTERNATIVE CONNECTION DETAIL MAY BE SUBMITTED ON SHOP DRAWINGS BY THE CONTRACTOR ONLY IF ACCOMPANIED BY COMPLETED STRUCTURAL CALCULATIONS PREPARED AND SEALED BY A LICENSED PROFESSIONAL ENGINEER AND SUBMITTED FOR REVIEW.

6.8 CALCULATIONS FOR DETAILS MUST SHOW A RATIONAL ANALYSIS OF A COMPLETED LOAD PATH, INCLUDING LOCAL EFFECTS ON WEBS, FLANGES, ETC. OF THE CONNECTED MEMBERS AND THE DEVICES (PLATES, SEATS, BRACKET, BOLTS, WEBS, ETC) AFFECTING ALL CONNECTIONS. FAILURE TO SUBMIT SUCH CALCULATIONS FOR REVIEW CONCURRENT WITH SHOP DRAWING ERECTION PLANS AND DETAILS WILL BE CAUSE FOR REJECTION OF THAT SUBMITTAL.

6.8.1 ALL SHEAR TAB CONNECTIONS SUBMITTED AS AN ALTERNATE FOR APPROVAL SHALL BE DESIGNED USING A FLEXIBLE SUPPORT CONDITION.

6.8.2 BEAM AND GIRDER CONNECTIONS SHALL BE DESIGNED SUCH THAT ALL ADDITIONAL STRESSES DUE TO CONNECTION ECCENTRICITY SHALL BE DEVELOPED BY THE CONNECTION AN NOT INDUCE ANY ADDITIONAL STRESSES INTO SUPPORTING MEMBERS.

6.9 STRUCTURAL STEEL DETAILING, FABRICATION AND ERECTION SHALL CONFORM TO THE AISC SPECIFICATION FOR STRUCTURAL STEEL BUILDINGS-ALLOWABLE STRESS DESIGN AND PLASTIC DESIGN AND THE AISC CODE OF STANDARD PRACTICE FOR STEEL BUILDINGS AND BRIDGES" AND THE AISC "CODE OF STANDARD PRACTICE FOR STEEL BUILDINGS AND BRIDGES"- LATEST EDITIONS.

6.10 WELDING SHALL CONFORM TO THE AMERICAN WELDING SOCIETY STRUCTURAL WELDING CODE AWS D1.1. ELECTRODES FOR SHOP AND FIELD WELDS SHALL BE CLASS E70XX. ALL WELDING SHALL BE DONE BY QUALIFIED, CERTIFIED WELDERS PER THE ABOVE STANDARD.

6.11 SHOP AND FIELD TESTING OF WELDS AND BOLTS SHALL BE AS OUTLINED IN THE SPECIFICATIONS.

6.12 ALL FILLET WELDS SHALL BE A MINIMUM OF 5mm UNLESS NOTED OTHERWISE

6.13 THERE SHALL BE NO FIELD CUTTING OF STRUCTURAL STEEL MEMBERS FOR THE WORK OF OTHER TRADES WITHOUT PRIOR APPROVAL OF THE ENGINEER OF RECORD.

6.0 STRUCTURAL STEEL (CONT)

6.14 FOR FLOOR AND ROOF OPENINGS, THE FABRICATOR SHALL VERIFY OPENING LOCATIONS WITH EQUIPMENT SELECTED AND MAKE ANY NECESSARY MODIFICATIONS AT NO ADDITIONAL COST. THE CONTRACTOR SHALL COORDINATE MECHANICAL UNITS AND OPENINGS & ARCHITECTURAL ITEMS REQUIRED FOR COMPLETE INSTALLATION OF WORK. IT IS THE RESPONSIBILITY OF FABRICATOR TO OBTAIN ALL NECESSARY INFORMATION PRIOR TO FABRICATION OF THE STEEL

6.15 ALL STRUCTURAL STEEL SHALL BE PRIMED AS PER THE SPECIFICATIONS.

6.16 ALL PLATES NOT INDICATED SHALL BE 10mm MINIMUM THICKNESS. ALL ANGLES NOT INDICATED SHALL BE 70x70x6 MINIMUM. ALL WELDS NOT INDICATED SHALL BE 6mm MINIMUM ALL AROUND U.N.O.

6.17 SEE MECHANICAL, ELECTRICAL, AND PLUMBING DRAWINGS FOR ADDITIONAL OPENINGS NOT SHOWN. ALL OPENINGS SHALL BE FRAMED 4 SIDES WITH UPN 200, ACCORDING TO EN 10 279, OR EQUIVALENT (AISC C8x11.5) U.N.O.

6.18 THE DESIGN OF THE STEEL TRUSS SYSTEM FOR THE VEHICLE BAYS OF THE FIRESTATION FACILITY INCLUDE A TOP AND BOTTOM CHORD UNIFORM DEAD LOAD OF 0.58 kPa (12 PSF) AND 0.48 kPa (10 PSF), REPSECTIVELY.
IN ADDITION, A MOVABLE CONCENTRATED LOAD OF 9 kN (2000 LBS) WAS APPLIED TO EACH EACH OF THE TRUSS PANEL POINTS IN COMBINATION WITH THE ROOF LIVE LOAD AND SNOW LOAD COMBINATIONS.

7.0 COLD FORMED METAL FRAMING (CFMF) SYSTEM

7.1 CFMF SHALL BE DESIGNED BY CFMF MANUFACTURER'S ENGINEER FOR ALL LOADING PER CODE AND AS INDICATED ON THE DRAWINGS.

7.2 FOR WIND LOADS, SEE BASIS OF DESIGN SHEET "COMPONENTS AND CLADDING WIND LOADS. WIND LOADS SHALL BE USED IN CONJUNCTION WITH FIGURE 6-11A AND FIGURE 6-11B OF ASCE 7-05.

7.3 SUBMIT VENDOR'S PUBLISHED LITERATURE, TEST DATA AND INSTALLATION INSTRUCTIONS FOR METAL STUD ASSEMBLY AND ACCESSORIES INCLUDING OTHER DATA AS MAY BE REQUIRED TO CERTIFY COMPLIANCE WITH PERFORMANCE REQUIREMENTS SPECIFIED HEREIN.

7.4 ALL EXTERIOR LIGHT GAGE STUD FRAMING SHALL BE A MINIMUM OF 18 GAGE MATERIAL U.N.O. EXTERIOR METAL STUDS SHALL BE 100 mm OR 150 mm STUDS AS INDICATED SPACED AT 400 OC MAXIMUM.

7.5 SHOP DRAWINGS AND DESIGN ANALYSIS SHALL BE SUBMITTED FOR APPROVAL PRIOR TO FABRICATION. ALL SHOP DRAWINGS AND DESIGN ANALYSIS SHALL BE SEALED BY A LICENSED PROFESSIONAL ENGINEER.

7.6 DEPTH OF WALL SYSTEMS ARE AS SPECIFIED ON THE DRAWINGS. CONNECTIONS AND GAGE SIZES ARE MINIMUM AND SHALL BE INCREASED AS NECESSARY TO PROVIDE A STRUCTURALLY ADEQUATE SYSTEM. KICKERS MAY BE ADDED TO REDUCE THE STUD HEIGHTS WHERE ACCEPTABLE AND COORDINATED WITH THE ARCHITECTURAL DRAWINGS.

7.7 SEE ARCHITECTURAL DRAWINGS FOR ADDITIONAL INFORMATION AND LOCATION ON STUD WALLS.

7.8 ALL MISCELLANEOUS KICKERS, JAMBS, HEADERS, SUB-FRAMING, ETC, INDICATED ON THE ARCHITECTURAL DRAWINGS AND SHOWN OR NOT SHOWN ON STRUCTURAL DRAWINGS SHALL BE DESIGNED, DETAILED AND SUBMITTTED ON SHOP DRAWINGS.

PRELIMINARY - NOT FOR CONSTRUCTION

REV	DATE	BY	SUB	APP	DESCRIPTION

AFGHAN NATIONAL SECURITY FORCE
Comprehensive Plan for Facilities Development

MINISTRY OF INTERIOR (MoI) - AFGHAN NATIONAL POLICE
PROVINCIAL FIRE STATION TYPE-A

Structural General Notes

DESIGNED: V. STEGMEIR
DRAWN: M. LORENZ
CHECKED: F. HAMMERS
IN CHARGE: G. LUCKENBAUGH
DATE: 05 DEC 2009

SCALE: AS SHOWN
PROJECT NO.: –

A_S000

N:\ANP FIRE STATIONS\~99%INITIAL_FSsA&B_091205\FSA_99%INITIAL_DrwgsInACAD\A_S000--StructuralGeneralNotes.dwg 12/12/2009 10:44am CAD_9

1. Firestation A

A) Dead Loads: The following dead loads were assumed for the design of the Firestation A in accordance with IBC 2006 Section 1606.

Dead Load Summary

Slab-on-grade

Mechanical Systems	(100	psf)	4.79

Elevated Roof Slab

Terrazo Tile	(20	psf)	0.96
Rigid insulation	(6	psf)	0.29
Felt Membrane	(2	psf)	0.10
Suspended Ceilings, lighting	(4	psf)	0.19
Mechanical, Plumbing, Electrical	(8	psf)	0.38
Σ =	(0	psf)	2.88 kPa

Wall System
Exterior

8	(105	psf)	5.03
Stucco	(6	psf)	0.29
Σ =	(111	psf)	5.31

Interior

8	(40	psf)	1.92
Stucco	(6	psf)	0.29
Σ =	(46	psf)	2.20

Floor Loads

Terrazo Tile	(20	psf)	0.96
Mechanical, Plumbing, Electrical	(8	psf)	0.38
Suspended Cielings, lighting	(4	psf)	0.19
Σ =	(32	psf)	1.53 Pa

B) Floor Live Loads were calculated in accordance with IBC 2006 Section 1607
The following floor live loads were assumed for the design of the elevated floor structure:

Floor Live Loads

Uniform live load	(Psf)	0.96
Concentrated live load	(lbs)	4.45 kN
Interior Partitions	(Psf)	0.192 kPa

C) Roof Live Loads were determined in accordance with IBC 2006 Section 1607.11.1

Roof Live Loads

Uniform live load	(Psf)	0.192 kPa

D) Snow Loads were determined in accordance with ASCE 7-05 Chapter 7

Ground Snow, p_g =	(41psf)	1.96
Terrain Category =	C	
Roof Exposure =	Partially Exposed	
Thermal Condition =	Heated	
Building Category:	IV	
Importance Factor, I =	1.2	Table -4
Exposure Factor, Ce =	1	Table -2
Thermal Factor, Ct =	1	Table -3

Flat Snow Loads, P_f = 0.7 $_eC_tIp_g$

P_f = (34.44 psf) 1.65

Unbalanced Snow Loads and Snow Drifts were evaluated in accordance with ASCE 7, Section 7.6 and Section 7.7

E) Wind Loads were determined in accordance with ASCE 7-05 Chapter 6

Wind Pressure – Main Wind Force Resisting System - Method -05

Terrain Category	=	C
Importance Factor, Iw	=	1.
Wind Speed	=	(100mph
Internal Pressure Coefficent GCpi	=	+/- 0.55
Wind Directionality Factor, Kd	=	0.85

Components and Cladding Wind Pressure per ASCE -05

Figure -11 - Walls - Enclosed and Partially Enclosed Bldgs

External Pressure Coeff. GC_p h < 18.3

	$0.1^2 - 0.9^2$	1.9^2	4.6^2	9.3^2	18.6^2	$14.6^2 - 92.9^2$
GC_p (	1	0.95	0.925	0.875	0.775	0.7
$p=q_h(GC_p-Gc_{pi})$	0.46	0.41	0.38	0.33	0.23	0.15
$p=q_h(GC_p-(-Gc_{pi}))$	1.58	1.53	1.50	1.45	1.35	1.27
GC_p (	-1.1	-1.05	-0.975	-0.95	-0.925	-0.8
$p=q_h(GC_p-Gc_{pi})$	-1.68	-1.63	-1.55	-1.53	-1.50	-1.37
$p=q_h(GC_p--(-Gc_{pi}))$	-0.56	-0.51	-0.43	-0.41	-0.38	-0.25
GC_p (	-1.4	-1.3	-1.15	-1.05	-0.95	-0.8
$p=q_h(GC_p-Gc_{pi})$	-1.99	-1.88	-1.73	-1.63	-1.53	-1.37
$p=q_h(GC_p-(-Gc_{pi}))$	-0.87	-0.76	-0.61	-0.51	-0.41	-0.25

Figure -11 - Roof - Enclosed and Partially Enclosed Bldgs (kPa)

External Pressure Coeff. GC_p h < 18.3

	$0.1^2 - 0.9^2$	1.9^2	4.6^2	9.3^2	18.6^2	$14.6^2 - 92.9^2$
GC_p (	-0.9	-0.85	-0.825	-0.8	-0.8	-0.8
$p=q_h(GC_p-Gc_{pi})$	-1.48	-1.43	-1.40	-1.37	-1.37	-1.37
$p=q_h(GC_p-(-Gc_{pi})$	-0.36	-0.31	-0.28	-0.25	-0.25	-0.25
GC_p (	-2.2	-2.2	-2.2	-2.2	-2.2	-2.2
$p=q_h(GC_p-Gc_{pi})$, kPa	-2.80	-2.80	-2.80	-2.80	-2.80	-2.80
$p=q_h(GC_p-(-Gc_{pi}))$, kPa	-1.68	-1.68	-1.68	-1.68	-1.68	-1.68

F) Seismic Loads were determined in accordance with ASCE 7-05 Chapters 11 and 12

IBC -05

12.8
Seismic Force Resisting System Design Criteria

Two Story Tower– Firestation A

Building Occupancy Categories	IV			
Soil Site Class	D		Table -3-1	
Seismic Importance Factor, Ie =	1.5			
Spectral Response Acc $_s$ =	128.00%	=	UFC –310–01	–2
Spectral Response Acc $_1$ =	51.00%	=	UFC –310–01	–2
Site Coefficient F_a =	1.050		Table	-1
Site Coefficient F_v =	1.500		Table	-2
Max Considered Earthquake Acc. S_{MS} =	$F_a.S_s$	=	(	-1
Max Considered Earthquake Acc. S_M =	$F_v.S_1$	=	(	-2
@ S_{DS} =	2/3 $_{MS}$)	=	(	-3
S_D =	2/3 $_M$)	=	(	-4

Design Category Consideration:

Seismic Design Category for $_{DS}$	D	Table -1
Seismic Design Category for	D	Table -2

Basic Seismic Resisting System – Special Reinforced Concrete Moment Frame

Response Modification Factor, R	8	Table 12.2 -1
System Overstrength Factor,Ω	3	Table -1
Deflection Amplification Factor, Cd	5.5	Table -1

Base Shear (X-direction

Base Shear (Z-direction

One Story Vehicle Bays– Firestation A

Building Occupancy Categories	IV			
Soil Site Class	D		Table -3-1	
Seismic Importance Factor, Ie =	1.5			
Spectral Response Acc $_s$ =	128.00%	=	UFC –310–01	D–2
Spectral Response Acc $_1$ =	51.00%	=	UFC –310–01	–2
Site Coefficient F_a =	1.050		Table	-1
Site Coefficient F_v =	1.500		Table	-2
Max Considered Earthquake Acc. S_{MS} =	$F_a.S_s$	=	(	-1
Max Considered Earthquake Acc. S_M =	$F_v.S_1$	=	(	-2
@ S_{DS} =	2/3 $_{MS}$)	=	(	-3
S_D =	2/3 $_M$)	=	(	-4

Design Category Consideration:

Seismic Design Category for $_{DS}$	D	Table -1
Seismic Design Category for	D	Table -2

Special Steel Truss Moment Frame (X-Direction): VEHICLE BAY ONLY

Response Modification Factor, R	7	Table -1
System Overstrength Factor,Ω	3	Table -1
Deflection Amplification Factor, Cd	5.5	Table -1

Special Reinforced Concrete Moment Frame (Z-Direction):

Response Modification Factor, R	8	Table -1
System Overstrength Factor,Ω	3	Table 12.2 -1
Deflection Amplification Factor, Cd	5.5	Table -1

Base Shear (X-direction Kn (VEHICLE BAY)

Base Shear (X-direction 80Kn (

Base Shear (Z-direction 0kN (VEHICLE BAY)

Base Shear (X-direction 80Kn (

2. Well House

A) Dead Loads: The following dead loads were assumed for the design of the Well House in accordance with IBC 2006 Section 1606.

Dead Load Summary

Slab-on-grade

Mechanical Systems	(100	Psf)	4.79

Elevated Roof Slab

Cold Form Steel Trusses	(	Psf)	0.19 kPa
Rigid insulation	(	Psf)	0.10 kPa
Sheathing and Felt Membrane	(	Psf)	0.19 kPa
Metal Decking	(	Psf)	0.10 kPa
Mechanical, Plumbing, Electrical	(8	Psf)	0.38
Σ =	(	Psf)	0.96 kPa

Wall System
Exterior

8	(105	Psf)	5.03
Stucco	(6	Psf)	0.29
Σ =	(111	Psf)	5.31

B) Roof Live Loads were determined in accordance with IBC 2006 Section 1607.11.1

Roof Live Loads

Uniform live load	(Psf)	0.192 kPa

C) Snow Loads were determined in accordance with ASCE 7-05 Chapter 7

Ground Snow, p_g =	(41psf)	1.96
Terrain Category =	C	
Roof Exposure =	Partially Exposed	
Thermal Condition =	Unheated	
Building Category:	I	
Importance Factor, I =	1.0	Table -4
Exposure Factor, Ce =	1.	Table -2
Thermal Factor, Ct =	1.	Table -3

Flat Snow Loads, P_f = 0.7 $_eC_tIp_g$

P_f = 41.3 Psf 1.98 Pa

Unbalanced snow loads were evaluated in accordance with ASCE 7, Sections 7.6

D) Wind Loads were determined in accordance with ASCE 7-05 Chapter 6

Wind Pressure – Main Wind Force Resisting System - Method -05

Terrain Category	=	C
Importance Factor, Iw	=	1.
Wind Speed	=	(100mph
Internal Pressure Coefficent GCpi	=	+/- 0.55
Wind Directionality Factor, Kd	=	0.85

Components and Cladding Wind Pressure per ASCE -05

Figure -11 - Walls - Enclosed and Partially Enclosed Bldgs

External Pressure Coeff. GC_p h < 18.3

	$0.1^2 - 0.9^2$	1.9^2	4.6^2	9.3^2	18.6^2	$14.6^2 - 92.9^2$
GC_p (	1	0.95	0.925	0.875	0.775	0.7
$p=q_h(GC_p-Gc_{pi})$, psf	0.40	0.35	0.33	0.29	0.20	0.13
$p=q_h(GC_p-(-Gc_{pi}))$, psf	1.37	1.33	1.31	1.26	1.17	1.11
GC_p (	-1.1	-1.05	-0.975	-0.95	-0.925	-0.8
$p=q_h(GC_p-Gc_{pi})$	-1.46	-1.42	-1.35	-1.33	-1.31	-1.20
$p=q_h(GC_p-(-Gc_{pi}))$	-0.49	-0.44	-0.38	-0.35	-0.33	-0.22
GC_p (	-1.4	-1.3	-1.15	-1.05	-0.95	-0.8
$p=q_h(GC_p-Gc_{pi})$	-1.73	-1.64	-1.51	-1.42	-1.33	-1.20
$p=q_h(GC_p-(-Gc_{pi}))$	-0.75	-0.66	-0.53	-0.44	-0.35	-0.22

Figure -11 - Roof - Enclosed and Partially Enclosed Bldgs

External Pressure Coeff. GC_p h < 18.3

	$0.1^2 - 0.9^2$	1.9^2	4.6^2	9.3^2	18.6^2	$14.6^2 - 92.9^2$
GC_p (	-0.9	-0.85	-0.825	-0.8	-0.8	-0.8
$p=q_h(GC_p-Gc_{pi})$	-0.22	-0.27	-0.29	-0.31	-0.31	-0.31
$p=q_h(GC_p-(-Gc_{pi}))$	0.75	0.71	0.69	0.66	0.66	0.66
GC_p (	-2.2	-2.2	-2.2	-2.2	-2.2	-2.2
$p=q_h(GC_p-Gc_{pi})$	-1.37	-1.35	-1.33	-1.28	-1.28	-1.28
$p=q_h(GC_p-(-Gc_{pi}))$	-0.40	-0.38	-0.35	-0.31	-0.31	-0.31

E) Seismic Loads were determined in accordance with ASCE 7-05 Chapters 11 and 12

IBC -05

12.8
Seismic Force Resisting System Design Criteria

Two Story Tower– Firestation A

Building Occupancy Categories	I			
Soil Site Class	D		Table -3-1	
Seismic Importance Factor, Ie =	1.0			
Spectral Response Acc $_s$ =	128.00%	=	UFC –310–01	–2
Spectral Response Acc $_1$ =	51.00%	=	UFC –310–01	–2
Site Coefficient F_a =	1.050		Table	-1
Site Coefficient F_v =	1.500		Table	-2
Max Considered Earthquake Acc. S_{MS} =	$F_a.S_s$	=	(	-1
Max Considered Earthquake Acc. S_M =	$F_v.S_1$	=	(	-2
@ S_{DS} =	2/3 $_{MS}$)	=	(	-3
S_D =	2/3 $_M$)	=	(	-4

Design Category Consideration:

Seismic Design Category for $_{DS}$	D	Table -1
Seismic Design Category for	D	Table -2

Basic Seismic Resisting System – Special Reinforced Concrete Moment Frame

Response Modification Factor, R	8	Table 12.2 -1
System Overstrength Factor,Ω	3	Table -1
Deflection Amplification Factor, Cd	5.5	Table -1

Base Shear (X-direction

Base Shear (Z-direction

PRELIMINARY - NOT FOR CONSTRUCTION

REV	DATE	BY	SUB	APP	DESCRIPTION

DESIGNED V. STEGMEIR
DRAWN M. LORENZ
CHECKED F. HAMMERS
IN CHARGE G. LUCKENBAUGH
DATE 5 DEC 2009

AFGHAN NATIONAL SECURITY FORCE
Comprehensive Plan for Facilities Development

MINISTRY OF INTERIOR (MoI) - AFGHAN NATIONAL POLICE
PROVINCIAL FIRE STATIONS

Code Summary

SCALE AS SHOWN

PROJECT NO. –

A_S001

N:\ANP FIRE STATIONS\~99%INITIAL_FSsA&B_091205\FSA_99%INITIAL_DrwgsInACAD\A_S001-CodeSummary.dwg 12/12/2009 10:45am CAD_9

3. Guard Shack

A) Dead Loads: The following dead loads were assumed for the design of the Guard Shack in accordance with IBC 2006 Section 1606.

Dead Load Summary

Slab-on-grade

Mechanical Systems	(100	Psf)	4.79

Elevated Roof Slab

Cold Form Steel Trusses	(	Psf)	0.19 kPa
Rigid insulation	(	Psf)	0.10 kPa
Sheathing and Felt Membrane	(	Psf)	0.19 kPa
Metal Decking	(	Psf)	0.10 kPa
Mechanical, Plumbing, Electrical	(8	Psf)	0.38
Σ =	(	Psf)	0.96 kPa

Wall System
Exterior

8	(105	Psf)	5.03
Stucco	(6	Psf)	0.29
Σ =	(111	Psf)	5.31

B) Roof Live Loads were determined in accordance with IBC 2006 Section 1607.11.1

Roof Live Loads

Uniform live load	(	Psf)	0.192 kPa

C) Snow Loads were determined in accordance with ASCE 7-05 Chapter 7

Ground Snow, p_g =	(41psf)	1.96	
Terrain Category =	C		
Roof Exposure =	Partially Exposed		
Thermal Condition =	Heated		
Building Category:	I		
Importance Factor, I =	1.0		Table -4
Exposure Factor, Ce =	1.		Table -2
Thermal Factor, Ct =	1.		Table -3

Flat Snow Loads, P_f = 0.7 $_eC_tIp_g$

P_f = (Psf) 1.65 Pa

Unbalanced snow loads were evaluated in accordance with ASCE 7, Sections 7.6

D) Wind Loads were determined in accordance with ASCE 7-05 Chapter 6

Wind Pressure – Main Wind Force Resisting System - Method -05

Terrain Category	=	C
Importance Factor, Iw	=	1.
Wind Speed	=	(100mph
Internal Pressure Coefficient GCpi	=	+/- 0.55
Wind Directionality Factor, Kd	=	0.85

Components and Cladding Wind Pressure per ASCE -05

Figure -11 - Walls - Enclosed and Partially Enclosed Bldgs

External Pressure Coeff. GC_p h < 18.3

	0.1^2 - 0.9^2	1.9^2	4.6^2	9.3^2	18.6^2	14.6^2 - 92.9^2
GC_p (	1	0.95	0.925	0.875	0.775	0.7
$p=q_h(GC_p-Gc_{pi})$, psf	0.40	0.35	0.33	0.29	0.20	0.13
$p=q_h(GC_p-(-Gc_{pi}))$, psf	1.37	1.33	1.31	1.26	1.17	1.11
GC_p (	-1.1	-1.05	-0.975	-0.95	-0.925	-0.8
$p=q_h(GC_p-Gc_{pi})$	-1.46	-1.42	-1.35	-1.33	-1.31	-1.20
$p=q_h(GC_p-(-Gc_{pi}))$	-0.49	-0.44	-0.38	-0.35	-0.33	-0.22
GC_p (	-1.4	-1.3	-1.15	-1.05	-0.95	-0.8
$p=q_h(GC_p-Gc_{pi})$	-1.73	-1.64	-1.51	-1.42	-1.33	-1.20
$p=q_h(GC_p-(-Gc_{pi}))$	-0.75	-0.66	-0.53	-0.44	-0.35	-0.22

Figure -11 - Roof - Enclosed and Partially Enclosed Bldgs

External Pressure Coeff. GC_p h < 18.3

	0.1^2 - 0.9^2	1.9^2	4.6^2	9.3^2	18.6^2	14.6^2 - 92.9^2
GC_p (	-0.9	-0.85	-0.825	-0.8	-0.8	-0.8
$p=q_h(GC_p-Gc_{pi})$	-0.22	-0.27	-0.29	-0.31	-0.31	-0.31
$p=q_h(GC_p-(-Gc_{pi}))$	0.75	0.71	0.69	0.66	0.66	0.66
GC_p (	-2.2	-2.2	-2.2	-2.2	-2.2	-2.2
$p=q_h(GC_p-Gc_{pi})$	-1.37	-1.35	-1.33	-1.28	-1.28	-1.28
$p=q_h(GC_p-(-Gc_{pi}))$	-0.40	-0.38	-0.35	-0.31	-0.31	-0.31

E) Seismic Loads were determined in accordance with ASCE 7-05 Chapters 11 and 12

IBC -05

12.8
Seismic Force Resisting System Design Criteria

Two Story Tower– Firestation A

Building Occupancy Categories	I		
Soil Site Class	D		Table -3-1
Seismic Importance Factor, Ie =	1.0		
Spectral Response Acc $_s$ =	128.00%	=	per USGS
Spectral Response Acc $_1$ =	51.00%	=	per USGS
Site Coefficient F_a =	1.050		Table -1
Site Coefficient F_v =	1.500		Table 11.4-2
Max Considered Earthquake Acc. S_{MS} =	$F_a.S_s$	=	(-1
Max Considered Earthquake Acc. S_M =	$F_v.S_1$	=	(-2
@ S_{DS} =	2/3 $_{MS}$)	=	(-3
S_D =	2/3 $_M$)	=	(-4

Design Category Consideration:

Seismic Design Category for $_{DS}$	D	Table -1
Seismic Design Category for	D	Table -2

Basic Seismic Resisting System – Special Reinforced Concrete Moment Frame

Response Modification Factor, R	8	Table -1
System Overstrength Factor,Ω	3	Table -1
Deflection Amplification Factor, Cd	5.5	Table -1

Base Shear (X-direction

Base Shear (Z-direction

4. Guard Tower

A) Dead Loads: The following dead loads were assumed for the design of the Guard Tower in accordance with IBC 2006 Section 1606.

Dead Load Summary

Slab-on-grade

Mechanical Systems	(100	Psf)	4.79

Elevated Roof Slab

Cold Form Steel Trusses	(	Psf)	0.19 kPa
Rigid insulation	(	Psf)	0.10 kPa
Sheathing and Felt Membrane	(	Psf)	0.19 kPa
Metal Decking	(	Psf)	0.10 kPa
Mechanical, Plumbing, Electrical	(8	Psf)	0.38
Σ =	(	Psf)	0.96 kPa

Wall System
Exterior

8	(105	Psf)	5.03
Stucco	(6	Psf)	0.29
Σ =	(111	Psf)	5.31

B) Floor Live Loads were calculated in accordance with IBC 2006 Section 1607
The following floor live loads were assumed for the design of the elevated floor structure:

Floor Live Load

Uniform Live Load	(	Psf)	4.89 kPa
Concentrated Live Load	(	lbs)	4.45 kPa

C) Roof Live Loads were determined in accordance with IBC 2006 Section 1607.11.1

Roof Live Loads

Uniform live load	(	Psf)	0.192 kPa

D) Snow Loads were determined in accordance with ASCE 7-05 Chapter 7

Ground Snow, p_g =	(41psf)	1.96	
Terrain Category =	C		
Roof Exposure =	Partially Exposed		
Thermal Condition =	Heated		
Building Category:	I		
Importance Factor, I =	1.0		Table -4
Exposure Factor, Ce =	1.		Table -2
Thermal Factor, Ct =	1.		Table -3

Flat Snow Loads, P_f = 0.7 $_eC_tIp_g$

P_f = (Psf) 1.65 Pa

Unbalanced snow loads were evaluated in accordance with ASCE 7, Sections 7.6

E) Wind Loads were determined in accordance with ASCE 7-05 Chapter 6

Wind Pressure – Main Wind Force Resisting System - Method -05

Terrain Category	=	C
Importance Factor, Iw	=	1.
Wind Speed	=	(100mph
Internal Pressure Coefficient GCpi	=	+/- 0.55
Wind Directionality Factor, Kd	=	0.85

Components and Cladding Wind Pressure per ASCE -05

Figure -11 - Walls - Enclosed and Partially Enclosed Bldgs

External Pressure Coeff. GC_p h < 18.3

	0.1^2 - 0.9^2	1.9^2	4.6^2	9.3^2	18.6^2	14.6^2 - 92.9^2
GC_p (	1	0.95	0.925	0.875	0.775	0.7
$p=q_h(GC_p-Gc_{pi})$, psf	0.46	0.41	0.38	0.33	0.23	0.15
$p=q_h(GC_p-(-Gc_{pi}))$, psf	1.58	1.53	1.51	1.45	1.35	1.28
GC_p (	-1.1	-1.05	-0.975	-0.95	-0.925	-0.8
$p=q_h(GC_p-Gc_{pi})$	-1.68	-1.63	-1.56	-1.53	-1.51	-1.38
$p=q_h(GC_p-(-Gc_{pi}))$	-0.56	-0.51	-0.43	-0.41	-0.38	-0.26
GC_p (	-1.4	-1.3	-1.15	-1.05	-0.95	-0.8
$p=q_h(GC_p-Gc_{pi})$	-1.99	-1.89	-1.74	-1.63	-1.53	-1.38
$p=q_h(GC_p-(-Gc_{pi}))$	-0.87	-0.77	-0.61	-0.51	-0.41	-0.26

Figure -11 - Roof - Enclosed and Partially Enclosed Bldgs

External Pressure Coeff. GC_p h < 18.3

	0.1^2 - 0.9^2	1.9^2	4.6^2	9.3^2	18.6^2	14.6^2 - 92.9^2
GC_p (	-0.9	-0.85	-0.825	-0.8	-0.8	-0.8
$p=q_h(GC_p-Gc_{pi})$	-1.48	-1.43	-1.40	-1.38	-1.38	-1.38
$p=q_h(GC_p-(-Gc_{pi}))$	-0.36	-0.31	-0.28	-0.26	-0.26	-0.26
GC_p (	-2.2	-2.2	-2.2	-2.2	-2.2	-2.2
$p=q_h(GC_p-Gc_{pi})$	-2.81	-2.81	-2.81	-2.81	-2.81	-2.81
$p=q_h(GC_p-(-Gc_{pi}))$	-1.68	-1.68	-1.68	-1.68	-1.68	-1.68

F) Seismic Loads were determined in accordance with ASCE 7-05 Chapters 11 and 12

IBC -05

12.8
Seismic Force Resisting System Design Criteria

Two Story Tower– Firestation A

Building Occupancy Categories	I		
Soil Site Class	D		Table -3-1
Seismic Importance Factor, Ie =	1.0		
Spectral Response Acc $_s$ =	128.00%	= 1.280	per USGS
Spectral Response Acc $_1$ =	51.00%	=	per USGS
Site Coefficient F_a =	1.050		Table -1
Site Coefficient F_v =	1.500		Table -2
Max Considered Earthquake Acc. S_{MS} =	$F_a.S_s$	=	(-1
Max Considered Earthquake Acc. S_M =	$F_v.S_1$	=	(-2
@ S_{DS} =	2/3 $_{MS}$)	=	(-3
S_D =	2/3 $_M$)	=	(-4

Design Category Consideration:

Seismic Design Category for $_{DS}$	D	Table -1
Seismic Design Category for	D	Table -2

Basic Seismic Resisting System – Special Reinforced Concrete Moment Frame

Response Modification Factor, R	8	Table -1
System Overstrength Factor,Ω	3	Table -1
Deflection Amplification Factor, Cd	5.5	Table -1

Base Shear (X-direction

Base Shear (Z-direction

PRELIMINARY - NOT FOR CONSTRUCTION

REV	DATE	BY	SUB	APP	DESCRIPTION

AFGHAN NATIONAL SECURITY FORCE
Comprehensive Plan for Facilities Development

MINISTRY OF INTERIOR (MoI) - AFGHAN NATIONAL POLICE
PROVINCIAL FIRE STATIONS

Code Summary

DESIGNED V. STEGMEIR
DRAWN M. LORENZ
CHECKED F. HAMMERS
IN CHARGE G. LUCKENBAUGH
DATE 5 DEC 2009

SCALE AS SHOWN

PROJECT NO. –

A_S002

N:\ANP FIRE STATIONS\~99%INITIAL_FSsA&B_091205\FSA_99%INITIAL_DrwgsInACAD\A_S002-CodeSummary.dwg 12/12/2009 10:46am CAD_9

5. Training Tower

A) Dead Loads: The following dead loads were assumed for the design of the Training Tower in accordance with IBC 2006 Section 1606.

Dead Load Summary

Slab-on-grade

Mechanical Systems	(100	Psf)	4.79

Elevated Roof Slab

Cold Form Steel Trusses	(	Psf)	0.19 kPa
Rigid insulation	(	Psf)	0.10 kPa
Sheathing and Felt Membrane	(	Psf)	0.19 kPa
Metal Decking	(	Psf)	0.10 kPa
Mechanical, Plumbing, Electrical	(8	Psf)	0.38
Σ =	(	Psf)	0.96 kPa

Wall System
Exterior

8	(105	Psf)	5.03
Stucco	(6	Psf)	0.29
Σ =	(111	Psf)	5.31 Pa

B) Floor Live Loads were calculated in accordance with IBC 2006 Section 1607
The following floor live loads were assumed for the design of the elevated floor structure:

Floor Live Load

Uniform Live Load	(	Psf)	4.89 kPa
Concentrated Live Load	(	lbs)	4.45 kPa

C) Roof Live Loads were determined in accordance with IBC 2006 Section 1607.11.1

Roof Live Loads

Uniform live load (Psf) 0.192 kPa

D) Snow Loads were determined in accordance with ASCE 7-05 Chapter 7

Ground Snow, p_g =	(41psf)	1.96
Terrain Category =	C	
Roof Exposure =	Partially Exposed	
Thermal Condition =	Unheated	
Building Category:	I	
Importance Factor, I =	1.0	Table -4
Exposure Factor, Ce =	1.	Table -2
Thermal Factor, Ct =	1.	Table -3

Flat Snow Loads, P_f = 0.7 $_eC_tIp_g$

P_f = (Psf) 1.97 Pa

Unbalanced snow loads were evaluated in accordance with ASCE 7, Sections 7.6

E) Wind Loads were determined in accordance with ASCE 7-05 Chapter 6

Wind Pressure – Main Wind Force Resisting System - Method -05

Terrain Category	=	C
Importance Factor, Iw	=	1.
Wind Speed	=	(100mph
Internal OPressure Coefficient GCpi	=	+/- 0.55
Wind Directionality Factor, Kd	=	0.85

Components and Cladding Wind Pressure per ASCE -05

Figure -11 - Walls - Enclosed and Partially Enclosed Bldgs

External Pressure Coeff. GC_p h < 18.3

	$0.1^2 - 0.9^2$	1.9^2	4.6^2	9.3^2	18.6^2	$14.6^2 - 92.9^2$
GC_p (	1	0.95	0.925	0.875	0.775	0.7
$p=q_h(GC_p-Gc_{pi})$, psf	0.46	0.41	0.38	0.33	0.23	0.15
$p=q_h(GC_p-(-Gc_{pi}))$, psf	1.58	1.53	1.51	1.45	1.35	1.28
GC_p (	-1.1	-1.05	-0.975	-0.95	-0.925	-0.8
$p=q_h(GC_p-Gc_{pi})$	-1.68	-1.63	-1.56	-1.53	-1.51	-1.38
$p=q_h(GC_p-(-Gc_{pi}))$	-0.56	-0.51	-0.43	-0.41	-0.38	-0.26
GC_p (	-1.4	-1.3	-1.15	-1.05	-0.95	-0.8
$p=q_h(GC_p-Gc_{pi})$	-1.99	-1.89	-1.74	-1.63	-1.53	-1.38
$p=q_h(GC_p-(-Gc_{pi}))$	-0.87	-0.77	-0.61	-0.51	-0.41	-0.26

Figure -11 - Roof - Enclosed and Partially Enclosed Bldgs

External Pressure Coeff. GC_p h < 18.3

	$0.1^2 - 0.9^2$	1.9^2	4.6^2	9.3^2	18.6^2	$14.6^2 - 92.9^2$
GC_p (	-0.9	-0.85	-0.825	-0.8	-0.8	-0.8
$p=q_h(GC_p-Gc_{pi})$	-1.48	-1.43	-1.40	-1.38	-1.38	-1.38
$p=q_h(GC_p-(-Gc_{pi}))$	-0.36	-0.31	-0.28	-0.26	-0.26	-0.26
GC_p (	-2.2	-2.2	-2.2	-2.2	-2.2	-2.2
$p=q_h(GC_p-Gc_{pi})$	-2.81	-2.81	-2.81	-2.81	-2.81	-2.81
$p=q_h(GC_p-(-Gc_{pi}))$	-1.68	-1.68	-1.68	-1.68	-1.68	-1.68

F) Seismic Loads were determined in accordance with ASCE 7-05 Chapters 11 and 12

IBC -05

12.8
Seismic Force Resisting System Design Criteria

Building Occupancy Categories	I		
Soil Site Class	D		Table -3-1
Seismic Importance Factor, Ie =	1.0		
Spectral Response Acc $_s$ =	128.00%	=	per USGS
Spectral Response Acc $_1$ =	51.00%	=	per USGS
Site Coefficient F_a =	1.050		Table -1
Site Coefficient F_v =	1.500		Table -2
Max Considered Earthquake Acc. S_{MS} =	$F_a.S_s$	=	(-1
Max Considered Earthquake Acc. S_M =	$F_v.S_1$	=	(-2
@ S_{DS} =	2/3 $_{MS}$)	=	(-3
S_D =	2/3 $_M$)	=	(-4

Design Category Consideration:

Seismic Design Category for $_{DS}$	D	Table -1
Seismic Design Category for	D	Table -2

Basic Seismic Resisting System – Special Reinforced Concrete Moment Frame

Response Modification Factor, R	8	Table -1
System Overstrength Factor,Ω	3	Table 12.2 -1
Deflection Amplification Factor, Cd	5.5	Table -1

Base Shear (X-direction

Base Shear (Z-direction

6. Guard House

A) Dead Loads: The following dead loads were assumed for the design of the Guard House in accordance with IBC 2006 Section 1606.

Dead Load Summary

Slab-on-grade

Mechanical Systems	(100	Psf)	4.79

Elevated Roof Slab

Cold Form Steel Trusses	(	Psf)	0.19 kPa
Rigid insulation	(	Psf)	0.10 kPa
Sheathing and Felt Membrane	(	Psf)	0.19 kPa
Metal Decking	(	Psf)	0.10 kPa
Mechanical, Plumbing, Electrical	(8	Psf)	0.38
Σ =	(	Psf)	0.96 kPa

Wall System
Exterior

8	(105	Psf)	5.03
Stucco	(6	Psf)	0.29
Σ =	(111	Psf)	5.31

B) Roof Live Loads were determined in accordance with IBC 2006 Section 1607.11.1

Roof Live Loads

Uniform live load (Psf) 0.192 kPa

C) Snow Loads were determined in accordance with ASCE 7-05 Chapter 7

Ground Snow, p_g =	(41psf)	1.96
Terrain Category =	C	
Roof Exposure =	Partially Exposed	
Thermal Condition =	Heated	
Building Category:	I	
Importance Factor, I =	1.0	Table -4
Exposure Factor, Ce =	1.	Table -2
Thermal Factor, Ct =	1.	Table -3

Flat Snow Loads, P_f = 0.7 $_eC_tIp_g$

P_f = (Psf) 1.65 Pa

Unbalanced snow loads were evaluated in accordance with ASCE 7, Sections 7.6

D) Wind Loads were determined in accordance with ASCE 7-05 Chapter 6

Wind Pressure – Main Wind Force Resisting System - Method -05

Terrain Category	=	C
Importance Factor, Iw	=	1.
Wind Speed	=	(100mph
Internal Pressure Coefficient GCpi	=	+/- 0.55
Wind Directionality Factor, Kd	=	0.85

Components and Cladding Wind Pressure per ASCE -05

Figure -11 - Walls - Enclosed and Partially Enclosed Bldgs

External Pressure Coeff. GC_p h < 18.3

	$0.1^2 - 0.9^2$	1.9^2	4.6^2	9.3^2	18.6^2	$14.6^2 - 92.9^2$
GC_p (	1	0.95	0.925	0.875	0.775	0.7
$p=q_h(GC_p-Gc_{pi})$, psf	0.40	0.35	0.33	0.29	0.20	0.13
$p=q_h(GC_p-(-Gc_{pi}))$, psf	1.37	1.33	1.31	1.26	1.17	1.11
GC_p (	-1.1	-1.05	-0.975	-0.95	-0.925	-0.8
$p=q_h(GC_p-Gc_{pi})$	-1.46	-1.42	-1.35	-1.33	-1.31	-1.20
$p=q_h(GC_p-(-Gc_{pi}))$	-0.49	-0.44	-0.38	-0.35	-0.33	-0.22
GC_p (	-1.4	-1.3	-1.15	-1.05	-0.95	-0.8
$p=q_h(GC_p-Gc_{pi})$	-1.73	-1.64	-1.51	-1.42	-1.33	-1.20
$p=q_h(GC_p-(-Gc_{pi}))$	-0.75	-0.66	-0.53	-0.44	-0.35	-0.22

Figure -11 - Roof - Enclosed and Partially Enclosed Bldgs

External Pressure Coeff. GC_p h < 18.3

	$0.1^2 - 0.9^2$	1.9^2	4.6^2	9.3^2	18.6^2	$14.6^2 - 92.9^2$
GC_p (	-0.9	-0.85	-0.825	-0.8	-0.8	-0.8
$p=q_h(GC_p-Gc_{pi})$	-0.22	-0.27	-0.29	-0.31	-0.31	-0.31
$p=q_h(GC_p-(-Gc_{pi}))$	0.75	0.71	0.69	0.66	0.66	0.66
GC_p (	-2.2	-2.2	-2.2	-2.2	-2.2	-2.2
$p=q_h(GC_p-Gc_{pi})$	-1.37	-1.35	-1.33	-1.28	-1.28	-1.28
$p=q_h(GC_p-(-Gc_{pi}))$	-0.40	-0.38	-0.35	-0.31	-0.31	-0.31

E) Seismic Loads were determined in accordance with ASCE 7-05 Chapters 11 and 12

IBC -05

12.8
Seismic Force Resisting System Design Criteria

Building Occupancy Categories	I		
Soil Site Class	D		Table -3-1
Seismic Importance Factor, Ie =	1.0		
Spectral Response Acc $_s$ =	128.00%	=	per USGS
Spectral Response Acc $_1$ =	51.00%	=	per USGS
Site Coefficient F_a =	1.050		Table -1
Site Coefficient F_v =	1.500		Table -2
Max Considered Earthquake Acc. S_{MS} =	$F_a.S_s$	=	(-1
Max Considered Earthquake Acc. S_M =	$F_v.S_1$	=	(-2
@ S_{DS} =	2/3 $_{MS}$)	=	(-3
S_D =	2/3 $_M$)	=	(-4

Design Category Consideration:

Seismic Design Category for $_{DS}$	D	Table -1
Seismic Design Category for	D	Table -2

Basic Seismic Resisting System – Special Reinforced Concrete Moment Frame

Response Modification Factor, R	8	Table -1
System Overstrength Factor,Ω	3	Table 12.2 -1
Deflection Amplification Factor, Cd	5.5	Table -1

Base Shear (X-direction

Base Shear (Z-direction

PRELIMINARY - NOT FOR CONSTRUCTION

DESCRIPTION
REV DATE BY SUB APP

DESIGNED V. STEGMEIR
DRAWN M. LORENZ
CHECKED F. HAMMERS
IN CHARGE G. LUCKENBAUGH
DATE 5 DEC 2009

AFGHAN NATIONAL SECURITY FORCE
Comprehensive Plan for Facilities Development

MINISTRY OF INTERIOR (MoI) - AFGHAN NATIONAL POLICE
PROVINCIAL FIRE STATIONS

Code Summary

SCALE AS SHOWN

PROJECT NO. –

A_S003

N:\ANP FIRE STATIONS\~99%INITIAL_FSsA&B_091205\FSA_99%INITIAL_DrwgsInACAD\A_S003–CodeSummary.dwg 12/12/2009 10:47am CAD_9

7. Stove House

A) Dead Loads: The following dead loads were assumed for the design of the Stove House in accordance with IBC 2006 Section 1606.

Dead Load Summary

Slab-on-grade

Mechanical Systems	(100	Psf)	4.79

Elevated Roof Slab

Steel Roof Framing	(	Psf)	0.29 kPa
Rigid Insulation	(	Psf)	0.19 kPa
Metal Decking	(	Psf)	0.10 kPa
Mechanical, Plumbing, Electrical	(8	Psf)	0.38
Σ =	(	Psf)	0.96 kPa

Wall System
Exterior

8	(105	Psf)	5.03
Stucco	(6	Psf)	0.29
Σ =	(111	Psf)	5.31

B) Roof Live Loads were determined in accordance with IBC 2006 Section 1607.11.1

Roof Live Loads

Uniform live load (Psf) 0.192 kPa

C) Snow Loads were determined in accordance with ASCE 7-05 Chapter 7

Ground Snow, p_g =	(41psf)	1.96
Terrain Category =	C	
Roof Exposure =	Partially Exposed	
Thermal Condition =	Heated	
Building Category:	I	
Importance Factor, I =	1.0	Table -4
Exposure Factor, Ce =	1.	Table -2
Thermal Factor, Ct =	1.	Table -3

Flat Snow Loads, P_f = 0.7 $_eC_tIp_g$

P_f = (Psf) 1.65 Pa

Unbalanced snow loads were evaluated in accordance with ASCE 7, Sections 7.6

D) Wind Loads were determined in accordance with ASCE 7-05 Chapter 6

Wind Pressure – Main Wind Force Resisting System - Method -05

Terrain Category	=	C
Importance Factor, Iw	=	1.
Wind Speed	=	(100mph
Internal Pressure Coefficient GCpi	=	+/- 0.55
Wind Directionality Factor, Kd	=	0.85

Components and Cladding Wind Pressure per ASCE -05

Figure -11 - Walls - Enclosed and Partially Enclosed Bldgs

External Pressure Coeff. GC_p h < 18.3

	0.1 ^{2} - 0.9 ^{2}	1.9 ^{2}	4.6 ^{2}	9.3 ^{2}	18.6 ^{2}	14.6 ^{2} - 92.9 ^{2}
GC_p (	1	0.95	0.925	0.875	0.775	0.7
$p=q_h(GC_p-Gc_{pi})$, psf	0.40	0.35	0.33	0.29	0.20	0.13
$p=q_h(GC_p-(-Gc_{pi}))$, psf	1.37	1.33	1.31	1.26	1.17	1.11
GC_p (	-1.1	-1.05	-0.975	-0.95	-0.925	-0.8
$p=q_h(GC_p-Gc_{pi})$	-1.46	-1.42	-1.35	-1.33	-1.31	-1.20
$p=q_h(GC_p-(-Gc_{pi}))$	-0.49	-0.44	-0.38	-0.35	-0.33	-0.22
GC_p (	-1.4	-1.3	-1.15	-1.05	-0.95	-0.8
$p=q_h(GC_p-Gc_{pi})$	-1.73	-1.64	-1.51	-1.42	-1.33	-1.20
$p=q_h(GC_p-(-Gc_{pi}))$	-0.75	-0.66	-0.53	-0.44	-0.35	-0.22

Figure -11 - Roof - Enclosed and Partially Enclosed Bldgs

External Pressure Coeff. GC_p h < 18.3

	0.1 ^{2} - 0.9 ^{2}	1.9 ^{2}	4.6 ^{2}	9.3 ^{2}	18.6 ^{2}	14.6 ^{2} - 92.9 ^{2}
GC_p (	-0.9	-0.85	-0.825	-0.8	-0.8	-0.8
$p=q_h(GC_p-Gc_{pi})$	-0.22	-0.27	-0.29	-0.31	-0.31	-0.31
$p=q_h(GC_p-(-Gc_{pi}))$	0.75	0.71	0.69	0.66	0.66	0.66
GC_p (	-2.2	-2.2	-2.2	-2.2	-2.2	-2.2
$p=q_h(GC_p-Gc_{pi})$	-1.37	-1.35	-1.33	-1.28	-1.28	-1.28
$p=q_h(GC_p-(-Gc_{pi}))$	-0.40	-0.38	-0.35	-0.31	-0.31	-0.31

E) Seismic Loads were determined in accordance with ASCE 7-05 Chapters 11 and 12

IBC -05

12.8
Seismic Force Resisting System Design Criteria

Building Occupancy Categories	I			
Soil Site Class	D	Table -3-1		
Seismic Importance Factor, Ie =	1.0			
Spectral Response Acc $_s$ =	128.00%	=		per USGS
Spectral Response Acc $_1$ =	51.00%	=		per USGS
Site Coefficient F_a =	1.050		Table -1	
Site Coefficient F_v =	1.500		Table -2	
Max Considered Earthquake Acc. S_{MS} =	$F_a.S_s$	=	(-1	
Max Considered Earthquake Acc. S_M =	$F_v.S_1$	=	(-2	
@ S_{DS} =	2/3 $_{MS}$)	=	(-3	
S_D =	2/3 $_M$)	=	(-4	

Design Category Consideration:

Seismic Design Category for $_{DS}$	D	Table -1
Seismic Design Category for	D	Table -2

Basic Seismic Resisting System – Special Reinforced Masonry Shear Walls

Response Modification Factor, R	5	Table -1
System Overstrength Factor,Ω	2.5	Table 12.2 -1
Deflection Amplification Factor, Cd	3.5	Table -1

Base Shear (X-direction

Base Shear (Z-direction

Note **Section**

8. Power House

A) Dead Loads: The following dead loads were assumed for the design of the Power House in accordance with IBC 2006 Section 1606.

Dead Load Summary

Slab-on-grade

Mechanical Systems	(100	Psf)	4.79

Elevated Roof Slab

Cold Form Steel Trusses	(	Psf)	0.19 kPa
Rigid insulation	(	Psf)	0.10 kPa
Sheathing and Felt Membrane	(	Psf)	0.19 kPa
Metal Decking	(	Psf)	0.10 kPa
Mechanical, Plumbing, Electrical	(8	Psf)	0.38
Σ =	(	Psf)	0.96 kPa

Wall System
Exterior

8	(105	Psf)	5.03
Stucco	(6	Psf)	0.29
Σ =	(111	Psf)	5.31

B) Roof Live Loads were determined in accordance with IBC 2006 Section 1607.11.1

Roof Live Loads

Uniform live load (Psf) 0.192 kPa

C) Snow Loads were determined in accordance with ASCE 7-05 Chapter 7

Ground Snow, p_g =	(41psf)	1.96
Terrain Category =	C	
Roof Exposure =	Partially Exposed	
Thermal Condition =	Unheated	
Building Category:	I	
Importance Factor, I =	1.0	Table -4
Exposure Factor, Ce =	1.	Table -2
Thermal Factor, Ct =	1.	Table -3

Flat Snow Loads, P_f = 0.7 $_eC_tIp_g$

P_f = (Psf) 1.98 Pa

Unbalanced snow loads were evaluated in accordance with ASCE 7, Sections 7.6

D) Wind Loads were determined in accordance with ASCE 7-05 Chapter 6

Wind Pressure – Main Wind Force Resisting System - Method -05

Terrain Category	=	C
Importance Factor, Iw	=	1.
Wind Speed	=	(100mph
Internal Pressure Coefficent GCpi	=	+/- 0.55
Wind Directionality Factor, Kd	=	0.85

Components and Cladding Wind Pressure per ASCE -05

Figure -11 - Walls - Enclosed and Partially Enclosed Bldgs

External Pressure Coeff. GC_p h < 18.3

	0.1 ^{2} - 0.9 ^{2}	1.9 ^{2}	4.6 ^{2}	9.3 ^{2}	18.6 ^{2}	14.6 ^{2} - 92.9 ^{2}
GC_p (	1	0.95	0.925	0.875	0.775	0.7
$p=q_h(GC_p-Gc_{pi})$, psf	0.40	0.35	0.33	0.29	0.20	0.13
$p=q_h(GC_p-(-Gc_{pi}))$, psf	1.37	1.33	1.31	1.26	1.17	1.11
GC_p (	-1.1	-1.05	-0.975	-0.95	-0.925	-0.8
$p=q_h(GC_p-Gc_{pi})$	-1.46	-1.42	-1.35	-1.33	-1.31	-1.20
$p=q_h(GC_p-(-Gc_{pi}))$	-0.49	-0.44	-0.38	-0.35	-0.33	-0.22
GC_p (	-1.4	-1.3	-1.15	-1.05	-0.95	-0.8
$p=q_h(GC_p-Gc_{pi})$	-1.73	-1.64	-1.51	-1.42	-1.33	-1.20
$p=q_h(GC_p-(-Gc_{pi}))$	-0.75	-0.66	-0.53	-0.44	-0.35	-0.22

Figure -11 - Roof - Enclosed and Partially Enclosed Bldgs

External Pressure Coeff. GC_p h < 18.3

	0.1 ^{2} - 0.9 ^{2}	1.9 ^{2}	4.6 ^{2}	9.3 ^{2}	18.6 ^{2}	14.6 ^{2} - 92.9 ^{2}
GC_p (	-0.9	-0.85	-0.825	-0.8	-0.8	-0.8
$p=q_h(GC_p-Gc_{pi})$	-0.22	-0.27	-0.29	-0.31	-0.31	-0.31
$p=q_h(GC_p-(-Gc_{pi}))$	0.75	0.71	0.69	0.66	0.66	0.66
GC_p (	-2.2	-2.2	-2.2	-2.2	-2.2	-2.2
$p=q_h(GC_p-Gc_{pi})$	-1.37	-1.35	-1.33	-1.28	-1.28	-1.28
$p=q_h(GC_p-(-Gc_{pi}))$	-0.40	-0.38	-0.35	-0.31	-0.31	-0.31

E) Seismic Loads were determined in accordance with ASCE 7-05 Chapters 11 and 12

IBC -05

12.8
Seismic Force Resisting System Design Criteria

Building Occupancy Categories	I			
Soil Site Class	D	Table -3-1		
Seismic Importance Factor, Ie =	1.0			
Spectral Response Acc s =	128.00%	=		per USGS
Spectral Response Acc 1 =	51.00%	=		per USGS
Site Coefficient Fa =	1.050		Table -1	
Site Coefficient F_v =	1.500		Table -2	
Max Considered Earthquake Acc. S_{MS} =	$F_a.S_s$	=	(-1	
Max Considered Earthquake Acc. S_M =	$F_v.S_1$	=	(-2	
@ S_{DS} =	2/3 $_{MS}$)	=	(-3	
S_D =	2/3 $_M$)	=	(-4	

Design Category Consideration:

Seismic Design Category for 0.2 $_{DS}$	D	Table -1
Seismic Design Category for	D	Table -2

Basic Seismic Resisting System – Special Reinforced Concrete Moment Frame

Response Modification Factor, R	8	Table -1
System Overstrength Factor,Ω	3	Table -1
Deflection Amplification Factor, Cd	5.5	Table -1

Base Shear (X-direction

Base Shear (Z-direction

Footing Schedule

Mark	FTG. SIZE			STEEL REINFORCING		REMARKS
	WIDTH B (mm)	WIDTH L (mm)	THICKNESS (t)	SIZE	No.	
F3	950	950	300	#16	4	
F35	1100	1100	300	#16	4	
F4	1250	1250	300	#16	5	
F45	1400	1400	300	#16	5	EW - BOTT U.N.O.
F5	1550	1550	300	#16	5	
F55	1700	1700	300	#16	5	
F6	1850	1850	300	#16	6	
F6A	1850	1850	300	#16	6	EW - T & B
F65	2000	2000	300	#16	6	
F7	2150	2150	325	#16	6	
F75	2300	2300	350	#16	6	
F8	2450	2450	375	#16	7	
F85	2600	2600	400	#16	7	
F9	2750	2750	425	#16	8	
F95	2900	2900	450	#16	9	EW - T & B
F10	3050	3050	475	#19	7	
F105	3200	3200	500	#19	8	
F110	3350	3350	525	#19	9	
F115	3500	3500	550	#19	9	
F120	3650	3650	575	#19	10	
F125	3800	3800	600	#19	11	
F130	3950	3950	625	#19	11	
F135	4100	4100	650	#22	12	
F140	4250	4250	675	#22	10	
F145	4400	4400	700	#22	10	
F150	4550	4550	725	#22	11	
F155	4700	4700	750	#22	11	
F160	4850	4850	775	#22	12	

PRELIMINARY - NOT FOR CONSTRUCTION

REV DATE BY SUBAPP DESCRIPTION

DESIGNED V. STEGMEIR
DRAWN M. LORENZ
CHECKED F. HAMMERS
IN CHARGE G. LUCKENBAUGH
DATE 5 DEC 2009

AFGHAN NATIONAL SECURITY FORCE
Comprehensive Plan for Facilities Development

MINISTRY OF INTERIOR (MoI) - AFGHAN NATIONAL POLICE
PROVINCIAL FIRE STATIONS

Code Summary

SCALE AS SHOWN

PROJECT NO. –

A_S004

N:\ANP FIRE STATIONS\~99%INITIAL_FSsA&B_091205\FSA_99%INITIAL_DrwgsinACAD\A_S004--CodeSummary.dwg 12/12/2009 10:47am CAD_9

TYPICAL CMU REINFORCING SCHEDULE						
WALL TYPE OR LOCATION	WALL THICKNESS	CONT.VERT. REINF.(CENTERED) IN CMU,U.N.O	CONT.CAST IN PLACE LINTEL(CIPL)			REMARKS
			DEPTH	REIN. (BOT U.N.O)	MAX.CIPL VERT.SPACING	
WALL TYPE OR LOCATION	200	1 # @600	200	2 # 16	1200	-
WALL TYPE OR LOCATION						

NOTES:
1. REINFORCING SIZES AND SPACING GIVING IN SECTIONS AND DETAILS SHALL SUPERSEDE THE ABOVE SCHEDULE REQUIREMENTS.
2. PROVIDE CONTINUOUS CAST IN PLACE CONCRETE LINTEL AT ALL WALL LATERAL SUPPORT LOCATIONS.
3. REINFORCING INDICATED SHALL BEE CONTINUOUS FOR FULL EXTENT O F SPLICE FOLLOWING THE REQUIREMENTS OF THE LAP SPLICE TABLE SHOWN ON THIS SHEET.
4. WALLS HAVE BEEN DESIGNATED AS VERTICALLY SPANNING U.N.O AND THEREFORE MUST BE TEMPORARILY SUPPORTED CURING CONSTRUCTION UNTIL THE SUPPORTING DIAPHRAGMS(FLOOR AND ROOF SYSTEMS) HAVE BEEN COMPLETELY INSTALLED. SHORING IS THE RESPONSIBILITY OF THE CONTRACTOR.
5. ALL CMU WALLS SHALL BE FULLY GROUTED IN LIFTS NOT EXCEEDING THOSCODE)UNO).

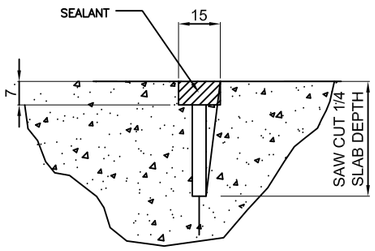

CONCRETE JOINT DETAIL
Scale: NTS

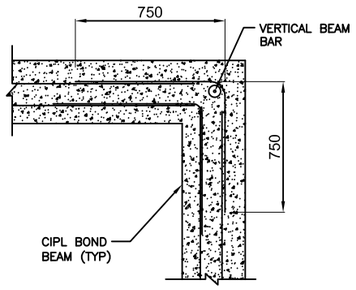

BOND BEAM CORNER
DETAIL –D (D / A_S005)
Scale: NTS

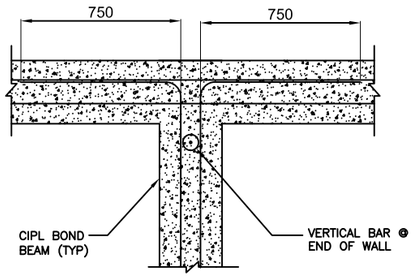

BOND BEAM INTERSECTION
DETAIL –E (E / A_S005)
Scale: NTS

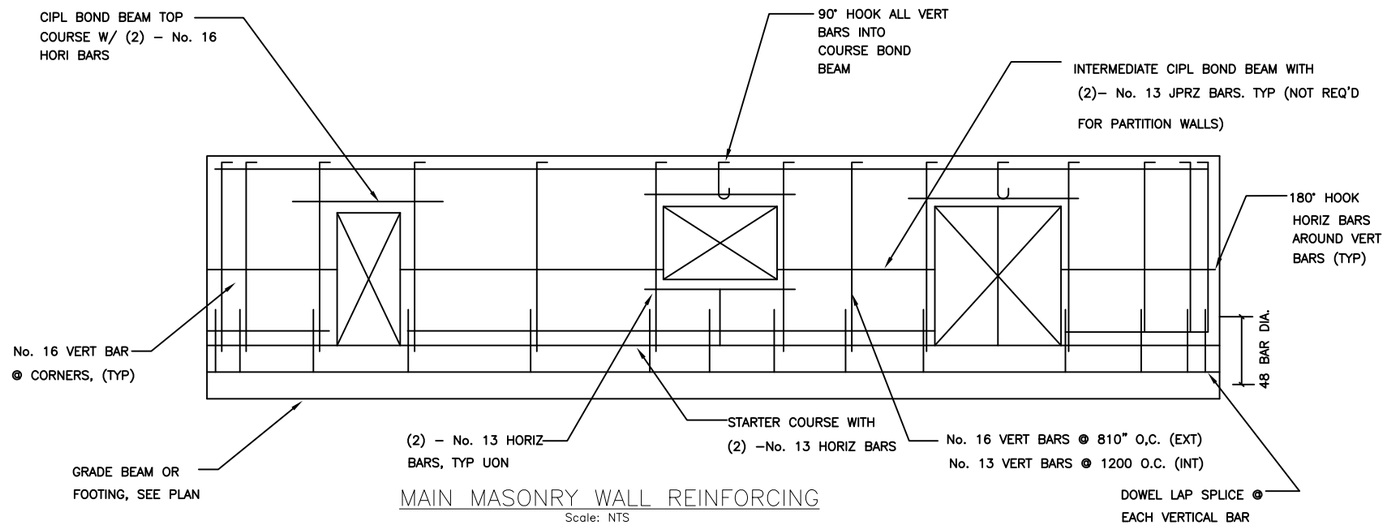

MAIN MASONRY WALL REINFORCING
Scale: NTS

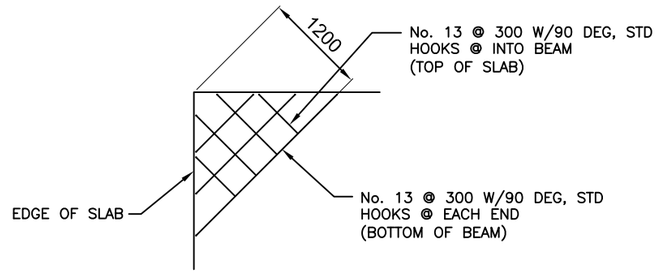

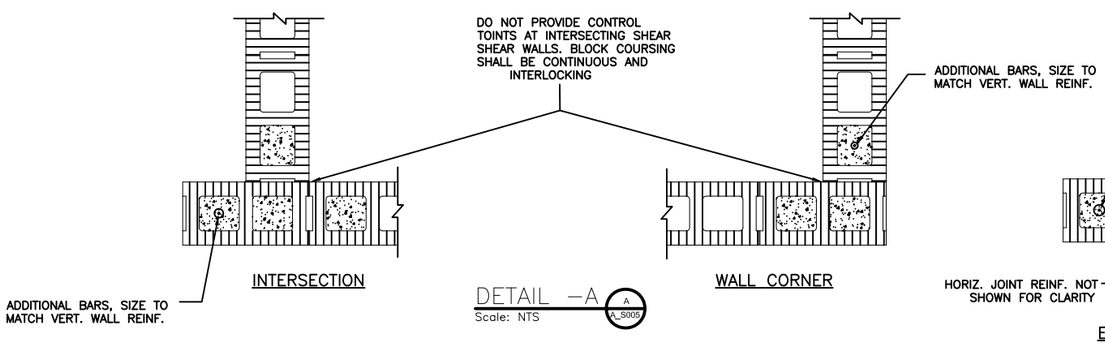

DETAIL –A (A / A_S005)
Scale: NTS

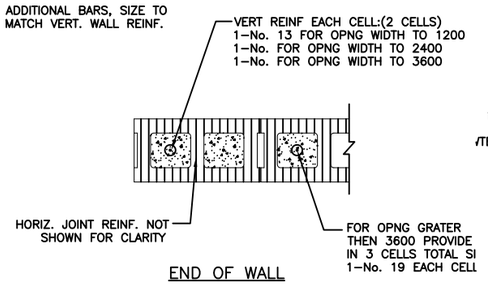

END OF WALL
DETAIL –C (C / A_S005)
Scale: NTS

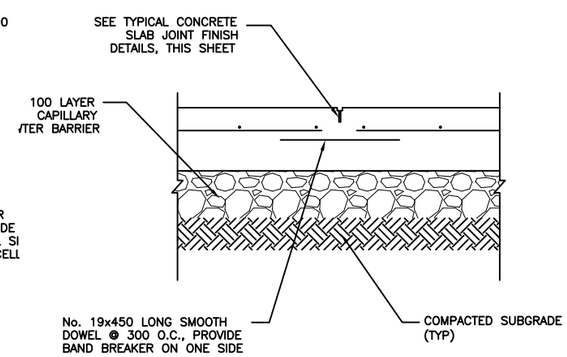

CONSTRUCTION JOINT DETAIL (CTJ)
Scale: NTS

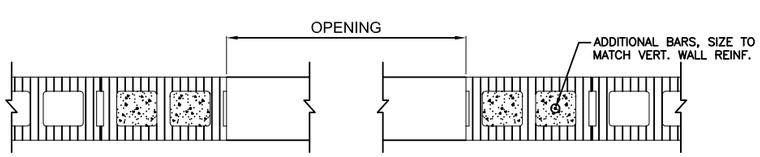

DETAIL –B (B / A_S005)
Scale: NTS

MASONRY OPENING W/ LINTEL

TYPICAL CONCRETE MASONRY UNIT JOINTS

NOTE:
OPNG WIDTH SHALL NOT EXCEED 3600 FOR THIS TYPE OF JAMB

PRELIMINARY - NOT FOR CONSTRUCTION

REV	DATE	BY	SUB	APP	DESCRIPTION

DESIGNED V. STIGMEIR
DRAWN M. LOERNZ
CHECKED F. HAMMERS
IN CHARGE G. LUCKENBAUGH
DATE 5 DEC 2009

AFGHAN NATIONAL SECURITY FORCE
Comprehensive Plan for Facilities Development
MINISTRY OF INTERIOR (MoI) - AFGHAN NATIONAL POLICE
PROVINCIAL FIRE STATION TYPE-B
Structural Details

SCALE AS SHOWN
PROJECT NO. –
A_S005

N:\ANP FIRE STATIONS\~8929INITIAL_FSs\A&B_091205\FSB_8929INITIAL_Drwgs\in\ACAD\A_S005-StructuralDetails.dwg 01/31/2010 9:25am CAD_9

NOTES:

1. ALL FOUNDATIONS ASSUMED TO BEAR AT -950mm BELOW DATUM 0+00.
2. REFER TO CONCRETE FTG. SCHEDULE FOR FTG SIZES & REINFORCING.
3. CONTRACTOR SHALL COORDINATE ALL THICKENED SLAB LOCATIONS, SLAB PENETRATIONS & DEPRESSIONS WITH ARCHITECTURAL & MEP DISCIPLINES.
4. FOR COMBINED FTG. SIZES, REINFORCING, & GEOMETRY REFER TO SHEET A_S108.

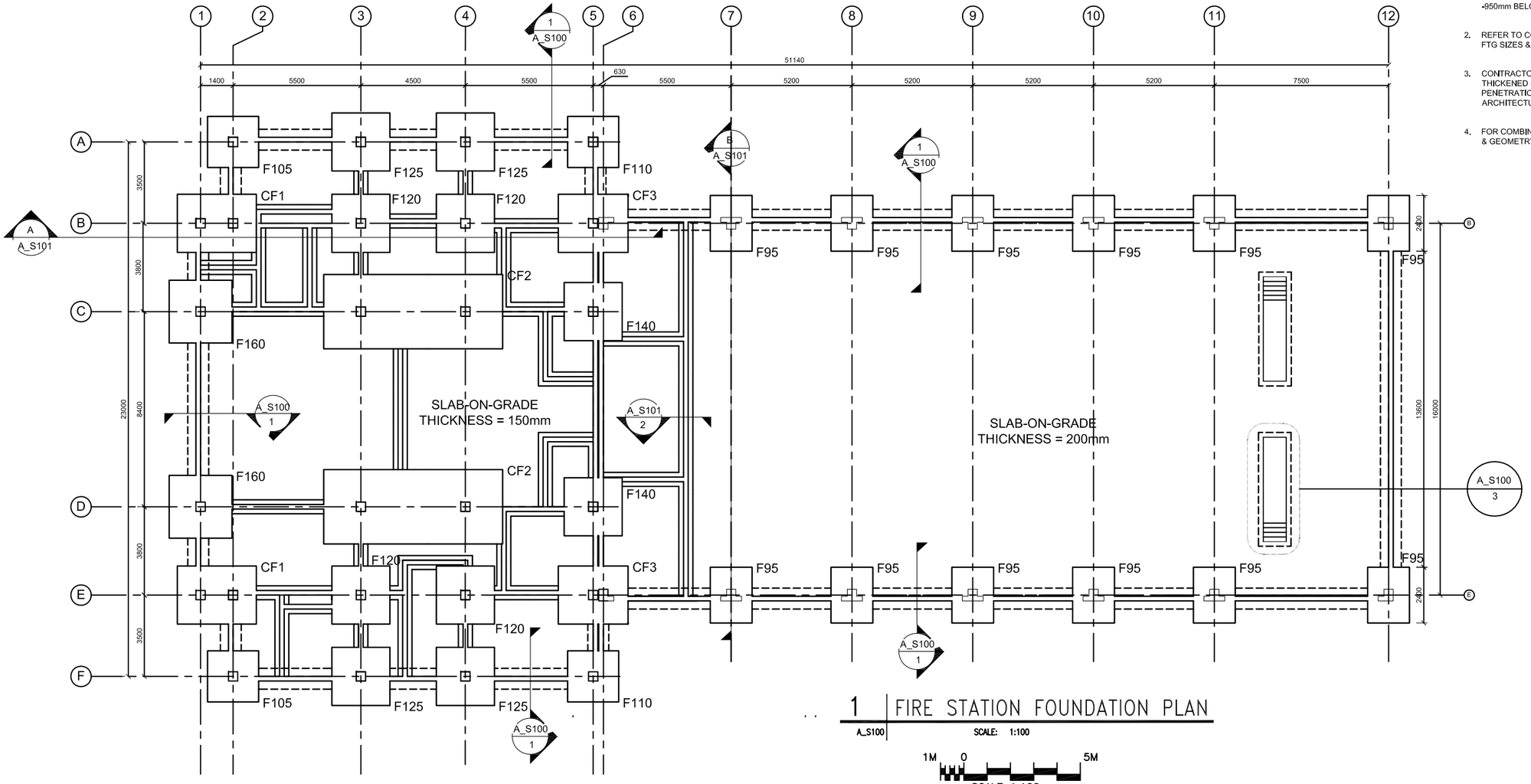

1 FIRE STATION FOUNDATION PLAN
A_S100
SCALE: 1:100

1M 0 5M
SCALE 1:100

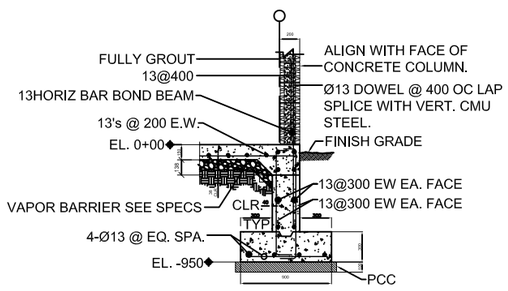

NOTES:

1. NO MASONARY AT SIMILAR SECTION.
2. SLAB THICKNESS IS 200mm AT VEHICLE BAY SECTIONS.

1 AS100 SECTION - 1

1.5M 0 7.5M
SCALE 1:150

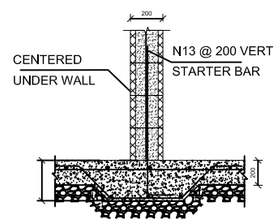

2 AS100 SECTION- 2

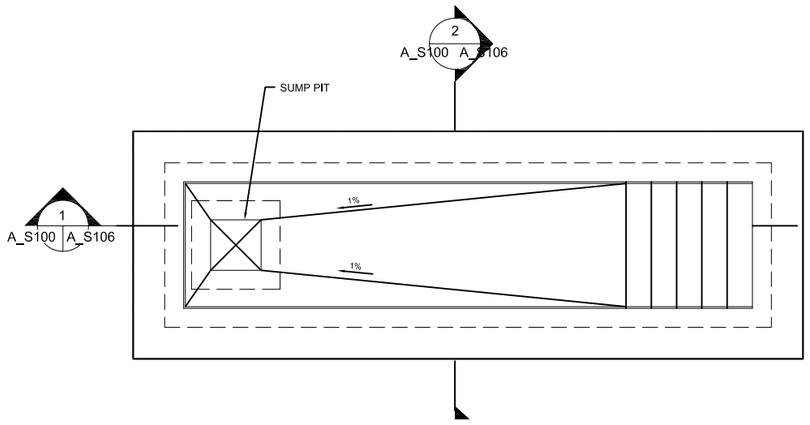

3 AS100 VEHICLE PIT DETAIL

PRELIMINARY - NOT FOR CONSTRUCTION

REV	DATE	BY	SUB	APP	DESCRIPTION

DESIGNED V. STEGMEIR
DRAWN M. LORENZ
CHECKED F. HAMMERS
IN CHARGE G. LUCKENBAUGH
DATE 05 DEC 2009

AFGHAN NATIONAL SECURITY FORCE
Comprehensive Plan for Facilities Development
MINISTRY OF INTERIOR (MoI) - AFGHAN NATIONAL POLICE
PROVINCIAL FIRE STATION TYPE-B
Foundation Plan

SCALE AS SHOWN
PROJECT NO. -
A_S100

H:\AKP FIRE STATIONS\~0999INTIAL_FSnAB_091205\FSB_0999INTIAL_Dwgs\CAD\A_S100 Foundation Plan.dwg 01/31/2010 10:04am CAD_9

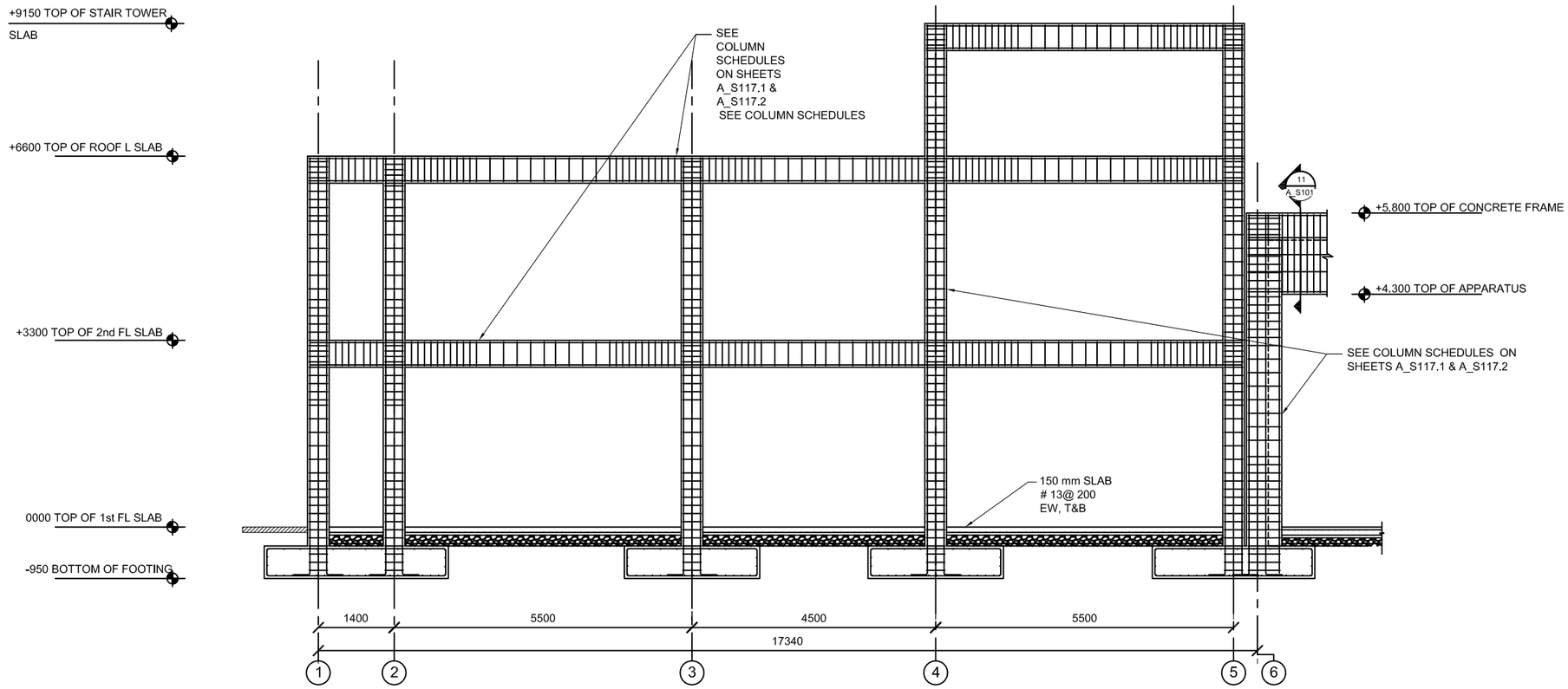

A | SECTION A OF FRAME -B

A_S101

SCALE: NOTED

0.5M 0 2.5M

SCALE 1:50

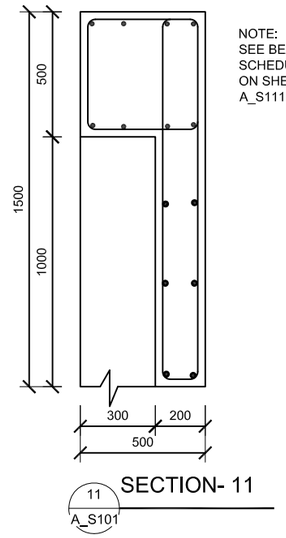

SECTION- 11

NOTE:
SEE BEAM SCHEDULE ON SHEET A_S111

PRELIMINARY - NOT FOR CONSTRUCTION

REV	DATE	BY	SUB	APP	DESCRIPTION

DESIGNED V. STEGMEIR
DRAWN M. LORENZ
CHECKED F. HAMMERS
IN CHARGE G. LUCKENBAUGH
DATE 05 DEC. 2009

AFGHAN NATIONAL SECURITY FORCE
Comprehensive Plan for Facilities Development

MINISTRY OF INTERIOR (MoI) - AFGHAN NATIONAL POLICE
PROVINCIAL FIRE STATION TYPE-B

Section A

SCALE AS SHOWN

PROJECT NO. –

A_S 101

N:\AKP FIRE STATIONS\~9929INITIAL_FSsAA8_091205\FS8_9929INITIAL_Drwgs\ACAD\A_S101-SectionA.dwg 02/14/2010 1:04pm CAD_9

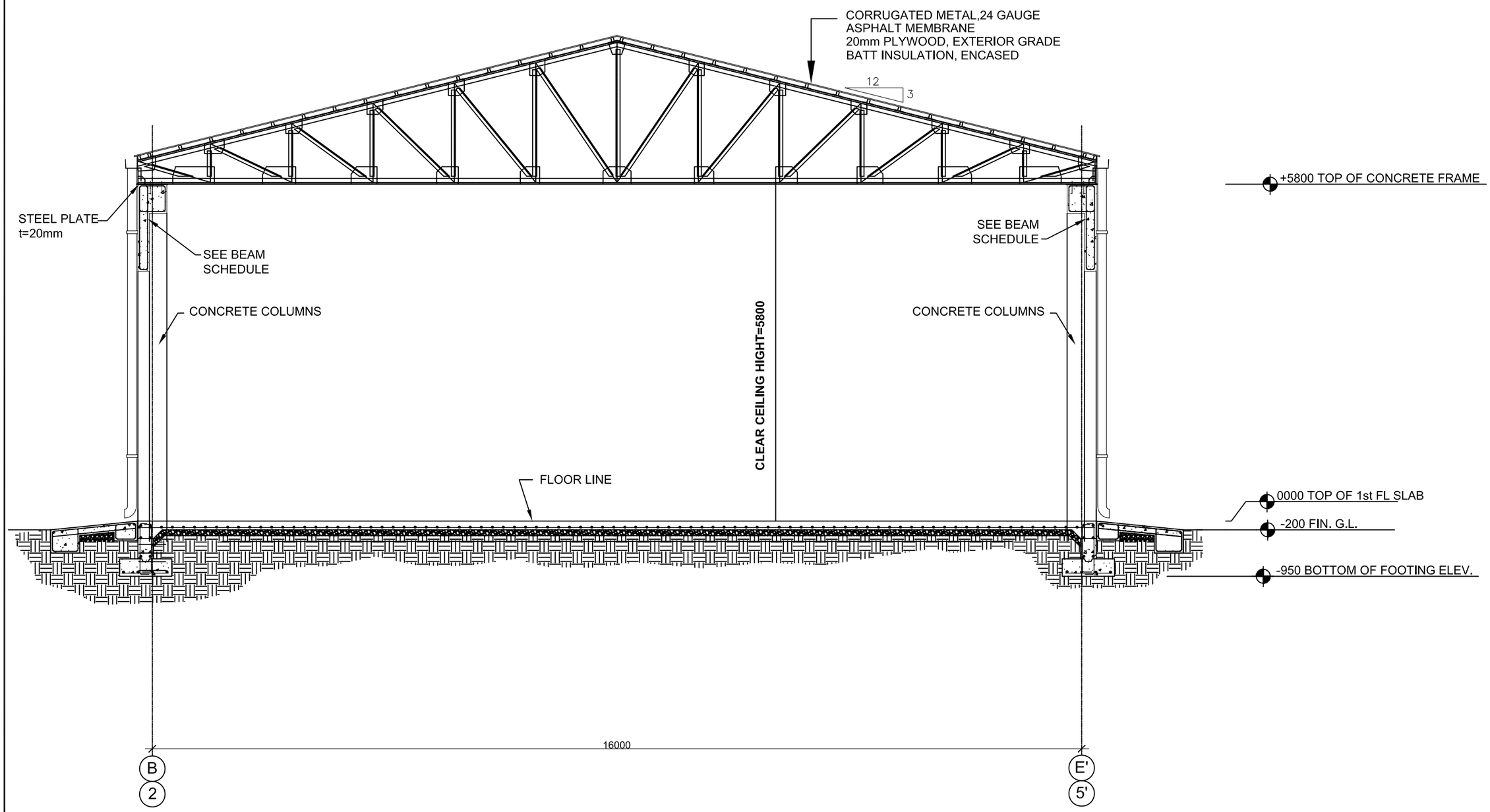

B
A_S102

SECTION – B

A_S100 SCALE: 1:100

PRELIMINARY - NOT FOR CONSTRUCTION

REV	DATE	BY	SUB	APP	DESCRIPTION

DESIGNED V. STEGMEIR
DRAWN M. LORENZ
CHECKED F. HAMMERS
IN CHARGE G. LUCKENBAUGH
DATE 05 DEC 2009

AFGHAN NATIONAL SECURITY FORCE
Comprehensive Plan for Facilities Development
MINISTRY OF INTERIOR (MoI) - AFGHAN NATIONAL POLICE
PROVINCIAL FIRE STATION TYPE-B
Section B

SCALE
AS SHOWN

PROJECT NO.
–

A_S102

N:\ANP FIRE STATIONS\~8928INTIAL_FS\AAB_091205\FS8_8928INTIAL_Dwgs\ACAD\A_S102 Section B.dwg 01/31/2010 10:06am CAD_9

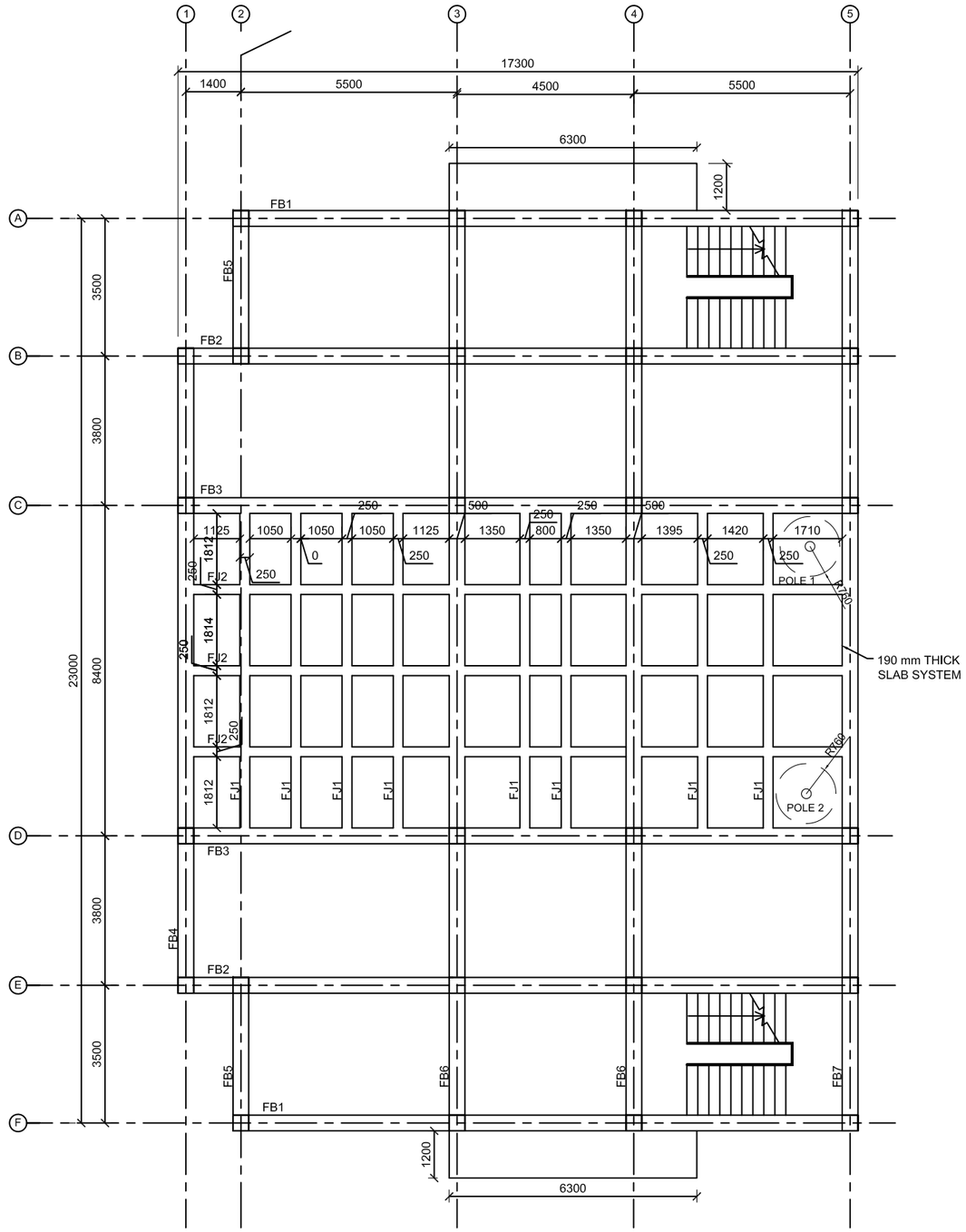

NOTES:

1. FINISHED FLOOR ELEVATION SHALL BE AT 3.3m ABOVE DATUM 0+00.
2. REFER TO BEAM & COLUMN SCHEDULES FOR BEAM, JOIST & COLUMN SIZES & REINFORCING.
3. CONTRACTOR SHALL COORDINATE ALL SLAB OPENING & FLOOR DRAINS WITH ARCHITECTURAL, MECHANICAL & ELECTRICAL DISCIPLINES.

1 | SECOND FLOOR FRAMING PLAN

A_S103 SCALE: 1:70

0.7M 0 4.2M

SCALE 1:70

PRELIMINARY - NOT FOR CONSTRUCTION

REV	DATE	BY	SUB/APP	DESCRIPTION

DESIGNED V. STEGMEIR
DRAWN M. LORENZ
CHECKED F. HAMMERS
IN CHARGE G. LUCKENBAUGH
DATE 05 DEC 2009

AFGHAN NATIONAL SECURITY FORCE
Comprehensive Plan for Facilities Development

MINISTRY OF INTERIOR (MoI) - AFGHAN NATIONAL POLICE
PROVINCIAL FIRE STATION TYPE-B

SECOND FLOOR FRAMING PLAN

SCALE AS SHOWN

PROJECT NO. –

A_S 103

N:\ANP FIRE STATIONS\~99%INITIAL_FSs&MB_091205\YSB_99%INITIAL_Drwgs\ACAD\A_S103 Second Floor Framing Plan.dwg 01/31/2010 10:10am CAD_9

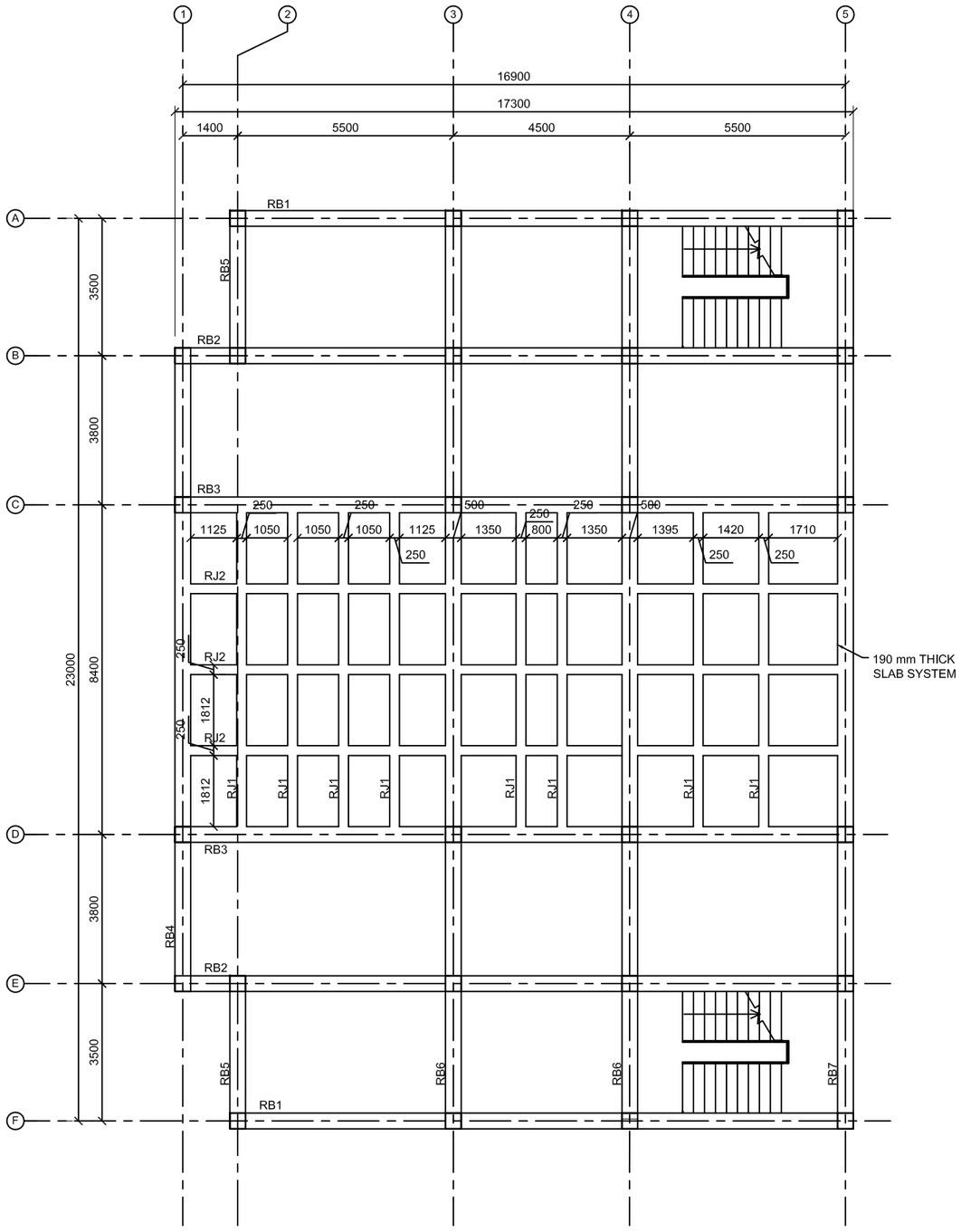

1 ROOF FRAMING PLAN

A_S104 SCALE: 1:70

0.7M 0 4.2M

SCALE 1:70

NOTES:

1. FINISHED ROOF SLAB ELEVATION SHALL BE AT 6.6m ABOVE DATUM 0+00.
2. FINISHED STAIR TOWER ROOF SLAB SHALL BE LOCATED AT +9.15m ABOVE DATUM 0+00.
3. CONTRACTOR SHALL COORDINATE ALL SLAB CONTRACTIONNS, OPENINGS & ETC. WITH ARCHITECTURAL& MEP DISCIPLINES.

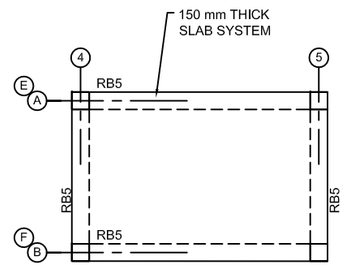

2 STAIR TOWER FRAMING PLAN

A_S104

PRELIMINARY - NOT FOR CONSTRUCTION

REV	DATE	BY	SUB	APP	DESCRIPTION

DESIGNED V. STEGMEIR
DRAWN M. LORENZ
CHECKED F. HAMMERS
IN CHARGE G. LUCKENBAUGH
DATE 05 DEC 2009

AFGHAN NATIONAL SECURITY FORCE
Comprehensive Plan for Facilities Development

MOI FIRE STATION TYPE-B

ROOF FRAMING PLAN

SCALE AS SHOWN

PROJECT NO. –

A_S 104

N:\ANP FIRE STATIONS\~0929INITIAL_FSs\ABB_091205\FSB_0929INITIAL_Dwgs\ACAD\A_S104 Roof Framing Plan.dwg 01/31/2010 10:12am CAD_9

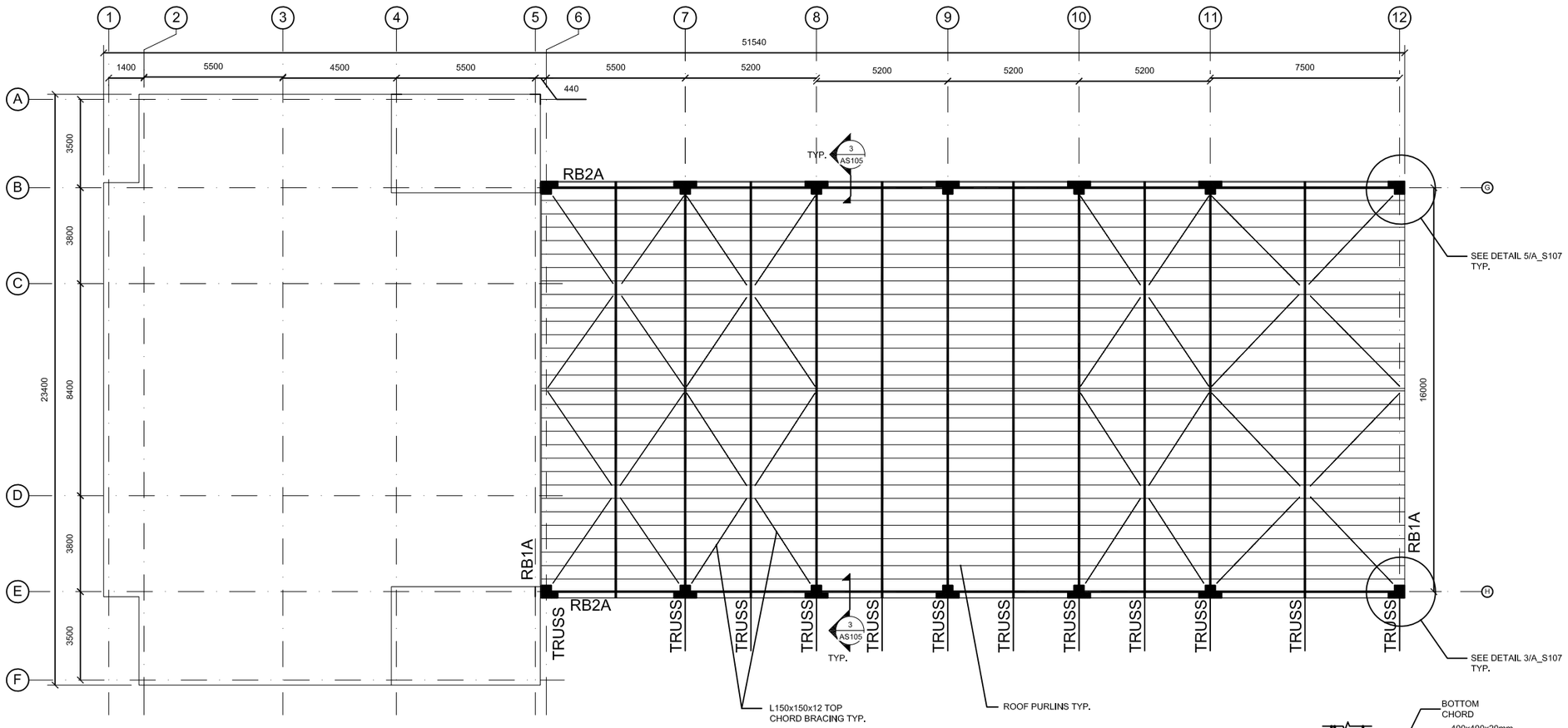

1 ROOF FRAMING PLAN

A_S105 SCALE: 1:100

1M 0 5M

SCALE 1:100

NOTES:

1. TRUSS FABRICATOR SHALL DESIGN TOP & BOTTOM CHORD CONNECTIONS TO RESIST AN ALLOWABLE LOAD OF 445 kN (T/C)
2. ROOF PURLINS SHALL BE HSS 127x76x4.8 @ 550 O.C.
3. PROVIDE BOTTOM CHORD BRACING AT 3RD POINTS, L125x125x10, TYP.

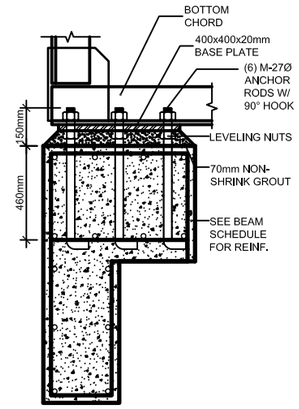

3 DETAIL

A_S105 SCALE: 1:10

PRELIMINARY - NOT FOR CONSTRUCTION

REV	DATE	BY	SUB	APP	DESCRIPTION

DESIGNED V. STEGMEIR
DRAWN M. LORENZ
CHECKED F. HAMMERS
IN CHARGE G. LUCKENBAUGH
DATE 05 DEC 2009

AFGHAN NATIONAL SECURITY FORCE
Comprehensive Plan for Facilities Development
MINISTRY OF INTERIOR (MoI) - AFGHAN NATIONAL POLICE
PROVINCIAL FIRE STATION TYPE-B

ROOF PLAN

SCALE AS SHOWN

PROJECT NO. –

A_S 105

N:\ANP FIRE STATIONS\~99RENTIAL_FSs\ABB_091205\FSB_99RENTIAL_Dwgs\ACAD\A_S105 Roof plan.dwg 01/21/2010 10:15am CAD_9

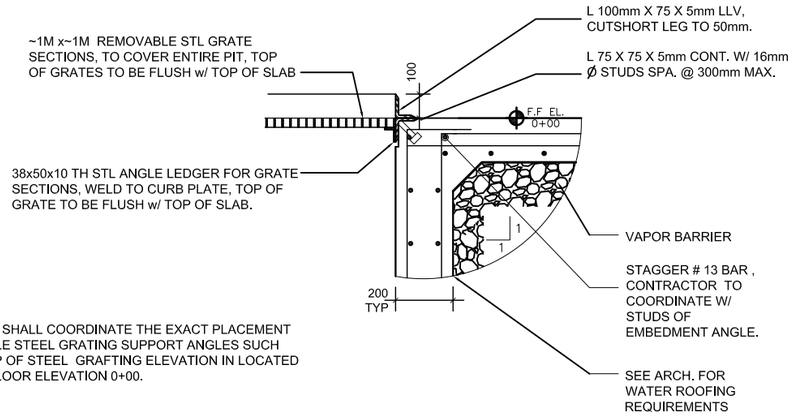

NOTES:

1. CONTRACTOR SHALL COORDINATE THE EXACT PLACEMENT OF REMOVABLE STEEL GRATING SUPPORT ANGLES SUCH THAT THE TOP OF STEEL GRAFTING ELEVATION IN LOCATED AT THE FIN. FLOOR ELEVATION 0+00.

3 / AS106 ENLARGED CURB DETAIL

Scale: 1:100

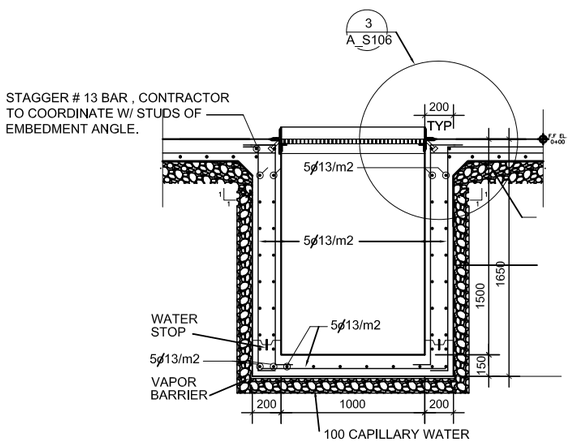

2 / AS100 AS106 TRANSVERSE SECTION AT PIT

Scale: 1:100

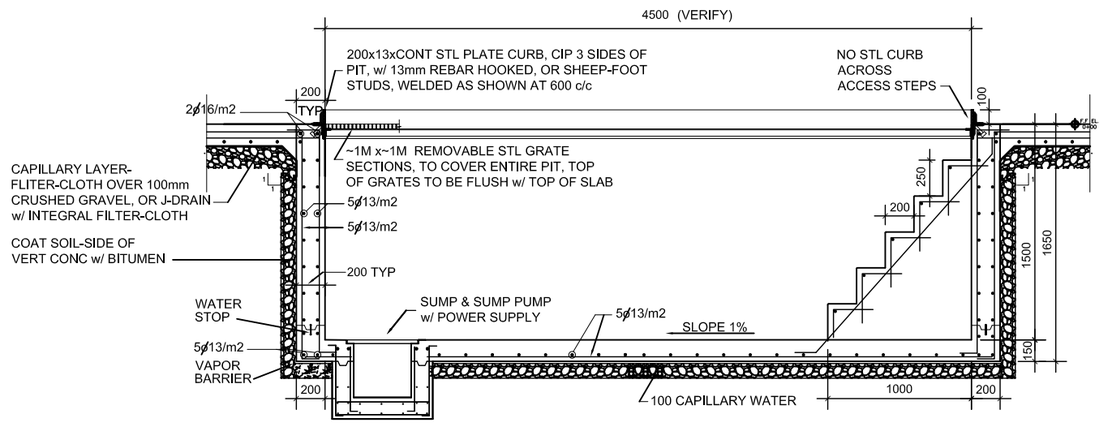

1 / AS100 AS106 LONGITUDINAL SECTION AT PIT

Scale: 1:100

PRELIMINARY - NOT FOR CONSTRUCTION

REV	DATE	BY	SUB	APP	DESCRIPTION

DESIGNED V. STEGMEIR
DRAWN M. LORENZ
CHECKED F. HAMMERS
IN CHARGE G. LUCKENBAUGH
DATE 05 DEC 2009

AFGHAN NATIONAL SECURITY FORCE
Comprehensive Plan for Facilities Development

MINISTRY OF INTERIOR (MoI) - AFGHAN NATIONAL POLICE
PROVINCIAL FIRE STATION TYPE-B

VEHICLE SERVICE PIT DETAILS

SCALE AS SHOWN

PROJECT NO. –

A_S106

N:\ANP FIRE STATIONS\~99290NTIAL_FSsAAB_091205\FSB_99290NTIAL_Drwgs\nCAD\A_S106 Vehicle Service pit.dwg 01/31/2010 9:39am CAD_9

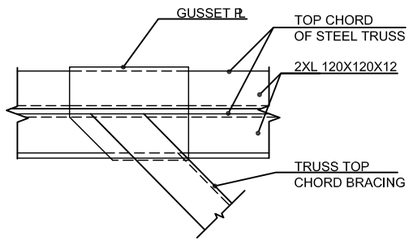

NOTES:
1. GUSSET PL SHALL ENGAGE BOTH ANGLES OF THE TRUSS CHORD

2. FABRICATOR SHALL DESIGN CONNECTION FOR AN ALLOWABLE LOAD OF 45KN (T/C)

03 | TOP CHORD BRACING DETAIL
A_S107 Truss Details SCALE 1:5

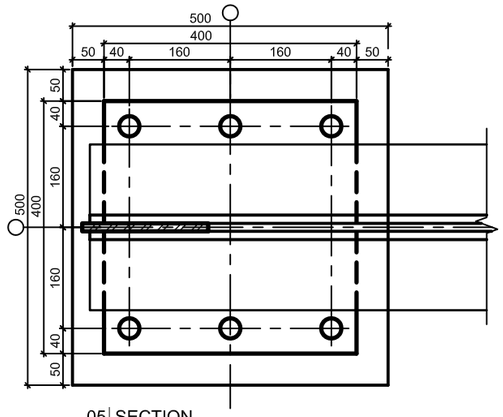

05 | SECTION
A_S107 Truss Details SCALE 1:5

NOTES:
1. TRUSS MANUFACTURER SHALL PROVIDE CONNECTION DESIGNS FOR ALL STEEL TRUSS COMPONENTS. CONNECTION DESIGN SHALL BE SEALED BY A LICENSED PROFESSIONAL ENGINEER AND SUBMITTED FOR APPROVAL WITH SHOP DRAWINGS.
2. ALL DESIGN LOADS SHOWN ARE ALLOWABLE STRENGTH DESIGN (ASD) LOADS DETERMINED IN ACCORDANCE WITH AISC STEEL CONSTRUCTION MANUAL, 13TH EDITION, IBC 2006 & ASCE 7-05.
3. ALL STEEL ANGLES AND CONNECTION PLATES SHALL BE ASTM A36 OR APPROVED EQUIVALENT.
4. ALL WELDING ELECTRODES SHALL BE E70xx ELECTRODES.
5. ANCHOR BOLTS SHALL BE M-27Ø EMBEDDED 310mm. ALL ANCHOR BOLTS SHALL BE EQUIPPED W/ END NUTS, LEVELING NUTS, AND FASTENING NUTS.

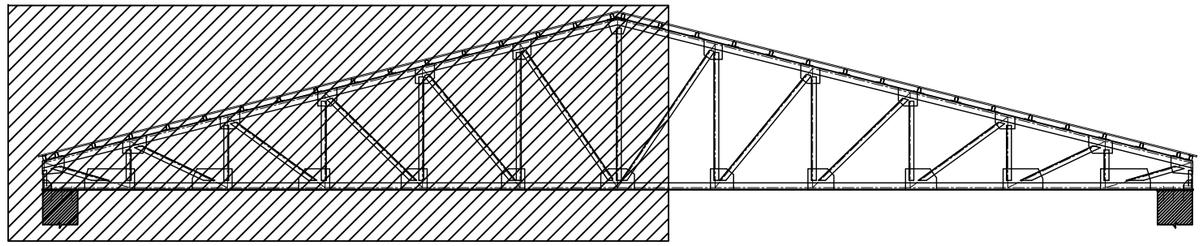

TRUSS

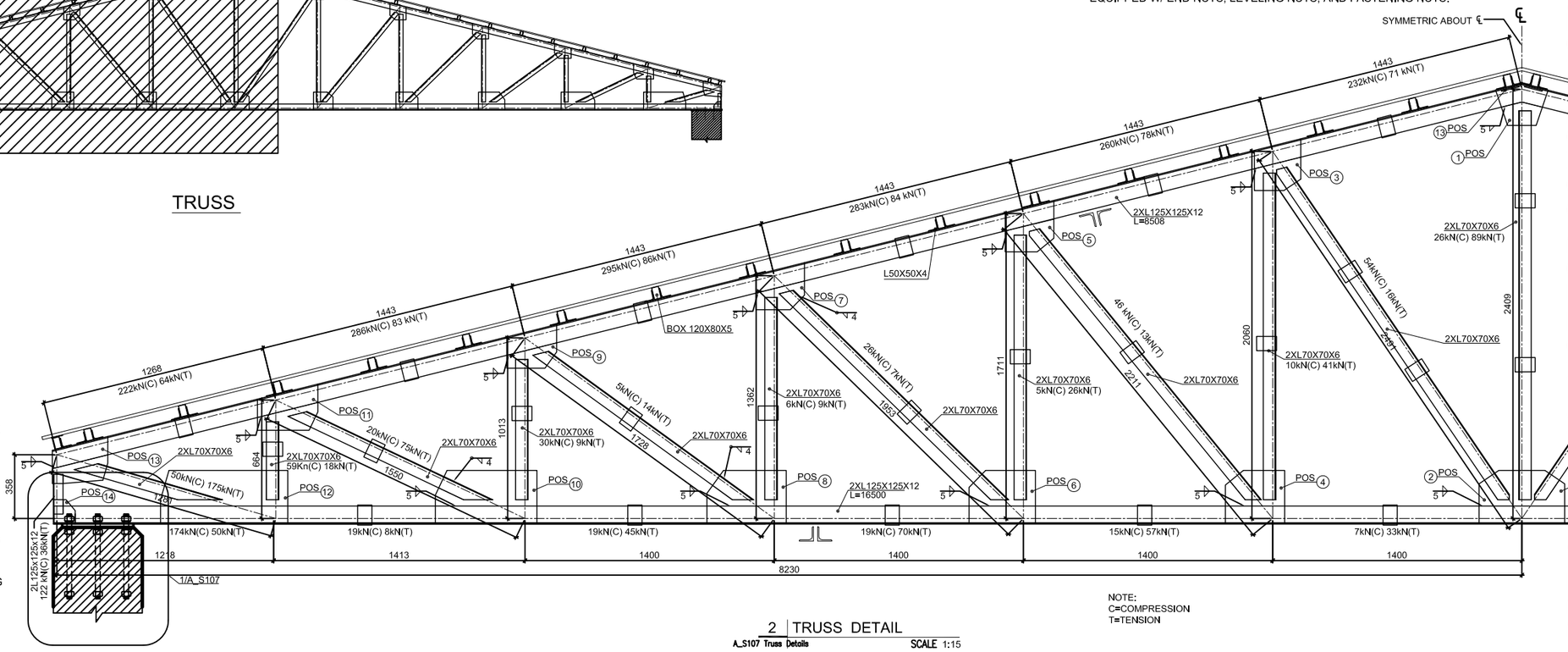

NOTE:
C=COMPRESSION
T=TENSION

2 | TRUSS DETAIL
A_S107 Truss Details SCALE 1:15

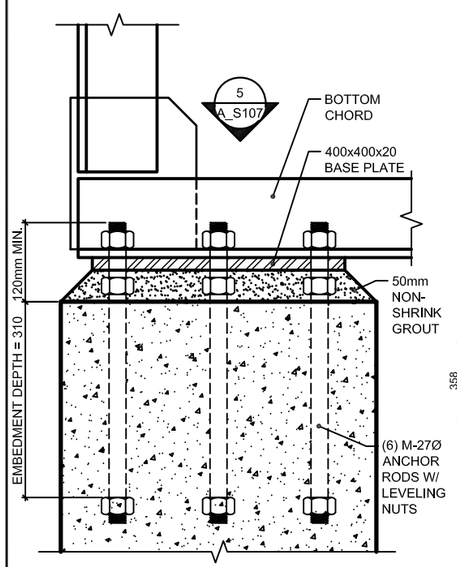

01 | DETAIL -1
A_S107 Truss Details SCALE 1:5

PRELIMINARY - NOT FOR CONSTRUCTION

REV	DATE	BY	SUB	APP	DESCRIPTION

DESIGNED V. STEGMEIR
DRAWN M. LORENZ
CHECKED F. HAMMERS
IN CHARGE G. LUCKENBAUGH
DATE 05 DEC. 2009

AFGHAN NATIONAL SECURITY FORCE
Comprehensive Plan for Facilities Development
MINISTRY OF INTERIOR (MoI) - AFGHAN NATIONAL POLICE
PROVINCIAL FIRE STATION TYPE-B
TRUSS DETAILS

SCALE AS SHOWN
PROJECT NO. –
A_S107

N:\ANP FIRE STATIONS\~9928INTIAL_FSs\AAB_091205\FSB_9928INTIAL_D\regin\CAD\A_S107 Truss Details.dwg 02/14/2010 1:07pm CAD_9

CF1

4000x4000x500

(13)#22 E.W.,
T&B EQ. SPA

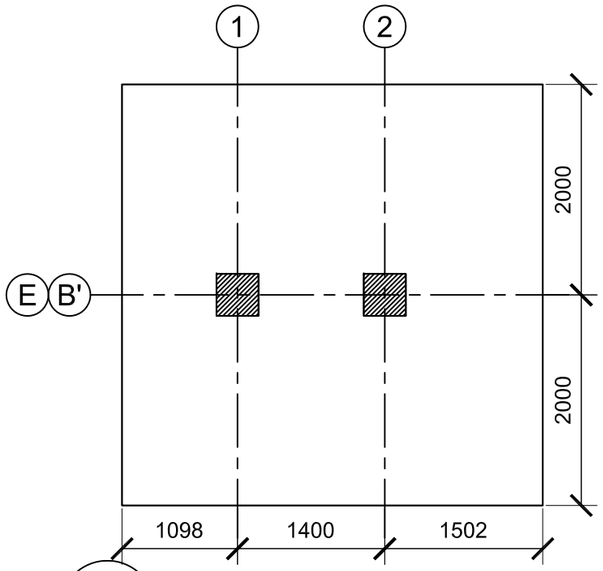

1 COMBINED FOOTING CF1

A_S108 | A_S100

SCALE 1:30

CF3

3820x3820x460

(13)#22 E.W.,
T&B EQ. SPA.

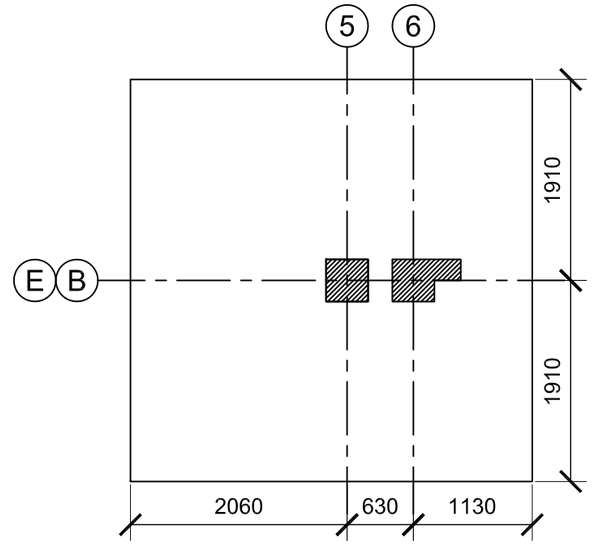

3 COMBINED FOOTING CF3

A_S108 | A_S100

SCALE 1:30

CF2

12200x3660x780

#22'S @ 250
MAX E.W., T&B

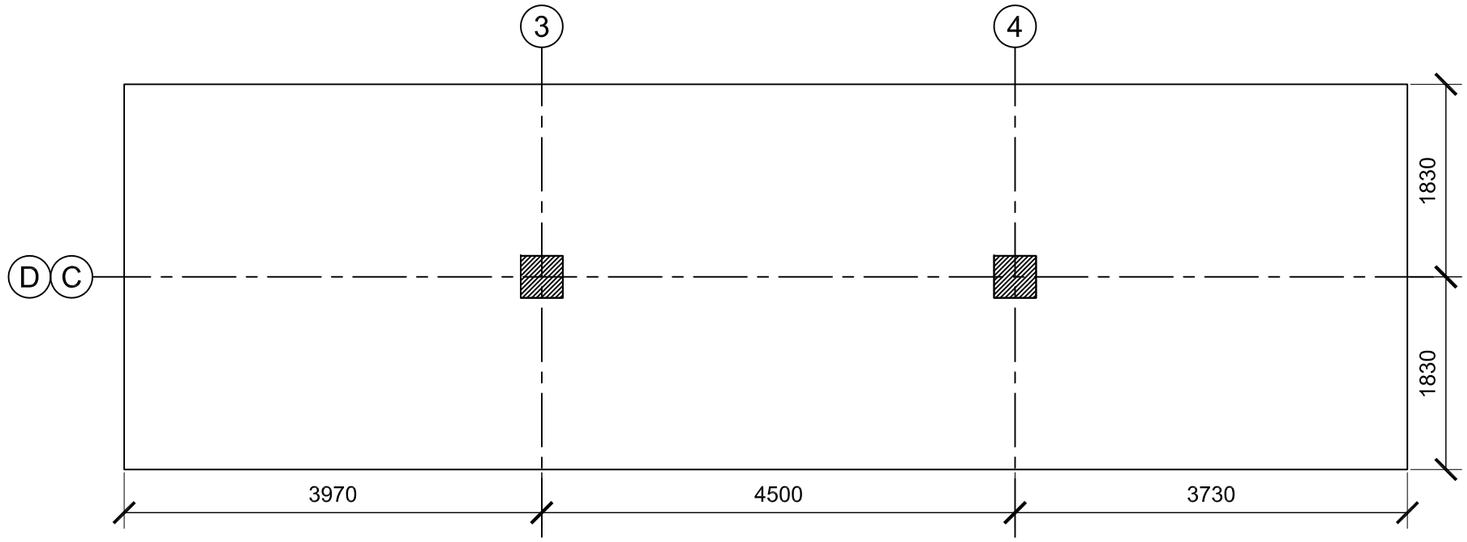

2 COMBINED FOOTING CF2

A_S108 | A_S100

SCALE 1:30

PRELIMINARY - NOT FOR CONSTRUCTION

AFGHAN NATIONAL SECURITY FORCE
Comprehensive Plan for Facilities Development

MINISTRY OF INTERIOR (MoI) - AFGHAN NATIONAL POLICE
PROVINCIAL FIRE STATION TYPE-B

COMBINED FOOTING DIMENSIONS
& REINFORCING

DESIGNED V. STEGMEIR
DRAWN M. LORENZ
CHECKED F. HAMMERS
IN CHARGE G. LUCKENBAUGH
DATE 05 DEC. 2009

REV DATE BY SUB APP DESCRIPTION

SCALE AS SHOWN

PROJECT NO. –

A_S108

N:\ANP FIRE STATIONS\~9928INITIAL_FS\AAB_091205\F3B_9928INITIAL_Dwgs\ACAD\A_S108 CombinationFootings.dwg 02/14/2010 1:08pm CAD_9

CONCRETE f'_c (MPa)	See sheet C_S104										
STEEL f_y (MPa)	See sheet C_S104										
MARK	WIDTH (B) (mm)	DEPTH (h) (mm)	SPAN	LONGITUDINAL BARS (mm)				TRANSVERSE BARS			COMMENTS
				TYPE	SIZE	QTY	SPLICE LENGTH	SIZE	SPACING (QTY@mm)	REMARKS	LONGITUDINAL BARS TO EXTEND CONTINUOUSLY THROUGH SPAN
FB1	500	500		TOP	25	3	See sheet C_S104				DIMENSIONS ARE VALID FOR THE FOLLOWING COLUMN LINES
				BOTTOM	22	3	See sheet C_S104				A, C, D, F, 1, 3, 5, 6
			COLUMN LINES A, C, D & F:					13	1@50	HOOP	EACH END OF SPAN
			FROM COLUMN 1 TO COLUMN 2					13	10@100	HOOP	EACH END OF SPAN
			COLUMN LINES 1, 3, 5 & 6:					13	BALANCE@180	STIRRUP	
			FROM COLUMN A TO COLUMN B								
			COLUMN LINES A, C, D & F:					13	1@50	HOOP	EACH END OF SPAN
			FROM COLUMN 2 TO COLUMN 3					13	10@100	HOOP	EACH END OF SPAN
			COLUMN LINES 1, 3, 5 & 6:					13	5@210	STIRRUP	EACH END OF SPAN
			FROM COLUMN B TO COLUMN C					13	BALANCE@130	HOOP IN SPLICE	
			COLUMN LINES A, C, D & F:					13	1@50	HOOP	EACH END OF SPAN
			FROM COLUMN 3 TO COLUMN 4					13	10@100	HOOP	EACH END OF SPAN
			COLUMN LINES 1, 3, 5 & 6:					13	BALANCE@200	STIRRUP	
			FROM COLUMN C TO COLUMN D								
			COLUMN LINES A, C, D & F:					13	1@50	HOOP	EACH END OF SPAN
			FROM COLUMN 4 TO COLUMN 5					13	10@100	HOOP	EACH END OF SPAN
			COLUMN LINES 1, 3, 5 & 6:					13	BALANCE@130	HOOP IN SPLICE	
			FROM COLUMN D TO COLUMN E								
			COLUMN LINES A, C, D & F:					13	1@50	HOOP	EACH END OF SPAN
			FROM COLUMN 5 TO COLUMN 6					13	10@100	HOOP	EACH END OF SPAN
			COLUMN LINES 1, 3, 5 & 6:					13	BALANCE@200	STIRRUP	
			FROM COLUMN E TO COLUMN F								
FB2	500	500		TOP	29	3	See sheet C_S104				DIMENSIONS ARE VALID FOR THE FOLLOWING COLUMN LINES
				BOTTOM	22	3	See sheet C_S104				B AND 2
			COLUMN LINE B:					13	1@50	HOOP	EACH END OF SPAN
			FROM COLUMN 1 TO COLUMN 3					13	10@100	HOOP	EACH END OF SPAN
			COLUMN LINE 2:					13	13@210	STIRRUP	EACH END OF SPAN
			FROM COLUMN A TO COLUMN C					13	BALANCE@120	HOOP IN SPLICE	
			COLUMN LINE B:					13	1@50	HOOP	EACH END OF SPAN
			FROM COLUMN 3 TO COLUMN 4					13	10@100	HOOP	EACH END OF SPAN
			COLUMN LINE 2:					13	BALANCE@200	STIRRUP	
			FROM COLUMN C TO COLUMN D								
			COLUMN LINE B:					13	1@50	HOOP	EACH END OF SPAN
			FROM COLUMN 4 TO COLUMN 5					13	10@100	HOOP	EACH END OF SPAN
			COLUMN LINE 2:					13	BALANCE@120	HOOP IN SPLICE	
			FROM COLUMN D TO COLUMN E								
			COLUMN LINE B:					13	1@50	HOOP	EACH END OF SPAN
			FROM COLUMN 5 TO COLUMN 6					13	10@100	HOOP	EACH END OF SPAN
			COLUMN LINE 2:					13	BALANCE@200	STIRRUP	
			FROM COLUMN E TO COLUMN F								
FB3	500	500		TOP	29	3	See sheet C_S104				DIMENSIONS ARE VALID FOR COLUMN LINE "E"
				BOTTOM	22	3	See sheet C_S104				
			FROM COLUMN 1 TO COLUMN 2					13	1@50	HOOP	EACH END OF SPAN
								13	10@100	HOOP	EACH END OF SPAN
								13	BALANCE@180	STIRRUP	
			FROM COLUMN 2 TO COLUMN 3					13	1@50	HOOP	EACH END OF SPAN
								13	10@100	HOOP	EACH END OF SPAN
								13	5@200	STIRRUP	EACH END OF SPAN
								13	BALANCE@120	HOOP IN SPLICE	
			FROM COLUMN 3 TO COLUMN 4					13	1@50	HOOP	EACH END OF SPAN
								13	10@100	HOOP	EACH END OF SPAN
								13	BALANCE@200	STIRRUP	
			FROM COLUMN 4 TO COLUMN 5					13	1@50	HOOP	EACH END OF SPAN
								13	10@100	HOOP	EACH END OF SPAN
								13	BALANCE@120	HOOP IN SPLICE	
			FROM COLUMN 5 TO COLUMN 6					13	1@50	HOOP	EACH END OF SPAN
								13	10@100	HOOP	EACH END OF SPAN
								13	BALANCE@200	STIRRUP	
FB4	500	500		TOP	22	3	See sheet C_S104				DIMENSIONS ARE VALID FOR COLUMN LINE "4"
				BOTTOM	22	3	See sheet C_S104				
			FROM COLUMN A TO COLUMN B					13	1@50	HOOP	EACH END OF SPAN
								13	10@100	HOOP	EACH END OF SPAN
								13	BALANCE@180	STIRRUP	
			FROM COLUMN B TO COLUMN C					13	1@50	HOOP	EACH END OF SPAN
								13	10@100	HOOP	EACH END OF SPAN
								13	8@130	STIRRUP	EACH END OF SPAN
								13	BALANCE@100	HOOP IN SPLICE	
			FROM COLUMN C TO COLUMN D					13	1@50	HOOP	EACH END OF SPAN
								13	10@100	HOOP	EACH END OF SPAN
								13	BALANCE@200	STIRRUP	
			FROM COLUMN D TO COLUMN E					13	1@50	HOOP	EACH END OF SPAN
								13	10@100	HOOP	EACH END OF SPAN
								13	BALANCE@100	HOOP IN SPLICE	
			FROM COLUMN E TO COLUMN F					13	1@50	HOOP	EACH END OF SPAN
								13	10@100	HOOP	EACH END OF SPAN
								13	BALANCE@200	STIRRUP	
RB1	500	500		Top	19	3	See sheet C_S104				DIMENSIONS ARE VALID FOR THE FOLLOWING COLUMN LINES
				Bottom	19	3	See sheet C_S104				A, C, D, F, 1, 3, 4, 5, 6
			COLUMN LINES A, C, D & F:					13	1@50	HOOP	EACH END OF SPAN
			FROM COLUMN 1 TO COLUMN 2					13	10@100	HOOP	EACH END OF SPAN
			COLUMN LINES 1, 3, 5 & 6:					13	BALANCE@180	STIRRUP	
			FROM COLUMN A TO COLUMN B								
			COLUMN LINES A, C, D & F:					13	1@50	HOOP	EACH END OF SPAN
			FROM COLUMN 2 TO COLUMN 3					13	10@100	HOOP	EACH END OF SPAN
			COLUMN LINES 1, 3, 5 & 6:					13	5@210	STIRRUP	EACH END OF SPAN
			FROM COLUMN B TO COLUMN C					13	BALANCE@130	HOOP IN SPLICE	
			COLUMN LINES A, C, D & F:					13	1@50	HOOP	EACH END OF SPAN
			FROM COLUMN 3 TO COLUMN 4					13	10@100	HOOP	EACH END OF SPAN
			COLUMN LINES 1, 3, 5 & 6:					13	BALANCE@200	STIRRUP	
			FROM COLUMN C TO COLUMN D								
			COLUMN LINES A, C, D & F:					13	1@50	HOOP	EACH END OF SPAN
			FROM COLUMN 4 TO COLUMN 5					13	10@100	HOOP	EACH END OF SPAN
			COLUMN LINES 1, 3, 5 & 6:					13	BALANCE@130	HOOP IN SPLICE	
			FROM COLUMN D TO COLUMN E								
			COLUMN LINES A, C, D & F:					13	1@50	HOOP	EACH END OF SPAN
			FROM COLUMN 5 TO COLUMN 6					13	10@100	HOOP	EACH END OF SPAN
			COLUMN LINES 1, 3, 5 & 6:					13	BALANCE@200	STIRRUP	
			FROM COLUMN E TO COLUMN F								
RB2	500	500		Top	25	3	See sheet C_S104				DIMENSIONS ARE VALID FOR THE FOLLOWING COLUMN LINES
				Bottom	19	3	See sheet C_S104				B AND 2
			COLUMN LINE B:					13	1@50	HOOP	EACH END OF SPAN
			FROM COLUMN 1 TO COLUMN 3					13	10@100	HOOP	EACH END OF SPAN
			COLUMN LINE 2:					13	13@210	STIRRUP	EACH END OF SPAN
			FROM COLUMN A TO COLUMN C					13	BALANCE@120	HOOP IN SPLICE	
			COLUMN LINE B:					13	1@50	HOOP	EACH END OF SPAN
			FROM COLUMN 3 TO COLUMN 4					13	10@100	HOOP	EACH END OF SPAN
			COLUMN LINE 2:					13	BALANCE@200	STIRRUP	
			FROM COLUMN C TO COLUMN D								
			COLUMN LINE B:					13	1@50	HOOP	EACH END OF SPAN
			FROM COLUMN 4 TO COLUMN 5					13	10@100	HOOP	EACH END OF SPAN
			COLUMN LINE 2:					13	BALANCE@120	HOOP IN SPLICE	
			FROM COLUMN D TO COLUMN E								
			COLUMN LINE B:					13	1@50	HOOP	EACH END OF SPAN
			FROM COLUMN 5 TO COLUMN 6					13	10@100	HOOP	EACH END OF SPAN
			COLUMN LINE 2:					13	BALANCE@200	STIRRUP	
			FROM COLUMN E TO COLUMN F								
RB3	500	500		Top	22	3	See sheet C_S104				DIMENSIONS ARE VALID FOR COLUMN LINE "E"
				Bottom	19	3	See sheet C_S104				
			FROM COLUMN 1 TO COLUMN 2					13	1@50	HOOP	EACH END OF SPAN
								13	10@100	HOOP	EACH END OF SPAN
								13	BALANCE@180	STIRRUP	
			FROM COLUMN 2 TO COLUMN 3					13	1@50	HOOP	EACH END OF SPAN
								13	10@100	HOOP	EACH END OF SPAN
								13	5@200	STIRRUP	EACH END OF SPAN
								13	BALANCE@120	HOOP IN SPLICE	
			FROM COLUMN 3 TO COLUMN 4					13	1@50	HOOP	EACH END OF SPAN
								13	10@100	HOOP	EACH END OF SPAN
								13	BALANCE@200	STIRRUP	
			FROM COLUMN 4 TO COLUMN 5					13	1@50	HOOP	EACH END OF SPAN
								13	10@100	HOOP	EACH END OF SPAN
								13	BALANCE@120	HOOP IN SPLICE	
			FROM COLUMN 5 TO COLUMN 6					13	1@50	HOOP	EACH END OF SPAN
								13	10@100	HOOP	EACH END OF SPAN
								13	BALANCE@200	STIRRUP	
RB4	500	500		Top	22	3	See sheet C_S104				DIMENSIONS ARE VALID FOR THE FOLLOWING SPANS
				Bottom	19	3	See sheet C_S104				A5–A6, B5–B6, E1–F1, E2–F2
			NOTED					13	1@50	HOOP	EACH END OF SPAN
								13	10@100	HOOP	EACH END OF SPAN
								13	BALANCE@200	STIRRUP	
RB5	500	500		Top	22	3	See sheet C_S104				DIMENSIONS ARE VALID FOR THE FOLLOWING SPANS
				Bottom	19	3	See sheet C_S104				A5–B5, A6–B6, E1–E2, F1–F2
			NOTED					13	1@50	HOOP	EACH END OF SPAN
								13	10@100	HOOP	EACH END OF SPAN
								13	BALANCE@180	STIRRUP	

6 BEAM SCHEDULE
A_S111

CONCRETE f'_c (MPa)	See sheet C_S104										
STEEL f_y (MPa)	See sheet C_S104										
MARK	WIDTH (B) (mm)	DEPTH (h) (mm)	SPAN	LONGITUDINAL BARS (mm)				TRANSVERSE BARS			COMMENTS
				TYPE	SIZE	QTY	SPLICE LENGTH	SIZE	SPACING (QTY@mm)	REMARKS	LONGITUDINAL BARS TO EXTEND CONTINUOUSLY THROUGH SPAN
FJ1	250	500		TOP	16	3	See sheet C_S104				DIMENSIONS ARE VALID FOR THE FOLLOWING COLUMN LINES
				BOTTOM	16	3	See sheet C_S104				E.3 & E.7
			COLUMN E.3/2 TO E.3/2.6					10	1@50	STIRRUP	EACH END OF SPAN
								10	10@100	STIRRUP	EACH END OF SPAN
								10	BALANCE@200	STIRRUP	
			COLUMN E.3/2.6 TO E.3/2.7					10	1@50	STIRRUP	EACH END OF SPAN
								10	BALANCE@100	STIRRUP	EACH END OF SPAN
			COLUMNE.3/2.7 TO E.3/3					10	1@50	STIRRUP	EACH END OF SPAN
								10	10@100	STIRRUP	EACH END OF SPAN
								10	BALANCE@200	STIRRUP	
FJ2	250	500		TOP	16	3	See sheet C_S104				DIMENSIONS ARE VALID FOR THE FOLLOWING COLUMN LINES
				BOTTOM	16	3	See sheet C_S104				A.5, B.4, B.7
			COLUMN A.5/1 TO A.5/1.5					10	1@50	STIRRUP	EACH END OF SPAN
			COLUMN B.4/1 TO B.4/1.5					10	10@100	STIRRUP	EACH END OF SPAN
			COLUMN B.7/1 TO B.7/1.5					10	BALANCE@200	STIRRUP	
			COLUMN A.5/1.5 TO A.5/2					10	1@50	STIRRUP	EACH END OF SPAN
			COLUMN B.4/1.5 TO B.4/2					10	10@100	STIRRUP	EACH END OF SPAN
			COLUMN B.7/1.5 TO B.7/2					10	BALANCE@200	STIRRUP	
			COLUMN A.5/2 TO A.5/2.4					10	1@50	STIRRUP	EACH END OF SPAN
			COLUMN B.4/2 TO B.4/2.4					10	10@100	STIRRUP	EACH END OF SPAN
			COLUMN B.7/2 TO B.7/2.4					10	BALANCE@200	STIRRUP	
			COLUMN A.5/2.4 TO A.5/2.7					10	1@50	STIRRUP	EACH END OF SPAN
			COLUMN B.4/2.4 TO B.4/2.7					10	10@100	STIRRUP	EACH END OF SPAN
			COLUMN B.7/2.4 TO B.7/2.7					10	BALANCE@200	STIRRUP	
			COLUMN A.5/2.7 TO A.5/3					10	1@50	STIRRUP	EACH END OF SPAN
			COLUMN B.4/2.7 TO B.4/3					10	10@100	STIRRUP	EACH END OF SPAN
			COLUMN B.7/2.7 TO B.7/2.3					10	BALANCE@200	STIRRUP	
FJ3	250	500		TOP	16	3	See sheet C_S104				DIMENSIONS ARE VALID FOR THE FOLLOWING COLUMN LINES
				BOTTOM	16	3	See sheet C_S104				1.5, 2.4, 2.7
			COLUMN C/1.5 TO B.7/1.5					10	1@50	STIRRUP	EACH END OF SPAN
			COLUMN C/2.5 TO B.7/2.5					10	10@100	STIRRUP	EACH END OF SPAN
			COLUMN C/2.7 TO B.7/2.7					10	BALANCE@200	STIRRUP	
			COLUMN B.7/1.5 TO B.5/1.5					10	1@50	STIRRUP	EACH END OF SPAN
			COLUMN B.7/2.5 TO B.5/2.5					10	10@100	STIRRUP	EACH END OF SPAN
			COLUMN B.7/2.7 TO B.5/2.7					10	BALANCE@200	STIRRUP	
			COLUMN B.4/1.5 TO B/1.5					10	1@50	STIRRUP	EACH END OF SPAN
			COLUMN B.4/2.5 TO B/2.5					10	10@100	STIRRUP	EACH END OF SPAN
			COLUMN B.4/2.7 TO B/2.7					10	BALANCE@200	STIRRUP	
			COLUMN B/1.5 TO A.5/1.5					10	1@50	STIRRUP	EACH END OF SPAN
			COLUMN B/2.5 TO A.5/2.5					10	10@100	STIRRUP	EACH END OF SPAN
			COLUMN B/2.7 TO A.5/2.7					10	BALANCE@200	STIRRUP	
			COLUMN A.5/1.5 TO A/1.5					10	1@50	STIRRUP	EACH END OF SPAN
			COLUMN A.5/2.5 TO A/2.5					10	10@100	STIRRUP	EACH END OF SPAN
			COLUMN A.5/2.7 TO A/2.7					10	BALANCE@200	STIRRUP	
FJ4	250	500		TOP	16	3	See sheet C_S104				DIMENSIONS ARE VALID FOR THE FOLLOWING COLUMN LINES
				BOTTOM	16	3	See sheet C_S104				B.5 & B.7
			COLUMN B.5/5 TO B.5/5.3					10	1@50	STIRRUP	EACH END OF SPAN
			COLUMN B.7/5 TO B.7/5.3					10	10@100	STIRRUP	EACH END OF SPAN
								10	BALANCE@200	STIRRUP	
			COLUMN B.5/5.3 TO B.5/5.7					10	1@50	STIRRUP	EACH END OF SPAN
			COLUMN B.7/5.3 TO B.7/5.7					10	BALANCE@100	STIRRUP	EACH END OF SPAN
			COLUMN B.5/5.7 TO B.55/6					10	1@50	STIRRUP	EACH END OF SPAN
			COLUMN B.7/5.7 TO B.7/6					10	10@100	STIRRUP	EACH END OF SPAN
FJ5	250	500		TOP	16	3	See sheet C_S104				DIMENSIONS ARE VALID FOR THE FOLLOWING COLUMN LINES
				BOTTOM	16	3	See sheet C_S104				5.3 & 5.7
			COLUMN F/5.3 TO E.7/5.3					10	1@50	STIRRUP	EACH END OF SPAN
			COLUMN F/5.7 TO E.7/5.7					10	10@100	STIRRUP	EACH END OF SPAN
								10	BALANCE@200	STIRRUP	
			COLUMN E.7/5.3 TO E.3/5.3					10	1@50	STIRRUP	EACH END OF SPAN
			COLUMN E.7/5.7 TO E.3/5.7					10	10@100	STIRRUP	EACH END OF SPAN
								10	BALANCE@200	STIRRUP	
			COLUMN E.3/5.3 TO E/5.3					10	1@50	STIRRUP	EACH END OF SPAN
			COLUMN E.3/5.7 TO E/5.7					10	10@100	STIRRUP	EACH END OF SPAN
								10	BALANCE@200	STIRRUP	
			COLUMN E/5.3 TO D.3/5.3					10	1@50	STIRRUP	EACH END OF SPAN
			COLUMN E/5.7 TO D.3/5.7					10	10@100	STIRRUP	EACH END OF SPAN
								10	BALANCE@200	STIRRUP	
			COLUMN D.3/5.3 TO D/5.3					10	1@50	STIRRUP	EACH END OF SPAN
			COLUMN D.3/5.7 TO D/5.7					10	10@100	STIRRUP	EACH END OF SPAN
								10	BALANCE@200	STIRRUP	
FJ6	250	500		TOP	16	3	See sheet C_S104				DIMENSIONS ARE VALID FOR THE FOLLOWING COLUMN LINES
				BOTTOM	16	3	See sheet C_S104				5.3 & 5.7
			COLUMN C/5.3 TO B.7/5.3					10	1@50	STIRRUP	EACH END OF SPAN
			COLUMN C/5.7 TO B.7/5.7					10	10@100	STIRRUP	EACH END OF SPAN
								10	BALANCE@200	STIRRUP	
			COLUMN B.7/5.3 TO B.6/5.3					10	1@50	STIRRUP	EACH END OF SPAN
			COLUMN B.7/5.7 TO E.6/5.7					10	BALANCE@100	STIRRUP	EACH END OF SPAN
			COLUMN B.6/5.3 TO B/5.3					10	1@50	STIRRUP	EACH END OF SPAN
			COLUMN B.6/5.7 TO B/5.7					10	10@100	STIRRUP	EACH END OF SPAN
FJ7	250	500		TOP	16	3	See sheet C_S104				DIMENSIONS ARE VALID FOR THE FOLLOWING COLUMN LINES
				BOTTOM	16	3	See sheet C_S104				2.6 & 2.7
			COLUMN F/2.6 TO E.7/2.6					10	1@50	STIRRUP	EACH END OF SPAN
			COLUMN F/2.7 TO E.7/2.7					10	10@100	STIRRUP	EACH END OF SPAN
								10	BALANCE@200	STIRRUP	
			COLUMN E.7/2.6 TO E.3/2.6					10	1@50	STIRRUP	EACH END OF SPAN
			COLUMN E.7/2.7 TO E.3/2.7					10	10@100	STIRRUP	EACH END OF SPAN
								10	BALANCE@200	STIRRUP	
			COLUMN E.3/2.6 TO E/2.6					10	1@50	STIRRUP	EACH END OF SPAN
			COLUMN E.3/2.7 TO E/2.7					10	10@100	STIRRUP	EACH END OF SPAN
RJ1	250	500		TOP	16	3	See sheet C_S104				DIMENSIONS ARE VALID FOR THE FOLLOWING COLUMN LINES
				BOTTOM	16	3	See sheet C_S104				E.3 & E.7
			COLUMN E.3/2 TO E.3/2.6					10	1@50	STIRRUP	EACH END OF SPAN
								10	10@100	STIRRUP	EACH END OF SPAN
								10	BALANCE@200	STIRRUP	
			COLUMN E.3/2.6 TO E.3/2.7					10	1@50	STIRRUP	EACH END OF SPAN
								10	BALANCE@100	STIRRUP	EACH END OF SPAN
			COLUMNE.3/2.7 TO E.3/3					10	1@50	STIRRUP	EACH END OF SPAN
								10	10@100	STIRRUP	EACH END OF SPAN
								10	BALANCE@200	STIRRUP	
RJ2	250	500		TOP	16	3	See sheet C_S104				DIMENSIONS ARE VALID FOR THE FOLLOWING COLUMN LINES
				BOTTOM	16	3	See sheet C_S104				A.5, B.4, B.7
			COLUMN A.5/1 TO A.5/1.5					10	1@50	STIRRUP	EACH END OF SPAN
			COLUMN B.4/1 TO B.4/1.5					10	10@100	STIRRUP	EACH END OF SPAN
			COLUMN B.7/1 TO B.7/1.5					10	BALANCE@200	STIRRUP	
			COLUMN A.5/1.5 TO A.5/2					10	1@50	STIRRUP	EACH END OF SPAN
			COLUMN B.4/1.5 TO B.4/2					10	10@100	STIRRUP	EACH END OF SPAN
			COLUMN B.7/1.5 TO B.7/2					10	BALANCE@200	STIRRUP	
			COLUMN A.5/2 TO A.5/2.4					10	1@50	STIRRUP	EACH END OF SPAN
			COLUMN B.4/2 TO B.4/2.4					10	10@100	STIRRUP	EACH END OF SPAN
			COLUMN B.7/2 TO B.7/2.4					10	BALANCE@200	STIRRUP	
			COLUMN A.5/2.4 TO A.5/2.7					10	1@50	STIRRUP	EACH END OF SPAN
			COLUMN B.4/2.4 TO B.4/2.7					10	10@100	STIRRUP	EACH END OF SPAN
			COLUMN B.7/2.4 TO B.7/2.7					10	BALANCE@200	STIRRUP	
			COLUMN A.5/2.7 TO A.5/3					10	1@50	STIRRUP	EACH END OF SPAN
			COLUMN B.4/2.7 TO B.4/3					10	10@100	STIRRUP	EACH END OF SPAN
			COLUMN B.7/2.7 TO B.7/2.3					10	BALANCE@200	STIRRUP	
RJ3	250	500		TOP	16	3	See sheet C_S104				DIMENSIONS ARE VALID FOR THE FOLLOWING COLUMN LINES
				BOTTOM	16	3	See sheet C_S104				1.5, 2.4, 2.7
			COLUMN C/1.5 TO B.7/1.5					10	1@50	STIRRUP	EACH END OF SPAN
			COLUMN C/2.5 TO B.7/2.5					10	10@100	STIRRUP	EACH END OF SPAN
			COLUMN C/2.7 TO B.7/2.7					10	BALANCE@200	STIRRUP	
			COLUMN B.7/1.5 TO B.5/1.5					10	1@50	STIRRUP	EACH END OF SPAN
			COLUMN B.7/2.5 TO B.5/2.5					10	10@100	STIRRUP	EACH END OF SPAN
			COLUMN B.7/2.7 TO B.5/2.7					10	BALANCE@200	STIRRUP	
			COLUMN B.4/1.5 TO B/1.5					10	1@50	STIRRUP	EACH END OF SPAN
			COLUMN B.4/2.5 TO B/2.5					10	10@100	STIRRUP	EACH END OF SPAN
			COLUMN B.4/2.7 TO B/2.7					10	BALANCE@200	STIRRUP	
			COLUMN B/1.5 TO A.5/1.5					10	1@50	STIRRUP	EACH END OF SPAN
			COLUMN B/2.5 TO A.5/2.5					10	10@100	STIRRUP	EACH END OF SPAN
			COLUMN B/2.7 TO A.5/2.7					10	BALANCE@200	STIRRUP	
			COLUMN A.5/1.5 TO A/1.5					10	1@50	STIRRUP	EACH END OF SPAN
			COLUMN A.5/2.5 TO A/2.5					10	10@100	STIRRUP	EACH END OF SPAN
			COLUMN A.5/2.7 TO A/2.7					10	BALANCE@200	STIRRUP	
RJ4	250	500		TOP	16	3	See sheet C_S104				DIMENSIONS ARE VALID FOR THE FOLLOWING COLUMN LINES
				BOTTOM	16	3	See sheet C_S104				B.5 & B.7
			COLUMN B.5/5 TO B.5/5.3					10	1@50	STIRRUP	EACH END OF SPAN
			COLUMN B.7/5 TO B.7/5.3					10	10@100	STIRRUP	EACH END OF SPAN
								10	BALANCE@200	STIRRUP	
			COLUMN B.5/5.3 TO B.5/5.7					10	1@50	STIRRUP	EACH END OF SPAN
			COLUMN B.7/5.3 TO B.7/5.7					10	BALANCE@100	STIRRUP	EACH END OF SPAN
			COLUMN B.5/5.7 TO B.55/6					10	1@50	STIRRUP	EACH END OF SPAN
			COLUMN B.7/5.7 TO B.7/6					10	10@100	STIRRUP	EACH END OF SPAN
RJ5	250	500		TOP	16	3	See sheet C_S104				DIMENSIONS ARE VALID FOR THE FOLLOWING COLUMN LINES
				BOTTOM	16	3	See sheet C_S104				5.3 & 5.7
			COLUMN F/5.3 TO E.7/5.3					10	1@50	STIRRUP	EACH END OF SPAN
			COLUMN F/5.7 TO E.7/5.7					10	10@100	STIRRUP	EACH END OF SPAN
								10	BALANCE@200	STIRRUP	
			COLUMN E.7/5.3 TO E.3/5.3					10	1@50	STIRRUP	EACH END OF SPAN
			COLUMN E.7/5.7 TO E.3/5.7					10	10@100	STIRRUP	EACH END OF SPAN
								10	BALANCE@200	STIRRUP	
			COLUMN E.3/5.3 TO E/5.3					10	1@50	STIRRUP	EACH END OF SPAN
			COLUMN E.3/5.7 TO E/5.7					10	10@100	STIRRUP	EACH END OF SPAN
								10	BALANCE@200	STIRRUP	
			COLUMN E/5.3 TO D.3/5.3					10	1@50	STIRRUP	EACH END OF SPAN
			COLUMN E/5.7 TO D.3/5.7					10	10@100	STIRRUP	EACH END OF SPAN
								10	BALANCE@200	STIRRUP	
			COLUMN D.3/5.3 TO D/5.3					10	1@50	STIRRUP	EACH END OF SPAN
			COLUMN D.3/5.7 TO D/5.7					10	10@100	STIRRUP	EACH END OF SPAN
								10	BALANCE@200	STIRRUP	
RJ6	250	500		TOP	16	3	See sheet C_S104				DIMENSIONS ARE VALID FOR THE FOLLOWING COLUMN LINES
				BOTTOM	16	3	See sheet C_S104				5.3 & 5.7
			COLUMN C/5.3 TO B.7/5.3					10	1@50	STIRRUP	EACH END OF SPAN
			COLUMN C/5.7 TO B.7/5.7					10	10@100	STIRRUP	EACH END OF SPAN
								10	BALANCE@200	STIRRUP	
			COLUMN B.7/5.3 TO B.6/5.3					10	1@50	STIRRUP	EACH END OF SPAN
			COLUMN B.7/5.7 TO E.6/5.7					10	BALANCE@100	STIRRUP	EACH END OF SPAN
			COLUMN B.6/5.3 TO B/5.3					10	1@50	STIRRUP	EACH END OF SPAN
			COLUMN B.6/5.7 TO B/5.7					10	10@100	STIRRUP	EACH END OF SPAN
RJ7	250	500		TOP	16	3	See sheet C_S104				DIMENSIONS ARE VALID FOR THE FOLLOWING COLUMN LINES
				BOTTOM	16	3	See sheet C_S104				2.6 & 2.7
			COLUMN F/2.6 TO E.7/2.6					10	1@50	STIRRUP	EACH END OF SPAN
			COLUMN F/2.7 TO E.7/2.7					10	10@100	STIRRUP	EACH END OF SPAN
								10	BALANCE@200	STIRRUP	
			COLUMN E.7/2.6 TO E.3/2.6					10	1@50	STIRRUP	EACH END OF SPAN
			COLUMN E.7/2.7 TO E.3/2.7					10	10@100	STIRRUP	EACH END OF SPAN
								10	BALANCE@200	STIRRUP	
			COLUMN E.3/2.6 TO E/2.6					10	1@50	STIRRUP	EACH END OF SPAN
			COLUMN E.3/2.7 TO E/2.7					10	10@100	STIRRUP	EACH END OF SPAN

7 JOIST SCHEDULE
A_S111

PRELIMINARY - NOT FOR CONSTRUCTION

DESCRIPTION | REV | DATE | BY | SUB | APP

DESIGNED V. STEGMEIR
DRAWN M. LORENZ
CHECKED F. HAMMERS
IN CHARGE G. LUCKENBAUGH
DATE 5 DEC 2009

AFGHAN NATIONAL SECURITY FORCE
Comprehensive Plan for Facilities Development

MINISTRY OF INTERIOR (MoI) - AFGHAN NATIONAL POLICE
PROVINCIAL FIRE STATION TYPE-A

CONCRETE BEAM AND JOIST
REINFORCEMENT SCHEDULE

SCALE AS SHOWN

PROJECT NO. –

A_S111.2

N:\ANP FIRE STATIONS\~99%INITIAL_FSsA&B_091205\FSA_99%INITIAL_DrwgsInACAD\A_S111--Conc.Beam & Joist Rienf. Schedule.dwg 12/12/2009 10:56am CAD_9

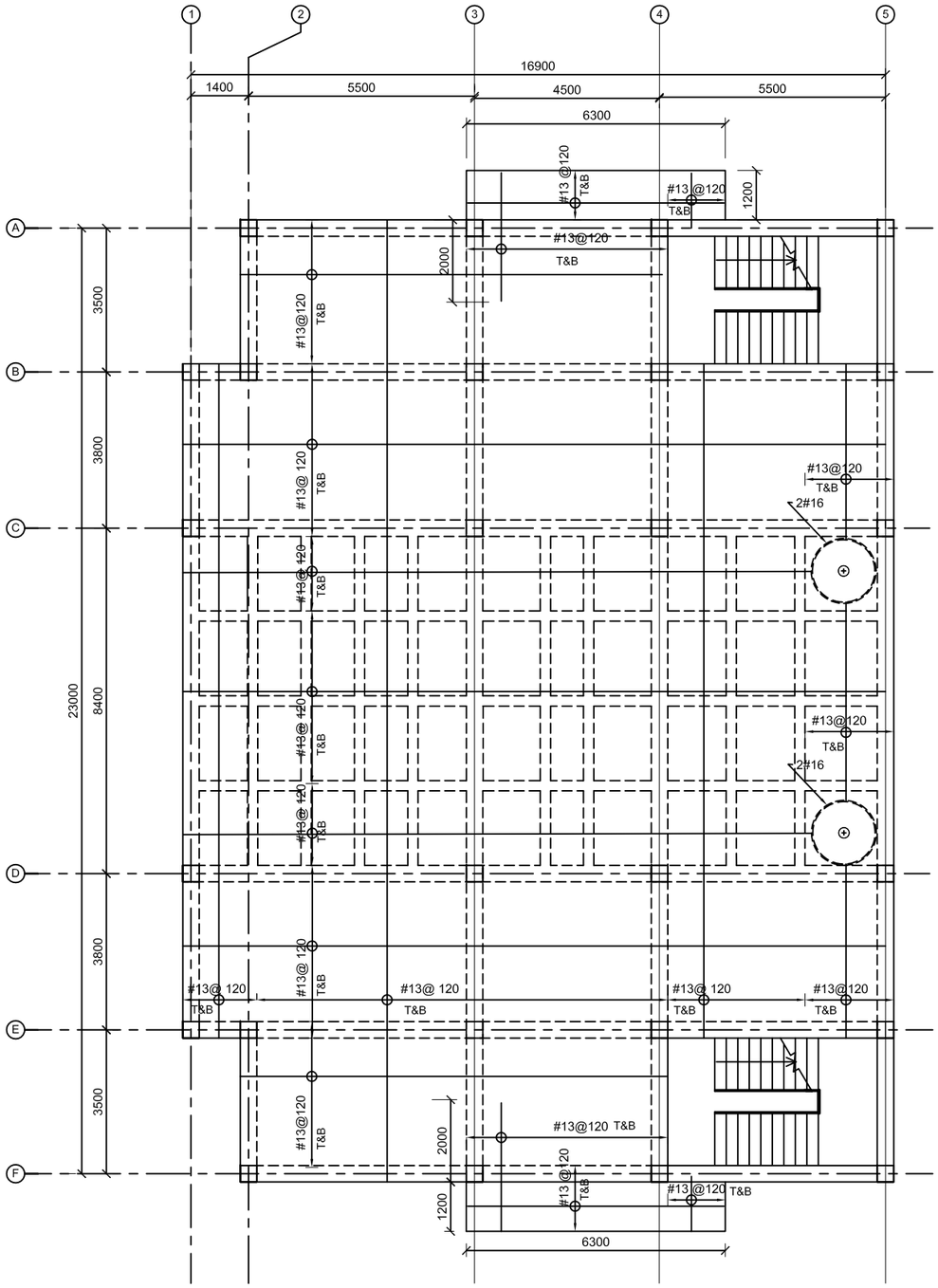

NOTES:

1. REFER TO STRUCTURAL SHEET A_S104 FOR TOP OF SLAB ELEVATION AND SLAB THICKNESS.
2. CONTRACTOR SHALL COORDINATE THE INSTALLATION OF CONCRETE STAIR SYSTEM WITH STRUCTURAL DRAWING A_S118.
3. CONTRACTOR SHALL COORDINATE ALL SLAB PENETRATIONS & DEPRESSION REQUIREMENTS WITH ARCH. & MEP DRAWINGS.
4. CONTRACTOR SHALL COORDINATE THE INSTALLATION OF MASONRY WALL REINF. REQUIREMENTS PRIOR TO CASTING FLOOR/ROOF FRAMING.

1 | SECOND FLOOR SLAB REINFORCEMENT PLAN

A_S115 SCALE: 1:70

0.7M 0 4.2M

SCALE 1:70

PRELIMINARY - NOT FOR CONSTRUCTION

REV	DATE	BY	SUB	APP	DESCRIPTION

DESIGNED V. STEGMEIR
DRAWN M. LORENZ
CHECKED F. HAMMERS
IN CHARGE G. LUCKENBAUGH
DATE 05 DEC. 2009

AFGHAN NATIONAL SECURITY FORCE
Comprehensive Plan for Facilities Development

MINISTRY OF INTERIOR (MoI) - AFGHAN NATIONAL POLICE
PROVINCIAL FIRE STATION TYPE-B

SECOND FLOOR SLAB REINFORCEMENT PLAN

SCALE AS SHOWN

PROJECT NO. –

A_S 115

N:\ANP FIRE STATIONS\~99RENITIAL_FSs\MB_091205\FSB_99RENITIAL_Dwgs\ACAD\A_S115 Second Floor Slab Reinforcement Plan.dwg 12/12/2009 11:30am CAD_9

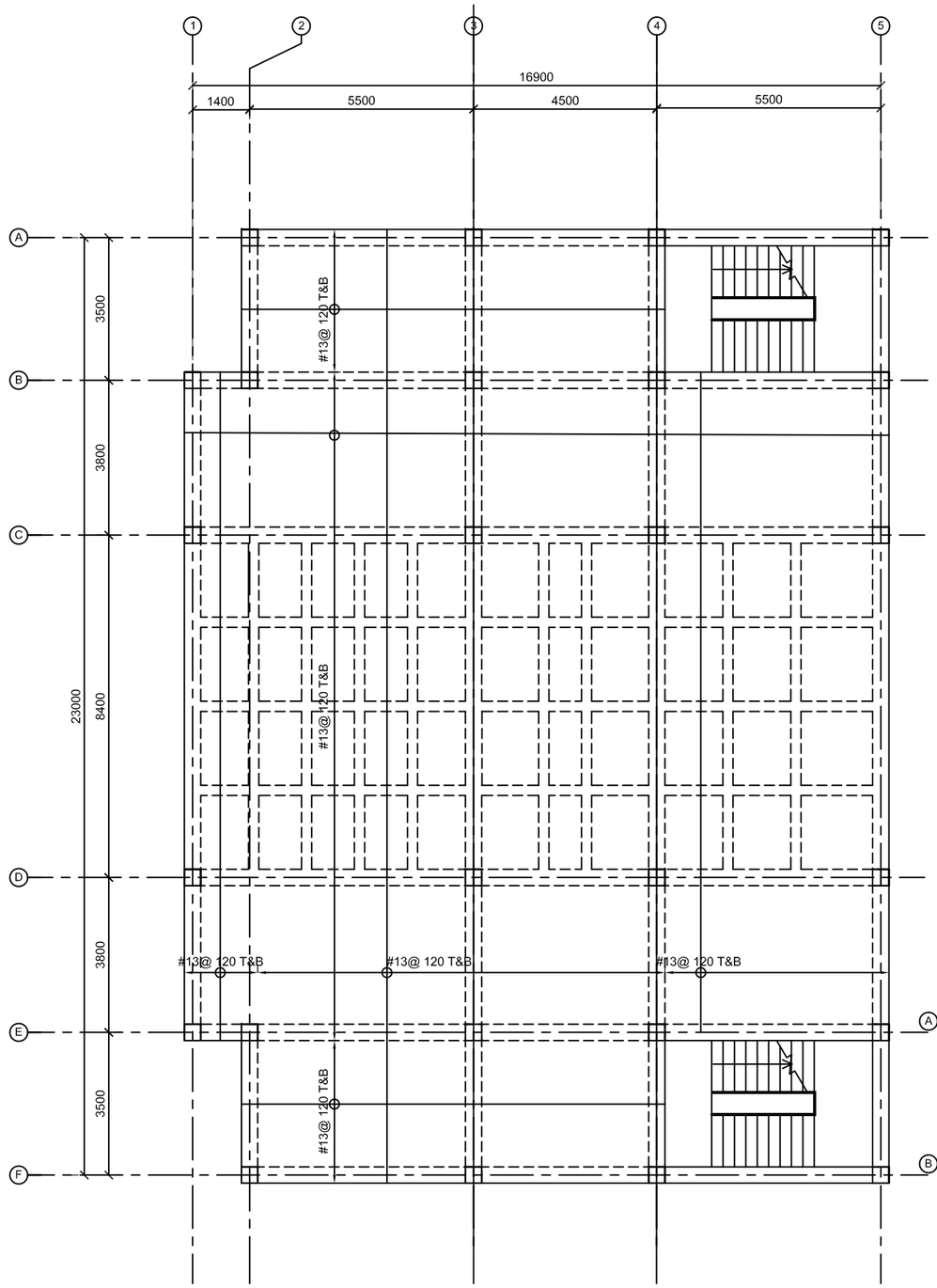

1 ROOF SLAB REINFORCEMENT PLAN

A_S116 SCALE: 1:70

0.7M 0 4.2M

SCALE 1:70

NOTES:

1. REFER TO STRUCTURAL SHEET A_S104 FOR TOP OF SLAB ELEVATION AND SLAB THICKNESS.
2. CONTRACTOR SHALL COORDINATE THE INSTALLATION OF CONCRETE STAIR SYSTEM WITH STRUCTURAL DRAWING A_S118.
3. CONTRACTOR SHALL COORDINATE ALL SLAB PENETRATIONS & DEPRESSION REQUIREMENTS WITH ARCH. & MEP DRAWINGS.
4. CONTRACTOR SHALL COORDINATE THE INSTALLATION OF MASONRY WALL REINF. REQUIREMENTS PRIOR TO CASTING FLOOR/ROOF FRAMING.

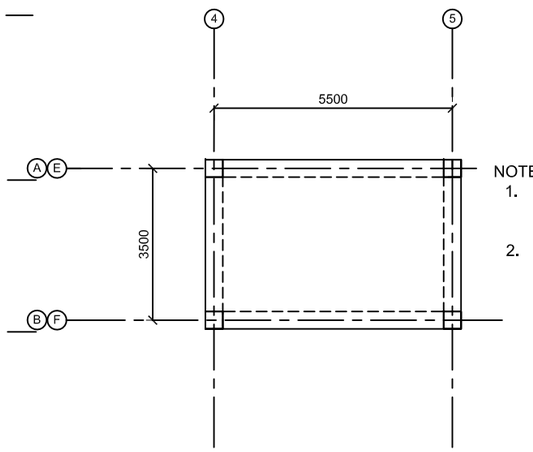

NOTES:

1. STAIR TOWER ROOF SLAB SHALL BE REINFORCED WITH #13'S@200 EW, T&B.
2. REFER TO STRUCTURAL SHEET A_S104 FOR ADDITIONAL INFORMATION.

2 STAIR ROOF SLAB REINFORCEMENT PLAN

A_S116 SCALE: 1:70

0.7M 0 4.2M

SCALE 1:70

PRELIMINARY - NOT FOR CONSTRUCTION

REV	DATE	BY	SUB	APP	DESCRIPTION

DESIGNED V. STEGMEIR
DRAWN M. LORENZ
CHECKED F. HAMMERS
IN CHARGE G. LUCKENBAUGH
DATE 05 DEC. 2009

AFGHAN NATIONAL SECURITY FORCE
Comprehensive Plan for Facilities Development

MINISTRY OF INTERIOR (MoI) - AFGHAN NATIONAL POLICE
PROVINCIAL FIRE STATION TYPE-B

ROOF SLAB REINFORCEMENT PLAN

SCALE AS SHOWN

PROJECT NO. –

A_S 116

N:\ANP FIRE STATIONS\~0929INTIAL_FSs\AAB_091205\FSB_0929INTIAL_Dwgs\in\CAD\A_S116 ROOF Slab Reinforcement Plan.dwg 02/14/2010 1:10pm CAD_9

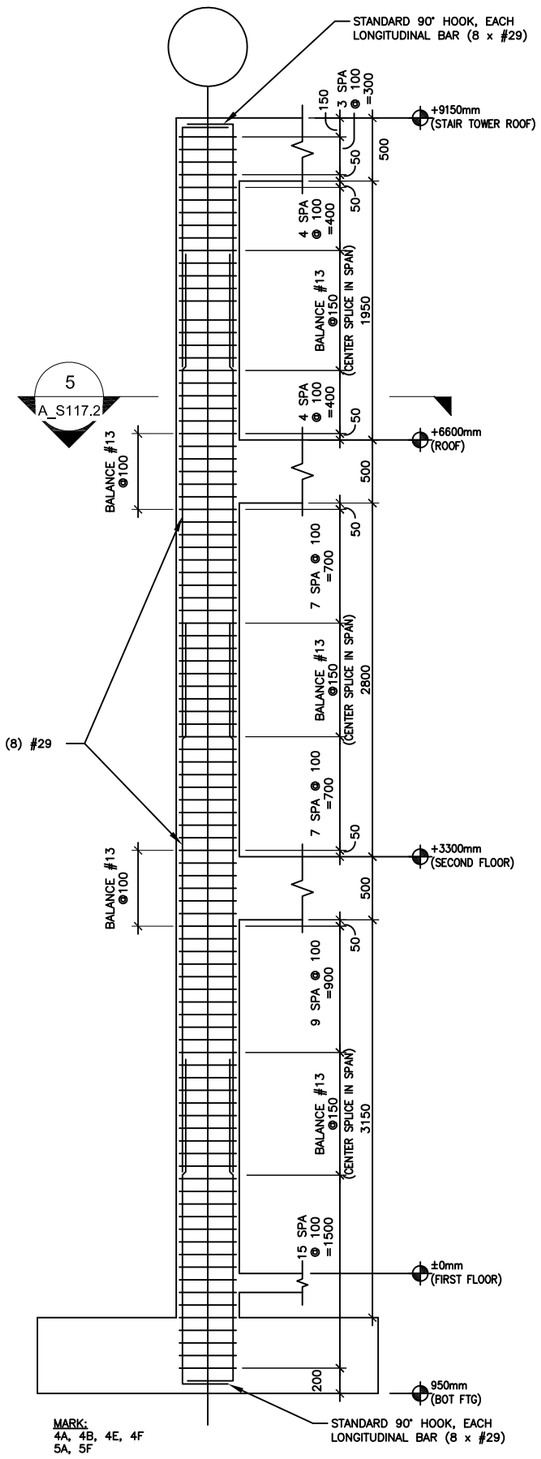

1 SECTION
A_S117.1 TYPICAL FIRESTATION COLUMN REINFORCING DETAIL
SCALE: NOTED

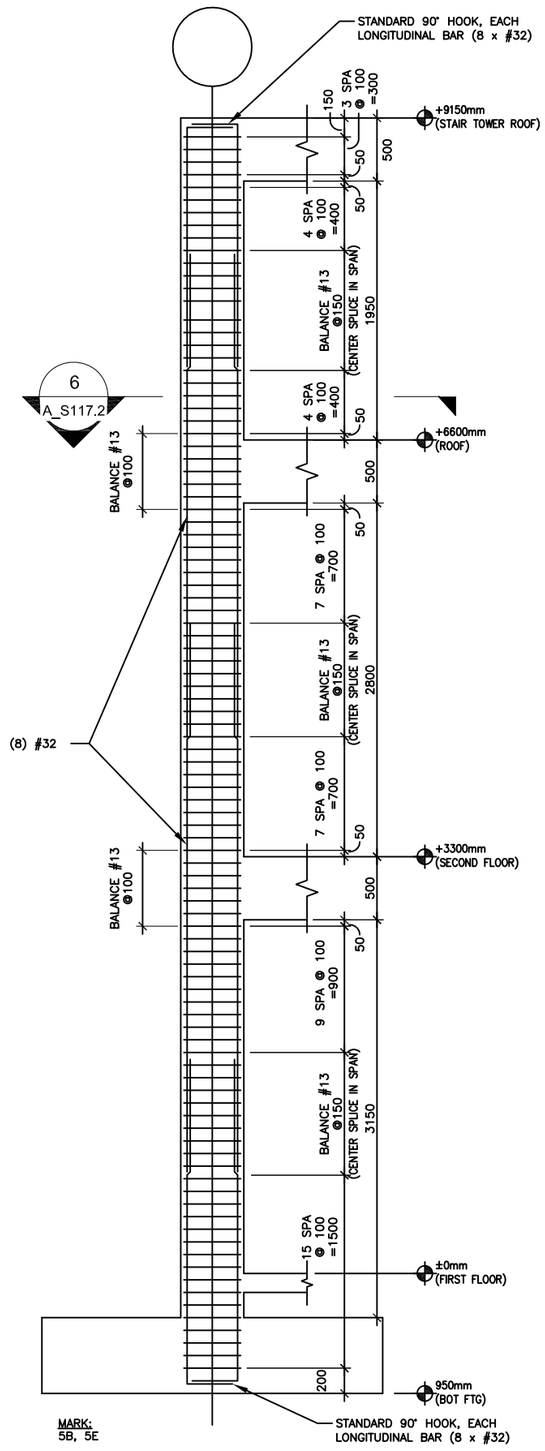

2 SECTION
A_S117.1 TYPICAL FIRESTATION COLUMN REINFORCING DETAIL
SCALE: NOTED

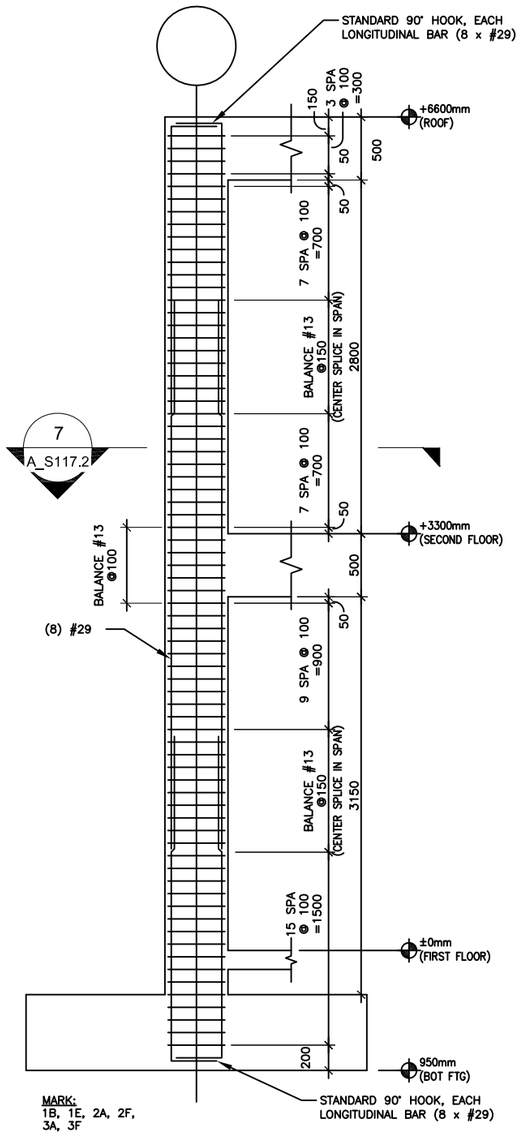

3 SECTION
A_S117.1 TYPICAL FIRESTATION COLUMN REINFORCING DETAIL
SCALE: NOTED

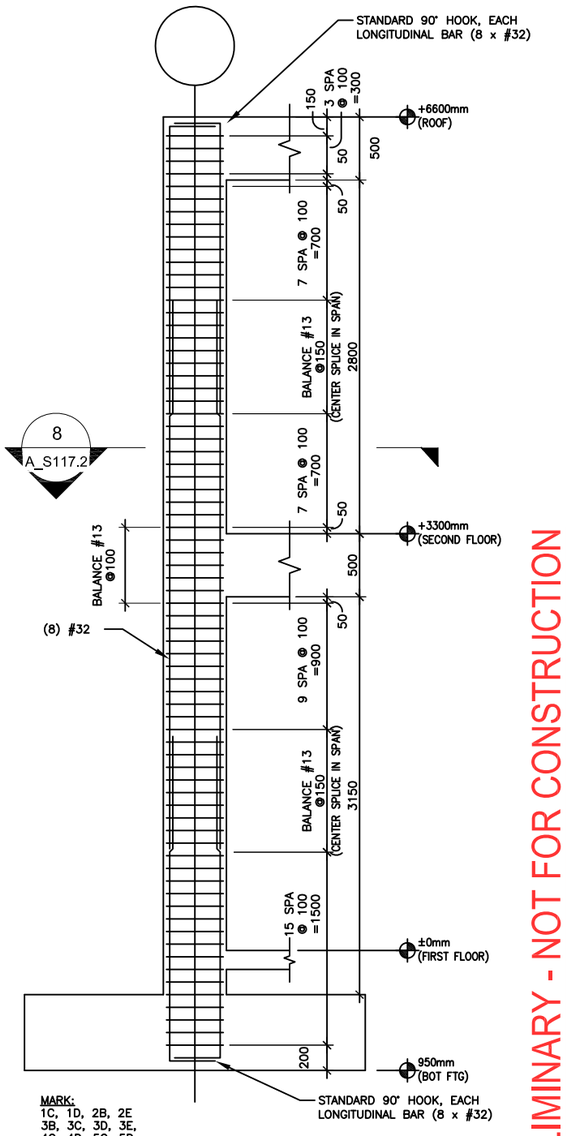

4 SECTION
A_S117.1 TYPICAL FIRESTATION COLUMN REINFORCING DETAIL
SCALE: NOTED

0.4M 0 2M
SCALE 1:40

NOTES
1. SPLICES SHOWN ARE OPTIONAL
2. HOOPS AND TIES ARE No. 13 BAR THROUGHOUT
3. PROVIDE CONTINUOUS REINFORCEMENT AS SHOWN THROUGH JOINT
4. BEAM REINFORCEMENT OMITTED FOR CLARITY.

PRELIMINARY - NOT FOR CONSTRUCTION

REV	DATE	BY	SUB	APP	DESCRIPTION

DESIGNED V. STEGMEIR
DRAWN M. LORENZ
CHECKED F. HAMMERS
IN CHARGE G. LUCKNEBAUGH
DATE 05 DEC 2009

AFGHAN NATIONAL SECURITY FORCE
Comprehensive Plan for Facilities Development

MINISTRY OF INTERIOR (MoI) - AFGHAN NATIONAL POLICE
PROVINCIAL FIRE STATION TYPE-B

COLUMN SCHEDULE

SCALE AS SHOWN

PROJECT NO. –

A_S117.1

N:\ANP FIRE STATIONS\~9929INITIAL_FS\AAB_091205\FSB_9929INITIAL_Drwgs\in\ACAD\A_S117.1-ColumnSchedule.dwg 02/14/2010 10:27am CAD_9

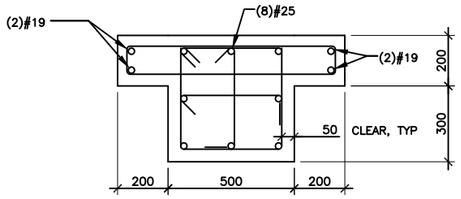

11 SECTION
A_S117.2 TYPICAL TRANSVERSE COLUMN REINFORCING DETAIL
(NTS)

(REFER TO COLUMN ELEVATION FOR LONGITUDINAL BAR SIZE)
(HOOPS, STIRRUPS & TIES No. 13 THROUGHOUT)

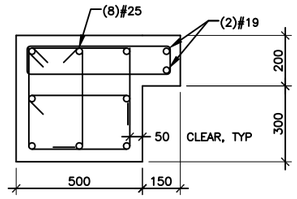

12 SECTION
A_S117.2 TYPICAL TRANSVERSE COLUMN REINFORCING DETAIL
(NTS)

(REFER TO COLUMN ELEVATION FOR LONGITUDINAL BAR SIZE)
(HOOPS, STIRRUPS & TIES No. 13 THROUGHOUT)

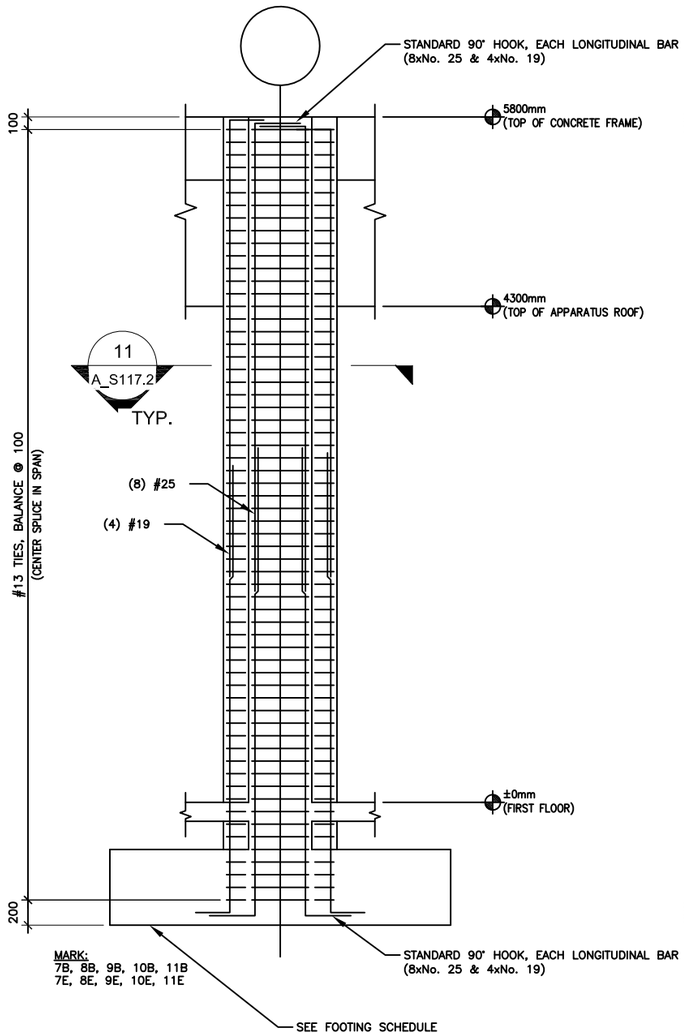

9 SECTION
A_S117.2 TYPICAL VEHICLE BAY COLUMN REINFORCING DETAIL
SCALE: NOTED

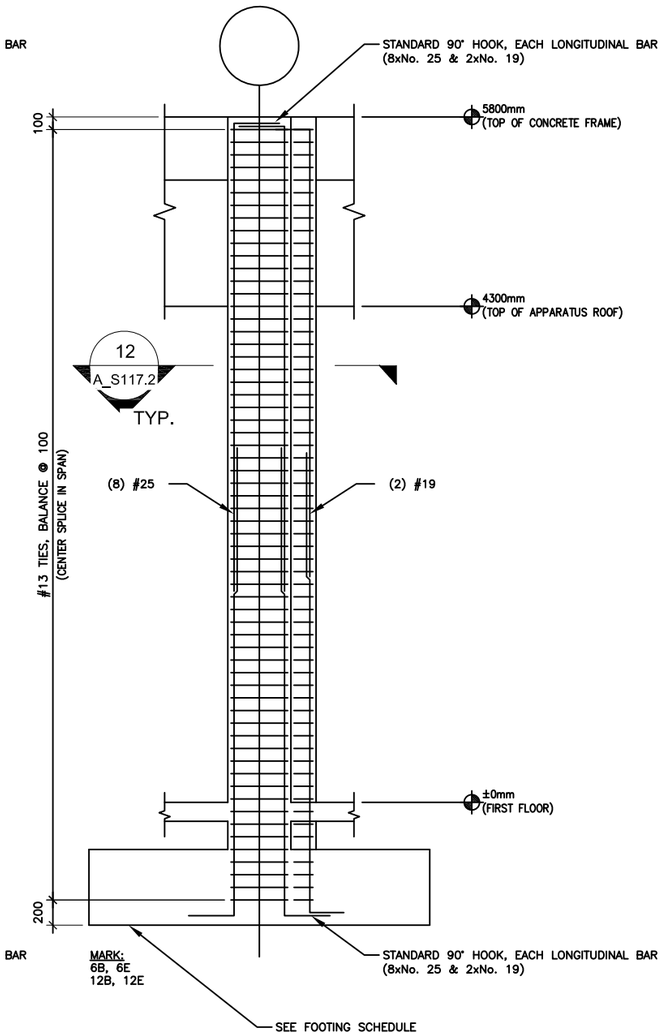

10 SECTION
A_S117.2 TYPICAL VEHICLE BAY COLUMN REINFORCING DETAIL
SCALE: NOTED

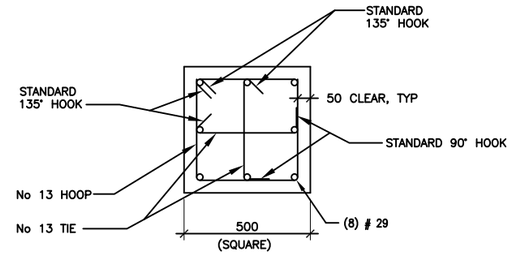

5 SECTION
A_S117.1 TYPICAL TRANSVERSE COLUMN REINFORCING DETAIL
(NTS)

(REFER TO COLUMN ELEVATION FOR LONGITUDINAL BAR SIZE)
(HOOPS, STIRRUPS & TIES No. 13 THROUGHOUT)

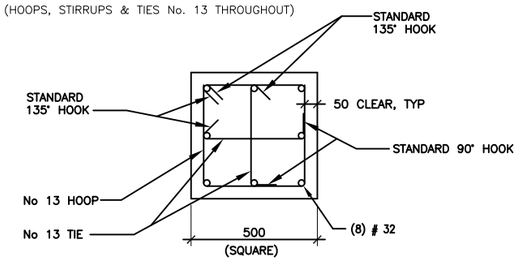

6 SECTION
A_S117.1 TYPICAL TRANSVERSE COLUMN REINFORCING DETAIL
(NTS)

(REFER TO COLUMN ELEVATION FOR LONGITUDINAL BAR SIZE)
(HOOPS, STIRRUPS & TIES No. 13 THROUGHOUT)

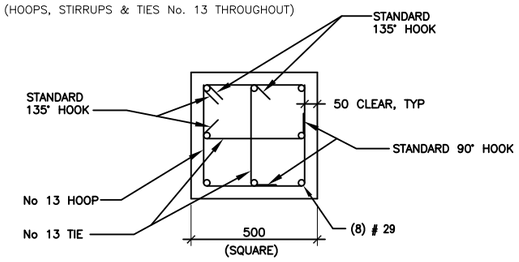

7 SECTION
A_S117.1 TYPICAL TRANSVERSE COLUMN REINFORCING DETAIL
(NTS)

(REFER TO COLUMN ELEVATION FOR LONGITUDINAL BAR SIZE)
(HOOPS, STIRRUPS & TIES No. 13 THROUGHOUT)

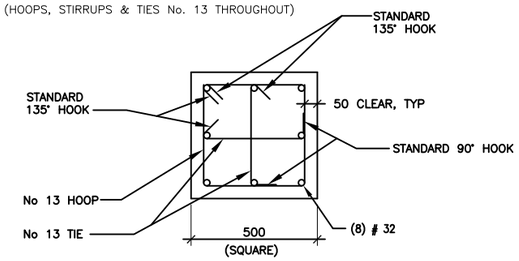

8 SECTION
A_S117.1 TYPICAL TRANSVERSE COLUMN REINFORCING DETAIL
(NTS)

(REFER TO COLUMN ELEVATION FOR LONGITUDINAL BAR SIZE)
(HOOPS, STIRRUPS & TIES No. 13 THROUGHOUT)

NOTES
1. SPLICES SHOWN ARE OPTIONAL
2. HOOPS AND TIES ARE No. 13 BAR THROUGHOUT
3. PROVIDE CONTINUOUS REINFORCEMENT AS SHOWN THROUGH JOINT
4. BEAM REINFORCEMENT OMITTED FOR CLARITY.

PRELIMINARY - NOT FOR CONSTRUCTION

0.4M 0 2M
SCALE 1:40

REV	DATE	BY	SUB	APP	DESCRIPTION

DESIGNED V. STEGMEIR
DRAWN M. LORENZ
CHECKED F. HAMMERS
IN CHARGE G. LUCKNEBAUGH
DATE 05 DEC 2009

AFGHAN NATIONAL SECURITY FORCE
Comprehensive Plan for Facilities Development

MINISTRY OF INTERIOR (MoI) - AFGHAN NATIONAL POLICE
PROVINCIAL FIRE STATION TYPE-B

COLUMN SCHEDULE

SCALE AS SHOWN
PROJECT NO. –

A_S117.2

N:\ANP FIRE STATIONS\~9929NITIAL_FSs\ABS_091205\FS9_9929NITIAL_Drwgs\n\CAD\A_S117.2-ColumnSchedule.dwg 02/14/2010 10:28am CAD_9

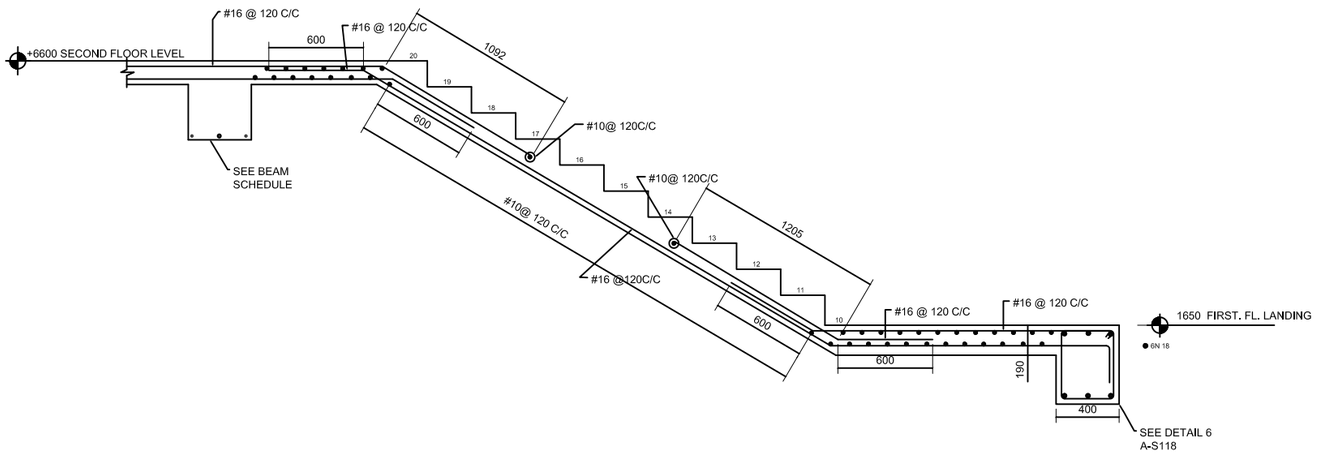

5 SECTION
A_S118 SCALE: 1:20

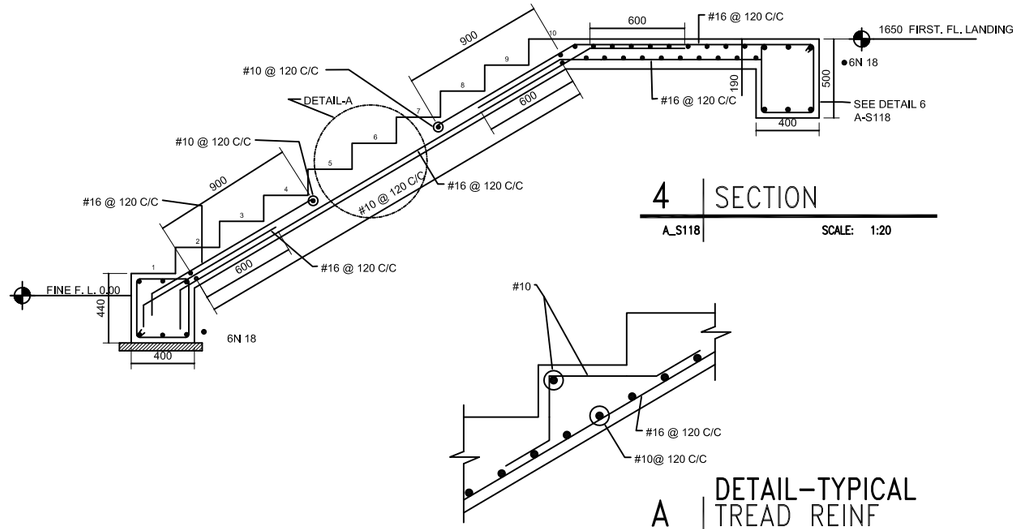

4 SECTION
A_S118 SCALE: 1:20

A DETAIL–TYPICAL TREAD REINF
A_S118 SCALE: N.T.S

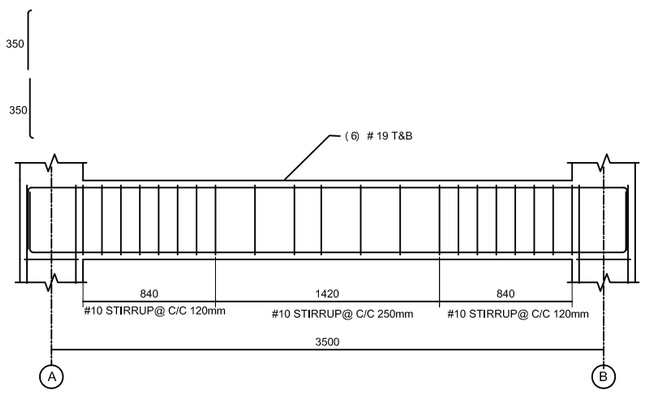

B INTERMEDIATE STAIR BEAM
A_S118 SCALE: N.T.S

NOTES:
LAP CONC. LANDING REINFORCED W/ ELEVATION SLAB STEEL

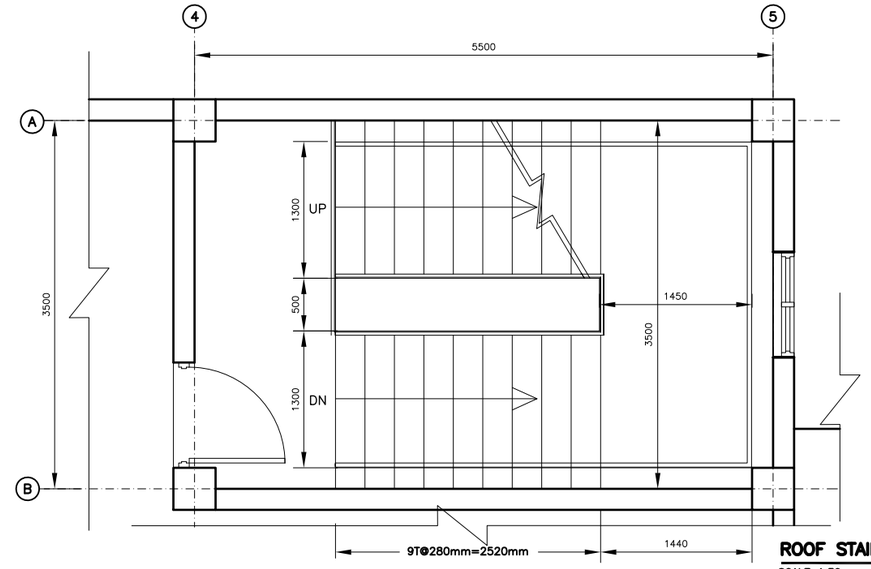

ROOF STAIR PLAN 3 A_S118
SCALE 1:30

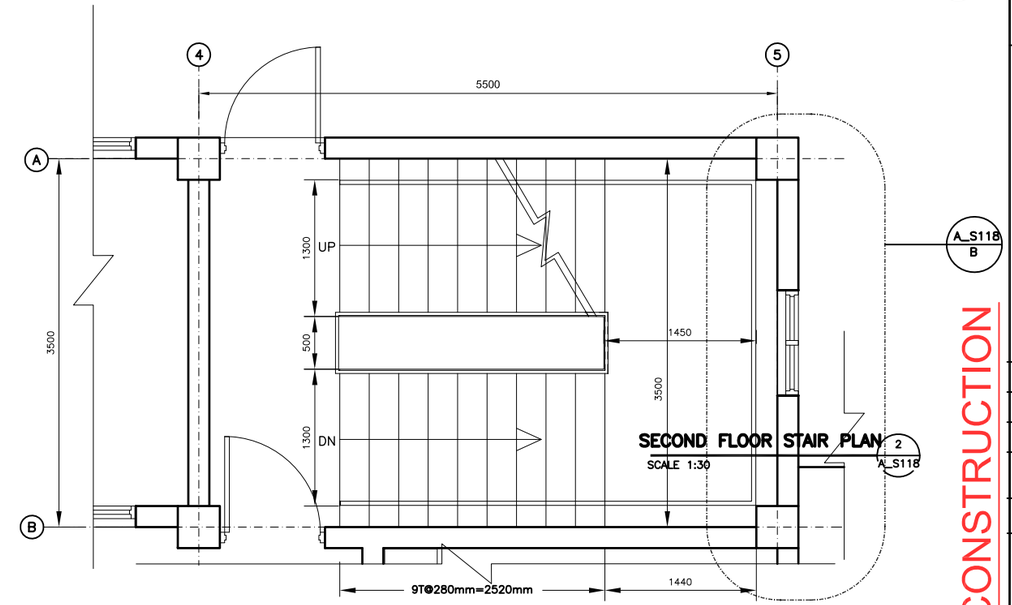

SECOND FLOOR STAIR PLAN 2 A_S118
SCALE 1:30

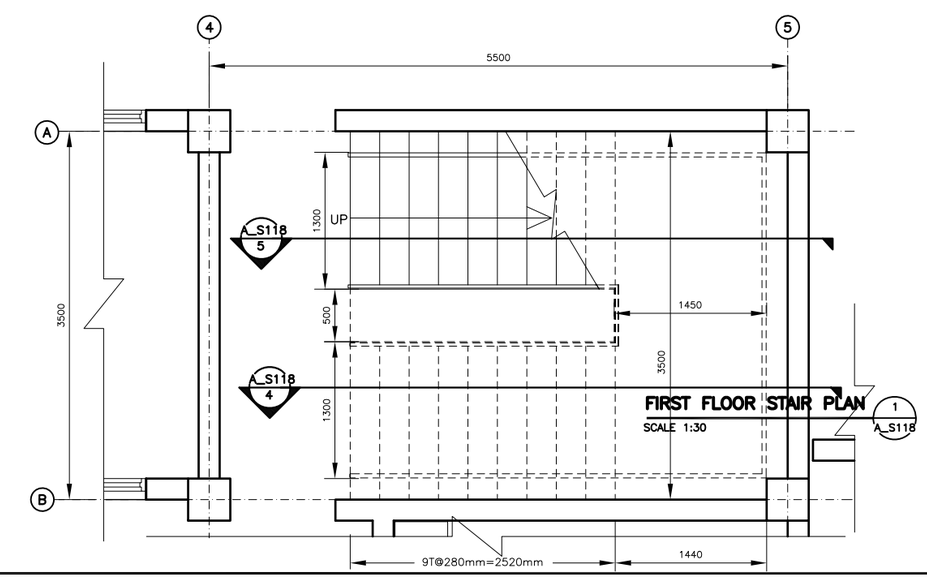

FIRST FLOOR STAIR PLAN 1 A_S118
SCALE 1:30

PRELIMINARY - NOT FOR CONSTRUCTION

REV	DATE	BY	SUB	APP	DESCRIPTION

DESIGNED V. STEGMEIER
DRAWN M. LORENZ
CHECKED F. HAMMERS
IN CHARGE G. LUCKENBAUGH
DATE 05 DEC 2009

AFGHAN NATIONAL SECURITY FORCE
Comprehensive Plan for Facilities Development
MINISTRY OF INTERIOR (MoI) - AFGHAN NATIONAL POLICE
PROVINCIAL FIRE STATION TYPE-B

Stair Section & Reinforcement Plan

SCALE AS SHOWN
PROJECT NO. AS SHOWN
A_S118

N:\ANP FIRE STATIONS\~9999INITIAL_FSsAAB_091205\Y99_9999INITIAL_Drwgs\ACAD\A_S118 Fire station Stairs Reinforcement.dwg 01/31/2010 10:20am CAD_9

SYMBOLS

POWER

- DELTA CONNECTION
- MOTOR
- TRANSFORMER
- WYE CONNECTION
- GROUND CONNECTION
- JUNCTION BOX, CEILING/WALL MOUNTED
- PB — PULL BOX
- RELAY CONTACT, NORMALLY OPEN
- RELAY CONTACT, NORMALLY CLOSED
- FUSE
- CIRCUIT BREAKER
  - 100AF FRAME SIZE
  - 70AT TRIP AMPS
- S — STARTER
- 200/3 — UNFUSED SAFETY SWITCH, RATING AS NOTED
  - POLES
  - AMPERES
- 30/15/3 — FUSED SAFETY SWITCH, RATING AS NOTED
  - POLES
  - FUSE AMPERE RATING
  - SWITCH AMPERE RATING
- 1 — MAGNETIC MOTOR STARTER, RATING AS NOTED
  - NEMA SIZE
- COMBINATION TYPE MAGNETIC MOTOR STARTER, RATING AS NOTED
- G — GENERATOR, POWER
- BATTERY
- LIGHTNING ARRESTER
- M — METER
- A — AMMETER
- V — VOLTMETER
- W — WATTMETER
- W — WATT-HOUR METER
- R — RELAY
- AUTOMATIC TRANSFER SWITCH
- F — FUSED DISCONNECT SWITCH

- M — MOTOR
- T — TRANSFORMER
- EARTH GROUND
- AIR TERMINAL
- J — JUNCTION BOX
- CABLE TRAY/WIREWAY, AS INDICATED ON THE DRAWINGS
- BRANCH CIRCUIT HOMERUN, TICK MARKS INDICATE NUMBER OF #12 AWG CONDUCTORS
  - GROUNDING CONDUCTOR
  - NEUTRAL CONDUCTOR
  - HOT CONDUCTOR
  - NO TICK MARKS INDICATES 2#12, 1#12G
- RC — RIGID CONDUIT LINE
- DB — DIRECT BURIAL CABLE
- P — POWER DUCT
- RACEWAY IN CEILING OR WALL
- RACEWAY UNDERFLOOR, UNDERGROUND
- ONE CROSSMARK PER WIRE (3 WIRES UNLESS SHOWN), GROUND NOT SHOWN
- FLEXIBLE RACEWAY
- HOME RUN (ONE ARROW PER CIRCUIT)
- CONDUIT (UP, DOWN)
- EXPOSED RACEWAY
- 380/220V, 50HZ, 4W DISTRIBUTION PANELBOARD (FLUSH, SURFACE MOUNTED)
- WOOD BACKBOARD
- PUSH BUTTON
- FLOOR OUTLET, DATA COMMUNICATION
- D — OUTLET, DATA COMMUNICATION
- C — RECEPTACLE, CLOCK HANGER
- DUPLEX RECEPTACLE
  - (WP=WEATHERPROOF)
  - (G=GROUND FAULT INTERRUPTING)
  - (C=ISOLATED GROUND)
- ABOVE-COUNTER DUPLEX RECEPTACLE
- QUADRAPLEX
- SINGLE RECEPTACLE
- S — SINGLE RECEPTACLE WITH SWITCH
- SPECIAL RECEPTACLE
- VOICE/DATA OUTLET
- STARTER
- S — SWITCH
  - F: FUSED
  - L: LOCK
  - M: MOTOR RATED SWITCH
  - MP: MOTOR SNAP WITH PILOT LIGHT
  - WP: WEATHER PROOF
  - K: KEY OPERATED
  - LM: LOW VOLTAGE MASTER
  - MC: MOMENTARY CONTACT
  - P: WITH PILOT LIGHT
  - RC: REMOTE CONTROL
  - X: EXPLOSION PROOF

LIGHTING

- S_ — SPST TOGGLE SWITCH
  - BLANK: SINGLE POLE
  - 2: DOUBLE POLE
  - 3: THREE WAY
  - 4: FOUR WAY
  - D: DIMMER
  - K: KEY OPERATED
  - LV: LOW VOLTAGE
  - L: LOCK
  - LM: LOW VOLTAGE MASTER
  - P: WITH PILOT LIGHT
  - T: TIMER OPERATED
  - RC: REMOTE CONTROL
  - X: EXPLOSION PROOF
  - WP: WEATHER PROOF
  - MO: OCCUPANCY SENSOR
- STRIP/INDUSTRIAL FLUORESCENT FIXTURE, TYPE INDICATED
- STRIP/INDUSTRIAL FLUORESCENT FIXTURE W/EMERGENCY BATTERY, TYPE INDICATED.
- 2'X4' FLUORESCENT LIGHTING FIXTURE, TYPE INDICATED
- 2'X4' FLUORESCENT LIGHTING FIXTURE W/EMERGENCY BATTERY, TYPE INDICATED
- WALL MOUNTED LIGHTING FIXTURE
- RECESSED-MOUNTED
- CEILING-MOUNTED OR SUSPENDED
- RECESSED GRID-MOUNTED FLUORESCENT
- SURFACE-MOUNTED FLUORESCENT
- OS — OCCUPANCY SENSOR
- EXIST (WALL, CEILING)
- EMERGENCY LIGHTING BATTERY UNIT WITH 2 LAMP HEADS
- REMOTE EMERGENCY LIGHTING 1 OR 2 LAMP HEADS
- POLE MOUNTED SITE LIGHT, ONE LUMINARIES
- POLE MOUNTED SITE LIGHT, TWO LUMINARIES
- 2'X2' FLUORESCENT LIGHTING FIXTURE, TYPE INDICATED
- 2'X2' FLUORESCENT LIGHTING FIXTURE W/EMERGENCY BATTERY, TYPE INDICATED
- TRACK LIGHT
- BOLLARD
- P — PHOTOCELL
- LC — LIGHTING CONTACTOR

FIRE ALARM EQUIPMENT

- F — FIRE ALARM PULL STATION
- F — FIRE ALARM HORN/STROBE/SPEAKER. WALL MOUNT 80" AFF OR 6" BELOW CEILING, WHICHEVER IS LOWER NUMBER DESIGNATES CANDELA LEVEL
- F — FIRE ALARM STROBE ONLY. WALL MOUNT 80" AFF OR 6" BELOW CEILING, WHICHEVER IS LOWER NUMBER DESIGNATES CANDELA LEVEL
- S — FIRE ALARM SMOKE DETECTOR
- S — FIRE ALARM DUCT MOUNTED SMOKE DETECTOR
- FAP — FIRE ALARM CONTROL PANEL

GENREAL NOTES

1. ALL ELECTRICAL WORK SHALL BE IN ACCORDANCE WITH THE LATEST APPROVED NEC EDITION, LOCAL CODES AND REGULATIONS.
2. A GREEN EQUIPMENT GROUNDING CONDUCTOR INSULATED OR BARE WIRE SHALL BE INCLUDED IN EACH CABLE OR CONDUIT AND ATTACHED TO THE FRAME OF ENCLOSURE OF EVERY ELECTRICALLY ENERGIZED DEVICE. CONDUIT SHALL NOT BE USED AS GROUNDING CONDUCTOR. THE CONDUIT GROUND IS CONSIDERED AS BACK UP GROUNDING.
3. MINIMUM TRADE CONDUIT SIZE SHALL BE 21MM. CONDUITS CONTAINING MORE THAN THREE CURRENT CARRYING CONDUCTORS SHALL BE ADJUSTED ACCORDING TO NEC CODEBOOK (TABLE 310.15(B)(2)(a)).
4. ALL EXTERIOR CONDUIT SHALL BE RIGID GALVANIZED STEEL AND ALL UNDERGROUND CONDUITS SHALL BE PVC UNLESS OTHERWISE NOTED.
5. ROUTE POWER AND LIGHTING BRANCH CIRCUIT CONDUCTORS TO THEIR PERSPECTIVE CIRCUITS IN LOAD CENTER.
6. COORDINATE LIGHTING FIXTURES LOCATIONS WITH OTHER EQUIPMENT PRIOR TO INSTALLATION.
7. ALL CONDUIT RUNS SHALL BE MADE EITHER PARALLEL OR PERPENDICULAR TO STRUCTURES.
8. FIELD VERIFY ALL DIMENSIONS PRIOR TO COMMENCING WORK.
9. ALL CONDUITS AND CABLES SHALL HAVE A NON-CORRODING TAG. ALL WIRES SHALL HAVE A NON-CORRODING TAG. ALL TERMINAL BLOCKS SHALL HAVE A NON-CORRODING IDENTIFICATION OF WIRE NUMBERS FROM SCHEMATICS.
10. ALL MATERIAL FURNISHED BY THE CONTRACTOR SHALL BE NEW AND UL LISTED. MATERIALS SHALL BE SUBJECT TO TEST, INSPECTION AND APPROVAL BY THE OWNER OR THE ENGINEERS.
11. WIRES AND CABLES SHALL HAVE BE PULLED INTO THEIR CONDUITS BY APPLICATION OF SUITABLE LUBRICANTS THAT WILL HAVE NO INJURIOUS EFFECT ON THE COVERING TO THE CONDUCTOR. OIL OR GREASE SHALL NOT BE USED. WIRES AND CABLES SHALL BE INSTALLED WITHOUT JOINTS OR SPLICES INSOFAR AS PRACTICAL. SUFFICIENT WIRE SHALL BE LEFT AT ALL OUTLETS FOR CONNECTING FIXTURES AND WIRING DEVICES. WHEN FITTINGS ARE REQUIRED WITH PLUGS FOR POSSIBLE FUTURE EXTENSIONS, SUFFICIENT LOOP IN WIRE SHALL BE LEFT FOR THIS PURPOSE.
12. ALL CIRCUITS SHALL BE CORRECTLY IDENTIFIED AND A DIRECTORY SHALL BE MADE FOR THE LOAD CENTER.
13. THE CONTRACTOR SHALL INSTALL AND TEST THE COMPLETE LIGHTING AND RECEPTACLE SYSTEMS MAKING ALL CONNECTIONS TO THE LIGHTING FIXTURES, RECEPTACLES, APPARATUS AS SHOWN ON THE ENGINEERS' DRAWINGS.
14. THE COMPLETE POWER SYSTEM SHALL BE INSTALLED AND TESTED, MAKING ALL CONNECTIONS TO THE EQUIPMENT AND APPARATUS AS SHOWN ON THE ENGINEERS' DRAWINGS.
15. SEISMIC REQUIREMENTS ARE SITE SPECIFIC. CONTRACTOR SHALL DETERMINE WHETHER THE SITE IS IN A SEISMIC ZONE.
16. CONTRACTOR SHALL BE RESPONSIBLE FOR THE SEISMIC REQUIREMENTS AS SPECIFIED IN SECTION 26 05 48.00 10 SEISMIC PROTECTION FOR ELECTRICAL EQUIPMENT AND THE UNIFIED FACILITIES CRITERIA (UFC) 3-310-04 SEISMIC DESIGN FOR BUILDINGS.

ABBREVIATIONS

1PH	SINGLE PHASE
1P	SINGLE POLE
2/C	TWO-CONDUCTOR
3/C	THREE-CONDUCTOR
3PH	THREE PHASE
4/C	FOUR-CONDUCTOR
4W	FOUR WIRE
A/C UNIT	AIR CONDITIONING UIT
A/E	ARCHITECT/ENGINEER
AAP	ALARM ANNUNCIATOR PANEL
AC	ALTERNATING CURRENT OR ARMORED
ACC	ACCESSIBLE
ADDL	ADDITIONAL
ADJ	ADJACENT
ADO	AUTOMATIC DOOR OPENER
AF	AMP FRAME
AFC	AUTOMATIC FREQUENCY CONTROL
AFF	ABOVE FINISHED FLOOR
AFG	ABOVE FINISHED GRADE
AH	AMPERE HOUR
AHJ	AUTHORITY HAVING JURISDICTION
AIC	AMPERE INTERRUPTING CAPACITY
ALT	ALTERNATE
AMB	AMBIENT
AMP OR A	AMPERE
ARCH	ARCHITECT
ASC	AMPS SHORT CIRCUIT
AT	AMPERE TRIP
ATS	AUTOMATIC TRANSFER SWITCH
AUTO	AUTOMATIC
AV	AUDIO VISUAL
BAT	BATTERY
BC	BARE COPPER
BD	BOARD
BFF	BELOW FINISH FLOOR
BIL	BASIC INSULATION LEVEL
BLDG	BUILDING
BPIP	BOILER PLANT INSTRUMENTATION PANEL
BARKER	BREAKER
BYP	BY PASS
C OR CD	CONDUIT
CAB	CABINET
CALC	CALCULATION
CAP	CAPACITY
CAT	CATALOG
CATV	COMMUNITY ANTENNA TELEVISION
CCR	CONTROL CONTRACTOR
CCTV	CLOSED CIRCUIT TELEVISION
CDA	CANDELA
CD	CONSTRUCTION DOCUMENTS
CF	CONTRACTOR FURNISHED
CF/CI	CONTRACTOR FURNISHED/CONTRACTOR INSTALLED
CF/OI	CONTRACTOR FURNISHED/OWNER INSTALLED
CFE	CONTRACTOR FURNISHED EQUIPMENT
CHW	CHILLED WATER
CHWP	CHILLED WATER PUMP
CKT	CIRCUIT
CKT BARKER	CIRCUIT BREAKER
CLF	CURRENT LIMITING FUSE
CLG	CEILING
CMU	CONCRETE MASONRY UNIT
COAX	COAXIAL CABLE
COMM	COMMUNICATION
CONC	CONCRETE
CONT	CONTINUE
CONTR	CONTRACTOR
COORD	COORDINATE
CPT	CONTROL POWER TRANSFORMER
CRI	COLOR RENDERING INDEX
CT	CURRENT TRANSFORMER
CTV	CABLE TELEVISION
CU	COPPER
CU FT	CUBIC FEET
CUR	CURRENT
DB	DIRECT BURIAL
DC	DIRECT CURRENT
DCP	DIMMER CONTROL PANEL
DEG C	DEGREE CELSIUS
DEG F	DEGREE FAHRENHEIT
DEMO	DEMOLITION
DIAG	DIAGRAM
DISC	DISCONNECT
DISTR	DISTRIBUTION
DISTR PNL	DISTRIBUTION PANEL
DMR SW	DIMMER SWITCH
DN	DOWN
DPDT	DOUBLE POLE, DOUBLE THROW
DPST	DOUBLE POLE, SINGLE THROW
DRSW	DOOR SWITCH
DS	DISCONNECT SWITCH
DWG	DRAWINGS
EC	EMPTY CONDUIT
EG	EQUIPMENT GROUND
EL	ELEVATION
ELEC	ELECTRICAL
ELEV	ELEVATOR
EMCP	EMERGENCY MONITORING CONTROL PANEL
EMER	EMERGENCY
EMI	ELECTROMAGNETIC INTERFERENCE
EMT	ELECTRICAL METALLIC TUBING
ENCL	ENCLOSURE
EPO	EMERGENCY POWER OFF
EPRF	EXPLOSION PROOF
ESMT	EASEMENT
EWC	ELECTRIC WATER COOLER
EWH	ELECTRIC WATER HEATER
FA	FIRE ALARM
FAAP	FIRE ALARM ANNUNCIATOR PANEL
FABL	FIRE ALARM BELL
FABX	FIRE ALARM BOX
FACP	FIRE ALARM CONTROL PANEL
FC	FOOT CANDLE
FIXT	FIXTURE
FLA	FULL LOAD AMPS
FLEX	FLEXIBLE METALLIC CONDUIT
FLT	FLOOD LIGHT
FLUOR	FLUORESCENT
FOUTT	TELEPHONE FLOOR OUTLET
FP	FIRE PROTECTION
FT	FEET
FU SW	FUSED SWITCH
FVNR	FULL VOLTAGE NON-REVERSING
FVR	FULL VOLTAGE REVERSING
GND	GROUND
GEN	GENERATOR
GFCI	GROUND FAULT CIRCUIT INTERRUPTER
GTB	GROUND TERMINAL BOX
GEC	GROUND ELECTRODE CONDUCTOR
HID	HIGH INTENSITY DISCHARGE
HOA	HAND-OFF-AUTOMATIC
HP	HORSEPOWER
HT	HEIGHT
HZ	HERTZ
IESNA	ILLUMINATION ENGINEERING SOCIETY OF NORTH AMERICA
IMC	INTERMEDIATE METAL CONDUIT
INC	INCANDESCENT
IR	INFRARED
J-BOX	JUNCTION BOX
KV	KILOVOLT
KVA	KILOVOLT AMPERE
KVAH	KILOVOLT AMPERE PER HOUR
KVAR	KILOVOLT AMPERE PER HOUR
KW	KILOWATT
KWH	KILOWATT HOUR
KWHM	KILOWATT HOUT METER
LED	LIGHT EMITTING DIODE
LF	LINEAR FEET
LM	LUMEN
LP	LIGHT POLE
LPS	LOW PRESSURE SODIUM
LRA	LOCKED ROTOR AMPS
LTCP	LOCAL TEMPERATURE CONTROL PANEL
LTG	LIGHTING
LTG PNL	LIGHTING PANEL
LV	LOW VOLTAGE
MATV	MASTER ANTENNA TELEVISION
MAX	MAXIMUM
MB	MAIN BREAKER
MC	METAL CLAD
MCA	MINIMUM CIRCUIT AMPS
MCB	MAIN CIRCUIT BREAKER
MCC	MOTOR CONTROL CENTER
MDP	MAIN DISTRIBUTION PANEL
MECH	MECHANICAL
MG	MOTOR GENERATOR
MH	MANHOLE
MIN	MINIMUM
MOCP	MAXIMUM OVER CURRENT PROTECTION
MLO	MAIN LUGS ONLY
MTD	MOUNTED
MTG	MOUNTING
MTS	MANUAL TRANSFER SWITCH
MV	MEDIUM VOLTAGE
MVA	MEGAVOLT AMPS
MW	MEGAWATT
NA	NOT APPLICABLE
NEC	NATIONAL ELECTRICAL CODE
NEMA	NATIONAL ELECTRICAL MANUFACTURERS ASSOCIATION
NEUT OR N	NEUTRAL
NFPA	NATIONAL FIRE PROTECTION ASSOCIATION
NIC	NOT IN CONTRACT
NL	NIGHT LIGHT
NO	NORMALLY OPEN
NS	NO SCALE
NTS	NOT TO SCALE
OL	OVERLOAD
P	POLE
PA	PUBLIC ADDRESS
PB	PANELBOARD
PEC	PHOTOELECTRIC CELL
PED	PEDESTAL
PEND	PENDENT
PF	POWER FACTOR
PH	PHASE
PNL	PANEL
POD	POWER OPERATED DAMPER
POS	POINT OF SERVICE
PT	POTENTIAL TRANSFORMER
PTRV	POWER TYPE ROOF VENTILATION
PVC	POLYVINYL CHLORIDE (PLASTIC)
PWR	POWER
RCP	REFLECTED CEILING PLAN
REC	RECESSED
RECP	RECEPTACLE
RGS	RIGID GALVANIZED STEEL
RM	ROOM
RMS	ROOT MEAN SQUARE
REQD	REQUIRED
SCC	SHORT CIRCUIT CAPACITY
SES	SERVICE ENTRANCE SECTION
SD	SMOKE DETECTOR
SF	SQUARE FOOT
SHT	SHEET
SI	INTERNATIONAL SYSTEM OF UNITS
SPEC	SPECIFICATION
SPST	SINGLE POLE, SINGLE THROW
SURF	SURFACE
SW	SWITCH
SWBD	SWITCHBOARD
TC	TIME CLOCK
TEL	TELEPHONE
TP	TWISTED PAIR
TPS	TWISTED PAIR SHIELDED
TTB	TELEPHONE TERMINAL BOARD
TV	TELEVISION
TYP	TYPICAL
UFD	UNDERFLOOR DUCT
UL	UNDERWRITERS LABORATORY
UON	UNLESS OTHERWISE NOTED
UPS	UNINTERRUPTIBLE POWER SUPPLY
UTIL	UTILITY
V	VOLT
VA	VOLT-AMPERE
VAR	VOLT-AMPERE REACTIVE
VFD	VARIABLE FREQUENCY DRIVE
VPS	VACUUM PRESSURE SWITCH
W	WATT OR WIRE
WH	WATT HOUR
WM	WATT METER
WP	WEATHERPROOF
XLP	CROSS LINKED POLYETHYLENE
XFMR	TRANSFORMER
ZSC	LIMIT SWITCH CLOSED
ZSO	LIMIT SWITCH OPEN

PRELIMINARY - NOT FOR CONSTRUCTION

REV	DATE	BY	SUB	APP	DESCRIPTION

DESIGNED M. ESTAFANOUS
DRAWN M. ESTAFANOUS
CHECKED B. CRAWFORD
IN CHARGE D. WHEELER
DATE 5 DEC 2009

AFGHAN NATIONAL SECURITY FORCE
Comprehensive Plan for Facilities Development
MINISTRY OF INTERIOR (MoI) - AFGHAN NATIONAL POLICE
PROVINCIAL FIRE STATION - TYPE-B

Legend, Abbreviations & General Notes

SCALE AS SHOWN

PROJECT NO. 6151-08-0328

A_E000

J:\6151-08-0328 Afghanistan\Task 32.20 Fire Station B\Cad\A_E000 Legend Abbreviations and general notes.dwg 12/03/2009 4:46pm mssatafanous

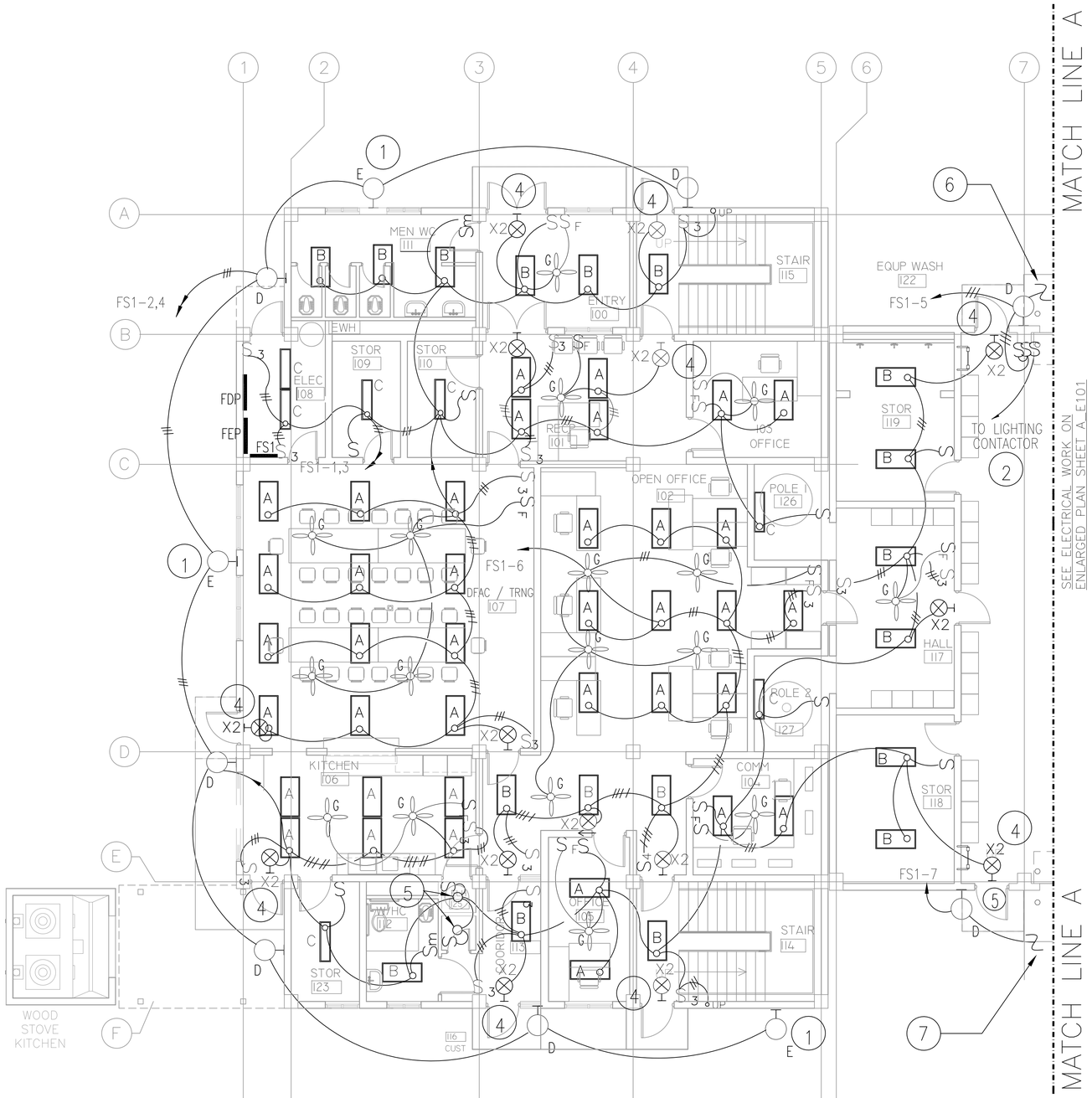

PLAN NOTES

1. MOUNT FIXTURE AS HIGH AS POSSIBLE.
2. MOMENTARY CONTACT SWITCH TO CONTROL ELECTRICALLY OPERATED MECHANICALLY HELD LIGHTING CONTACTOR MOUNTED ADJACENT TO PANEL FS1 TO CONTROL TRUCK BAY LIGHTING.
3. NOT USED.
4. CONNECT EXIT LIGHTS UN-SWITCHED.
5. 240 VOLT, 600 WATT PORCELAIN BASE SOCKET WITH 100 WATT 220 VOLT INCANDESCENT LAMP.
6. SEE SHEET A_E101 FOR CONTINUATION TO LIGHTING CIRCUIT 'FS1-5'.
7. SEE SHEET A_E101 FOR CONTINUATION TO LIGHTING CIRCUIT 'FS1-7'.

FIRST FLOOR – LIGHTING PLAN I

SCALE : 1:75

PRELIMINARY - NOT FOR CONSTRUCTION

REV	DATE	BY	SUB	APP	DESCRIPTION

DESIGNED L. TAYLOR
DRAWN L. TAYLOR
CHECKED B. CRAWFORD
IN CHARGE D. WHEELER
DATE 5 DEC 2009

AFGHAN NATIONAL SECURITY FORCE
Comprehensive Plan for Facilities Development
MINISTRY OF INTERIOR (MoI) - AFGHAN NATIONAL POLICE
PROVINCIAL FIRE STATION - TYPE-B
First Floor - Lighting Plan I

SCALE AS SHOWN

PROJECT NO. 6151-08-0328

A_E100

J:\6151-08-0328 Afghanistan\Task 32.20 Fire Station B\Cad\A_E100 FIRST FLOOR LIGHTING PLAN.dwg 12/02/2009 3:41pm swilliams

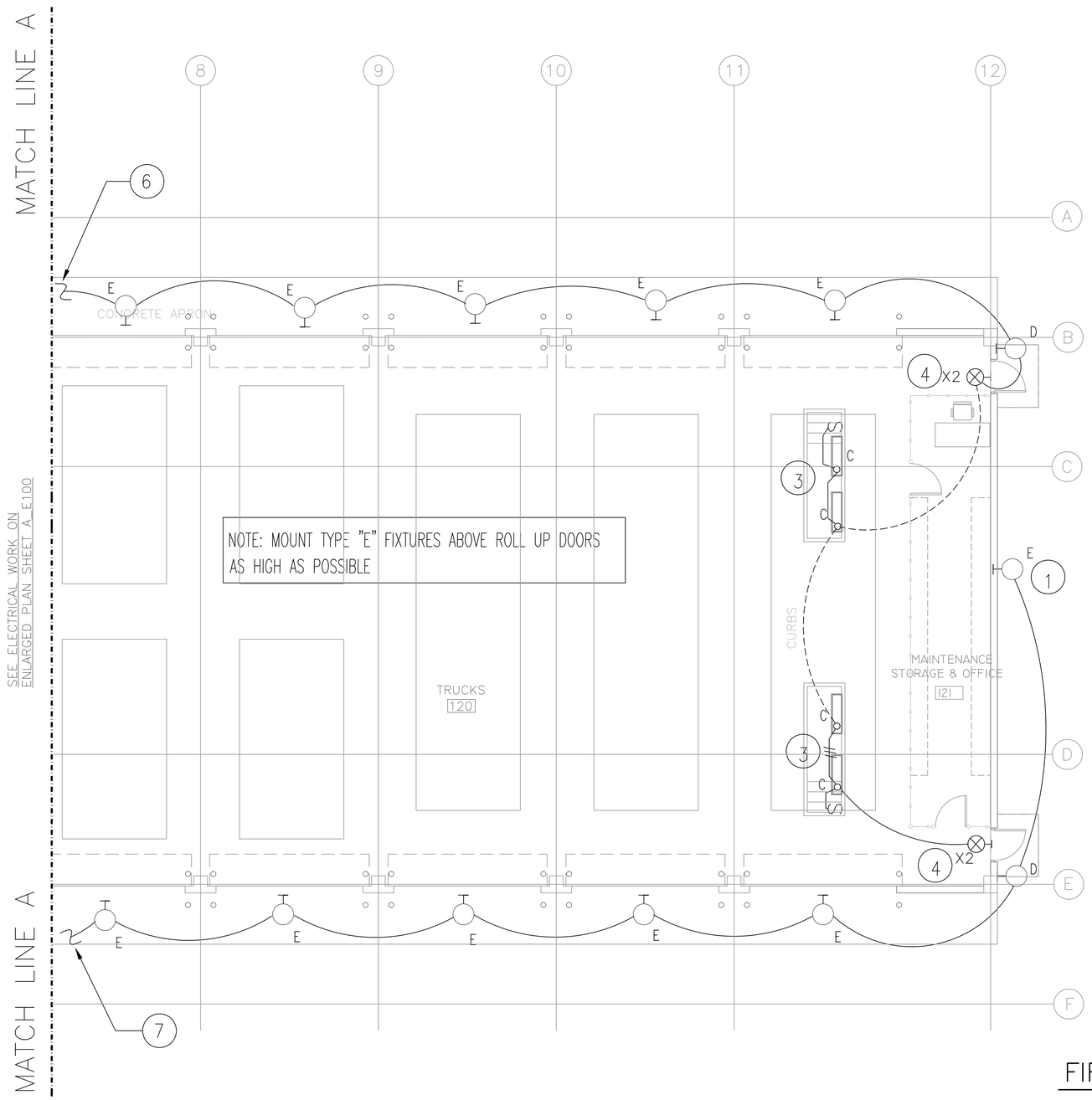

PLAN NOTES

1. MOUNT FIXTURE AS HIGH AS POSSIBLE.
2. NOT USED.
3. MOUNT LIGHT FIXTURES ON SIDE OF MAINTENANCE PIT WALL.
4. CONNECT EXIT LIGHTS UN-SWITCHED.
5. NOT USED.
6. SEE SHEET A_E100 FOR CONTINUATION TO LIGHTING CIRCUIT 'FS1-5'.
7. SEE SHEET A_E100 FOR CONTINUATION TO LIGHTING CIRCUIT 'FS1-7'.

FIRST FLOOR – LIGHTING PLAN II

SCALE : 1:75

PRELIMINARY - NOT FOR CONSTRUCTION

REV	DATE	BY	SUB	APP	DESCRIPTION

DESIGNED L. TAYLOR
DRAWN L. TAYLOR
CHECKED B. CRAWFORD
IN CHARGE D. WHEELER
DATE 5 DEC 2009

AFGHAN NATIONAL SECURITY FORCE
Comprehensive Plan for Facilities Development
MINISTRY OF INTERIOR (MoI) - AFGHAN NATIONAL POLICE
PROVINCIAL FIRE STATION - TYPE-B

First Floor - Lighting Plan II

SCALE AS SHOWN

PROJECT NO. 6151-08-0328

A_E101

J:\6151-08-0328 Afghanistan\Task 32.20 Fire Station B\Cad\A_E101 FIRST FLOOR LIGHTING PLAN.dwg 12/02/2009 3:42pm syeilliams

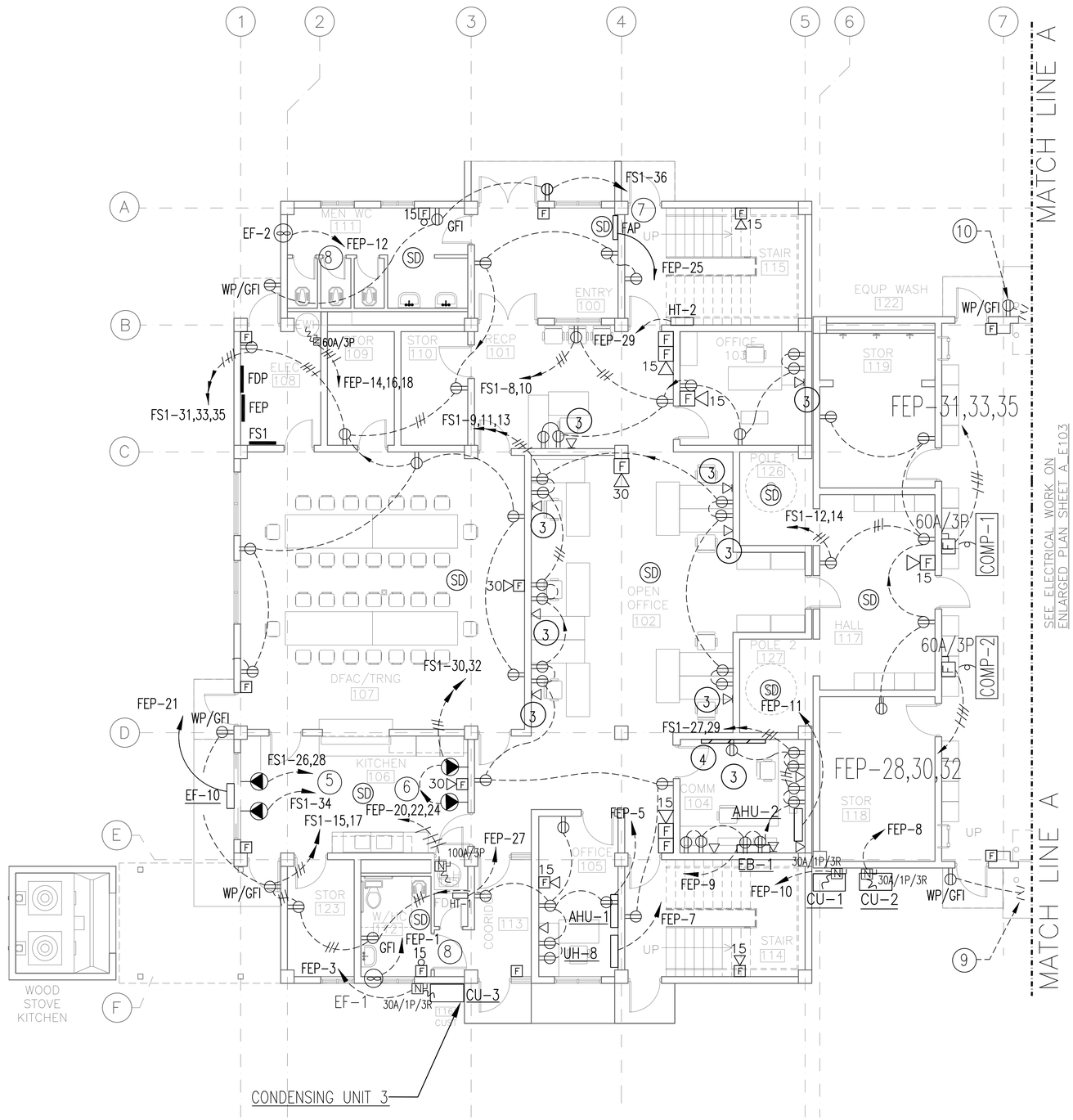

PLAN NOTES

1. NOT USED
2. NOT USED
3. GENERAL NOTE: ALL COMMUNICATIONS OUTLETS SHALL HAVE A 21MM CONDUIT ROUTED TO COMM ROOM 107 AND TERMINATED AT TOP OF BACKBOARD.
4. PROVIDE A 19MM X 1220MM X 1220MM PLYWOOD BACKBOARD PAINT WITH 2 COATS OF GRAY ENAMEL ON BOTH SIDES AND PROVIDE ANGLE IRON FRAMES AROUND BOARD. TERMINATE ALL COMMUNICATIONS CONDUITS AT THE TOP OF THIS BOARD AND LEAVE PULL CORDS IN ALL EMPTY CONDUITS.
5. PROVIDE RANGE OUTLETS TO MATCH EQUIPMENT PROVIDED. VERIFY PRIOR TO ROUGHING.
6. PROVIDE REFRIGERATOR OUTLETS TO MATCH EQUIPMENT PROVIDED. VERIFY PRIOR TO ROUGHING.
7. REFER TO SHEET A_E110 FOR FIRE ALARM RISERS.
8. PROVIDE TWO POLE LIGHT SWITCH AND WIRE FAN TO OPERATE WITH LIGHTS.
9. SEE SHEET A_E103 FOR CONTINUATION OF POWER CIRCUIT "FS1-25"
10. SEE SHEET A_E103 FOR CONTINUATION OF POWER CIRCUIT "FS1-20"

NOTE REFER TO MECHANICAL DRAWINGS FOR CONTROLS FOR ALL MECHANICAL EQUIPMENT.

FIRST FLOOR – POWER & MISC. PLAN I

SCALE: 1:75

PRELIMINARY - NOT FOR CONSTRUCTION

REV	DATE	BY	SUB	APP	DESCRIPTION

DESIGNED L. TAYLOR
DRAWN L. TAYLOR
CHECKED B. CRAWFORD
IN CHARGE D. WHEELER
DATE 5 DEC 2009

AFGHAN NATIONAL SECURITY FORCE
Comprehensive Plan for Facilities Development
MINISTRY OF INTERIOR (MoI) - AFGHAN NATIONAL POLICE
PROVINCIAL FIRE STATION - TYPE-B
First Floor - Power & Misc. Plan I

SCALE AS SHOWN

PROJECT NO. 6151-08-0328

A_E102

J:\6151-08-0328 Afghanistan\Task 32.20 Fire Station B\Cad\A_E102 FIRST FLOOR POWER AND MISC. PLAN.dwg 12/02/2009 3:14pm swilliams

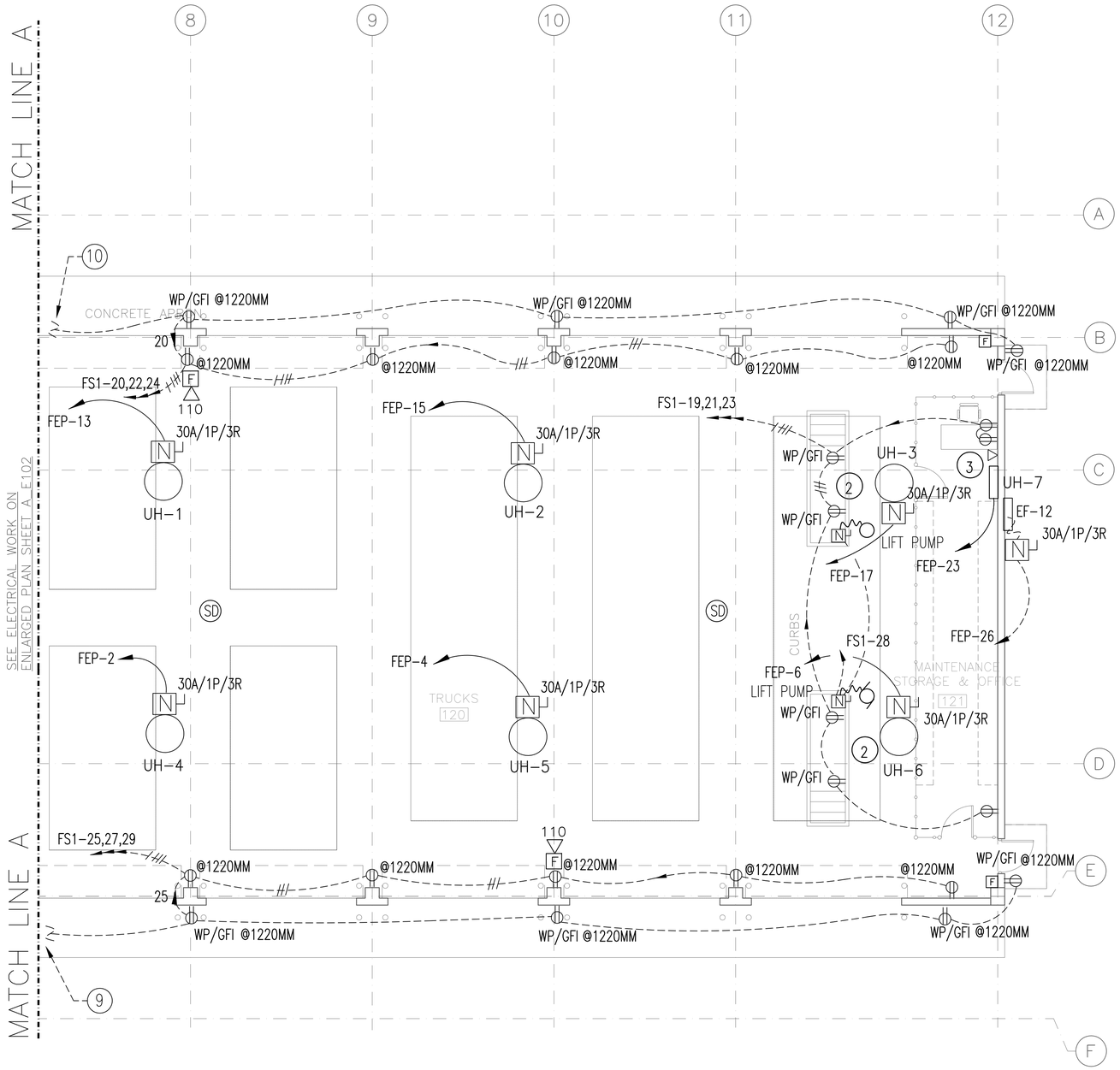

PLAN NOTES

1. NOT USED
2. MOUNT RECEPTACLES ON SIDE OF MAINTENANCE PIT WALL.
3. GENERAL NOTE: ALL COMMUNICATIONS OUTLETS SHALL HAVE A 21MM CONDUIT ROUTED TO COMM ROOM 107 AND TERMINATED AT TOP OF BACKBOARD.
4. NOT USED.
5. NOT USED.
6. NOT USED.
7. REFER TO SHEET A_E110 FOR FIRE ALARM RISERS.
8. NOT USED.
9. SEE SHEET A_E102 FOR CONTINUATION OF POWER CIRCUIT "FS1-25"
10. SEE SHEET A_E102 FOR CONTINUATION OF POWER CIRCUIT "FS1-20"

NOTE REFER TO MECHANICAL DRAWINGS FOR CONTROLS FOR ALL MECHANICAL EQUIPMENT.

FIRST FLOOR – POWER & MISC. PLAN II

SCALE: 1:75

PRELIMINARY - NOT FOR CONSTRUCTION

REV	DATE	BY	SUB	APP	DESCRIPTION

DESIGNED L. TAYLOR
DRAWN L. TAYLOR
CHECKED B. CRAWFORD
IN CHARGE D. WHEELER
DATE 5 DEC 2009

AFGHAN NATIONAL SECURITY FORCE
Comprehensive Plan for Facilities Development
MINISTRY OF INTERIOR (MoI) - AFGHAN NATIONAL POLICE
PROVINCIAL FIRE STATION - TYPE-B
First Floor - Power & Misc. Plan II

SCALE AS SHOWN
PROJECT NO. 6151-08-0328
A_E103

J:\6151-08-0328 Afghanistan\Task 32:20 Fire Station B\Cad\A_E103 FIRST FLOOR POWER AND MISC. PLAN.dwg 12/02/2009 3:46pm sywilliams

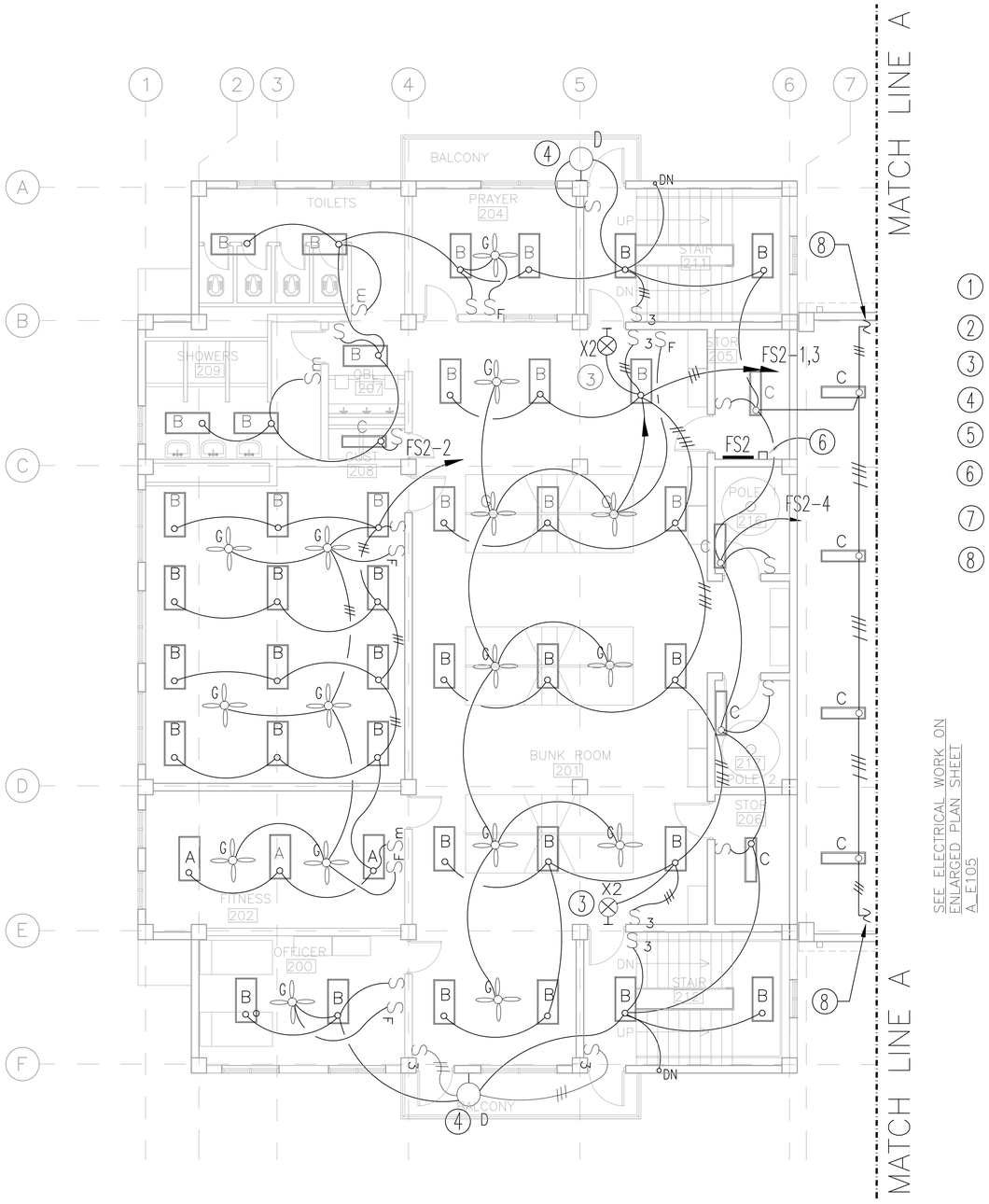

PLAN NOTES

1. NOT USED
2. NOT USED
3. CONNECT EXIT LIGHTS UNSWITCHED.
4. MOUNT TYPE "D" FIXTURE AT 1900MM AFF.
5. NOT USED
6. LIGHTING CONTACTOR FOR TRUCK BAY LIGHTING.
7. NOT USED
8. SEE SHEET A_E105 FOR CONTINUATION TO THREE WAY SWITCH

SECOND FLOOR – LIGHTING PLAN I

SCALE: 1:75

PRELIMINARY - NOT FOR CONSTRUCTION

REV	DATE	BY	SUB	APP	DESCRIPTION

DESIGNED L. TAYLOR
DRAWN L. TAYLOR
CHECKED B. CRAWFORD
IN CHARGE D. WHEELER
DATE 5 DEC 2009

AFGHAN NATIONAL SECURITY FORCE
Comprehensive Plan for Facilities Development

MINISTRY OF INTERIOR (MoI) - AFGHAN NATIONAL POLICE
PROVINCIAL FIRE STATION - TYPE-B

Second Floor - Lighting Plan I

SCALE AS SHOWN

PROJECT NO. 6151-08-0328

A_E104

J:\6151-08-0328 Afghanistan\Task 32.20 Fire Station B\Cad\A_E104 SECOND FLOOR LIGHTING PLAN.dwg 12/03/2009 5:13pm sywilliams

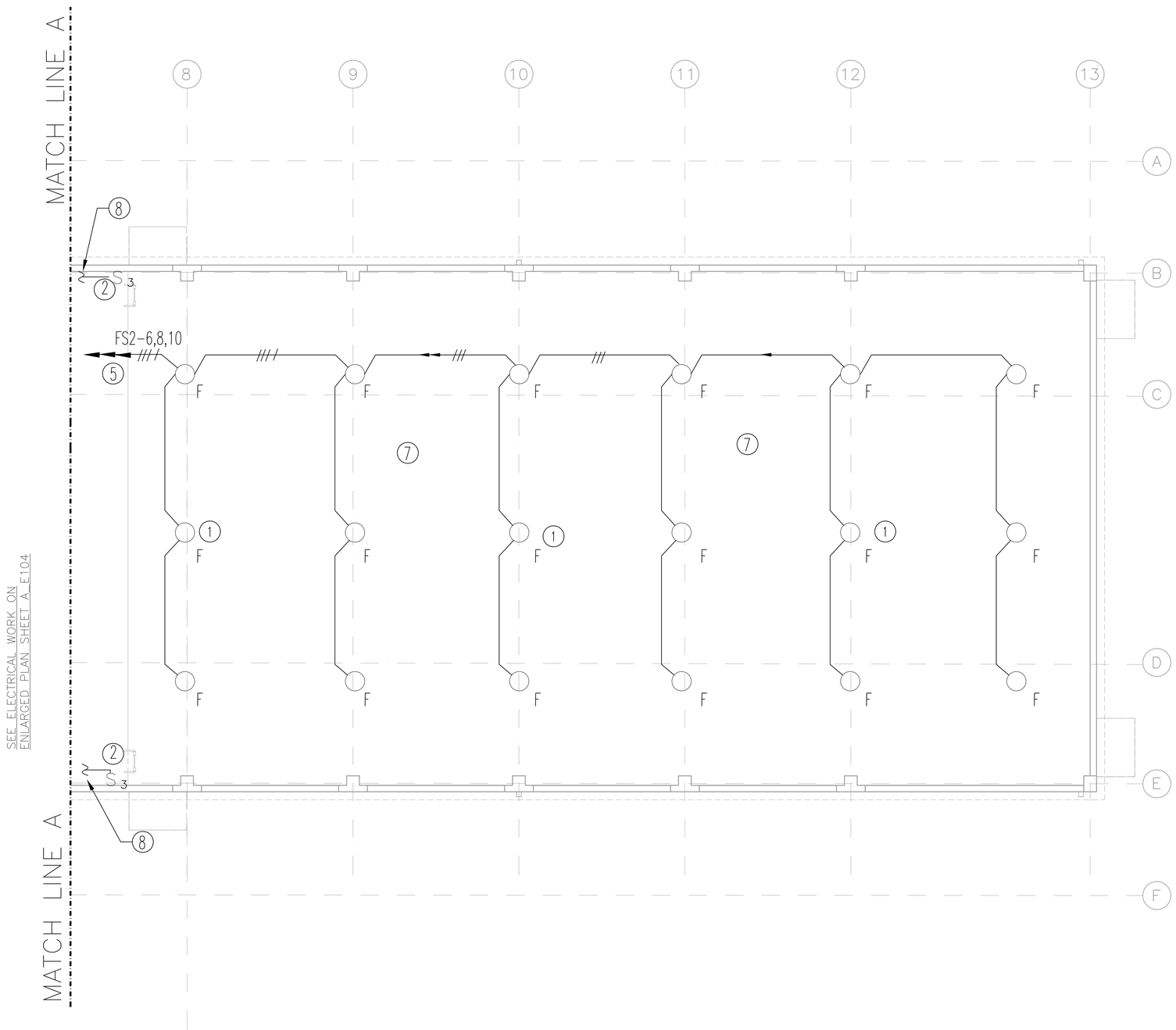

PLAN NOTES

1. PROVIDE 250 WATT QUARTZ RESTRIKE SYSTEM IN THIS FIXTURE.
2. MOUNT SWITCH FOR MEZZANINE LIGHTS AT TOP OF LADDER
3. NOT USED
4. NOT USED
5. WIRE THRU ELECTRICALLY ACTIVATED MECHANICALLY HELD LIGHTING CONTACTOR MOUNTED ADJACENT TO PANEL FS2.
6. NOT USED
7. MOUNT TYPE "F" FIXTURES TO BOTTOM OF STRUCTURE OR TO STEEL CHANNELS WELDED BETWEEN STRUCTURAL MEMBERS.
8. SEE SHEET A_E104 FOR CONTINUATION TO THREE WAY SWITCH

SECOND FLOOR – LIGHTING PLAN II

SCALE: 1:75

PRELIMINARY - NOT FOR CONSTRUCTION

REV	DATE	BY	SUB	APP	DESCRIPTION

DESIGNED L. TAYLOR
DRAWN L. TAYLOR
CHECKED B. CRAWFORD
IN CHARGE D. WHEELER
DATE 5 DEC 2009

AFGHAN NATIONAL SECURITY FORCE
Comprehensive Plan for Facilities Development
MINISTRY OF INTERIOR (MoI) - AFGHAN NATIONAL POLICE
PROVINCIAL FIRE STATION - TYPE-B
Second Floor - Lighting Plan II

SCALE AS SHOWN

PROJECT NO. 6151-08-0328

A_E105

J:\6151-08-0328 Afghanistan\Task 32.20 Fire Station B\Cad\A_E105 SECOND FLOOR LIGHTING PLAN.dwg 12/03/2009 5:18pm msestafonous

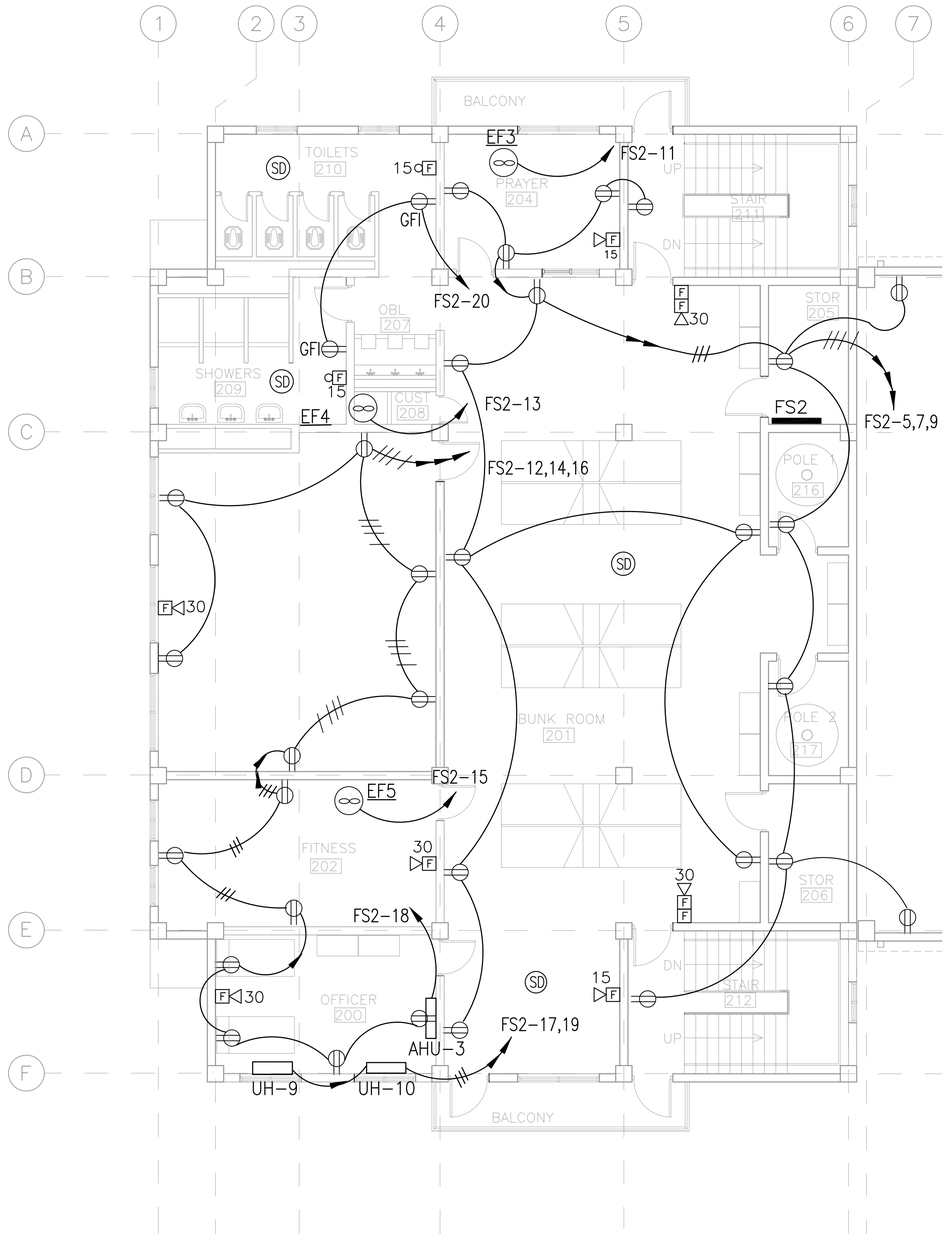

NOTE REFER TO MECHANICAL DRAWINGS FOR CONTROLS FOR ALL MECHANICAL EQUIPMENT.

SECOND FLOOR – POWER & MISC. PLAN

SCALE: 1:75

PRELIMINARY - NOT FOR CONSTRUCTION

REV	DATE	BY	SUB	APP	DESCRIPTION

DESIGNED L. TAYLOR
DRAWN L. TAYLOR
CHECKED B. CRAWFORD
IN CHARGE D. WHEELER
DATE 5 DEC 2009

AFGHAN NATIONAL SECURITY FORCE
Comprehensive Plan for Facilities Development
MINISTRY OF INTERIOR (MoI) - AFGHAN NATIONAL POLICE
PROVINCIAL FIRE STATION - TYPE-B

Second Floor - Power & Misc. Plan

SCALE AS SHOWN

PROJECT NO. 6151-08-0328

A_E106

J:\6151-08-0328 Afghanistan\Task 32.20 Fire Station B\Cad\A_E106 SECOND FLOOR POWER AND MISC. PLAN.dwg 12/03/2009 5:20pm msestafanous

PANEL FDP — TYPE MAIN BREAKER — K.A.I.C 22,000 MIN.
VOLTAGE 380/220V,3ø,4W — MAINS 600AMP — ENTRY BOTTOM

POLE	TRIP	CONDUCTORS IN MM2	CONDUIT	DESIGNATION	KVA	NO	PHASE ØA	PHASE ØB	PHASE ØC	NO	KVA	DESIGNATION	CONDUIT	CONDUCTORS IN MM2	TRIP	POLE
3	200A	4#95+#16GND	53 MM	PANEL FS1	20.1	1	28.6			2	8.5	PANEL FS2	35 MM	4#50+#10GND	100A	3
					18.2	3		25.5		4	7.3					
					12.8	5			19.6	6	6.8					
3	400A	4#240+#3GND	103 MM	PANEL FEP	42.9	7	42.9			8		FUTURE WAREHOUSE			100A	3
					42.8	9		42.8		10						
					35.8	11			35.8	12						
3	30A	4#6+#6GND	21 MM	TVSS		13				14		SPACE				3
						15				16						
						17				18						
						19				20						
						21				22						
						23				24						
						25				26						
						27				28						
						29				30						
						31				32						
						33				34						
						35				36						
						37				38						
						39				40						
						41				42						
					TOTAL:		71.5	68.3	55.4	195.2 KVA /.66 X 1.25 = 369.6X1.2=443 AMPS USE 600 AMP PANEL						

LIGHTING FIXTURE SCHEDULE

MARK	LAMPS	VOLTAGE	FIXTURE DESCRIPTION	MOUNTING	NOTES
A	3-T832W	220	SURFACE ACRYLIC LENS FLUORESCENT WRAPAROUND	SURFCE	2X4
B	2-T832W	220	SURFACE ACRYLIC LENS FLUORESCENT WRAPAROUND	SURFACE	2X4
C	2-T832W	220	SURFACE MOUNTED FLUORESCENT STRIP FIXTURE	SURFACE	STRIP
D	1-42 DTT	220	BRACKET MOUNTED FLUORESCENT SECURITY FIXTURE WITH ACRYLIC LENS	BRACKET	DAMP LOCATION
E	1-250MH	220	BRACKET MOUNTED HID AREA SECURITY LIGHT	BRACKET AS HIGH AS POSSIBLE	
F	1 250MH	220	INDUSTRIAL HIGH BAY ACRYLIC ENCLOSED HID FIXTURE	SUSPENDED	
G	N/A	220	CEILING FAN PROVIDED BY MECH. INSTALLED BY ELECTRICAL	SURFACE	PROVIDE FAN CONTROL SWITCH
X2	LED	220	LED UNIVERSAL MOUNTED EXIT LIGHT. POLYCARBONATE HOUSING.	UNIVERSAL	CONNECT UNSWITCHED

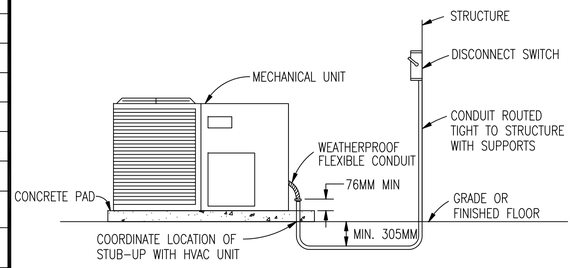

HVAC UNIT CONNECTION DETAIL
SCALE: NONE

PANEL FS1 — TYPE MAIN LUGS ONLY — K.A.I.C 18,000 MIN.
VOLTAGE 380/220V,3ø,4W — MAINS 200 AMP — ENTRY BOTTOM

POLE	TRIP	CONDUCTORS IN MM2	CONDUIT	DESIGNATION	KVA	NO	PHASE OA	PHASE OB	PHASE OC	NO	KVA	DESIGNATION	CONDUIT	CONDUCTORS IN MM2	TRIP	POLE
1	20A	2#4+#4 GND	21MM	LIGHTING	1.9	1	3.3			2	1.4	LIGHTING	21MM	2#4+#4 GND	20A	1
1	20A	2#4+#4 GND	21MM	LIGHTING	2.0	3		4.6		4	2.6	LIGHTING	21MM	2#4+#4 GND	20A	1
1	20A	2#4+#4 GND	21MM	LIGHTING	2.0	5			4.2	6	2.2	LIGHTING	21MM	2#4+#4 GND	20A	1
1	20A	2#4+#4 GND	21MM	LIGHTING	2.0	7	2.8			8	.8	RECEPTACLES	21MM	2#4+#4 GND	20A	1
1	20A	2#4+#4 GND	21MM	RECEPTACLES	.8	9		1.6		10	.8	RECEPTACLES	21MM	2#4+#4 GND	20A	1
1	20A	2#4+#4 GND	21MM	RECEPTACLES	.8	11			1.8	12	1.0	RECEPTACLES	21MM	2#4+#4 GND	20A	1
1	20A	2#4+#4 GND	21MM	RECEPTACLES	1.0	13	1.6			14	.6	RECEPTACLES	21MM	2#4+#4 GND	20A	1
1	20A	2#4+#4 GND	21MM	RECEPTACLES(NOTE 3)	.8	15		1.8		16	1.0	RECEPTACLES	21MM	2#4+#4 GND	20A	1
1	20A	2#4+#4 GND	21MM	RECEPTACLES	1.0	17			1.8	18	.8	RECEPTACLES	21MM	2#4+#4 GND	20A	1
1	20A	2#4+#4 GND	21MM	RECEPTACLES	.4	19	1.0			20	.6	RECEPTACLES	21MM	2#4+#4 GND	20A	1
1	20A	2#4+#4 GND	21MM	RECEPTACLES	.6	21		1.0		22	.4	RECEPTACLES	21MM	2#4+#4 GND	20A	1
1	20A	2#4+#4 GND	21MM	RECEPTACLES	.8	23			1.2	24	.4	RECEPTACLES(NOTE 3)	21MM	2#4+#4 GND	20A	1
1	20A	2#4+#4 GND	21MM	RECEPTACLES	.6	25	8.6			26	8.0	RANGE (NOTE 1)	27MM	2#16+#6 GND	50A	1
1	20A	2#4+#4 GND	21MM	RECEPTACLES	.4	27		.4		28	.4	LIFT PUMP	21MM	2#4+#4 GND	20A	1
1	20A	2#4+#4 GND	21MM	RECEPTACLES(NOTE 3)	.6	29			2.6	30	2.0	REFRIGERATOR	21MM	2#4+#4GND	20A	1
1	20A	2#4+#4 GND	21MM	RECEPTACLES	.8	31	2.8			32	2.0	REFRIGERATOR	21MM	2#4+#4GND	20A	1
1	20A	2#4+#4 GND	21MM	RECEPTACLES	.8	33		.8		34	8.0	RANGE (NOTE 1)	27MM	2#16+#6 GND	50A	1
1	20A	2#4+#4 GND	21MM	RECEPTACLES	1.2	35			1.2	36	.4	RECEPTACLES(NOTE 3)	21MM	2#4+#4GND	20A	1
1	20A			SPARE		37				38		SPARE			20A	1
1	20A			SPARE		39				40		SPARE			20A	1
1	20A			SPARE		41				42		SPARE			20A	1
					TOTAL:		20.1	18.2	12.8	51.1 KVA /.66 X 1.25 = 96.7 AMPS X1.2=116A USE 200 AMP PANEL						

PANEL FEP — TYPE MAIN LUGS ONLY — K.A.I.C 18,000 MIN.
VOLTAGE 380/220V,3ø,4W — MAINS 400 AMP — ENTRY BOTTOM

POLE	TRIP	CONDUCTOR	CONDUIT	DESIGNATION	KVA	NO	PHASE OA	PHASE ØB	PHASE OC	NO	KVA	DESIGNATION	CONDUIT	CONDUCTORS IN MM2	TRIP	POLE
1	20A	2#4+#4 GND	21MM	EF-1	.6	1	5.6			2	5.0	UH-4	21MM	2#6+#6 GND	30A	1
1	20A	2#4+#4 GND	21MM	CU-3	2.6	3		7.6		4	5.0	UH-5	21MM	2#6+#6 GND	30A	1
1	20A	2#4+#4 GND	21MM	AHU-1	.6	5			5.6	6	5.0	UH-6	21MM	2#10+#6 GND	30A	1
1	20A	2#4+#4 GND	21MM	UH-8	.6	7	5.3			8	2.6	CU-2	21MM	2#4+#4 GND	20A	1
1	20A	2#4+#4 GND	21MM	EB-1	.6	9		3.2		10	2.6	CU-1	21MM	2#4+#4 GND	20A	1
1	20A	2#4+#4 GND	21MM	AHU-2	.6	11			1.2	12	.6	EF-1	21MM	2#4+#4 GND	20A	1
1	30A	2#6+#6 GND	27MM	UH-1	5.0	13	13			14	8	WATER HEATER	27MM	4#16+#6 GND	50A	3
1	30A	2#6+#6 GND	27MM	UH-2	5.0	15		13		16	8					
1	30A	2#6+#6 GND	27MM	UH-3	5.0	17			13	18	8					
1	30A	2#6+#6 GND	21MM	WOOD STOVE KITCHEN	3.0	19	15			20	12	WATER HEATER	35MM	4#25+#10 GND	70A	3
1	20A	2#4+#4 GND	21MM	FAN EF-10	.4	21		15		22	12					
1	20A	2#4+#4 GND	21MM	UH-7	.6	23			12	24	12					
1	20A	2#4+#4 GND	21MM	FIRE ALARM PANEL(NOTE 2)	.3	25	.3			26	.6	PIT FANS	21MM	2#4+#4 GND	20A	1
1	30A	2#6+#6GND	21MM	HEAT TRACE SYSTEM	2.7	27		9.2		28	6.5	AIR COMPRESSOR	21MM	4#10+#6 GND	40A	3
1	30A	2#6+#6 GND	21MM	HEAT TRACE SYSTEM	2.7	29			9.2	30	6.5					
3	40A	4#10+#6 GND	21MM	AIR COMPRESSOR	6.5	31	13			32	6.5					
					6.5	33		6.5		34		SPARE			20A	1
					6.5	35			6.5	36		SPARE			20A	1
1	20A			SPARE		37				38		SPARE			20A	1
1	20A			SPARE		39				40		SPARE			20A	1
1	20A			SPARE		41				42		SPARE			20A	1
					TOTAL:		51.9	54.6	47.5	154 KVA /.66 X 1.25 = 292 AMPS X1.2= 351A USE 400 AMP PANEL						

PANEL FS2 — TYPE MAIN LUGS ONLY — K.A.I.C 18,000 MIN.
VOLTAGE 380/220V,3ø,4W — MAINS 100 AMP — ENTRY BOTTOM

POLE	TRIP	CONDUCTORS IN MM2	CONDUIT	DESIGNATION	KVA	NO	PHASE OA	PHASE ØB	PHASE OC	NO	KVA	DESIGNATION	CONDUIT	CONDUCTORS IN MM2	TRIP	POLE
1	20A	2#4+#4 GND	21MM	LIGHTING	.7	1	2.8			2	2.1	LIGHTING	21MM	2#4+#4 GND	20A	1
1	20A	2#4+#4 GND	21MM	CEILING FANS	1.6	3		3.3		4	1.7	LIGHTING	21MM	2#4+#4 GND	20A	1
1	20A	2#4+#4 GND	21MM	RECEPTACLES	1.4	5			3.2	6	1.8	LIGHTING	21MM	2#4+#4 GND	20A	1
1	20A	2#4+#4 GND	21MM	RECEPTACLES	1.4	7	3.2			8	1.8	LIGHTING	21MM	2#4+#4 GND	20A	1
1	20A	2#4+#4 GND	21MM	RECEPTACLES	1.0	9		2.8		10	1.8	LIGHTING	21MM	2#4+#4 GND	20A	1
1	20A	2#4+#4 GND	21MM	EF-3	.3	11			1.5	12	1.2	RECEPTACLES	21MM	2#4+#4 GND	20A	1
1	20A	2#4+#4 GND	21MM	EF-4	.4	13	1.0			14	.6	RECEPTACLES	21MM	2#4+#4 GND	20A	1
1	20A	2#4+#4 GND	21MM	EF-5	.4	15		1.2		16	.8	RECEPTACLES	21MM	2#4+#4 GND	20A	1
1	20A	2#4+#4 GND	21MM	UH-9	1.5	17			2.1	18	.6	AHU-3	21MM	2#4+#4 GND	20A	1
1	20A	2#4+#4 GND	21MM	UH-10	1.5	19	1.5			20	.6	RECEPTACLES(NOTE 3)	21MM	2#4+#4 GND	20A	1
1	20A			SPARE		21				22		SPARE			20A	1
1	20A			SPARE		23				24		SPARE			20A	1
1	20A			SPARE		25				26		SPARE			20A	1
1	20A			SPARE		27				28		SPARE			20A	1
1	20A			SPARE		29				30		SPARE			20A	1
1	20A			SPARE		31				32		SPARE			20A	1
1	20A			SPARE		33				34		SPARE			20A	1
1	20A			SPARE		35				36		SPARE			20A	1
1	20A			SPARE		37				38		SPARE			20A	1
1	20A			SPARE		39				40		SPARE			20A	1
1	20A			SPARE		41				42		SPARE			20A	1
					TOTAL:		8.5	7.3	6.8	22.6 KVA /.66 X 1.25 = 42.8 AMPS X1.2= 51.3A USE 100 AMP PANEL						

NOTE 1
SHUNT TRIP TYPE BREAKER. TIE SHUNT TRIP BREAKER INTO HOOD EXTINGUISHING SYSTEM SUCH THAT WHEN HOOD SYSTEM ACTIVATES POWER WILL BE TERMINATED TO RANGE.

NOTE 2
PROVIDE LOCKING TYPE BREAKER FOR FIRE ALARM

NOTE 3
PROVIDE GFI TYPE CIRCUIT BREAKER.

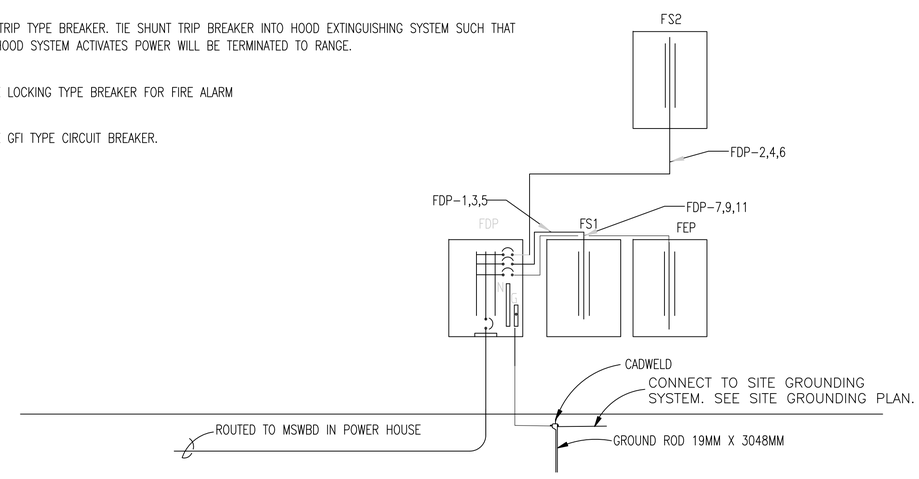

POWER RISER DIAGRAM
SCALE: NONE

PRELIMINARY - NOT FOR CONSTRUCTION

DESIGNED L. TAYLOR
DRAWN L. TAYLOR
CHECKED B. CRAWFORD
IN CHARGE D. WHEELER
DATE 5 DEC 2009

REV DATE BY SUB APP
DESCRIPTION

AFGHAN NATIONAL SECURITY FORCE
Comprehensive Plan for Facilities Development
MINISTRY OF INTERIOR (MoI) - AFGHAN NATIONAL POLICE
PROVINCIAL FIRE STATION - TYPE-B
Electrical Schedules & Details

SCALE AS SHOWN
PROJECT NO. 6151-08-0328
A_E107

J:\6151-08-0328 Afghanistan\Task 32.20 Fire Station B\Cad\A_E107 ELECTRICAL SCHEDULES.dwg 12/03/2009 2:56pm syalliams

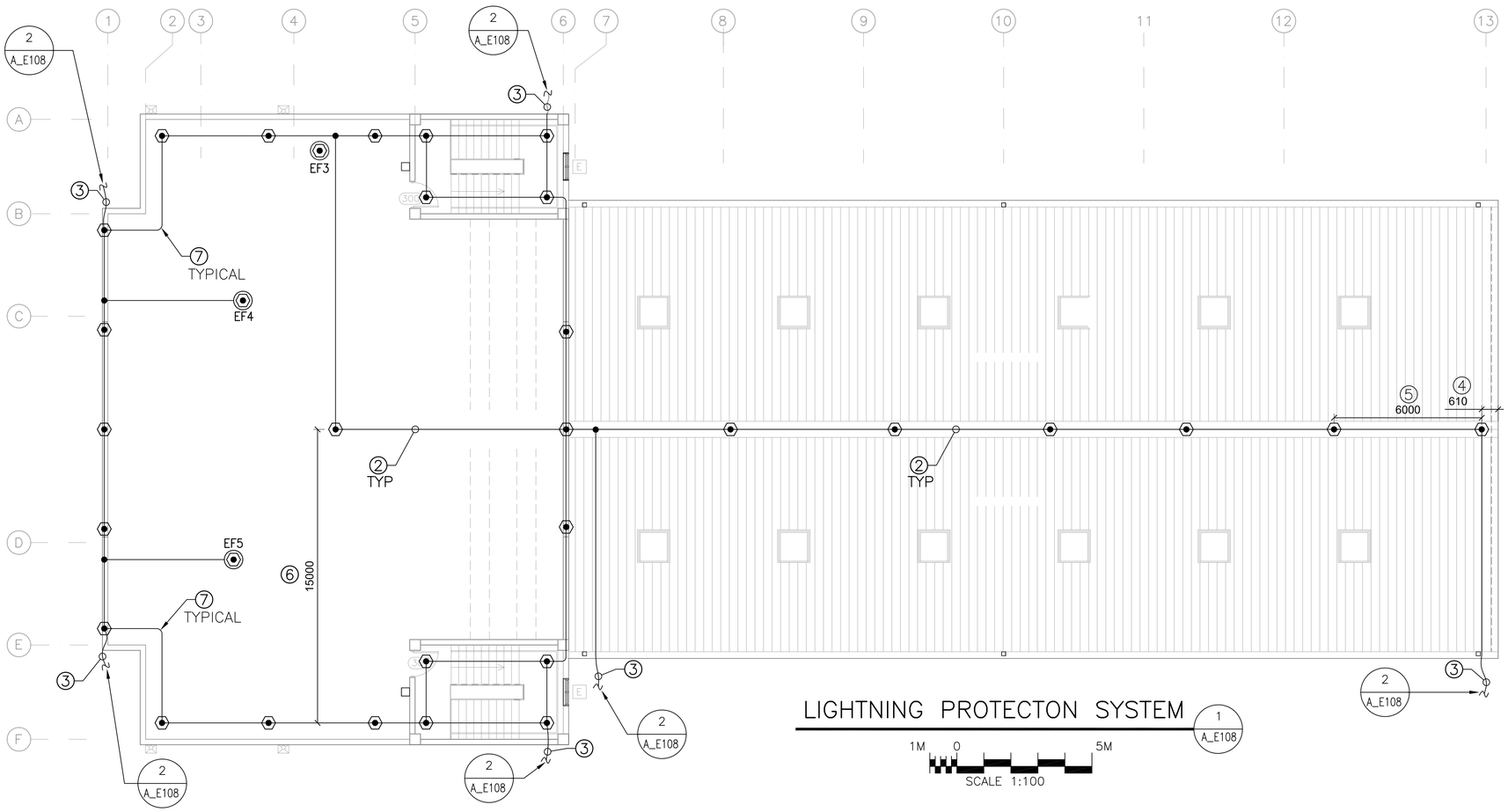

LIGHTNING PROTECTON SYSTEM

1 A_E108

1M 0 5M

SCALE 1:100

GENERAL NOTES:

1. SEE SHEET A_E000 FOR LEGEND, ABBREVIATIONS AND GENERAL NOTES.
2. SEE SITE GROUNDING PLAN FOR BONDING THE LIGHTNING PROTECTION SYSTEM TO THE GROUNDING ELECTRODE SYSTEM
3. CLASS I COMPONENTS SHALL APPLY FOR THE FIRE STATION BUILDING, HEIGHT IS NOT MORE THAN 23M (75 FEET).
4. ALL LIGHTNING PROTECTION CONDUCTORS SHALL BE FASTENED NOT MORE THAN 914.4MM (3 FEET) MAXIMUM SPACING.
5. CONDUCTORS SHALL INTERCONNECT ALL AIR TERMINALS AND SHALL FORM A TWO–WAY PATH FROM EACH AIR TERMINAL HORIZONTALLY OR DOWNWARD TO CONNECTORS WITH GROUND RODS.
6. THE INSTALLATION OF THE LIGHTNING PROTECTION SYSTEM SHALL MEET THE REQUIREMENTS OF NATIONAL FIRE PROTECTION ASSOCIATION 780 AND UNDER WRITERS LAB UL96/96A.
7. AIR TERMINALS SHALL NOT BE LESS THAN 254MM (10 INCHES)LONG ABOVE THE OBJECT TO BE PROTECTED WHEN THE INTERVAL BETWEEN AIR TERMINALS IS NOT MORE THAN 6M (20 FEET).
8. AIR TERMINALS SHALL BE PLACED ON ALL CHIMNEYS, VENTS, AND ROOF TOP METAL BODIES WHEN SUCH CHIMNEYS, VENTS OR ROOF TOP METAL BODIES ARE NOT WITHIN A ZONE OF PROTECTION.
9. PROVIDE EIGHT DOWN CONDUCTORS FOR THE BUILDING.
10. ALL BELOW GRADE BONDS SHALL BE EXOTHERMIC WELDS.

KEY NOTES:

1. AIR TERMINAL SHALL BE 12.7MMX457MM (1/2" X 18") ALUMINUM, 90 DEGREES VERTICAL.
2. MAIN CONDUCTORS SHALL BE #A28 OR EQUIVALENT (28 STRAND 14 GAUGE CLASS I ALUMINUM ROOF CABLE, 58.9 KG/304.8M (130POUNDS/1000 FEET), 15.875 MM DIAMETER, 70MM² (#1/0AWG)
3. #A28 ALUMINUM DOWN CONDUCTORS SHALL BE BONDED TO #70MM², 19 STRANDS COPPER DOWN CONDUCTOR AT LEAST 457MM (18 INCHES) ABOVE GRADE LEVEL. BIMETALLIC CONNECTORS WILL BE USED.
4. 610MM (2 FEET) MAXIMUM SPACING FROM RIDGE END.
5. 6000MM (20 FEET) MAXIMUM SPACING FOR 254MM (10 INCHES) AIR TERMINAL HEIGHT.
6. 15000MM (50 FEET) MAXIMUM SPACING BETWEEN AIR TERMINALS.
7. RADIUS OF BEND SHALL NOT BE LESS THAN 203MM (8 INCHES).

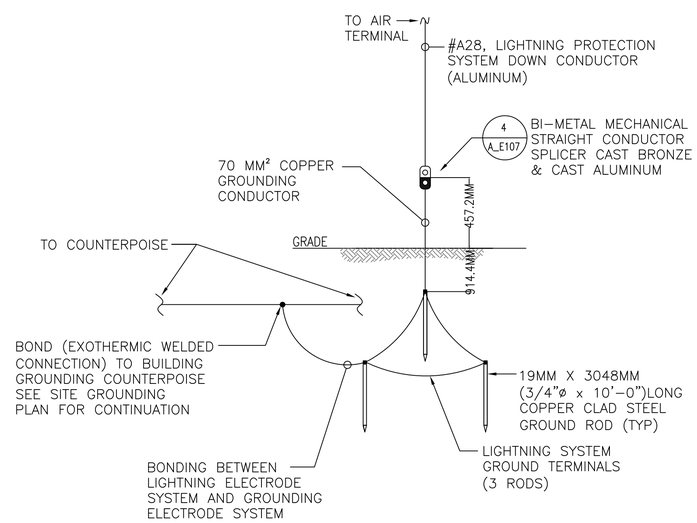

NOTE:
LIGHTNING PROTECTION SYSTEM SHALL BE BONDED TO THE GROUNDING COUNTERPOISE FOR THE FIRE STATION BUILDING SHOWN ON THE SITE GROUNDING PLAN (SHEET Site_E101) VIA EIGHT DOWN CONDUCTORS.

BONDING LIGHTNING PROTECTION TO GROUNDING ELECTRODE SYSTEM

2 A_E108

NOT TO SCALE

PRELIMINARY - NOT FOR CONSTRUCTION

REV	DATE	BY	SUB	APP	DESCRIPTION

DESIGNED M. ESTAFANOUS
DRAWN M. ESTAFANOUS
CHECKED B. CRAWFORD
IN CHARGE D. WHEELER
DATE 5 DEC 2009

AFGHAN NATIONAL SECURITY FORCE
Comprehensive Plan for Facilities Development
MINISTRY OF INTERIOR (MoI) - AFGHAN NATIONAL POLICE
PROVINCIAL FIRE STATION - TYPE-B

Lightning Protection System

SCALE AS SHOWN

PROJECT NO. 6151–08–0328

A_E108

J:\6151–08–0328 Afghanistan\Task 32.20 Fire Station B\Cad\A_E108 Lightning Protection System.dwg 12/03/2009 5:21pm mseistafanous

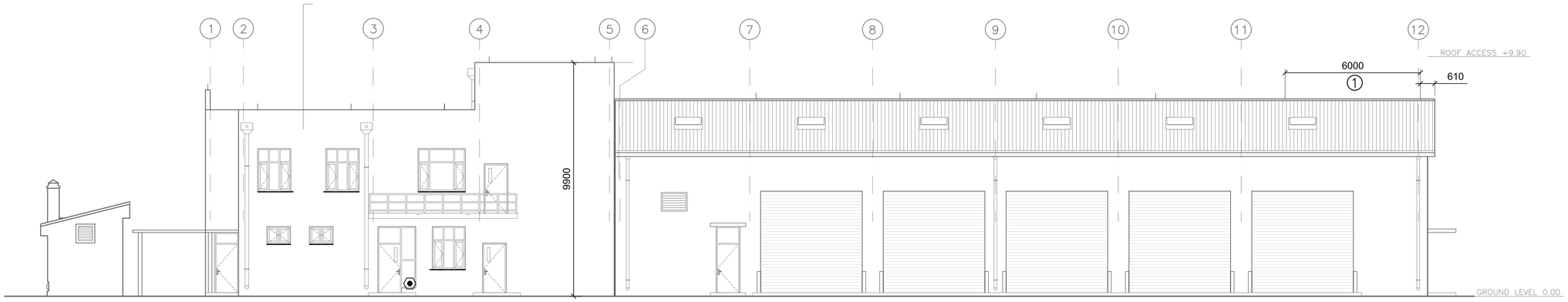

LIGHTNING PROTECTION SYSTEM – ELEVATIONS (1 / A_E109)

1M 0 5M
SCALE 1:100

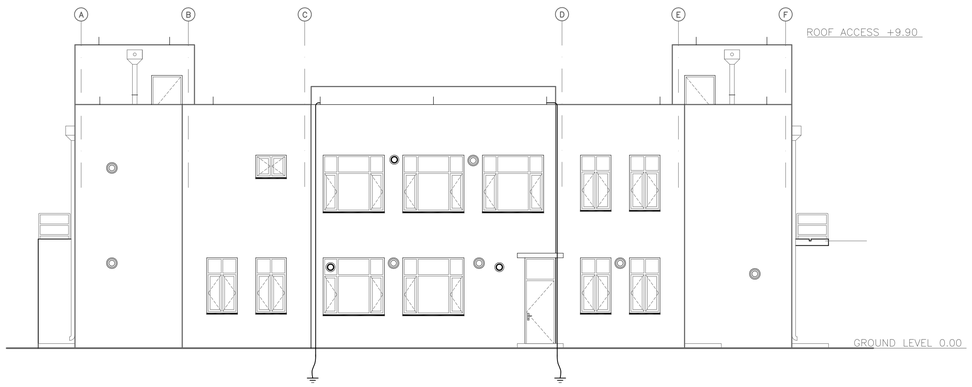

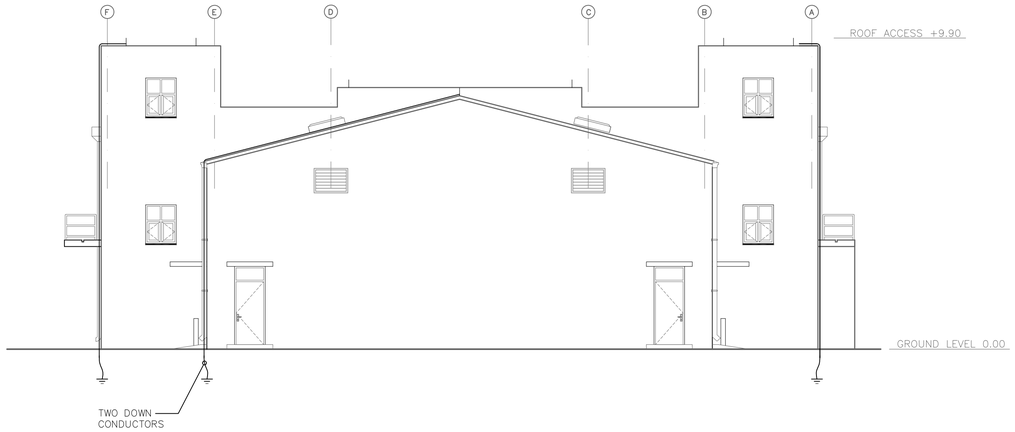

LIGHTNING PROTECTION SYSTEM – ELEVATIONS (2 / A_E109)

1M 0 5M
SCALE 1:100

PRELIMINARY - NOT FOR CONSTRUCTION

REV	DATE	BY	SUB	APP	DESCRIPTION

DESIGNED M. ESTAFANOUS
DRAWN M. ESTAFANOUS
CHECKED B. CRAWFORD
IN CHARGE D. WHEELER
DATE 5 DEC 2009

AFGHAN NATIONAL SECURITY FORCE
Comprehensive Plan for Facilities Development

MINISTRY OF INTERIOR (MoI) - AFGHAN NATIONAL POLICE
PROVINCIAL FIRE STATION - TYPE-B

Lightning Protection System
Elevations

SCALE
AS SHOWN

PROJECT NO.
6151-08-0328

A_E109

J:\6151-08-0328 Afghanistan\Task 32.20 Fire Station B\Cad\A_E109 Lightning Protection System - Elevations.dwg 12/03/2009 5:22pm msestafanous

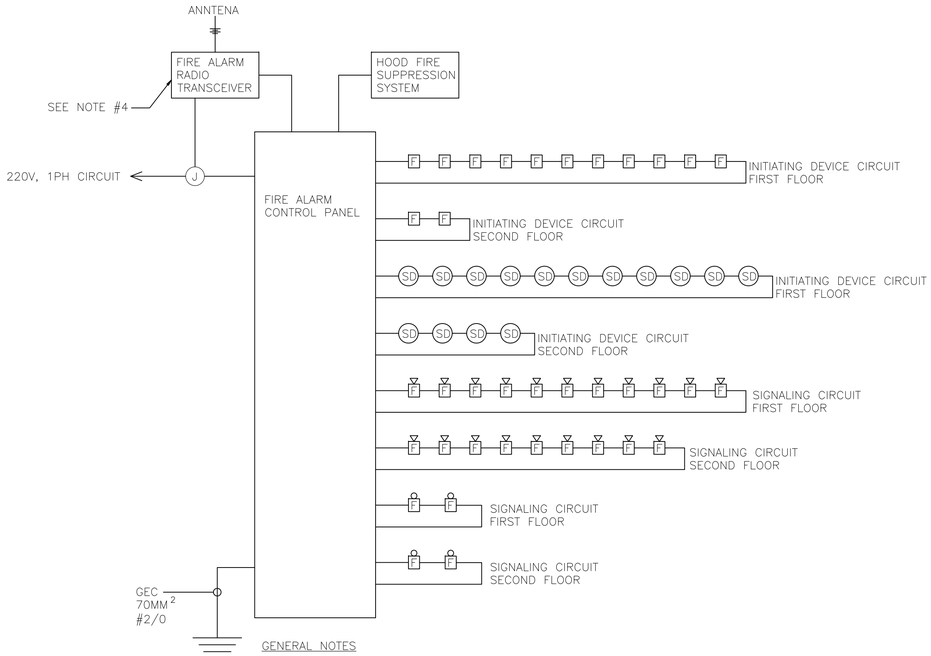

GENERAL NOTES

1. ALL FIRE ALARM CABLING SHALL BE INSTALLED IN MINIMUM 21MM (3/4") CONDUIT.
2. RISER DIAGRAM DOES NOT SHOW ALL WIRING AND CONNECTION AND IS ONLY INTENDED TO INDICATE FUNCTIONALITY REQUIRED. ALL DEVICES SHALL BE INSTALLED IN A LOOP CONFIGURATION . NO T-TAP SHALL BE ALLOWED.
3. CONTRACTOR SHALL PROVIDE END-TO-END CONNECTIVITY TEST FOR FIRE ALARM CONDUCTORS.
4. TO BE DETERMINED FOR EACH SITE LOCATION.

FIRE ALARM RISER DIAGRAM

1 / A_E110

SCALE: NONE

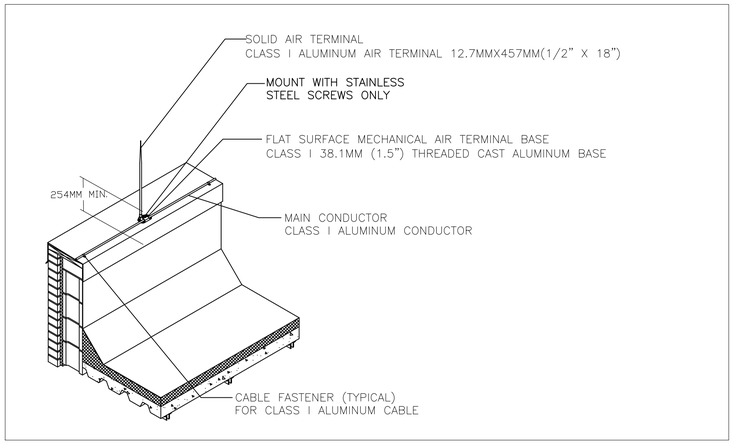

AIR TERMINAL DETAIL

2 / A_E110

SCALE: NONE

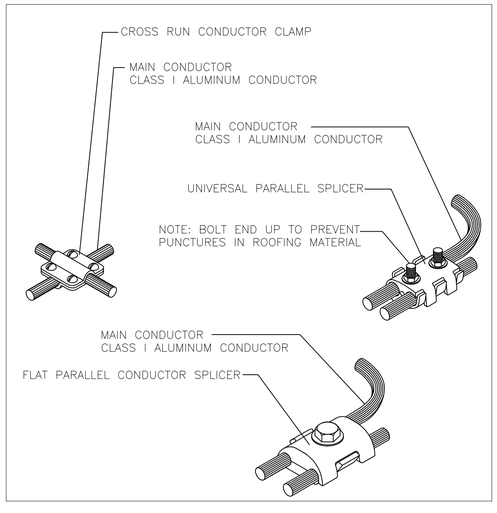

CABLE CLAMPS & SPLICERS

3 / A_E110

SCALE: NONE

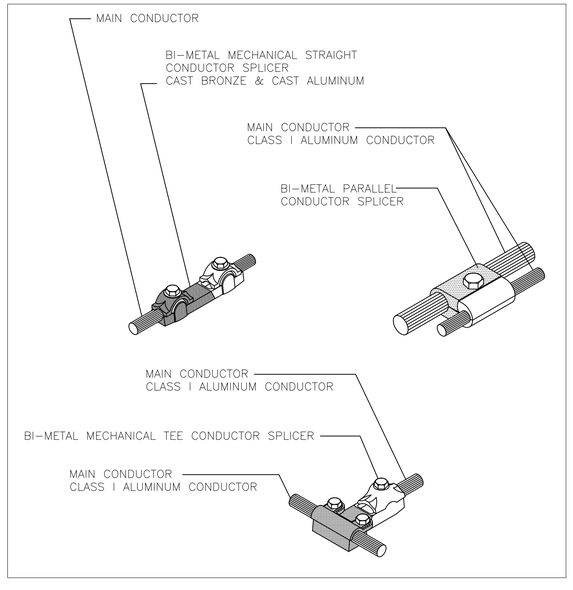

CABLE CLAMPS & SPLICERS

4 / A_E110

SCALE: NONE

PRELIMINARY - NOT FOR CONSTRUCTION

REV	DATE	BY	SUB	APP	DESCRIPTION

DESIGNED W. ESTAFANOUS
DRAWN W. ESTAFANOUS
CHECKED B. CRAWFORD
IN CHARGE D. WHEELER
DATE 5 DEC 2009

AFGHAN NATIONAL SECURITY FORCE
Comprehensive Plan for Facilities Development

MINISTRY OF INTERIOR (MoI) - AFGHAN NATIONAL POLICE
PROVINCIAL FIRE STATION - TYPE-B

Risers & Details

SCALE
AS SHOWN

PROJECT NO.
6151-08-0328

A_E110

J:\6151-08-0328 Afghanistan\Task 32.20 Fire Station B\Cad\A_E110 Risers & Details.dwg 12/03/2009 5:23pm mseatafanous

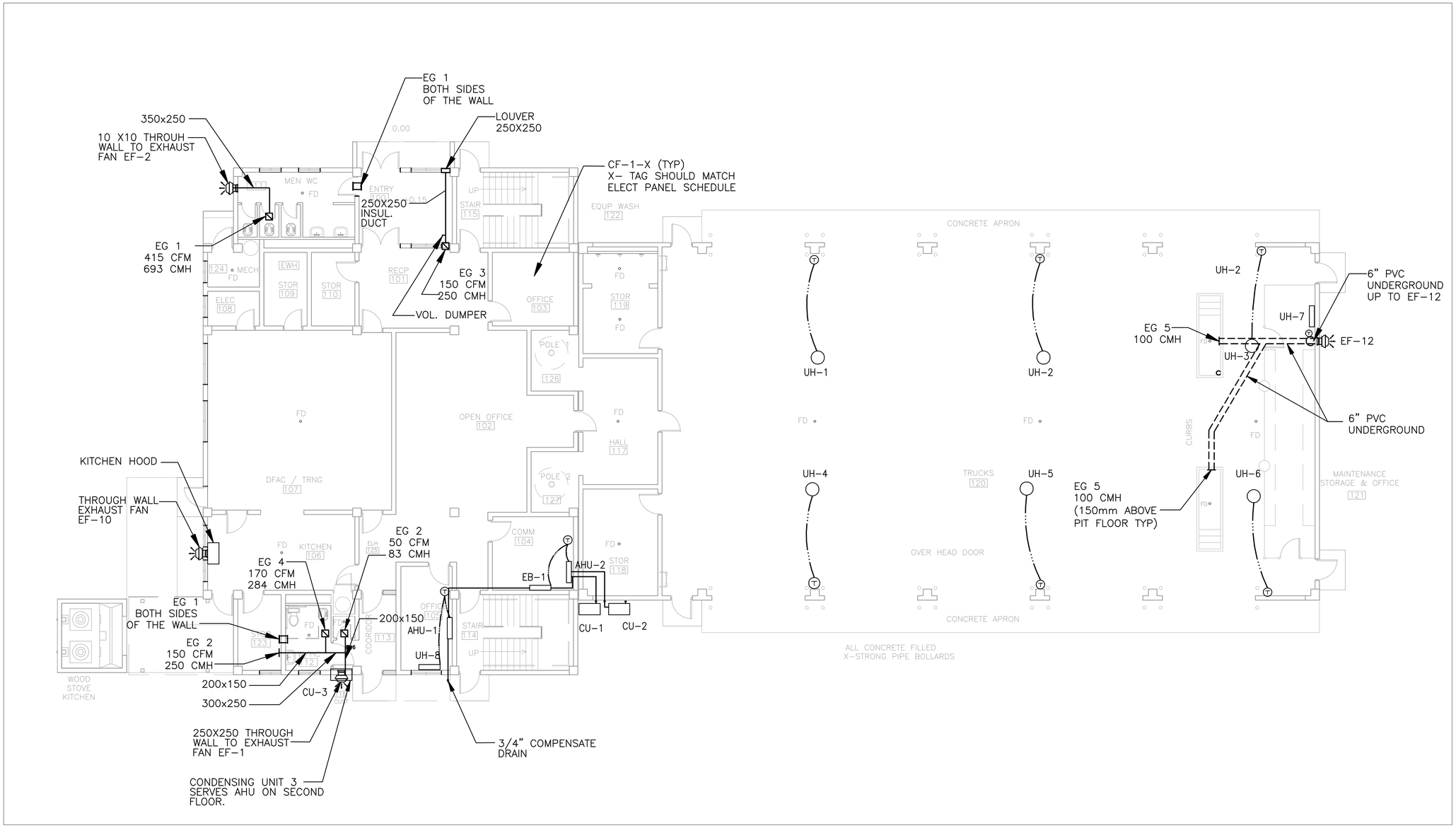

FIRST FLOOR PLAN (1 / A_M101)

2M 0 10M

SCALE 1:100

PRELIMINARY - NOT FOR CONSTRUCTION

REV	DATE	BY	SUB	APP	DESCRIPTION

DESIGNED
DRAWN
CHECKED
IN CHARGE D. WHEELER
DATE 5 DEC 2009

AFGHAN NATIONAL SECURITY FORCE
Comprehensive Plan for Facilities Development

MINISTRY OF INTERIOR (MoI) - AFGHAN NATIONAL POLICE
PROVINCIAL FIRE STATION - TYPE-B

MECHANICAL HVAC-FIRST FLOOR

SCALE AS SHOWN

PROJECT NO. 6151-08-0328

A_M101

J:\6151-08-0328 Afghanistan\Task 32.20 Fire Station B\Cad\A_M101 MECHANICAL HVAC-first floor.dwg 12/01/2009 9:52am mpelsher

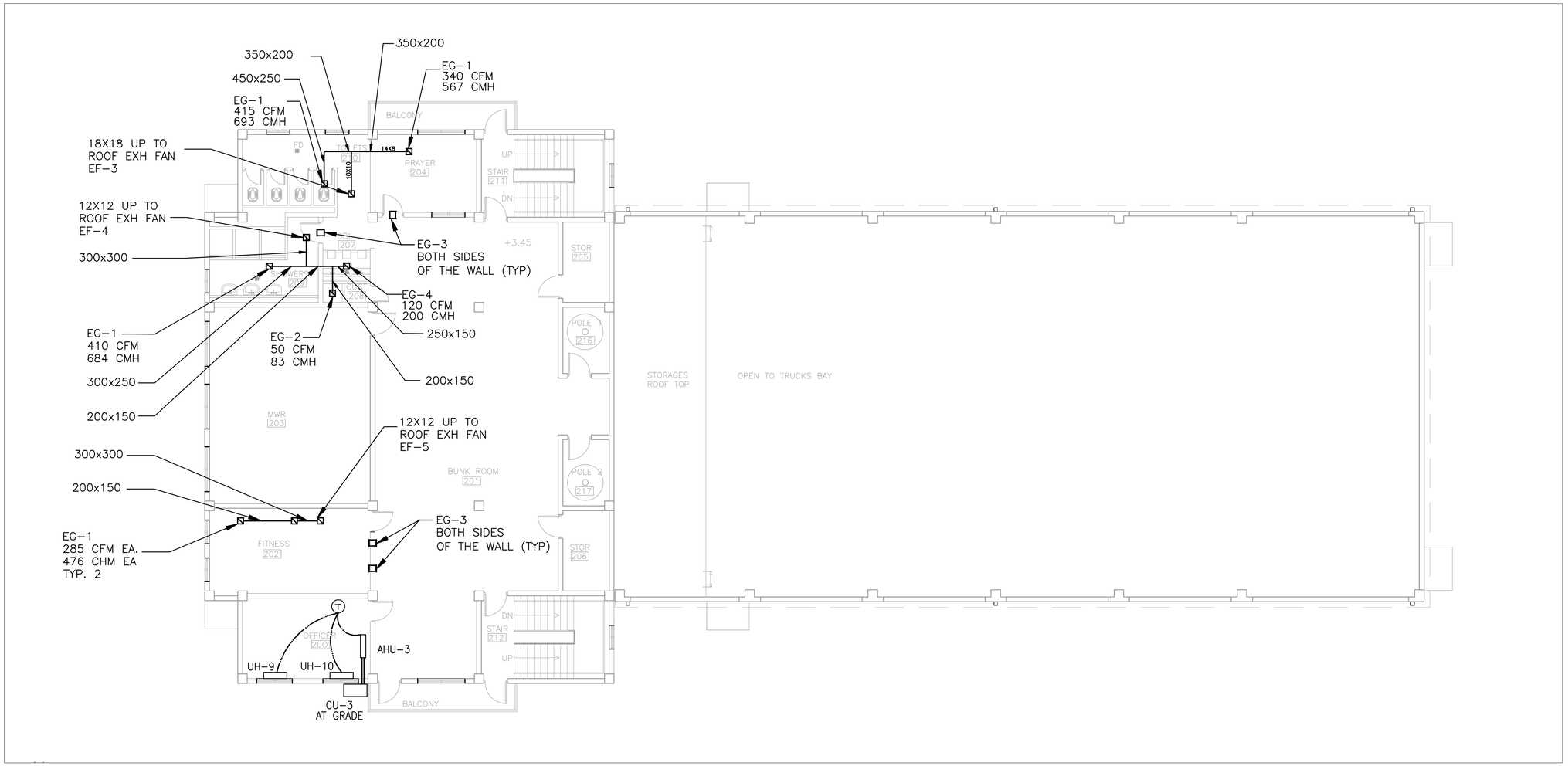

SECOND FLOOR PLAN

1
A_M102 A_M102

2M 0 10M

SCALE 1:100

PRELIMINARY - NOT FOR CONSTRUCTION

REV	DATE	BY	SUB	APP	DESCRIPTION

DESIGNED
DRAWN
CHECKED
IN CHARGE D. WHEELER
DATE 5 DEC 2009

AFGHAN NATIONAL SECURITY FORCE
Comprehensive Plan for Facilities Development

MINISTRY OF INTERIOR (MoI) - AFGHAN NATIONAL POLICE
PROVINCIAL FIRE STATION - TYPE-B

MECHANICAL HVAC-SECOND FLOOR

SCALE
AS SHOWN

PROJECT NO.
6151-08-0328

A_M102

J:\6151-08-0328 Afghanistan\Task 32.20 Fire Station B\Cad\A_M102 mechanical HVAC-Second floor.dwg 12/01/2009 9:52am mjpeisher

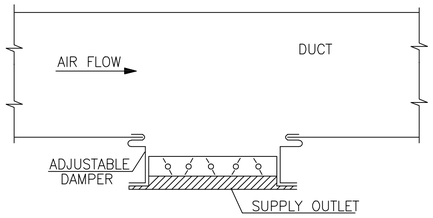

GRIDS AND DAMPERS MUST NOT DAMAGE LINERS

NOTE:
REGISTER AND DIFFUSER CONTAIN VOLUME CONTROL AT GRILLE. GRILLE HAS NO VOLUME CONTROL.

1 DIFFUSER, GRILLE AND REGISTER CONNECTION DETAIL

REF. SCALE: NTS

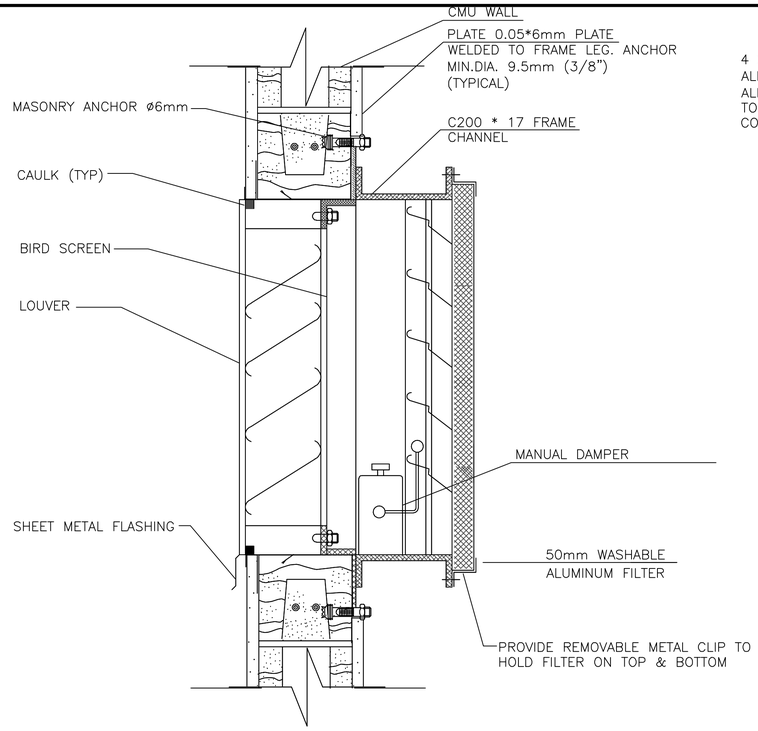

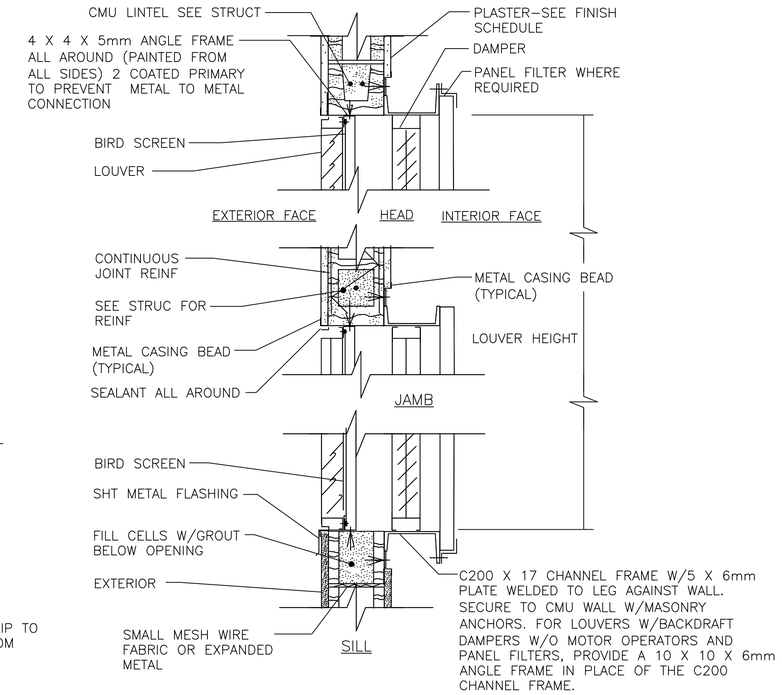

2 LOUVER DETAIL

REF. SCALE: NTS

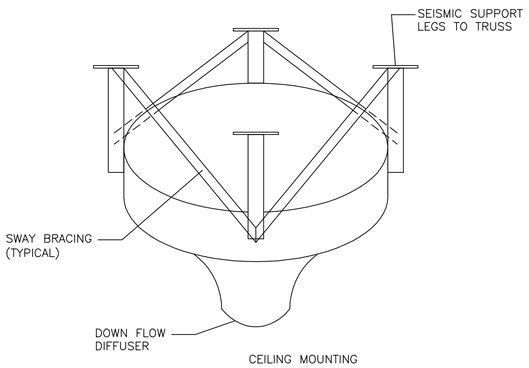

NOTE:
MOUNT UNIT PER MFG. RECOMMENDATIONS WITH CLEARANCE FOR TRUSSES.

4 UNIT HEATER DETAIL

REF. SCALE: NTS

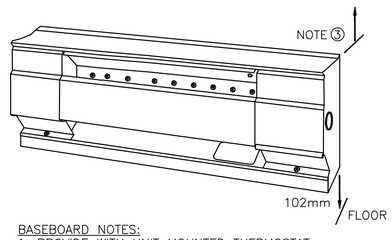

BASEBOARD NOTES:
1. PROVIDE WITH UNIT MOUNTED THERMOSTAT.
2. COORDINATE POWER REQUIREMENTS PER SCHEDULE.
3. PROVIDE 540mm MINIMUM CLEARANCE

6 ELECTRIC BASEBOARD HEATER DETAIL

REF. SCALE: NTS

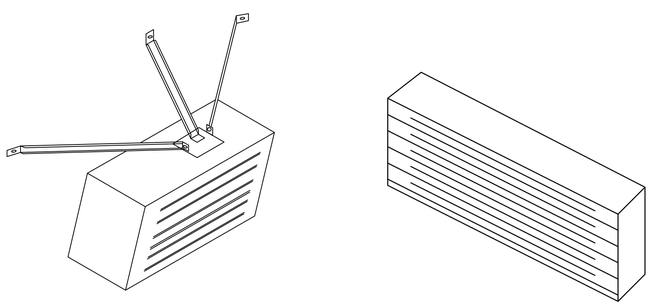

WALL MOUNTING NOTES:
1. MOUNTING BRACKET ACCESSORY KITS BY UNIT HEATER MFG.
2. HEIGHT TO BE DETERMINED BY MANUFACTURER.
3. PROVIDE WITH MALL MOUNTED THERMOSTAT.

BASEBOARD NOTES:
1. PROVIDE WITH UNIT MOUNTED THERMOSTAT.
2. COORDINATE POWER REQUIREMENTS WITH ELECTRICAL.

5 UNIT HEATER DETAIL

REF. SCALE: NTS

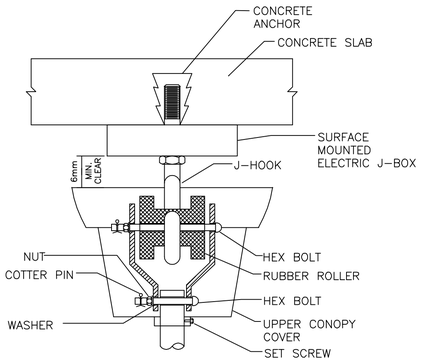

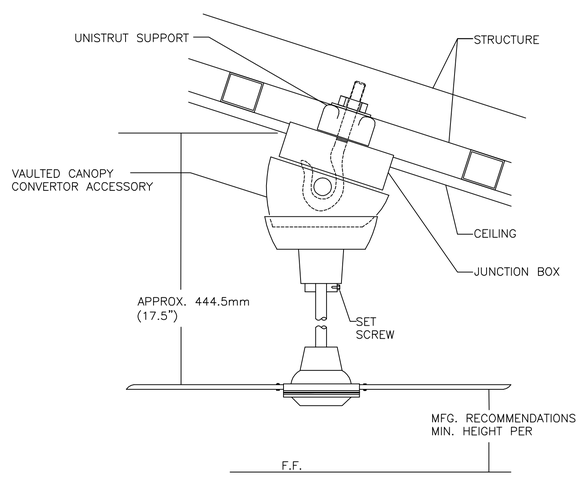

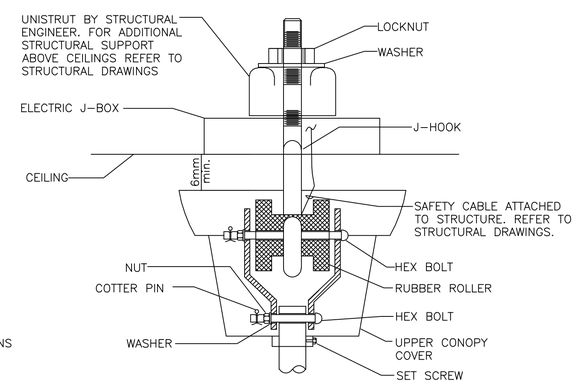

3 CEILING FAN MOUNTING DETAIL

REF. SCALE: NTS

PRELIMINARY - NOT FOR CONSTRUCTION

REV	DATE	BY	SUB	APP	DESCRIPTION

DESIGNED WJB
DRAWN MJP
CHECKED JHM
IN CHARGE D. WHEELER
DATE 5 DEC 2009

AFGHAN NATIONAL SECURITY FORCE
Comprehensive Plan for Facilities Development
MINISTRY OF INTERIOR (MoI) - AFGHAN NATIONAL POLICE
PROVINCIAL FIRE STATION - TYPE-B

TYPICAL HVAC DETAILS

SCALE AS SHOWN

PROJECT NO. 6151–08–0328

A_M201

J:\6151–08–0328 Afghanistan\Task 32.20 Fire Station B\Cad\A_M201 Typical HVAC Details.dwg 12/01/2009 9:52am mjelsher

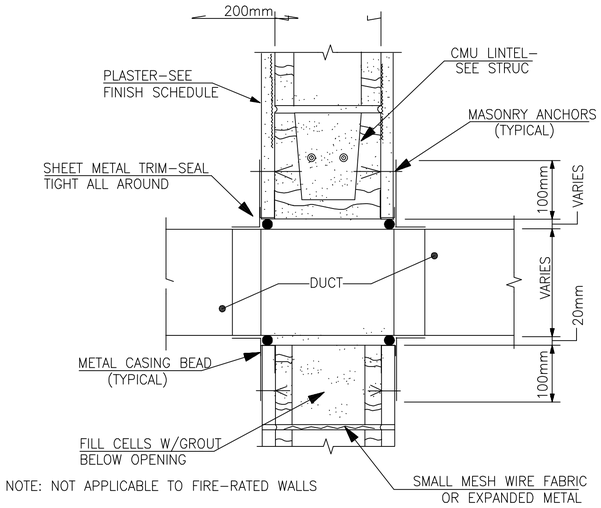

NOTE: NOT APPLICABLE TO FIRE–RATED WALLS

1 DUCT PENETRATION THROUGH WALL DETAIL

REF. SCALE: NTS

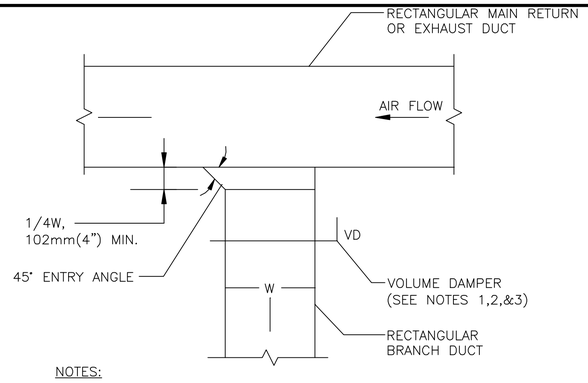

NOTES:

1. UP TO 0.14M²(1.5FT²) CROSS SECTIONAL AREA AND NOT EXCEEDING 610mm(24") IN WIDTH, USE SINGLE BLADE VOLUME DAMPER.

2. FOR CROSS SECTIONAL AREAS FROM 0.14M²(1.5FT²) TO 0.28M²(3FT²) AND NOT EXCEEDING 610mm(24") IN WIDTH, USE 3 SINGLE BLADE VOLUME DAMPERS INDIVIDUALLY OPERATED TO FUNCTION IN AN OPPOSED MANNER.

3. FOR CROSS SECTIONAL AREAS GREATER THAN 0.28M²(3FT²) AND/OR EXCEEDING 610mm(24") IN WIDTH, USE GANG OPERATED OPPOSED BLADE VOLUME DAMPER AND FRAME ASSEMBLY.

2 TYP. LOW PRESSURE RECTANGULAR RETURN/EXHAUST DUCT TAKE-OFF DETAIL

REF. SCALE: NTS

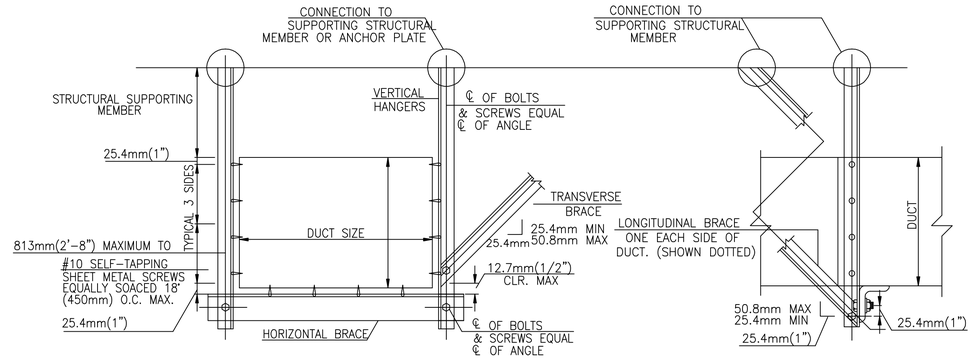

NOTES:–

1– WHEN A COMBINATION OF DUCTS IS USED IN LIEU OF ONE DUCT, AT LEAST 2 SIDES OF EACH DUCT MUST BE CONNECTED TO VERTICAL OR HORIZONTAL ANGLES AND THE COMBINED WEIGHT SHALL NOT EXCEED THAT GIVEN IN THE TABLE. (ADD HORIZONTAL ANGLES IF REQUIRED).

2– SEE TABLE 7–1 FOR VERTICAL HANGERS, DIAGONAL AND HORIZONTAL BRACES, BOLT SIZE, CONNECTION TO STRUCTURAL SUPPORTING MEMBERS, AND SPACING OF BRACING.

3 RECTANGULAR DUCTS SEISMI SUPPORT DETAIL

REF. SCALE: NTS

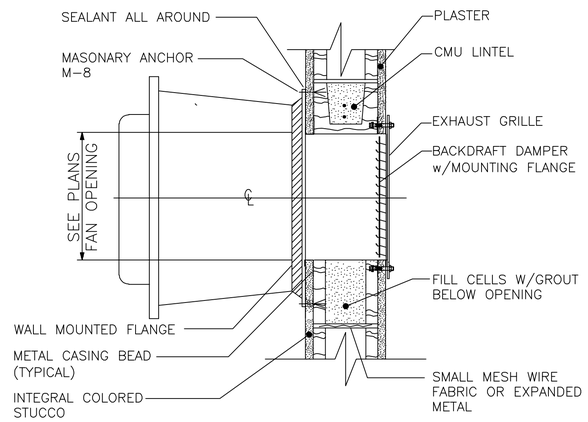

NOTES:–

* GASKET MATERIAL TO BE PROVIDED TO BOTTOM OF FAN INSIDE MOUNTING ANGLES.

5 EXTERIOR WALL EXHAUST FAN INSTALLATION DETAIL

REF. SCALE: NTS

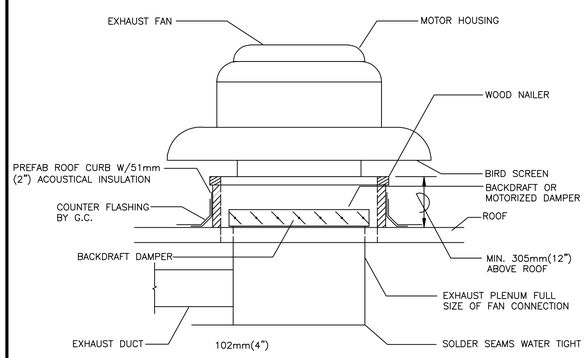

4 ROOF EXHAUST FAN INSTALLATION DETAIL

REF. SCALE: NTS

PRELIMINARY - NOT FOR CONSTRUCTION

REV	DATE	BY	SUB	APP	DESCRIPTION

DESIGNED W.J.B.
DRAWN MJP
CHECKED JHM
IN CHARGE D. WHEELER
DATE 5 DEC 2009

AFGHAN NATIONAL SECURITY FORCE
Comprehensive Plan for Facilities Development

MINISTRY OF INTERIOR (MoI) - AFGHAN NATIONAL POLICE
PROVINCIAL FIRE STATION - TYPE-B

TYPICAL HVAC DETAILS

SCALE AS SHOWN

PROJECT NO. 6151–08–0328

A_M202

J:\6151–08–0328 Afghanistan\Task 32.20 Fire Station B\Cad\A_M202 Typical HVAC Details.dwg 12/01/2009 9:52am mjpeisher

HOOD INFORMATION

HOOD NO.	MODEL	LENGTH	MAX. COOKING TEMP.	EXHAUST PLENUM TOTAL EXH. CFM	EXHAUST PLENUM RISER(S) WIDTH	LENG.	DIA.	CFM	S.P.	SUPPLY PLENUM TOTAL SUP. CFM	SUPPLY PLENUM RISER(S) WIDTH	LENG.	DIA.	CFM	S.P.	HOOD CONSTRUCTION	HOOD CONFIG. END TO END	ROW
1	4824 ND-2	6' 0.00"	600 Deg.	1260	10"	12"		1260	-0.694"	0						430 SS Where Exposed	ALONE	ALONE

HOOD INFORMATION

HOOD NO.	FILTER(S) TYPE	QTY.	HEIGHT	LENGTH	LIGHT(S) QTY.	TYPE	WIRE GUARD	UTILITY CABINET(S) LOCATION	FIRE SYSTEM TYPE	FIRE SYSTEM SIZE	ELECTRICAL MODEL #	SWITCHES QUANTITY	SWITCHES LOCATION	FIRE SYSTEM PIPING	HOOD WEIGHT
1	Stainless Steel (High Efficiency) **	2	16"	16"	2	Compact Flourescent Light Fixture	NO	Right	Ansul R102	3.0	111110FP	1 Light	Outside	YES	354 LBS
		2	16"	20"								1 Fan			

** Note: Filters must be tested to ASTM Standard ASTM F2519-05 to remove 80% of grease particles above 8 microns. **

ND-2 Series Specification

The ND-2 series hood is an exhaust only canopy hood rated for all types of cooking equipment. The hood shall have the size, shape and performance specified on drawings.

Construction shall be type 430 stainless steel with a #3 or #4 polish where exposed. Individual component construction shall be determined by the manufacturer, ETL, and NSF. Construction shall be dependent on the structural application to minimize distortion and other defects. All seams, joints and penetrations of the hood enclosure to the lower outermost perimeter that directs and captures grease-laden vapor and exhaust gases shall have a liquid-tight continuous external weld in accordance with NFPA 96. Hood shall be wall type with fully welded 10 gauge corner hanging angles. Corner hanging angles have a .625 x 1.500 slot pre-punched at the factory, allowing hanging rods to be used for quick and safe installations. Hanging rod and connection is provided by and installed by others.

Ventilator shall be furnished with U.L. classified aluminum baffle filters, supplied in size and quantity as required by ventilator. The filters shall extend the full length of the hood and the filler panels shall not be more than 6" in width.

The hood manufacturer shall supply complete computer generated submittal drawings including hood section view(s) and hood plan view(s). These drawings must be available to the engineer, architect and owner for their use in construction, operation and maintenance.

Exhaust duct collar to be 4" high with 1" flange. Duct sizes, CFM and static pressure requirements shall be as shown on drawings. Static pressure requirements shall be precise and accurate; air velocity and volume information shall be accurate within 1-ft increments along the length of the ventilator.

U.L. incandescent light fixtures and globes shall be installed and pre-wired to a junction box. The light fixtures shall be installed with a maximum of 4'0" spacing on center and allow up to a 100 watt standard light bulb.

The hood shall have:
- A double wall insulated front to eliminate condensation and increase rigidity. The insulation shall have a flexural modulus of 475 EI, meet UL 181 requirements and be in accordance with NFPA 90A and 90B.
- An integral front baffle to direct grease laden vapors toward the exhaust filter bank.
- A built-in wiring chase provided for outlets and electrical controls on the hood face and shall not penetrate the capture area or require an external chaseway.
- A removable grease cup for easy cleaning.

The hood shall be ETL Listed as 'Exhaust Hood Without Exhaust Damper', NSF Listed and built in accordance with NFPA 96. The hood shall be listed for 450°F cooking surfaces at 150 CFM/ft, 600°F cooking surfaces at 200 CFM/ft, and 700°F cooking surfaces at 250 CFM/ft.

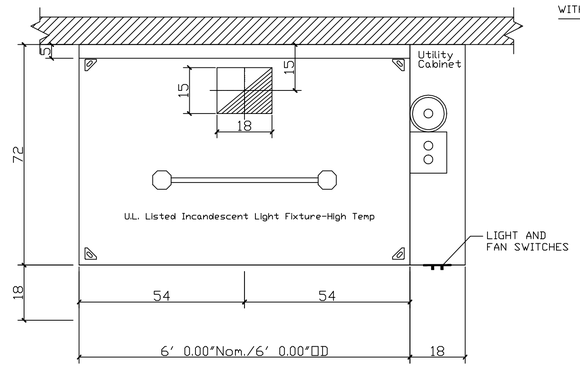

PLAN VIEW – Hood #1
6' 0.00" LONG 4824ND-2

1 PLAN VIEW - HOOD # 1

REF. SCALE: NTS

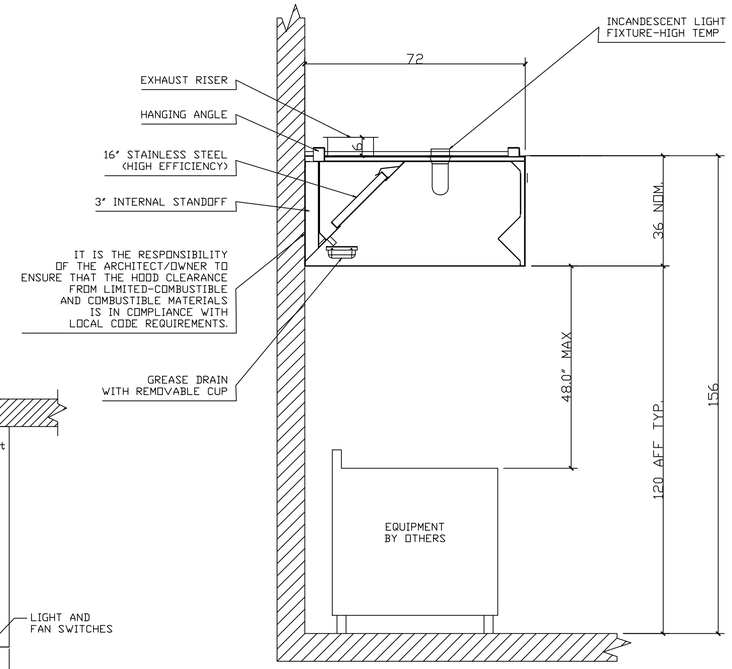

SECTION VIEW – MODEL 4824ND-2

2 SECTION VIEW

REF. SCALE: NTS

SPECIFICATIONS

THE FIRE SUPPRESSION SYSTEM SHALL BE THE PRE-ENGINEERED TYPE WITH A FIXED NOZZLE AGENT DISTRIBUTION NETWORK. IT SHALL BE LISTED WITH UNDERWRITERS LABORATORIES, INC. (UL)

THE SYSTEM SHALL BE CAPABLE OF AUTOMATIC DETECTION AND ACTUATION WITH LOCAL OR REMOTE MANUAL ACTUATION. ACCESSORIES SHALL BE AVAILABLE FOR MECHANICAL OR ELECTRICAL GAS LINE SHUT-OFF APPLICATIONS.

THE EXTINGUISHING AGENT SHALL BE A POTASSIUM CARBONATE, POTASSIUM ACETATE-BASED FORMULATION DESIGNED FOR FLAME KNOCKDOWN AND SECUREMENT OF GREASE RELATED FIRES. IT SHALL BE AVAILABLE IN PLASTIC CONTAINERS WITH INSTRUCTIONS FOR LIQUID AGENT HANDLING AND USAGE.

THE REGULATED RELEASE MECHANISM SHALL BE COMPATIBLE WITH A FUSIBLE LINK DETECTION SYSTEM. THE FUSIBLE LINK SHALL BE SELECTED AND INSTALLED ACCORDING TO THE OPERATING TEMPERATURE IN THE VENTILATING SYSTEM. THE FUSIBLE LINK SHALL BE SUPPORTED BY A DETECTOR BRACKET/ LINKAGE ASSEMBLY.

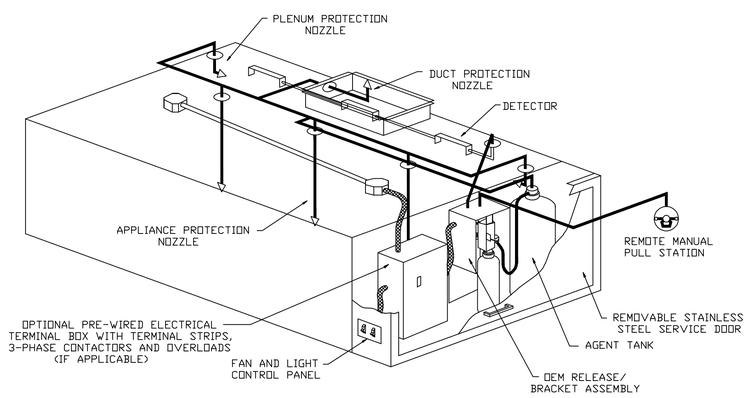

TYPICAL ANSUL R-102 SYSTEM LAYOUT

3 TYPICAL ANSUL R-102 SYSTEM LAYOUT

REF. SCALE: NTS

Wall Mount w/ Standard Curb
(24" WHEEL 2 HP MAXIMUM)

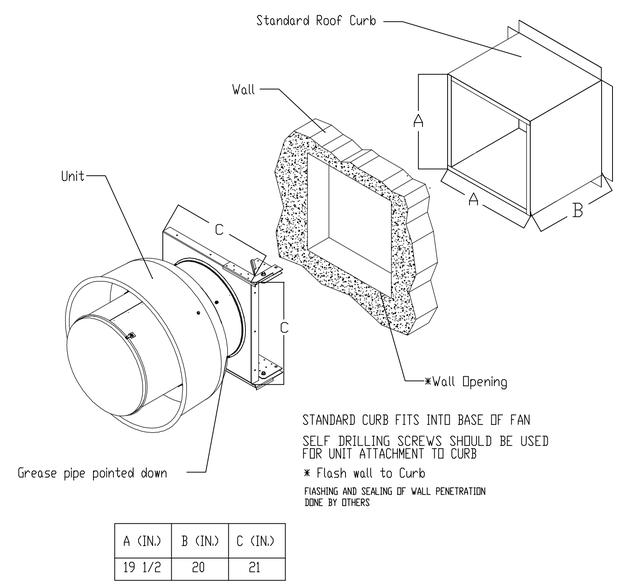

A (IN.)	B (IN.)	C (IN.)
19 1/2	20	21

4 WALL MOUNT WITH STANDARD CURB

REF. SCALE: NTS

Wall Mount w/ Standard Curb SIDE VIEW
(24" WHEEL 2 HP MAXIMUM)

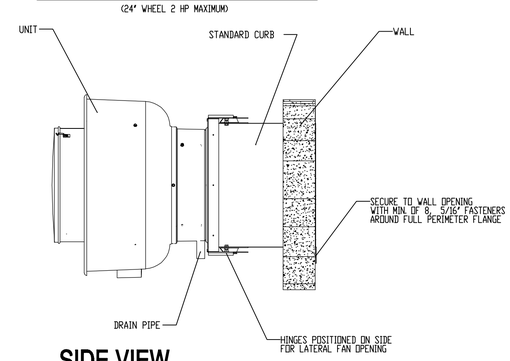

5 SIDE VIEW WALL MOUNT WITH STANDARD CURB

REF. SCALE: NTS

PRELIMINARY - NOT FOR CONSTRUCTION

REV	DATE	BY	SUB	APP	DESCRIPTION

DESIGNED W.B.
DRAWN M.D.P.
CHECKED JHM
IN CHARGE D. WHEELER
DATE 5 DEC 2009

AFGHAN NATIONAL SECURITY FORCE
Comprehensive Plan for Facilities Development
MINISTRY OF INTERIOR (MoI) - AFGHAN NATIONAL POLICE
PROVINCIAL FIRE STATION - TYPE-B

KITCHEN HOOD DETAILS

SCALE AS SHOWN
PROJECT NO. 6151-08-0328

A_M203

J:\6151-08-0328 Afghanistan\Task 32.20 Fire Station B\Cad\A_M203 kitchen Hood Details.dwg 12/01/2009 9:51am mpelsher

SPLIT SYSTEM HVAC SCHEDULE

UNIT NO.	EVAP AIR FLOW CFM (CMH)	TOTAL STATIC PRESSURE	FAN F.L.A.	EVAP DB EAT DEG C	EVAP WB EAT DEG C	EVAP DB LAT DEG C	COOLING TOTAL CAPACITY MBTU/HR	COOLING SENSIBLE CAPACITY MBTU/HR	HEATING TOTAL CAPACITY MBTU/HR	VOLTAGE	PHASES	HERTZ	CONDENSER EAT	CONDENSER F.L.A.	INDOOR UNIT (AHU) MCA	OUTDOOR UNIT (CRU) MCA	CONTROL TYPE	REFERENCE MAKES	COMMENTS
AHU-1	160-380 (272-646)	NA	0.76	23.9	16.9	16	9.3	8.8	4.4	220	1	50	115	0.56	1	12	PROGRAMMABLE T-STAT & MIN 3 SPD	SAMSUNG,SANYO, MITSUBISHI,DAIKAIN	SERVES RM 105(SUPPLEMENTAL HEAT FROM ELEC. FIN TUBE)
AHU-2	160-380 (272-646)	NA	0.76	23.9	16.9	15.2	4.7	5.2	4.4	220	1	50	115	0.56	1	12	PROGRAMMABLE T-STAT & MIN 3 SPD	SAMSUNG,SANYO, MITSUBISHI,DAIKAIN	SERVES RM 103(SUPPLEMENTAL HEAT FROM ELEC. FIN TUBE)
AHU-3	160-380 (272-646)	NA	0.76	23.9	16.9	14.5	5	5.7	0	220	1	50	115	0.56	1	12	PROGRAMMABLE T-STAT & MIN 3 SPD	SAMSUNG,SANYO, MITSUBISHI,DAIKAIN	SERVES RM 104(HEAT FROM ELECTIC FIN TUBE)
AHU-4	260-380 (442-645)	NA	0.76	23.9	16.9	16.4	13.3	12.8	18	220	1	50	115	0.52	1	14	PROGRAMMABLE T-STAT & MIN 3 SPD	SAMSUNG,SANYO, MITSUBISHI,DAIKAIN	SERVES RM 200 (SUPPLEMENTAL HEAT FROM ELEC. FAN COIL)

GRILLES & REGISTERS

I.D.	AIR FLOW RANGE CMH	TYPE/STYLE	NOMINAL LENGTH	NOMINAL WIDTH	COMMENTS
EG-1	370-625	ALUM/ 0-DEFLECTION	0.305M	0.254M	SIMILAR TO TITUS AEROBLADE 56F, REFER TO PLANS FOR AIR FLOW
EG-2	80-170	ALUM/ 0-DEFLECTION	0.152M	0.152M	SIMILAR TO TITUS AEROBLADE 56F, REFER TO PLANS FOR AIR FLOW
EG-3	380-450	ALUM/ 0-DEFLECTION	0.203M	0.203M	SIMILAR TO TITUS AEROBLADE 56F, REFER TO PLANS FOR AIR FLOW
EG-4	175-340	ALUM/ 0-DEFLECTION	0.254M	0.152M	SIMILAR TO TITUS AEROBLADE 56F, REFER TO PLANS FOR AIR FLOW
EG-5	100-120	ROUND	0.152M	0.152M	SIMILAR TO TITUS TMR, REFER TO PLANS FOR AIR FLOW

NOTE, PROVIDE VOLUME DAMPER IN EACH CONNECTION OR PIE DAMPER IN UNDERGROUND TERMINATION

NOTES:

1– OUTDOOR DESIGN AMBIENT CONDITIONS ARE 105 F(40.5 C) DB, 76 F (24.4 C)WB IN SUMMER
2– OUTDOOR DESIGN AMBIENT TEMPERATURE IS –6 F(–21 C) DB IN WINTER
3– PROVIDE WITH LOW AMBIENT CONTROL EQUIPMENT
4– PROVIDED FACTORY MOUNTED DISCONNECT SWITCH.
5– PROVIDE AN INTEGRAL 220–24 VOLT TRANSFORMER MOUNTED WITH A REMOTE PROGRAMMABLE THERMOSTAT AND AN INSULATED REFRIGERANT SUNCTION AND DISCHARGING PIPING.
6– AHU TO BE MOUNTED ON 102MM CONCRETE PAD BY STRUCTURAL.
7– OPEN DRIP PROOF FOR ELECTRICAL TO BE RATED AT 100A

ELECTRIC UNIT HEATER SCHEDULE

UNIT NO.	AIR FLOW CFM (cmh)	DISCHARGE VELOCITY FPM (MPS)	FAN HP (KW)	HEAT OUTPUT KW	VOLTAGE	PHASES	HERTZ	Total Amps	DISCHARGE (V)VERTICAL OR (H) HORIZONTAL	MOUNTING HEIGHT	CONTROL TYPE	MAKES	COMMENTS
UH-1 thru 6	800 (1335)	700 (2,489)	NA	5	220	1	50	22	V	5.49 Meters	24 volt T-stat	MODINE, CHROMALOX , Q-MARK	WITH VERTICAL THROW ADAPTER
UH-7	NA	NA	NA	0.84	220	1	50	3.8	H	0.3 Meters	T-stat	CADET, CHROMALOX, Q-MARK	FAN COIL SURFACE MOUNTED ENCLOSURE
UH-8 thru 10	NA	NA	NA	3.8	220	1	50	17.2	H	0.3 Meters	T-stat	CADET, CHROMALOX, Q-MARK	FAN COIL SURFACE MOUNTED ENCLOSURE

EXHAUST FAN SCHEDULE

UNIT NO.	EXHAUST AIR FLOW CFM (CMH)	EXT. STATIC PRESS. INCHES (mm)WATER	FAN HP (KW)	VOLTAGE	PHASES	HERTZ	FAN TYPE	DRIVE TYPE	SPEED RPM	SOUND dBA	CONTROL TYPE	REFERENCE TO MAKE & MODEL	COMMENTS
EF-1	370 (617)	0.25 (6.3)	(0.062)	220	1	50	CENTRIFUGAL SPUN ALUMINUM WALL MOUNT	DIRECT	1290	50	Lt Sw rm 112	GREENHECK CW-090-L, PENN, CONTINENTAL	SERVES RMS 112 & 123
EF-2	415 (692)	0.25 (6.3)	(0.062)	220	1	50	CENTRIFUGAL SPUN ALUMINUM WALL MOUNT	DIRECT	1290	49	Lt Sw rm 111	GREENHECK CW-090-L, PENN, CONTINENTAL	SERVES RMS 111
EF-3	755 (1260)	0.25 (6.3)	(0.187)	220	1	50	CENTRIFUGAL SPUN ALLUMINUM ROOF MTD	DIRECT	950	53	Lt Sw rm 210	GREENHECK G-131-K, PENN, CONTINENTAL	SERVES RMS 204 & 210 ROOF MOUNTED
EF-4	580 (968)	0.25 (6.3)	(0.062)	220	1	50	CENTRIFUGAL SPUN ALLUMINUM ROOF MTD	DIRECT	1290	51	Lt Sw rm 209	GREENHECK G-095-L, PENN, CONTINENTAL	SERVES RMS 207, 208,209 ROOF MOUNTED
EF-5	570 (951)	0.25 (6.3)	(0.062)	220	1	50	CENTRIFUGAL SPUN ALLUMINUM ROOF MTD	DIRECT	1290	51	Lt Sw rm 202	GREENHECK G-095-L, PENN, CONTINENTAL	SERVES ROOM 202 ROOF MOUNTED
EF-7	110 (183)	0.22 (5.5)	(0.030)	220	1	50	CENTRIFUGAL SPUN ALUMINUM WALL MOUNT	DIRECT	1290	39	LT SW GUARD TOILET ROOM 102	GREENHECK CW070-L, PENN, CONTINENTAL	
EF-8	110 (183)	0.22 (5.5)	(0.030)	220	1	50	CENTRIFUGAL SPUN ALUMINUM WALL MOUNT	DIRECT	1290	39	LT SW GUARD TOILET ROOM 101	GREENHECK CW070-L, PENN, CONTINENTAL	
EF-9	4850 (8094)	0.15 (3.8)	(0.746)	380	3	50	PROPELLER ALUMINUM WALL MOUNT	DIRECT	1425	68	T-STAT	GREENHECK SE1-20-428J	WELL HOUSE VENTILATION WITH INLET GUARDING & OUTLET HOOD
EF-10	1260 (2142)	1 (25.4)	(0.370)	380	3	50	CENTRIFUGAL SPUN ALUMINUM WALL MOUNT FOR GREASE HOOD	DIRECT	1311	NA	HOOD SW	CAPTIVEAIRE NCA10FA OR GREENEHCK OR EQUAL	COORDINATE WITH GREASE HOOD SIZING (WITH GREASE BOX & WALL CURB)
EF-11	680 (1155)	0.25 (6.3)	0.062	220	1	50	CENTRIFUGAL SPUN ALUMINUM WALL MOUNT	DIRECT	1290	51	T-STAT	GREENHECK CW098-J, PENN, CONTINENTAL	SERVES POWER HOUSE
EF-12	120 (203)	0.2 (5.0)	(0.030)	220	1	50	CENTRIFUGAL SPUN ALLUMINUM WALL MTD	DIRECT	1290	39	CONTINUOUS	GREENHECK CW070-L, PENN, CONTINENTAL	SERVES VEHICLE MAINTENANCE PIT

Note - All fans to have back draft dampers and wall mounting sleeves or insulated roof curbs.

ELECTRIC BASEBOARD HEATERS

UNIT NO.	LENGTH	DEPTH	HEIGHT	HEAT OUTPUT KW	VOLTAGE	PHASES	HERTZ	Total Amps	MOUNTING HEIGHT	CONTROL TYPE	COMMENTS
EB-1	2.44 M	0.073 M	0.171	1.69	220	1	50	5.73	0.1 METERS	PROGRAMMABEL	CADET, TRANE OR CHROMALOX,
EB-2	0.91 M	0.073 M	0.171	0.63	220	1	50	2.87	0.1 METERS	PROGRAMMABEL	CADET, TRANE OR CHROMALOX,

NOTE: XX-BASEBOARD HEATER TAGS TO MATCH ELECTRICAL PANEL SCHEDULES

CEILING FAN SCHEDULE (CF)

UNIT NUMBER	TYPE (NOTE 1)	FAN DIAMETER	AMPS	ELECTRICAL DATA VOLTS	PHASE	HERTZ	REMARKS
CF–1–X	A	1320 mm (52 in)	0.29	220	1	50	MODERN FANS – ATLAS MODEL PROVIDE VARIABLE SPEED CONTROLS DIMMER TYPE SWITCH.

NOTES:
1. (LOW CEILING) TYPE FAN BLADES
2. MINIMUM FAN MOUNTING HEIGHT PER MFG RECOMMENDATIONS
3. PROVIDE WITH VARIABLE SPEED CONTROL SWITCH.
4. PROVIDE FANS WITH 8" DOWNROD OPTION.
5. COORDINATE FAN INSTALLATION WITH LIGHTING TO PREVENT UNWANTED STROBING. FANS SHALL BE ABOVE LIGHTS.
6. SEE ELECTRICAL PLANS FOR EXACT LOCATION AND QUANTITY.
7. NOTE: –X : FAN TAG TO MATCH ELECTRICAL PANEL SCHEDULES

LEGEND:

IFH – ELECTRIC INFRARED HEATERS PROVIDED BY OTHERS. (TYPICAL)

4–WAY CEILING DIFFUSER (CD)

CEILING FAN (CF–1)

VD — VOLUME DAMPER

UNIT HEATER. MOUNT 3200mm AFF

AHU — AIR HANDLING UNIT
CMH — CUBIC METERS PER HOUR
CFM — CUBIC FEET PER MINUTE
A/C — AIR CONDITIONING
T — THERMOSTAT
AFF — ABOVE FINISHED FLOOR
RG — RETURN GRILLE
EG — EXHAUST GRILLE
CMH — CUBIC METERS PER HOUR
O.A. — OUTSIDE AIR

THRU WALL EXHAUST FAN

TRANSFER OPENING

OR — ELECTRIC INFRARED HEATERS PROVIDED BY OTHERS IN FUTURE.

FIRE DUMPER IN DUCT WORK

PRELIMINARY - NOT FOR CONSTRUCTION

REV	DATE	BY	SUB	APP	DESCRIPTION

DESIGNED VLB
DRAWN NJP
CHECKED JHM
IN CHARGE D. WHEELER
DATE 5 DEC 2009

AFGHAN NATIONAL SECURITY FORCE
Comprehensive Plan for Facilities Development
MINISTRY OF INTERIOR (MoI) - AFGHAN NATIONAL POLICE
PROVINCIAL FIRE STATION - TYPE-B
MECHANICAL HVAC SCHEDULES

SCALE AS SHOWN
PROJECT NO. 6151–08–0328

A_M601

J:\6151–08–0328 Afghanistan\Task 32.20 Fire Station B\Cad\A_M601 Mechanical – HVAC Schedules.dwg 12/01/2009 9:50am mjelsher

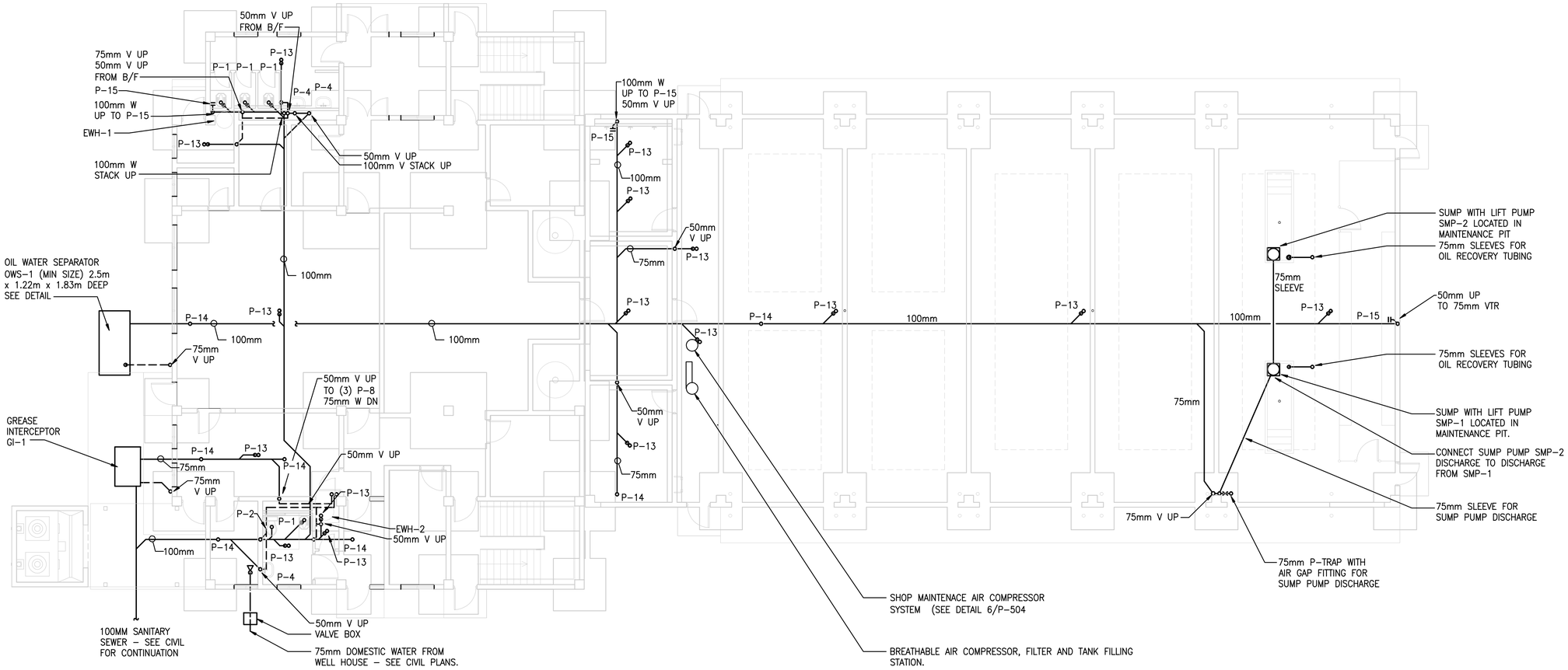

2M 0 10M

SCALE 1:100

I.E. = -1.3m

PLUMBING FIXTURE CONNECTION SCHEDULE						
MARK	FIXTURE	CW MM/INCH.	HW MM/INCH.	VENT MM/INCH.	WASTE MM/INCH.	REMARKS
P-1	WATER CLOSET	19 (3/4")	—	50 (2")	100 (4")	EASTERN WATER CLOSET
P-2	WATER CLOSET	19 (3/4")	—	50 (2")	100 (4")	WESTERN WATER CLOSET
P-3	SHOWER	12.7 (1/2")	12.7 (1/2")	50 (2")	50 (2")	WITH SHOWER HEAD AND HOSE OUTLET SEE DETAIL
P-4	WALL HUNG LAVATORY	12.7 (1/2")	12.7 (1/2")	50 (2")	50 (2")	PROVIDE P-16 BESIDE EACH GROUP OF LAVATORIES
P-5	JANITOR SINK	12.7 (1/2")	12.7 (1/2")	50 (2")	50 (2")	MULTIPLE (MIXING STATION OUTLETS), 1 DRAIN TROUGH
P-6	ABULITION	12.7 (1/2")	12.7 (1/2")	50 (2")	50 (2")	
P-7	WATER COOLER (DF)	12.7 (1/2")	12.7 (1/2")	37.5 (1-1/2")	50 (2")	
P-8	KITCHEN SINK	12.7 (1/2")	19 (3/4")	50 (2")	50 (2")	
P-8P	KITCHEN POT WASH SINK	12.7 (1/2")	19 (3/4")	50 (2")	50 (2")	SINGLE COMPARTMENT
P-9	WATER HEATER	-	—	—	—	SIZE TBD
P-10	WATER HEATER	-	—	—	—	SIZE TBD
P-11	REFRIGERATOR	12.7 (1/2")	—	—	—	
P-12	CABINET MOUNTED LAVATORY	12.7 (1/2")	—	50 (2")	50 (2")	
P-13	FLOOR DRAIN	—	—	—	75 (3")	PROVIDE BASKET STRAINER
P-14	FLOOR CLEAN OUT	—	—	—	-	
P-15	WALL CLEAN OUT	—	—	—	-	
P-16	HOSE BIBB	—	—	—	-	WITH PLEX HOSE SHOWER HEAD & HOLDER WHEN NEAR P-1
P-17	3" P-TRAP	—	—	—	75 (3")	PROVIDE AIR 2x3 GAP FITTING
P-18	OPEN CLEANOUT	—	—	—	-	
P-19	2" P-TRAP	—	—	—	50 (2")	PROVIDE AIR 1-1/2x2 GAP FITTING
P-20	EQUIPMENT WASH OFF	12.7 (1/2")	12.7 (1/2")	—	-	MIXING VALVE WITH HOSE
P-21	HOSE BIBB WITH 10mm HOSE REEL	19 (3/4")	—	—	-	PROVIDE HOSE END NOZZLE
P-22	EMERGENCY EYE WASH	1-1/4" (31.75)	—	—	-	

FIRST FLOOR DRAIN, WASTE AND VENT PLUMBING PLAN 1 A_P101

PRELIMINARY - NOT FOR CONSTRUCTION

REV	DATE	BY	SUB	APP	DESCRIPTION

DESIGNED WJB
DRAWN NJP
CHECKED JHM
IN CHARGE D. WHELLER
DATE 5 DEC 2009

AFGHAN NATIONAL SECURITY FORCE
Comprehensive Plan for Facilities Development
MINISTRY OF INTERIOR (MoI) - AFGHAN NATIONAL POLICE
PROVINCIAL FIRE STATION - TYPE-B

FIRST FLOOR DRAIN, WASTE AND VENT PLUMBING PLAN

SCALE AS SHOWN

PROJECT NO. 6151-08-0328

A_P101

J:\6151-08-0328 Afghanistan\Task 32.20 Fire Station B\Cad\A_P101 Foundation Plumbing Plan.dwg 12/01/2009 9:50am mpelsher

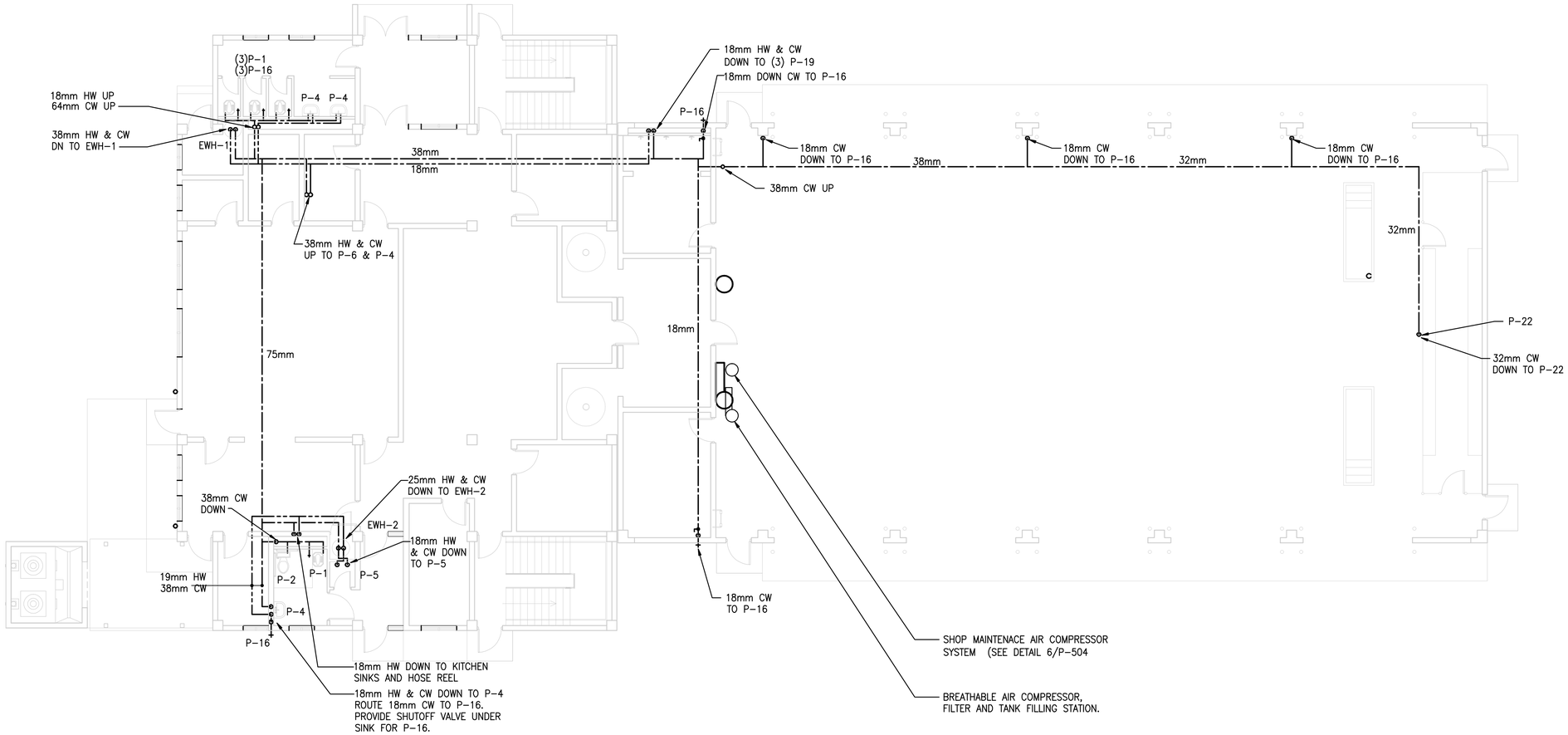

FIRST FLOOR DOMESTIC WATER PLUMBING PLAN

1
P101A

2M 0 10M
SCALE 1:100

PLUMBING FIXTURE CONNECTION SCHEDULE						
MARK	FIXTURE	CW MM/INCH.	HW MM/INCH.	VENT MM/INCH.	WASTE MM/INCH.	REMARKS
P-1	WATER CLOSET	19 (3/4")	—	50 (2")	100 (4")	EASTERN WATER CLOSET
P-2	WATER CLOSET	19 (3/4")	—	50 (2")	100 (4")	WESTERN WATER CLOSET
P-3	SHOWER	12.7 (1/2")	12.7 (1/2")	50 (2")	50 (2")	WITH SHOWER HEAD AND HOSE OUTLET SEE DETAIL
P-4	WALL HUNG LAVATORY	12.7 (1/2")	12.7 (1/2")	50 (2")	50 (2")	PROVIDE P-16 BESIDE EACH GROUP OF LAVATORIES
P-5	JANITOR SINK	12.7 (1/2")	12.7 (1/2")	50 (2")	50 (2")	MULTIPLE (MIXING STATION OUTLETS), 1 DRAIN TROUGH
P-6	ABULITION	12.7 (1/2")	12.7 (1/2")	50 (2")	50 (2")	
P-7	WATER COOLER (DF)	12.7 (1/2")	12.7 (1/2")	37.5 (1-1/2")	50 (2")	
P-8	KITCHEN SINK	12.7 (1/2")	19 (3/4")	50 (2")	50 (2")	
P-8P	KITCHEN POT WASH SINK	12.7 (1/2")	19 (3/4")	50 (2")	50 (2")	SINGLE COMPARTMENT
P-9	WATER HEATER	–	—	—	—	SIZE TBD
P-10	WATER HEATER	–	—	—	—	SIZE TBD
P-11	REFRIGERATOR	12.7 (1/2")	—	—	—	
P-12	CABINET MOUNTED LAVATORY	12.7 (1/2")	—	50 (2")	50 (2")	
P-13	FLOOR DRAIN	—	—	—	75 (3")	PROVIDE BASKET STRAINER
P-14	FLOOR CLEAN OUT	—	—	—	–	
P-15	WALL CLEAN OUT	—	—	—	–	
P-16	HOSE BIBB	—	—	—	–	WITH PLEX HOSE SHOWER HEAD & HOLDER WHEN NEAR P-1
P-17	3" P-TRAP	—	—	—	75 (3")	PROVIDE AIR 2x3 GAP FITTING
P-18	OPEN CLEANOUT	—	—	—	–	
P-19	2" P-TRAP	—	—	—	50 (2")	PROVIDE AIR 1-1/2x2 GAP FITTING
P-20	EQUIPMENT WASH OFF	12.7 (1/2")	12.7 (1/2")	—	–	MIXING VALVE WITH HOSE
P-21	HOSE BIBB WITH 10mm HOSE REEL	19 (3/4")	—	—	–	PROVIDE HOSE END NOZZLE
P-22	EMERGENCY EYE WASH	1-1/4" (31.75)	—	—	–	

PRELIMINARY - NOT FOR CONSTRUCTION

REV DATE BY SUB APP DESCRIPTION

DESIGNED M.P
DRAWN M.P
CHECKED JHM
IN CHARGE D. WHEELER
DATE 5 DEC 2009

AFGHAN NATIONAL SECURITY FORCE
Comprehensive Plan for Facilities Development

MINISTRY OF INTERIOR (MoI) - AFGHAN NATIONAL POLICE
PROVINCIAL FIRE STATION - TYPE-B

First Floor Domestic Water Plumbing Plan

SCALE
AS SHOWN

PROJECT NO.
6151-08-0328

A_P102

J:\6151-08-0328 Afghanistan\Task 32.20 Fire Station B\Cad\A_P102 First Floor Domestic Water Plumbing Plan.dwg 12/01/2009 9:50am mjpeisher

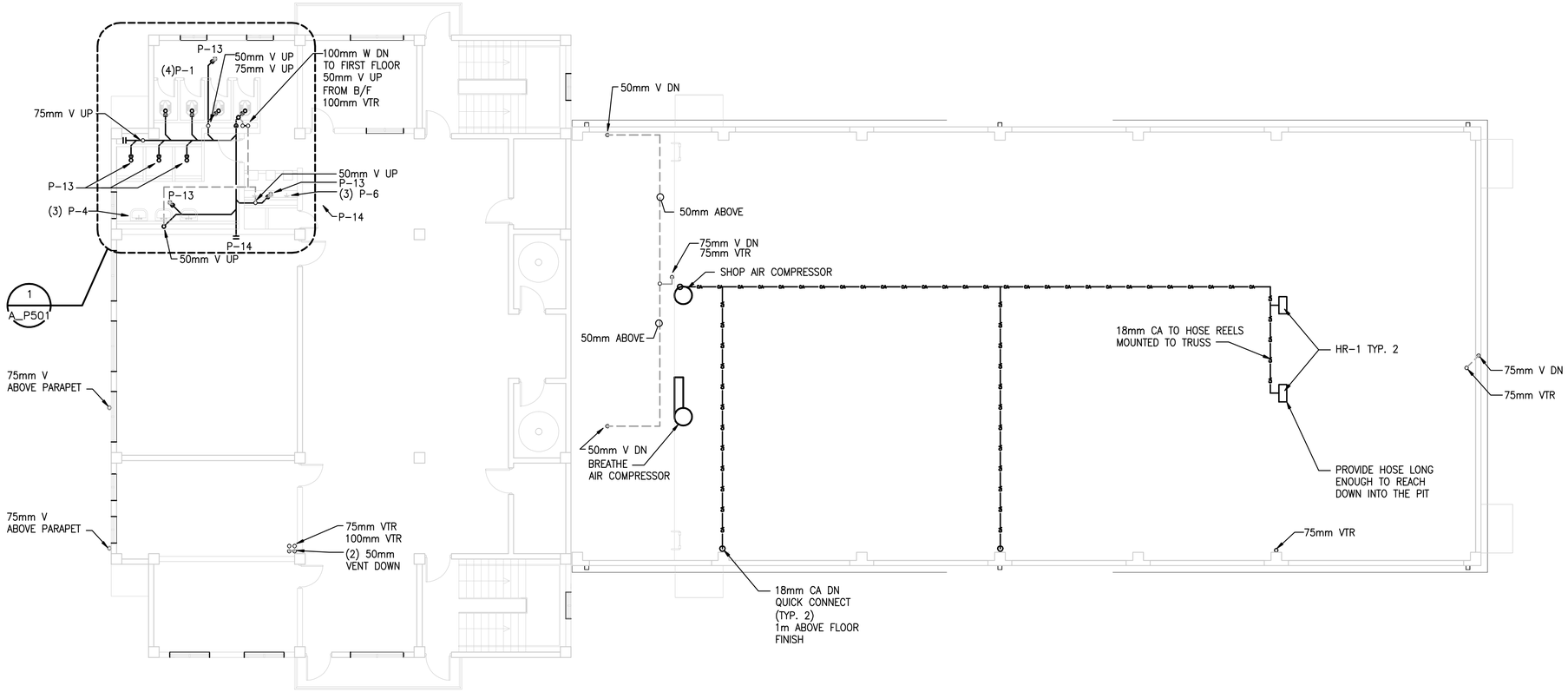

SECOND FLOOR DRAIN WASTE & VENT PLUMBING PLAN

1
A_P103

1M 0 5M

SCALE 1:100

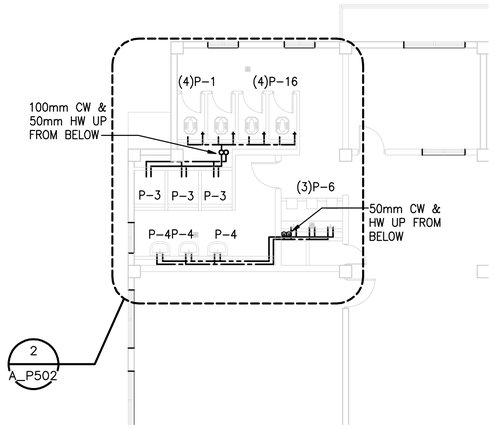

SECOND FLOOR DOMESTIC WATER PLAN

2
A_P103

1M 0 5M

SCALE 1:100

PLUMBING FIXTURE CONNECTION SCHEDULE

MARK	FIXTURE	CW MM/INCH.	HW MM/INCH.	VENT MM/INCH.	WASTE MM/INCH.	REMARKS
P-1	WATER CLOSET	19 (3/4")	—	50 (2")	100 (4")	EASTERN WATER CLOSET
P-2	WATER CLOSET	19 (3/4")	—	50 (2")	100 (4")	WESTERN WATER CLOSET
P-3	SHOWER	12.7 (1/2")	12.7 (1/2")	50 (2")	50 (2")	
P-4	WALL HUNG LAVATORY	12.7 (1/2")	12.7 (1/2")	50 (2")	50 (2")	
P-5	JANITOR SINK	12.7 (1/2")	12.7 (1/2")	50 (2")	50 (2")	
P-6	ABULITION	12.7 (1/2")	12.7 (1/2")	50 (2")	50 (2")	
P-7	WATER COOLER (DF)	12.7 (1/2")	12.7 (1/2")	37.5 (1-1/2")	50 (2")	
P-8	KITCHEN SINK – DOUBLE COMPARTMENT	12.7 (1/2")	19 (3/4")	50 (2")	50 (2")	
P-8P	KITCHEN SINK – KITCHEN POT SINK	12.7 (1/2")	19 (3/4")	50 (2")	50 (2")	
P-9	WATER HEATER	–	—	—	—	SEE SCHEDULE
P-10	WATER HEATER	–	—	—	—	SEE SCHEDULE
P-11	REFRIGERATOR	12.7 (1/2")	—	—	—	
P-12	CABINET MOUNTED LAVATORY	12.7 (1/2")	—	50 (2")	50 (2")	
P-13	FLOOR DRAIN	—	—	—	75 (3")	PROVIDE BASKET STRAINER
P-14	FLOOR CLEAN OUT	—	—	—	–	
P-15	WALL CLEAN OUT	—	—	—	–	
P-16	HOSE BIBB	—	—	—	–	
P-18	OPEN CLEAN OUT	—	—	—	–	SIZE TO MATCH DRAIN
P-19	EQUIPMENT WASH OFF	12.7 (1/2")	12.7 (1/2")	—	–	

PRELIMINARY - NOT FOR CONSTRUCTION

DESIGNED W.J.P.
DRAWN W.J.P.
CHECKED JHM
IN CHARGE D. WHEELER
DATE 5 DEC 2009

REV DATE BY SUB APP DESCRIPTION

AFGHAN NATIONAL SECURITY FORCE
Comprehensive Plan for Facilities Development
MINISTRY OF INTERIOR (MoI) - AFGHAN NATIONAL POLICE
PROVINCIAL FIRE STATION - TYPE-B

Second Floor Plumbing Plan

SCALE AS SHOWN

PROJECT NO. 6151-08-0328

A_P103

J:\6151-08-0328 Afghanistan\Task 32.20 Fire Station B\Cad\A_P103 Second Floor Plumbing Plan.dwg 12/01/2009 9:50am mjpelsher

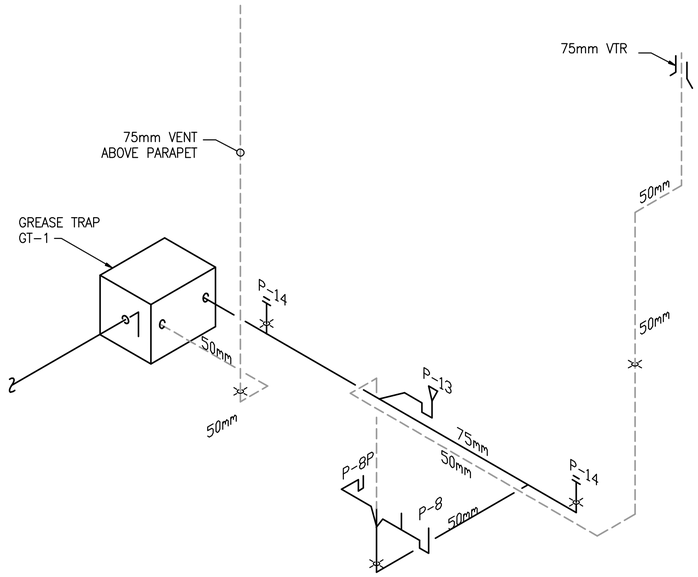

GREASE WASTE AND VENT RISER DIAGRAM 1 P-501

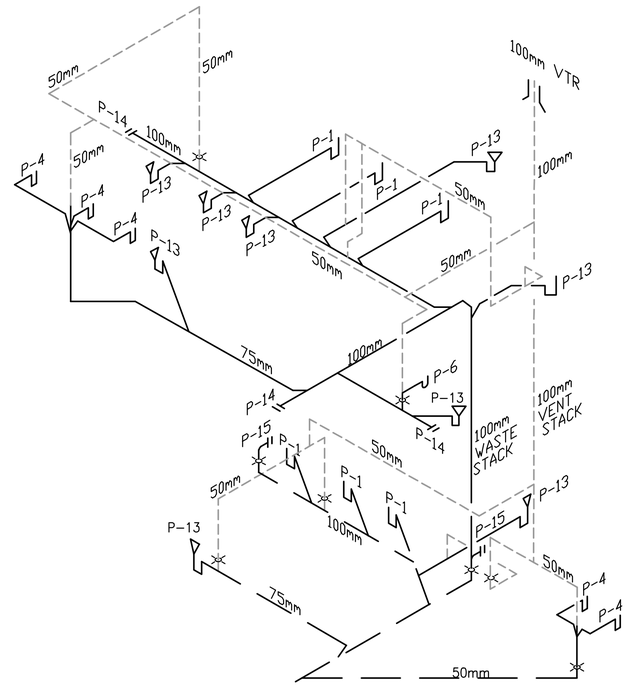

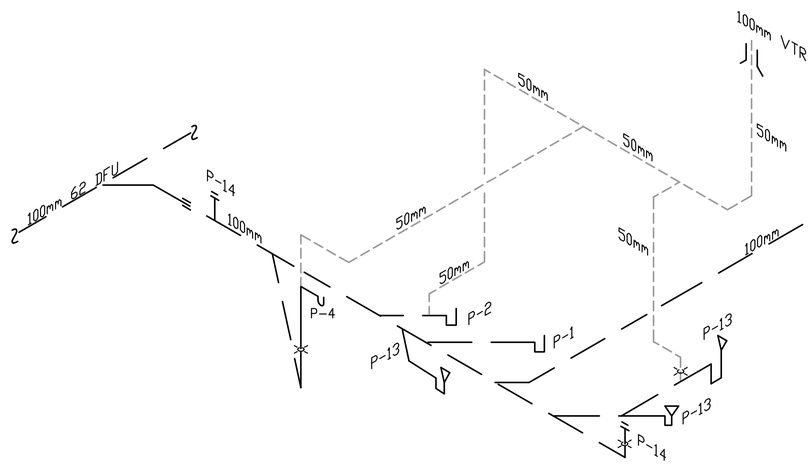

SANITARY WASTE AND VENT RISER DIAGRAM 2 P-501

LEGEND

LINES STYLE	DESCRIPTION
	OIL/ WATER PIPE
	SANITARY VENT PIPE (VP)
	SANITARY/WASTE PIPE ABOVE FLOOR (SP)
	SANITARY/WASTE PIPE BELOW FLOOR (MIN. 50 SIZE)

PRELIMINARY - NOT FOR CONSTRUCTION

REV	DATE	BY	SUB	APP	DESCRIPTION

DESIGNED S. WALKER
DRAWN J. OILE
CHECKED JHM
IN CHARGE D. WHEELER
DATE 5 DEC 2009

AFGHAN NATIONAL SECURITY FORCE
Comprehensive Plan for Facilities Development

MINISTRY OF INTERIOR (MoI) - AFGHAN NATIONAL POLICE
PROVINCIAL FIRE STATION - TYPE-B

Sanitary Drain Waste & Vent Riser Diagram

SCALE AS SHOWN

PROJECT NO. 6151-08-0328

A_P501

J:\6151-08-0328 Afghanistan\Task 32.20 Fire Station B\Cad\A_P501 Sanitary Drain Waste & Vent Riser Diagram.dwg 12/01/2009 9:49am mjeisher

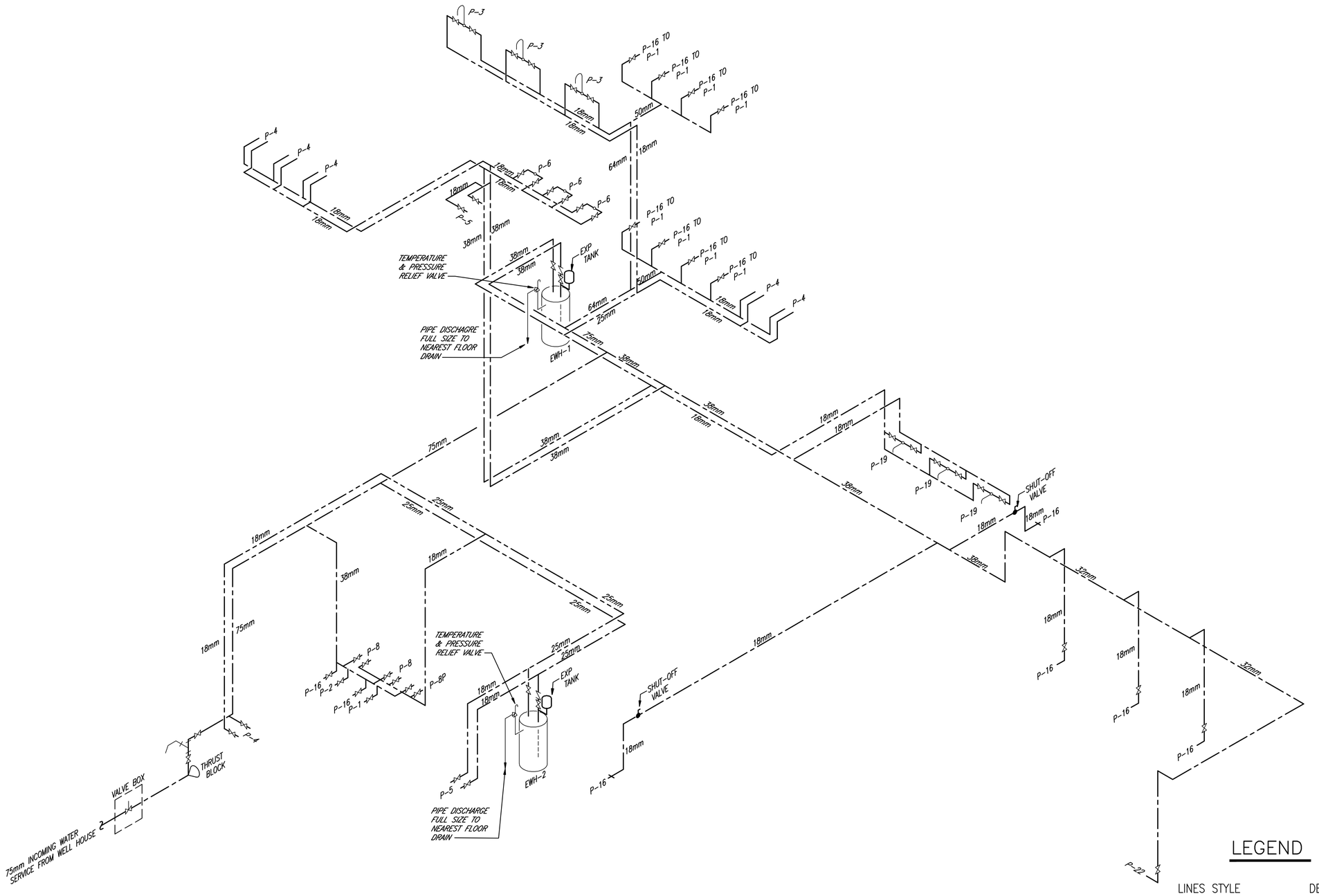

DOMESTIC WATER RISER DIAGRAM 1 P-502

PRELIMINARY - NOT FOR CONSTRUCTION

REV	DATE	BY	SUB	APP	DESCRIPTION

DESIGNED M.B
DRAWN M.P
CHECKED JHM
IN CHARGE D. WHEELER
DATE 5 DEC 2009

AFGHAN NATIONAL SECURITY FORCE
Comprehensive Plan for Facilities Development

MINISTRY OF INTERIOR (MoI) - AFGHAN NATIONAL POLICE
PROVINCIAL FIRE STATION - TYPE-B

Domestic Water Riser Diagram

SCALE AS SHOWN

PROJECT NO. 6151-08-0328

A_P502

J:\6151-08-0328 Afghanistan\Task 32.20 Fire Station B\Cad\A_P502 Domestic Water Riser Diagram.dwg 12/01/2009 9:49am mjpelsher

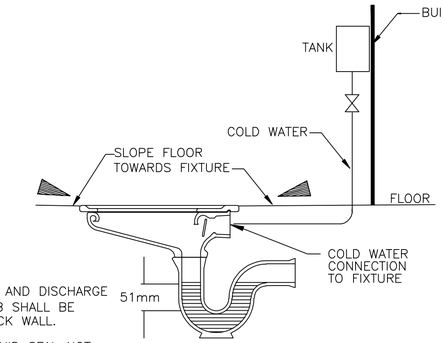

NOTES:

1. IN ADDITION TO INLET AND DISCHARGE PIPING, A HOSE BIBB SHALL BE MOUNTED ON THE BACK WALL.
2. TRAP SHALL HAVE LIQUID SEAL NOT LESS THAN 51mm.
3. ROTATE FIXTURE INSTALL TO ORIENT N/S

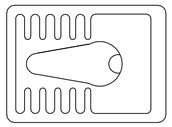

P1

EASTERN

1 WATER CLOSET DETAIL

NOT TO SCALE

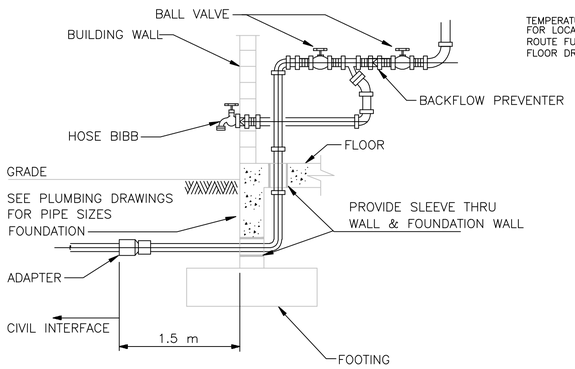

NOTE:
PROVIDE 40mm THICK PIPE INSULATION WITH WEATHERPROOF METAL CLADDING ON EXPOSED WATER SERVICE PIPING

2 WATER SERVICE ENTRANCE DETAIL

NOT TO SCALE

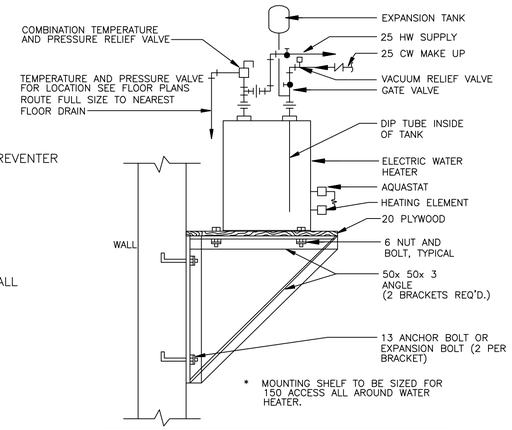

IF WATER HEATER COMES EQUIPPED WITH A MOUNTING BRACKET, CONTRACTOR WILL SUBMIT TO THE ENGINEER FOR APPROVAL. ALTERNATE INSTALLATION DETAIL AS RECOMMENDED BY HEATER MANUFACTURER FOR THE TYPE OF WALL (CMU,METAL STUD, ETC.) APPLICABLE

3 WALL MOUNTED ELECTRIC WATER HEATER DETAIL

NOT TO SCALE

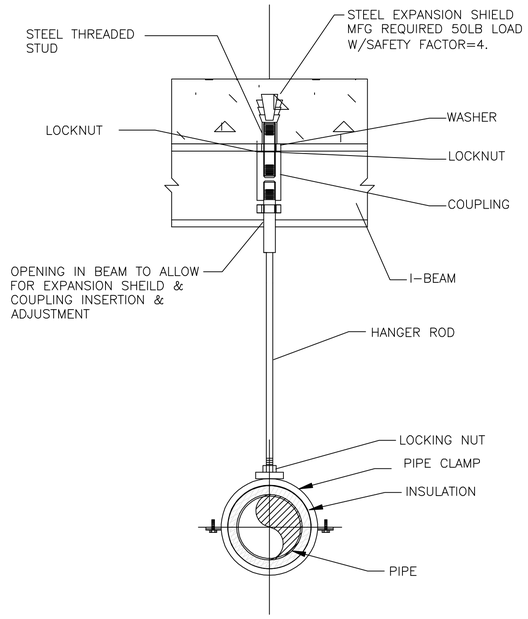

4 PIPE HANGER DETAIL

NOT TO SCALE

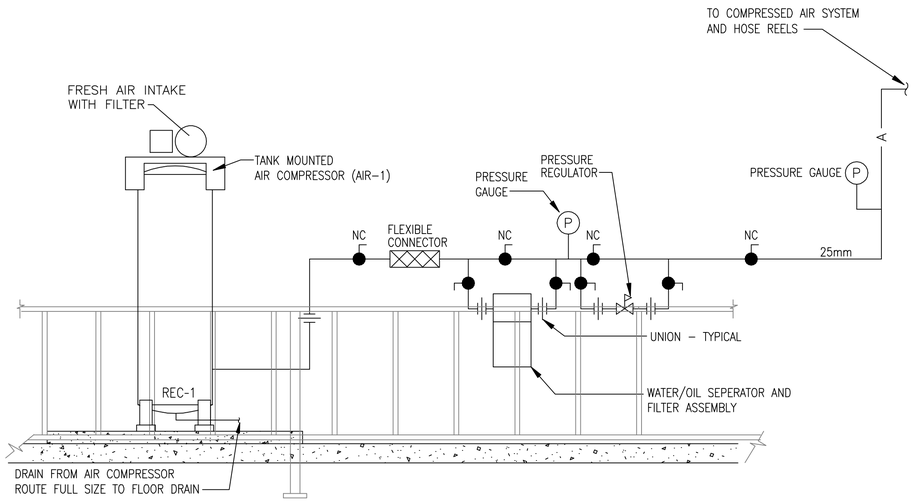

6 SHOP AIR COMPRESSOR

NOT TO SCALE

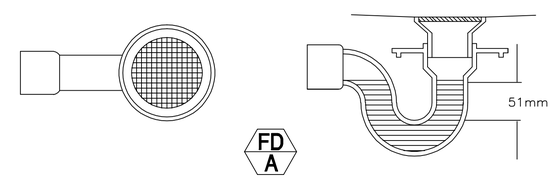

FD A

7 FLOOR DRAIN TYPE A (GENERAL)

NOT TO SCALE

PRELIMINARY - NOT FOR CONSTRUCTION

REV	DATE	BY	SUB	APP	DESCRIPTION

DESIGNED W.J.P.
DRAWN W.J.P.
CHECKED JHM
IN CHARGE D. WHEELER
DATE 5 DEC 2009

AFGHAN NATIONAL SECURITY FORCE
Comprehensive Plan for Facilities Development

MINISTRY OF INTERIOR (MoI) - AFGHAN NATIONAL POLICE
PROVINCIAL FIRE STATION - TYPE-B

Plumbing Details

SCALE
AS SHOWN

PROJECT NO.
6151-08-0328

A_P503

J:\6151-08-0328 Afghanistan\Task 32.20 Fire Station B\Cad\A_P503 Plumbing Details.dwg 12/01/2009 9:49am mjpelsher

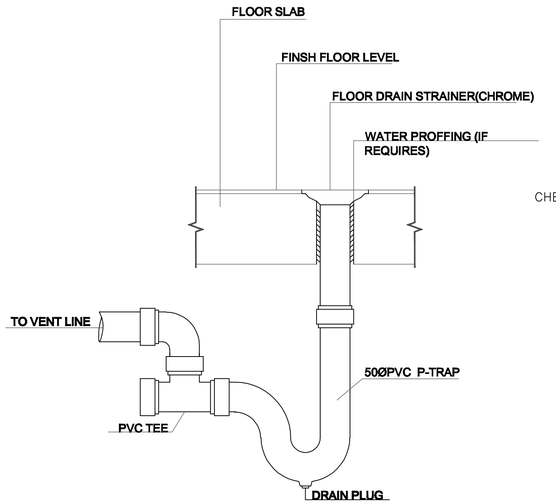

1 TYP. DETAIL OF FLOOR DRAIN WITH VENT INSTALLATION

REF. SCALE: NTS

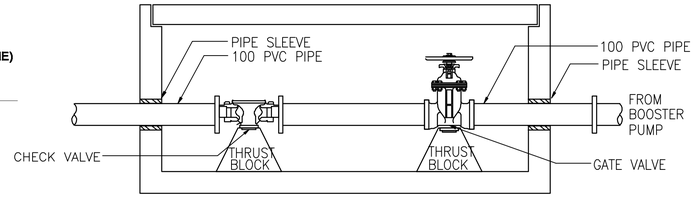

2 VALVE BOX DETAIL - B

REF. SCALE: NTS

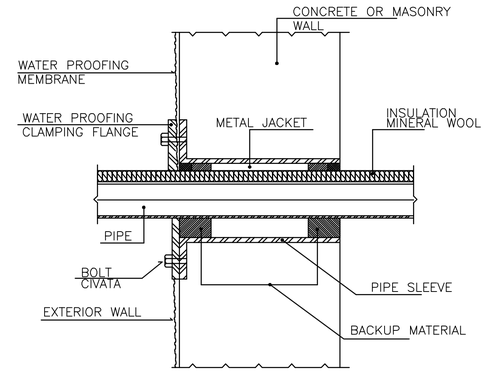

3 PIPE SLEEVE THRU EXT. WALL OR FOUNDATION WALL BELOW GRADE (TYP)

REF. SCALE: NTS

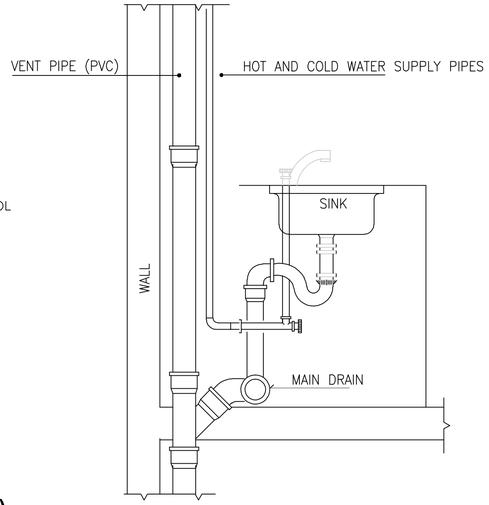

4 TYPICAL SINK INSTALLATION DETAIL

REF. SCALE: NTS

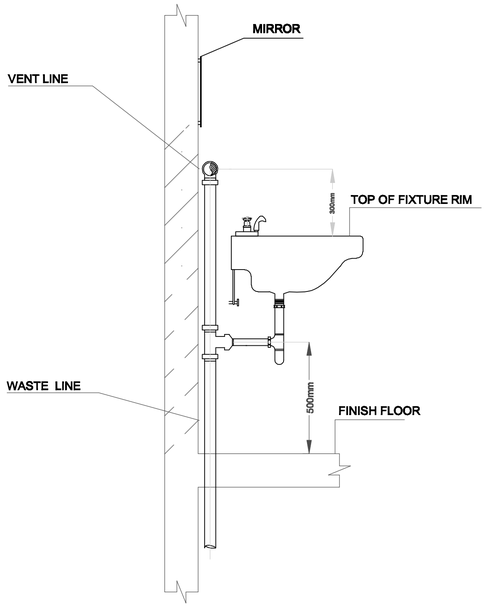

5 TYP. DETAIL OF WALL HUNG LAVATORY INSTALLATION

REF. SCALE: NTS

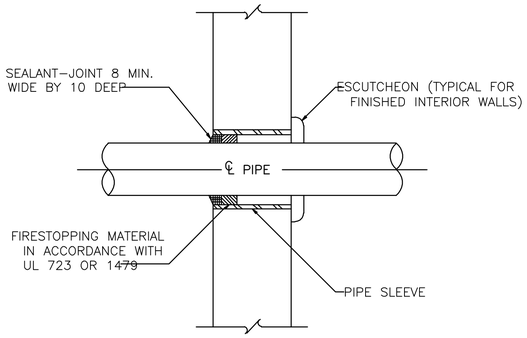

6 TYP. WALL PENETRATION DETAIL

REF. SCALE: NTS

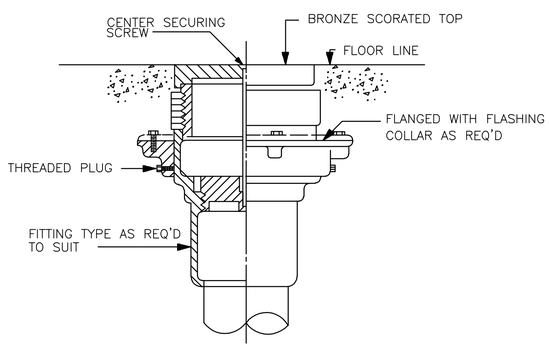

7 FLOOR CLEANOUT DETAIL

REF. SCALE: NTS

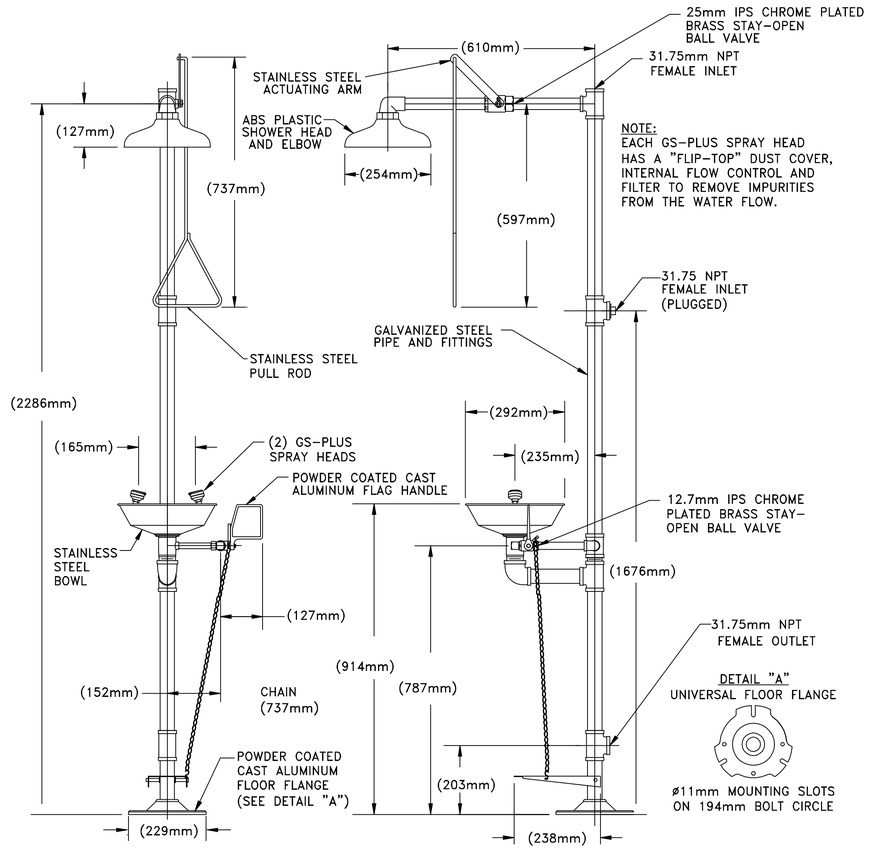

8 EMERGENCY SHOWER DETAIL

NOT TO SCALE

PRELIMINARY - NOT FOR CONSTRUCTION

REV	DATE	BY	SUB	APP	DESCRIPTION

DESIGNED WJS
DRAWN NJP
CHECKED JHM
IN CHARGE D. WHELLER
DATE 5 DEC 2009

AFGHAN NATIONAL SECURITY FORCE
Comprehensive Plan for Facilities Development
MINISTRY OF INTERIOR (MoI) - AFGHAN NATIONAL POLICE
PROVINCIAL FIRE STATION - TYPE-B

Plumbing Details

SCALE AS SHOWN

PROJECT NO. 6151–08–0328

A_P504

J:\6151–08–0328 Afghanistan\Task 32.20 Fire Station B\Cad\A_P504 Plumbing Details.dwg 12/01/2009 9:49am mjeisher

MODEL	DIA.	LENGTH	INLET	OUTLET	FLOW RATE gpm	TANK CAPACITY(GAL.)
HQB342	3'-6"	6'-0"	4"	4"	30-60	350
HQB548	4'-0"	6'-0"	4"	4"	55-110	550
HQB1048	4'-0"	10'-9"	6"	6"	100-200	1000
HQB2064	5'-4"	12'-0"	6"	6"	200-400	2000
HQB3064	5'-4"	18'-0"	8"	8"	300-600	3000
HQB4064	5'-4"	24'-0"	8"	8"	400-800	4000
HQB5072	6'-0"	23'-10"	8"	8"	500-1000	5000
HQB6072	6'-0"	28'-8"	10"	10"	600-1200	6000
HQB7096	8'-0"	18'-8"	10"	10"	700-1400	7000
HQB8096	8'-0"	21'-6"	10"	10"	800-1600	8000
HQB9096	8'-0"	24'-0"	12"	12"	900-1800	9000
HQB1096	8'-0"	26'-8"	12"	12"	1000-2000	10000
HQB1296	8'-0"	32'-0"	12"	12"	1200-2400	12000
HQB15120	10'-0"	25'-6"	14"	14"	1500-3000	15000
HQB20120	10'-0"	34'-0"	18"	18"	2000-4000	20000

NOTES:

1. OIL/WATER SEPARATOR TANK IS SINGLE/DOUBLE WALL STEEL, TYPE 1. CONSTRUCTED IN ACCORDANCE WITH UL 58 STANDARDS.
2. EXTERIOR: CORROSION PROTECTION PER STI P3 , FRP, OR URETHANE.
3. INTERIOR (OPTIONAL): CORROSION PROTECTION CARBOLINE 300M, OR URETHANE.
4. VENT SIZING PER UL 58. ALL VENT PIPING IS BY OTHERS.
5. ALL EXTERIOR PIPING IS BY OTHERS. HYDRO QUIP RECOMMENDS A MINIMUM SLOPE OF 1/16" PER FOOT FOR ALL GRAVITY PIPING.
6. TANK ANCHORING CONSISTS OF ( ) HOLD DOWN STRAPS EQUALLY SPACED ALONG THE TANK.
7. THE NORMAL LIQUID LEVEL IN THE TANK IS SET BY THE EFFLUENT PIPING.
8. ALL CONCRETE WORK IS BY OTHERS. THE DESIGN AND INSTALLATION OF THE CONCRETE SLAB OR DEADMEN IS THE RESPONSIBILITY OF THE INSTALLER.
9. PRODUCT STORAGE CAPACITY IS 30% OF THE TOTAL TANK VOLUME.
10. CONTROL PANEL, INSTRUMENTATION, PROBES, AND ELECTRICAL CONDUIT OR JUNCTION BOXES NOT SHOWN.
11. INSTALL OIL/WATER SEPARATOR PER FURNISHED INSTRUCTIONS.
12. THIRTY (30) YEAR WARRANTY PROVIDED ON EXTERIOR CORROSION PROTECTION.
13. CLEAN INERT SAND, PEA GRAVEL OR CRUSHED STONE.

ITEM	QTY.	STANDARD EQUIPMENT
1	1	INFLUENT PORT W/ISOLATION SPOOL PIECE
2	1	EFFLUENT PORT W/ISOLATION SPOOL PIECE
3	1	OIL PUMPOUT PORT
4	1	LEVEL SENSOR PORT
5	1	SAMPLING/GUAGING PORT
6	2	VENT
7	1	LEAK MONITOR (DOUBLE WALL ONLY)
8	1	ACCESS MANWAY
9	A/R	SACRIFICAL ANODE (sti-P3 ONLY)
10	A/R	LIFTING LUGS
11	A/R	COALESCING MEDIA
12	A/R	HOLDDOWN STRAPS
		OPTIONAL EQUIPMENT
14	1	INTERNAL LADDER
15	A/R	LEVEL CONTROLS - MEMA ENCLOSURE
16	A/R	LEAK DETECTION SYSTEM
17	A/R	AUTOMATIC OIL PUMPOUT SYSTEM
18	A/R	NOT USED
19	1	OIL STOP VALVE
20	A/R	ADDITIONAL MANWAY RISER HEIGHT
		CUSTOMER SUPPLIED EQUIPMENT
21	A/R	INFLUENT & EFFLUENT PIPING
22	A/R	VENT PIPING
23	A/R	ALL OTHER EXTERNAL PIPING
24	A/R	CONCRETE BALLAST PAD OR DEADMEN
25	A/R	CONCRETE HOUSEKEEPING PAD
26	A/R	ANCHOR BOLTS

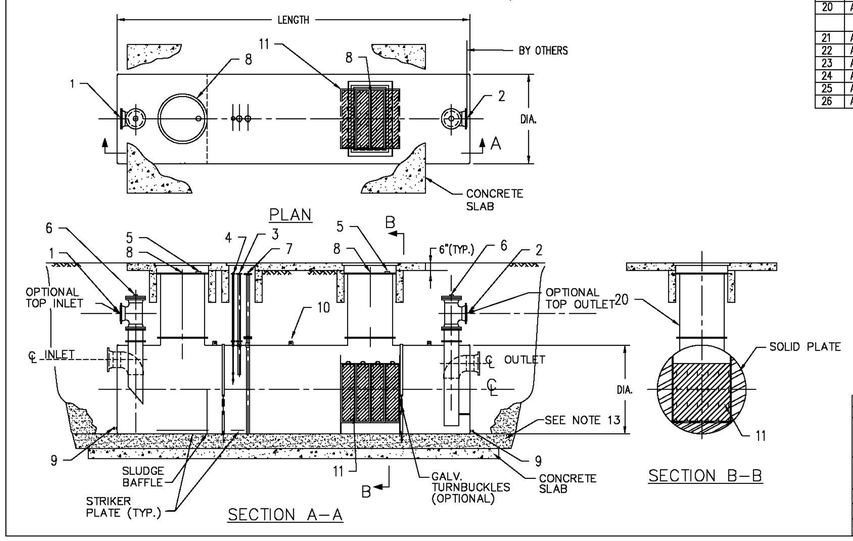

REV.	DESCRIPTION	DATE	INIT.

HYDRO QUIP. INC.
Water Treatment Systems

STANDARD MODEL HQB OIL/WATER SEPARATOR GENERAL ARRANGEMENT BELOW GROUND MAINTENANCE

DRN. BY: PMD
CHKD.BY:
PROJECT:
DATE: 11/22/04
REF: FILE: STUDOWS_BGNL.DWG
SCALE: NTS
REV: A

THIS DRAWING IS PROPERTY OF HYDRO QUIP INC. AND MAY NOT BE COPIED, LOANED OR DISTRIBUTED WITHOUT WRITTEN PERMISSION.

3 OIL WATER SEPARATOR

REF. SCALE: NTS

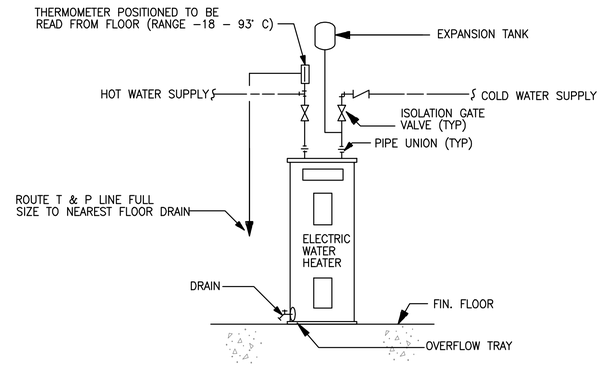

1 WATER HEATER DETAIL

REF. SCALE: NTS

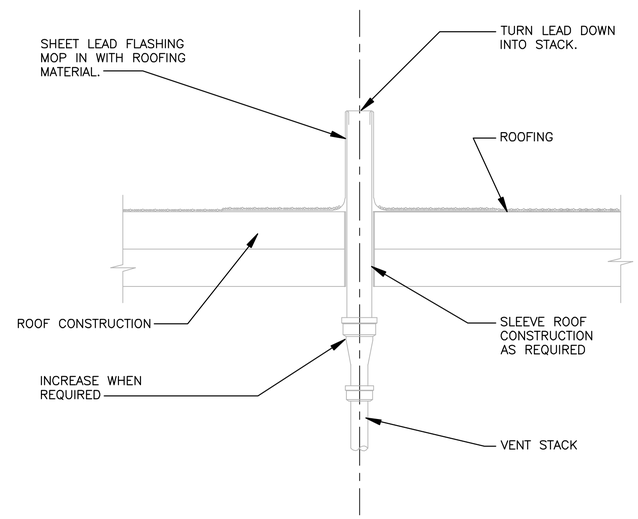

2 VENT THRU ROOF DETAIL SECTION

REF. SCALE: NTS

PRELIMINARY - NOT FOR CONSTRUCTION

REV	DATE	BY	SUB	APP	DESCRIPTION

DESIGNED W.P
DRAWN W.P
CHECKED JHM
IN CHARGE D. WHEELER
DATE 5 DEC 2009

AFGHAN NATIONAL SECURITY FORCE
Comprehensive Plan for Facilities Development
MINISTRY OF INTERIOR (MoI) - AFGHAN NATIONAL POLICE
PROVINCIAL FIRE STATION - TYPE-B

Plumbing Details

SCALE AS SHOWN

PROJECT NO. 6151-08-0328

A_P505

J:\6151-08-0328 Afghanistan\Task 32.20 Fire Station B\Cad\A_P505 Plumbing Details.dwg 12/01/2009 9:49am mjetsher

INTERCEPTOR SCHEDULE							
ID	SERVICE	MINIMUM CAPACITY CUBIC FEET (CUBIC METERS)	FLOW THROUGH CAPACITY GPM (L/S)	GREASE RETENTION LBS (KG)	SERVICE	MANUFACTURE	COMMENTS
GT-1	GREASE	NA	12 (0.76)	24 (10.88)	KITCHEN	ZURN, OR EQUAL	
OIL-1	OIL	69 (1.95)	NA	NA	TRUCK PARKING	CUSTOM	REFER TO DETAIL DRAWINGS

ELECTRIC HOT WATER HEATER SCHEDULE														
UNIT NO.	GALLONS (LITERS)OF STORAGE	RECOVERY RATE GPH (LPH)	NUMBER OF ELEMENTS	TOTAL HEAT OUTPUT KW	VOLTAGE	PHASES	HERTZ	F.L.A.	OUTSIDE DIAMETER	HEIGHT	MOUNTING HEIGHT BOTTOM OF UNIT	MOUNTING KIT (W) WALL OR © CEILING	INCLUDE P&T RELIEF	COMMENTS
EWH-1	30 (114)	212 (802)	6	36	380	3	50	54.7	0.508 M	0.965 M	F. FLOOR	NO	Yes	
EWH-2	30 (114)	212 (802)	6	36	380	3	50	54.7	0.508 M	0.965 M	F. FLOOR	NO	Yes	
EWH-3	6 (22)	17 (64)	1	3	220	1	50	13.7	0.406 M	0.43 M	IN TRUSS	YES	Yes	

COMPRESSOR AIR HOSE REEL SCHEDULE								
UNIT NO.	HOSE LENGTH FT. (M)	SERVICEE PRESSURE PSIG (MPA)	HOSE ID INCES (CM)	REEL TYPE	MOUNTING LOCATION	ACCESSORIES	REFERENCE TO MAKES	COMMENTS
HR-1	100 (30.5)	125 (0.86)	0.375 (0.95)	RATCHETING,SPRING RETRACTING	ROOF TRUSS	FEMALE QUICK CONNECT	HOSECRAFT, INGERSOLL-RAND, BAUER	PIVOTING, COMPLETE WITH HOSE STOP
Note -CONTRACTOR TO ASSEMBLE LOOSE DEVICES AND PIPE DRIPS TO DRAINS								

SUMP PUMP SCHEDULE											
UNIT NO.	FLOW GPM (L/S)	WASTE	PUMP HEAD PRESSURE FT (M)	VOLTAGE	PHASES	HERTZ	PUMP POWER HP (KW)	RPM MAX	PUMP TYPE	CONTROL NOTES	COMMENTS
SMP-1	21 (1.3)	OILY WATER	18 (5.48)	220	1	50	0.33 (.25)	1750	SUBMERSIBLE	LEVEL SWITCHES FOR START STOP AND ALARM WITH REMOTE PANEL	COMPLETE WITH CONTROLS
SMP-2	21 (1.3)	OILY WATER	18 (5.48)	220	1	50	0.33 (.25)	1750	SUBMERSIBLE	LEVEL SWITCHES FOR START STOP AND ALARM WITH REMOTE PANEL	COMPLETE WITH CONTROLS

AIR COMPRESSOR & DRYER SCHEDULE														
UNIT NO.	COMPRESSED AIR FLOW SCFM (SCMH)	DISCHARGE PRESSURE PSIG (MPA)	COMPRESSOR HP (KW)	VOLTAGE	PHASES	HERTZ	DRYER TYPE	DEPOINT TEMP DEG F (DEG C)	DRYER HP (KW)	COMPRESSOR TYPE	STORAGE TANK VOLUME GALLONS (LITERS)	SOUND dBA	REFERENCE TO MAKE & MODEL	COMMENTS
COMP-1	49 (81.8)	125 (0.86)	30 (22.4)	380	3	50	REFRIGERATED	38(3.3)	0.25(.19)	RECIPROCATING	120 (454)	< 80	CHAMPION, VR15F-12; DRYER CRN50	PACKAGE SKID WITH RELIEF, AUTO DRAIN, OIL SEPARTORS, AND VALVING
COMP-2	19 (31.7)	6000 (41.2)	15 (11.2)	380	3	50	DESICANT	-50	NA	OIL FREE RECIP	NA	<80	BAUER UNIII-19E3/50	PACKAGED BREATHING AIR RE-FILL SYSTEM (docks 3 tanks)
Note -CONTRACTOR TO ASSEMBLE LOOSE DEVICES AND PIPE DRIPS TO DRAINS														

PLUMBING FIXTURE CONNECTION SCHEDULE						
MARK	FIXTURE	CW MM/INCH.	HW MM/INCH.	VENT MM/INCH.	WASTE MM/INCH.	REMARKS
P-1	WATER CLOSET	19 (3/4")	—	50 (2")	100 (4")	EASTERN WATER CLOSET
P-2	WATER CLOSET	19 (3/4")	—	50 (2")	100 (4")	WESTERN WATER CLOSET
P-3	SHOWER	12.7 (1/2")	12.7 (1/2")	50 (2")	50 (2")	WITH SHOWER HEAD AND HOSE OUTLET SEE DETAIL
P-4	WALL HUNG LAVATORY	12.7 (1/2")	12.7 (1/2")	50 (2")	50 (2")	PROVIDE P-16 BESIDE EACH GROUP OF LAVATORIES
P-5	JANITOR SINK	12.7 (1/2")	12.7 (1/2")	50 (2")	50 (2")	MULTIPLE (MIXING STATION OUTLETS), 1 DRAIN TROUGH
P-6	ABULITION	12.7 (1/2")	12.7 (1/2")	50 (2")	50 (2")	
P-7	WATER COOLER (DF)	12.7 (1/2")	12.7 (1/2")	37.5 (1-1/2")	50 (2")	
P-8	KITCHEN SINK	12.7 (1/2")	19 (3/4")	50 (2")	50 (2")	
P-8P	KITCHEN POT WASH SINK	12.7 (1/2")	19 (3/4")	50 (2")	50 (2")	SINGLE COMPARTMENT
P-9	WATER HEATER	–	—	—	—	SIZE TBD
P-10	WATER HEATER	–	—	—	—	SIZE TBD
P-11	REFRIGERATOR	12.7 (1/2")	—	—	—	
P-12	CABINET MOUNTED LAVATORY	12.7 (1/2")	—	50 (2")	50 (2")	
P-13	FLOOR DRAIN	—	—	—	75 (3")	PROVIDE BASKET STRAINER
P-14	FLOOR CLEAN OUT	—	—	—	–	
P-15	WALL CLEAN OUT	—	—	—	–	
P-16	HOSE BIBB	—	—	—	–	WITH PLEX HOSE SHOWER HEAD & HOLDER WHEN NEAR P-1
P-17	3" P-TRAP	—	—	—	75 (3")	PROVIDE AIR 2x3 GAP FITTING
P-18	OPEN CLEANOUT	—	—	—	–	
P-19	2" P-TRAP	—	—	—	50 (2")	PROVIDE AIR 1-1/2x2 GAP FITTING
P-20	EQUIPMENT WASH OFF	12.7 (1/2")	12.7 (1/2")	—	–	MIXING VALVE WITH HOSE
P-21	HOSE BIBB WITH 10mm HOSE REEL	19 (3/4")	—	—	–	PROVIDE HOSE END NOZZLE
P-22	EMERGENCY EYE WASH	1-1/4" (31.75)	—	—	–	

PLUMBING LEGEND

SYMBOL	DESCRIPTION
AV	ANGLE VALVE
BV	BALL VALVE
CV	CHECK VALVE
DV	DRAIN VALVE
	COCK VALVE
FCO	FLOOR CLEANOUT
FD	FLOOR DRAIN
FS	FLOOR SIPHON
	GALITRAP
GV	GATE VALVE
HB	HOSE BIBB, PLAN
	INSPECTION MANHOLE
	PIPE TURNING DOWN
	PIPE TURNING UP
CO	PLUG CLEANOUT
	REDUCER-INCREASER
	SUPPORT LOCATION
	Y-TYPE STRAINER
U	UNION
WHA	WATER HAMMER ARRESTOR

ABBREVIATION	DESCRIPTION
℄	CENTER LINE
CO	CLEANOUT
COYB	CLEANOUT IN YARD BOX
CW	COLD WATER PIPES
HW	HOT WATER PIPES
SP	SOIL PIPE
U/G	UNDER GROUND
VP	VENT PIPE
V.R.V	VACUUM RELIEF VALVE
WCO	WALL CLEANOUT
WHA	WATER HAMMER ARRESTOR
WP	WASTE PIPE
VTR	VENT THRU ROOF
AFF	ABOVE FINISH FLOOR
AVTR	ACID VENT THRU ROOF
WH	WALL HYDRANT W/VACUUM BREAKER

LINES STYLE	DESCRIPTION
	COLD WATER (CW)
	HOT WATER (HW)
	HOT WATER RETURN (HWR)
	VENT PIPE (VP)
	SANITARY/WASTE PIPE ABOVE FLOOR (SP)
	SANITARY/WASTE PIPE BELOW FLOOR (MIN. 50 SIZE)
AW	ACID WASTE PIPING
AV	ACID VENT PIPING
WO	WASTE OIL PIPING
CA	COMPRESSED AIR PIPING

EQUIPMENT IDENTIFICATION

EWH-XX-XX

- ELECTRICAL WATER HEATER
- UNIT NUMBER
- BUILDING ABBREVIATION

NOTES:

1. HOT WATER SUPPLIED TO THE ABULITION STATION IS 110 DEG. F
2. ALL PLUMBING COLD, HOT, & RECIRCULATION PIPING SHALL BE PROVIDED WITH 1" THICK GLASS FIBER INSULATION; K VALUE OF 0.24 AT 75 DEG. F. PROVIDE FACTORY APPLIED ALL SERVICE JACKET WITH SELF SEALING LAP (ASJ-SSL). ALL PLUMBING FITTINGS SHALL BE PROVIDED WITH 1" THICK PRECUT FIBERGLASS INSULATION FITTING INSERTS COVERED WITH PVC FITTING COVER.

PRELIMINARY - NOT FOR CONSTRUCTION

REV	DATE	BY	SUB	APP	DESCRIPTION

DESIGNED
DRAWN NJP
CHECKED JHM
IN CHARGE D. WHEELER
DATE 5 DEC 2009

AFGHAN NATIONAL SECURITY FORCE
Comprehensive Plan for Facilities Development
MINISTRY OF INTERIOR (MoI) - AFGHAN NATIONAL POLICE
PROVINCIAL FIRE STATION - TYPE-B

Plumbing Schedules

SCALE AS SHOWN

PROJECT NO. 6151-08-0328

A_P601

J:\6151-08-0328 Afghanistan\Task 32.20 Fire Station B\Cad\A_P601 Plumbing Schedules.dwg 12/01/2009 9:48am mjpeisher

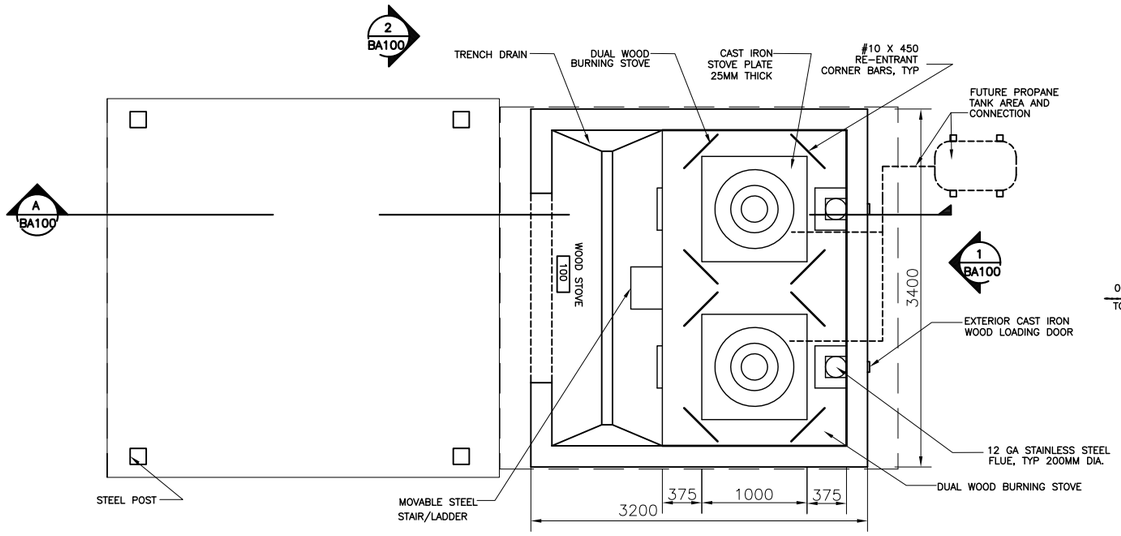

1 | WOOD STOVE & CANOPY FLOOR PLAN

B_A100 SCALE: 1:30

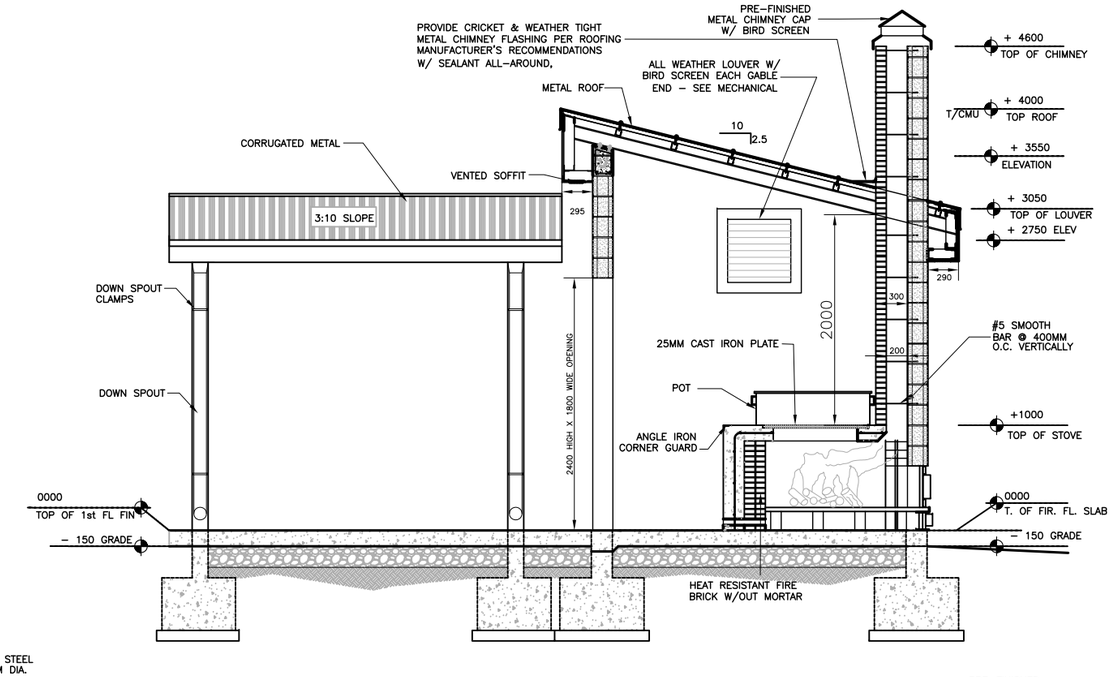

A | SECTION

B_A100 SCALE: 1:30

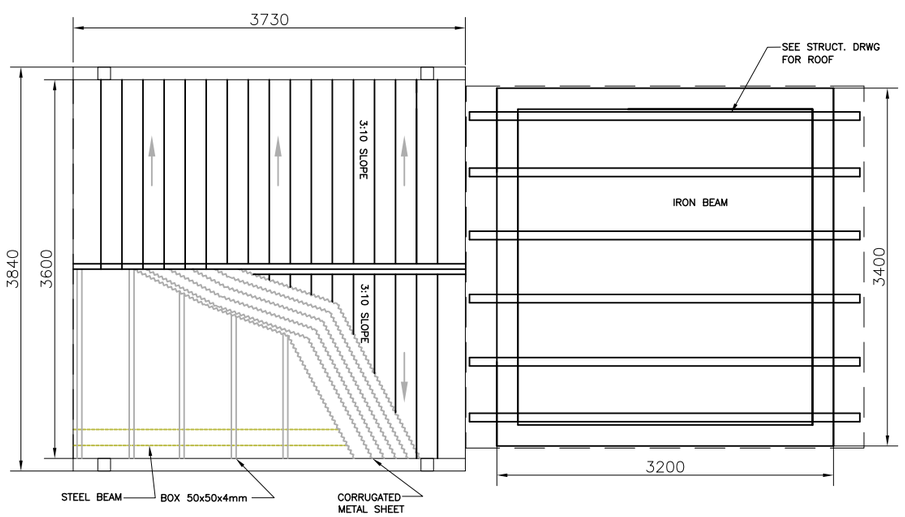

2 | WOOD STOVE & CANOPY ROOF PLAN

B_A100 SCALE: 1:30

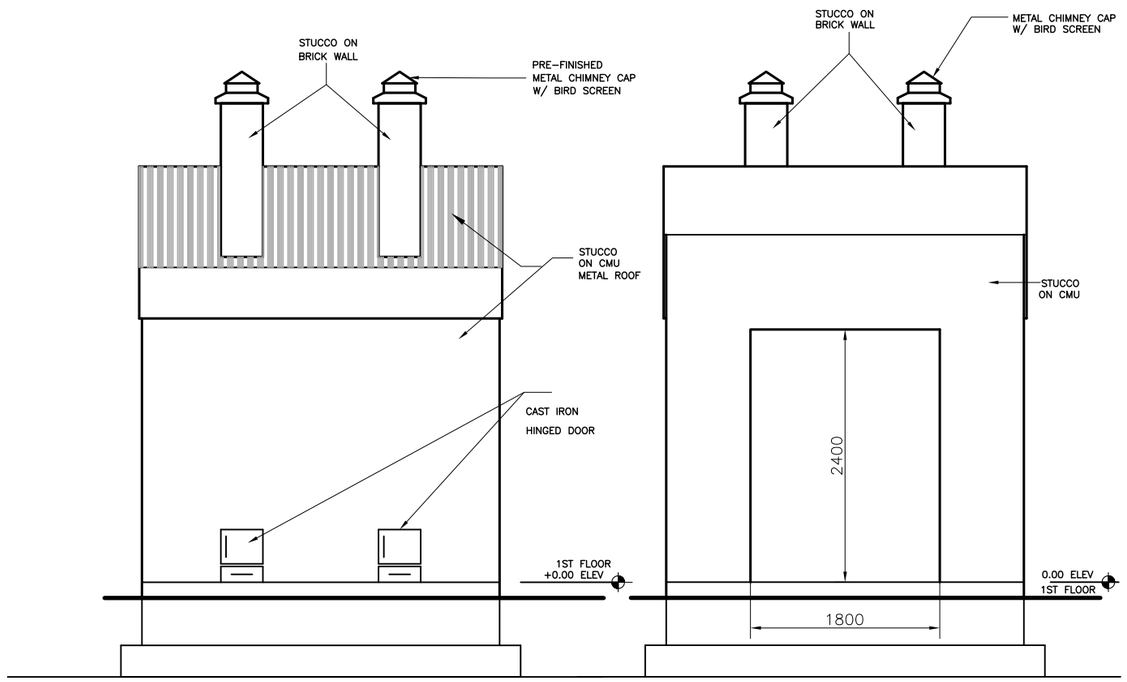

1 | ELEVATION

B_A100 SCALE: 1:30

2 | ELEVATION

B_A100 SCALE: 1:30

300 0 1500

SCALE 1:30

AFGHAN NATIONAL SECURITY FORCE
Comprehensive Plan for Facilities Development

MINISTRY OF INTERIOR (MoI) - AFGHAN NATIONAL POLICE
PROVINCIAL FIRE STATIONS

Wood Stove Kitchen
Plan, Elevation and Section

DESIGNED T. LODGE
DRAWN WAHIDULLAH.Y
CHECKED T. LODGE
IN CHARGE D. WHEELER
DATE 05 DEC 2009

REV DATE BY SUB APP DESCRIPTION

SCALE AS SHOWN

PROJECT NO. –

B_A100

N:\ANP FIRE STATIONS\~0928INITIAL_FSs\A88_C091205\FS\Common_0928INITIAL_Drwgs\ACAD\~B_Wood Stove Kitchen\Architectural\B_A100 Wood Stove Kitchen Plan, Elevation and Section.dwg 01/30/2010 1:44pm CAD_9

ROOM FINISH SCHEDULE

ROOM NO.	ROOM NAME	FLOOR MATERIAL	BASE MATERIAL	WALL MATERIAL	WALL FINISH	CEILING MATERIAL	CEILING FINISH	CEILING HEIGHT	DOOR & WINDOW FINISH MATERIAL	DOOR & WINDOW FINISH FINISH	REMARKS
100	WOOD STOVE	CONC/S	–	P	P–1	P	P–3	VARIES	–	–	LOUVER W/ BIRD SCREEN EACH GABLE END

GENERAL FINISH NOTES/TYPICAL COLORS & MATERIAL SELECTION

FLOORING

CARPET (CPT)
CPT–1 AFGHAN TURKMAN PRODUCT; 6000 x 12000 OR EQUIVALENT
CPT–2 ARABIC CARPET; IT IS AVAILABLE AS PER ROOM DIMENSION
CPT–3 XX

CONC/S CONCRETE SEALED AND HARDENED WITH BROOM FINISH

TERRAZZO TILE (TT)
TT–1 AFGHAN LOCAL PRODUCT; 300mm X 300mm WITH SPECIAL POLISH

ENTRY MAT (MAT)
MAT–1 REESE PERFEC CLEAN ALUMINUM HINGE MAT; RECESSED FRAME WITH NO. 546 CARPET INSERTS, METAL FINISH: MIL ALUMINUM; CARPET INSERTS: MAUVE 8616

CERAMIC TILE (CT)
CT–1 R.A.K CERAMIC UAE; 300mm X 300mm UNPOLISHED PORCELAIN
CT–2 AFGHAN LOCAL PRODUCT; 300mm X 600mm POLISHED PORCELAIN
CT–3 AFGHAN LOCAL PRODUCT; 600mm X 1000mm UNPOLISHE PORCELAIN
CT–4 R.A.K CERAMIC UAE;#4/700RBEM–10 200mm X 200mm UNPOLISHE PORCELAIN
CT–5 R.A.K CERAMIC UAE;# 600CPAR–2 200mm X 300mm UNPOLISHE PORCELAIN

BASE TREATMENTS

MARBLE TILE (MT)
MT–1 AFGHAN LOCAL PRODUCT; 75mm X 100mm CROSS SHEEN PORCELAIN MARBLE TILE COVE BASE; #AXXX EMPRESS BLACK

WALL FINISHES

PAINT/EPOXY PAINT (P/EP):
P–1 BRIGHTO PAINTS; # 42 SAND STONE SUPER EMULSION
P–2 BRIGHTO PAINTS; # 127 CAMEO FOR EXTERNAL USE WEATHER SHIELD
P–3 BRIGHTO PAINTS; # X LATEX FOR WATER BASE WALL AND CEILING
P–4 BRIGHTO METALLIC ENAMEL; # 3 LIGHT GRAY SUITABLE FOR USE ON ALL TYPES OF INTERIOR AND EXTERIOR WOOD AND METAL SURFACES.
P–5 BRIGHTO METALLIC ENAMEL; # 42 ASH WHITE SUITABLE FOR USE ON ALL TYPES OF INTERIOR AND EXTERIOR WOOD AND METAL SURFACES.
P–6 BRIGHTO PAINTS; # 12 OFF WHITE
P–7 BRIGHTO PAINTS; #70 ROSE WHITE
P–8 BRIGHTO PAINTS; #69 LILY WHITE
P–9 BRIGHTO PAINTS; #40 PEACH CREAM

CERAMIC TILE (CT):
CT–4 R.A.K CERAMIC UAE;#4/700RBEM–10 200mm X 200mm UNPOLISHE PORCELAIN
CT–5 R.A.K CERAMIC UAE; # 600CPAR–2 200mm X 300mm UN–POLISHE

CEILING FINISHES

GWB GYPSUM WALL BOARD
DONGFENG BOARD; WITH DIMENSION OF 1200 x 2400 mm AND THICK 3/8
TOTAL WEIGHT APROX. 21KG

PAINTED CEILINGS (P)
P–1 BRIGHTO PAINT; # 12 OFF WHITE

MISCELLANEOUS SURFACES

LAMINATE SURFACES (LAM)
LAM–1 FORMICA; 953–58 ICE WHITE (BREAK ROOMS AND FMT COUNTERTOPS)
LAM–2 FORMICA; 7481–58 NATURAL BIRCH (BREAK ROOMS AND FMT– BASE AND UPPER CABINETS)
LAM–3 FORMICA; 1485–58 CHROME YELLOW (ELEVATOR)

TOILET PARTITIONS (TP)
NOT USED

SIGNAGE (S)
S–1 BACKGROUND COLOR: MATCH P–3, TEXT: WHITE

INTERIOR DOOR AND WINDOW FRAMES
P–4 BRIGHTO ; #3 LIGHT GRAY

INTERIOR WOOD DOORS AND TRIM
WHITE OAK, CLEAR FINISH, NO STAIN

MOVEABLE WALL (MW)
NOT USED

FINISH SCHEDULE ABBREVIATIONS

AFF	ABOVE FINISHED FLOOR	LAM	PLASTIC LAMINATE
ALSF	ALUMINUM STOREFRONT SYSTEM	MANUF	BY MANUFACTURER
		MAT	ENTRY MAT
ATC	ACOUSTIC TILE CEILING	MR	MOISTURE RESISTANT
CB	CEMENT BOARD	MTL	METAL PANEL
CONC/S	CONCRETE SEALED AND HARDENED WITH BROOM FINISH	MW	MOVABLE WALL
		NA	NOT APPLICABLE
		P	PAINT
CPT	CARPET	PREFIN	PREFINISHED
CT	CERAMIC TILE	RB	RESILIENT BASE
EP	EPOXY PAINT	RBP	RACQUETBALL PANEL
EXPOSED	EXPOSED STRUCTURE	VCT	VINYL COMPOSITION TILE
GN	GENERAL NOTE	MT	MARBLE TILE
GWB	GYPSUM WALL BOARD	MTD	METALLIC DOOR
HM	HOLLOW METAL	WD	WOOD DOOR
		TT	TERRAZZO TILE
		PVC	POLYVINYL

GENERAL NOTES

1. THE MANUFACTURER'S NAMES AND THEIR PRODUCTS REFERENCED ONLY INDICATE THE COLOR, TEXTURE, AND PATTERN REQUIRED FOR THE MATERIALS LISTED. THE PRODUCTS FURNISHED SHALL MEET THE COLOR, TEXTURE, AND PATTERN INDICATED AS WELL AS THE MATERIAL QUALITY AND PERFORMANCE SPECIFIED IN THE APPLICABLE TECHNICAL SPECIFICATIONS. THE USE OF MANUFACTURER'S NAMES AND PRODUCTS DO NOT PRECLUDE THE USE OF OTHER MANUFACTURER'S PRODUCTS OF APPROVED EQUAL COLOR, TEXTURE, AND/OR PATTERN IF ALL OTHER REQUIREMENTS ARE MET.
2. ALL VISIBLE GRILLES, DIFFUSERS, AND OTHER MECHANICAL RELATED FINISH OPENING DEVICES INCLUDING FIRE ALARMS SHALL BE PAINTED TO MATCH COLOR OF ADJACENT SURFACE.
3. REFER TO APPROPRIATE ARCHITECTURAL DRAWINGS AND DETAILS TO PROPERLY ASSESS THE FULL EXTENT OF WORK REQUIRED. SPECIFICALLY REFER TO THE REFLECTED CEILING PLANS AND BUILDING SECTIONS TO DETERMINE HEIGHTS OF REQUIRED WALL MATERIALS, SPECIAL CONDITIONS AND STRUCTURES, ETC.
4. REFER TO EXTERIOR ELEVATIONS FOR EXTERIOR FINISH SELECTIONS.
5. INFILL FLOOR AT SLAB RECESSES NOT TO RECEIVE CERAMIC TILE WITH CONCRETE LEVEL WITH ADJACENT FLOOR SURFACES PRIOR TO APPLYING FLOOR FINISH.
6. WALL AND CEILING GWB SURFACES SHALL BE PAINTED WITH FLAT FINISH, TRIM SHALL BE SEMI–GLOSS.
7. INSTALL PLASTIC BUMPER RAILS AND CORNER GUARDS AT MAIN CORRIDORS
8. INTERIOR SURFACE OF EXTERIOR METAL DOORS AND FRAMES SHOULD COMPLY WITH P–4

NOTE:
NOT ALL FINISHES APPLY TO ALL BUILDINGS.

PRELIMINARY - NOT FOR CONSTRUCTION

REV	DATE	BY	SUB	APP	DESCRIPTION
					XXX

DESIGNED BOUZA
DRAWN WAHIDULLAH.Y
CHECKED P.HOPE
IN CHARGE D. WHEELER
DATE 05 DEC 2009

AFGHAN NATIONAL SECURITY FORCE
Comprehensive Plan for Facilities Development
MINISTRY OF INTERIOR (MoI) - AFGHAN NATIONAL POLICE PROVINCIAL FIRE STATIONS

WOOD STOVE FINISH SCHEDULE

SCALE AS SHOWN
PROJECT NO. –

B_A101

N:\ANP FIRE STATIONS\~0928INITIAL_FSs\A65_091205\FS\Common_0928INITIAL_Dwgs\in\CAD\~B_Wood Stove Kicher\Architectural\B_A101 Wood Stove Finishes schedule.dwg 02/13/2010 9:41am CAD_9

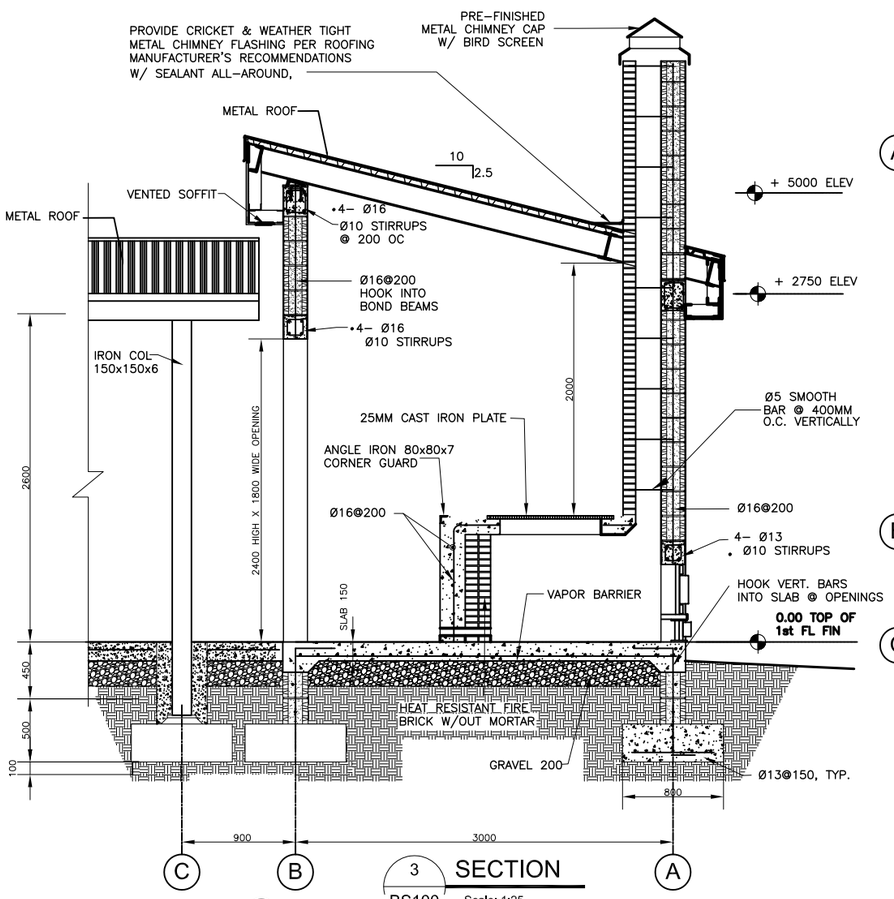

3 BS100 SECTION
Scale: 1:25

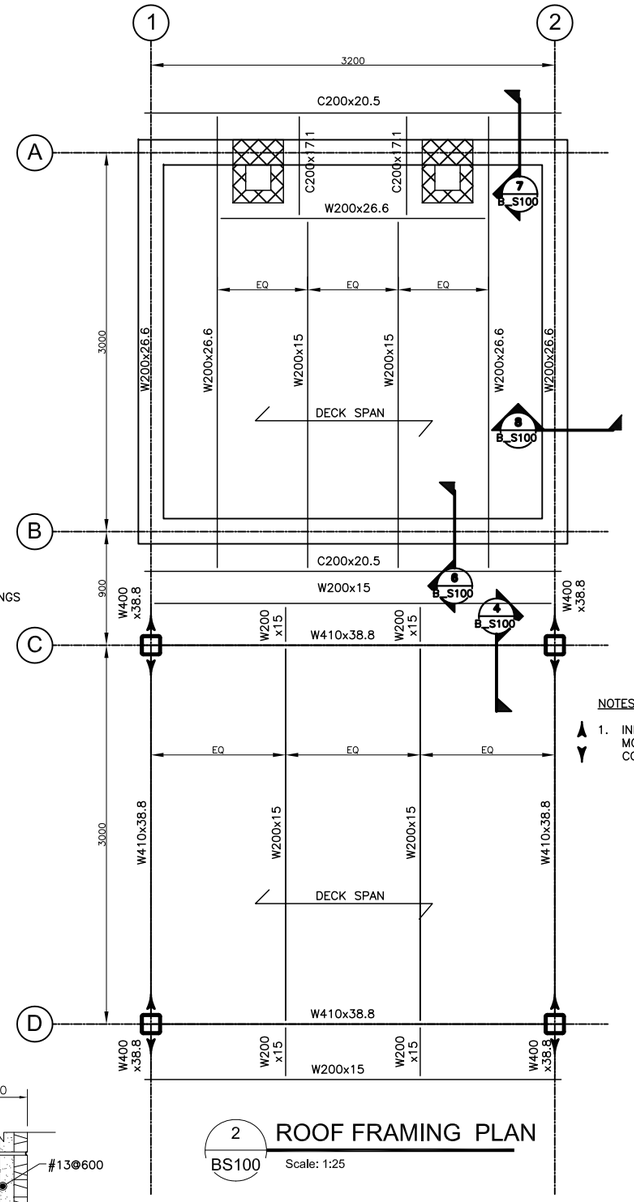

NOTES:

1. INDICATES MOMENT CONNECTION

2 BS100 ROOF FRAMING PLAN
Scale: 1:25

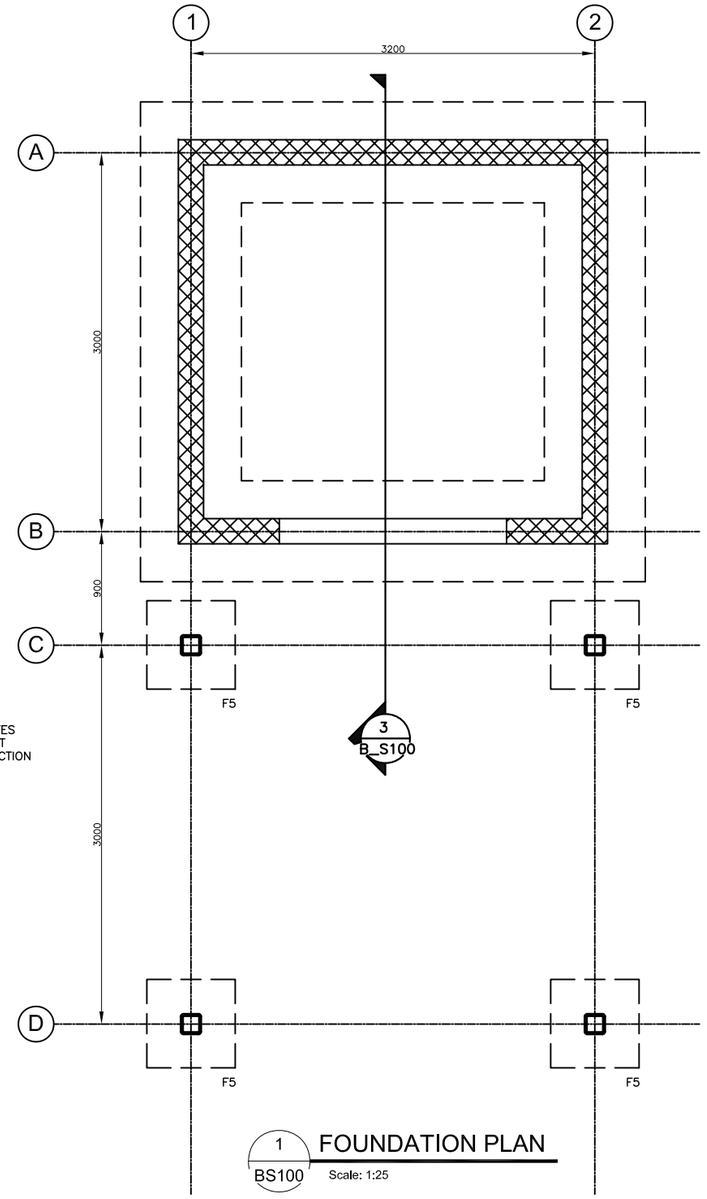

1 BS100 FOUNDATION PLAN
Scale: 1:25

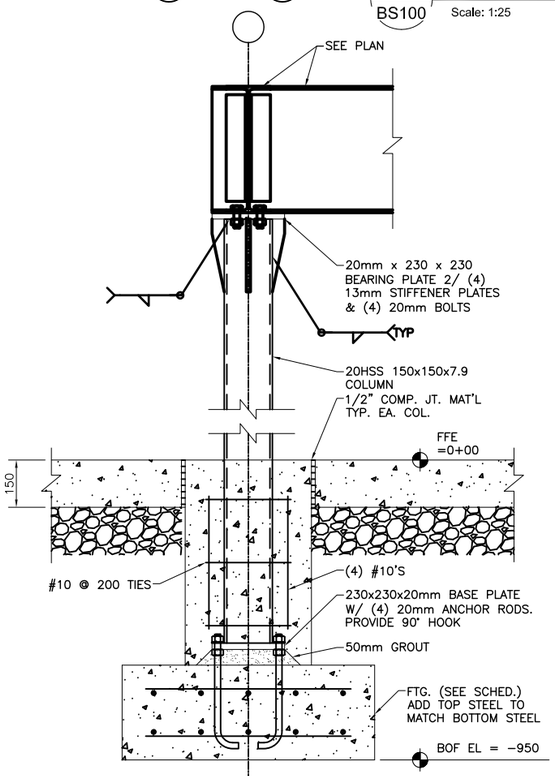

4 BS100 SECTION
Scale: 1:10

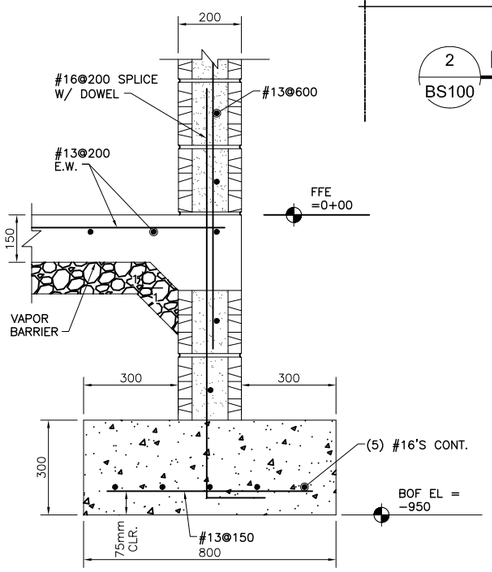

5 BS100 SECTION
Scale: 1:10

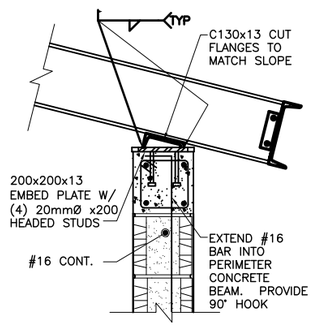

6 BS100 SECTION
Scale: 1:10

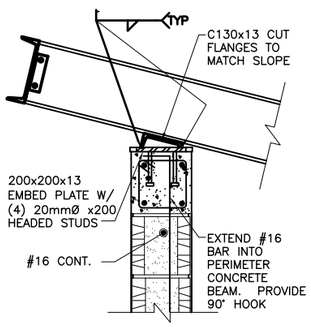

7 BS100 SECTION
Scale: 1:10

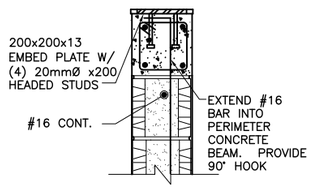

8 BS100 SECTION
Scale: 1:10

PRELIMINARY - NOT FOR CONSTRUCTION

REV	DATE	BY	SUB	APP	DESCRIPTION

DESIGNED V. STEGMEIR
DRAWN M. LORENZ
CHECKED F. HAMMERS
IN CHARGE G. LUCKENBAUGH
DATE 5 DEC 2009

AFGHAN NATIONAL SECURITY FORCE
Comprehensive Plan for Facilities Development

MINISTRY OF INTERIOR (MoI) - AFGHAN NATIONAL POLICE
PROVINCIAL FIRE STATIONS

Wood Stove Kitchen
Foundation Plan and Section

SCALE AS SHOWN

PROJECT NO. –

B_S100

N:\ANP FIRE STATIONS\~9992INITIAL_FSs\AB_091205\FS\Common_9992INITIAL_Drwgs\ACAD\~B_Wood Stove Kitchen\Structural_WoodStoveKitchen\B_S100Wood Stove Kitchen Foundation Plu.dwg 01/31/2010 11:46am CAD_9

SYMBOLS

POWER

- DELTA CONNECTION
- MOTOR
- TRANSFORMER
- WYE CONNECTION
- GROUND CONNECTION
- JUNCTION BOX, CEILING/WALL MOUNTED
- PB — PULL BOX
- RELAY CONTACT, NORMALLY OPEN
- RELAY CONTACT, NORMALLY CLOSED
- FUSE
- CIRCUIT BREAKER
  100AF FRAME SIZE
  70AT TRIP AMPS
- SWITCH AND FUSE UNIT
- 200/3 — UNFUSED SAFETY SWITCH, RATING AS NOTED
  POLES
  AMPERES
- 30/15/3 — FUSED SAFETY SWITCH, RATING AS NOTED
  POLES
  FUSE AMPERE RATING
  SWITCH AMPERE RATING
- 1 — MAGNETIC MOTOR STARTER, RATING AS NOTED
  NEMA SIZE
- COMBINATION TYPE MAGNETIC MOTOR STARTER, RATING AS NOTED
- G — GENERATOR, POWER
- BATTERY
- LIGHTNING ARRESTER
- M — METER
- A — AMMETER
- V — VOLTMETER
- W — WATTMETER
- W — WATT-HOUR METER
- R — RELAY
- AIR TERMINAL
- M — MOTOR
- T — TRANSFORMER
- WYE CONNECTION
- EARTH GROUND
- AIR TERMINAL
- J — JUNCTION BOX
- CABLE TRAY/WIREWAY, AS INDICATED ON THE DRAWINGS
- BRANCH CIRCUIT HOMERUN, TICK MARKS INDICATE
  NUMBER OF #12 AWG CONDUCTORS
  GROUNDING CONDUCTOR
  NEUTRAL CONDUCTOR
  HOT CONDUCTOR
  NO TICK MARKS INDICATES 2#12, 1#12G
- RC — RIGID CONDUIT LINE
- DB — DIRECT BURIAL CABLE
- P — POWER DUCT
- RACEWAY IN CEILING OR WALL
- RACEWAY UNDERFLOOR, UNDERGROUND
- ONE CROSSMARK PER WIRE (3 WIRES UNLESS SHOWN), GROUND NOT SHOWN
- FLEXIBLE RACEWAY
- HOME RUN (ONE ARROW PER CIRCUIT)
- CONDUIT (UP, DOWN)
- EXPOSED RACEWAY
- 380/220V, 50HZ, 4W DISTRIBUTION PANELBOARD (FLUSH, SURFACE MOUNTED)
- WOOD BACKBOARD
- PUSH BUTTON
- FLOOR OUTLET, DATA COMMUNICATION
- D — OUTLET, DATA COMMUNICATION
- C — RECEPTACLE, CLOCK HANGER
- DUPLEX RECEPTACLE
  (WP=WEATHERPROOF)
  (G=GROUND FAULT INTERRUPTING)
  (C=ISOLATED GROUND)
- ABOVE-COUNTER DUPLEX RECEPTACLE
- QUADRAPLEX
- SINGLE RECEPTACLE
- S — SINGLE RECEPTACLE WITH SWITCH
- SPECIAL RECEPTACLE
- VOICE/DATA OUTLET
- STARTER
- S — SWITCH
  F: FUSED
  L: LOCK
  M: MOTOR RATED SWITCH
  MP: MOTOR SNAP WITH PILOT LIGHT
  WP: WEATHER PROOF
  K: KEY OPERATED
  LM: LOW VOLTAGE MASTER
  MC: MOMENTARY CONTACT
  P: WITH PILOT LIGHT
  RC: REMOTE CONTROL
  X: EXPLOSION PROOF

LIGHTING

- S_ — SPST TOGGLE SWITCH
  BLANK: SINGLE POLE
  3: THREE WAY
  D: DIMMER
  LV: LOW VOLTAGE
  LM: LOW VOLTAGE MASTER
  T: TIMER OPERATED
  X: EXPLOSION PROOF
  MO: OCCUPANCY SENSOR
  2: DOUBLE POLE
  4: FOUR WAY
  K: KEY OPERATED
  L: LOCK
  P: WITH PILOT LIGHT
  RC: REMOTE CONTROL
  WP: WEATHER PROOF
- STRIP/INDUSTRIAL FLUORESCENT FIXTURE, TYPE INDICATED
- STRIP/INDUSTRIAL FLUORESCENT FIXTURE W/EMERGENCY BATTERY, TYPE INDICATED.
- 2'X4' FLUORESCENT LIGHTING FIXTURE, TYPE INDICATED
- 2'X4' FLUORESCENT LIGHTING FIXTURE W/EMERGENCY BATTERY, TYPE INDICATED
- WALL MOUNTED LIGHTING FIXTURE
- RECESSED-MOUNTED
- CEILING-MOUNTED OR SUSPENDED
- RECESSED GRID-MOUNTED FLUORESCENT
- SURFACE-MOUNTED FLUORESCENT
- OS — OCCUPANCY SENSOR
- EXIST (WALL, CEILING)
- EMERGENCY LIGHTING BATTERY UNIT WITH 2 LAMP HEADS
- REMOTE EMERGENCY LIGHTING 1 OR 2 LAMP HEADS
- POLE MOUNTED SITE LIGHT, ONE LUMINARIES
- POLE MOUNTED SITE LIGHT, TWO LUMINARIES
- 2'X2' FLUORESCENT LIGHTING FIXTURE, TYPE INDICATED
- 2'X2' FLUORESCENT LIGHTING FIXTURE W/EMERGENCY BATTERY, TYPE INDICATED
- TRACK LIGHT
- BOLLARD
- P — PHOTOCELL
- LC — LIGHTING CONTACTOR

FIRE ALARM EQUIPMENT

- F — FIRE ALARM PULL STATION
- F — FIRE ALARM HORN/STROBE/SPEAKER
- F — FIRE ALARM STROBE ONLY
- S — FIRE ALARM SMOKE DETECTOR
- S — FIRE ALARM DUCT MOUNTED SMOKE DETECTOR
- FAP — FIRE ALARM CONTROL PANEL

GENREAL NOTES

1. ALL ELECTRICAL WORK SHALL BE IN ACCORDANCE WITH THE LATEST APPROVED NEC EDITION, AND LOCAL CODES AND REGULATIONS.
2. A GREEN EQUIPMENT GROUNDING CONDUCTOR INSULATED OR BARE WIRE SHALL BE INCLUDED IN EACH CABLE OR CONDUIT AND ATTACHED TO THE FRAME OF ENCLOSURE OF EVERY ELECTRICALLY ENERGIZED DEVICE. CONDUIT SHALL NOT BE USED AS GROUNDING CONDUCTOR. THE CONDUIT GROUND IS CONSIDERED AS BACK UP GROUNDING.
3. MINIMUM TRADE CONDUIT SIZE SHALL BE 21MM. CONDUITS CONTAINING MORE THAN THREE CURRENT CARRYING CONDUCTORS SHALL BE ADJUSTED ACCORDING TO NEC CODEBOOK (TABLE 310.15(B)(2)(a)).
4. ALL EXTERIOR CONDUIT SHALL BE RIGID GALVANIZED STEEL AND ALL UNDERGROUND CONDUITS SHALL BE PVC UNLESS OTHERWISE NOTED.
5. ROUTE POWER AND LIGHTING BRANCH CIRCUIT CONDUCTORS TO THEIR PERSPECTIVE CIRCUITS IN LOAD CENTER.
6. COORDINATE LIGHTING FIXTURES LOCATIONS WITH OTHER EQUIPMENT PRIOR TO INSTALLATION.
7. ALL CONDUIT RUNS SHALL BE MADE EITHER PARALLEL OR PERPENDICULAR TO STRUCTURES.
8. FIELD VERIFY ALL DIMENSIONS PRIOR TO COMMENCING WORK.
9. ALL CONDUITS AND CABLES SHALL HAVE A NON-CORRODING TAG. ALL WIRES SHALL HAVE A NON-CORRODING TAG. ALL TERMINAL BLOCKS SHALL HAVE A NON-CORRODING IDENTIFICATION OF WIRE NUMBERS FROM SCHEMATICS.
10. ALL MATERIAL FURNISHED BY THE CONTRACTOR SHALL BE NEW AND UL LISTED. MATERIALS SHALL BE SUBJECT TO TEST, INSPECTION AND APPROVAL BY THE OWNER OR THE ENGINEERS.
11. WIRES AND CABLES SHALL HAVE BE PULLED INTO THEIR CONDUITS BY APPLICATION OF SUITABLE LUBRICANTS THAT WILL HAVE NO INJURIOUS EFFECT ON THE COVERING TO THE CONDUCTOR. OIL OR GREASE SHALL NOT BE USED. WIRES AND CABLES SHALL BE INSTALLED WITHOUT JOINTS OR SPLICES INSOFAR AS PRACTICAL. SUFFICIENT WIRE SHALL BE LEFT AT ALL OUTLETS FOR CONNECTING FIXTURES AND WIRING DEVICES. WHEN FITTINGS ARE REQUIRED WITH PLUGS FOR POSSIBLE FUTURE EXTENSIONS, SUFFICIENT LOOP IN WIRE SHALL BE LEFT FOR THIS PURPOSE.
12. ALL CIRCUITS SHALL BE CORRECTLY IDENTIFIED AND A DIRECTORY SHALL BE MADE FOR THE LOAD CENTER.
13. THE CONTRACTOR SHALL INSTALL AND TEST THE COMPLETE LIGHTING AND RECEPTACLE SYSTEMS MAKING ALL CONNECTIONS TO THE LIGHTING FIXTURES, RECEPTACLES, APPARATUS AS SHOWN ON THE ENGINEERS' DRAWINGS.
14. THE COMPLETE POWER SYSTEM SHALL BE INSTALLED AND TESTED, MAKING ALL CONNECTIONS TO THE EQUIPMENT AND APPARATUS AS SHOWN ON THE ENGINEERS' DRAWINGS.
15. SEISMIC REQUIREMENTS ARE SITE SPECIFIC. CONTRACTOR SHALL DETERMINE WHETHER THE SITE IS IN A SEISMIC ZONE.
16. CONTRACTOR SHALL BE RESPONSIBLE FOR THE SEISMIC REQUIREMENTS AS SPECIFIED IN SECTION 26 05 48.00 10 SEISMIC PROTECTION FOR ELECTRICAL EQUIPMENT AND THE UNIFIED FACILITIES CRITERIA (UFC) 3-310-04 SEISMIC DESIGN FOR BUILDINGS.

ABBREVIATIONS

1PH	SINGLE PHASE
1P	SINGLE POLE
2/C	TWO-CONDUCTOR
3/C	THREE-CONDUCTOR
3PH	THREE PHASE
4/C	FOUR-CONDUCTOR
4W	FOUR WIRE
A/C UNIT	AIR CONDITIONING UIT
A/E	ARCHITECT/ENGINEER
AAP	ALARM ANNUNCIATOR PANEL
AC	ALTERNATING CURRENT OR ARMORED
ACC	ACCESSIBLE
ADDL	ADDITIONAL
ADJ	ADJACENT
ADO	AUTOMATIC DOOR OPENER
AF	AMP FRAME
AFC	AUTOMATIC FREQUENCY CONTROL
AFF	ABOVE FINISHED FLOOR
AFG	ABOVE FINISHED GRADE
AH	AMPERE HOUR
AHJ	AUTHORITY HAVING JURISDICTION
AIC	AMPERE INTERRUPTING CAPACITY
ALT	ALTERNATE
AMB	AMBIENT
AMP OR A	AMPERE
ARCH	ARCHITECT
ASC	AMPS SHORT CIRCUIT
AT	AMPERE TRIP
ATS	AUTOMATIC TRANSFER SWITCH
AUTO	AUTOMATIC
AV	AUDIO VISUAL
BAT	BATTERY
BC	BARE COPPER
BD	BOARD
BFF	BELOW FINISH FLOOR
BIL	BASIC INSULATION LEVEL
BLDG	BUILDING
BPIP	BOILER PLANT INSTRUMENTATION PANEL
BARKER	BREAKER
BYP	BY PASS
C OR CD	CONDUIT
CAB	CABINET
CALC	CALCULATION
CAP	CAPACITY
CAT	CATALOG
CATV	COMMUNITY ANTENNA TELEVISION
CCR	CONTROL CONTRACTOR
CCTV	CLOSED CIRCUIT TELEVISION
CDA	CANDELA
CD	CONSTRUCTION DOCUMENTS
CF	CONTRACTOR FURNISHED
CF/CI	CONTRACTOR FURNISHED/CONTRACTOR INSTALLED
CF/OI	CONTRACTOR FURNISHED/OWNER INSTALLED
CFE	CONTRACTOR FURNISHED EQUIPMENT
CHW	CHILLED WATER
CHWP	CHILLED WATER PUMP
CKT	CIRCUIT
CKT BARKER	CIRCUIT BREAKER
CLF	CURRENT LIMITING FUSE
CLG	CEILING
CMU	CONCRETE MASONRY UNIT
COAX	COAXIAL CABLE
COMM	COMMUNICATION
CONC	CONCRETE
CONT	CONTINUE
CONTR	CONTRACTOR
COORD	COORDINATE
CPT	CONTROL POWER TRANSFORMER
CRI	COLOR RENDERING INDEX
CT	CURRENT TRANSFORMER
CTV	CABLE TELEVISION
CU	COPPER
CU FT	CUBIC FEET
CUR	CURRENT
DB	DIRECT BURIAL
DC	DIRECT CURRENT
DCP	DIMMER CONTROL PANEL
DEG C	DEGREE CELSIUS
DEG F	DEGREE FAHRENHEIT
DEMO	DEMOLITION
DIAG	DIAGRAM
DISC	DISCONNECT
DISTR	DISTRIBUTION
DISTR PNL	DISTRIBUTION PANEL
DMR SW	DIMMER SWITCH
DN	DOWN
DPDT	DOUBLE POLE, DOUBLE THROW
DPST	DOUBLE POLE, SINGLE THROW
DRSW	DOOR SWITCH
DS	DISCONNECT SWITCH
DWG	DRAWINGS
EC	EMPTY CONDUIT
EG	EQUIPMENT GROUND
EL	ELEVATION
ELEC	ELECTRICAL
ELEV	ELEVATOR
EMCP	EMERGENCY MONITORING CONTROL PANEL
EMER	EMERGENCY
EMI	ELECTROMAGNETIC INTERFERENCE
EMT	ELECTRICAL METALLIC TUBING
ENCL	ENCLOSURE
EPO	EMERGENCY POWER OFF
EPRF	EXPLOSION PROOF
ESMT	EASEMENT
EWC	ELECTRIC WATER COOLER
EWH	ELECTRIC WATER HEATER
FA	FIRE ALARM
FAAP	FIRE ALARM ANNUNCIATOR PANEL
FABL	FIRE ALARM BELL
FABX	FIRE ALARM BOX
FACP	FIRE ALARM CONTROL PANEL
FC	FOOT CANDLE
FIXT	FIXTURE
FLA	FULL LOAD AMPS
FLEX	FLEXIBLE METALLIC CONDUIT
FLT	FLOOD LIGHT
FLUOR	FLUORESCENT
FOUTT	TELEPHONE FLOOR OUTLET
FP	FIRE PROTECTION
FT	FEET
FU SW	FUSED SWITCH
FVNR	FULL VOLTAGE NON-REVERSING
FVR	FULL VOLTAGE REVERSING
GND	GROUND
GEN	GENERATOR
GFCI	GROUND FAULT CIRCUIT INTERRUPTER
GTB	GROUND TERMINAL BOX
GEC	GROUND ELECTRODE CONDUCTOR
HID	HIGH INTENSITY DISCHARGE
HOA	HAND-OFF-AUTOMATIC
HP	HORSEPOWER
HT	HEIGHT
HZ	HERTZ
IESNA	ILLUMINATION ENGINEERING SOCIETY OF NORTH AMERICA
IMC	INTERMEDIATE METAL CONDUIT
INC	INCANDESCENT
IR	INFRARED
J-BOX	JUNCTION BOX
KV	KILOVOLT
KVA	KILOVOLT AMPERE
KVAH	KILOVOLT AMPERE PER HOUR
KVAR	KILOVOLT AMPERE PER HOUR
KW	KILOWATT
KWH	KILOWATT HOUR
KWHM	KILOWATT HOUT METER
LED	LIGHT EMITTING DIODE
LF	LINEAR FEET
LM	LUMEN
LP	LIGHT POLE
LPS	LOW PRESSURE SODIUM
LRA	LOCKED ROTOR AMPS
LTCP	LOCAL TEMPERATURE CONTROL PANEL
LTG	LIGHTING
LTG PNL	LIGHTING PANEL
LV	LOW VOLTAGE
MATV	MASTER ANTENNA TELEVISION
MAX	MAXIMUM
MB	MAIN BREAKER
MC	METAL CLAD
MCA	MINIMUM CIRCUIT AMPS
MCB	MAIN CIRCUIT BREAKER
MCC	MOTOR CONTROL CENTER
MDP	MAIN DISTRIBUTION PANEL
MECH	MECHANICAL
MG	MOTOR GENERATOR
MH	MANHOLE
MIN	MINIMUM
MOCP	MAXIMUM OVER CURRENT PROTECTION
MLO	MAIN LUGS ONLY
MTD	MOUNTED
MTG	MOUNTING
MTS	MANUAL TRANSFER SWITCH
MV	MEDIUM VOLTAGE
MVA	MEGAVOLT AMPS
MW	MEGAWATT
NA	NOT APPLICABLE
NEC	NATIONAL ELECTRICAL CODE
NEMA	NATIONAL ELECTRICAL MANUFACTURERS ASSOCIATION
NEUT OR N	NEUTRAL
NFPA	NATIONAL FIRE PROTECTION ASSOCIATION
NIC	NOT IN CONTRACT
NL	NIGHT LIGHT
NO	NORMALLY OPEN
NS	NO SCALE
NTS	NOT TO SCALE
OL	OVERLOAD
P	POLE
PA	PUBLIC ADDRESS
PB	PANELBOARD
PEC	PHOTOELECTRIC CELL
PED	PEDESTAL
PEND	PENDENT
PF	POWER FACTOR
PH	PHASE
PNL	PANEL
POD	POWER OPERATED DAMPER
POS	POINT OF SERVICE
PT	POTENTIAL TRANSFORMER
PTRV	POWER TYPE ROOF VENTILATION
PVC	POLYVINYL CHLORIDE (PLASTIC)
PWR	POWER
RCP	REFLECTED CEILING PLAN
REC	RECESSED
RECP	RECEPTACLE
RGS	RIGID GALVANIZED STEEL
RM	ROOM
RMS	ROOT MEAN SQUARE
REQD	REQUIRED
SCC	SHORT CIRCUIT CAPACITY
SES	SERVICE ENTRANCE SECTION
SD	SMOKE DETECTOR
SF	SQUARE FOOT
SHT	SHEET
SI	INTERNATIONAL SYSTEM OF UNITS
SPEC	SPECIFICATION
SPST	SINGLE POLE, SINGLE THROW
SURF	SURFACE
SW	SWITCH
SWBD	SWITCHBOARD
TC	TIME CLOCK
TEL	TELEPHONE
TP	TWISTED PAIR
TPS	TWISTED PAIR SHIELDED
TTB	TELEPHONE TERMINAL BOARD
TV	TELEVISION
TYP	TYPICAL
UFD	UNDERFLOOR DUCT
UL	UNDERWRITERS LABORATORY
UON	UNLESS OTHERWISE NOTED
UPS	UNINTERRUPTIBLE POWER SUPPLY
UTIL	UTILITY
V	VOLT
VA	VOLT-AMPERE
VAR	VOLT-AMPERE REACTIVE
VFD	VARIABLE FREQUENCY DRIVE
VPS	VACUUM PRESSURE SWITCH
W	WATT OR WIRE
WH	WATT HOUR
WM	WATT METER
WP	WEATHERPROOF
XLP	CROSS LINKED POLYETHYLENE
XFMR	TRANSFORMER
ZSC	LIMIT SWITCH CLOSED
ZSO	LIMIT SWITCH OPEN

PRELIMINARY - NOT FOR CONSTRUCTION

REV	DATE	BY	SUB	APP	DESCRIPTION

DESIGNED M. ESTAFANOUS
DRAWN M. ESTAFANOUS
CHECKED B. CRAWFORD
IN CHARGE D. WHEELER
DATE 05 DEC 2009

AFGHAN NATIONAL SECURITY FORCE
Comprehensive Plan for Facilities Development
MINISTRY OF INTERIOR (MoI) - AFGHAN NATIONAL POLICE
PROVINCIAL FIRE STATIONS
Wood Stove Kitchen
Legend, Abbreviations & Gen. Notes

SCALE AS SHOWN
PROJECT NO. 6151-08-0328
B_E000

J:\6151-08-0328 Afghanistan\Task 32.20 COMMON BUILDINGS\CAD\B_E000 Legend Abbreviations and general notes.dwg 12/03/2009 4:29pm mseestafanous

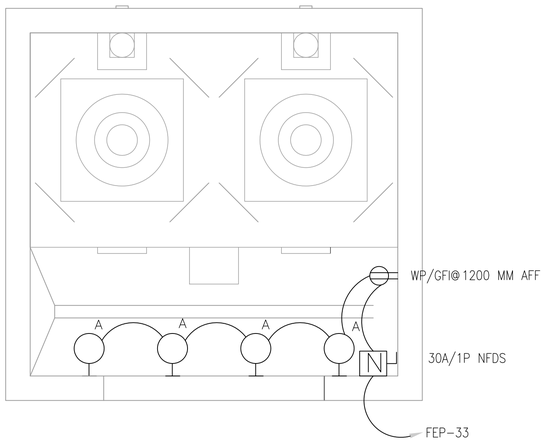

ELECTRICAL PLAN

SCALE 1:25

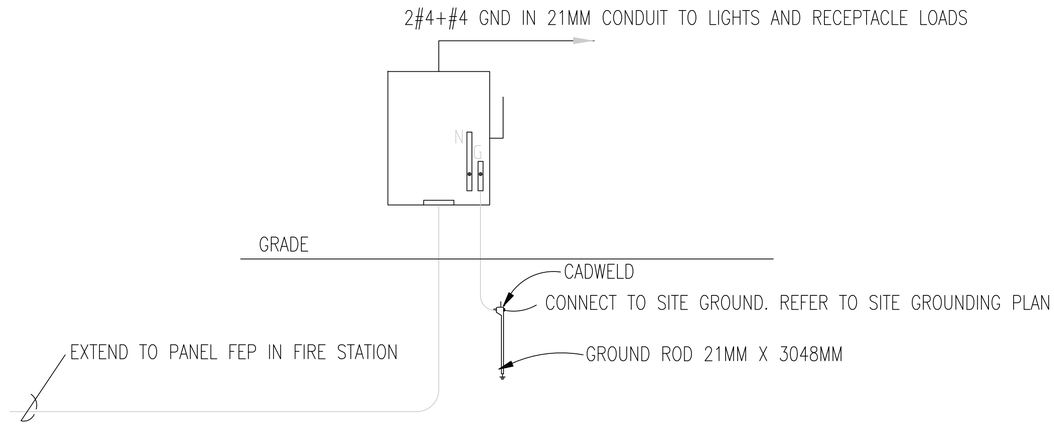

POWER RISER DIAGRAM

LIGHTING FIXTURE SCHEDULE

MARK	LAMPS	VOLTAGE	FIXTURE DISCRIPTION	MOUNTING	NOTES
A	1-100MH	220	HID FLOOD LIGHT. ALUMINUM HOUSING TEMPERED GLASS LENS. DARK BRONZE COLOR . ENCLOSE3D AND GASKETED. HPF BALLAST.	BRACKET	SEE NOTE 1.

NOTE 1.
MOUNT TWO TYPE A FIXTURES TO POINT UP FOR INDIRECT LIGHTING AND TWO TO POINT DOWN AT COOKING SURFACE.

PRELIMINARY - NOT FOR CONSTRUCTION

DESCRIPTION

REV DATE BY SUB APP

DESIGNED L. TAYLOR
DRAWN L. TAYLOR
CHECKED B. CRAWFORD
IN CHARGE D. WHEELER
DATE 05 DEC 2009

AFGHAN NATIONAL SECURITY FORCE
Comprehensive Plan for Facilities Development

MINISTRY OF INTERIOR (MoI) - AFGHAN NATIONAL POLICE
PROVINCIAL FIRE STATIONS

Wood Stove Kitchen
Electrical Plans, Schedules & Details

SCALE AS SHOWN

PROJECT NO. 6151-08-0328

B_E100

J:\6151-08-0328 Afghanistan\Task 32.20 COMMON BUILDINGS\CAD\B_E100 COMMON WOOD BURNING KITCHEN ELECTRICAL PLANS AND DETAILS.dwg 12/03/2009 4:37pm syelliams

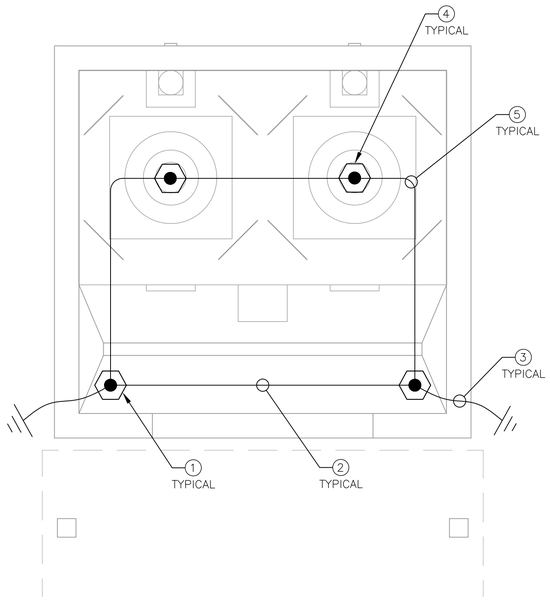

WOOD STOVE KITCHEN ROOF PLAN
LIGHTNING PROTECTION SYSTEM
1
B_E101
SCALE 1:25

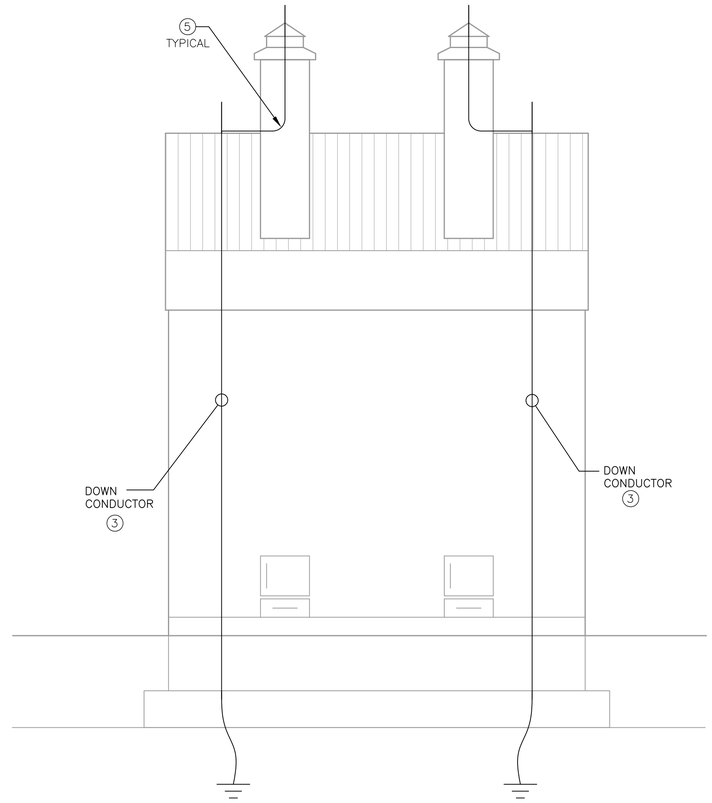

WOOD STOVE KITCHEN ELEVATION
LIGHTNING PROTECTION SYSTEM
2
B_E101
SCALE 1:25

GENERAL NOTES:

1. SEE SHEET B_E000 FOR LEGEND, ABBREVIATIONS AND GENERAL NOTES.
2. SEE SITE GROUNDING DESIGN.
3. CLASS I COMPONENTS SHALL APPLY FOR THE WOOD STOVE KITCHEN STRUCTURE, HEIGHT IS NOT MORE THAN 75 FEET (23M).
4. ALL LIGHTNING PROTECTION CONDUCTORS SHALL BE FASTENED NOT MORE THAN 914.4MM (3 FEET) MAXIMUM SPACING.
5. CONDUCTORS SHALL INTERCONNECT ALL AIR TERMINALS AND SHALL FORM A TWO-WAY PATH FROM EACH AIR TERMINAL HORIZONTALLY OR DOWNWARD TO CONNECTORS WITH GROUND RODS.
6. THE INSTALLATION OF THE LIGHTNING PROTECTION SYSTEM SHALL MEET THE REQUIREMENTS OF NATIONAL FIRE PROTECTION ASSOCIATION 780 AND UNDER WRITERS LAB UL96/96A.
7. THE TIP OF AN AIR TERMINALS SHALL NOT BE LESS THAN 254MM (10 INCHES) LONG ABOVE THE OBJECT TO BE PROTECTED WHEN THE INTERVAL BETWEEN AIR TERMINALS IS NOT MORE THAN 6M (20 FEET).
8. AT LEAST TWO DOWN CONDUCTORS SHALL BE INSTALLED.

KEY NOTES:

1. AIR TERMINAL SHALL BE 12.7MMX457 MM (1/2" X 18") ALUMINUM, 90 DEGREES VERTICAL.
2. MAIN CONDUCTORS SHALL BE# A28 ALUMINUM ROOF CONDUCTOR.
3. #A28 ALUMINUM DOWN CONDUCTORS SHALL BE CONNECTED TO #32S COPPER DOWN CONDUCTOR AT LEAST 457MM (18") ABOVE GRADE LEVEL. BIMETALLIC CONNECTORS WILL BE USED.
4. AIR TERMINALS SHALL BE PROVIDED ON THE CHIMNEY SO THAT NO CORNER IS MORE THAN 610MM (2 FEET) FROM AIR TERMINAL..
5. RADIUS OF BEND SHALL NOT BE LESS THAN 203 MM (8 INCHES).

PRELIMINARY - NOT FOR CONSTRUCTION

REV	DATE	BY	SUB	APP	DESCRIPTION

DESIGNED M. ESTAFANOUS
DRAWN M. ESTAFANOUS
CHECKED B. CRAWFORD
IN CHARGE D. WHEELER
DATE 05 DEC 2009

AFGHAN NATIONAL SECURITY FORCE
Comprehensive Plan for Facilities Development
MINISTRY OF INTERIOR (MoI) - AFGHAN NATIONAL POLICE
PROVINCIAL FIRE STATIONS
Wood Stove Kitchen
Lightning Protection System

SCALE
AS SHOWN

PROJECT NO.
6151-08-0328

B_E101

J:\6151-08-0328 Afghanistan\Task 32.20 COMMON BUILDINGS\CAD\B_E101 Lightning Protection System.dwg 12/03/2009 4:39pm swilliams

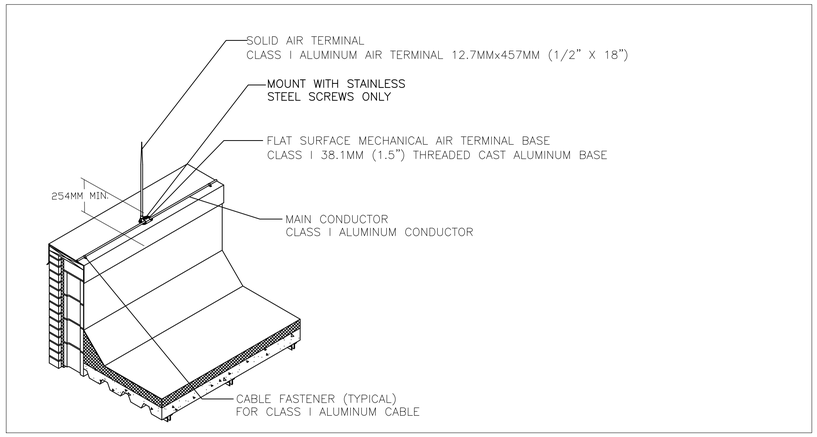

AIR TERMINAL DETAIL

SCALE: NONE

1 / B_E102

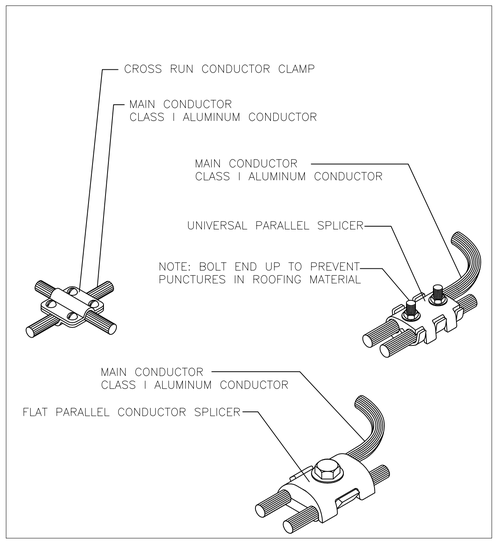

CABLE CLAMPS & SPLICERS

SCALE: NONE

2 / B_E102

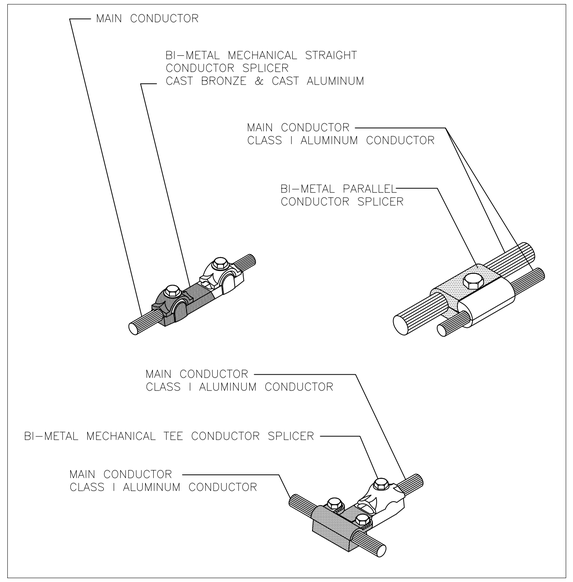

CABLE CLAMPS & SPLICERS

SCALE: NONE

3 / B_E102

PRELIMINARY - NOT FOR CONSTRUCTION

REV	DATE	BY	SUB	APP	DESCRIPTION

DESIGNED M. ESTAFANOUS
DRAWN M. ESTAFANOUS
CHECKED B. CRAWFORD
IN CHARGE D. WHEELER
DATE 05 DEC 2009

AFGHAN NATIONAL SECURITY FORCE
Comprehensive Plan for Facilities Development

MINISTRY OF INTERIOR (MoI) - AFGHAN NATIONAL POLICE
PROVINCIAL FIRE STATIONS

Wood Stove Kitchen
Details

SCALE
AS SHOWN

PROJECT NO.
6151-08-0328

B_E102

J:\6151-08-0328 Afghanistan\Task 32.20 COMMON BUILDINGS\CAD\B_E102 Details.dwg 12/03/2009 4:40pm sywilliams

SHEET LIST TABLE

Sheet Number	Sheet Title
01 FIRE STATION BUILDING	
01-G-001	INDEX SHEET
01-A-001	SECOND FLOOR LIFE SAFETY PLAN
01-A-002	SECOND FLOOR FIRE SAFETY
01-A-101	FIRST FLOOR PLAN
01-A-102	SECOND FLOOR PLAN
01-A-111	FIRST FLOOR REFLECTED CEILING PLAN
01-A-112	SECOND FLOOR REFLECTED CEILING PLAN
01-A-151	ROOF PLAN & DETAILS
01-A-201	ELEVATIONS
01-A-301	BUILDING SECTIONS
01-A-401	ENLARGED KITCHEN FLOOR PLAN & ELEV
01-A-451	STAIRS SECTION & ENLARGED PLAN
01-A-501	WALL SECTIONS
01-A-502	WALL SECTIONS
01-A-550	DETAILS
01-A-601	ROOM FINISH SCHEDULE
01-A-602	DOOR & WINDOW SCHEDULE
01-A-701	DETAILS
01-A-702	DETAILS
01-A-703	MISCELLANEOUS DETAILS
01-S-01	GENERAL NOTES
01-S-02	GENERAL NOTES
01-S-03	GENERAL NOTES
01-S-04	GENERAL NOTES
01-S-05	FOUNDATION AND SLAB PLAN
01-S-06	SECOND FLOOR PLAN
01-S-07	ROOF FRAMING PLAN
01-S-08	CMU WALL, SECTIONS & DETAILS
01-S-09	CMU WALL, SECTIONS & DETAILS
01-S-10	BEAM & COLUMN DETAILS
01-S-11	BEAM & COLUMN DETAILS
01-S-12	ROOF TRUSS DETAILS
01-S-13	ROOF TRUSS DETAILS
01-S-14	MAINTENANCE PIT DETAILS
01-S-15	STAIR DETAILS
01-S-16	MISCELLANEOUS DETAILS
01-S-17	ROOF DETAILS

SHEET LIST TABLE

Sheet Number	Sheet Title
01 FIRE STATION BUILDING CONT'D	
01-M-101	FIRE STATION FIRST FLOOR MECHANICAL HVAC PLAN
01-M-102	FIRE STATION SECOND FLOOR MECHANICAL HVAC PLAN
01-M-501	FIRE STATION MECHANICAL HVAC DETAILS
01-M-601	FIRE STATION MECHANICAL HVAC SCHEDULES
01-P-101	FIRE STATION FIRST FLOOR WASTE & VENT PLUMBING PLAN
01-P-102	FIRE STATION SECOND FLOOR WASTE & VENT PLUMBING PLAN
01-P-103	FIRE STATION FIRST FLOOR DOMESTIC WATER & COM. AIR PLUMBING PLAN
01-P-104	FIRE STATION SECOND FLOOR DOMESTIC WATER PLUMBING PLAN
01-P-501	FIRE STATION PLUMBING DETAILS
01-P-502	FIRE STATION PLUMBING DETAILS
01-P-503	FIRE STATION PLUMBING DETAILS II
01-P-601	FIRE STATION WASTE AND VENT RISER DIAGRAM – TOILET ROOMS
01-P-602	FIRE STATION DOMESTIC WATER RISER DIAGRAM – TOILET ROOMS
01-P-603	FIRE STATION PLUMBING SCHEDULES AND LEGEND
01-EG101	LIGHTING PROTECTION PLAN
01-EG501	GROUNDING DETAIL
01-EL101	FIRST FLOOR LIGHTING PLAN
01-EL102	SECOND FLOOR LIGHTING PLAN
01-EL601	LIGHTING FIXTURE SCHEDULE & DETAILS
01-EP101	FIRST FLOOR POWER PLAN
01-EP102	FIRST FLOOR POWER PLAN – MECHANICAL
01-EP103	SECOND FLOOR POWER PLAN
01-EP104	SECOND FLOOR POWER PLAN – MECHANICAL
01-EP501	POWER RISER – DIAGRAM
01-EP601	PANEL SCHEDULE
01-EP602	PANEL SCHEDULE

SHEET LIST TABLE

Sheet Number	Sheet Title
02 WOOD STOVE KITCHEN	
02-A-101	WOOD STOVE KITCHEN FLOOR PLAN
02-A-102	WOOD STOVE KITCHEN ELEVATIONS & SECTIONS
02-A-103	DFAC ENLARGED KITCHEN ANNEX AND DETAILS
02-A-501	WOOD STOVE KITCHEN DETAILS
02-A-601	WOOD STOVE KITCHEN FINISH SCHEDULE
02-S01	GENERAL NOTES
02-S02	GENERAL NOTES
02-S03	GENERAL NOTES
02-S04	GENERAL NOTES
02-S05	ROOF FRAMING PLAN
02-S06	SECTIONS & DETAILS
02-S07	SECTIONS & DETAILS
02-S08	TYPICAL DETAILS

04 TRAINING TOWER	
04-A-101	TRAINING TOWER FLOOR PLANS
04-A-201	TRAINING TOWER ELEVATIONS
04-A-301	TRAINING TOWER SECTION
04-A-501	TRAINING TOWER DOOR & WINDOW DETAILS
04-A-601	TRAINING TOWER DOOR & WINDOW SCHEDULE
04-A-602	TRAINING TOWER FINISH SCHEDULE
04-S-01	GENERAL NOTES
04-S-02	GENERAL NOTES
04-S-03	GENERAL NOTES
04-S-04	GENERAL NOTES
04-S-05	FOUNDATION PLAN & SECOND FLOOR FRAMING PLAN
04-S-06	THIRD FLOOR FRAMING PLAN & ROOF FLOOR FRAMING PLAN
04-S-07	SLAB & WALL SECTIONS
04-S-08	BEAM & COLUMN DETAILS
04-S-09	BEAM & COLUMN DETAILS
04-S-10	BEAM & COLUMN DETAILS
04-S-11	BEAM & COLUMN SECTIONS
04-S-12	MISCELLANEOUS DETAILS
04-S-13	ROOF DETAILS
04-E-101	TRAINING TOWER ELECTRICAL PLAN

US ARMY CORPS OF ENGINEERS
AFGHANISTAN ENGINEER DISTRICT

MARK	DESCRIPTION	DATE	APPR.	MARK	DESCRIPTION	DATE	APPR.

U.S. ARMY CORPS OF ENGINEERS
AFGHANISTAN DISTRICT
APO AE 09356

DESIGNED BY: .
DWN BY: .
CKD BY: .
SUBMITTED BY: DEL MUNDO
DATE: JUNE 20, 2011
SOLICITATION NO.: .
CONTRACT NO.: .
PLOT SCALE: .
PLOT SCALE: .
FILE NAME: .
SIZE: .
FILE NAME: .

MS 11 FIREHOUSE
STANDARD DESIGN
VARIOUS LOCATIONS

INDEX SHEET

SHEET REFERENCE
00-G-001

R:\ENGINEERING\000 FY 2011 RFPS IN PROGRESS\ANP\STANDARD TO DEVELOP FIRE STATION\MACTEC\FIRE STATION CAD 2'

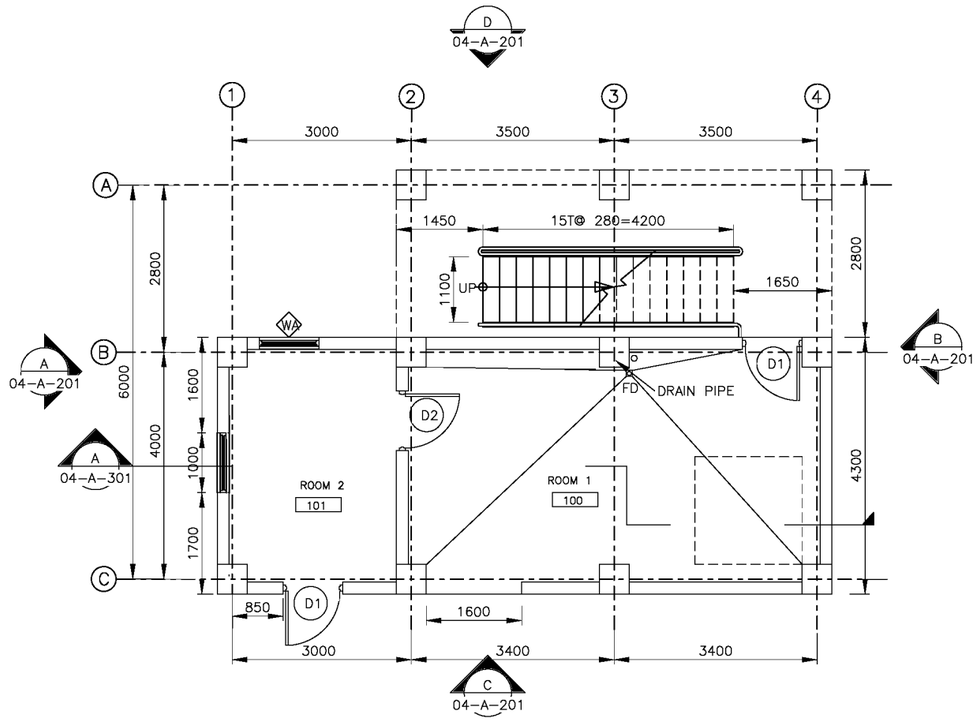

4 1ST FLOOR PLAN

1:50

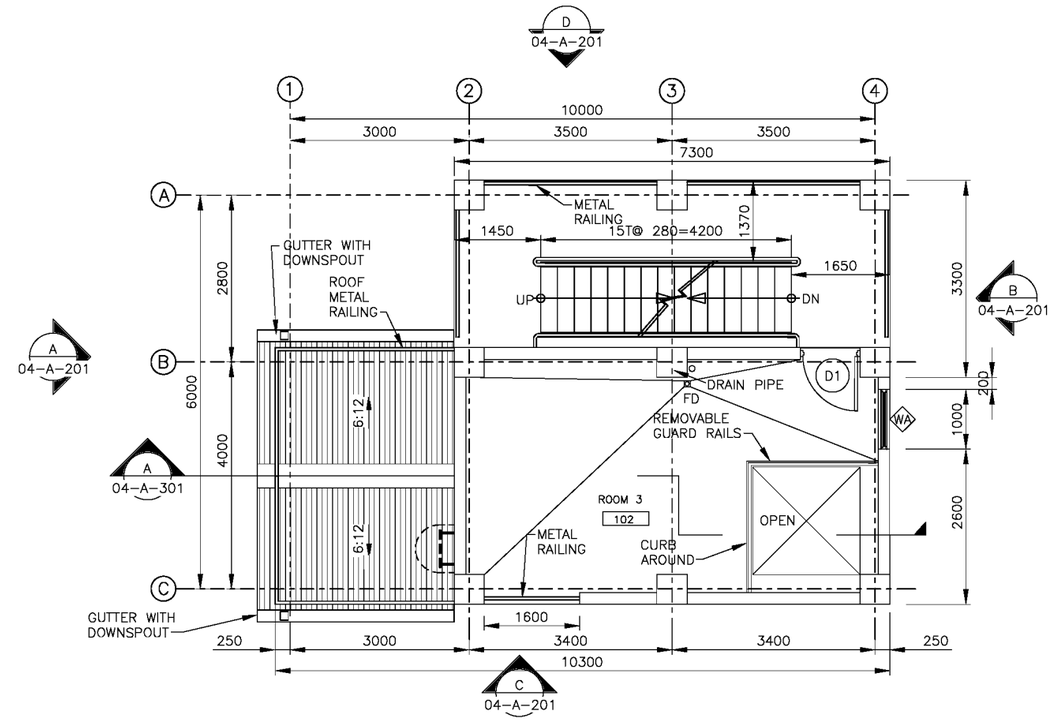

3 2ND FLOOR PLAN

1:50

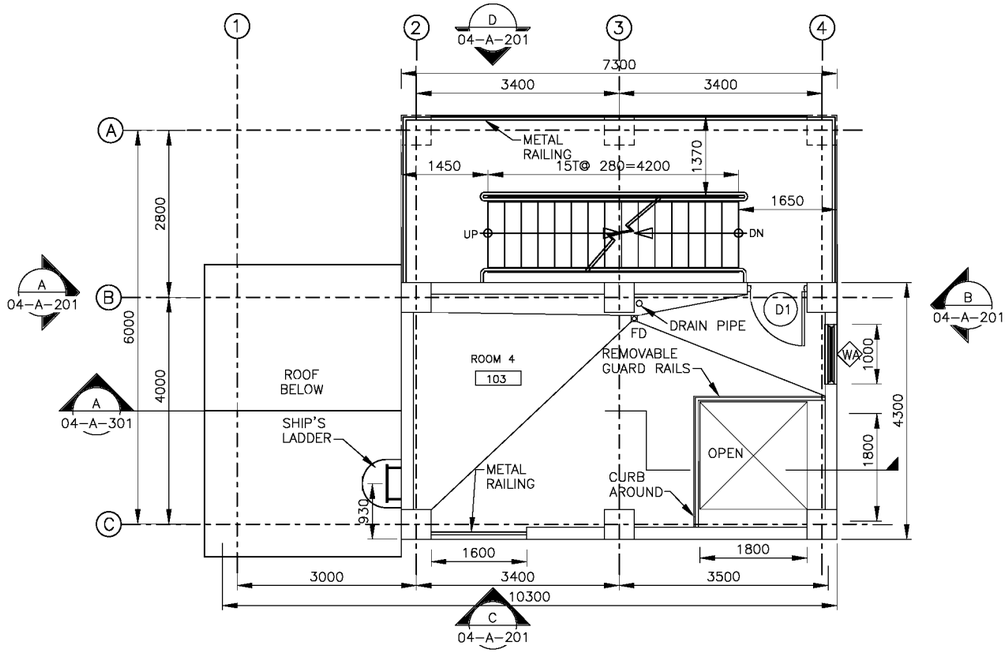

2 3RD FLOOR PLAN

1:50

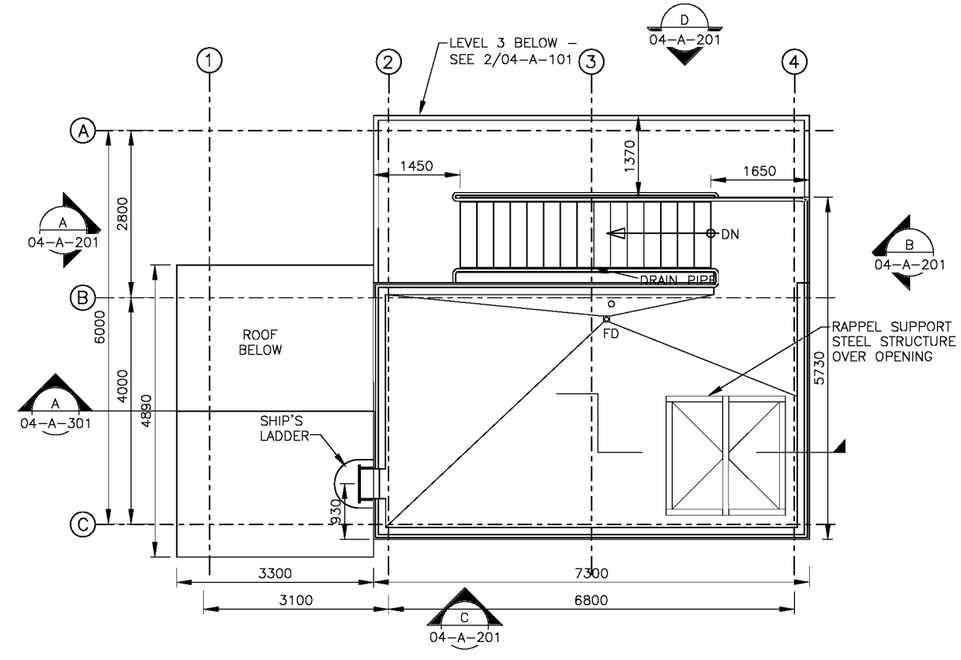

1 ROOF PLAN

1:50

US ARMY CORPS
OF ENGINEERS
AFGHANISTAN
ENGINEER DISTRICT

MARK	DESCRIPTION	DATE	APPR.	MARK	DESCRIPTION	DATE	APPR.

DESIGNED BY:
DWN BY: DEL MUNDO
CKD BY:
SUBMITTED BY:
DATE:
SOLICITATION NO.:
CONTRACT NO.:
FILE NAME:
PLOT SCALE: 1:1
PLOT SCALE:
SIZE: 1" = 100'
FILE NAME:

U.S. ARMY CORPS OF ENGINEERS
AFGHANISTAN DISTRICT
APO AE 09358

MS 11 FIREHOUSE
STANDARD DESIGN
VARIOUS LOCATIONS

TRAINING TOWER FLOOR PLANS

SHEET
REFERENCE
04-A-101

R:\ENGINEERING\000 FY 2011 RFPS IN PROGRESS\ANP\STANDARD TO DEVELOP FIRE STATION\MACTEC\FIRE STATION CAD 2\04-TRAINING TOWER\04-ARCH\04-A-101 - LAYOUT 1.DWG

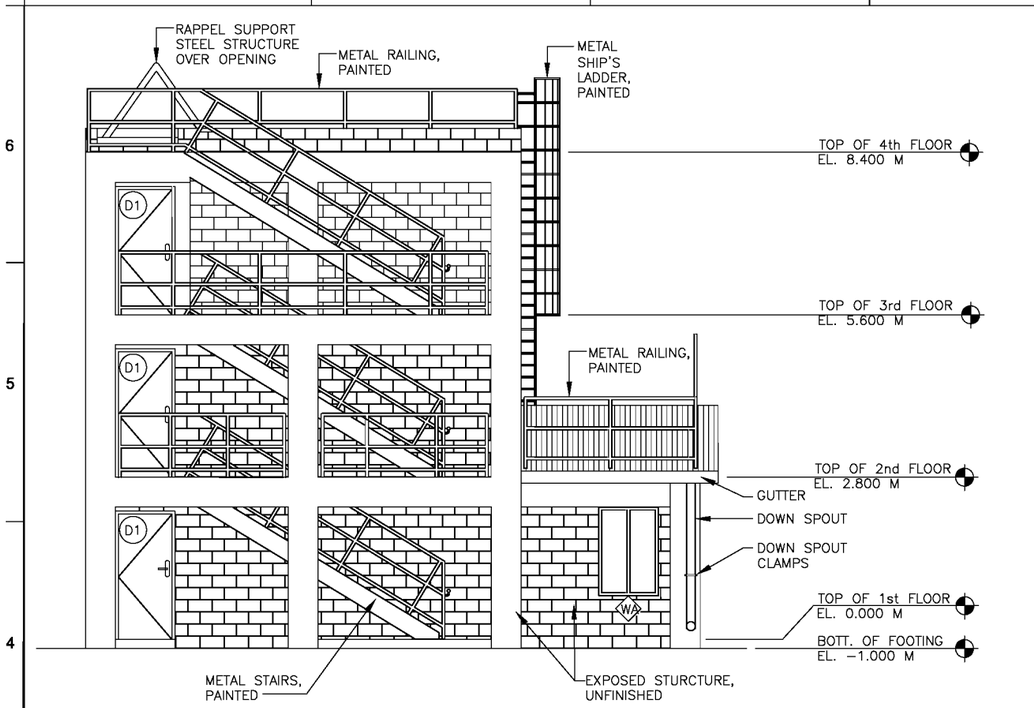

D ELEVATION
1:50

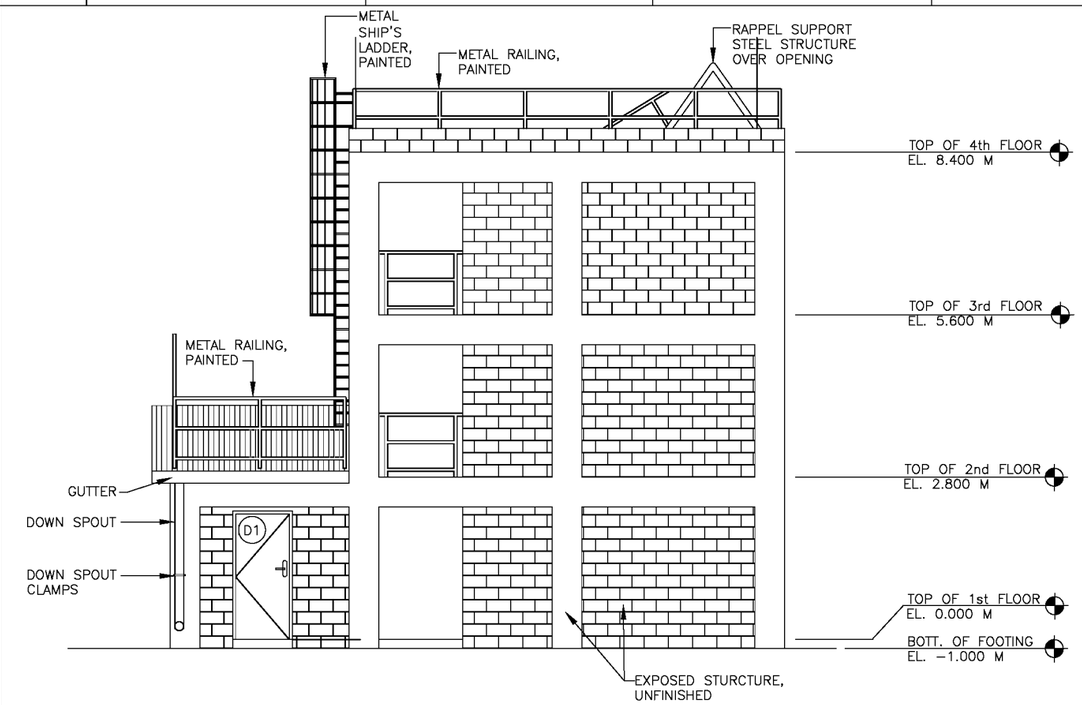

C ELEVATION
1:50

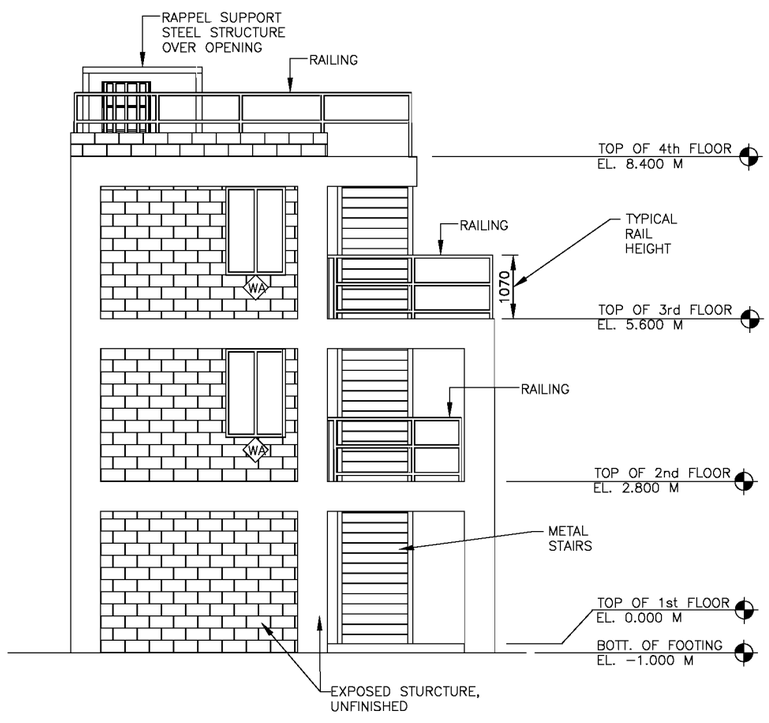

B ELEVATION
1:50

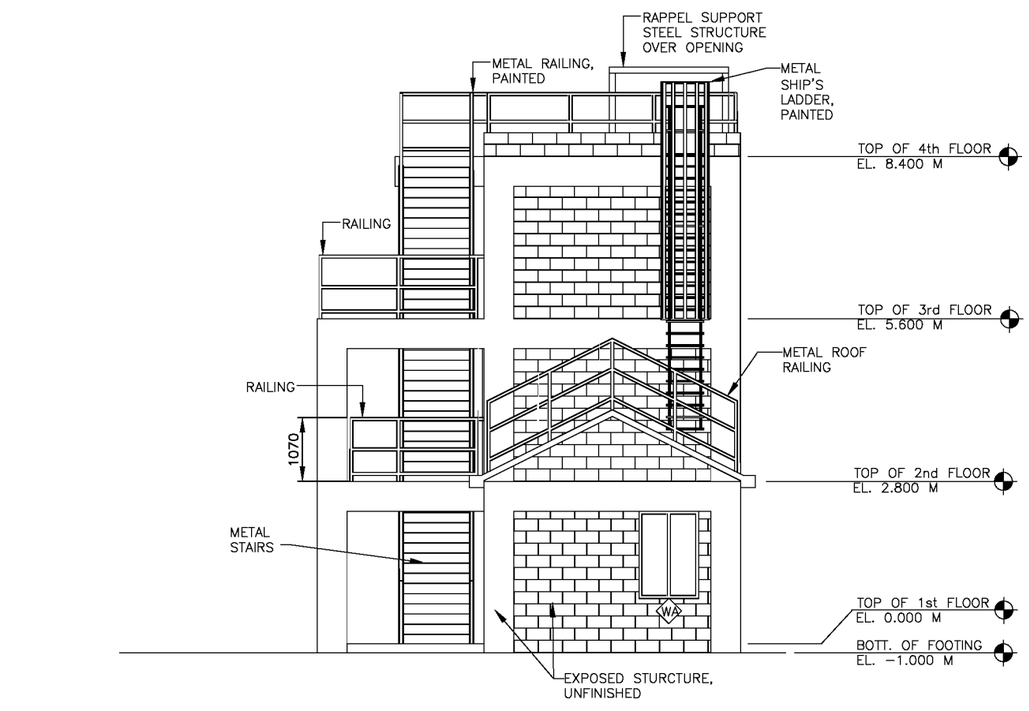

A ELEVATION
1:50

US ARMY CORPS OF ENGINEERS AFGHANISTAN ENGINEER DISTRICT

MARK	DESCRIPTION	DATE	APPR.	MARK	DESCRIPTION	DATE	APPR.

DESIGNED BY: DWN BY: CKD BY: DEL MUNDO SUBMITTED BY: PLOT SCALE: 1" = 10'0" PLOT DATE: SIZE: FILE NAME: DATE: SOLICITATION NO.: CONTRACT NO.: FILE NAME:

U.S. ARMY CORPS OF ENGINEERS
AFGHANISTAN DISTRICT
APO AE 09356

MS 11 FIREHOUSE
STANDARD DESIGN
VARIOUS LOCATIONS

TRAINING TOWER ELEVATION

SHEET REFERENCE
04-A-201

R:\ENGINEERING\000 FY 2011 RFPS IN PROGRESS\ANP\STANDARD TO DEVELOP FIRE STATION\MACTEC\FIRE STATION CAD 2\04-TRAINING TOWER\04-ARCH\04-A-201 - LAYOUT 1.DWG

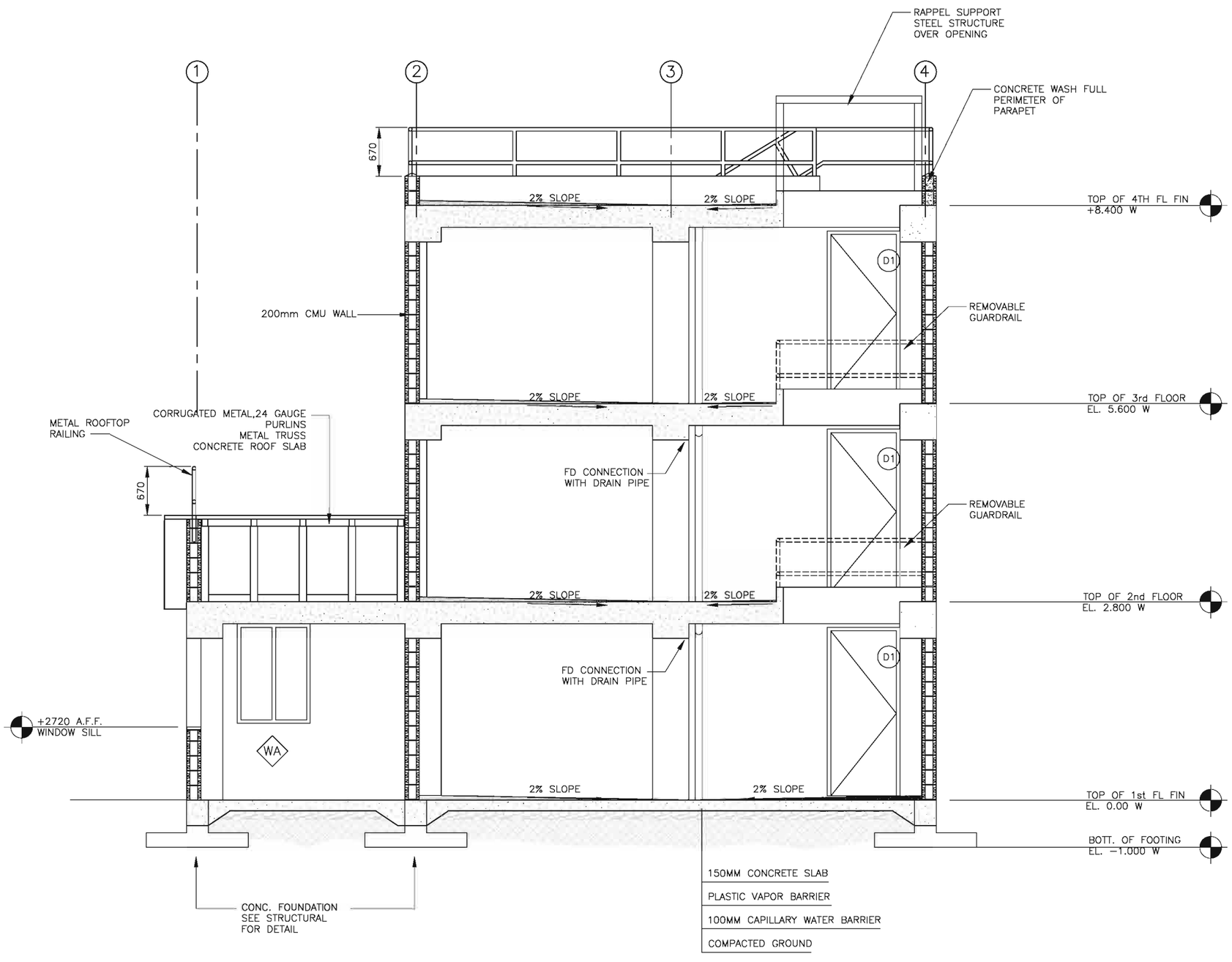

A SECTION
1:30

US ARMY CORPS OF ENGINEERS
AFGHANISTAN ENGINEER DISTRICT

MARK	DESCRIPTION	DATE	APPR.	MARK	DESCRIPTION	DATE	APPR.

DESIGNED BY: | DATE:
DWN BY: DEL MUNDO | CKD BY: | SOLICITATION NO.:
SUBMITTED BY: | CONTRACT NO.:
PLOT SCALE: 1" = 100' | PLOT SCALE: | FILE NAME:
SIZE: | FILE NAME:

U.S. ARMY CORPS OF ENGINEERS
AFGHANISTAN DISTRICT
APO AE 09358

MS 11 FIREHOUSE
STANDARD DESIGN
VARIOUS LOCATIONS

TRAINING TOWER SECTION

SHEET REFERENCE
04-A-301

R:\ENGINEERING\000 FY 2011 RFPS IN PROGRESS\ANP\STANDARD TO DEVELOP FIRE STATION\MACTEC\FIRE STATION CAD 2\04-TRAINING TOWER\04-ARCH\04-A-301 - LAYOUT 1.DWG

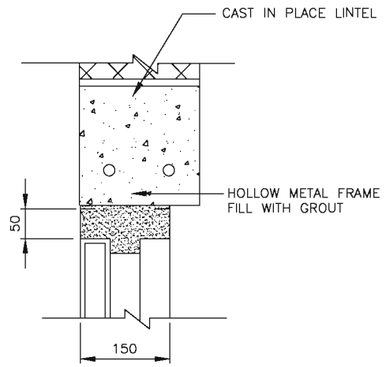

I EXTERIOR DOOR HEADER DETAIL
SCALE: N.T.S.

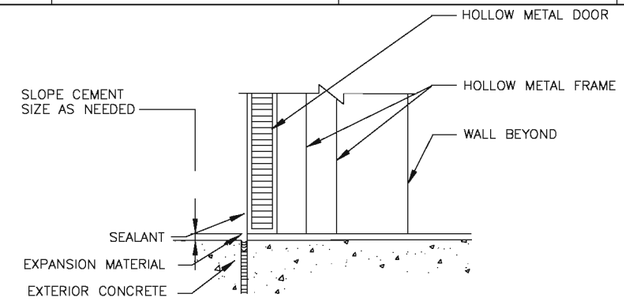

H EXTERIOR DOOR THRESHOLD
SCALE: N.T.S.

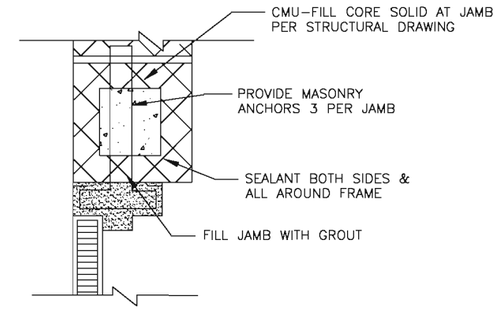

G EXTERIOR DOOR JAMB
SCALE: N.T.S.

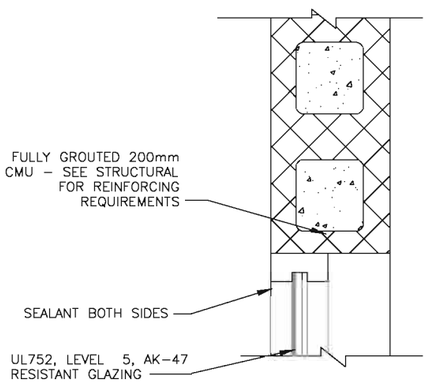

F WINDOW JAMB
SCALE: N.T.S.

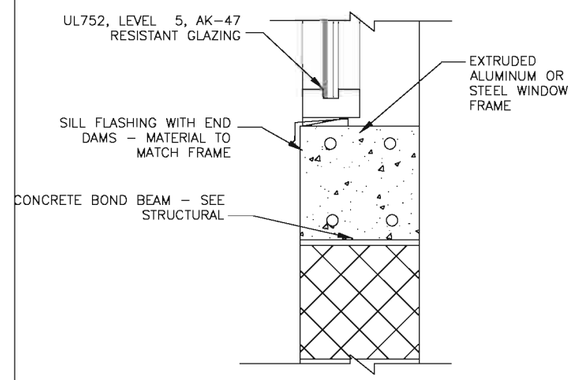

E WINDOW SILL
SCALE: N.T.S.

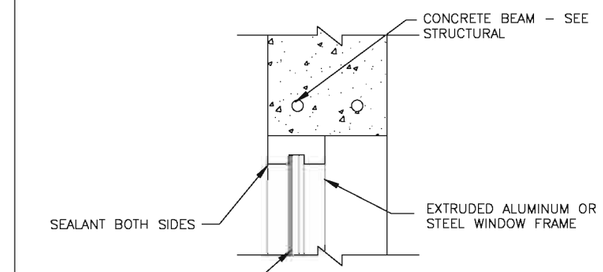

WINDOW TYPE NOTES:

1. WINDOW FRAME SHOULD BE EXTRUDED ALUMINUM OR STEEL
2. ALL WINDOW AND GLAZING SHALL MEET THE REQUIREMENTS UL752, LEVEL 5 RESISTANCE FOR PROTECTION AGAINST AK–47 FIRE.

D WINDOW HEADER
SCALE: N.T.S.

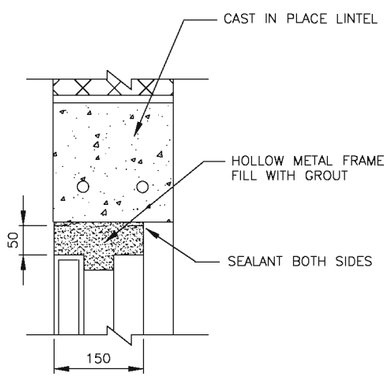

C INTERIOR DOOR HEADER DETAIL
SCALE: N.T.S.

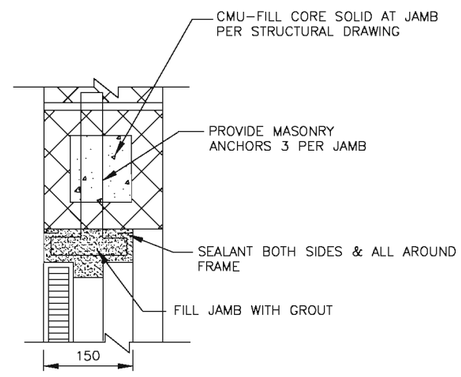

B INTERIOR DOOR JAMB
SCALE: N.T.S.

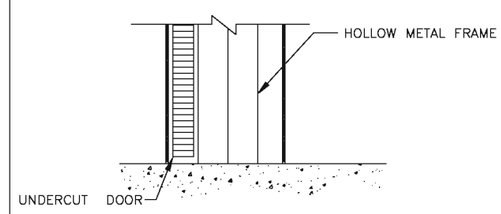

A INTERIOR DOOR THRESHOLD
SCALE: N.T.S.

US ARMY CORPS OF ENGINEERS
AFGHANISTAN
ENGINEER DISTRICT

MARK	DESCRIPTION	DATE	APPR.	MARK	DESCRIPTION	DATE	APPR.

DESIGNED BY: | DATE: JUNE 20, 2011
DWN BY: | CKD BY: | SOLICITATION NO.:
DEL MUNDO | CONTRACT NO.:
SUBMITTED BY:
PLOT SCALE: | PLOT SCALE: | FILE NAME:
P.L.T. 1:1000
SIZE: | FILE NAME:

U.S. ARMY CORPS OF ENGINEERS
AFGHANISTAN DISTRICT
APO AE 09356

MS 11 FIREHOUSE
STANDARD DESIGN
VARIOUS LOCATIONS

TRAINING TOWER DOOR &
WINDOW DETAILS

SHEET REFERENCE
04-A-501

R:\ENGINEERING\000 FY 2011 RFPS IN PROGRESS\ANP\STANDARD TO DEVELOP FIRE STATION\MACTEC\FIRE STATION CAD 2'

DOOR SCHEDULE

DOOR No.	DIMENSION			DOOR TYPE	DOOR MAT.	FRAME MAT.	HARDWARE	THRESHOLD	FIRE RATED	MATERIAL
	WIDTH	HGT.	THK.							
D–1	914	2150	45	1	MTL	HM	HW–1	ALUM	–	EXTERIOR DOOR WITH STRIPPING
D–2	914	2150	45	2	WD	HM	HW–2	ALUM	–	WOOD DOOR WITH PAINT

WINDOW SCHEDULE

WINDOW NUMBER	DIMENSION		WINDOW MAT.	WINDOW TYPE	OPENING SYSTEM	DESCRIPTION
	WIDTH	HEIGHT				
WA	1000	1480	ALUM	A	SLIDER	5MM GLASS ALUM CONSTRUCTION AND FIXED INSECT METAL SCREEN

E DOOR & WINDOW SCHEDULE

HARDWARE NOTES:

HW–1
1–1/2 PR HINGES
1 EA LOCKSET F04, OFFICE DOOR LOCK W/LEVERS, GRADE 1
1 EA THRESHOLD, J32130
1 SET WEATHERSEALS
1 SET SILENCERS

HW–2
1–1/2 PR HINGES
1 EA LOCKSET F02, PRIVACY LOCK W/LEVERS, GRADE 1
1 SET SILENCERS

DOOR TYPE NOTES:

1. EXTERIOR DOOR, INCLUDING GLAZING, SHALL MEET THE REQUIREMENTS OF UL752, LEVEL 5 RESISTANCE FOR PROTECTION AGAINST AK–47 FIRE.
2. DOORS AND FRAME COLORS SHALL MATCH ADJACENT WALL COLORS AS SELECTED BY THE CONTRACTING OFFICE.
3. HARDWARE SHALL BE HEAVY DUTY. COMMERCIAL GRADE, STAINLESS STEEL WITH A MATTE FINISH. THERE SHALL BE THREE HINGES AT EACH DOOR, AT LEAST 200/16/5MM, WITH BALL BERING , SECURED BY THREADED PINS.
4. FRAMES SHALL BE MOUNTED AND ADJUSTED IN ACCORDANCE WITH MANUFACTURER'S INSTRUCTIONS. FRAMES SHALL BE FASTENED WITH MINIMUM OF THREE FASTENING POINTS PER SIDE AT REGULAR INTERVALS.
5. ALL DOOR FRAMES SHALL BE FITTED WITH DOOR SILENCERS.
6. DIMENSIONS SHOWN ON DOOR SCHEDULE ARE BASED UPON MODULAR MASONRY (OR ROUGH OPENING), HEIGHT OF 2300MM FOR STANDARD PERSONAL DOORS. CONTRACTOR SHALL COORDINATE WITH DOOR SUPPLIER TO ENSURE THAT DIMENSIONS OF DOORS AND FRAMES PROVIDED ARE COMPATIBLE WITH DOOR OPENING DIMENSIONS.
7. ALL DOOR LOCKS SHALL MORTISED.
8. LOCK FUNCTION F04–OFFICE DOOR LOCK– LATCH BOLT OPERATED BY LEVER FROM EITHER SIDE EXCEPT WHEN OUTSIDE LEVER IS MADE INOPERATIVE BY A STOP OR MECHANICAL MEANS OTHER THAN A KEY. WHEN OUTSIDE LEVER IS LOCKED, LATCH BOLT MAY BE RETRACTED BY KEY FROM OUTSIDE OR BY ROTATING INSIDE LEVER.
9. LOCK FUNCTION F02– PRIVACY LOCK–LATCH BOLT OPERATED BY LEVER EITHER SIDE. DEADBOLT OPERATED BY TURN FROM INSIDE AND BY EMERGENCY KEY FROM OUTSIDE

NOTES:

1. FOR HARDWARE SET DESCRIPTION SEE SPECIFICATIONS SECTION 08710 PARAGRAPH 3.5.
2. CONTRACTOR TO USE LOCALLY FABRICATED DOORS AND WINDOWS.

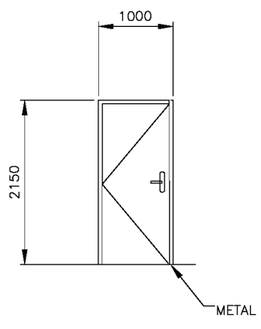

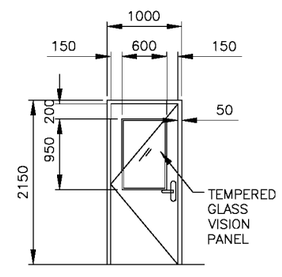

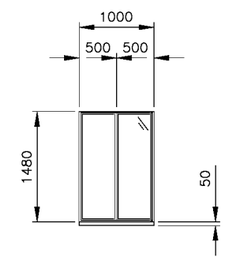

D GENERAL NOTES

C DOOR (D–1) N.T.S

B DOOR (D–2) N.T.S

A WINDOW N.T.S

US ARMY CORPS OF ENGINEERS AFGHANISTAN ENGINEER DISTRICT

MARK	DESCRIPTION	DATE	APPR.	MARK	DESCRIPTION	DATE	APPR.

DESIGNED BY: DATE:
DWN BY: DEL MUNDO CKD BY: SOLICITATION NO.:
SUBMITTED BY: CONTRACT NO.:
PLOT SCALE: 1" = 100' PLOT SCALE: FILE NAME:
SIZE: FILE NAME:

U.S. ARMY CORPS OF ENGINEERS
AFGHANISTAN DISTRICT
APO AE 09356

MS 11 FIREHOUSE
STANDARD DESIGN
VARIOUS LOCATIONS

TRAINING TOWER DOOR & WINDOW SCHEDULE

SHEET REFERENCE
04-A-601

R:\ENGINEERING\000 FY 2011 RFPS IN PROGRESS\ANP\STANDARD TO DEVELOP FIRE STATION\MACTEC\FIRE STATION CAD 2\04-TRAINING TOWER\04-ARCH\04-A-601 – LAYOUT 1.DWG

ROOM FINISH SCHEDULE

ROOM NO.	ROOM NAME	FLOOR MATERIAL	BASE MATERIAL	WALL MATERIAL	WALL FINISH	CEILING MATERIAL	CEILING FINISH	CEILING HEIGHT	DOOR & WINDOW FINISH MATERIAL	DOOR & WINDOW FINISH FINISH	REMARKS
100	ROOM 1	TT–1	MT–1	P	P–7	P	P–3	2570	MTD	P–4	
101	ROOM 2	TT–1	MT–1	P	P–7	P	P–3	2570	WD	P–5	
102	ROOM 3	CONC/S	–	P	P–7	P	P–3	2570	MTD	P–4	
103	ROOM 4	CONC/S	–	P	P–7	P	P–3	2570	MTD	P–4	

GENERAL FINISH NOTES/TYPICAL COLORS & MATERIAL SELECTION

FLOORING

CONC/S CONCRETE SEALED AND HARDENED WITH BROOM FINISH

TERRAZZO TILE (TT)
TT–1 AFGHAN LOCAL PRODUCT; 300mm X 300mm WITH SPECIAL POLISH

ENTRY MAT (MAT)
MAT–1 REESE PERFEC CLEAN ALUMINUM HINGE MAT; RECESSED FRAME WITH NO. 546 CARPET INSERTS, METAL FINISH: MIL ALUMINUM; CARPET INSERTS: MAUVE 8616 (NOT USED)

CERAMIC TILE (CT)
CT–1 R.A.K CERAMIC UAE; 300mm X 300mm UNPOLISHED PORCELAIN
CT–2 AFGHAN LOCAL PRODUCT; 300mm X 600mm POLISHED PORCELAIN
CT–3 AFGHAN LOCAL PRODUCT; 600mm X 1000mm UNPOLISHE PORCELAIN
CT–4 R.A.K CERAMIC UAE;#4/700RBEM–10 200mm X 200mm UNPOLISHE PORCELAIN
CT–5 R.A.K CERAMIC UAE;# 600CPAR–2 200mm X 300mm UNPOLISHE PORCELAIN

BASE TREATMENTS

MARBLE TILE (MT)
MT–1 AFGHAN LOCAL PRODUCT; 75mm X 100mm CROSS SHEEN PORCELAIN MARBLE TILE COVE BASE; #AXXX EMPRESS BLACK

WALL FINISHES

PAINT/EPOXY PAINT (P/EP):
P–1 BRIGHTO PAINTS; # 42 SAND STONE SUPER EMULSION
P–2 BRIGHTO PAINTS; # 127 CAMEO FOR EXTERNAL USE WEATHER SHIELD
P–3 BRIGHTO PAINTS; # X LATEX FOR WATER BASE WALL AND CEILING
P–4 BRIGHTO METALLIC ENAMEL; # 3 LIGHT GRAY SUITABLE FOR USE ON ALL TYPES OF INTERIOR AND EXTERIOR WOOD AND METAL SURFACES.
P–5 BRIGHTO METALLIC ENAMEL; # 42 ASH WHITE SUITABLE FOR USE ON ALL TYPES OF INTERIOR AND EXTERIOR WOOD AND METAL SURFACES.
P–6 BRIGHTO PAINTS; # 12 OFF WHITE
P–7 BRIGHTO PAINTS; #70 ROSE WHITE
P–8 BRIGHTO PAINTS; #69 LILY WHITE
P–9 BRIGHTO PAINTS; #40 PEACH CREAM

CERAMIC TILE (CT):
CT–4 R.A.K CERAMIC UAE;#4/700RBEM–10 200mm X 200mm UNPOLISHE PORCELAIN
CT–5 R.A.K CERAMIC UAE; # 600CPAR–2 200mm X 300mm UN–POLISHE

CEILING FINISHES

PAINTED CEILINGS (P)
P–1 BRIGHTO PAINT; # 12 OFF WHITE

MISCELLANEOUS SURFACES

TOILET PARTITIONS (TP)
NOT USED

SIGNAGE (S)
S–1 BACKGROUND COLOR: MATCH P–3, TEXT: WHITE

INTERIOR DOOR AND WINDOW FRAMES
P–4 BRIGHTO ; #3 LIGHT GRAY

INTERIOR WOOD DOORS AND TRIM
WHITE OAK, CLEAR FINISH, NO STAIN

MOVEABLE WALL (MW)
NOT USED

FINISH SCHEDULE ABBREVIATIONS

AFF	ABOVE FINISHED FLOOR	LAM	PLASTIC LAMINATE
ALSF	ALUMINUM STOREFRONT SYSTEM	MANUF	BY MANUFACTURER
		MAT	ENTRY MAT
ATC	ACOUSTIC TILE CEILING	MR	MOISTURE RESISTANT
CB	CEMENT BOARD	MTL	METAL PANEL
CONC/S	CONCRETE SEALED AND HARDENED WITH BROOM FINISH	MW	MOVABLE WALL
		NA	NOT APPLICABLE
		P	PAINT
CPT	CARPET	PREFIN	PREFINISHED
CT	CERAMIC TILE	RB	RESILIENT BASE
EP	EPOXY PAINT	RBP	RACQUETBALL PANEL
EXPOSED	EXPOSED STRUCTURE	VCT	VINYL COMPOSITION TILE
GN	GENERAL NOTE	MT	MARBLE TILE
GWB	GYPSUM WALL BOARD	MTD	METALLIC DOOR
HM	HOLLOW METAL	WD	WOOD DOOR
		TT	TERRAZZO TILE
		PVC	POLYVINYL

GENERAL NOTES

1. THE MANUFACTURER'S NAMES AND THEIR PRODUCTS REFERENCED ONLY INDICATE THE COLOR, TEXTURE, AND PATTERN REQUIRED FOR THE MATERIALS LISTED. THE PRODUCTS FURNISHED SHALL MEET THE COLOR, TEXTURE, AND PATTERN INDICATED AS WELL AS THE MATERIAL QUALITY AND PERFORMANCE SPECIFIED IN THE APPLICABLE TECHNICAL SPECIFICATIONS. THE USE OF MANUFACTURER'S NAMES AND PRODUCTS DO NOT PRECLUDE THE USE OF OTHER MANUFACTURER'S PRODUCTS OF APPROVED EQUAL COLOR, TEXTURE, AND/OR PATTERN IF ALL OTHER REQUIREMENTS ARE MET.
2. ALL VISIBLE GRILLES, DIFFUSERS, AND OTHER MECHANICAL RELATED FINISH OPENING DEVICES INCLUDING FIRE ALARMS SHALL BE PAINTED TO MATCH COLOR OF ADJACENT SURFACE.
3. REFER TO APPROPRIATE ARCHITECTURAL DRAWINGS AND DETAILS TO PROPERLY ASSESS THE FULL EXTENT OF WORK REQUIRED. SPECIFICALLY REFER TO THE REFLECTED CEILING PLANS AND BUILDING SECTIONS TO DETERMINE HEIGHTS OF REQUIRED WALL MATERIALS, SPECIAL CONDITIONS AND STRUCTURES, ETC.
4. REFER TO EXTERIOR ELEVATIONS FOR EXTERIOR FINISH SELECTIONS.
5. INFILL FLOOR AT SLAB RECESSES NOT TO RECEIVE CERAMIC TILE WITH CONCRETE LEVEL WITH ADJACENT FLOOR SURFACES PRIOR TO APPLYING FLOOR FINISH.
6. WALL AND CEILING GWB SURFACES SHALL BE PAINTED WITH FLAT FINISH, TRIM SHALL BE SEMI–GLOSS.
7. INSTALL PLASTIC BUMPER RAILS AND CORNER GUARDS AT MAIN CORRIDORS
8. INTERIOR SURFACE OF EXTERIOR METAL DOORS AND FRAMES SHOULD COMPLY WITH P–4

NOTE:
NOT ALL FINISHES APPLY TO ALL BUILDINGS.

US ARMY CORPS OF ENGINEERS AFGHANISTAN ENGINEER DISTRICT

MARK	DESCRIPTION	DATE	APPR.	MARK	DESCRIPTION	DATE	APPR.

DESIGNED BY: DWN BY: DEL MUNDO CKD BY: SUBMITTED BY: DATE: SOLICITATION NO.: CONTRACT NO.: PLOT SCALE: 1" = 100' PLOT SCALE: SIZE: FILE NAME: FILE NAME:

U.S. ARMY CORPS OF ENGINEERS
AFGHANISTAN DISTRICT
APO AE 09356

MS 11 FIREHOUSE
STANDARD DESIGN
VARIOUS LOCATIONS

TRAINING TOWER FINISH SCHEDULE

SHEET REFERENCE
04-A-602

R:\ENGINEERING\000 FY 2011 RFPS IN PROGRESS\ANP\STANDARD TO DEVELOP FIRE STATION\MACTEC\FIRE STATION CAD 2\04-TRAINING TOWER\04-ARCH\04-A-602 - LAYOUT 1.DWG

STRUCTURAL ABBREVIATIONS:

ACI	AMERICAN CONCRETE INSTITUTE
AISC	AMERICAN INSTITUTE OF STEEL CONSTRUCTION
ALT	ALTERNATE
ASTM	AMERICAN SOCIETY FOR TESTING AND MATERIALS
AWS	AMERICAN WELDING SOCIETY
ARCH	ARCHITECTURAL
B	BOTTOM
BLDG	BUILDING
BOTT	BOTTOM
℄	CENTER LINE
CFMF	COLD FORM METAL FRAME
CFS	COLD FORMED STEEL
CIP	CAST IN PLACE
CIPL	CAST-IN-PLACE LINTEL
CJ	CONTROL JOINT
CLG	CEILING
CLR	CLEAR
CMU	CONCRETE MASONRY UNIT
COEFF	COEFFICIENT
COL	COLUMN
CONC	CONCRETE
CONT	CONTINUOUS
COORD	COORDINATE
CSJ	CONSTRUCTION JOINT
CTJ	CONTROL JOINT
DIA	DIAMETER
DIAG	DIAGONAL
DIM	DIMENSION
DWG	DRAWING
DWL	DOWEL
EA	EACH
ELEC	ELECTRICAL
ELEV	ELEVATION
EMBED	EMBEDMENT
EQUIV	EQUIVALENT
ETC	ET CETERA
E.W.	EACH WAY
EXT	EXTERIOR
FTG	FOOTING
GA	GAUGE
HORIZ	HORIZONTAL
HRS	HOURS
IBC	INTERNATIONAL BUILDING CODE
INT	INTERIOR
Kg	KILOGRAM
KIP	KIPS (1 KIP = 1,000 POUNDS)
kN	KILONEWTON
kPa	KILOPASCAL
L#	ANGLE (# INDICATES SIZE)
LLV	LONG LEG VERTICAL
M	METER
MAX	MAXIMUM
MBM	METAL BUILDING MANUFACTURER
MBMA	METAL BUILDING MANUFACTURERS ASSOCIATION
MECH	MECHANICAL
MFG	MANUFACTURER
MID	MIDDLE
MIN	MINIMUM
MISC	MISCELLANEOUS
MM	MILLIMETER
MPa	MEGAPASCAL
MTL	METAL
MWFRS	MAIN WIND FORCE RESISTING SYSTEM
N	NEWTON
N	NORTH
N/A	NOT APPLICABLE
#	NUMBER SYMBOL FOR REBAR SIZE
NTS	NOT TO SCALE
O.C.	ON CENTER
OPNG	OPENING
ℙ or PL	PLATE
PRE-ENG	PRE-ENGINEERED
REINF	REINFORCED
REQ'D	REQUIRED
SIM	SIMILAR
SPECS	SPECIFICATIONS
STD	STANDARD
STRUCT	STRUCTURAL
SW	SHEAR WALL
T	TOP
T/	TOP OF
T/ELEV	TOP ELEVATION
T&B	TOP AND BOTTOM
THK	THICK
TM	TRADE MARK
TYP	TYPICAL
UFC	UNIFIED FACILITIES CRITERIA
UON	UNLESS OTHERWISE NOTED
VERT	VERTICAL
W	WIDTH
W/	WITH

GENERAL NOTES

1.D THIS PROJECT HAS BEEN DESIGNED FOR THE WEIGHTS AND MATERIALS INDICATED ON THE SHEETS AND FOR THE LIVE LOADS INDICATED IN THE DESIGN CRITERIA. IT IS THE CONTRACTOR'S RESPONSIBILITY TO DETERMINE ALLOWABLE CONSTRUCTION LOADS AND TO PROVIDE PROPER DESIGN AND CONSTRUCTION OF FALSEWORK, FORMWORK, STAGING, BRACING, SHEETING AND SHORING, ETC.

1.1 COORDINATE THESE SHEETS WITH THE ARCHITECTURAL, MECHANICAL, ELECTRICAL, PLUMBING, AND CIVIL SHEETS. ALL DIMENSIONS SHOWN ON THE SHEETS ARE MILLIMETERS UNLESS NOTED OTHERWISE.

1.2 THE CONTRACTOR SHALL VERIFY AND COORDINATE ALL FLOOR AND ROOF OPENING SIZES AND LOCATIONS, EQUIPMENT PAD SIZES AND LOCATIONS, ANCHOR BOLT LAYOUTS, ETC WITH EQUIPMENT SELECTED. THE CONTRACTOR SHALL MAKE ANY REQUIRED MODIFICATIONS AT NO ADDITIONAL COST.

1.3 THE CONTRACTOR SHALL REFER TO THE ARCHITECTURAL, MECHANICAL, ELECTRICAL AND PLUMBING SHEETS FOR SLEEVES, CURBS, INSERTS OR OPENINGS, ETC. NOT HEREIN INDICATED.

1.4 SLAB OPENINGS SMALLER THAN 25Dmm DIA TO BE CORE DRILLED IN FIELD UON. SEE MECHANICAL, ELECTRICAL AND PLUMBING SHEETS FOR LOCATIONS OF THESE OPENINGS.

1.5 WORK NOT INCLUDED ON THE SHEETS BUT IMPLIED TO BE SIMILAR TO THAT SHOWN AT CORRESPONDING PLACES ELSEWHERE ON THE SHEETS SHALL BE REPEATED.

1.6 IN CASE OF CONFLICT BETWEEN THE NOTES, DETAILS AND SPECIFICATIONS THE MOST RIGID REQUIREMENTS SHALL GOVERN.

1.7 SEE ARCHITECTURAL SHEETS FOR LOCATIONS OF MASONRY AND DRYWALL NON-LOAD BEARING PARTITIONS. PROVIDE COMPRESSIBLE FIRESAFING AT TOP OF WALL AS REQUIRED BY ARCHITECTURAL SHEETS.

1.8 COORDINATE FINISHED FLOOR DATUM ELEVATION 0.Dm WITH THE CIVIL SHEETS.

2.D FOUNDATION NOTES

2.1 THE GEOTECHNICAL ANALYSIS FOR THIS PROJECT IS THE RESPONSIBILITY OF THE CONTRACTOR AWARDED THE WORK. DESIGN VALUES USED IN THE STRUCTURAL ANALYSIS OF THE BUILDINGS HEREIN INDICATED HAVE BEEN ASSUMED AND SHALL BE CONFIRMED AND VERIFIED AS PART OF THE GEOTECHNICAL INVESTIGATION. VALUES WHICH DO NOT MEET THE REQUIREMENTS INDICATED ON SHEET S2 SHALL BE IMMEDIATELY BROUGHT TO THE ATTENTION OF THE CONTRACTING OFFICER FOR CONSIDERATION AND DETERMINATION ON THE NEXT APPROPRIATE COURSE OF ACTION.

2.2 SEE THE SPECIFICATION FOR ADDITIONAL REQUIREMENTS TO THOSE OUTLINED IN THE GEOTECHNICAL INVESTIGATION FOR EXCAVATION AND PREPARATION OF THE FOUNDATION AND THE SLAB ON GRADE SUBGRADE INCLUDING COMPACTION PROCEDURES.

2.3 EXCAVATIONS FOR FOOTINGS SHALL HAVE THE SIDES AND BOTTOMS TEMPORARILY LINED WITH 0.25mm POLYETHYLENE IF PLACEMENT OF CONCRETE DOES NOT OCCUR WITHIN 24 HRS OF THE EXCAVATION OF THE FOOTING.

2.4 FOUNDATION CONDITIONS NOTED DURING CONSTRUCTION WHICH DIFFER FROM THOSE DESCRIBED IN THE GEOTECHNICAL REPORT SHALL BE REPORTED TO THE GENERAL CONTRACTOR BEFORE FURTHER CONSTRUCTION IS ATTEMPTED. SEE PROJECT SPECIFICATIONS.

2.5 NO FOOTINGS OR SLABS SHALL BE POURED INTO OR AGAINST SUBGRADE CONTAINING FREE WATER, FROST, ICE OR LOOSE MATERIAL. FROST DEPTH ASSUMED TO BE 8DOMM

2.6 ALL SLAB-ON-GRADE, TRENCH BOTTOMS AND OTHER ON-GRADE INTERIOR HORIZONTAL SURFACES SHALL BE PLACED OVER A 0.25mm VAPOR RETARDER OVER A 100mm #57 STONE WATER BARRIER PLACED ON SUBGRADE PROPERLY PREPARED IN ACCORDANCE WITH THE CONTRACT SPECIFICATIONS. (UON)

2.7 SEE PLUMBING, ELECTRICAL & CIVIL SHEETS FOR REQUIRED UNDERSLAB UTILITIES.

2.8 SEE ARCHITECTURAL SHEETS FOR ALL WATERPROOFING DETAILS AND MATERIALS.

2.9 IF UNDERMINING OF FOOTINGS OCCURS, FILL VOIDS WITH 15MPa CONCRETE. DO NOT ATTEMPT TO REPLACE AND RECOMPACT SOIL.

3.D CONCRETE

3.1 CONCRETE SHALL HAVE THE UNIT WEIGHT AND THE MINIMUM COMPRESSIVE STRENGTHS (f'c) AT 28 DAYS AS SHOWN IN THE CONCRETE MATERIALS SCHEDULE ON SHEET S3. SEE SPECIFICATIONS FOR ADDITIONAL INFORMATION. ENTRAIN AIR TO PRODUCE TOTAL AIR CONTENT ACCORDING TO THE SPECIFICATIONS FOR CONCRETE EXPOSED TO FREEZING TEMPERATURES (EXTERIOR FOOTINGS, SLAB TURNDOWNS, EXTERIOR SLABS AND SLABS-ON-GRADE, EXTERIOR RETAINING WALLS, AND EXTERIOR GRADE BEAMS.)

3.2 GROUT FOR BASE PLATES SHALL BE NON-SHRINKABLE GROUT AND SHALL HAVE A MINIMUM SPECIFIED COMPRESSIVE STRENGTH AT 28 DAYS OF 35MPa, UNLESS NOTED OTHERWISE.

3.3 NO CALCIUM CHLORIDE SHALL BE USED IN ANY CONCRETE.

3.4 MIXING, TRANSPORTING AND PLACING OF CONCRETE SHALL CONFORM TO ACI 301M-05

3.5 ALL CONCRETE WORK SHALL CONFORM TO THE REQUIREMENTS OF THE AMERICAN CONCRETE INSTITUTE (ACI) 318M MANUAL (metric), "BUILDING CODE REQUIREMENTS FOR REINFORCED CONCRETE", AND REQUIREMENTS OUTLINED IN THE CONTRACT SPECIFICATIONS. WHEN THERE IS A CONFLICT BETWEEN ACI AND THE SPECIFICATIONS, THE MORE STRINGENT SHALL GOVERN.

3.6 CHAMFER ALL EXPOSED EXTERNAL CORNERS OF CONCRETE WITH 2Dmm x45 DEGREE CHAMFER UON.

3.7 CONCRETE REINFORCEMENT BARS SHALL CONFORM TO ASTM A615M-96a, GRADE 42O. REINFORCING BARS SHALL NOT BE TACK WELDED, WELDED, HEATED OR CUT, UNLESS INDICATED ON THE CONTRACT DOCUMENTS. ALL LAP SPLICES SHALL BE CLASS "B" UON.

3.8 HORIZONTAL FOOTING AND HORIZONTAL WALL REINFORCEMENT SHALL BE CONTINUOUS AND SHALL HAVE 90 DEGREE BENDS AND EXTENSIONS, OR CORNER BARS OF EQUIVALENT SIZE LAPPED WITH A CLASS B TENSION SPLICE AT CORNERS AND INTERSECTIONS. TOP BAR CRITERIA SHALL APPLY IF 300mm OR MORE OF FRESH CONCRETE IS PLACED BELOW BAR.

3.9 SLABS-ON-GRADE SHALL HAVE CONSTRUCTION JOINTS OR CRACK CONTROL JOINTS AS SHOWN ON THE SHEETS. CONSTRUCTION JOINTS CAN BE USED AT CONTROL JOINT LOCATIONS AT CONTRACTORS OPTION. SEE SLAB PLANS & JOINT DETAILS FOR ADDITIONAL INFORMATION. FOR AREAS NOT SHOWN ON SHEETS, THE MAXIMUM SPACING OF CONSTRUCTION/ CRACK CONTROL JOINTS SHALL BE 4800mm

3.10 SEE SPECIFICATIONS FOR ALL WATERPROOFING/DAMPPROOFING REQUIREMENTS.

3.11 ALL CONCRETE REINFORCEMENT SHALL BE DETAILED, FABRICATED, LABELED, SUPPORTED, AND SPACED IN FORMS AND SECURED IN PLACE IN ACCORDANCE WITH THE PROCEDURES AND REQUIREMENTS OUTLINED IN THE LATEST EDITION OF THE "BUILDING CODE REQUIREMENTS FOR REINFORCED CONCRETE", ACI 318M, AND THE "MANUAL OF STANDARD PRACTICE FOR DETAILING REINFORCED CONCRETE STRUCTURES", ACI 315M, LATEST EDITION.

3.12 SHOP DRAWINGS SHOWING REINFORCING DETAILS, INCLUDING STEEL SIZES, SPACING AND PLACEMENT, SHALL BE SUBMITTED FOR REVIEW PRIOR TO FABRICATION.

3.13 ALL DOWELS SHALL MATCH SIZE AND NUMBER OF MAIN REINFORCING, UNLESS NOTED OTHERWISE ON SHEETS.

3.14 ADDITIONAL BARS SHALL BE PROVIDED AROUND ALL FLOOR AND WALL OPENINGS AS SHOWN ON THE SHEETS.

3.15 SEE ARCHITECTURAL SHEETS FOR TYPE AND LOCATION OF ALL FLOOR FINISHES.

3.16 THE CONTRACTOR SHALL COORDINATE ADDITIONAL WALL/SLAB OPENINGS NOT SHOWN ON STRUCTURAL SHEETS. SEE MECHANICAL, ELECTRICAL, PLUMBING AND CIVIL SHEETS.

3.17 UNLESS NOTED OTHERWISE, ALL CURBS SHALL BE REINFORCED WITH AT LEAST (1)-#12 CONTINUOUS AND #12 AT 300mm O.C. DOWELS TO STRUCTURE BELOW.

3.18 THE SUB-CONTRACTOR SHALL VERIFY ALL OPENINGS, PAD SIZES, AND ANCHOR BOLTS WITH EQUIPMENT SELECTED.

3.19 FOR ALL WALLS & PIERS, PROVIDE DOWELS INTO FOOTING AT EACH VERT REINF BAR, UON DOWEL SIZE SHALL BE SAME AS VERT REINF.

3.20 ALL DEFORMED BAR ANCHORS SHALL BE TRS NELSON DIVISION OR EQUAL 16mm DIA (UON) CONFORMING TO ASTM A-496M WITH A MINIMUM TENSILE STRENGTH OF 550 MPa. INSTALL ANCHORS IN ACCORDANCE WITH MANUFACTURERS RECOMMENDATIONS BY AUTOMATIC END WELDING AS INDICATED ON THE DRAWINGS. NO UNAUTHORIZED OR FIELD WELDING SHALL BE MADE WITHOUT AUTHORIZATION FROM THE MANUFACTURER.

3.21 ALL REINFORCING INDICATED TO BE WELDED SHALL BE IN ACCORDANCE WITH ASTM A706M. "LOW ALLOY STEEL DEFORMED BARS FOR CONCRETE REINFORCEMENT". ANY INSTALLATIONS USING MANUFACTURER'S EQUIPMENT SHALL BE PER MANUFACTURER'S RECOMMENDATIONS.

3.22 PROVIDE CONCRETE POUR STOPS OR FORMS AS REQUIRED FOR INSTALLATION OF ALL CONCRETE WORK.

3.23 PROVIDE ADDITIONAL (2)-#12 x 600mm REINFORCING BARS IN SLAB-ON-GRADE AT ALL RE-ENTRANT CORNERS. PLACE BARS AT MID-DEPTH OF SLAB WITH A CLEARANCE OF 50mm FROM CORNER UON.

4.D CONCRETE MASONRY

4.1 MASONRY CONSTRUCTION AND MATERIALS SHALL CONFORM TO ALL REQUIREMENTS OF THESE CONTRACT DOCUMENTS AND THE PROJECT SPECIFICATIONS.

4.2 THE SPECIFIED ULTIMATE COMPRESSIVE STRENGTH OF CONCRETE MASONRY (f'm) ON THE NET AREA IS A MINIMUM OF 10.4 MPa.

4.3 PROVIDE TWO #16 BARS CONTINUOUS IN ALL CMU AND CAST-IN-PLACE BOND BEAMS UON ON THE SHEETS. INTERMEDIATE BOND BEAMS SHALL BE CONTINUOUS AND SPACED AT A MAXIMUM OF 1200mm OC VERTICALLY. ALL BOND BEAMS SHALL BE A MINIMUM OF 200mm IN DEPTH WITH REINFORCING BEING CONTINUOUS AND HAVING STANDARD ACI HOOKS AT EACH END. PROVIDE STANDARD BAR SPLICES AS SPECIFIED.

4.4 FOR WALL REINFORCING, SEE MIN CMU WALL REINFORCING DETAIL ON SHEET S8.

4.5 CMU CELLS THAT REQUIRE VERTICAL REINFORCING BARS AS INDICATED ON THE CONTRACT DRAWINGS AND/OR SPECS SHALL HAVE REINF BAR PLACED IN CENTERS OF CMU CELLS AND CONTINUOUSLY GROUTED UON.

4.6 PROVIDE LADDER TYPE JOINT REINFORCEMENT AT 2DOmm FOR EXTERIOR & 40Dmm FOR INTERIOR ON CENTER MAXIMUM, UON MINIMUM ROD SIZE USED SHALL BE 9 GA. DEFORMED WIRE AND CONFORM TO ASTM A82M, UON.

4.7 PROVIDE CONTROL JOINTS AS INDICATED ON THE ARCHITECTURAL SHEETS.

4.8 GROUT FOR MASONRY SHALL BE NORMAL WEIGHT AND HAVE A MINIMUM COMPRESSIVE STRENGTH OF 25 MPa AT 28 DAYS. GROUT SHALL CONFORM TO ASTM C476M. GROUT LIFTS SHALL NOT EXCEED 14DDmm.

4.9 USE MORTAR TYPE S CONFORMING TO ASTM C27DM, SEE SPECIFICATIONS.

4.1D CONCRETE MASONRY UNITS SHALL BE NORMAL WEIGHT AND CONFORM TO ASTM C9DM.

4.11 ALL CMU CELLS, OPEN CAVITIES, AND AIR SPACES SHALL BE GROUTED. TO STOP FRAGMENTS FROM MORTAR BLAST

4.12 BOND BEAM REINFORCING SHALL BE DISCONTINUOUS AT CONTROL JOINTS (UON). MAXIMUM CONTROL JOINT SPACING SHALL BE AS INDICATED ON THE ARCHITECTURAL SHEETS.

4.13 CONTRACTOR SHALL COORDINATE LOCATION OF ALL OPENINGS SEE ARCH, MECH, ELEC, AND PLUMBING SHEETS. FOR SIZE AND LOCATION OF OPENINGS.

4.14 MASONRY WALLS SHALL NOT BE BACK FILLED PRIOR TO THE MORTAR AND GROUT ATTAINING THEIR RESPECTIVE MAXIMUM DESIGN STRENGTHS PER SPECIFICATIONS.

5.0 STEEL DECK

5.1 STEEL DECK SHALL BE ASTM A611M, GRADES C & D OR A653M STRUCTURAL QUALITY HAVING A MINIMUM YIELD STRENGTH OF 345 MPa FOR FLOOR DECK AND 228 MPa FOR ROOF DECK AS PER THE STEEL DECK INSTITUTE (SDI) DESIGN MANUAL.

5.2 STEEL DECK SHALL BE ERECTED IN ACCORDANCE WITH THE MANUFACTURER'S SPECIFICATIONS AND ERECTION LAYOUTS AND CONNECTED TO SUPPORTING MEMBERS AS INDICATED.

5.3 COMPOSITE FLOOR DECK

5.3.1 STEEL FLOOR DECK SHALL BE 51mm RIB HEIGHT, 18 GA HOT-DIP GALVANIZED (SDI TYPE 2VLI-18) UON.

5.3.2 FLOOR DECK SHALL HAVE THE FOLLOWING MINIMUM PROPERTIES:

	18 GAUGE
MOMENT OF INERTIA, Ip	$760mm^4/mm$ WIDTH
SECTION MODULUS (TOP OF DECK), Sn	$27.5mm^3/mm$ WIDTH
SECTION MODULUS (BOTT OF DECK) Sp	$27.8mm^3/mm$ WIDTH

5.3.3 FLOOR DECK SHALL BE FASTENED TO THE SUPPORTS AS INDICATED IN THE BOTTOM OF THE FLUTES USING A SDI 36/7 PATTERN. DECK SIDELAPS SHALL BE ATTACHED USING #10 SELF-TAPPING TEK SCREWS WITH A MINIMUM 3-SIDE LAP CONNECTIONS PER SPAN.

5.3.4 SUSPENDED CEILINGS, LIGHT FIXTURES, DUCTS, CONDUITS, PIPING OR OTHER UTILITIES SHALL NOT BE SUPPORTED BY THE STEEL FLOOR DECK.

5.3.5 IN ADDITION TO MEETING THE MINIMUM REQUIREMENTS ABOVE, THE DECK MANUFACTURER SHALL DESIGN THE FLOOR DECK AND ATTACHMENTS TO STEEL FOR A MAXIMUM DEFLECTION DUE TO WET CONCRETE & 1 KPa CONSTANT LOAD OF L/240. FLOOR DECK SHALL NOT REQUIRE SHORING DURING CONCRETE PLACEMENT.

5.4 ROOF DECK

5.4.1 STEEL ROOF DECK SHALL BE 38mm RIB HEIGHT, 18 GA HOT-DIP GALVANIZED (SDI TYPE B-18) UON.

5.4.2 ROOF DECK SHALL HAVE THE FOLLOWING MINIMUM PROPERTIES:

	18 GAUGE
MOMENT OF INERTIA, Ip	$399mm^4/mm$ WIDTH
SECTION MODULUS (TOP OF DECK), Sn	$17.58mm^3/mm$ WIDTH
SECTION MODULUS (BOTT OF DECK) Sp	$17.10mm^3/mm$ WIDTH

5.4.3 ROOF DECK SHALL BE FASTENED TO THE SUPPORTS AS INDICATED IN THE BOTTOM OF THE FLUTES USING A SDI 36/7 PATTERN. DECK SIDELAPS SHALL BE ATTACHED USING #10 SELF-TAPPING TEK SCREWS WITH A MINIMUM 3-SIDE LAP CONNECTIONS PER SPAN.

5.4.4 SUSPENDED CEILINGS, LIGHT FIXTURES, DUCTS, CONDUITS, PIPING OR OTHER UTILITIES SHALL NOT BE SUPPORTED BY THE STEEL ROOF DECK.

5.4.5 IN ADDITION TO MEETING THE MINIMUM REQUIREMENTS ABOVE, THE DECK MANUFACTURER SHALL DESIGN THE ROOF DECK AND ATTACHMENTS TO STEEL FOR A MAXIMUM DEFLECTION DUE TO WET CONCRETE & 1 KPa CONSTANT LOAD OF L/240. ROOF DECK SHALL NOT REQUIRE SHORING DURING CONCRETE PLACEMENT.

6.D STRUCTURAL STEEL

6.1 STRUCTURAL STEEL ROLLED SHAPES AND PLATES SHALL CONFORM TO THE MATERIAL INFORMATION SCHEDULE. DIMENSIONS AND PROPERTIES SHALL BE IN ACCORDANCE TO ASTM A36M.

6.2 ANCHOR BOLTS SHALL CONFORM TO ASTM A36M, HEAVY HEX.

6.3 CONNECTION BOLTS FOR STRUCTURAL STEEL MEMBERS SHALL BE 20 DIA ASTM A325M-N, UON; NUTS SHALL CONFORM TO ASTM A563M; WASHERS SHALL CONFORM TO ASTM F436M. CONNECTION BOLTS SHALL HAVE A HARDENED WASHER PLACED UNDER THE ELEMENT TO BE TIGHTENED.

6.4 DETAILING OF STRUCTURAL STEEL CONNECTIONS MUST BE CONSISTENT WITH RECOGNIZED, PUBLISHED METHODS SUCH AS IN THE AISC "STEEL CONSTRUCTION MANUAL", THIRTEENTH EDITION; "ENGINEERING FOR STEEL CONSTRUCTION", OR "VOLUME II CONNECTIONS MANUAL OF STEEL CONSTRUCTION".

6.4.1 THE CODE OF STANDARD PRACTICE OF AISC THIRTEENTH EDITION IS AMENDED SUCH THAT THE FABRICATOR/DETAILER IS RESPONSIBLE FOR THE DESIGN AND DETAILING OF ALL CONNECTIONS.

6.5 STANDARD FRAMING CONNECTIONS SHALL BE DETAILED BY THE FABRICATOR IN ACCORDANCE WITH THE AISC "STEEL CONSTRUCTION MANUAL", THIRTEENTH EDITION. CONNECTIONS SHALL BE DESIGNED TO DEVELOP A MINIMUM END REACTION OF 54kN.

6.5.1 UNLESS NOTED OTHERWISE AS THUS: (##kN), CONNECTIONS SHALL BE DESIGNED AND DETAILED FOR THE END REACTION DETERMINED FROM PART 2 – "ALLOWABLE UNIFORM LOAD TABLES" FROM THE AISC STEEL CONSTRUCTION MANUAL THIRTEENTH EDITION OR A MINIMUM OF 54 kN WHICH EVER IS GREATER.

6.6 ALL MEMBERS AND CONNECTIONS ON THE CONTRACT DRAWINGS AND CONNECTIONS NOT SHOWN SHALL BE DESIGNED AND SEALED BY A LICENSED PROFESSIONAL ENGINEER, DETAILED AND SUBMITTED FOR APPROVAL AND SHOWN ON THE SHOP DRAWINGS.

6.7 ALTERNATIVE CONNECTION DETAILS MAY BE SUBMITTED ON SHOP DRAWINGS BY THE CONTRACTOR ONLY IF ACCOMPANIED BY COMPLETE STRUCTURAL CALCULATIONS PREPARED AND SEALED BY A LICENSED PROFESSIONAL ENGINEER AND SUBMITTED FOR REVIEW.

6.8 CALCULATIONS FOR DETAILS MUST SHOW A RATIONAL ANALYSIS OF A COMPLETE LOAD PATH, INCLUDING LOCAL EFFECTS ON WEBS, FLANGES, ETC OF THE CONNECTED MEMBERS AND THE DEVICES (PLATES, SEATS, BRACKETS, BOLTS, WEBS, ETC) AFFECTING ALL CONNECTIONS. FAILURE TO SUBMIT SUCH CALCULATIONS FOR REVIEW CONCURRENT WITH SHOP DRAWING ERECTION PLANS AND DETAILS WILL BE CAUSE FOR REJECTION OF THAT SUBMITTAL.

6.8.1 ALL SHEAR TAB CONNECTIONS SUBMITTED AS AN ALTERNATE FOR APPROVAL SHALL BE DESIGNED USING A FLEXIBLE SUPPORT CONDITION.

6.8.2 BEAM AND GIRDER CONNECTIONS SHALL BE DESIGNED SUCH THAT ALL ADDITIONAL STRESSES DUE TO CONNECTION ECCENTRICITY SHALL BE DEVELOPED BY THE CONNECTION AND NOT INDUCE ANY ADDITIONAL STRESSES INTO SUPPORTING MEMBERS.

6.9 STRUCTURAL STEEL DETAILING, FABRICATION AND ERECTION SHALL CONFORM TO THE AISC "SPECIFICATION FOR STRUCTURAL STEEL BUILDINGS – ALLOWABLE STRESS DESIGN AND PLASTIC DESIGN" AND THE AISC "CODE OF STANDARD PRACTICE FOR STEEL BUILDINGS AND BRIDGES" – LATEST EDITIONS.

6.10 WELDING SHALL CONFORM TO THE AMERICAN WELDING SOCIETY STRUCTURAL WELDING CODE AWS D1.1. ELECTRODES FOR SHOP AND FIELD WELDS SHALL BE CLASS E70XX. ALL WELDING SHALL BE DONE BY QUALIFIED, CERTIFIED WELDERS PER THE ABOVE STANDARD.

6.11 SHOP AND FIELD TESTING OF WELDS AND BOLTS SHALL BE AS OUTLINED IN THE SPECIFICATIONS.

6.12 ALL FILLET WELDS SHALL BE A MINIMUM OF 5mm UNLESS NOTED OTHERWISE

6.13 THERE SHALL BE NO FIELD CUTTING OF STRUCTURAL STEEL MEMBERS FOR THE WORK OF OTHER TRADES WITHOUT PRIOR APPROVAL OF THE CONTRACTING OFFICER.

6.14 FOR FLOOR AND ROOF OPENINGS, THE FABRICATOR SHALL VERIFY OPENING LOCATIONS WITH EQUIPMENT SELECTED AND MAKE ANY NECESSARY MODIFICATIONS AT NO ADDITIONAL COST. THE CONTRACTOR SHALL COORDINATE MECHANICAL UNITS AND OPENINGS & ARCHITECTURAL ITEMS REQUIRED FOR COMPLETE INSTALLATION OF WORK. IT IS THE RESPONSIBILITY OF FABRICATOR TO RECEIVE ALL NECESSARY INFORMATION PRIOR TO FABRICATION OF THE STEEL.

6.15 ALL STRUCTURAL STEEL SHALL BE PRIMED AS PER THE SPECIFICATIONS.

6.16 ALL PLATES NOT INDICATED SHALL BE 13mm MIN THICKNESS. ALL ANGLES NOT INDICATED SHALL BE 76x76x7.9 MIN. ALL WELDS NOT INDICATED SHALL BE 6mm MIN ALL AROUND UON.

6.17 SEE MECHANICAL, ELECTRICAL, AND PLUMBING SHEETS FOR ADDITIONAL OPENINGS NOT SHOWN. ALL OPENINGS SHALL BE FRAMED 4 SIDES WITH C200x17'S UON.

US ARMY CORPS OF ENGINEERS
AFGHANISTAN
ENGINEER DISTRICT

MARK	DESCRIPTION	DATE	APPR.	MARK	DESCRIPTION	DATE	APPR.

DESIGNED BY: | DWN BY: | CKD BY: | SUBMITTED BY: DEL MUNDO | DATE: | SOLICITATION NO.: | CONTRACT NO.: | FILE NAME: | PLOT SCALE: 1" = 100' | PLOT SCALE: | SIZE: | FILE NAME:

U.S. ARMY CORPS OF ENGINEERS
AFGHANISTAN DISTRICT
APO AE 09358

TRAINING TOWER
STANDARD DESIGN
VARIOUS LOCATIONS

GENERAL NOTES

SHEET REFERENCE
04-S-01

MINIMUM LAP SPLICES OF REINFORCING BARS IN TENSION (PER ACI 318M-05)

f'c = 28 MPa CONCRETE

BAR SIZE \ CENTER TO CENTER BAR SPACING	(---TOP BARS--) LESS THAN 4db	(---TOP BARS--) 4db OR MORE	(--OTHER BARS--) LESS THAN 4db	(--OTHER BARS--) 4db OR MORE	4db
#10	460	460	410	410	40
#12 & #14	660	610	510	480	50
#16	1020	760	790	580	60
#20	1450	910	1120	710	80
#22	1960	1090	1500	840	90
#25	2590	1450	1980	1120	100
#30	3280	1830	2510	1420	110
#32	4140	2340	3200	1780	130
#36	5080	2840	3910	2180	140

NOTES:

1. LAP SPLICES ABOVE ARE IN MILLIMETERS UON.
2. YIELD STRENGTH OF REINFORCEMENT, fy, IS 420 MPa (LAP SPLICE LENGTH IS IN MILLIMETERS)
3. CONCRETE IS NORMAL WEIGHT (2400 Kg/m^3)
4. TOP BAR INDICATES HORIZONTAL REINFORCEMENT WHICH IS PLACED ABOVE 300mm OR MORE OF FRESH CONCRETE.
5. SEE COLUMN SCHEDULE FOR COLUMN AND SHEAR WALL VERTICAL LAP SPLICE.
6. STRAIGHT DEVELOPMENT LENGTH OF AN UNLAPPED BAR IS EQUAL TO VALUE FROM TABLE DIVIDED BY 1.3.
7. CATEGORY FOR BARS SPACED LESS THAN 4d, OR ON CENTER CORRESPONDS TO CATEGORY 1 IN THE CRSI HANDBOOK WHEREAS FOR BARS SPACED 4d, OR MORE ON CENTER CORRESPOND TO CRSI CATEGORY 5.

STEEL MATERIALS SCHEDULE

STRUCTURAL ELEMENT	FY YIELD STRENGTH (MPa)	REMARKS
BEAMS & GIRDERS	250	ASTM A36M ASTM A6M
COLUMNS	240	ASTM A53-95 GRADE B ASTM A6M
MISC BRACING	250	ASTM A572M ASTM A6M
CONNECTIONS, PLATES, & ALL OTHERS	250	ASTM A36M ASTM A6M
ANCHOR BOLTS	-	ASTM A36M or A307M ASTM A6M
PIPES	240	ASTM A53-95 GRADE B ASTM A6M
TUBING	345	ASTM A500-93 GRADE C ASTM A6M
HIGH STRENGTH BOLTS	-	ASTM A325M-N
WELDING ELECTRODES	-	AWS D1.1-90 E70xx

CONCRETE COVER SCHEDULE

MINIMUM CONCRETE COVER PROTECTION FOR REINFORCEMENT BARS SHALL BE AS FOLLOWS: (SEE ACI 318M-05, SECTION 7.7 FOR CONDITIONS NOT NOTED). DIMENSIONS FOR BAR PLACEMENT GIVEN IN SECTIONS AND DETAILS SHALL SUPERSEDE MINIMUM COVER REQUIREMENTS GIVEN HERE. DIMENSIONS ARE IN mm.

FOOTINGS (EARTH FORMED)		70
COLUMNS / PIERS (TO TIES)		40
GRADE BEAMS OR SLAB TURNED DOWN EDGES:		
TOP		40
BOTTOM (EARTH FORMED)		70
SIDES (EARTH FORMED)		70
SIDES (BOARD FORMED)	#16 BAR & SMALLER	40
	#20 THRU #36 BAR	50
ELEVATED BEAMS & SLABS:		
BEAM TIES & STIRRUPS (NOT EXPOSED TO WEATHER)		40
BEAM TIES & STIRRUPS (EXPOSED TO WEATHER)		50
FLOOR SLABS (NOT EXPOSED TO WEATHER)		20
FLOOR SLABS (EXPOSED TO WEATHER)		
#20 & LARGER		50
#12 & SMALLER		40
ROOF SLAB BARS		25
SLABS-ON-GRADE (NO EXPOSURE TO WEATHER) FROM TOP		20
SLABS-ON-GRADE (EXPOSURE TO WEATHER) FROM TOP		40
UTILITY TUNNEL WALLS, RETAINING WALLS AND SHEAR WALLS, (NO SURFACES SHALL BE EARTH FORMED) EARTH SIDE AND FRONT SIDE (EXPOSED TO WEATHER):		
#16 BAR AND SMALLER		40
#20 THRU #36 BAR		50

PROVIDE STANDARD BAR CHAIRS AND SPACERS AS REQUIRED TO MAINTAIN CONCRETE PROTECTION SPECIFIED.

CONCRETE MATERIALS SCHEDULE

STRUCTURAL ELEMENT	f'c CONCRETE COMPRESSIVE STRENGTH @ 28 DAYS (MPa)
SLAB-ON-GRADE/TURN-DOWN SLABS	28
FLOOR SLABS	28
ALL FOOTINGS (UON)	28
MISC. CURBS, WALLS AND PADS UON	28
CAST-IN-PLACE LINTEL	28
CONCRETE FRAMING - BEAMS AND COLUMNS	28

NOTES:

1. ALL CONCRETE SHALL BE NORMAL WEIGHT CONCRETE. (2400 Kg/m^3 UON)
2. ALL CONCRETE SHALL HAVE A MAX WATER-CEMENT RATIO OF 0.45.

STANDARD HOOKS IN TENSION PER (ACI 318M-05)

BAR SIZE	HOOK DEVELOPMENT LENGTH Ldh (mm) f'c 28 MPa
#10	180
#12	220
#14	260
#16	300
#20	380
#22	430
#25	480
#30	580
#32	610
#36	690

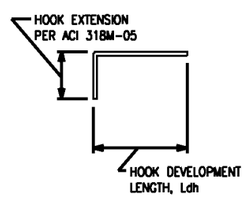

NOTES:

1. CONCRETE IS NORMAL WEIGHT CONCRETE.
2. BAR YIELD STRENGTH, fy = 420 MPa
3. SIDE COVER REQUIREMENTS OF ACI SECT. 12.5.3.2 ARE ASSUMED TO NOT BE MET.
4. TIE OR STIRRUP REQUIREMENTS OF ACI SECT. 12.5.3.2 ARE ASSUMED TO NOT BE MET.
5. REDUCTION FOR EXCESS REINFORCEMENT IS NOT TAKEN.
6. HOOK DEVELOPMENT LENGTH IS VALID FOR 180° HOOKS ALSO.

SPREAD FOOTING SCHEDULE

MARK	FOOTING SIZE LENGTH (mm)	FOOTING SIZE WIDTH (mm)	FOOTING SIZE THICKNESS (mm)	FOOTING REINFORCING	REMARKS
F1	1200	1200	400	#20 @ 200 E.W. BOTT	-----
F2	1800	1800	400	#20 @ 200 E.W. BOTT	-----
F3	1800	10000	400	#20 @ 200 E.W. BOTT	-----

NOTES:

1. ALL DIMENSIONS ARE IN mm UNLESS OTHERWISE SPECIFIED.
2. FINISHED FLOOR ELEV / TOP OF SLAB ELEV GIVEN IN REFERENCE TO 0.0 mm DATUM. DISTANCE ABOVE OR BELOW INDICATED AS NEGATIVE OR POSITIVE.
3. BOTTOM OF FOOTING ELEVATION TO BE -1000 mm FOR ALL OF THE FOOTINGS.

US ARMY CORPS OF ENGINEERS
AFGHANISTAN
ENGINEER DISTRICT

MARK	DESCRIPTION	DATE	APPR.	MARK	DESCRIPTION	DATE	APPR.

DESIGNED BY: | DWN BY: DEL MUNDO | CKD BY: | SUBMITTED BY: | DATE: | SOLICITATION NO.: | CONTRACT NO.: | PLOT SCALE: 1" = 100' SIZE: | PLOT DATE: | FILE NAME:

U.S. ARMY CORPS OF ENGINEERS
AFGHANISTAN DISTRICT
APO AE 09358

TRAINING TOWER
STANDARD DESIGN
VARIOUS LOCATIONS

GENERAL NOTES

SHEET REFERENCE
04-S-02

CMU LINTEL SCHEDULE

OPENING TYPE OR SIZE, BEAM LOCATION OR TYPE	MAX SPAN (mm)	LINTEL DEPTH (mm)	REINFORCING BOTTOM
EXT WALL OPENING, 1-STORY BLDG	1800	400	(2)-#14
EXT WALL OPENING, 1-STORY BLDG	900	200	(2)-#14
INT WALL OPENING, NON-BEARING	2400	400	(2)-#14
INT WALL OPENING, NON-BEARING	1800	200	(2)-#14
INT WALL OPENING, NON-BEARING	900	200	(2)-#14
INT SERVERY OPENING	4880	600	(3)-#20
INT WALL OPENING, SHEAR WALL	900	200	(2)-#14
INT WALL OPENING, SHEAR WALL	1800	200	(2)-#14
INT WALL OPENING, SHEAR WALL	2400	400	(2)-#16
EXT KITCHEN ANNEX	1800	1000	(2)-#16

1. STRUCTURAL SHEETS DO NOT INDICATE ALL OPENINGS IN MASONRY WALLS. VERIFY NUMBER, SIZE AND LOCATION OF ALL OPENINGS IN MASONRY WALLS FROM ARCHITECTURAL SHEETS AND APPROVED PLUMBING, MECHANICAL, AND ELECTRICAL SHOP DRAWINGS.
2. PROVIDE 200mm BEARING EA END FOR 200mm DEEP CMU LINTEL PROVIDE 400mm BEARING EA END FOR 400mm DEEP CMU LINTEL.
3. FOR HEAD DETAILS REFER TO ARCHITECTURAL SHEETS.
4. REINFORCING SHALL BE ASTM A615M, GRADE 420. CONCRETE FOR CAST-IN-PLACE BEAMS SHALL HAVE A MINIMUM COMPRESSIVE STRENGTH OF 28 MPa AT 28 DAYS.
5. CONTRACTOR SHALL SUBMIT FOR APPROVAL SHOP DRAWINGS AND SCHEDULES SHOWING SIZE, DETAILS, LOCATIONS, ETC FOR ALL CAST-IN-PLACE BEAMS IN CMU WALLS.

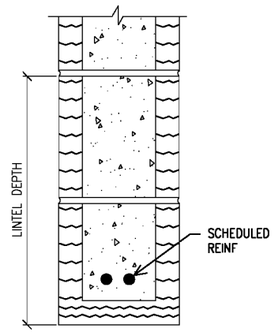

TYPICAL CMU LINTEL DETAIL

SCALE: NTS

NOTE:
1. SEE SCHEDULE THIS SHEET FOR REINFORCING & LINTEL DEPTH

MAXIMUM CMU WALL UNSUPPORTED HEIGHT OR LENGTH

	WALL THICKNESS (mm)	EXTERIOR WALL NON-LOAD BEARING (mm)	INTERIOR NON-LOAD BEARING WALL (mm)
MAX HEIGHT OR LENGTH BETWEEN SUPPORTS	200	4800	7200

NOTE: CMU WALL MAXIMUM LATERAL SUPPORT SPACING GIVEN IN SECTIONS AND DETAILS SHALL SUPERSEDE THE ABOVE SCHEDULE REQUIREMENTS.

MASONRY REINFORCING MINIMUM LAP SPLICES

BAR SIZE	BASIC LAP SPLICE Ld FOR CMU REINFORCING (mm)
#10	450
#12	550
#14	650
#16	750
#20	950
#22	1050

TYPICAL CMU WALL REINFORCING SCHEDULE

WALL TYPE OR LOCATION	WALL THICKNESS (mm)	CONT VERT REINF (CENTERED IN CMU, UON)	INTERMEDIATE CMU LINTEL (CIP BB)			REMARKS
			DEPTH (mm)	REINF (BOTT UON)	MAX BOND BEAM VERT SPACING (mm)	
ALL PERIMETER/EXTERIOR WALLS (UON)	200	1-#16 @ 600	200	2-#16	1200	-----
LOAD BEARING INTERIOR WALLS WITH TOP AND BOTT SUPPORTS	200	1-#14 @ 800	200	2-#16	1200	-----
NON-LOAD BEARING INTERIOR WALLS WITH TOP AND BOTT SUPPORTS	300	1-#16 @ 800	200	2-#16	1200	-----
KITCHEN ANNEX	200	1-#16 @ 800	200	2-#16	800	-----

NOTES:
1. REINFORCING SIZES AND SPACING GIVEN IN SECTIONS AND DETAILS SHALL SUPERSEDE THE ABOVE SCHEDULE REQUIREMENTS.
2. PROVIDE CONTINUOUS CAST IN PLACE CONCRETE BOND BEAM AT ALL WALL LATERAL SUPPORT LOCATIONS.
3. REINFORCING INDICATED SHALL BE CONTINUOUS FOR FULL EXTENT OF SPLICE FOLLOWING THE REQUIREMENTS OF THE LAP SPLICE TABLE SHOWN ON THIS SHEET.
4. WALLS HAVE BEEN DESIGNATED AS VERTICALLY SPANNING UON AND THEREFORE MUST BE TEMPORARILY SUPPORTED DURING CONSTRUCTION UNTIL THE SUPPORTING DIAPHRAGMS (FLOOR AND ROOF SYSTEMS) HAVE BEEN COMPLETELY INSTALLED. SHORING IS THE RESPONSIBILITY OF THE CONTRACTOR.
5. ALL CMU WALLS SHALL BE FULLY GROUTED IN LIFTS NOT EXCEEDING THOSE BY CODE (UON)
6. SEE TYPICAL CMU WALL DETAILS ON SHEET S-12.

COLUMN SCHEDULE

DESCRIPTION \ COLUMN MARK	C1	C2	C3	C4
TYPE	16-BAR	16-BAR	16-BAR	16-BAR
DIMENSIONS	400mm SQ	400mm SQ	400mm SQ	300mm SQ
VERTICAL REINFORCEMENT	(16)-#20	(16)-#25	(8)-#25	(8)-#20
TIES	#10	#10	#10	#10

NOTES:
1. WORK THIS SCHEDULE WITH COLUMN DETAILS ON SHEETS S-7 THRU S-9.
2. SEE FOOTING SCHEDULE THIS SHEET FOR FOOTING INFORMATION.
3. COLUMN TIES: INTERIOR TIES TO MATCH SIZE & SPACING OF PERIMETER TIES.
4. HOOKS SHOWN ON SECTIONS & DETAILS SHALL BE 90° STD UON.

BEAM SCHEDULE

MARK	BEAM SIZE (mm)		BEAM REINFORCING		STIRRUPS	REMARKS
	DEPTH	WIDTH	TOP	BOTT	SIZE	
GB1	400	400	(3)-#20	(3)-#20	#10	-----
B1	400	400	(5)-#20	(5)-#20	#10	-----
B2	400	400	(3)-#20	(3)-#20	#10	-----
B3	400	400	(6)-#20	(6)-#20	#10	-----
B4	400	400	(4)-#20	(4)-#20	#10	-----
B5	400	300	(3)-#20	(3)-#20	#10	-----

NOTES:
1. WORK THIS SCHEDULE WITH BEAM REINFORCING DETAILS ON SHEETS S-7 THRU S-9.
2. HOOKS SHOWN ON SECTIONS AND DETAILS SHALL BE 90° STD UON.
3. USE ONLY (1) TC AT BEAM COLUMN INTERSECTION WHERE REQ'D.

US ARMY CORPS OF ENGINEERS
AFGHANISTAN ENGINEER DISTRICT

MARK	DESCRIPTION	DATE	APPR.	MARK	DESCRIPTION	DATE	APPR.

U.S. ARMY CORPS OF ENGINEERS
AFGHANISTAN DISTRICT
APO AE 09356

DESIGNED BY:
DWN BY: DEL MUNDO
CKD BY:
SUBMITTED BY:
DATE:
SOLICITATION NO.:
CONTRACT NO.:
PLOT SCALE: 1" = 100'
PLOT SCALE:
SIZE:
FILE NAME:
FILE NAME:

TRAINING TOWER
STANDARD DESIGN
VARIOUS LOCATIONS

GENERAL NOTES

SHEET REFERENCE
04-S-03

STRUCTURAL DESIGN CRITERIA

ALL DESIGNS SHALL CONFORM TO THE PROVISIONS OF THE IBC 2006 AS APPLICABLE

1.0 DESIGN LOADS

1.1 DEAD LOADS

1.1.1 ROOF DEAD LOADS – PRE-ENGINEERED FRAMING

	MAXIMUM GRAVITY LOAD	MINIMUM GRAVITY LOAD
STEEL FRAMING	0.20 KPa	0.15 KPa
METAL DECKING/ROOFING	0.14 KPa	0.05 KPa
MECH/ELEC/PLUMBING	0.15 KPa	0.10 KPa
METAL PANEL CEILING	0.15 KPa	0.15 KPa
MISC	0.40 KPa	0.00 KPa
	1.00 KPa	0.45 KPa

1.2 LIVE LOADS (PER IBC 2006)

1.2.1 ROOF LIVE LOADS: ALL BUILDINGS

GREATER OF 1.5 KPa MINIMUM OR SNOW LOAD

1.2.2 SLAB-ON-GRADE LIVE LOADS

ALL BUILDINGS 4.80 KPa

1.3 SNOW LOADS (PER IBC 2006)

1.3.1 DESIGN PARAMETERS

GROUND SNOW LOAD (per UFC 3-310-01)	1.0 KPa
SNOW IMPORTANCE FACTOR	1.0
SNOW EXPOSURE FACTOR	1.0

1.4 SEISMIC LOADS (PER IBC 2006 & UFC 3-310-04)

SEISMIC OCCUPANCY CATEGORY	II
SEISMIC IMPORTANCE FACTOR (I)	1.0
SEISMIC SITE CLASS	D
Ss	2.40
S1	1.20
SEISMIC DESIGN CATEGORY	D
SEISMIC RESISTING SYSTEM	MOMENT RESISTING FRAME SPECIAL REINFORCE CONCRETE MOMENT FRAMES
RESPONSE MODIFICATION FACTOR (R)	8

1.5 WIND LOADS (PER IBC 2006)

1.5.1 DESIGN PARAMETERS

BASIC WIND SPEED	137 Km/h
WIND IMPORTANCE FACTOR	1.0
WIND EXPOSURE CATEGORY	D
DIRECTIONALITY COEFFICIENT (Kd)	0.85
TOPOGRAPHIC FACTOR (Kzt)	1.0

2.0 FOUNDATION DESIGN CRITERIA (TO BE CONFIRMED BY THE CONTRACTOR)

THE GEOTECHNICAL ANALYSIS FOR THIS PROJECT IS THE RESPONSIBILITY OF THE CONTRACTOR AWARDED THE WORK. DESIGN VALUES USED IN THE STRUCTURAL ANALYSIS OF THE BUILDINGS HEREIN INDICATED HAVE BEEN ASSUMED AND SHALL BE CONFIRMED AND VERIFIED AS PART OF THE GEOTECHNICAL INVESTIGATION. VALUES WHICH DO NOT MEET THE REQUIREMENTS INDICATED BELOW SHALL BE IMMEDIATELY BROUGHT TO THE ATTENTION OF THE CONTRACTING OFFICER FOR CONSIDERATION AND DETERMINATION ON THE NEXT APPROPRIATE COURSE OF ACTION.

2.1.1 SOIL DESIGN PARAMETERS

NET ALLOWABLE SOIL BEARING CAPACITY	72.0 KPa
UNIT WEIGHT OF SOIL (moist)	1800 Kg/m^3
COEFF ACTIVE EARTH PRESSURE (Kpa)	0.30
COEFF PASSIVE EARTH PRESSURE (Kpp)	3.33
COEFF AT-REST EARTH PRESSURE (Kpr)	.55
COEFF OF SOIL FRICTION	.35
SUBGRADE MODULUS	4120 g/cm^3
MINIMUM BEARING DEPTH BELOW GRADE	800mm
SEISMIC SITE CLASS (based on in-situ soil)	D

US ARMY CORPS OF ENGINEERS AFGHANISTAN ENGINEER DISTRICT

MARK	DESCRIPTION	DATE	APPR.	MARK	DESCRIPTION	DATE	APPR.

DESIGNED BY: DWN BY: DEL MUNDO CKD BY: SUBMITTED BY: DATE: SOLICITATION NO.: CONTRACT NO.: FILE NAME: PLOT SCALE: 1" = 10' PLOT DATE: SIZE: FILE NAME:

U.S. ARMY CORPS OF ENGINEERS
AFGHANISTAN DISTRICT
APO AE 09356

TRAINING TOWER
STANDARD DESIGN
VARIOUS LOCATIONS

GENERAL NOTES

SHEET REFERENCE
04-S-04

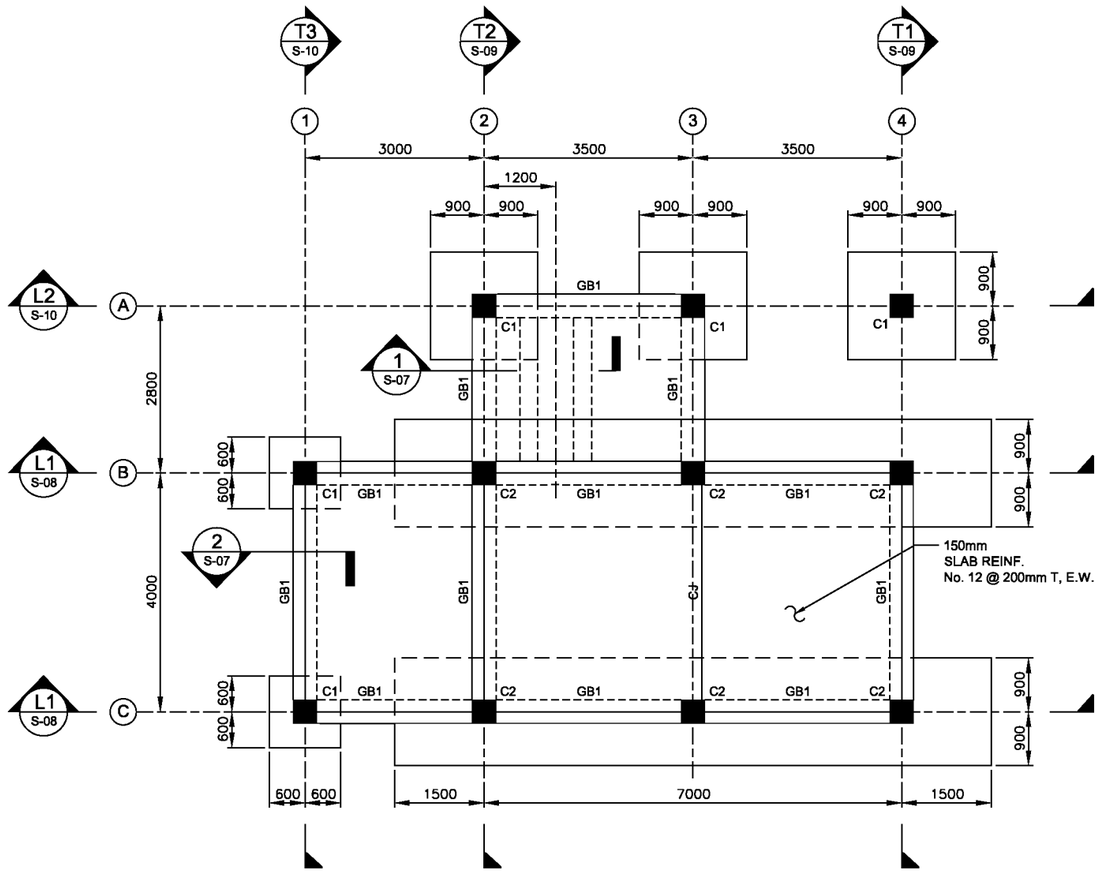

FOUNDATION / SLAB PLAN

SCALE: 1:50

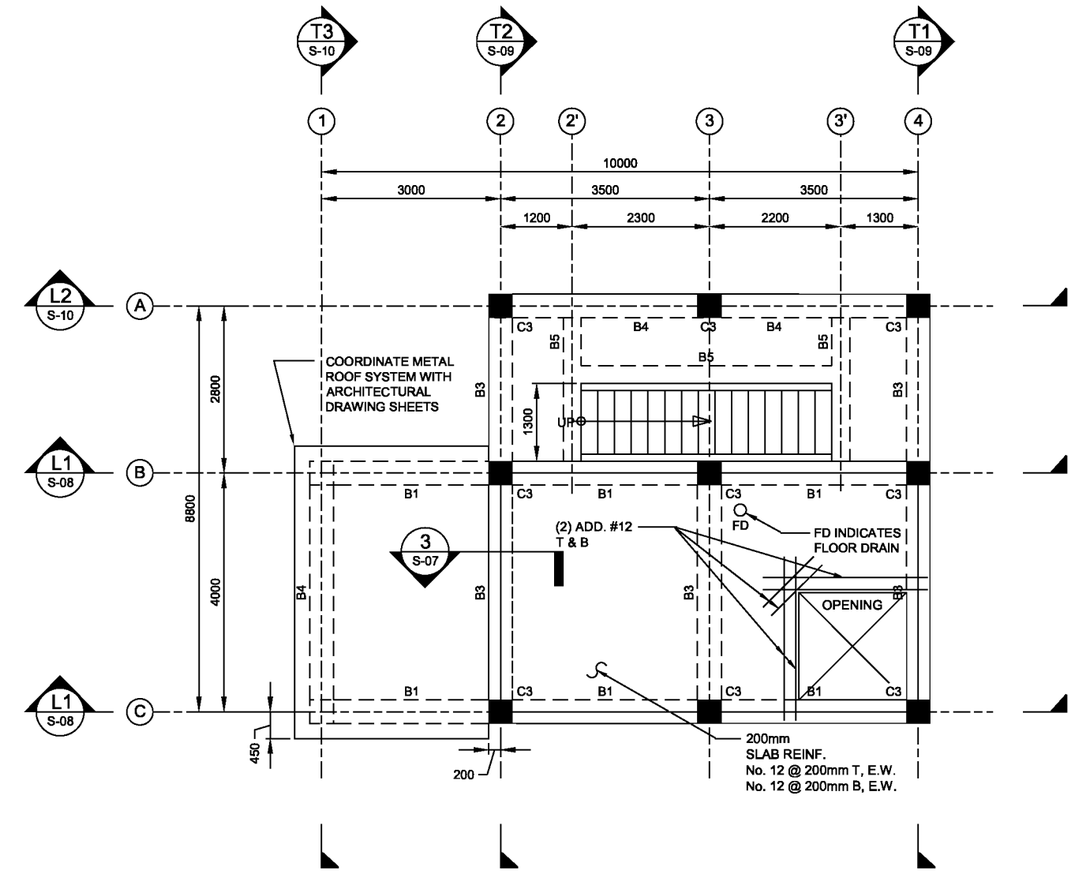

SECOND FLOOR FRAMING PLAN

SCALE: 1:50

GENERAL NOTES

1. A RELATIVE (DATUM) FINISH FLOOR ELEVATION EQUAL TO 0.00 m. IS USED AS REFERENCE ELEVATION FOR ALL STRUCTURAL DRAWINGS. COORDINATE WITH SITE SPECIFIC GRADING PLAN TO BE PROVIDED BY CONTRACTOR.
2. FOUNDATIONS ARE DESIGNED USING AN ALLOWABLE BEARING PRESSURE OF 0.75 KG/SQ. CM (1500 PSF), AND A SUBGRADE MODULUS OF 54,292 KN/CU. M (200 PCI) AND BOTTOM OF FOOTINGS ARE PLACED AS SHOWN ON DRAWINGS. GEOTECHNICAL INVESTIGATION SHALL CONFIRM BEARING CAPACITY TO BE NO LESS THAN 0.75 KG/SQ CM. IF GEOTECHNICAL INVESTIGATION SHOWS LESS THAN 0.75 KG/SQ CM THE CONTRACTOR SHALL REDESIGN FOOTINGS BASED ON THE GEOTECHNICAL INVESTIGATION. SEE SPECIFICATION 01015 PARAGRAPH, GEOTECHNICAL, FOUNDATION AND SURVEY.
3. CJ INDICATES CONTROL JOINT.
4. COORDINATE THE LOCATION OF FLOOR DRAINS, SLAB PENETRATIONS AND SLAN DEPRESSIONS WITH ARCHITECHTUAL DRAWIGNS AND M.E.P. REQUIREMENTS.
5. COORDINATE ALL STAIR, HANDRAIL AND RAPPEL SUPPORT REQUIREMENTS WITH ARCHITECHTURAL DRAWINGS.

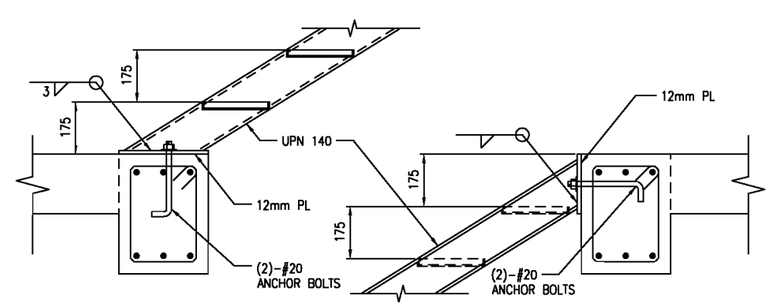

STAIR DETAIL

SCALE = 1:10

US ARMY CORPS OF ENGINEERS
AFGHANISTAN ENGINEER DISTRICT

MARK	DESCRIPTION	DATE	APPR.	MARK	DESCRIPTION	DATE	APPR.

U.S. ARMY CORPS OF ENGINEERS
AFGHANISTAN DISTRICT
APO AE 09356

DESIGNED BY:
DWN BY: DEL MUNDO
CKD BY:
SUBMITTED BY:
DATE:
SOLICITATION NO.:
CONTRACT NO.:
FILE NAME:
PLOT SCALE: 1" = 100'
PLOT SCALE:
SIZE:
FILE NAME:

TRAINING TOWER
STANDARD DESIGN
VARIOUS LOCATIONS

FOUNDATION/SLAB PLAN
&
SECOND FLOOR FRAMING PLAN

SHEET REFERENCE
04-S-05

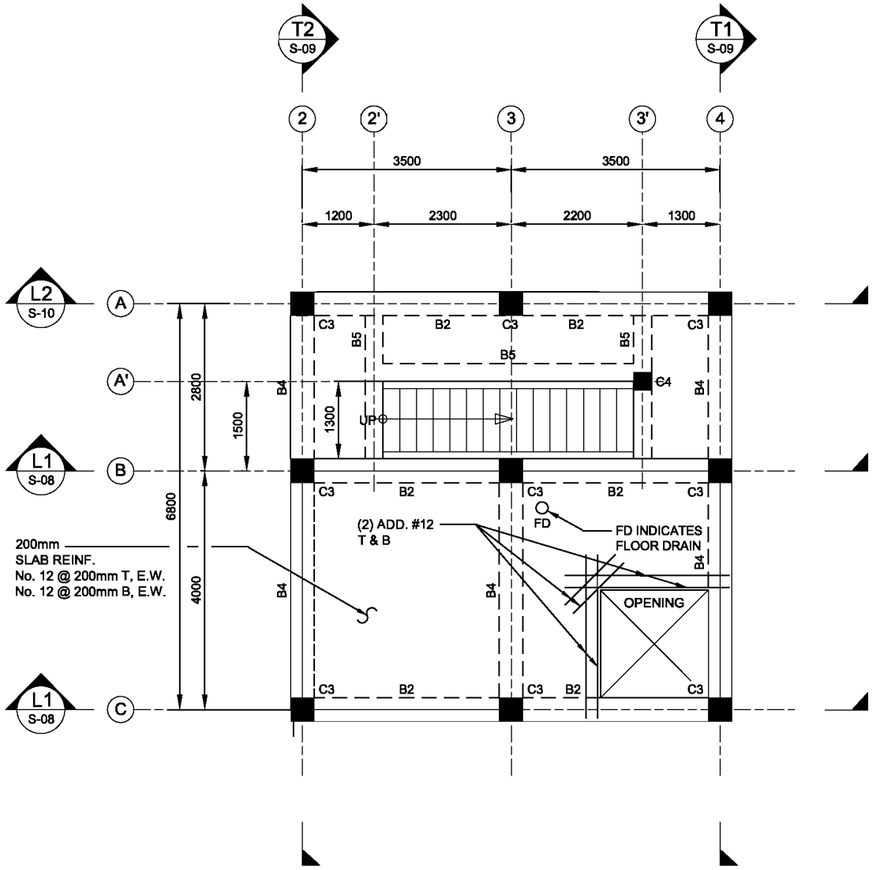

THIRD FLOOR FRAMING PLAN

SCALE: 1:50

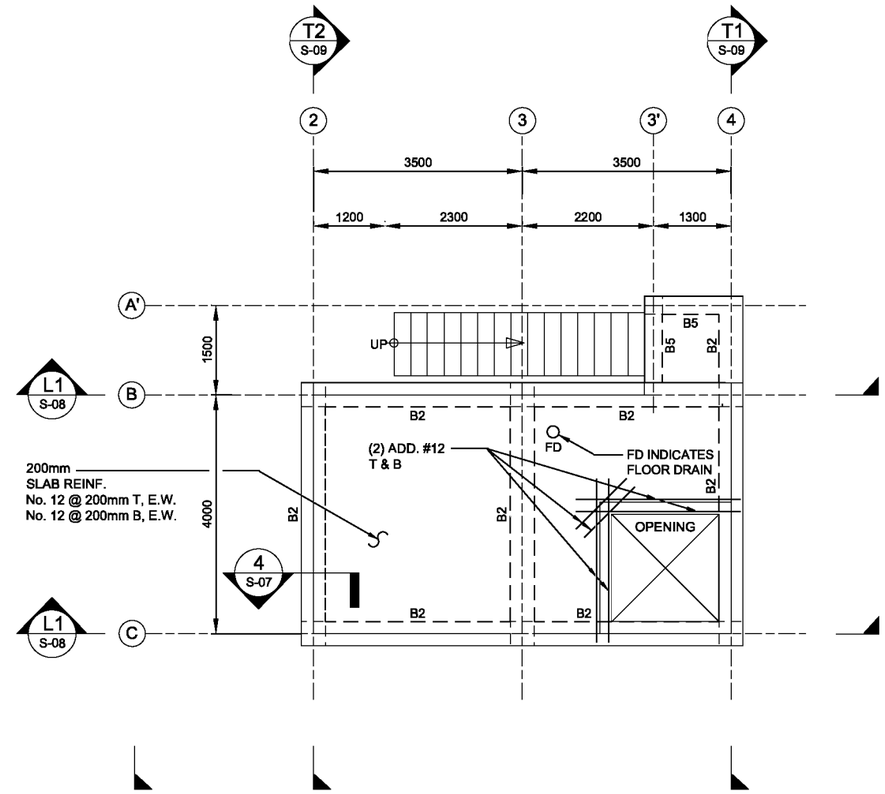

ROOF FLOOR FRAMING PLAN

SCALE: 1:50

GENERAL NOTES

1. COORDINATE THE LOCATION OF FLOOR DRAINS, SLAB PENETRATIONS AND SLAN DEPRESSIONS WITH ARCHITECHTUAL DRAWIGNS AND M.E.P. REQUIREMENTS.
2. COORDINATE ALL STAIR, HANDRAIL AND RAPPEL SUPPORT REQUIREMENTS WITH ARCHITECHTURAL DRAWINGS.

US ARMY CORPS OF ENGINEERS
AFGHANISTAN ENGINEER DISTRICT

MARK	DESCRIPTION	DATE	APPR.	MARK	DESCRIPTION	DATE	APPR.

DESIGNED BY:
DWN BY: DEL MUNDO
CKD BY:
SUBMITTED BY:
DATE:
SOLICITATION NO.:
CONTRACT NO.:
PLOT SCALE: 1" = 100'
PLOT SCALE:
SIZE:
FILE NAME:
FILE NAME:

U.S. ARMY CORPS OF ENGINEERS
AFGHANISTAN DISTRICT
APO AE 09356

TRAINING TOWER
STANDARD DESIGN
VARIOUS LOCATIONS

THIRD FLOOR FRAMING PLAN
&
ROOF FLOOR FRAMING PLAN

SHEET REFERENCE
04-S-06

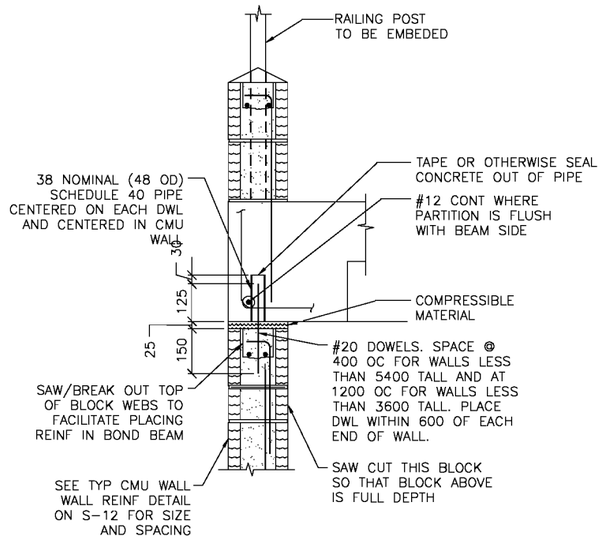

NOTES:
1. EXTEND DOWEL REINF TO 25 CLEAR FROM TOP OF CMU WALL.

4 / S-07 **SECTION**
SCALE: 1:10

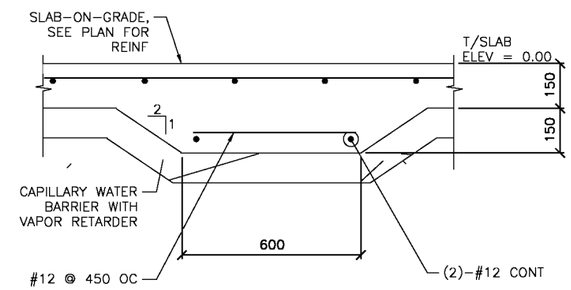

1 / S-07 **SECTION**
SCALE: 1:10

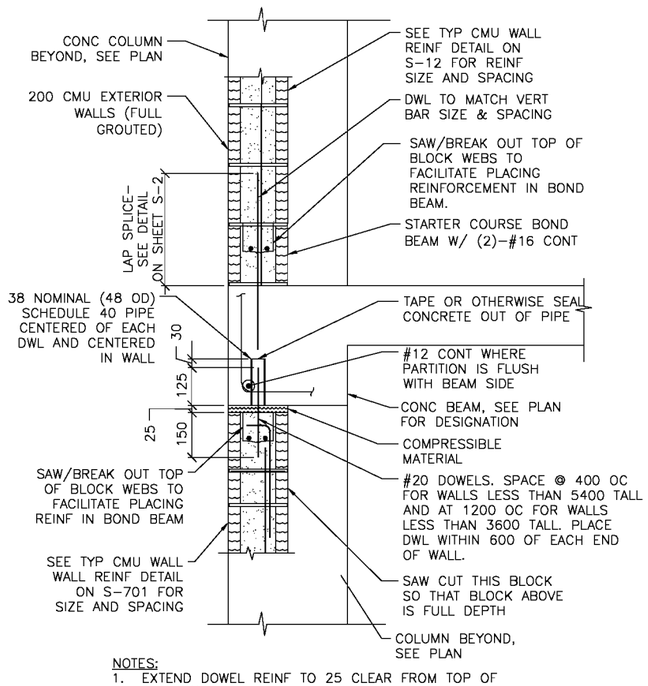

NOTES:
1. EXTEND DOWEL REINF TO 25 CLEAR FROM TOP OF CMU WALL.
2. BEAM/SLAB REINF NOT SHOWN FOR CLARITY.

3 / S-07 **SECTION**
SCALE: 1:10

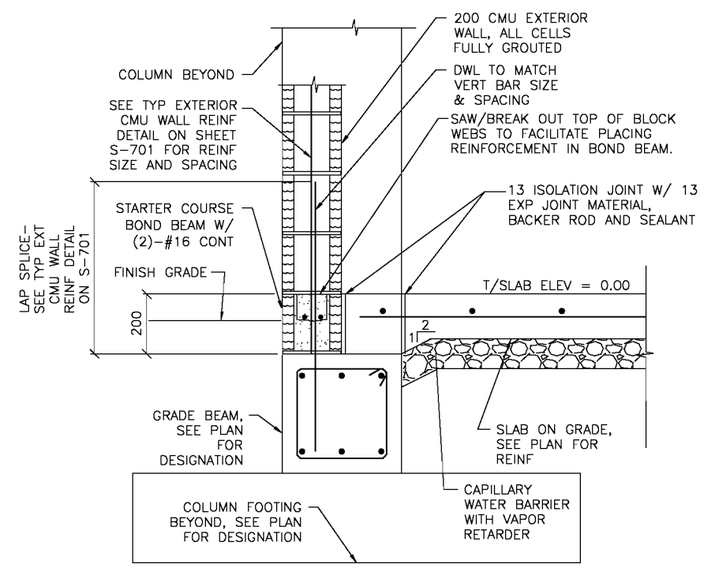

2 / S-07 **SECTION**
SCALE: 1:10

US ARMY CORPS
OF ENGINEERS
AFGHANISTAN
ENGINEER DISTRICT

MARK	DESCRIPTION	DATE	APPR.	MARK	DESCRIPTION	DATE	APPR.

U.S. ARMY CORPS OF ENGINEERS
AFGHANISTAN DISTRICT
APO AE 09356

DESIGNED BY:
DWN BY: DEL MUNDO
CKD BY:
SUBMITTED BY:
DATE:
SOLICITATION NO.:
CONTRACT NO.:
PLOT SCALE: 1"=10'
PLOT SCALE:
SIZE:
FILE NAME:
FILE NAME:

TRAINING TOWER
STANDARD DESIGN
VARIOUS LOCATIONS

SLAB & WALL SECTIONS

SHEET
REFERENCE
04-S-07

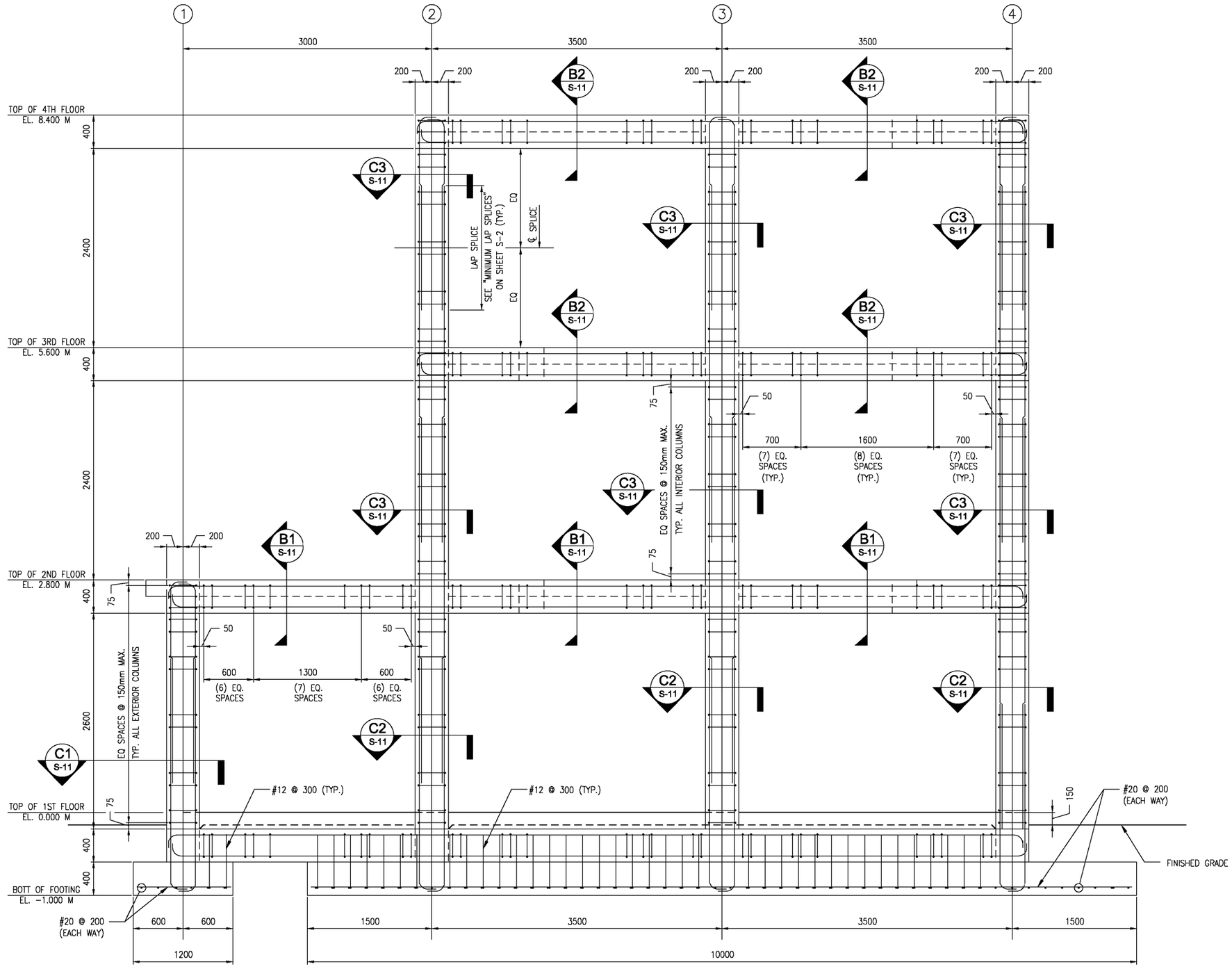

SECTION L1–L1
SCALE = 1:25

US ARMY CORPS OF ENGINEERS
AFGHANISTAN ENGINEER DISTRICT

MARK	DESCRIPTION	DATE	APPR.	MARK	DESCRIPTION	DATE	APPR.

DESIGNED BY: DWN BY: DEL MUNDO CKD BY: SUBMITTED BY:
DATE: SOLICITATION NO.: CONTRACT NO.: FILE NAME:
PLOT SCALE: 1" = 100' PLOT SCALE: SIZE: FILE NAME:

U.S. ARMY CORPS OF ENGINEERS
AFGHANISTAN DISTRICT
APO AE 09356

TRAINING TOWER
STANDARD DESIGN
VARIOUS LOCATIONS

BEAM & COLUMN DETAILS

SHEET REFERENCE
04-S-08

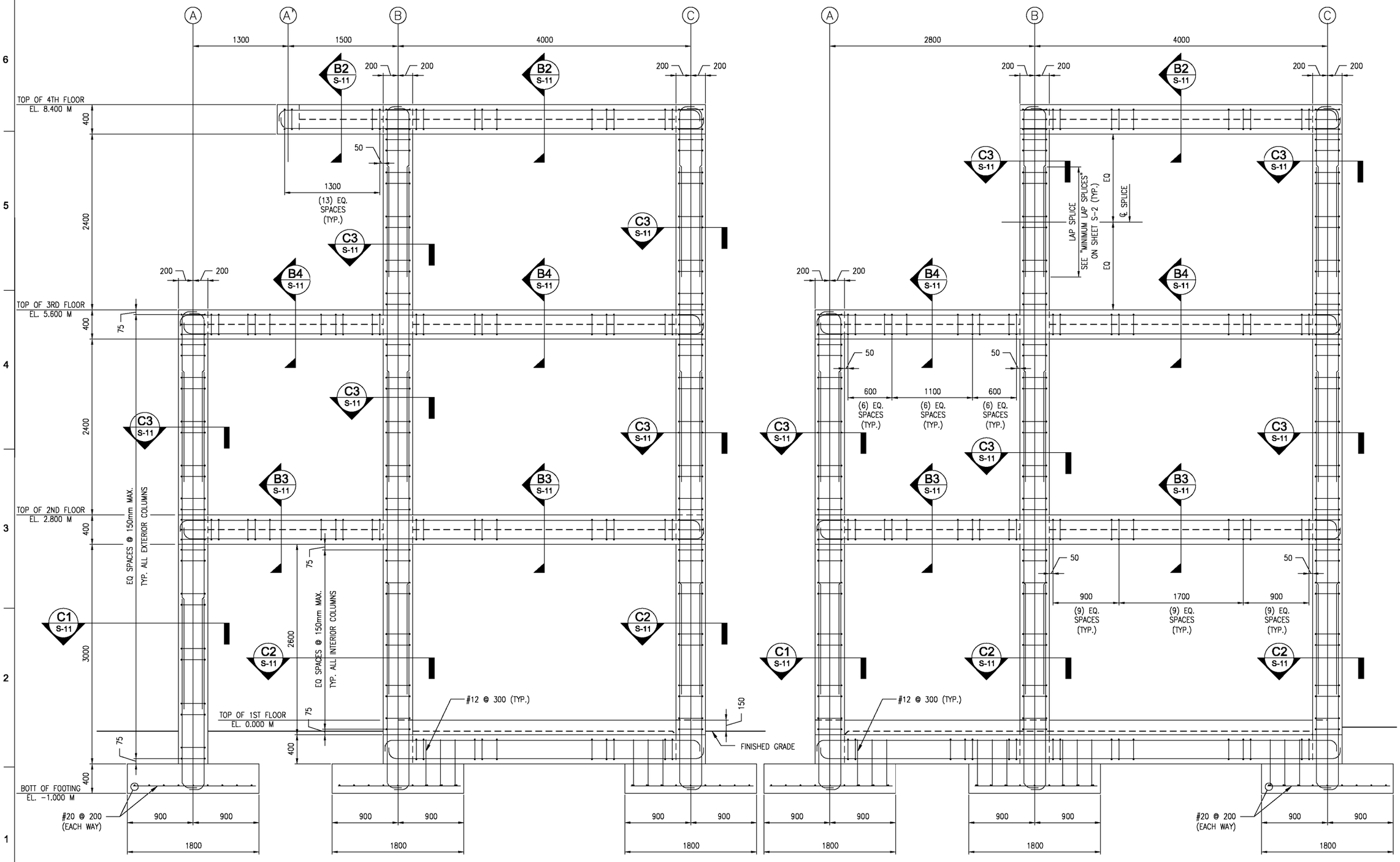

SECTION T1–T1
SCALE = 1:25

SECTION T2–T2
SCALE = 1:25

US ARMY CORPS OF ENGINEERS
AFGHANISTAN ENGINEER DISTRICT

MARK	DESCRIPTION	DATE	APPR.	MARK	DESCRIPTION	DATE	APPR.

DESIGNED BY: DWN BY: DEL MUNDO CKD BY: SUBMITTED BY: DATE: SOLICITATION NO.: CONTRACT NO.: PLOT SCALE: 1" = 10' PLOT SCALE: SIZE: FILE NAME: FILE NAME:

U.S. ARMY CORPS OF ENGINEERS
AFGHANISTAN DISTRICT
APO AE 09356

TRAINING TOWER
STANDARD DESIGN
VARIOUS LOCATIONS

BEAM & COLUMN DETAILS

SHEET REFERENCE
04-S-09

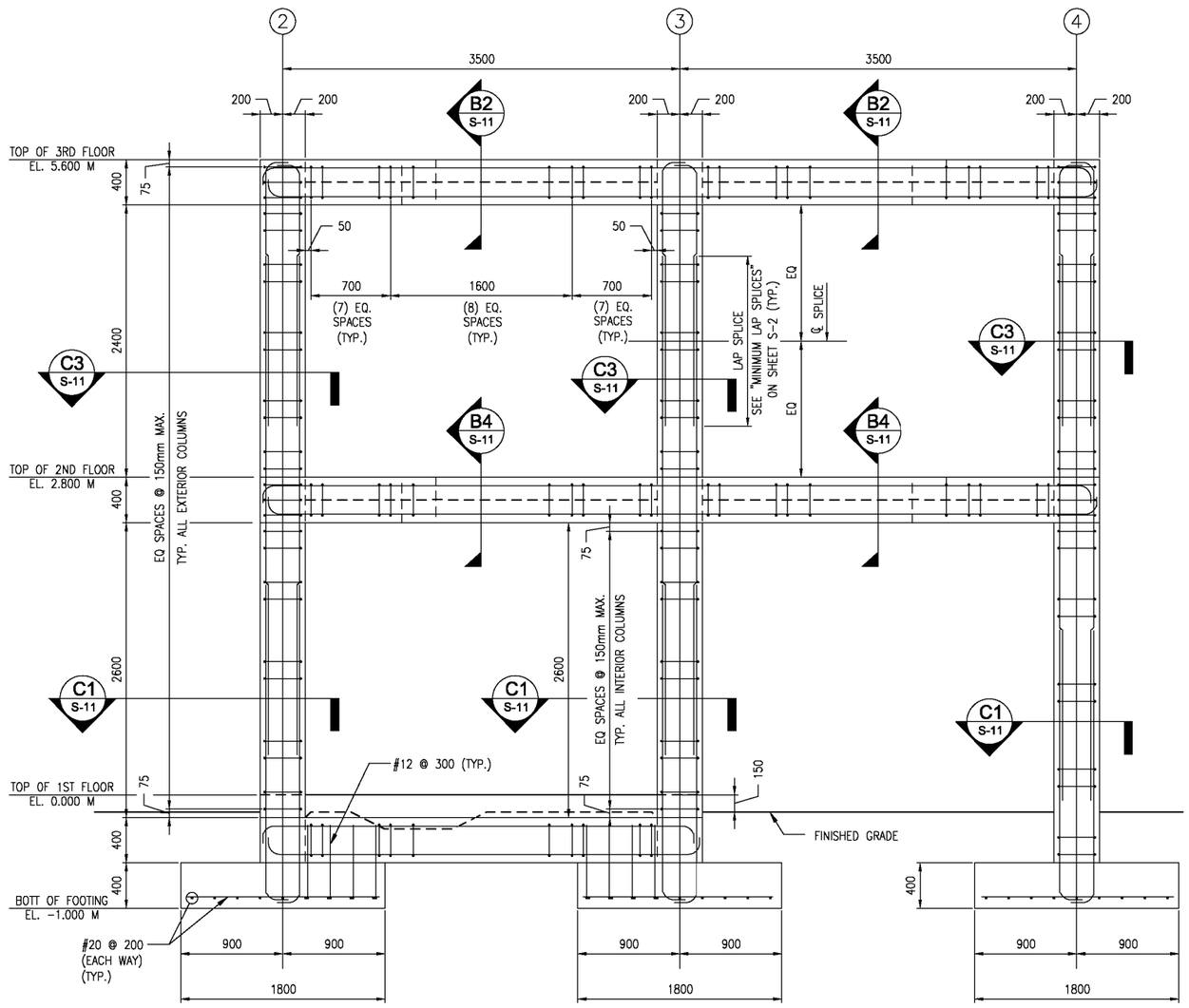

SECTION L2–L2
SCALE = 1:25

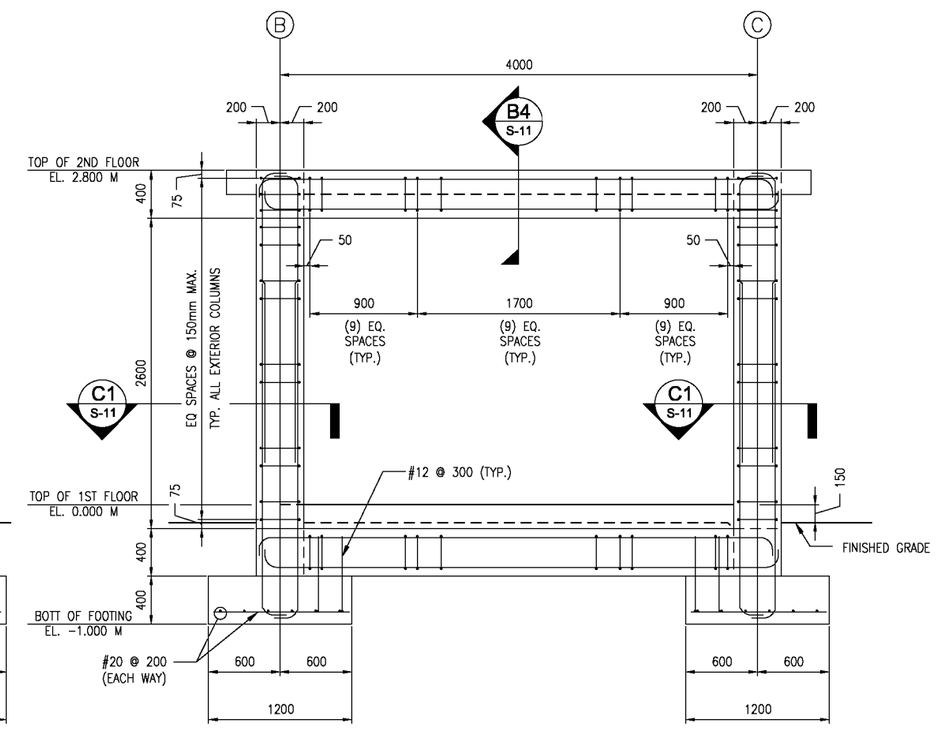

SECTION T3–T3
SCALE = 1:25

US ARMY CORPS OF ENGINEERS
AFGHANISTAN ENGINEER DISTRICT

MARK	DESCRIPTION	DATE	APPR.	MARK	DESCRIPTION	DATE	APPR.

DESIGNED BY: DWN BY: DEL MUNDO CKD BY: SUBMITTED BY: DATE: SOLICITATION NO.: CONTRACT NO.: PLOT SCALE: 1" = 10' PLOT DATE: SIZE: FILE NAME: FILE NAME:

U.S. ARMY CORPS OF ENGINEERS
AFGHANISTAN DISTRICT
APO AE 09356

TRAINING TOWER
STANDARD DESIGN
VARIOUS LOCATIONS

BEAM & COLUMN DETAILS

SHEET REFERENCE
04-S-10

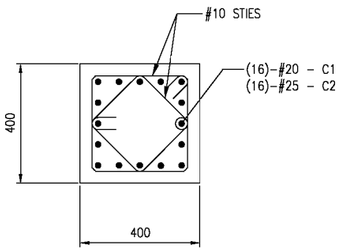

SECTIONS C1 & C2
SCALE = 1:10

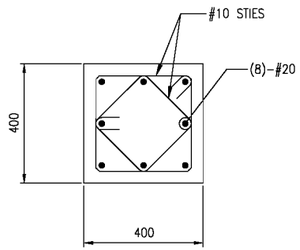

SECTION C3
SCALE = 1:10

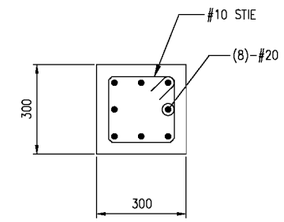

SECTION C4
SCALE = 1:10

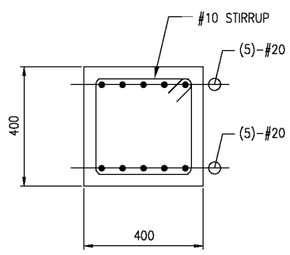

SECTION B1
SCALE = 1:10

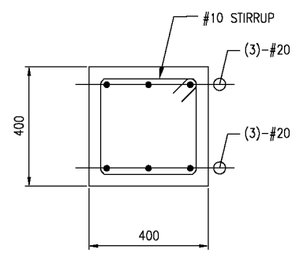

SECTION B2
SCALE = 1:10

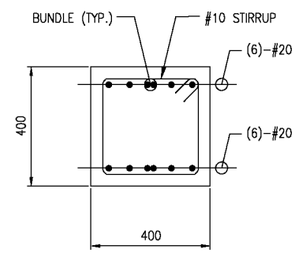

SECTION B3
SCALE = 1:10

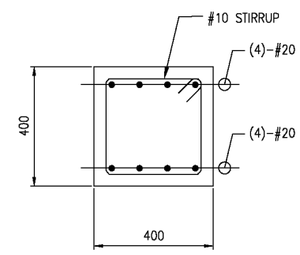

SECTION B4
SCALE = 1:10

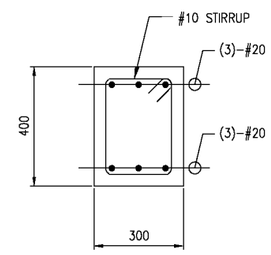

SECTION B5
SCALE = 1:10

US ARMY CORPS OF ENGINEERS
AFGHANISTAN ENGINEER DISTRICT

MARK	DESCRIPTION	DATE	APPR.	MARK	DESCRIPTION	DATE	APPR.

U.S. ARMY CORPS OF ENGINEERS
AFGHANISTAN DISTRICT
APO AE 09358

DESIGNED BY:
DWN BY: CKD BY:
DEL MUNDO
SUBMITTED BY:
DATE:
SOLICITATION NO.:
CONTRACT NO.:
FILE NAME:
PLOT SCALE: 1" = 100'
PLOT DATE:
SIZE:
FILE NAME:

TRAINING TOWER
STANDARD DESIGN
VARIOUS LOCATIONS

BEAM & COLUMN SECTIONS

SHEET REFERENCE
04-S-11

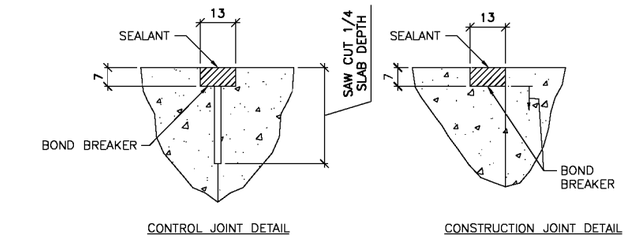

TYPICAL CONCRETE SLAB JOINT FINISH DETAILS

1 / S-12 SCALE: NTS

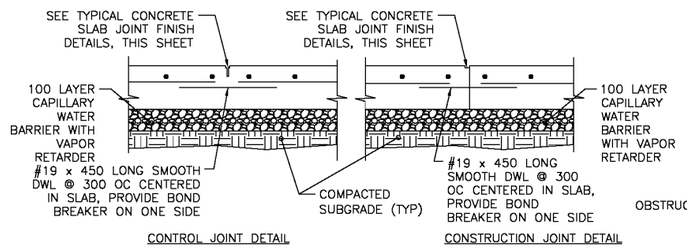

TYPICAL SLAB ON GRADE JOINT DETAIL

2 / S-12 SCALE: NTS

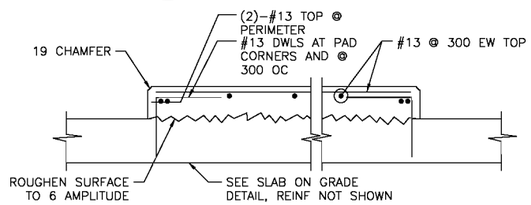

INTERIOR EQUIPMENT PAD DETAIL

3 / S-12 SCALE: NTS

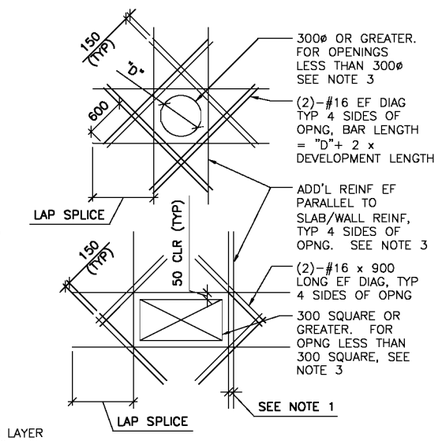

SHEAR WALL/SLAB OPENINGS

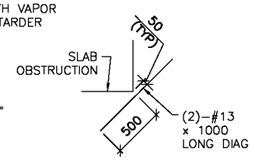

RE-ENTRANT CORNERS

DETAIL NOTES:
1. WHERE MORE THAN ONE ADDITIONAL BAR IS REQUIRED PARALLEL TO THE EXISTING SLAB/WALL REINFORCING THE ADDITIONAL REINFORCING BARS SHALL BE SPACED AT 100 ON CENTER.
2. ADDITIONAL REINFORCING PARALLEL TO THE SLAB/WALL REINFORCING SHALL BE #16 BARS THAT PROVIDE A STEEL AREA ON EACH SIDE OF THE OPENING EQUAL TO 1/2 THE AREA OF THE REINFORCING CUT BY THE OPENING.
3. FOR OPENINGS WITH SIDES OR DIAMETERS LESS THAN 300 SPREAD THE SLAB/WALL REINFORCING TO CLEAR THE OPENING.

ADD'L CONCRETE REINFORCEMENT DETAILS

4 / S-12 SCALE: NTS

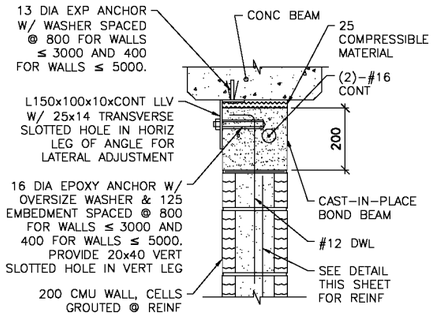

NOTE:
1. AT ANCHOR BOLTS, ADD AN ADDITIONAL 25 COMPRESSIBLE MATERIAL BELOW EXP ANCHOR HEAD.

INTERIOR BEAM

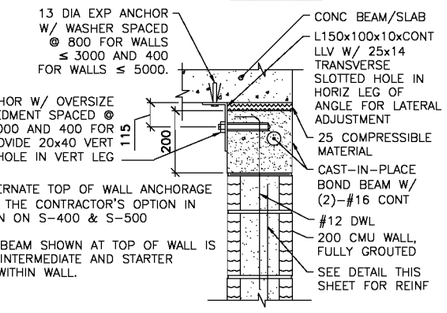

EXTERIOR WALL OR SLAB

NOTES:
1. THIS DETAIL IS AN ALTERNATE TOP OF WALL ANCHORAGE DETAIL TO BE USED AT THE CONTRACTOR'S OPTION IN LIEU OF DETAILS SHOWN ON S-400 & S-500 DRAWINGS.
2. CAST-IN-PLACE BOND BEAM SHOWN AT TOP OF WALL IS ALSO APPLICABLE FOR INTERMEDIATE AND STARTER COURSE BOND BEAMS WITHIN WALL.

ALTERNATE TOP OF CMU WALL BRACING DETAILS

5 / S-12 SCALE:

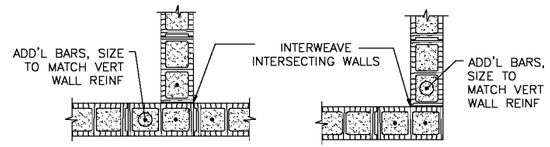

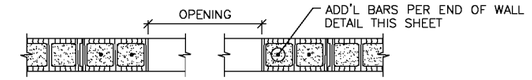

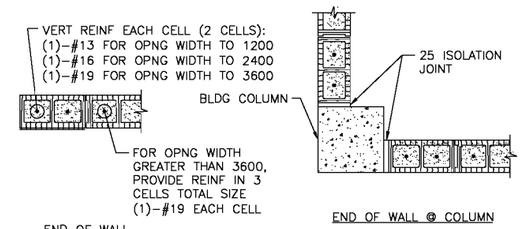

NOTES:
1. OPENING WIDTH SHALL NOT EXCEED 3600 FOR THIS TYPE OF JAMB.
2. ALL CELLS FULLY GROUTED AT EXTERIOR WALLS. AT INTERIOR WALLS, ONLY GROUT CELLS CONTAINING REINF.

TYP CMU DETAILS

6 / S-12 SCALE: NTS

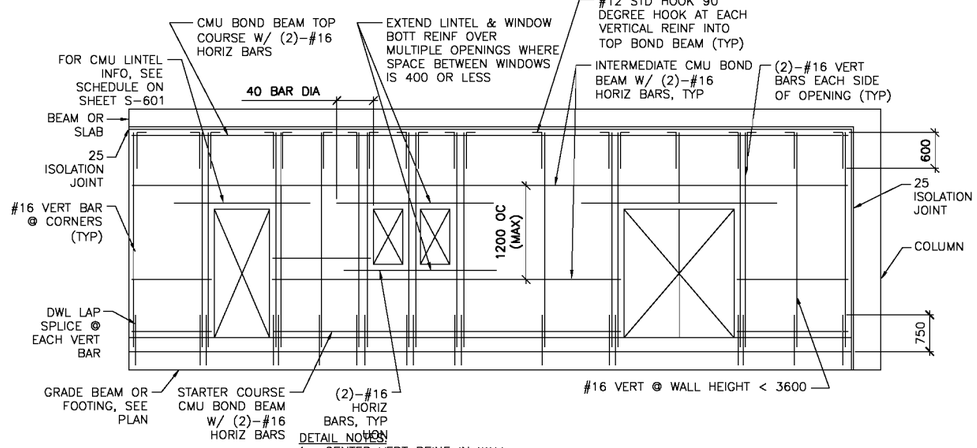

DETAIL NOTES:
1. CENTER VERT REINF IN WALL.
2. GROUT ALL CMU CELLS IN EXTERIOR WALLS & REINFORCED CELLS IN INTERIOR WALLS.
3. REFERENCE ARCH DWGS FOR JOINT INFORMATION
4. DOWELS BETWEEN TOP BOND BEAM AND BEAM/SLAB ABOVE (INCLUDING EMBEDDED PIPE SLEEVE) NOT SHOWN FOR CLARITY. SEE SPECIFIC S-500 SERIES DWGS FOR INFO.
5. FOR INFORMATION ON ALTERNATE CAST-IN-PLACE WALL BOND BEAMS, REFERENCE ALTERNATE TOP OF CMU WALL BRACING DETAILS THIS SHEET.

TYP CMU WALL REINF DETAIL

7 / S-12 SCALE: NTS

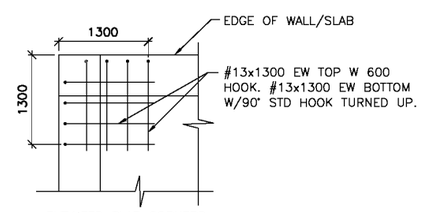

ADD'L CONCRETE REINFORCEMENT DETAILS

8 / S-12 SCALE: NTS

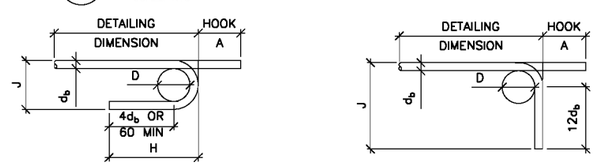

SIZES OF 180° HOOK			
BAR SIZE	A	J	APPROX H
#10	130	80	100
#13	150	100	110
#16	180	130	130
#19	200	150	150
#22	250	180	180
#25	280	200	200
#29	380	290	260
#32	430	320	290
#36	480	360	320

$D = 6d_b$ FOR #10–#25
$D = 6d_b$ FOR #29–#36
d_b = BAR DIA

SIZES OF 90° HOOK		
BAR SIZE	A	J
#10	140	150
#13	190	220
#16	230	270
#19	270	320
#22	320	370
#25	370	430
#29	420	480
#32	470	580
#36	520	610

TYP REINFORCEMENT BAR BENDING DETAILS

10 / S-12 SCALE: NTS

US ARMY CORPS OF ENGINEERS AFGHANISTAN ENGINEER DISTRICT

MARK	DESCRIPTION	DATE	APPR.	MARK	DESCRIPTION	DATE	APPR.

DESIGNED BY: DWN BY: DEL MUNDO CKD BY: SUBMITTED BY: DATE: SOLICITATION NO.: CONTRACT NO.: PLOT SCALE: 1" = 100' PLOT SCALE: SIZE: FILE NAME: FILE NAME:

U.S. ARMY CORPS OF ENGINEERS AFGHANISTAN DISTRICT APO AE 09356

TRAINING TOWER STANDARD DESIGN VARIOUS LOCATIONS

MISCELLANEOUS DETAILS

SHEET REFERENCE 04-S-12

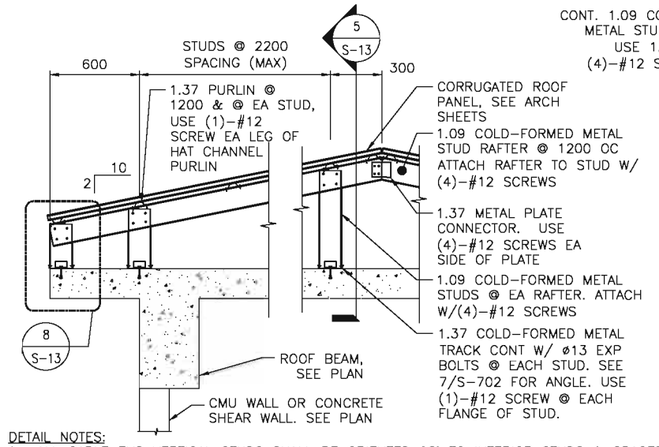

DETAIL NOTES:

1. ALL GABLE END VERTICAL STUDS SHALL BE ORIENTED 90° TO INTERIOR STUDS & SPACED @ 600 OC. GABLE END RAFTER SHALL BE 1.37 METAL TRACK SPANNING CONTINUOUSLY OVER GABLE END STUDS. INSET GIRTS AT GABLE END SHALL BE 1.09 COLD-FORMED METAL STUDS @ 1200 OC ATTACHED VIA 1.37 THICKNESS CLIP ANGLE W/ (2) #12 SCREWS EA LEG.
2. ALL INTERIOR, NON-GABLE END VERTICAL STUDS GREATER THAN 2400 IN LENGTH SHALL BE BACK-TO-BACK W/ #12 SCREWS @ 200 OC STAGGERED.

1 / S-13 TYPICAL OVERBUILT ROOF FRAMING DETAIL

SCALE: NTS

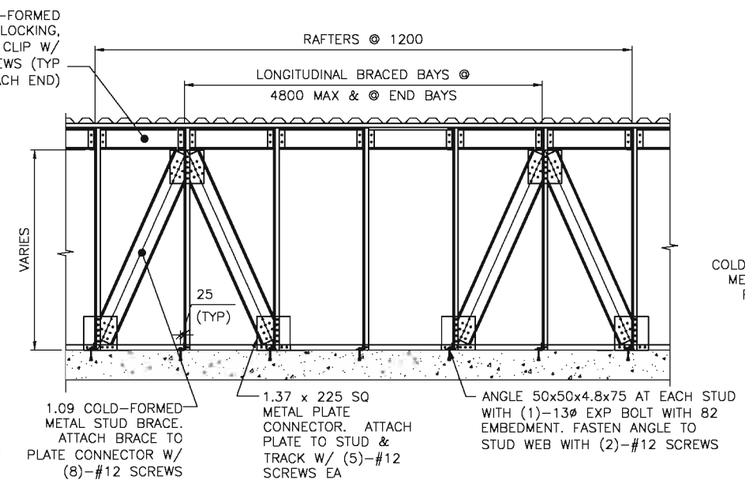

2 / S-13 SECTION

SCALE: NTS

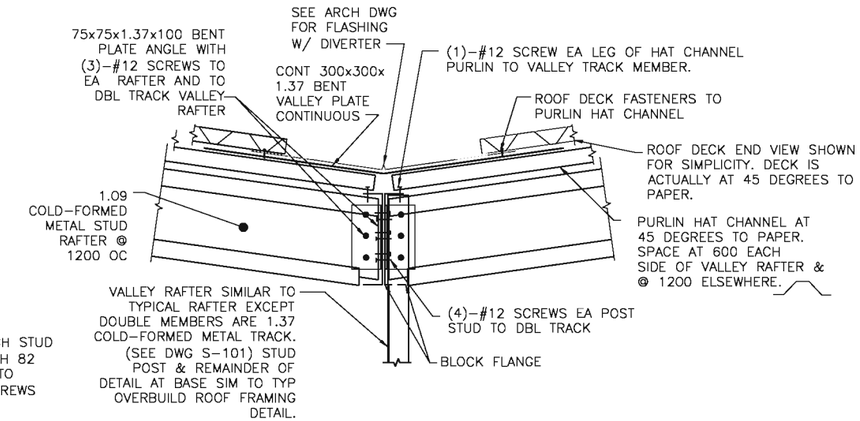

3 / S-13 TYPICAL OVERBUILT ROOF SECTION THROUGH VALLEY

SCALE: NTS

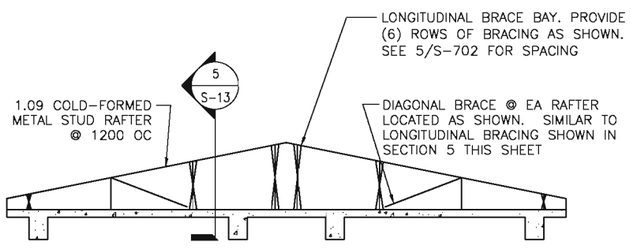

4 / S-13 TYPICAL ROOF BRACE LAYOUT

SCALE: NTS

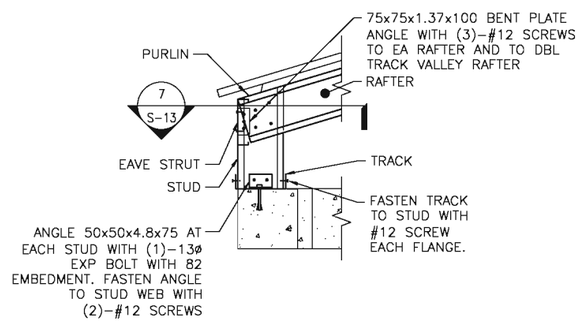

5 / S-13 DETAIL

SCALE: NTS

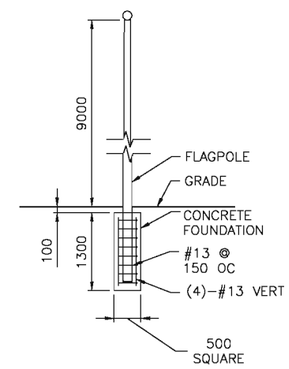

6 / S-13 DETAIL

SCALE: NTS

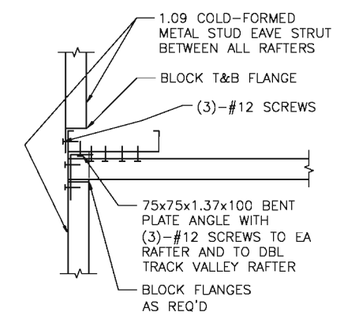

7 / S-13 SECTION

SCALE: NTS

UNLESS OTHERWISE NOTED, LINEAR DIMENSIONS SHOWN ARE IN MILLIMETERS (mm)

US ARMY CORPS OF ENGINEERS AFGHANISTAN ENGINEER DISTRICT

MARK	DESCRIPTION	DATE	APPR.	MARK	DESCRIPTION	DATE	APPR.

DESIGNED BY: | DWN BY: DEL MUNDO | CKD BY: | SUBMITTED BY: | DATE: | SOLICITATION NO.: | CONTRACT NO.: | FILE NAME: | PLOT SCALE: 1" = 100' | PLOT SCALE: | SIZE: | FILE NAME:

U.S. ARMY CORPS OF ENGINEERS
AFGHANISTAN DISTRICT
APO AE 09356

TRAINING TOWER
STANDARD DESIGN
VARIOUS LOCATIONS

ROOF DETAILS

SHEET REFERENCE
04-S-13

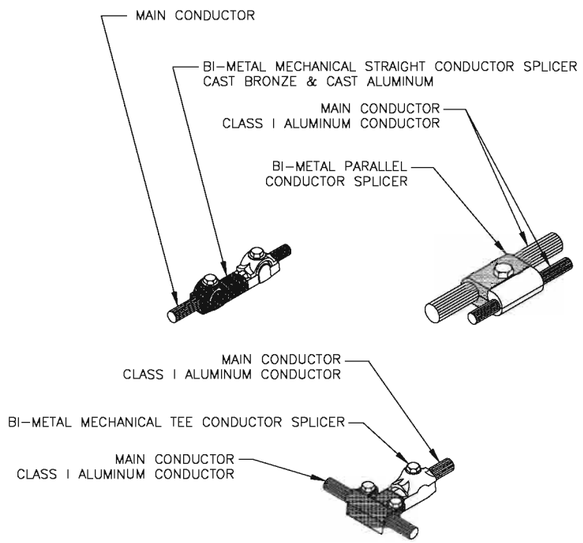

A	BI-METAL CLAMPS AND SPLICERS
04-E-101	NOT TO SCALE

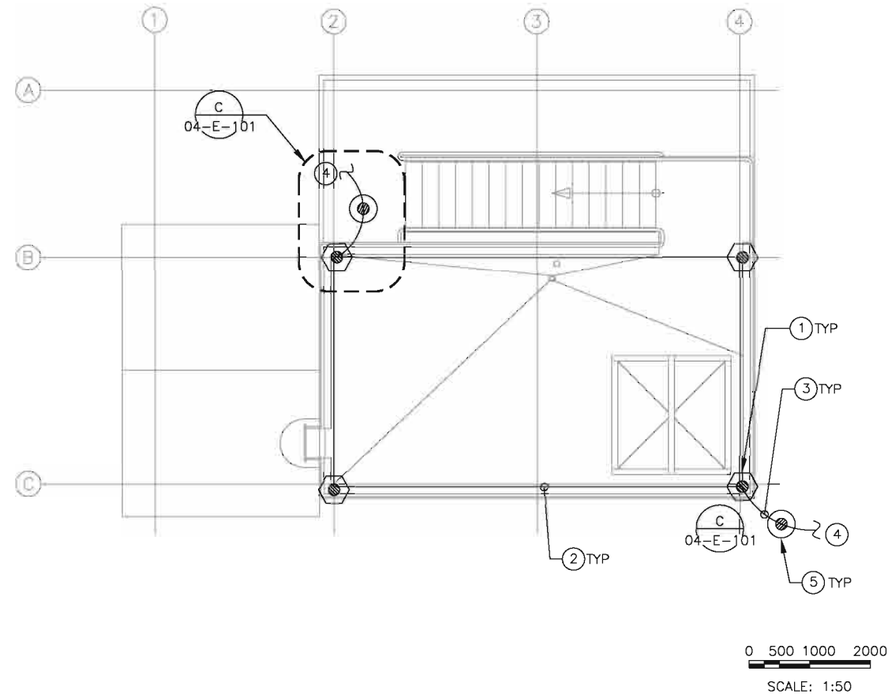

1	TRAINING TOWER ROOF PLAN LIGHTNING PROTECTION SYSTEM
04-E-101	SCALE 1:50

GENERAL NOTES:

1. SEE SHEET 00-E-001 FOR LEGEND, ABBREVIATIONS AND GENERAL NOTES.
2. CLASS I COMPONENTS SHALL APPLY FOR THE TRAINING TOWER BUILDING, HEIGHT IS NOT MORE THAN 23M (75 FEET).
3. ALL LIGHTNING PROTECTION CONDUCTORS SHALL BE FASTENED NOT MORE THAN 914.4MM (3 FEET) MAXIMUM SPACING.
4. CONDUCTORS SHALL INTERCONNECT ALL AIR TERMINALS AND SHALL FORM A TWO-WAY PATH FROM EACH AIR TERMINAL HORIZONTALLY OR DOWNWARD TO CONNECTORS WITH GROUND RODS.
5. THE INSTALLATION OF THE LIGHTNING PROTECTION SYSTEM SHALL MEET THE REQUIREMENTS OF NATIONAL FIRE PROTECTION ASSOCIATION 780 AND UNDER WRITERS LAB UL96/96A.
6. AIR TERMINALS SHALL NOT BE LESS THAN 610 MM (24 INCHES) LONG ABOVE THE OBJECT TO BE PROTECTED WHEN THE INTERVAL BETWEEN AIR TERMINALS IS NOT MORE THAN 7.6 METERS (25 FEET).
7. AIR TERMINALS SHALL BE PLACED ON ALL CHIMNEYS, VENTS, AND ROOF TOP METAL BODIES WHEN SUCH CHIMNEYS, VENTS OR ROOF TOP METAL BODIES ARE NOT WITHIN A ZONE OF PROTECTION.
8. AT LEAST TWO DOWN CONDUCTORS SHALL BE INSTALLED.
9. RADIUS OF BEND SHALL NOT BE LESS THAN 203 MM (8 INCHES).
10. PROVIDE #70MM² (#2/0 AWG) COPPER GROUNDING CONDUCTORS FOR THE LIGHTNING PROTECTION GROUNDING. ALL EXTERIOR GROUNDING CONDUCTORS SHALL BE BURIED A MINIMUM OF 762MM (30") BELOW GRADE OR 152.4MM (6") BELOW FROST LINE, WHICHEVER IS GREATER.

KEY NOTES:

1. AIR TERMINAL SHALL BE 12.7MM X 609.6MM (1/2" X 24") ALUMINUM, 90 DEGREES VERTICAL. MOUNT AND SUPPORT AIR TERMINALS ON 41MM (1.5") DIAMETER POLE SCHEDULE 40, MAINTAIN MINIMUM CLEAR HEIGHT OF POLE 3048MM ABOVE ROOF. SEE STRUCTURE DRAWINGS FOR LOCATION OF POLES AND DETAILS. SEE DETAIL B/D4-E-101.
2. MAIN CONDUCTORS SHALL BE (28 STRAND, 14 GAUGE CLASS 1 ALUMINUM ROOF CABLE, 58.9 KG/304.8M (130 POUNDS/1000 FEET), 15.875 MM DIAMETER, 70 MM² (#1/0)).
3. ALUMINUM DOWN CONDUCTORS SHALL BE CONNECTED TO COPPER DOWN CONDUCTOR AT LEAST 457MM (18 INCHES) ABOVE GRADE LEVEL. BIMETALLIC CONNECTORS WILL BE USED. SEE DETAILS ON THIS SHEET FOR BI-METALLIC CONNECTIONS.
4. SEE SHEET 00-E-102 FOR CONTINUATION TO SITE GROUNDING PLAN.
5. PROVIDE AND INSTALL 19MMX3048MM (3/4" X 10'-0") COPPER CLAD STEEL GROUND RODS. IF ROCK IS ENCOUNTERED, GROUND ROD MAY BE INSTALLED WITH A MAXIMUM VARIATION OF 30 DEGREES FROM VERTICAL.

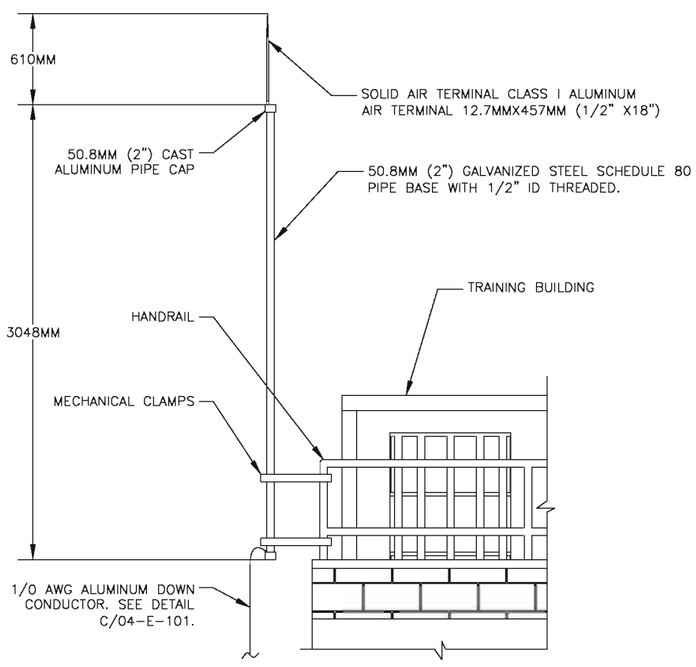

B	AIR TERMINAL MOUNTING DETAIL
04-E-101	NOT TO SCALE

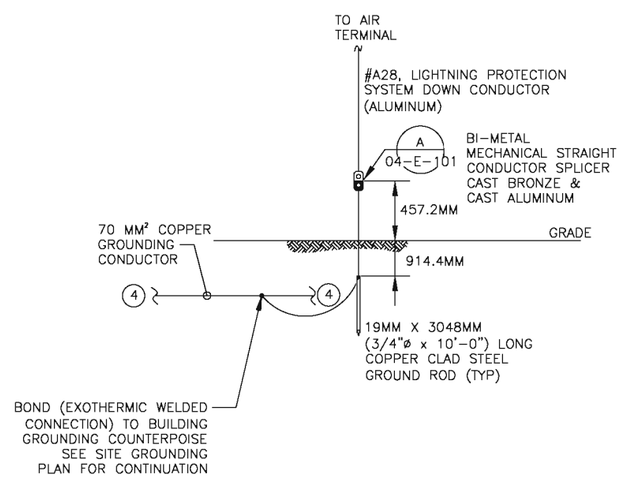

C	BONDING LIGHTNING PROTECTION TO GROUNDING
04-E-101	NOT TO SCALE

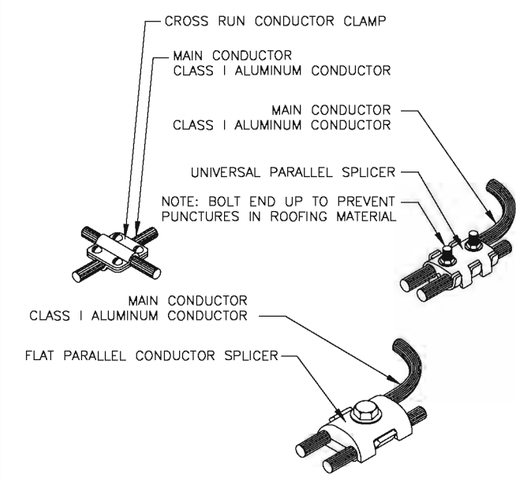

D	CABLE CLAMPS AND SPLICERS
04-E-101	NOT TO SCALE

US Army Corps of Engineers®
AFGHANISTAN ENGINEER DISTRICT

MARK	DESCRIPTION	DATE	APPR.	MARK	DESCRIPTION	DATE	APPR.

U.S. ARMY CORPS OF ENGINEERS
AFGHANISTAN DISTRICT
APO AE 09356

DESIGNED BY: | DATE:
DWN BY: | CKD BY: | SOLICITATION NO.:
SUBMITTED BY: | CONTRACT NO.:
PLOT SCALE: 1:1 | PLOT DATE: | FILE NUMBER:
SIZE: ANSI D | FILE NAME: MS11_04-E-101.dgn

STANDARD DESIGN
MS-11 - FIRE STATION
VARIOUS LOCATIONS, AFGHANISTAN

TRAINING TOWER ELECTRICAL PLAN

SHEET IDENTIFICATION
04-E-101

20 METER WATER TOWER

U.S. Army Corps
OF Engineers
AFGHANISTAN ENGINEER DISTRICT
AFGHANISTAN, APO AE, 09356

17 DECEMBER 2009

ENGINEERING AND CONSTRUCTION DIVISION
US ARMY ENGINEER DISTRICT, AFGHANISTAN
APO AE, 09356

20 METER WATER TOWER

APPENDIX A

AFGHANISTAN

SECTION/DETAIL CROSS REFERENCING CONVENTIONS

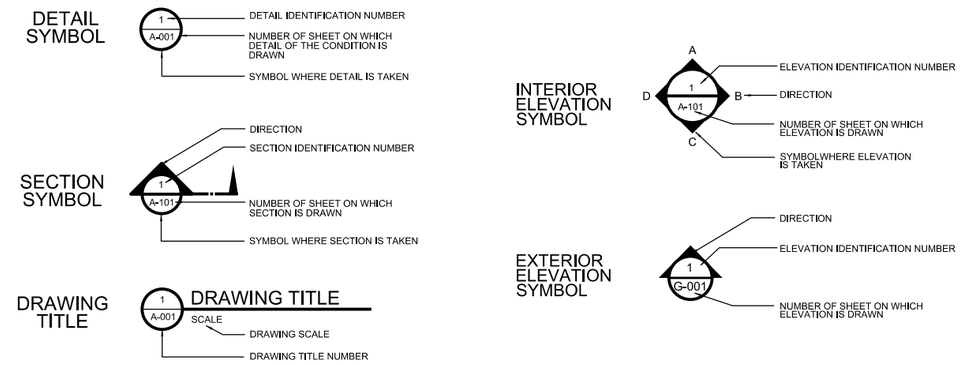

SCHEDULE OF DRAWINGS

SHEET NO	DWG CODE	SHEET REFERENCE NO	DESCRIPTION	REV STATUS
			GENERAL	
			COVER SHEET	
1		G-001	TITLE SHEET & SCHEDULE OF DRAWINGS	
			STRUCTURAL	
2		S-01	GENERAL NOTES	
3		S-02	FOUNDATION PLAN	
4		S-03	PLATFORM AND CATWALK FRAMING PLAN	
5		S-04	ELEVATIONS	
6		S-05	FOUNDATION SECTIONS	
7		S-06	FOUNDATION STEEL FRAMING SECTIONS	
8		S-07	SECTIONS AND DETAILS	
9		S-08	SECTIONS AND DETAILS	
10		S-09	SECTIONS AND DETAILS	
11		S-10	MEMBER DETAILS	
12		S-11	MEMBER DETAILS	
13		S-12	MEMBER DETAILS	
14		S-13	MEMBER DETAILS	
15		S-14	MEMBER DETAILS	
16		S-15	MEMBER DETAILS	
17		S-16	MEMBER DETAILS	
18		S-17	MEMBER DETAILS	
19		S-18	MEMBER DETAILS	
20		S-19	MEMBER DETAILS	
21		S-20	MEMBER DETAILS	
			PLUMBING	
22		P-01	WATER TANK, PIPING AND INSULATION	
23		P-02	PIPING AND INSULATION DETAILS	
24		P-03	WELL HOUSE SECTION PIPING	
25		P-04	ELEVATION AND DETAIL	
			ELECTRICAL	
26		E-01	LIGHTNING PROTECTION DETAILS	

PROJECT COORDINATION

U.S. ARMY ENGINEER DISTRICT, AFGHANISTAN

PROJECT MANAGER — DATE

CHIEF, DESIGN BRANCH — DATE

THIS PROJECT WAS DESIGNED BY AFGHANASTAN ENGINEER DISTRICT OF THE U.S ARMY CORPS OF ENGINEERS. THE INITIALS OR SIGNATURES AND REGISTRATION DESIGNATIONS OF INDIVIDUALS APPEAR ON THESE DOCUMENTS WITHIN THE SCOPE OF THEIR EMPLOYMENT AS REQUIRED BY ER 1110-1-8152.

US ARMY CORPS OF ENGINEERS
AFGHANISTAN ENGINEER DISTRICT

SYMBOL	DESCRIPTION	DATE	APPR.

SYMBOL	DESCRIPTION	DATE	APPR.

DESIGNED BY: DWN BY: CKD BY: REVIEWED BY: SUBMITTED BY:
DATE: 17 DEC. 2009
DESIGN FILE NO.:
DRAWING CODE:
FILE NAME: G-TS.DGN
PLOT SCALE:
PLOT DATE: XX-XX-XXX
REV:

U.S. ARMY ENGINEER DISTRICT, AFGHANISTAN
CORPS OF ENGINEERS
APO AE 96338

ENGINEERING AND CONSTRUCTION DIVISION

AFGHANISTAN ENGINEER DISTRICT
20 METER WATER TOWER

TITLE SHEET
SCHEDULE OF DRAWINGS

SHEET REFERENCE NUMBER:
G-001

SHEET 1 OF 26

GENERAL:

1. CONTRACTOR SHALL VERIFY ALL DIMENSIONS AND CONDITIONS AFFECTING THE WORK AT JOBSITE.

2. ALL STRUCTURAL WORK AND MATERIALS SHALL CONFORM TO THE REQUIREMENTS OF THE PROJECT.

3. FOR LOCATION AND DIMENSIONS OF GROOVES, REGLETS, SLEEVES, OPENINGS, AND EMBEDDED OR ATTACHED ITEMS, REFER TO ELECTRICAL, AND PIPING DRAWINGS.

CODES:

1. ALL PARTS SHALL BE FURNISHED AND ERECTED ACCORDING TO THE LATEST VERSION OF THE APPLICABLE CODES OF THE FOLLOWING:

AMERICAN CONCRETE INSTITUTE	(ACI)
AMERICAN INSTITUTE OF STEEL CONSTRUCTION	(AISC)
AMERICAN IRON AND STEEL INSTITUTE	(AISI)
AMERICAN WATER WORKS ASSOCIATION	(AWWA)

2. ALL PARTS SHALL BE FURNISHED AND ERECTED ACCORDING TO THE APPLICABLE CODES OF THE FOLLOWING:

MINIMUM DESIGN LOADS FOR BUILDINGS AND OTHER STRUCTURES	(ASCE 7-05)
INTERNATIONAL BUILDING CODE	(IBC-2006)
BUILDING CODE REQUIREMENTS FOR STRUCTURAL CONCRETE	(ACI 318-08)
SPECIFICATIONS FOR STRUCTURAL STEEL BUILDINGS	(AISC 13TH EDITION)

DESIGN LOADS:

1. ROOF LOADING

A. LIVE LOAD 195 KG/SQ METER (40 PSF)
B. SNOW LOAD 75 KG/SQ METER (15 PSF)
C. COLLATERAL LOAD 50 KG/SQ METER (10 PSF)

2. WIND LOADING

A. BASIC WIND SPEED 135 KM/HR (85 MPH)
B. EXPOSURE CATEGORY "B"
C. IMPORTANCE FACTOR, Iw = 1.00
D. BUILDING CATEGORY "II"

3. SEISMIC LOADING:

A. Ss = 1.28g
B. S1 = 0.51g
C. SEISMIC USE GROUP "I"
D. SITE CLASSIFICATION "D"
E. IMPORTANCE FACTOR I = 1.0

BASIC SEISMIC FORCE RESISTING SYSTEM:

CROSS-BRACED COLUMN-SUPPORTED ELEVATED TANK
DESIGN BASE SHEAR: 0.284W

ANALYSIS PROCEDURE: EQUIVALENT LATERAL FORCE METHOD

4. THE WATER TOWER IS DESIGNED TO SUPPORT A 26,500 LITER (7,000 GALLON) WATER TANK, UNIFORMLY LOADING THE PLATFORM IN A BALANCED CONFIGURATION. SEE SHEET S-3 FOR TANK LIMITS.

600 0 600mm
SCALE: 1 = 30

UNLESS NOTED OTHERWISE, LINEAR DIMENSIONS ARE IN MILLIMETERS.

FOUNDATIONS:

1. ALL FOOTINGS SHALL BEAR ON SOIL CAPABLE OF SUSTAINING THE LOADS. GEOTECHNICAL INVESTIGATIONS TO VERIFY THIS REQUIREMENT ARE CONTAINED IN THE AED DESIGN GUIDE – GEOTECHNICAL INVESTIGATIONS (LATEST VERSION). ALL REQUIREMENTS OF THIS PUBLICATION SHALL BE FOLLOWED, WITH EMPHASIS ON PARAGRAPH 2.2, DEPTH, LOCATION, SPACINT OF EXPLORATION.

2. FOUNDATION DESIGNED FOR A MAXIMUM BEARING CAPACITY OF 7323 KG/SQ. METER (1500 PSF).

3. ELEVATIONS SHOWN ON PLANS FOR TOP OF FOOTINGS ARE MINIMUM DEPTH. BOTTOM OF FOOTING SHALL BE A MINIMUM 800mm BELOW GRADE. DIFFERENT OR UNUSUAL CONDITIONS SHALL BE REPORTED TO THE CONTRACTING OFFICER.

4. ALL FOOTING REINFORCEMENT SHALL BE SECURELY SUPPORTED ABOVE GROUND. SUPPORT REINFORCEMENT WITH CONCRETE BRICK OR WITH ADEQUATE NUMBER AND SIZE OF REBAR CHAIRS.

5. ALL FOUNDATION FORMWORK SHALL BE ADEQUATELY PREPARED FOR CONCRETE PLACEMENT; SUFFICIENTLY BRACED; PROPER ELEVATIONS AND ALIGNMENT; NO STANDING WATER OR DEBRIS; ETC.

CONCRETE:

1. STRUCTURAL CONCRETE FOR THE BUILDING STRUCTURE SHALL HAVE THE FOLLOWING PROPERTIES:

ALL CONCRETE
UNLESS NOTED OTHERWISE: f'c = 280 KG/SQ. CM (4,000 PSI) AT 28 DAYS WITH MAXIMUM WATER/CEMENT RATIO OF 0.45. MIX DESIGN SHALL BE APPROVED BY COR PRIOR TO PLACEMENT.

2. ALL REINFORCING STEEL SHALL BE DEFORMED BARS CONFORMING TO ASTM A615 GRADE 60 UNLESS NOTED OTHERWISE.

3. MINIMUM PROTECTIVE COVER OF REINFORCEMENT (SEE DETAILS) SHALL BE AS FOLLOWS:

FOOTINGS, 75mm CLEAR BOTTOM AND SIDES, 40mm CLEAR TOP.
CONCRETE PIERS, 40mm CLEAR TO TIES.

4. MINIMUM CONCRETE SPLICES AND HOOKS FOR REINFORCING STEEL SHALL CONFORM TO ACI 318, CURRENT EDITION.

5. CONCRETE WORK SHALL BE COORDINATED WITH DRAINS, UNDERGROUND UTILITIES, MECHANICAL, ELECTRICAL, AND ARCHITECTURAL PLANS. CONCRETE SHALL NOT BE CAST UNTIL THESE ITEMS HAVE BEEN INSTALLED AND ACCEPTED.

6. CONCRETE OPERATIONS SHALL BE APPROVED BY COR PRIOR TO CONCRETE PLACEMENT. PLAN SHALL BE IN WRITING AND INCLUDE THE FOLLOWING:

a. PORTLAND CEMENT CONCRETE (PCC) PLACEMENT.

b. EMBEDDED METALS PLAN SHALL DESCRIBE HOW REINFORCEMENT AND TOWER LEG ANCHORAGE PLATES WILL BE INSTALLED. SPECIFIC DISCUSSION OF ANCHORAGE PLATES SHALL INCLUDE HOW THESE CRITICAL COMPONENTS WILL BE ACCURATELY LOCATED AND SECURED FOR TRUE PLAN, ELEVATION AND VERTICAL POSITION, WITH NO ROTATION, PRIOR TO, DURING AND AFTER CONCRETING OPERATIONS. THE FOUR CORNERS SHALL BE LAID OUT TO BE DIMENSIONALLY SQUARE AS PER DRAWINGS.

c. PLAN SHALL ADDRESS CONCRETE DELIVERY (BATCHING EQUIPMENT, CAPACITY AND LOCATION); CONCRETE PLACEMENT OPERATIONS INTO THE FORMWORK; NUMBER AND USE OF VIBRATORS; FIELD AND LABORATORY TESTING REQUIRED; HOT OR COLD WEATHER PLACEMENT REQUIREMENTS; MANPOWER REQUIRED; AND OTHER PROCEDURES TO BE FOLLOWED TO COMPLETE SUCCESSFUL CONCRETING OPERATIONS. SUFFICIENT CONCRETE DELIVERY SHALL BE SHOWN TO ELIMINATE THE POTENTIAL FOR CONCRETE DEFECTS IN THE FINAL PRODUCT, INCLUDING COLD JOINTS, VOIDS, SEGREGATION OF AGGREGATE, AND EXCESSIVE REWORK LEADING TO STRENGTH REDUCTION.

STRUCTURAL STEEL:

1. STRUCTURAL STEEL SHALL BE FABRICATED AND ERECTED IN ACCORDANCE WITH THE AMERICAN INSTITUTE OF STEEL CONSTRUCTION, "SPECIFICATION FOR STRUCTURAL STEEL BUILDINGS", 2005 (AISC MANUAL, 13TH EDITION).

2. STEEL SHALL CONFORM TO THE FOLLOWING REQUIREMENTS UNLESS NOTED OTHERWISE:

MISCELLANEOUS PLATES AND ANGLES – ASTM A36 250MPa (Fy = 36 KSI)
"W" SHAPES – ASTM A36 250MPa (Fy = 36 KSI)

3. NO STRUCTURAL STEEL SHALL BE FABRICATED OR ERECTED UNTIL SHOP DRAWINGS HAVE BEEN APPROVED.

4. NO HOLES OTHER THAN THOSE SPECIFICALLY DETAILED SHALL BE ALLOWED THROUGH STRUCTURAL STEEL MEMBERS. FIELD CUTTING OF STEEL SHALL NOT BE PERMITTED WITHOUT APPROVAL OF THE CONTRACTING OFFICER.

5. THE CONTRACTOR SHALL VERIFY ALL SHOP DRAWING DIMENSIONS WITH THE STRUCTURAL PLANS AND DETAILS, AND WITH DIMENSIONS OF COLUMN LAYOUT.

6. BOLTED CONNECTIONS: BOLTS SHALL CONFORM TO ASTM A307, 20MM DIAMETER MINIMUM UNLESS NOTED OTHERWISE AND HOT-DIP GALVANIZED; NUTS SHALL CONFORM TO ASTM A563 HOT DIP GALVANIZED; WASHERS SHALL NOT BE USED.

7. BOLTS SHALL BE TIGHTENED TO ADEQUATELY DEVELOP BOLT TENSION.

FABRICATION NOTES

1. THE CONTRACTOR SHALL SUBMIT A SEPARATE, SPECIFIC ERECTION AND SAFETY PLAN ADDRESSING ALL FACETS OF TOWER CONSTRUCTION.

2. THIS SET OF DRAWINGS WAS DEVELOPED AS A SOLUTION TO MEET AED REQUIREMENTS FOR THE CONSTRUCTION OF WATER TOWERS THAT MEET U.S. STANDARDS FOR DESIGN, TO INCLUDE SEISMIC CRITERIA, USING MATERIALS AND CONSTRUCTION METHODS THAT REDUCE OR ELIMINATE THE NEED FOR LARGE CRANES THAT MAY NOT BE ABLE TO ACCESS PROJECT SITES, AND ENABLE EASE OF CONSTRUCTION QUALITY CONTROL. WATER TOWER HAS BEEN DESIGNED TO SUPPORT A PRE-FABRICATED WATER TANK.

3. ALL ANGLES, BEAMS AND PLATES ARE TO BE FABRICATED IN A SHOP WHERE THE STRICTEST TOLERANCES FOR FABRICATION (MEMBER LENGTHS, LOCATION AND SIZE OF BOLT HOLES) CAN BE MAINTAINED. THESE COMPONENTS WOULD THEN BE TRANSPORTED TO PROJECT SITES AND ERECTED WITHOUT THE USE OF HEAVY EQUIPMENT AS THE MAXIMUM WEIGHT PER PIECE IS UNDER 90 KG. THIS DESIGN SHALL NOT BE MODIFIED, IN EITHER THE FABRICATION SHOP OR AT THE PROJECT SITE. UNDER NO CONDITIONS SHALL BOLT HOLES BE MODIFIED OR ADDED AT THE PROJECT SITE AS A RESULT OF INACCURATE CONSTRUCTION PRACTICES. CONTRACTOR SHALL ASSEMBLE PLATFORM IN SHOP, POSITION STEEL CHECKER PLATE SECTIONS IN FINAL LOCATION, AND DRILL HOLES IN PLATE TO ALIGH WITH FLANGES OF STRUCTURAL MEMBERS (SEE FUTHER NOTES ON S-3). LIMITED FIELD DRILLING OF HOLES FOR WATER TANK ERECTION MAY BE REQUIRED AND WILL BE SUBMITTED FOR APPROVAL.

4. IF THE CONTRACTOR CANNOT OBTAIN THE REQUIRED ANGLE, BEAM, OR PLATES, ANY MODIFICATIONS OR SUBSTITUTIONS WILL REQUIRE A SUBMISSION OF COMPLETE ALTERNATE FABRICATION DRAWINGS FOR REVIEW AND APPROVAL, AND ONLY INCREASES IN MEMBER SIZE WILL BE CONSIDERED.

5. WELDING WILL ABSOLUTELY NOT BE ALLOWED ON THIS TOWER.

6. FABRICATION SHALL BE DONE IN A SHOP WITH TOLERANCES PER AISC MANUAL OF STEEL CONSTRUCTION AND ALL ADDITIONAL CODES REFERENCED THERE IN. CONTRACTOR SHALL ESTABLISH A SYSTEM OF MARKING MEMBERS TO FACILITATE ASSEMBLY IN THE FIELD.

7. STEEL FINISH REQUIREMENTS SHALL INCLUDE REMOVAL OF ALL SCALE AND RUST PRIOR TO APPLICATION OF A BASE COAT PRIMER ON ALL METAL SURFACES. THIS WILL BE FOLLOWED BY TWO FINISH COATS OF EPOXY ENAMEL PAINT. IF AVAILABLE, HOT-DIP GALVANIZING OF TOWER ELEMENTS IS ACCEPTABLE, BUT GALVANIZED BOLTS AND NUTS MUST THEN BE PROVIDED, AND CARE MUST BE TAKEN TO PREVENT DAMAGING THE SURFACE FINISH.

8. TO AID IN MEANS OF CONSTRUCTION, THE 2L100x100 HANDRAIL PIECE HAS BEEN DESIGNED FOR A LOAD OF 250KG AT MIDSPAN. THE CONTRACTOR MAY USE THIS PIECE IN A PULLEY MECHANISM TO RAISE THE PLATFORM FRAMING TO THE REQUIRED ELEVATION. THE CONTRACTOR ASSUMES ALL RESPONSIBILITY FOR MEANS OF CONSTRUCTION AND SHALL NOT HOLD THE GOVERNMENT LIABLE.

9. FIT-UP FOR DIMENSIONAL CHECK SHALL BE MADE BY THE CONTRACTOR.

WATER TANK

1. WATER TOWER HAS BEEN DESIGNED TO ACCEPT A PRE-FABRICATED WATER TANK. ONLY METAL TANKS SHALL BE PERMITTED. FULL DETAILS OF THE PROPOSED TANK SHALL BE SUBMITTED FOR APPROVAL.

2. A PARTIAL LIST OF WTER TANK SUPPLIERS:

http://www.alibaba.com/product-free/100696118/Panel Water tank.html

http://www.alibaba.com/product/my100479764-100277497-0/prodductdetail.html

http://www.modutank.com/

http://www.binasteel.com.my/stainless-steel-tank.html

http://www.sunnik.com.my/products01.htm

http://www.watertank.com/products.asp#eltank

3. CONTRACTOR SHALL COORDINATE WATER TANK CONNECTIONS WITH SHOP FABRICATOR.

US Army Corps of Engineers ®
Mobile District

Symbol	No.	Description	Date	Approved
		Revisions		

Date: 17 DECEMBER 2009
Contract No:
CADD CODE: M010TG17
Solicitation Number:
FILENAME:
Designed By:
Drawn By:
Checked By:
Reviewed By:
SIZE: 559x864mm

U.S. ARMY ENGINEER DISTRICT
CORPS OF ENGINEERS
MOBILE, ALABAMA

AFGHANISTAN ENGINEER DISTRICT
20 METER WATER TOWER

GENERAL NOTES

SHEET IDENTIFICATION
S-1

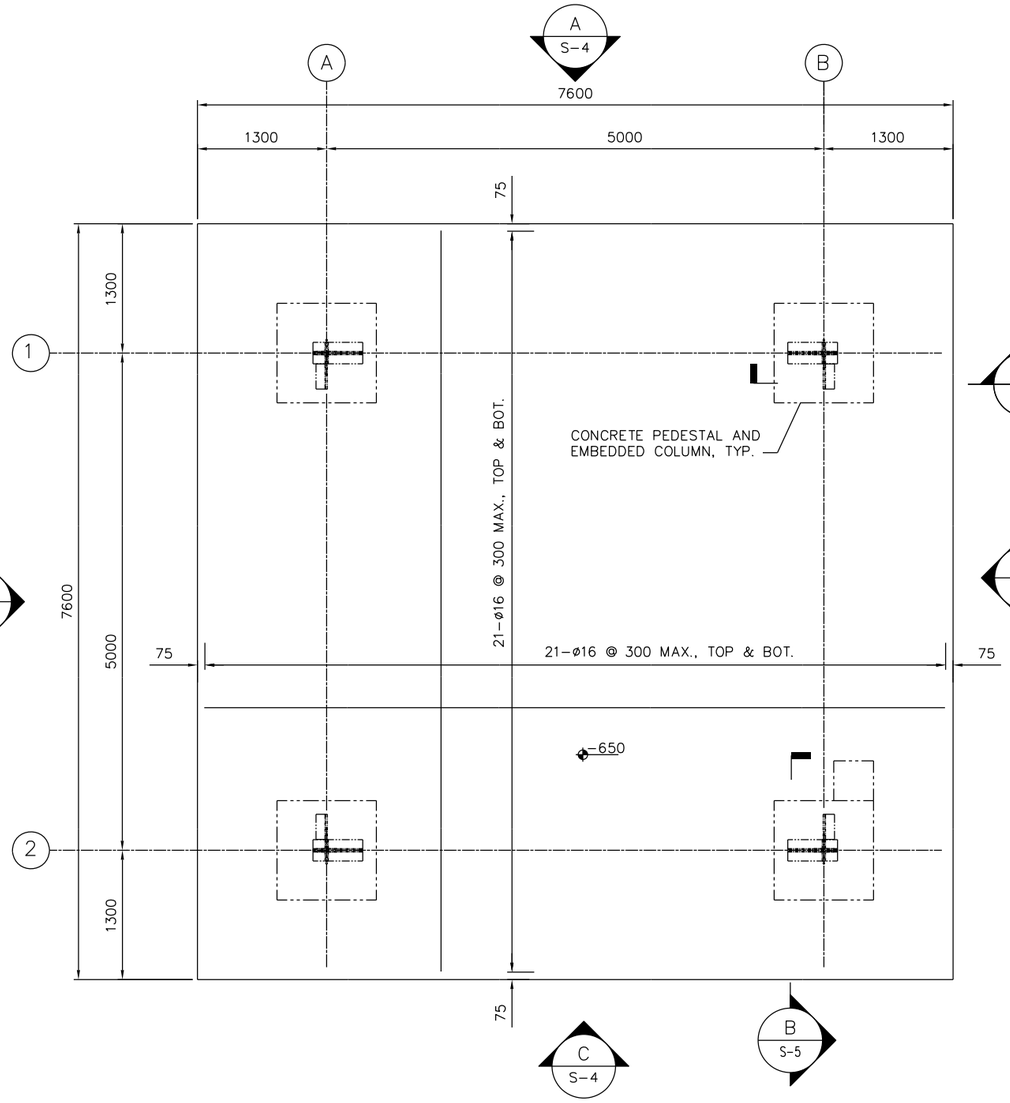

FOUNDATION PLAN
AT ELEVATION -650mm
1:30

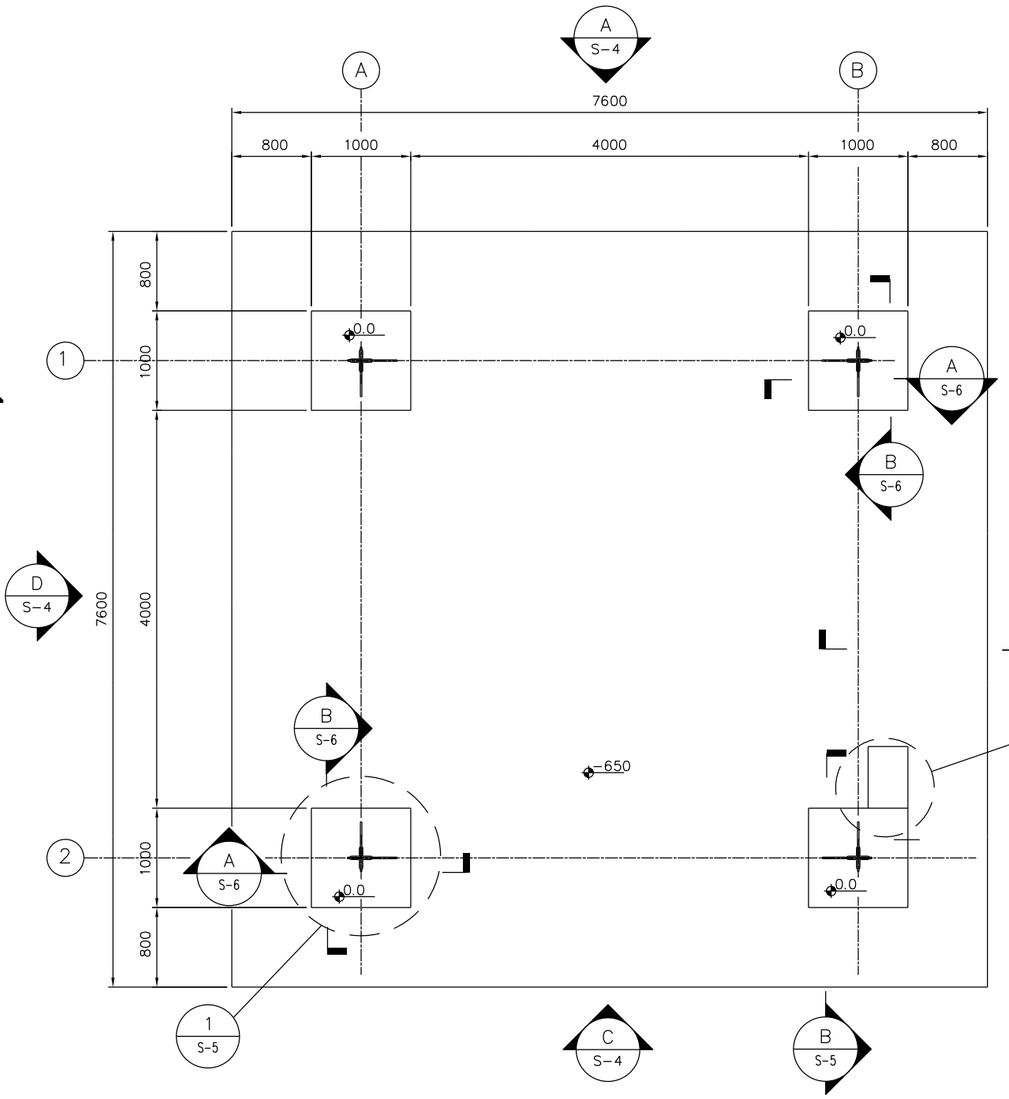

FOUNDATION PLAN
AT ELEVATION 0.0mm
1:30

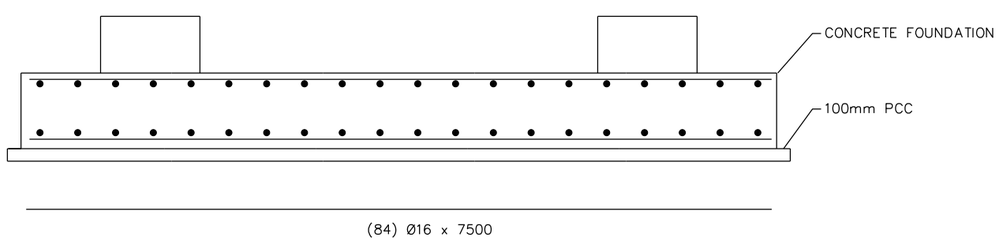

REBAR DETAIL

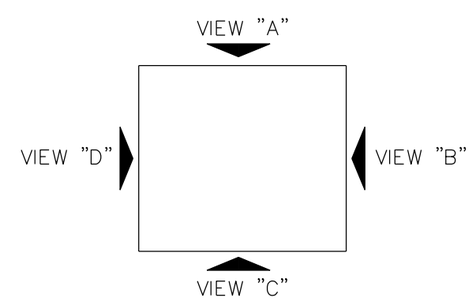

NOTES:

1. TOWER WAS DESIGNED FOR A 535mm BACKFILL OVER THE FOUNDATION SLAB. THE PEDESTALS SHALL BE A MAXIMUM OF 115mm ABOVE GRADE.

600 0 600mm
SCALE: 1 = 30

UNLESS NOTED OTHERWISE, LINEAR DIMENSIONS ARE IN MILLIMETERS.

US Army Corps of Engineers
Mobile District

Symbol	No.	Description	Date	Approved
		Revisions		

Designed By:
Drawn By:
Checked By:
Reviewed By:
Date: 17 DECEMBER 2009
Contract No:
CADD CODE: MOTOG17
Solicitation Number:
SIZE: 559x864mm
FILENAME:

U.S. ARMY ENGINEER DISTRICT
CORPS OF ENGINEERS
MOBILE, ALABAMA

AFGHANISTAN ENGINEER DISTRICT
20 METER WATER TOWER

FOUNDATION PLAN

SHEET IDENTIFICATION
S-2

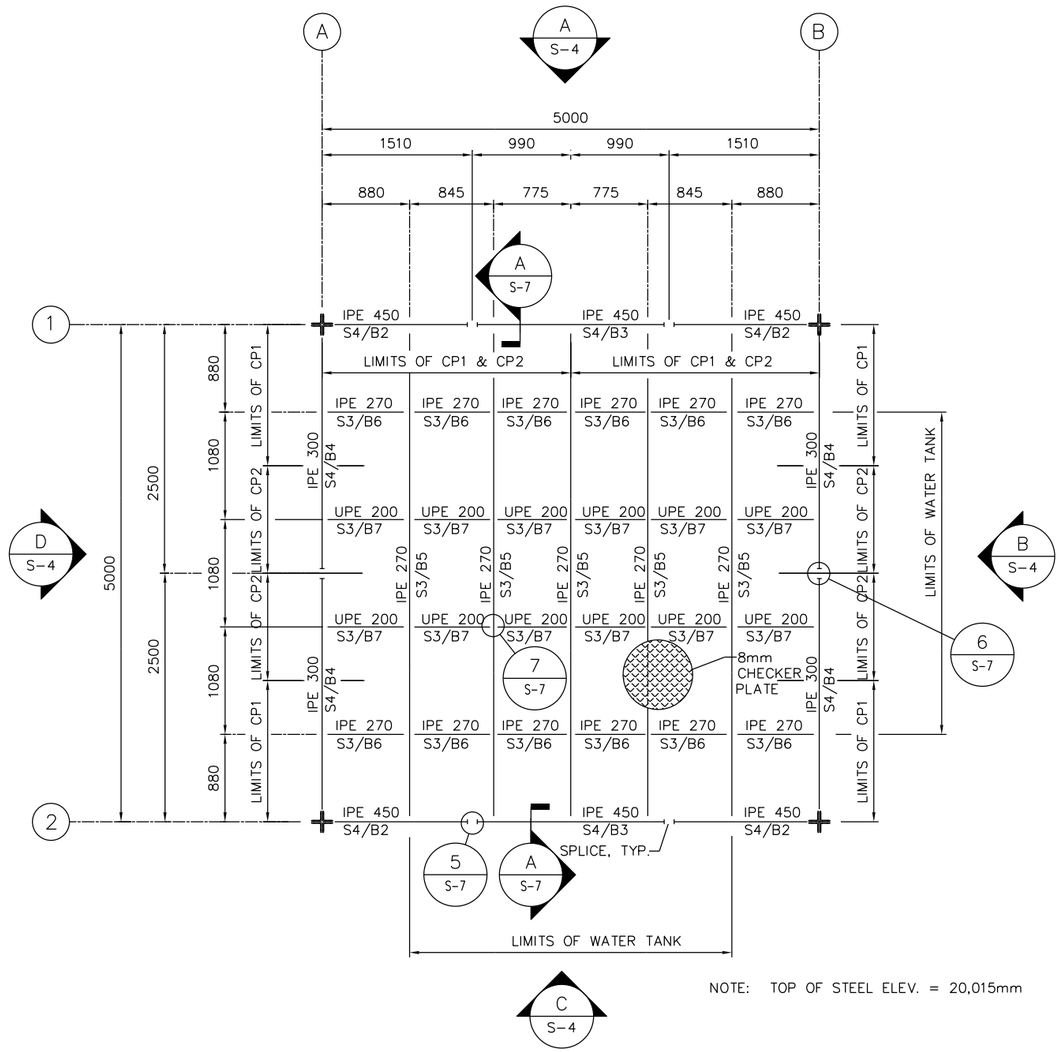

NOTE: TOP OF STEEL ELEV. = 20,015mm

PLATFORM FRAMING PLAN

1:30

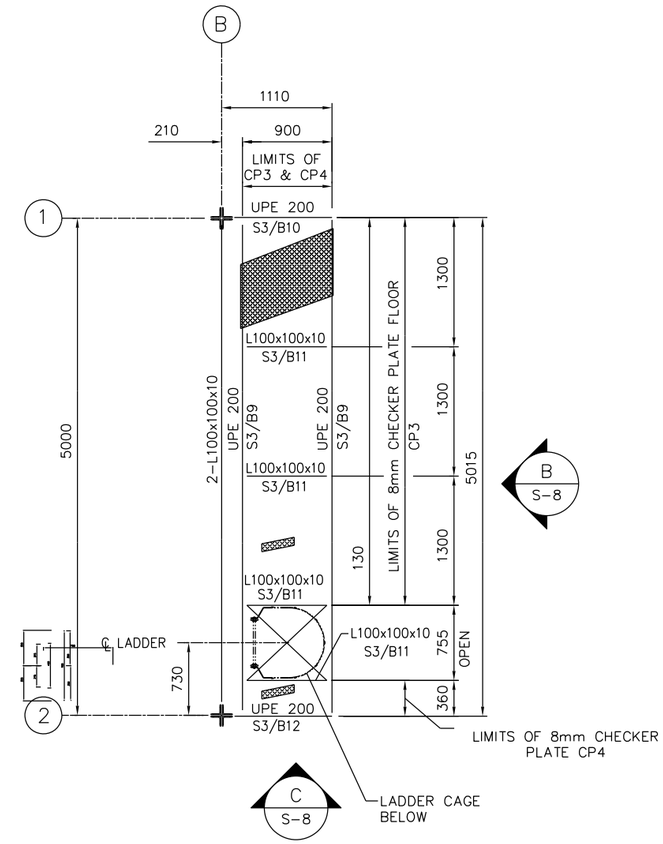

NOTE: TOP OF PLATFORM STEEL ELEV. = 9790mm

STAIR LANDING FRAMING PLAN

1:30

CHECKER PLATE NOTES:

PLATFORM

1. PLATFORM CHECKER PLATE SHALL BE INSTALLED IN SIX (6) SEPARATE PIECES; FOUR (4) EACH CP1'S AND TWO (2) EACH CP2'S.

2. PLATES WILL BE ATTACHED WITH 12mm ø BOLTS TO THE SUPPORTING MEMBERS AT A MAXIMUM SPACING IF 700mm AROUND PERIMETER BEAMS AND WALKWAY AREA. COORDINATE BOLT LOCATION AND INTERFERENCE WITH WATER TANK ON BOLTS UNDER THE WATER TANK.

3. CUT OUT PLATES AROUND BEAM SPLICE PLATES WHERE NECESSARY.

LANDING

4. LANDING CHECKER PLATE SHALL BE INSTALLED IN TWO (2) SEPARATE PIECES; ONE (1) EACH CP3 AND ONE (1) EACH CP4.

5. PLATES WILL BE ATTACHED WITH 12mm ø BOLTS TO THE SUPPORTING MEMBERS AT A MAXIMUM SPACING IF 700mm AROUND PERIMETER BEAMS.

CHECKER PLATE DIMENSIONS:

CP1 – 2470mm x 1390mm
CP2 – 2470mm x 1080mm
CP3 – 3885mm x 895mm
CP4 – 355mm x 895mm

LEGEND:

CPX – 8mm CHECKER PLATE NUMBER
SX/XX – MEMBER MARK NUMBER

NOTES:

1. PLAN DIMENSIONS ON IPE SHAPES ARE MEASURED TO THE CENTERLINE MEMBERS. PLAN DIMENSIONS ON UPE AND L SHAPES ARE MEASURED TO THE OUTSIDE OF THE VERTICAL FACE OF THE WEB OR LEG.

600 0 600mm
SCALE: 1 = 30

UNLESS NOTED OTHERWISE, LINEAR DIMENSIONS ARE IN MILLIMETERS.

US Army Corps of Engineers
Mobile District

Symbol	No.	Description	Date	Approved
		Revisions		

Designed By:
Drawn By:
Checked By:
Reviewed By:
Date: 17 DECEMBER 2009
Contract No:
CADD CODE: M010TG17
Solicitation Number:
FILENAME:
SIZE: 559x864mm

U.S. ARMY ENGINEER DISTRICT
CORPS OF ENGINEERS
MOBILE, ALABAMA

AFGHANISTAN ENGINEER DISTRICT
20 METER WATER TOWER

PLANFORM & CATWALK FRAMING PLAN

SHEET IDENTIFICATION
S-3

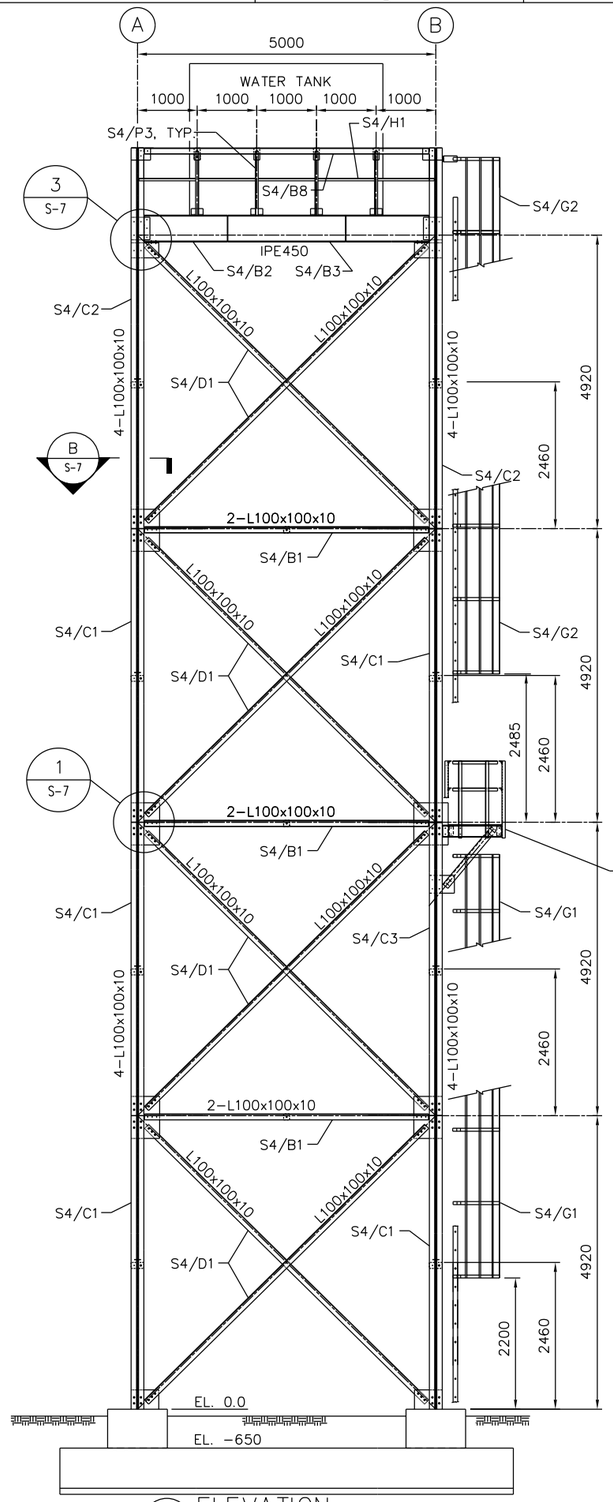

C S-2 ELEVATION
1:50

A S-2 ELEVATION (REVERSE VIEW)
1:50

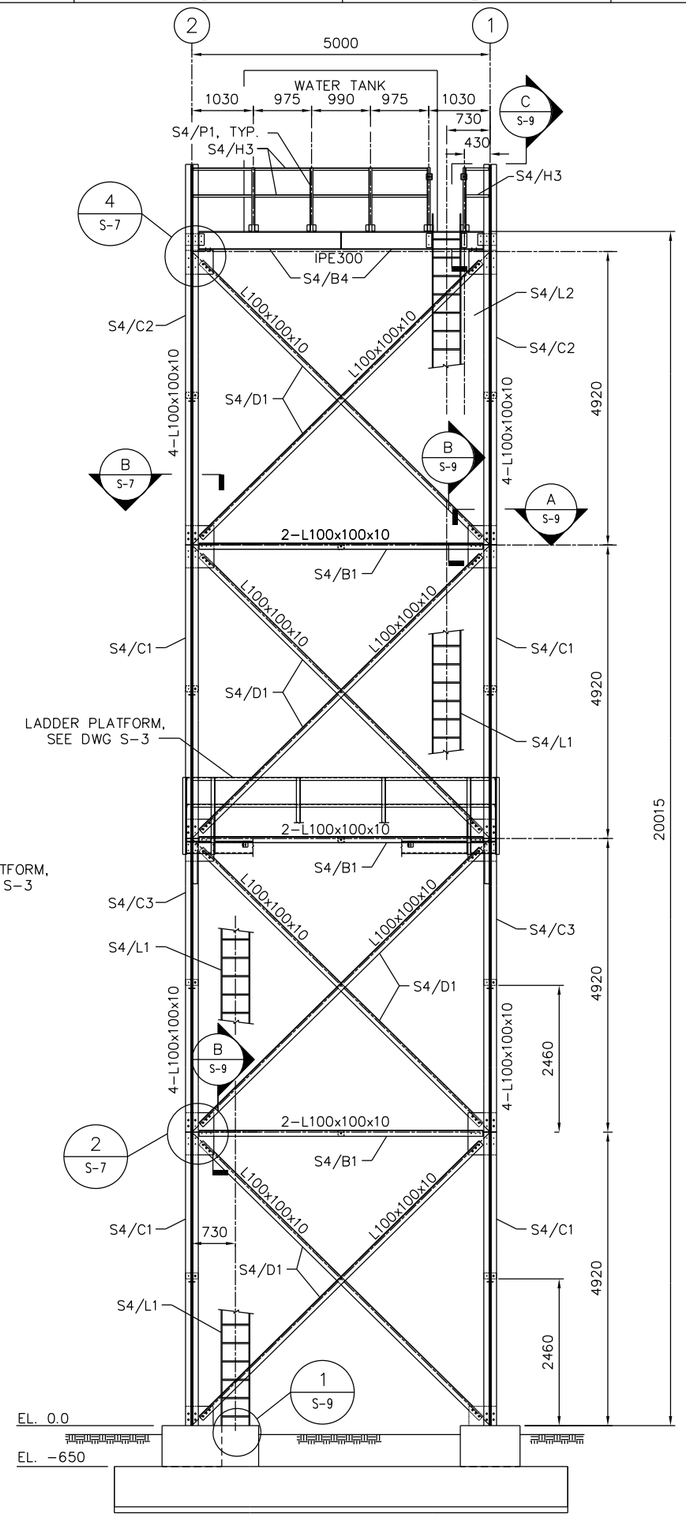

B S-2 ELEVATION
1:50

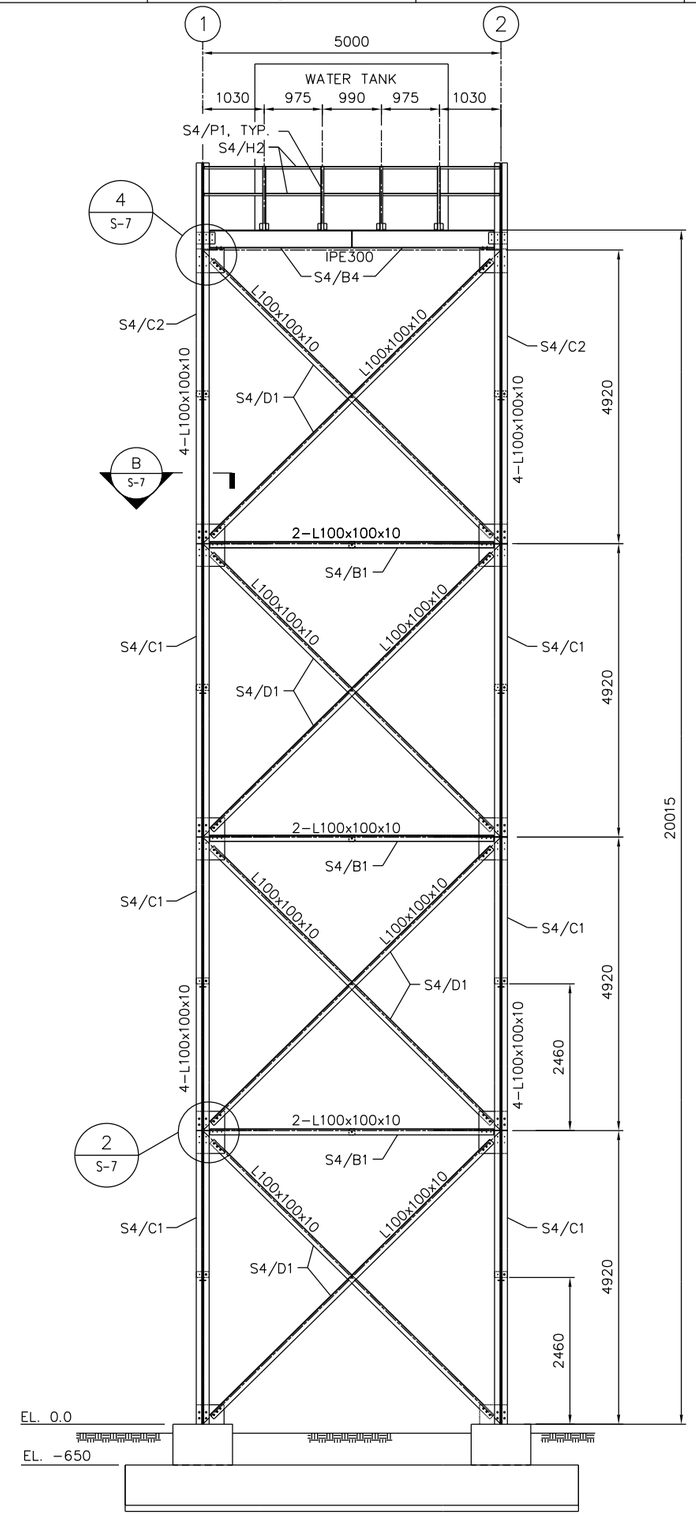

D S-2 ELEVATION
1:50

1000 0 1000mm
SCALE: 1 = 50

UNLESS NOTED OTHERWISE, LINEAR DIMENSIONS ARE IN MILLIMETERS.

US Army Corps of Engineers®
Mobile District

Symbol	No.	Description	Date	Approved
		Revisions		

Designed By:
Date: 17 DECEMBER 2009
Drawn By:
Contract No:
Checked By:
CADD CODE: M010TG17
Reviewed By:
Specification Number:
SIZE: 559x864mm
FILENAME:

U.S. ARMY ENGINEER DISTRICT
CORPS OF ENGINEERS
MOBILE, ALABAMA

AFGHANISTAN ENGINEER DISTRICT
20 METER WATER TOWER

ELEVATIONS

SHEET IDENTIFICATION
S-4

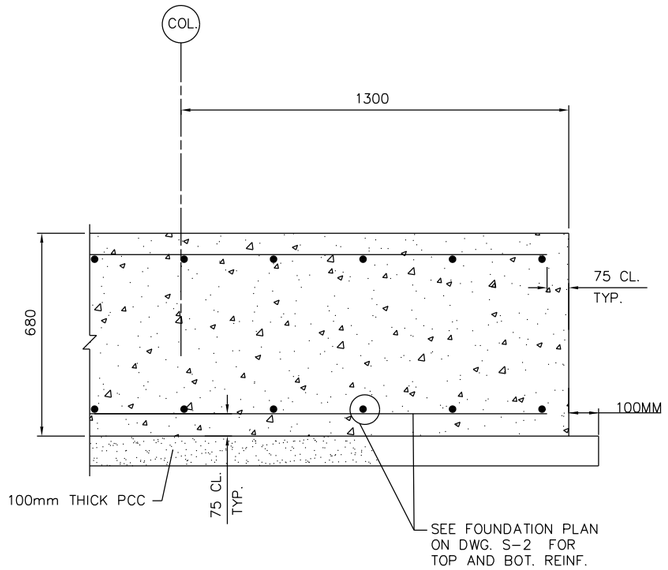

SECTION A / S-2
1:10

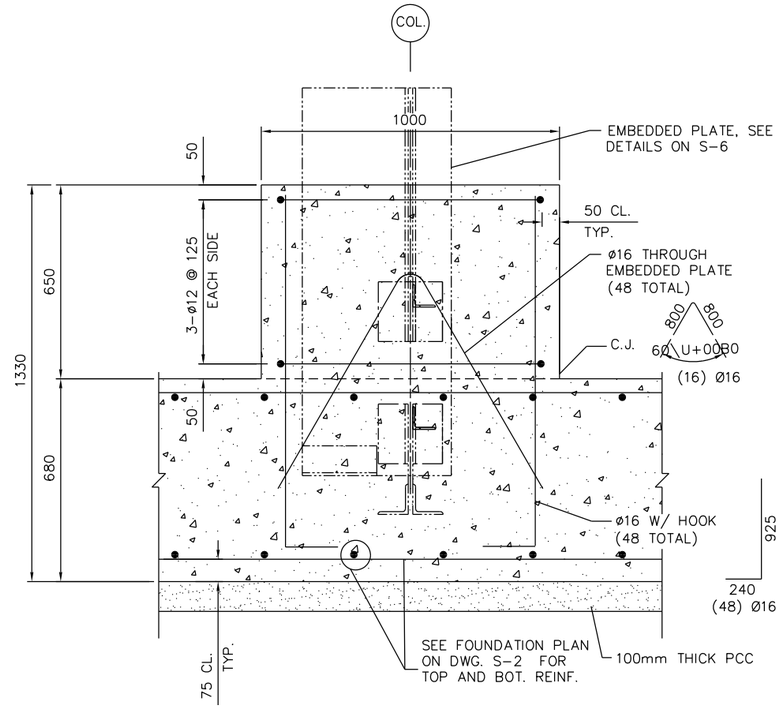

SECTION B / S-2, S-5
1:10

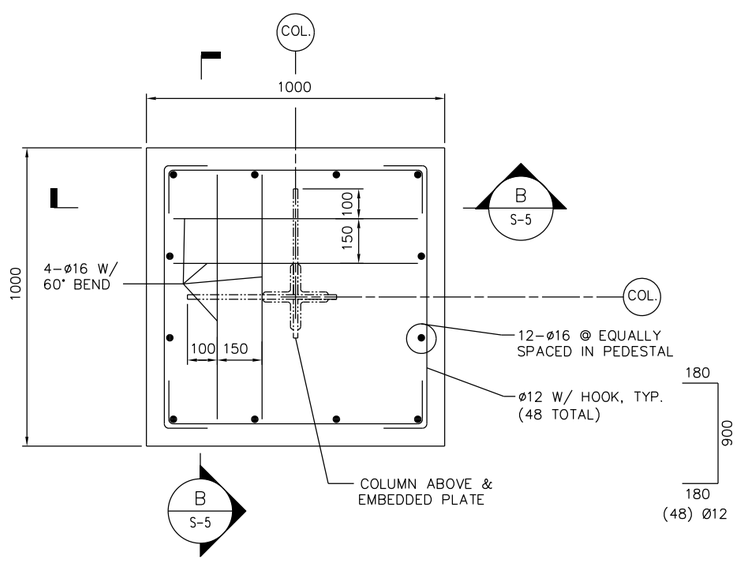

DETAIL 1 / S-2
1:10

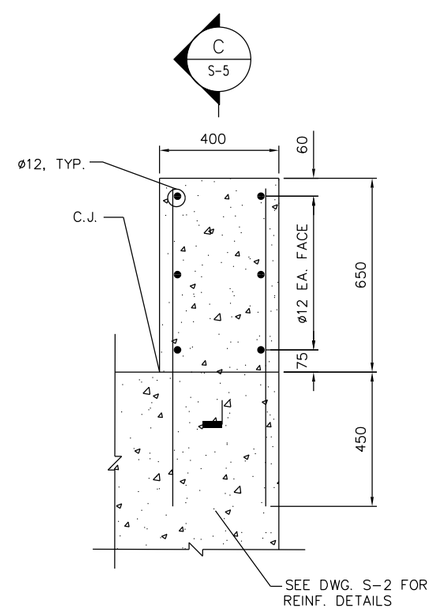

DETAIL 2 / S-2
1:10

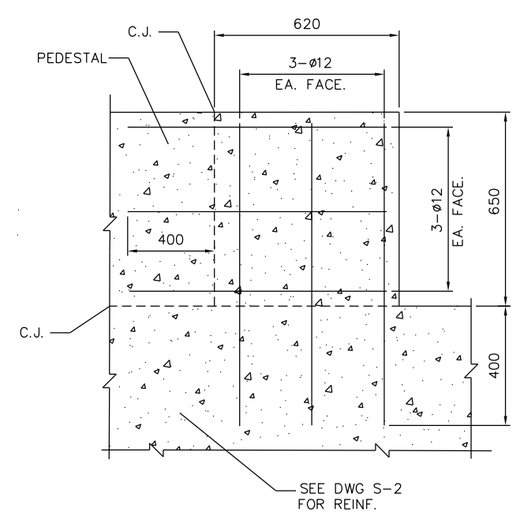

SECTION C / S-5
1:10

200 0 200mm
SCALE: 1 = 10

NOTE: SEPARATE CONCRETE PLACEMENT. SEE DETAIL 1 ON DRAWING S-9 FOR ANCHOR BOLT REQUIREMENTS.

UNLESS NOTED OTHERWISE, LINEAR DIMENSIONS ARE IN MILLIMETERS.

US Army Corps of Engineers ®
Mobile District

Symbol	No.	Description	Date	Approved
		Revisions		

Designed By:
Date: 17 DECEMBER 2009
Drawn By:
Contract No:
Checked By:
CADD CODE: MM01DG17
Reviewed By:
Solicitation Number:
SIZE: 559x864mm
FILENAME:

U.S. ARMY ENGINEER DISTRICT
CORPS OF ENGINEERS
MOBILE, ALABAMA

AFGHANISTAN ENGINEER DISTRICT
20 METER WATER TOWER

FOUNDATION SECTIONS

SHEET IDENTIFICATION
S-5

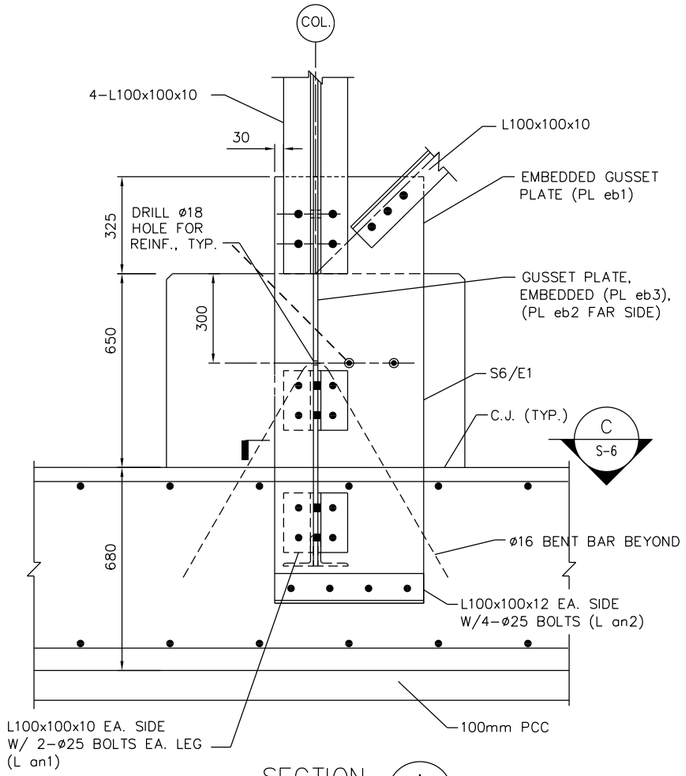

SECTION A S-2
1:10

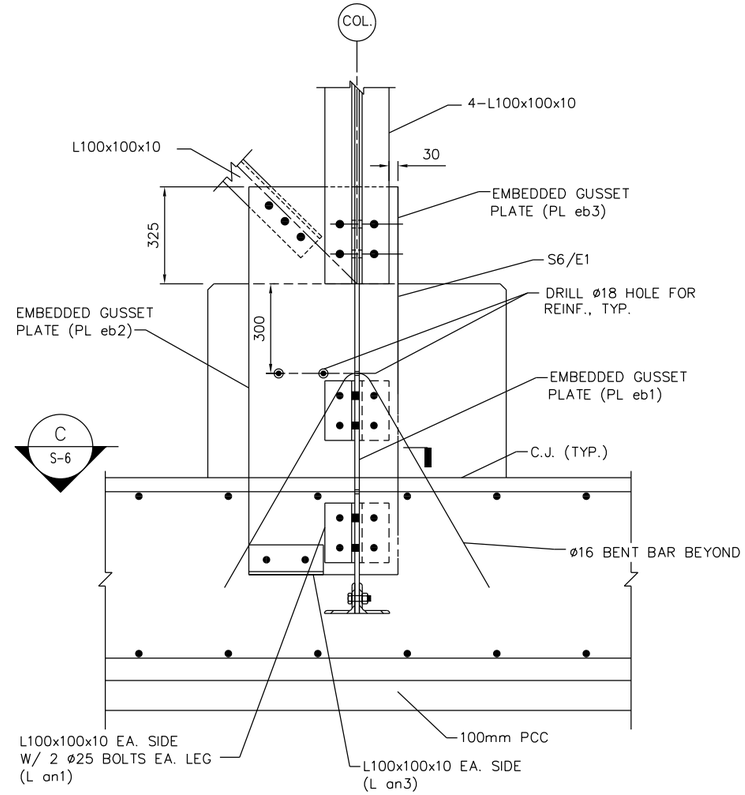

SECTION B S-2
1:10

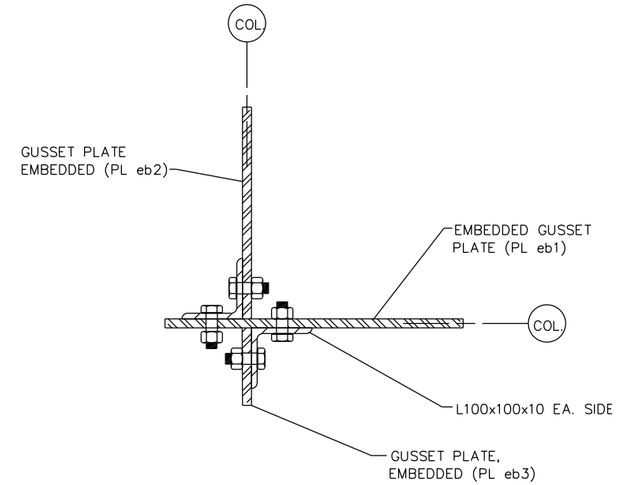

SECTION C S-6
1:5

UNLESS NOTED OTHERWISE, LINEAR DIMENSIONS ARE IN MILLIMETERS.

US Army Corps of Engineers ®
Mobile District

Symbol	No.	Description	Date	Approved
		Revisions		

Designed By:
Drawn By:
Checked By:
Reviewed By:
SIZE: 559x864mm
Date: 17 DECEMBER 2009
Contract No:
CADD CODE: MO10TG17
Specification Number:
FILENAME:

U.S. ARMY ENGINEER DISTRICT
CORPS OF ENGINEERS
MOBILE, ALABAMA

AFGHANISTAN ENGINEER DISTRICT
20 METER WATER TOWER

FOUNDATION STEEL
FRAMING SECTIONS

SHEET IDENTIFICATION
S-6

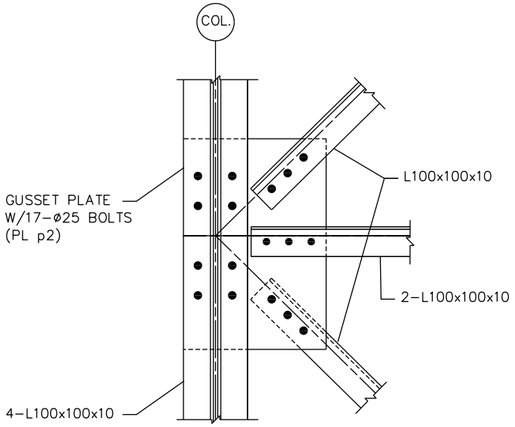

DETAIL 1 / S-4
1:10

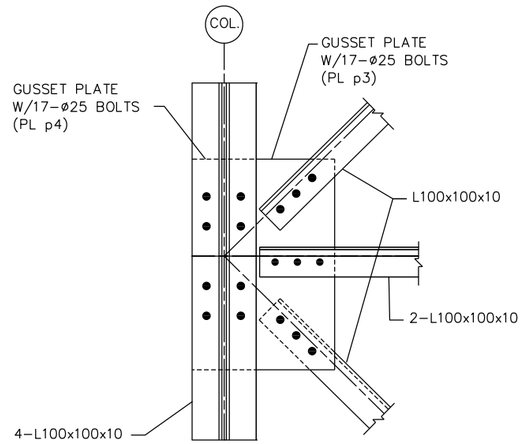

DETAIL 2 / S-4
1:10

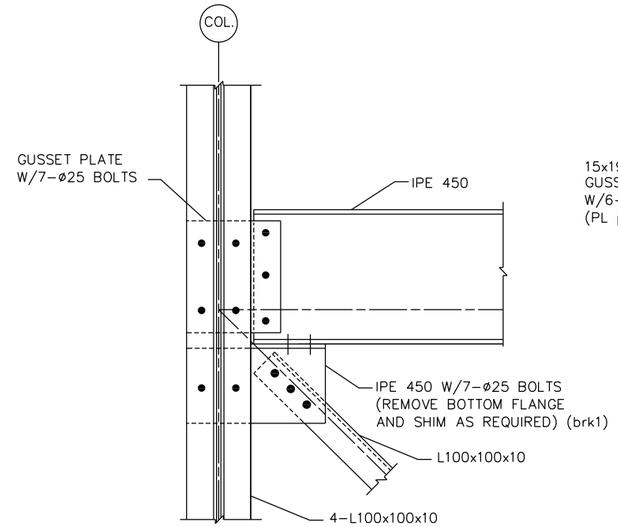

DETAIL 3 / S-4
1:10

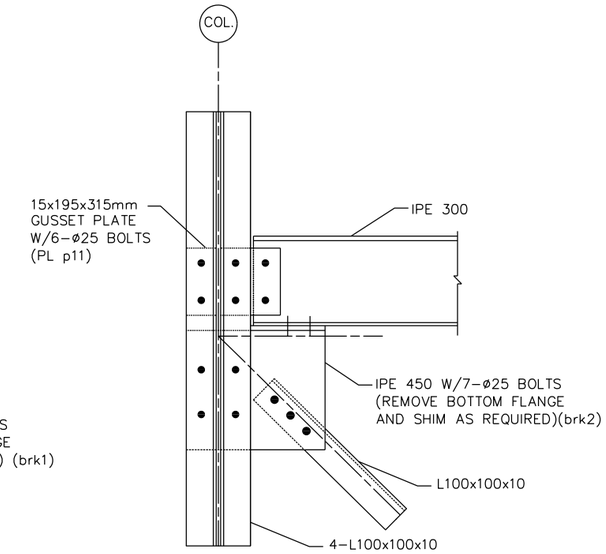

DETAIL 4 / S-4
1:10

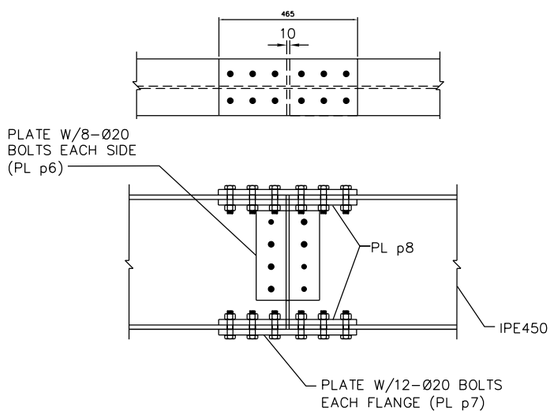

DETAIL 5 / S-3
1:10

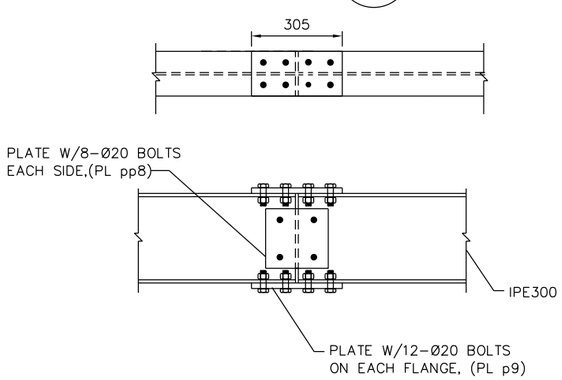

DETAIL 6 / S-3
1:10

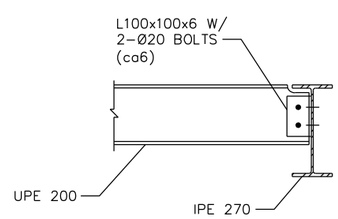

DETAIL 7 / S-3
1:10

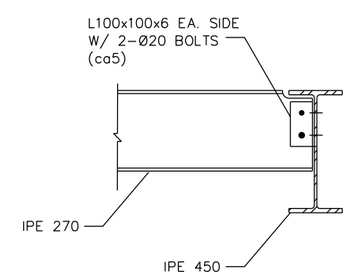

SECTION A / S-3
1:10

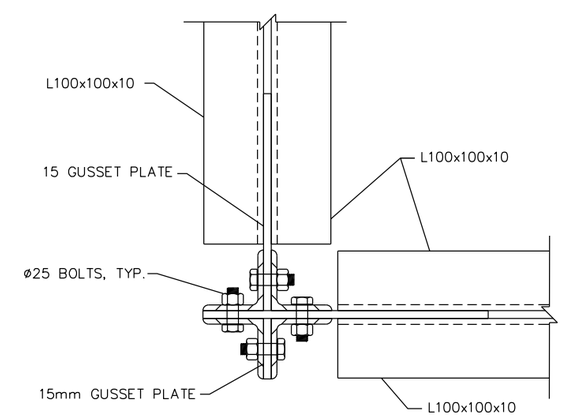

SECTION B / S-4
1:5

1000 0 1000mm
SCALE: 1 = 50

UNLESS NOTED OTHERWISE, LINEAR DIMENSIONS ARE IN MILLIMETERS.

US Army Corps of Engineers
Mobile District

Symbol	No.	Description	Date	Approved
		Revisions		

Designed By:
Date: 17 DECEMBER 2009
Drawn By:
Contract No:
Checked By:
CADD CODE: M010TC17
Reviewed By:
Solicitation Number:
SIZE: 559x864mm
FILENAME:

U.S. ARMY ENGINEER DISTRICT
CORPS OF ENGINEERS
MOBILE, ALABAMA

AFGHANISTAN ENGINEER DISTRICT
20 METER WATER TOWER

SECTIONS & DETAILS

SHEET IDENTIFICATION
S-7

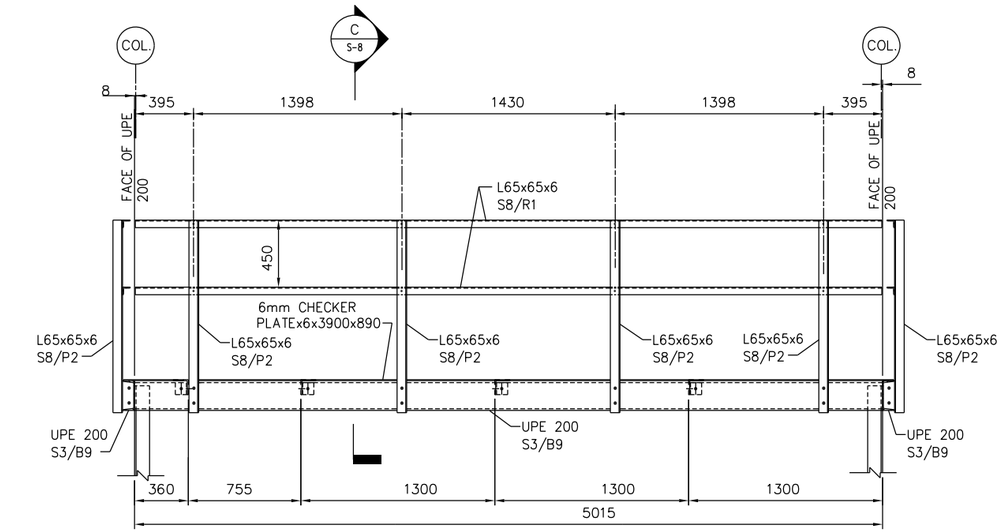

PLATFORM ELEVATION (A / S-3)
1:20

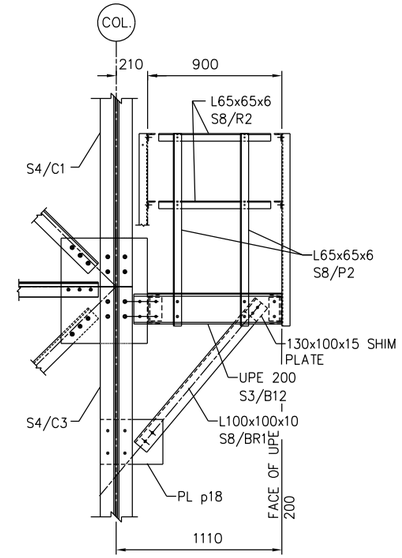

PLATFORM ELEVATION (B / S-3)
1:20

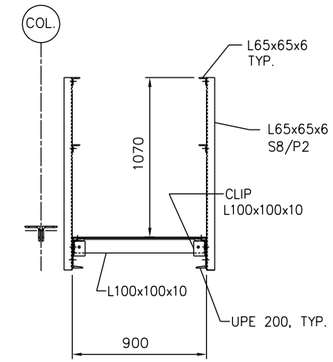

SECTION (C / S-8)
1:20

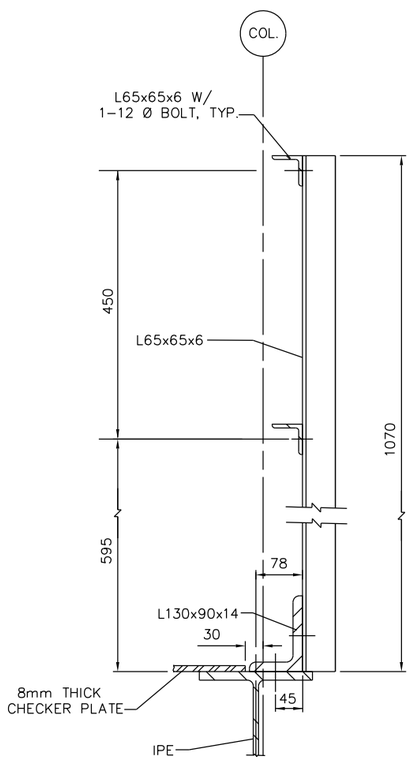

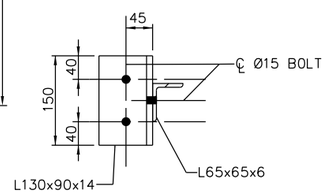

PLATFORM HANDRAIL DETAIL
1:5

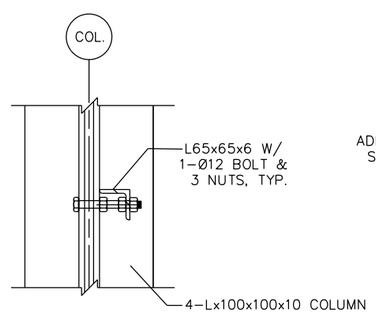

COLUMN/HANDRAIL CONNECTION DETAIL
1:5

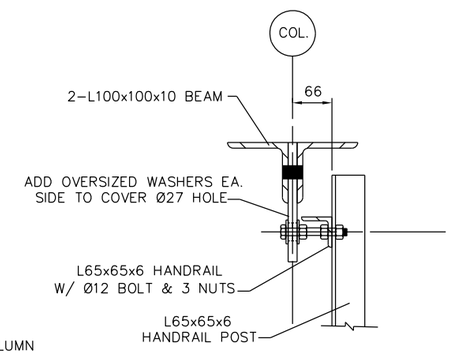

BEAM/HANDRAIL CONNECTION DETAIL
1:5

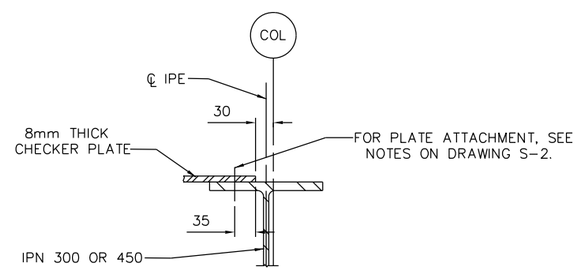

CHECKER PLATE ATTACHMENT DETAIL
1:5

100 0 100mm
SCALE: 1 = 5

UNLESS NOTED OTHERWISE, LINEAR DIMENSIONS ARE IN MILLIMETERS.

US Army Corps of Engineers
Mobile District

Symbol	No.	Description	Date	Approved
		Revisions		

Designed By:
Date: 17 DECEMBER 2009
Drawn By:
Contract No:
Checked By:
CADD CODE: MOTOT17
Reviewed By:
Solicitation Number:
SIZE: 559x864mm
FILENAME:

U.S. ARMY ENGINEER DISTRICT
CORPS OF ENGINEERS
MOBILE, ALABAMA

AFGHANISTAN ENGINEER DISTRICT
20 METER WATER TOWER

SECTIONS & DETAILS

SHEET IDENTIFICATION
S-8

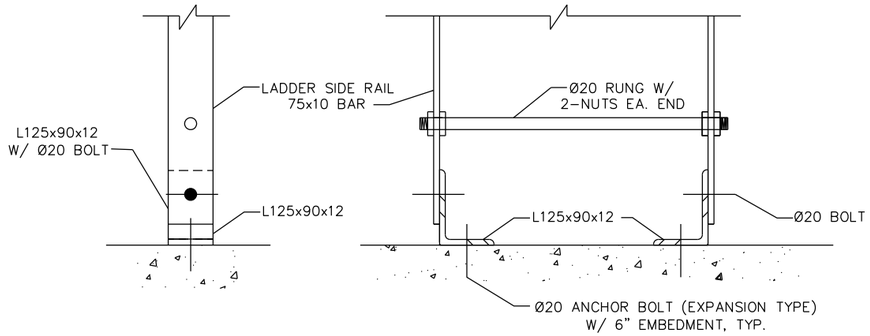

DETAIL 1/S-4
1:5

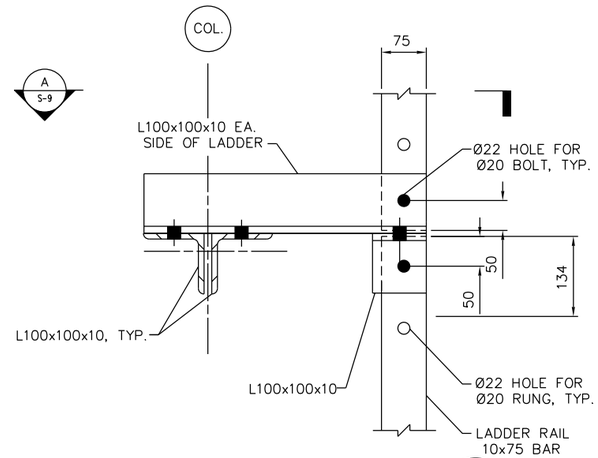

SECTION B/S-4
1:5

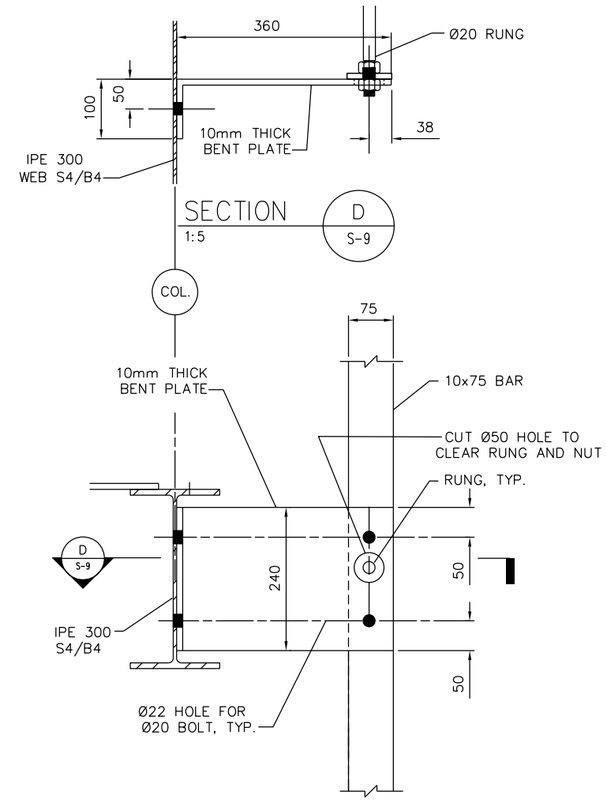

SECTION D/S-9
1:5

SECTION C/S-4
1:5

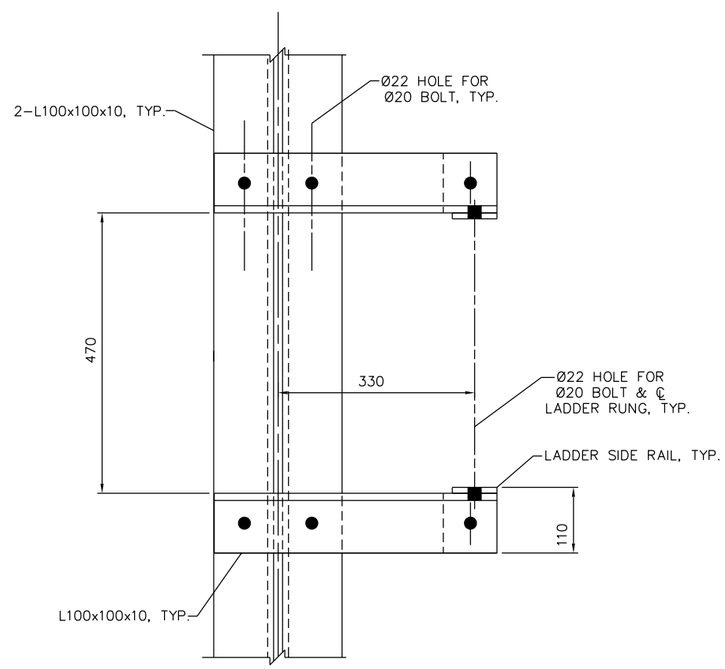

SECTION A/S-4 S-9
1:5

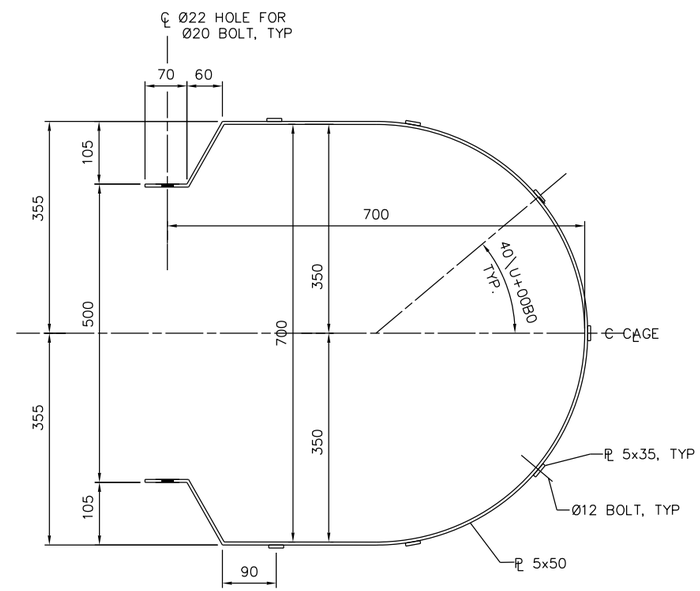

LADDER CAGE DETAIL
1:5

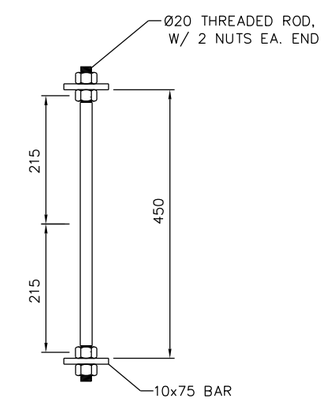

LADDER RUNG & SIDE RAIL
1:5

100 0 100mm
SCALE: 1 = 5

UNLESS NOTED OTHERWISE, LINEAR DIMENSIONS ARE IN MILLIMETERS.

US Army Corps of Engineers
Mobile District

Symbol	No.	Description	Date	Approved
		Revisions		

Designed By:
Date: 17 DECEMBER 2009
Drawn By:
Contract No:
Checked By:
CADD CODE: M010TG17
Reviewed By:
Solicitation Number:
SIZE: 559x864mm
FILENAME:

U.S. ARMY ENGINEER DISTRICT
CORPS OF ENGINEERS
MOBILE, ALABAMA

AFGHANISTAN ENGINEER DISTRICT
20 METER WATER TOWER

SECTIONS & DETAILS

SHEET IDENTIFICATION
S-9

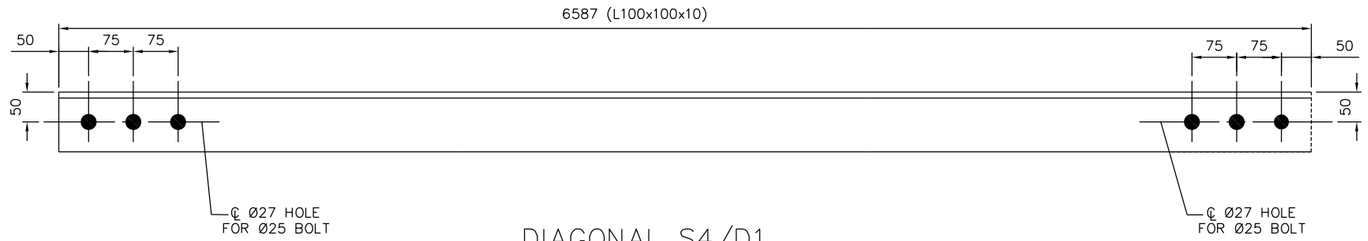

DIAGONAL S4/D1
MAKE: 32

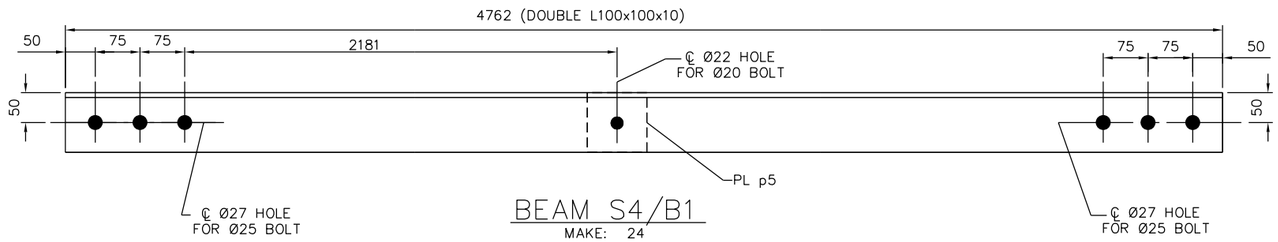

BEAM S4/B1
MAKE: 24
24-Ø20 A307 BOLTS

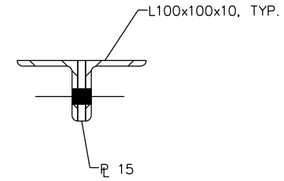

SHIP	MARK	NO. PCS	DESCRIPTION	LENGTH (mm)	FAB. MARK	NOTES
32	S4/D1		L100x100x10	6587		
24	S4/B1		2L100x100x10	4762		
		12	PL 15x100	100	PL p5	
4	S4/B2		IPE 450	1388		
		4	PL 10x215	300	PL p6	
		8	PL 20x190	465	PL p7	
		16	PL 20x80	465	PL p8	
		8	L100x100x10	200	ca5	
2	S4/B3		IPE 450	1970		
		12	L100x100x10	200	ca5	

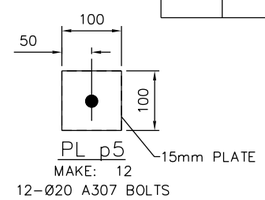

PL p5
MAKE: 12
12-Ø20 A307 BOLTS

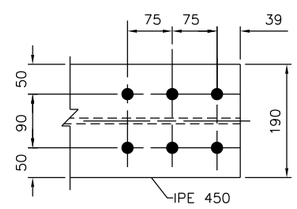

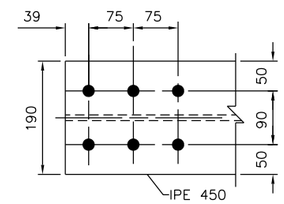

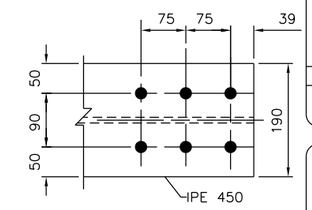

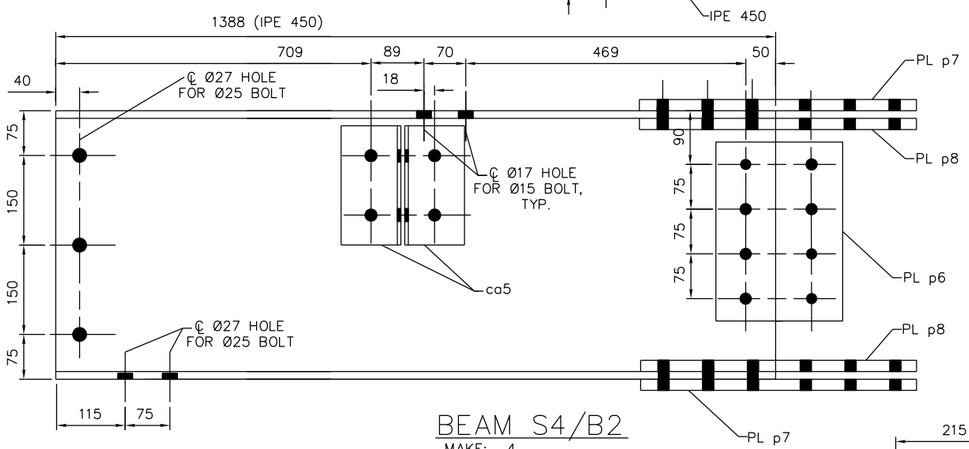

BEAM S4/B2
MAKE: 4
12-Ø25 A307 BOLTS

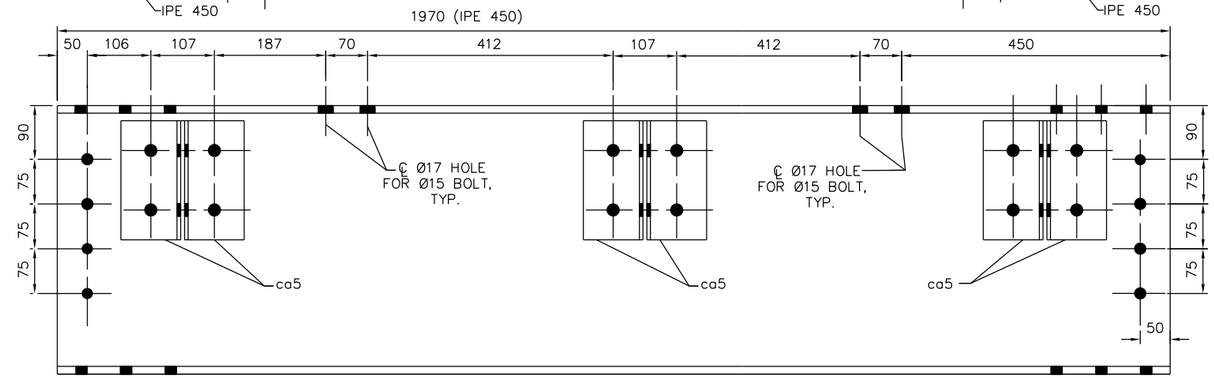

BEAM S4/B3
MAKE: 2

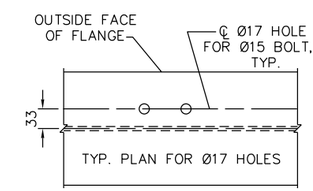

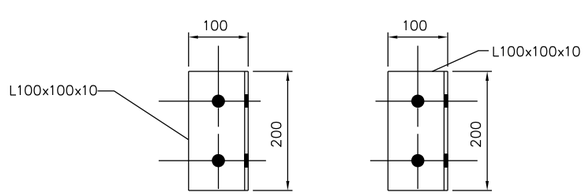

ca5
MAKE: 20
40-Ø25 A307 BOLTS

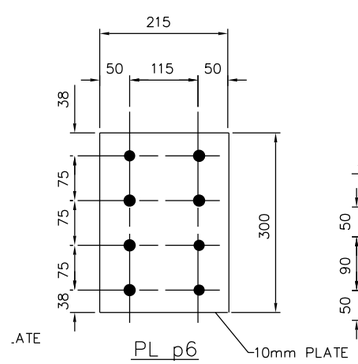

PL p6
MAKE: 8
32-Ø20 A307 BOLTS

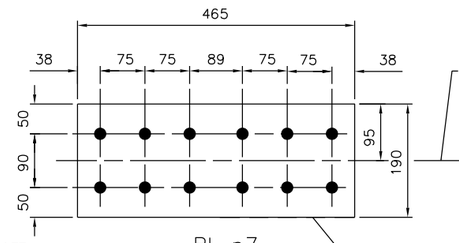

PL p7
MAKE: 8
96-Ø20 A307 BOLTS

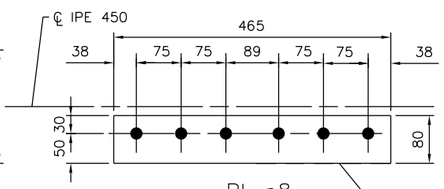

PL p8
MAKE: 16

UNLESS NOTED OTHERWISE, LINEAR DIMENSIONS ARE IN MILLIMETERS.

US Army Corps of Engineers
Mobile District

Symbol	No.	Description	Date	Approved
		Revisions		

Designed By:
Drawn By:
Checked By:
Reviewed By:
Date: 17 DECEMBER 2009
Contract No:
CADD CODE: M01DTG17
Solicitation Number:
FILENAME:
SIZE: 559x864mm

U.S. ARMY ENGINEER DISTRICT
CORPS OF ENGINEERS
MOBILE, ALABAMA

AFGHANISTAN ENGINEER DISTRICT
20 METER WATER TOWER

MEMBER DETAILS

SHEET IDENTIFICATION
S-10

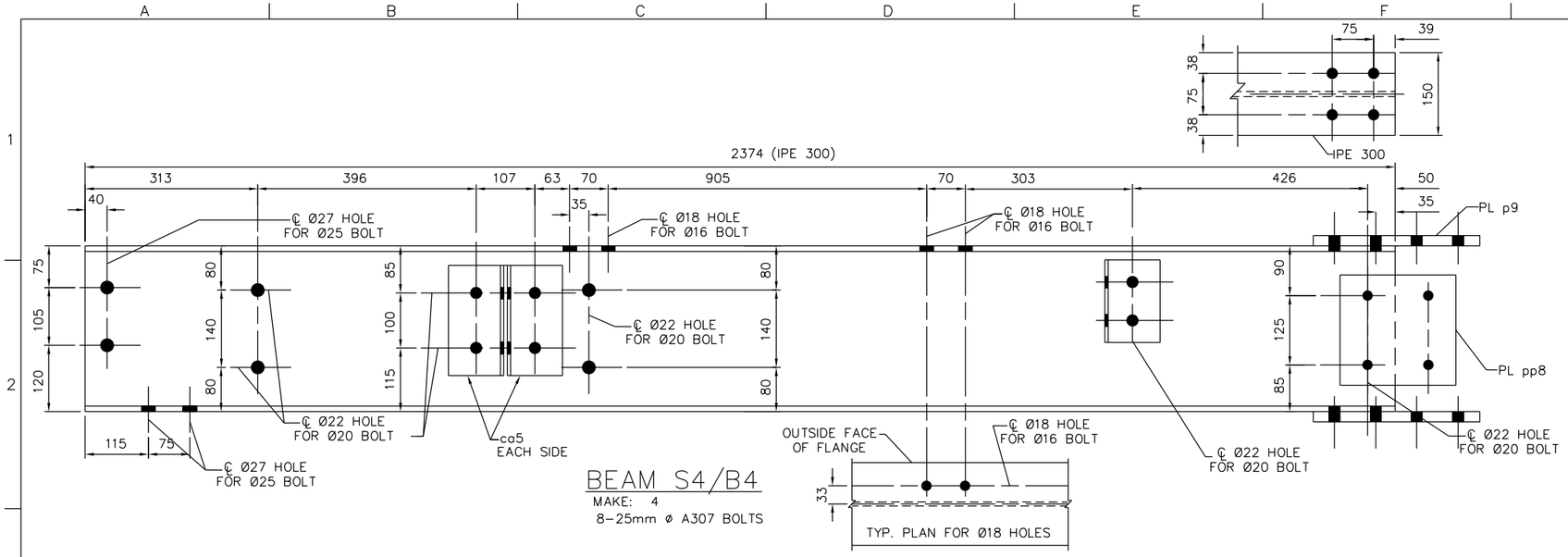

BEAM S4/B4
MAKE: 4
8-25mm ø A307 BOLTS

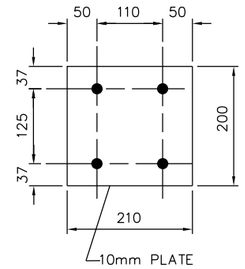

PL pp8
MAKE: 4
16-Ø20 A307 BOLTS

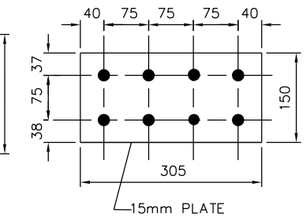

PL p9
MAKE: 4
24-Ø20 A307 BOLTS

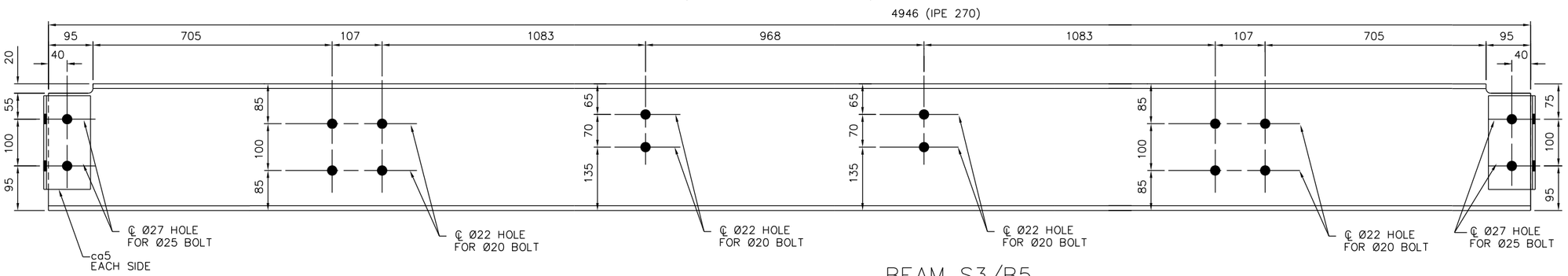

BEAM S3/B5
MAKE: 5
80-Ø25 A307 BOLTS

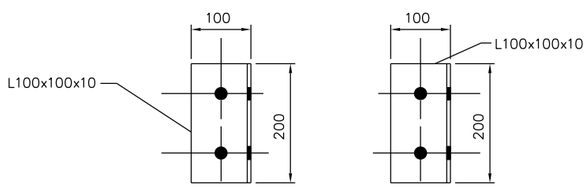

ca5
MAKE: 68

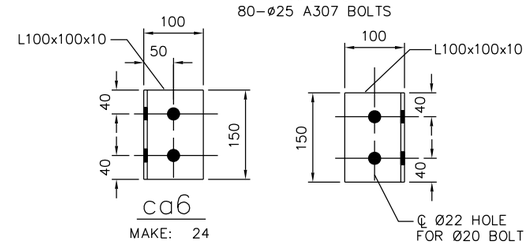

ca6
MAKE: 24

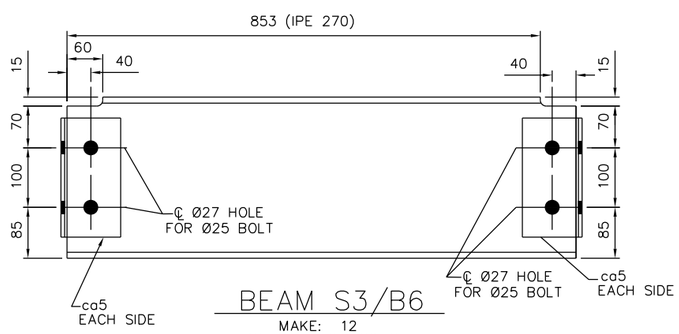

BEAM S3/B6
MAKE: 12
48-Ø25 A307 BOLTS

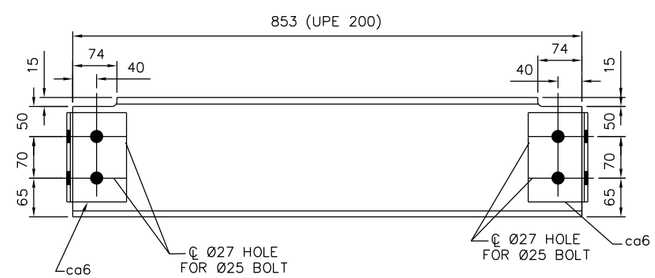

BEAM S3/B7
MAKE: 12
48-Ø25 A307 BOLTS

SHIP	MARK	NO. PCS	DESCRIPTION	LENGTH (mm)	FAB. MARK	NOTES
4	S4/B4		IPE 300	2367		
		4	PL 210x10	200	PL pp8	
		4	PL 150x15	305	PL p9	
5	S3/B5		IPE 270	4947		
		20	L100x100x10	200	ca5	
12	S3/B6		IPE 270	853		
		48	L100x100x10	200	ca5	
12	S3/B7		UPE 200	853		
		24	L100x100x10	150	ca6	

UNLESS NOTED OTHERWISE, LINEAR DIMENSIONS ARE IN MILLIMETERS.

US Army Corps of Engineers
Mobile District

Symbol	No.	Description	Date	Approved
		Revisions		

Designed By:
Drawn By:
Checked By:
Reviewed By:
Date: 17 DECEMBER 2009
Contract No:
CADD CODE: MD10T017
Specification Number:
FILENAME:
SIZE: 559x864mm

U.S. ARMY ENGINEER DISTRICT
CORPS OF ENGINEERS
MOBILE, ALABAMA

AFGHANISTAN ENGINEER DISTRICT
20 METER WATER TOWER

MEMBER DETAILS

SHEET IDENTIFICATION
S-11

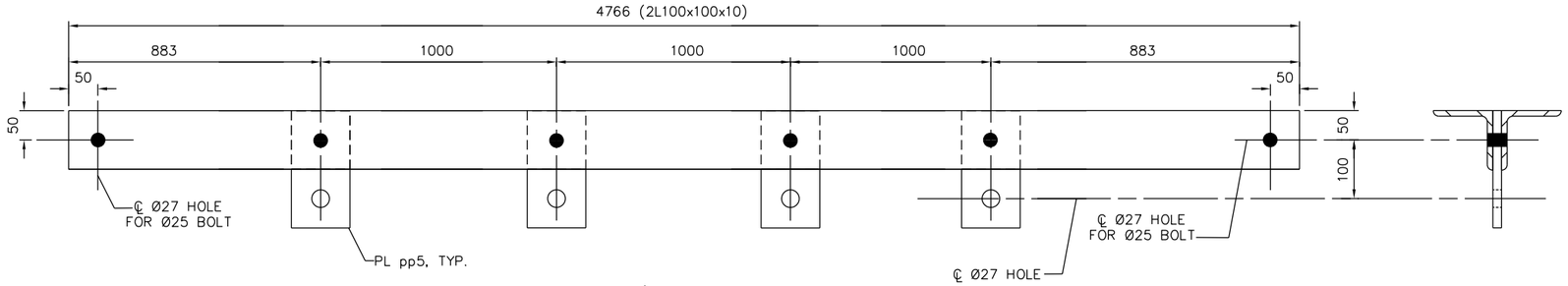

BEAM S4/B8

MAKE: 2
4-ø25 A307 BOLTS

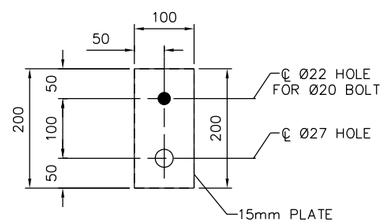

PL pp5

MAKE: 8
8-ø20 A307 BOLTS

SHIP	MARK	NO. PCS	DESCRIPTION	LENGTH (mm)	FAB. MARK	NOTES
4	S4/B8		2L100x100x10	4766		
		4	ℙ 15x100	200	PL pp5	

UNLESS NOTED OTHERWISE, LINEAR DIMENSIONS ARE IN MILLIMETERS.

US Army Corps of Engineers ®
Mobile District

Symbol	No.	Description	Date	Approved
		Revisions		

Designed By:
Date: 17 DECEMBER 2009
Drawn By:
Contract No:
Checked By:
CADD CODE: M010TG17
Reviewed By:
Solicitation Number:
SIZE: 559x864mm
FILENAME:

U.S. ARMY ENGINEER DISTRICT
CORPS OF ENGINEERS
MOBILE, ALABAMA

AFGHANISTAN ENGINEER DISTRICT
20 METER WATER TOWER

MEMBER DETAILS

SHEET IDENTIFICATION

S-12

SHIP	MARK	NO. PCS	DESCRIPTION	LENGTH (mm)	FAB. MARK	WEIGHT	NOTES
10	S4/C1		4–L100x100x10	4920			
		40	L100x100x10	4920	L am1		
		20	PL 100x15	215	PL p1		
		10	PL 480x15	705	PL p2		
		10	PL 100x15	705	PL p3		
		10	PL 365x15	705	PL p4		
		4	PL 100X15	515	PL pp1		
		4	PL 100X15	515	PL pp2		

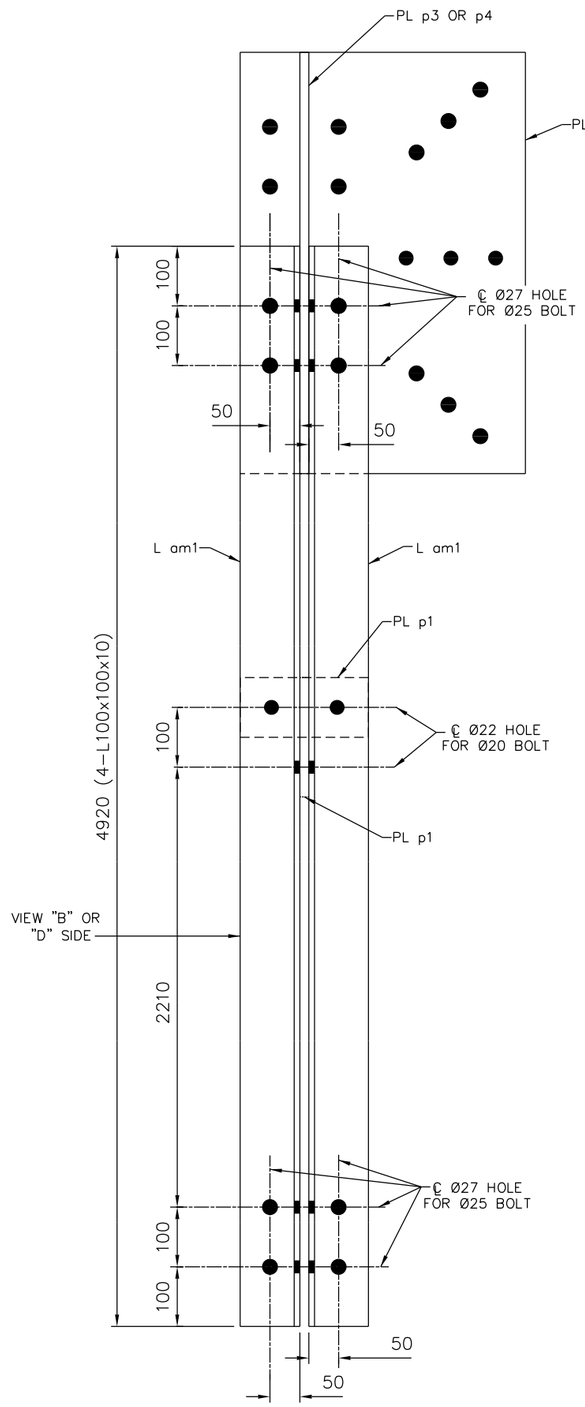

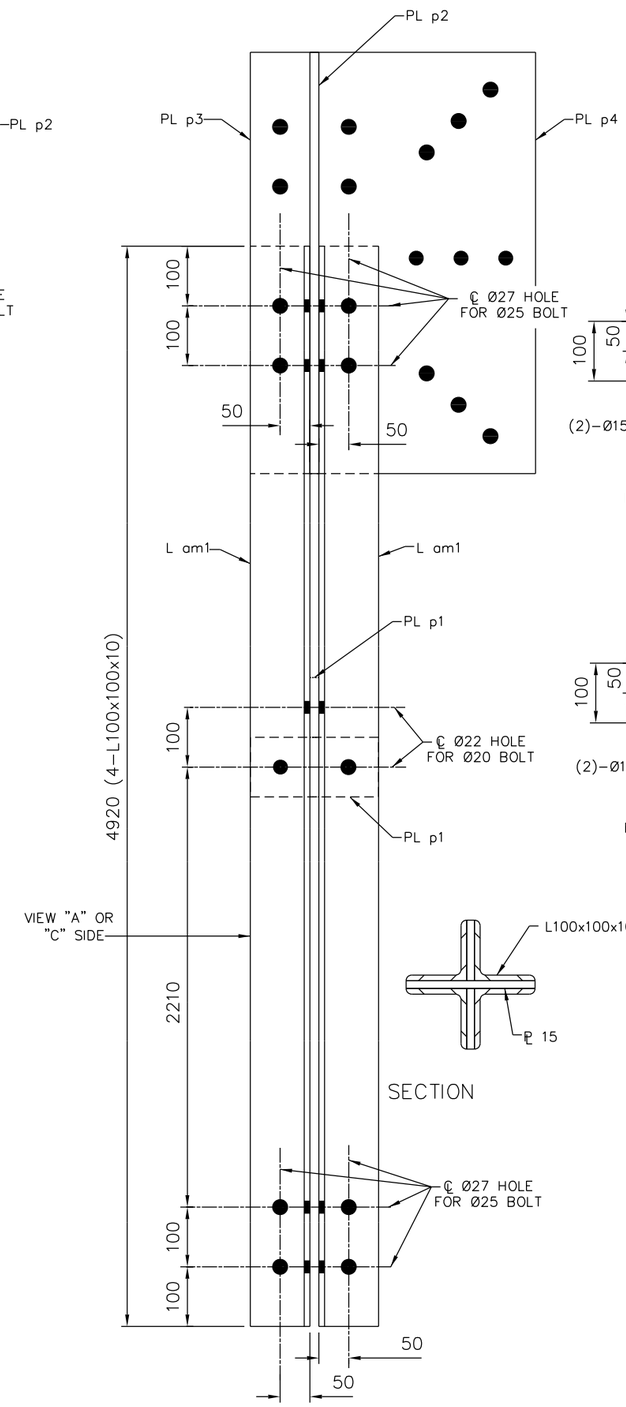

SECTION

COLUMN S4/C1
MAKE: 10

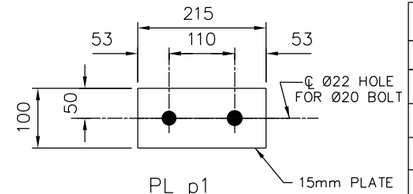

PL p1
MAKE: 20
40–Ø20 A307 BOLTS

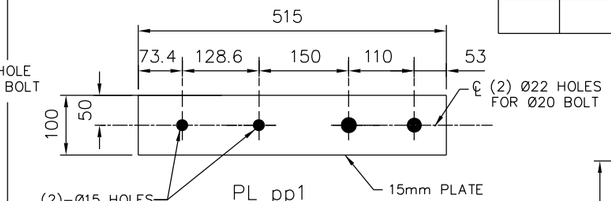

PL pp1
MAKE: 4
16–Ø20 A307 BOLTS

NOTE: PLUMBING PIPE SUPPORT (PL pp1) MAY BE INTERCHANGED WITH PL p1 TO ATTACH PLUMBING.

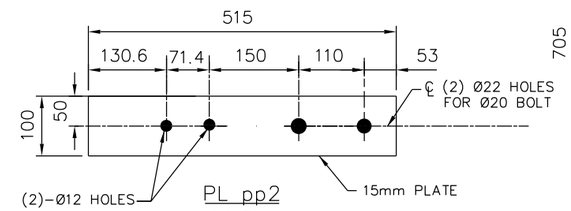

PL pp2
MAKE: 4
16–Ø20 A307 BOLTS

NOTE: PLUMBING PIPE SUPPORT (PL pp2) MAY BE INTERCHANGED WITH PL p1 TO ATTACH PLUMBING.

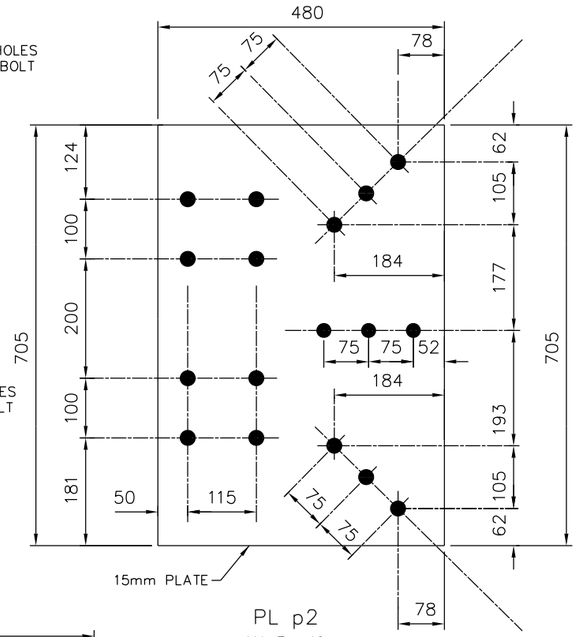

PL p2
MAKE: 10
170–Ø25 A307 BOLTS

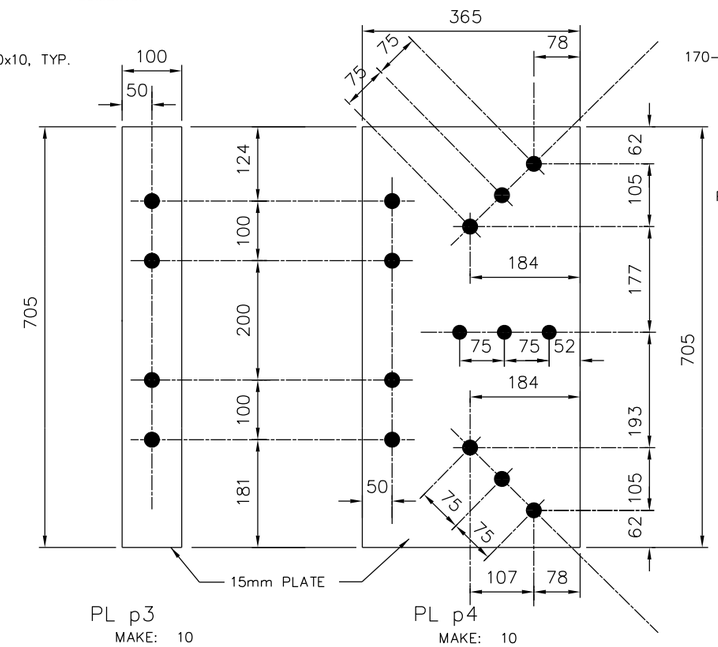

PL p3
MAKE: 10
40–Ø25 A307 BOLTS

PL p4
MAKE: 10
130–Ø25 A307 BOLTS

NOTE: BOLT HOLES IN PL p2, p3, & p4 ARE Ø27

UNLESS NOTED OTHERWISE, LINEAR DIMENSIONS ARE IN MILLIMETERS.

US Army Corps of Engineers
Mobile District

Symbol	No.	Description	Date	Approved
		Revisions		

Designed By:
Drawn By:
Checked By:
Reviewed By:
Date: 17 DECEMBER 2009
Contract No:
CADD CODE: M010TG17
Specification Number:
FILENAME:
SIZE: 559x864mm

U.S. ARMY ENGINEER DISTRICT
CORPS OF ENGINEERS
MOBILE, ALABAMA

AFGHANISTAN ENGINEER DISTRICT
20 METER WATER TOWER

MEMBER DETAILS

SHEET IDENTIFICATION
S–13

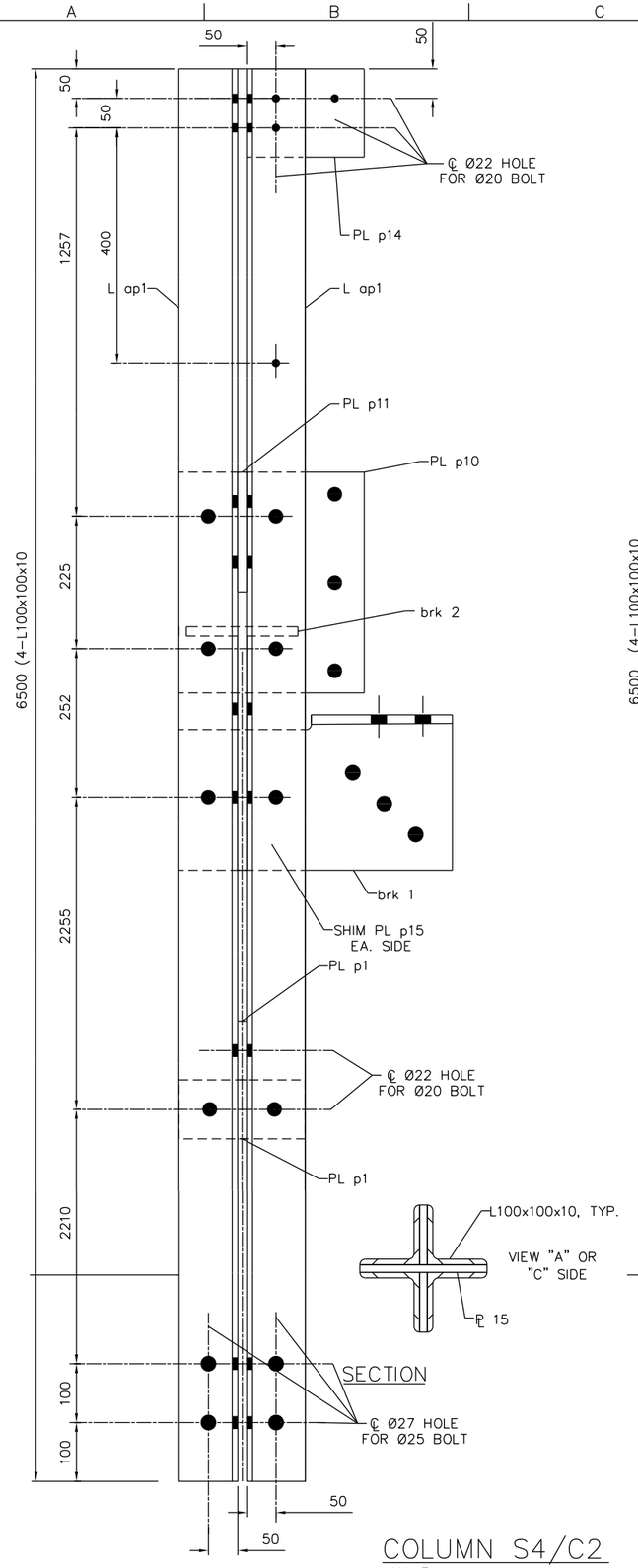

COLUMN S4/C2
MAKE: 4

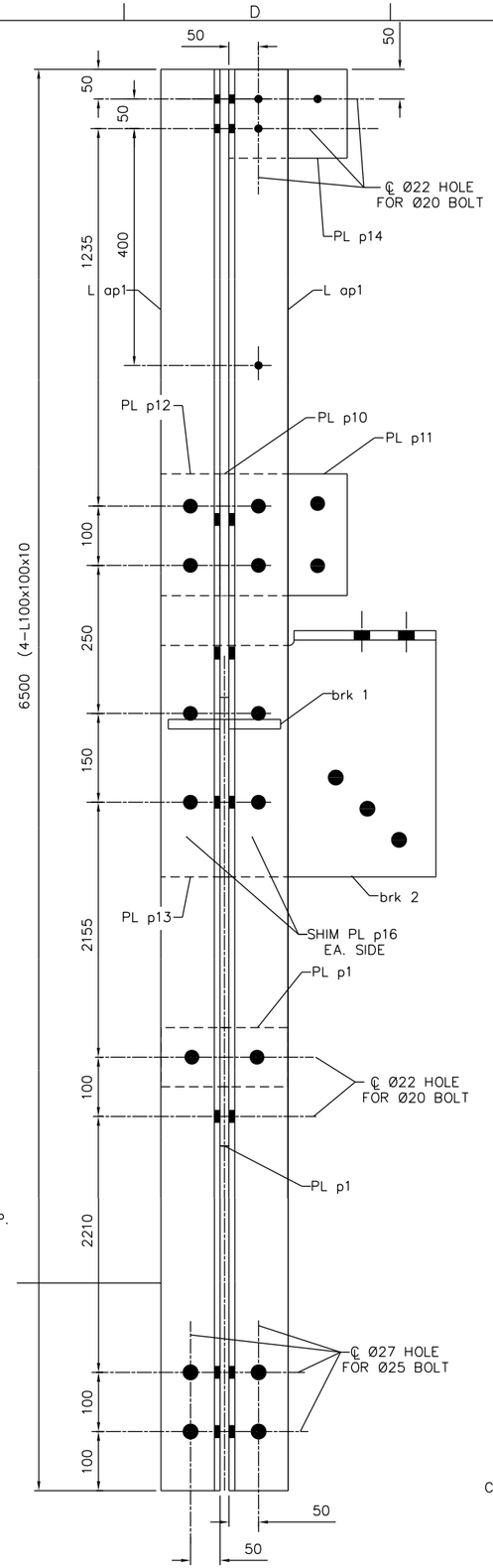

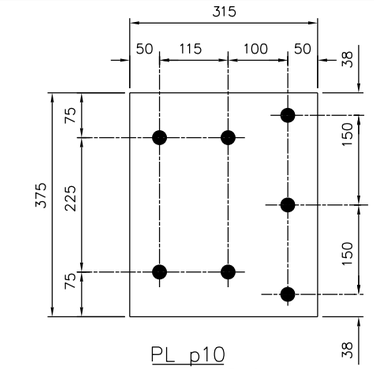

PL p10
MAKE: 4
28-ø25 A307 BOLTS

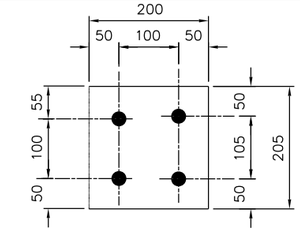

PL p11
MAKE: 4
16-ø25 A307 BOLTS

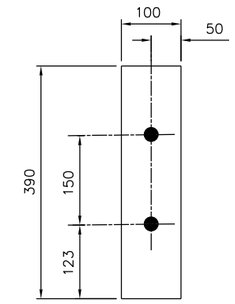

PL p13
MAKE: 4
8-ø25 A307 BOLTS

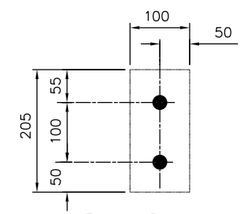

PL p12
MAKE: 4
8-ø25 A307 BOLTS

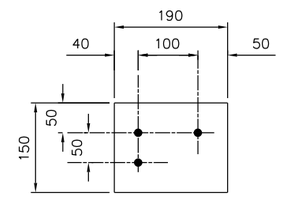

PL p14
MAKE: 8
12-ø20 A307 BOLTS

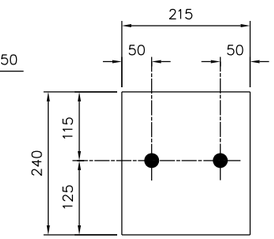

SHIM PL p15
MAKE: 8
2mm SHIM PLATES

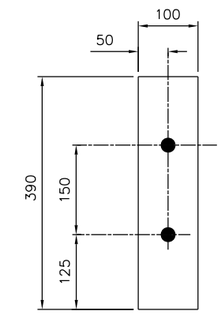

SHIM PL p16
MAKE: 16
2mm SHIM PLATES

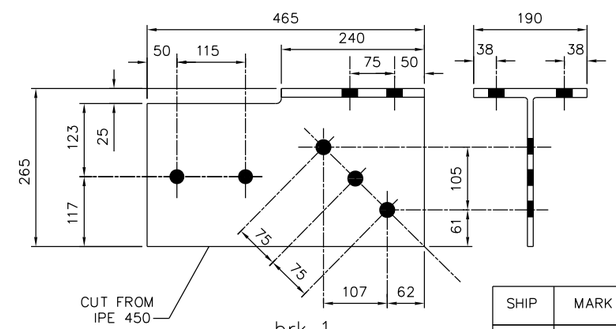

brk 1
MAKE: 4
28-ø25 A307 BOLTS

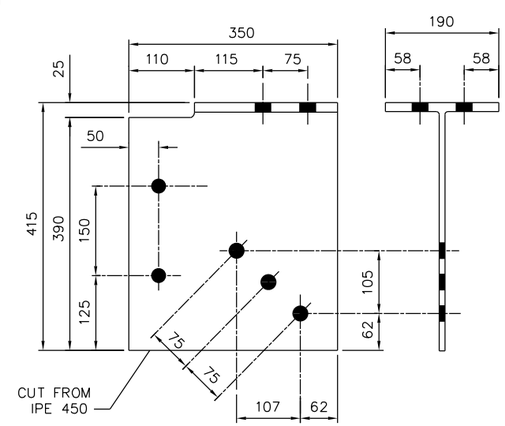

brk 2
MAKE: 4
28-ø25 A307 BOLTS

SHIP	MARK	NO. PCS	DESCRIPTION	LENGTH (mm)	FAB. MARK	NOTES
4	S4/C2		4-L100x100x10	6500		
		16	L100x100x10	6500	L ap1	
		4	ℙ 315x15	375	PL p10	
		4	ℙ 200x15	205	PL p11	
		4	ℙ 100x15	205	PL p12	
		4	ℙ 100x15	390	PL p13	
		8	ℙ 150x15	190	PL p14	
		8	ℙ 215x2	240	SHIM PL p15	
		16	ℙ 100x2	390	SHIM PL p16	
		4	ℙ 265x15	465	brk 1	
		4	ℙ 350x15	415	brk 2	

UNLESS NOTED OTHERWISE, LINEAR DIMENSIONS ARE IN MILLIMETERS.

US Army Corps of Engineers ®
Mobile District

Symbol	No.	Description	Date	Approved
		Revisions		

Designed By:
Date: 17 DECEMBER 2009
Drawn By:
Contract No:
Checked By:
CADD CODE: MOT0T017
Reviewed By:
Solicitation Number:
SIZE: 559x864mm
FILENAME:

U.S. ARMY ENGINEER DISTRICT
CORPS OF ENGINEERS
MOBILE, ALABAMA

AFGHANISTAN ENGINEER DISTRICT
20 METER WATER TOWER

MEMBER DETAILS

SHEET IDENTIFICATION
S-14

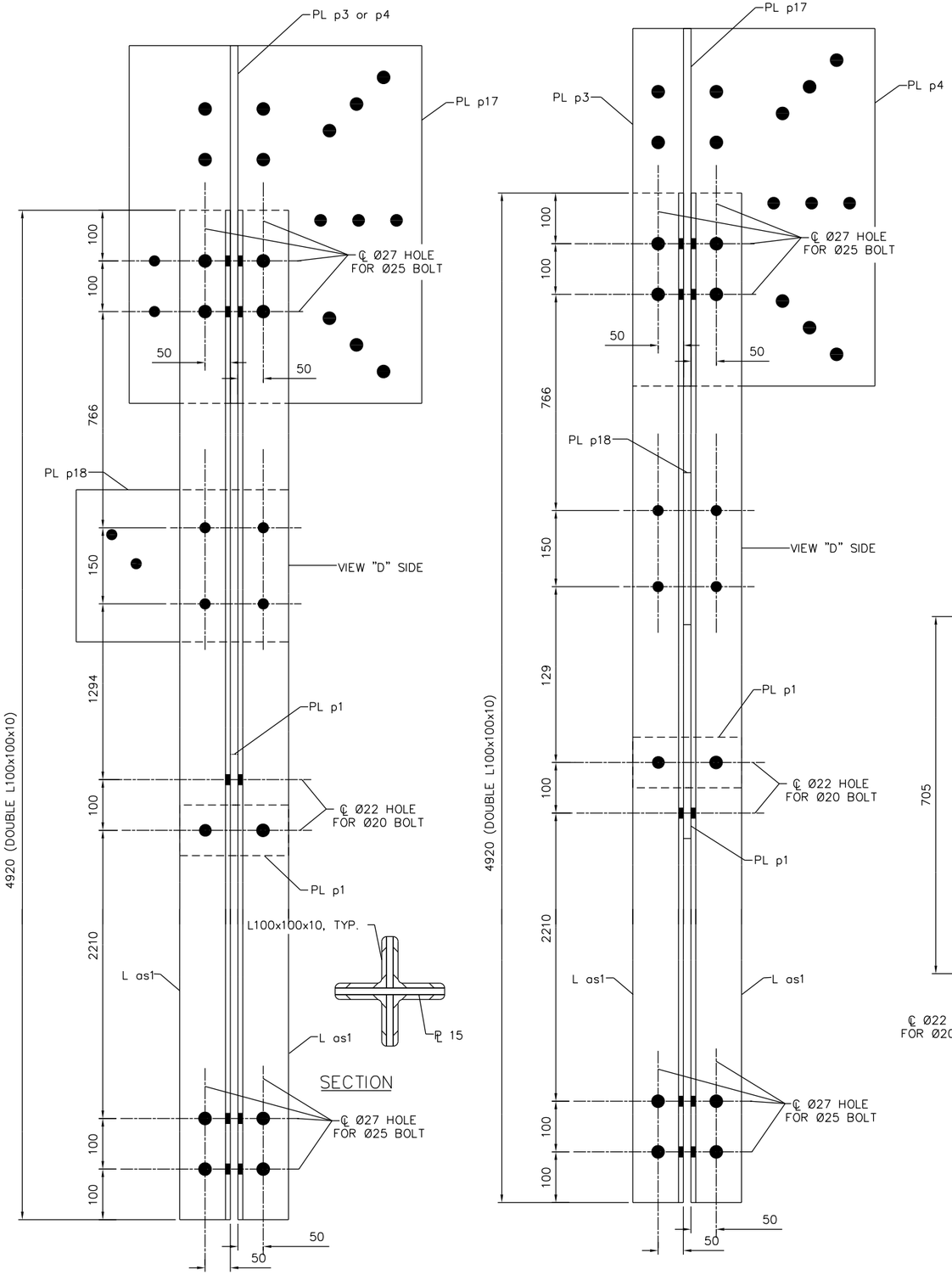

COLUMN S4/C3

MAKE: 2

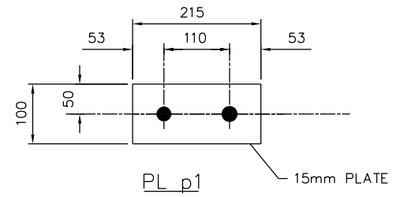

PL p1

MAKE: 4

64–ø20 A307 BOLTS

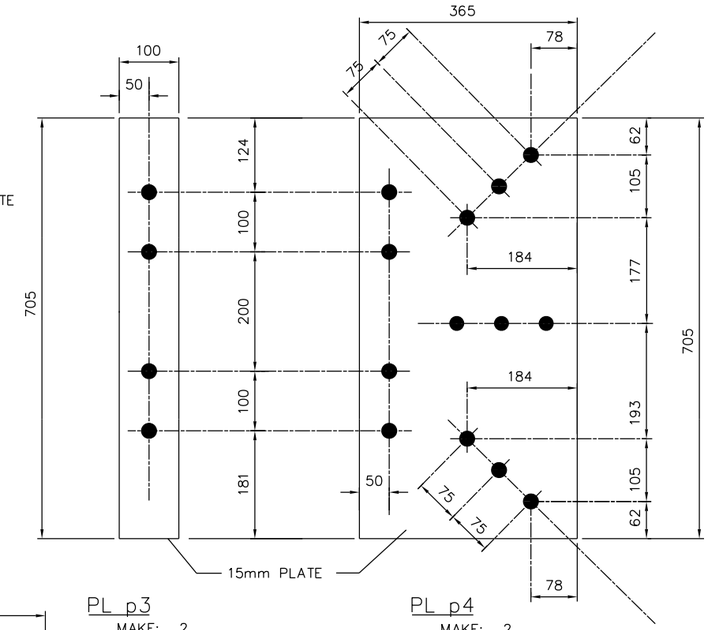

PL p3

MAKE: 2

8–ø25 A307 BOLTS

PL p4

MAKE: 2

26–ø25 A307 BOLTS

TE: HOLES IN PL p3, p4, , & p18 ARE Ø27 UNLESS SHOWN OTHERWISE.

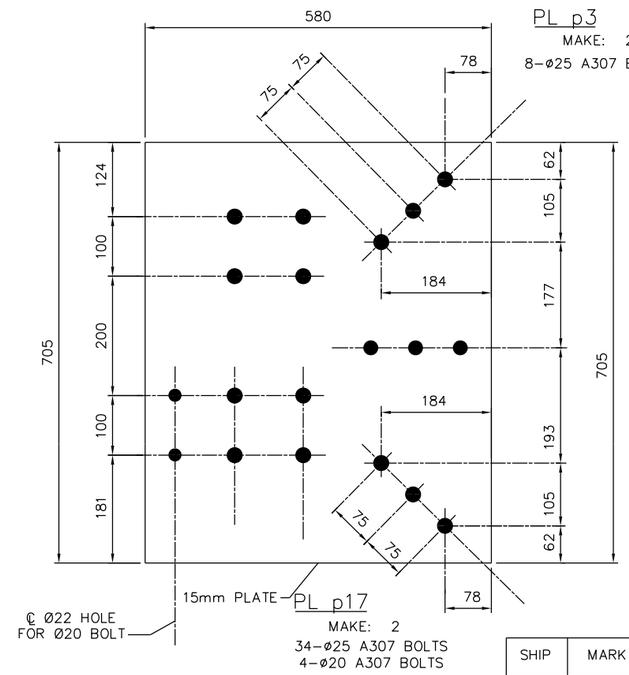

PL p17

MAKE: 2

34–ø25 A307 BOLTS

4–ø20 A307 BOLTS

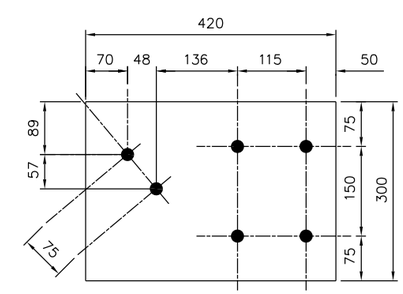

PL p18

MAKE: 2

12–ø25 A307 BOLTS

SHIP	MARK	NO. PCS	DESCRIPTION	LENGTH (mm)	FAB. MARK	WEIGHT	NOTES
2	S4/C3		4–L100x100x10	4920			
		8	4–L100x100x10	4920	L as1		
		4	℞ 100x15	215	PL p1		
		2	℞ 100x15	705	PL p3		
		2	℞ 100x15	705	PL p4		
		2	℞ 580x15	705	PL p17		
		2	℞ 300x15	420	PL p18		

UNLESS NOTED OTHERWISE, LINEAR DIMENSIONS ARE IN MILLIMETERS.

US Army Corps of Engineers ®
Mobile District

Symbol	No.	Description	Date	Approved
		Revisions		

Designed By:
Date: 17 DECEMBER 2009
Drawn By:
Contract No:
Checked By:
CADD CODE: M010TC17
Reviewed By:
Solicitation Number:
SIZE: 559x864mm
FILENAME:

U.S. ARMY ENGINEER DISTRICT
CORPS OF ENGINEERS
MOBILE, ALABAMA

AFGHANISTAN ENGINEER DISTRICT
20 METER WATER TOWER

MEMBER DETAILS

SHEET IDENTIFICATION

S–15

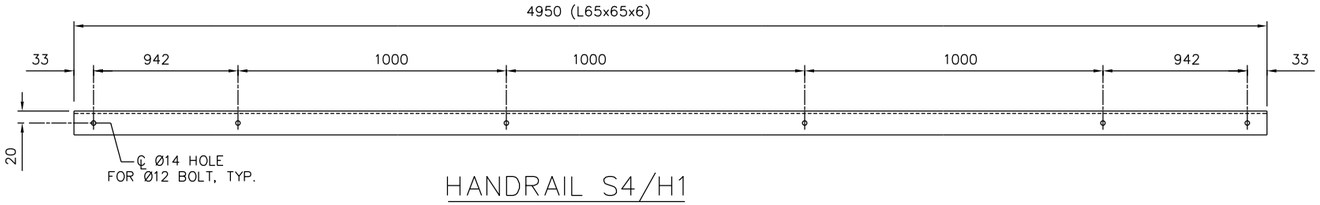

HANDRAIL S4/H1

MAKE: 2
24–Ø12 A307 BOLTS

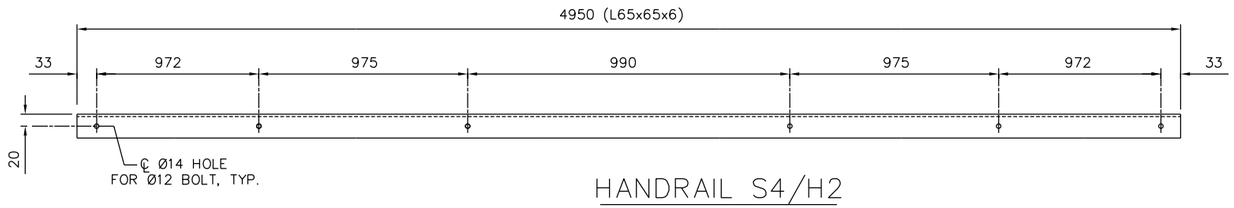

HANDRAIL S4/H2

MAKE: 2
20–Ø12 A307 BOLTS

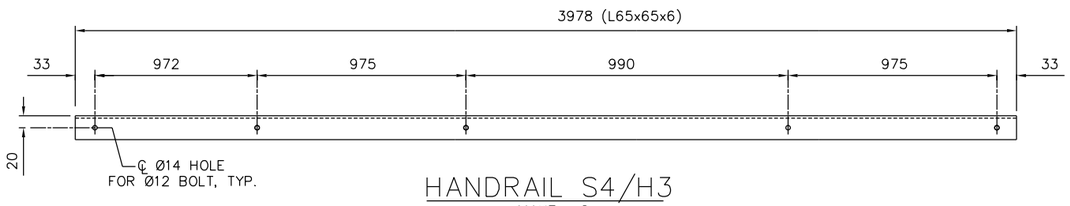

HANDRAIL S4/H3

MAKE: 2
10–Ø12 A307 BOLTS

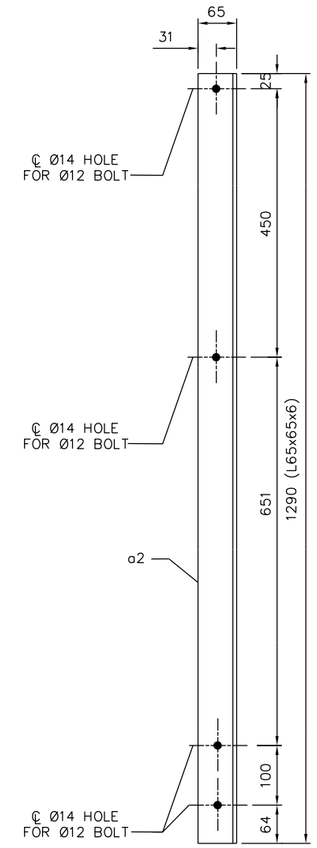

HANDRAIL POST S8/P2

MAKE: 12
48–12 ø A307 BOLTS

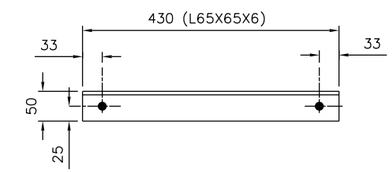

HANDRAIL S4/H4

MAKE: 2
4–Ø12 A307 BOLTS

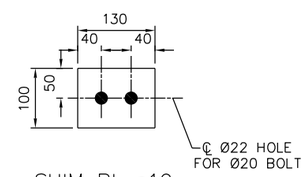

SHIM PL p19

MAKE: 2
15mm SHIM PLATES

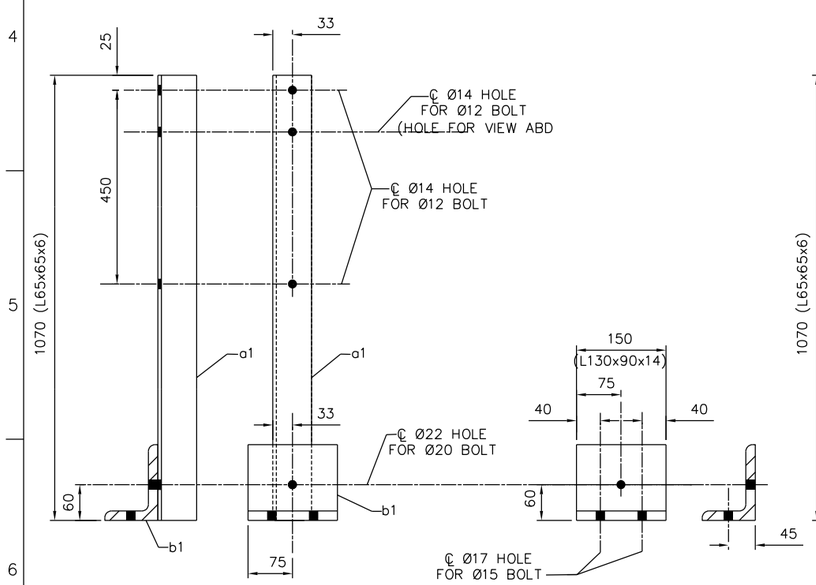

HANDRAIL POST S4/P1

MAKE: 9
28–Ø12 A307 BOLTS
42–Ø15 A307 BOLTS

b1

8–Ø20 A307 BOLTS

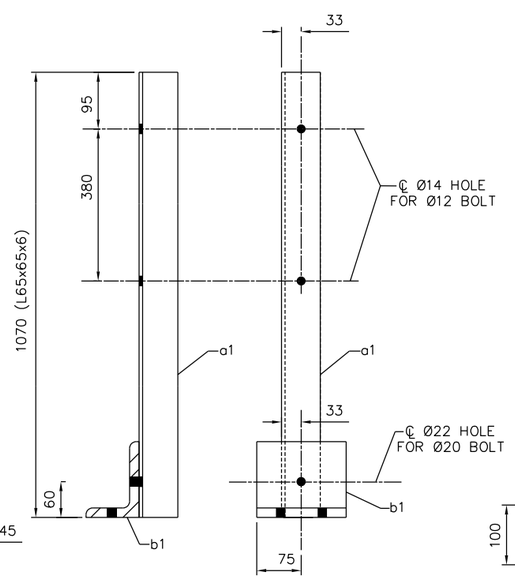

HANDRAIL POST S4/P3

MAKE: 8
28–Ø12 A307 BOLTS
42–Ø15 A307 BOLTS

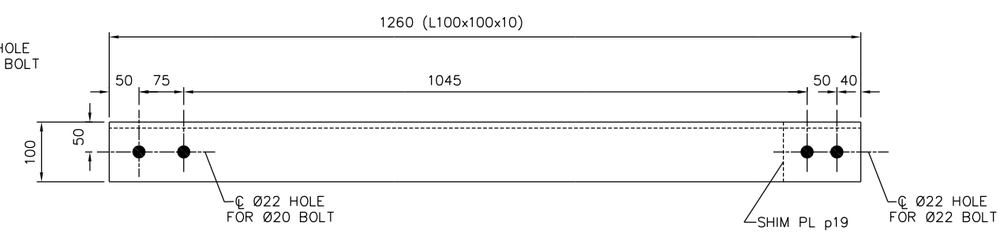

BEAM S8/BR1

MAKE: 2
4–Ø15 A307 BOLTS

UNLESS NOTED OTHERWISE, LINEAR DIMENSIONS ARE IN MILLIMETERS.

SHIP	MARK	NO. PCS	DESCRIPTION	LENGTH (mm)	FAB. MARK	NOTES
2	S4/H1		L65x65x6	4950		
2	S4/H2		L65x65x6	4950		
2	S4/H3		L65x65x6	3978		
2	S4/H4		L65x65x6	3978		
14	S4/P1					
			L65x65x6	1070		
		14	L130x90x14	150	b1	
12	S4/P2		HANDRAIL POST	1290		
		14	L65x65x6	1290	a2	
2	S8/BR1		L100x100x10	1260		
		2	PL 100x15	130	PL p19	

US Army Corps of Engineers ®
Mobile District

Symbol	No.	Description	Date	Approved
		Revisions		

Designed By:
Date: 17 DECEMBER 2009
Drawn By:
Contract No:
Checked By:
CADD CODE: M010TG17
Reviewed By:
Specification Number:
SIZE: 559x864mm
FILENAME:

U.S. ARMY ENGINEER DISTRICT
CORPS OF ENGINEERS
MOBILE, ALABAMA

AFGHANISTAN ENGINEER DISTRICT
20 METER WATER TOWER

MEMBER DETAILS

SHEET IDENTIFICATION
S–16

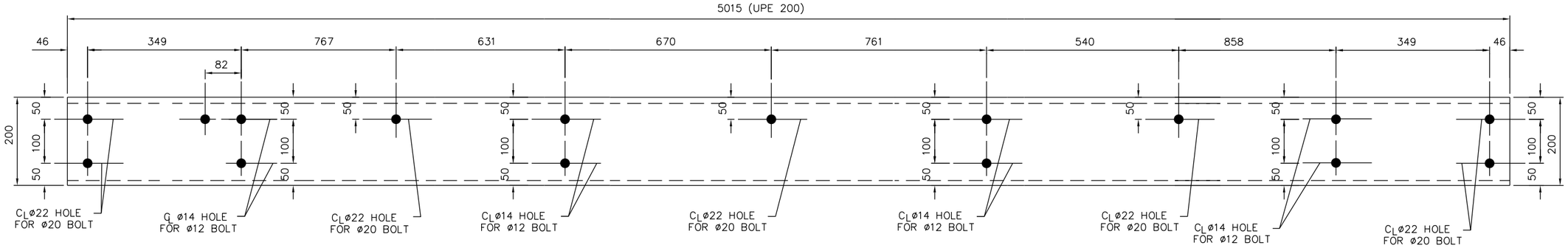

BEAM S3/B9

MAKE: 2

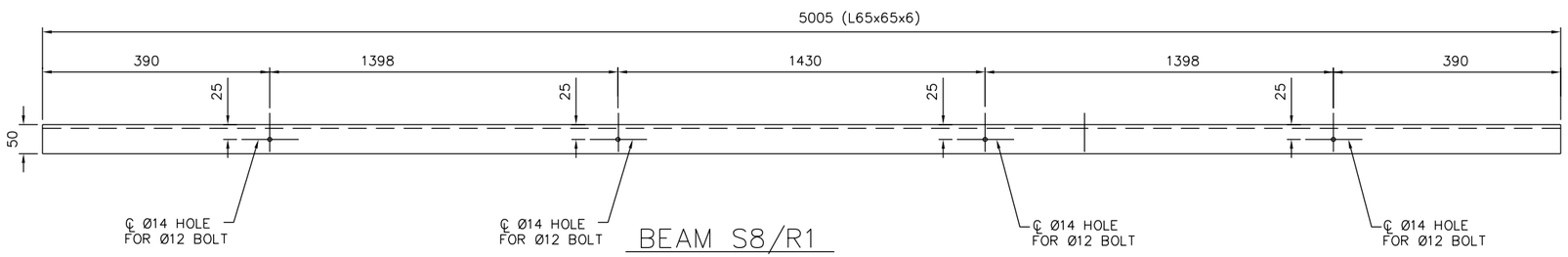

BEAM S8/R1

MAKE: 2

SHIP	MARK	NO. PCS	DESCRIPTION	LENGTH (mm)	FAB. MARK	NOTES
2	S3/B9		UPE 200	5015		
2	S8/R1		L65x65x6	5005		
2	S8/R2		L65x65x6	750		
1	S3/B10		UPE 200	992		
		1	L100x100x10	160	ca1	
4	S3/B11		L100x100x10	870		
		8	L100x100x10	100	ca2	
1	S3/B12		UPE 200	992		
		1	L100x100x10	100	ca1	

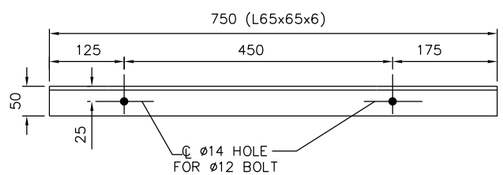

BEAM S8/R2

MAKE: 2

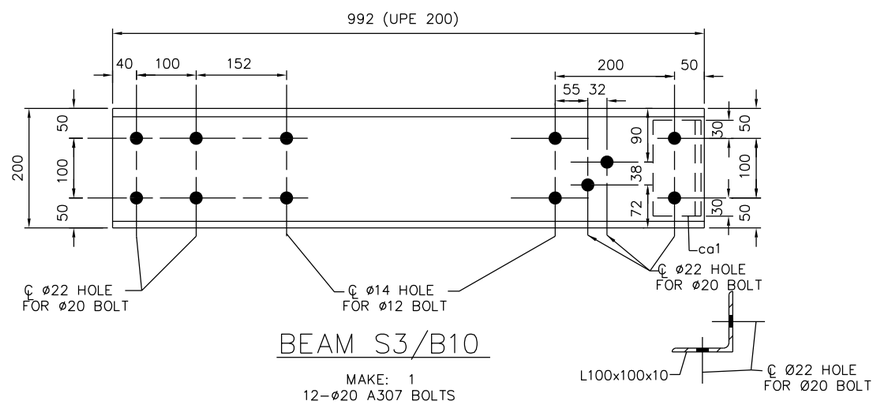

BEAM S3/B10

MAKE: 1
12-ø20 A307 BOLTS

MAKE: 2

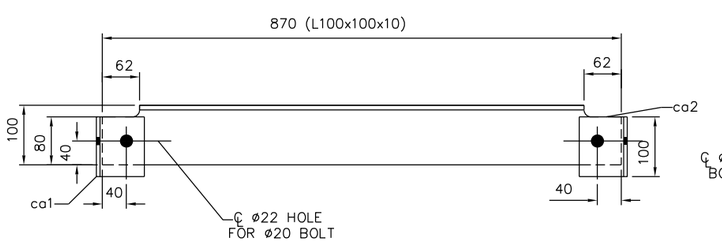

BEAM S3/B11

MAKE: 4
16-ø20 A307 BOLTS

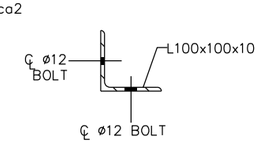

MAKE: 8

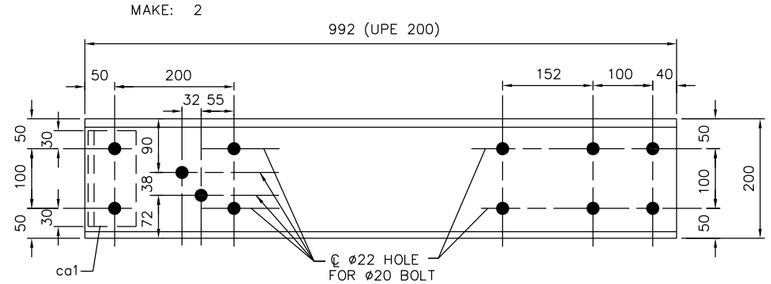

BEAM S3/B12

MAKE: 1
12-ø20 A307 BOLTS

100 0 100mm
SCALE: 1 = 5

UNLESS NOTED OTHERWISE, LINEAR DIMENSIONS ARE IN MILLIMETERS.

US Army Corps of Engineers
Mobile District

Symbol	No.	Description	Date	Approved
		Revisions		

Date: 17 DECEMBER 2009
Contract No:
CADD CODE: M010TG17
Solicitation Number:
FILENAME:
Designed By:
Drawn By:
Checked By:
Reviewed By:
SIZE: 559x864mm

U.S. ARMY ENGINEER DISTRICT
CORPS OF ENGINEERS
MOBILE, ALABAMA

AFGHANISTAN ENGINEER DISTRICT
20 METER WATER TOWER

SECTIONS & DETAILS

SHEET IDENTIFICATION

S-17

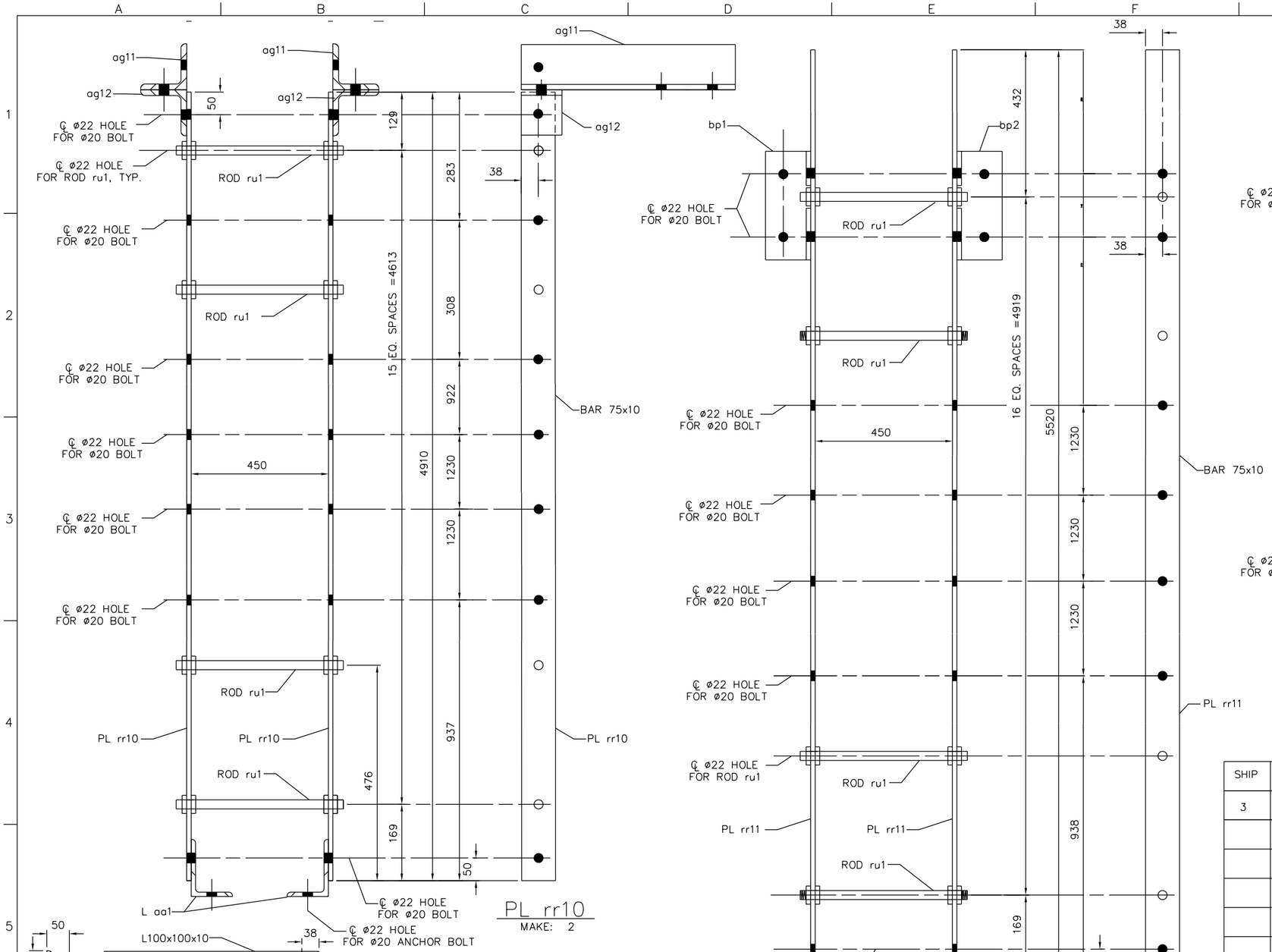

PL rr10
MAKE: 2

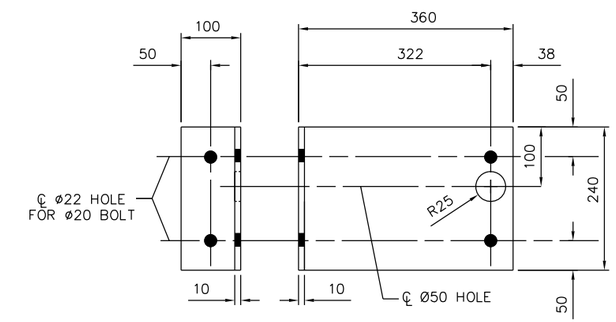

bp1
MAKE: 1

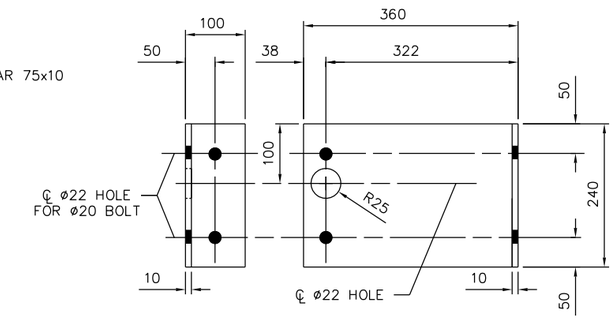

bp2
MAKE: 1

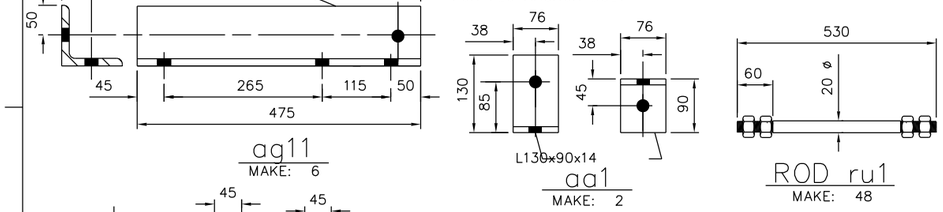

ag11
MAKE: 6

aa1
MAKE: 2

ROD ru1
MAKE: 48

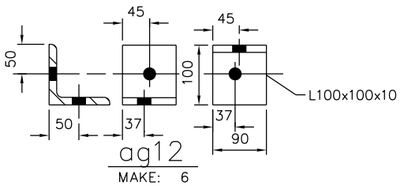

ag12
MAKE: 6

LADDER S4/L1
MAKE: 3
54-ø20 A307 BOLTS
2-ø20 A307 ANCHOR BOLTS

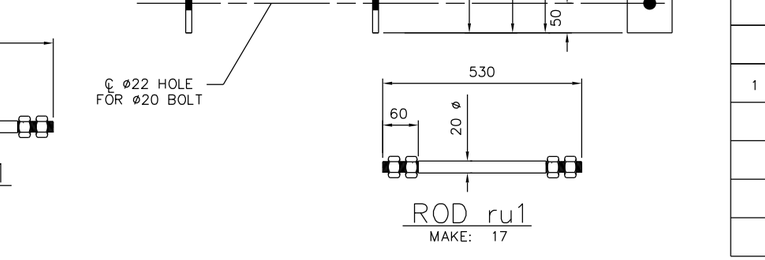

ROD ru1
MAKE: 17

LADDER S4/L2
MAKE: 1

SHIP	MARK	NO. PCS	DESCRIPTION	LENGTH (mm)	FAB. MARK	WEIGHT	NOTES
3	S4/L1		LADDER	4910			
		6	PL 10x75	4910	PL rr10		
		48	ø20	530	ROD ru1		
		2	L130x90x14	75	aa1		
		6	L100x100x10	475	ag11		
		6	L100x100x10	76	ag12		
1	S4/L2		LADDER	4910			
		2	PL 10x75	5920	PL rr11		
		17	ø20	530	ROD ru1		
		1	PL 10x460	240	bp1		
		1	PL 10x460	240	bp2		

UNLESS NOTED OTHERWISE, LINEAR DIMENSIONS ARE IN MILLIMETERS.

US Army Corps of Engineers
Mobile District

Symbol	No.	Description	Date	Approved
		Revisions		

Designed By:
Date: 17 DECEMBER 2009
Drawn By:
Contract No:
Checked By:
CADD CODE: M010TG17
Reviewed By:
Solicitation Number:
SIZE: 559x864mm
FILENAME:

U.S. ARMY ENGINEER DISTRICT
CORPS OF ENGINEERS
MOBILE, ALABAMA

AFGHANISTAN ENGINEER DISTRICT
20 METER WATER TOWER

SECTIONS & DETAILS

SHEET IDENTIFICATION
S-18

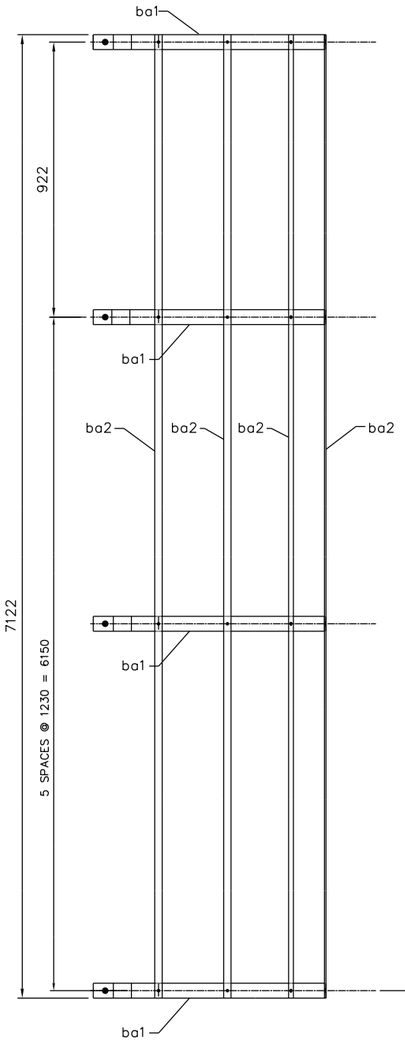

LADDER CAGE S4/G1
MAKE: 1

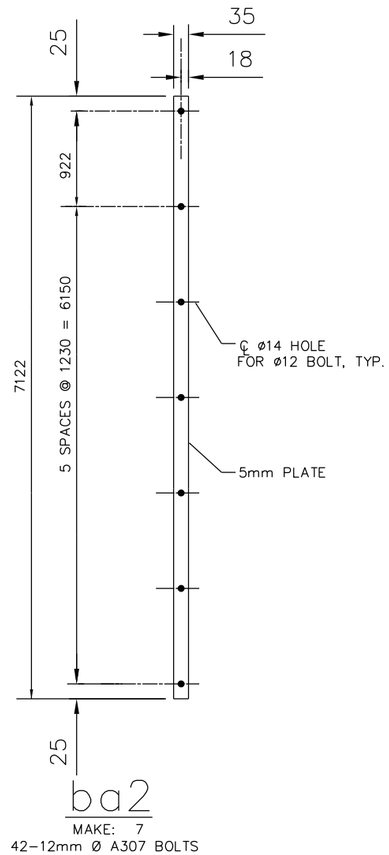

ba2
MAKE: 7
42–12mm Ø A307 BOLTS

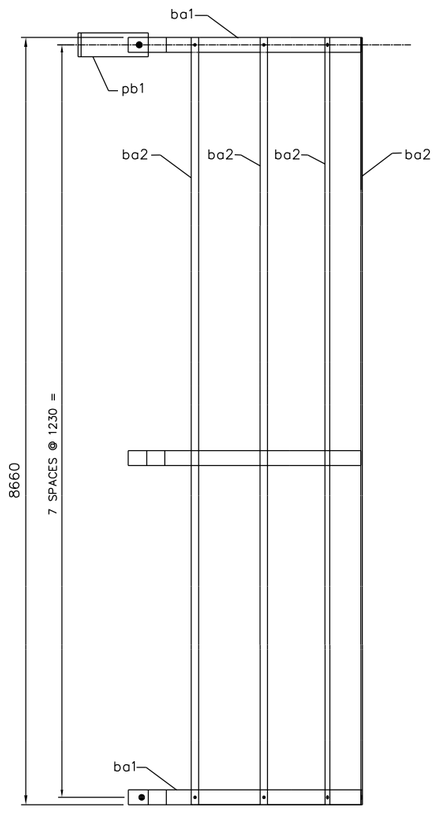

LADDER CAGE S4/G2
MAKE: 1

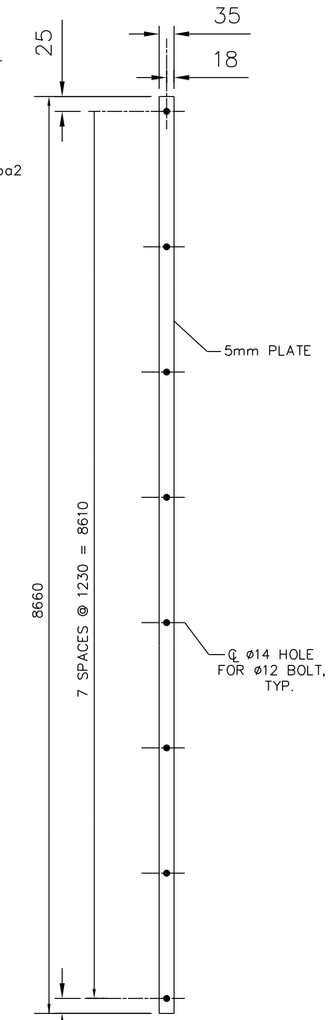

ba3
MAKE: 7

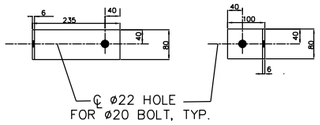

pb1
MAKE: 2

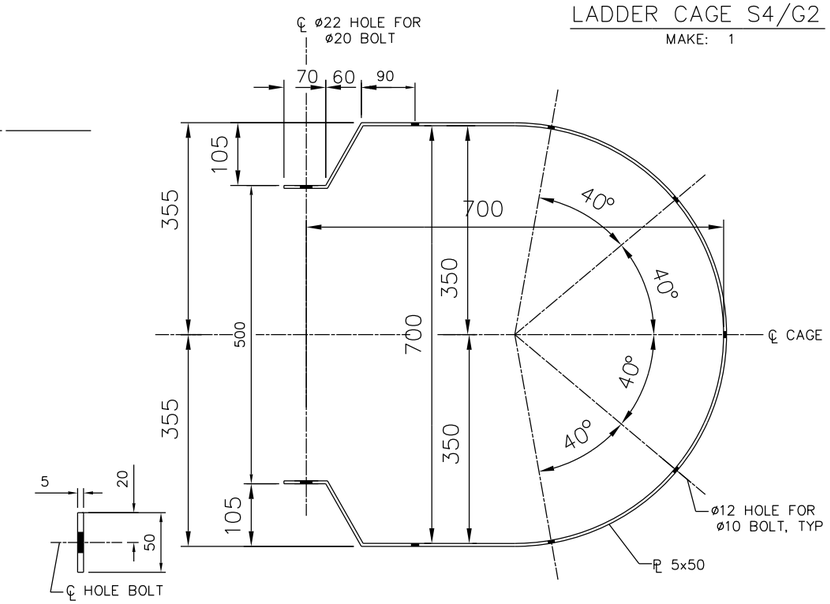

ba1
MAKE: 15

SHIP	MARK	NO. PCS	DESCRIPTION	LENGTH (mm)	FAB. MARK	WEIGHT	NOTES
1	S4/G1		LADDER CAGE	7150			
		6	PL 5x50	1990	ba1		
		7	PL 5x35	7122	ba2		
1	S4/G2		LADDER CAGE	8660			
		8	PL 5x50	1990	ba1		
		7	PL 5x35	8660	ba2		
		2	PL 6x80	335	pb1		

UNLESS NOTED OTHERWISE, LINEAR DIMENSIONS ARE IN MILLIMETERS.

US Army Corps of Engineers
Mobile District

Symbol	No.	Description	Date	Approved
		Revisions		

Designed By:
Drawn By:
Checked By:
Reviewed By:
Date: 17 DECEMBER 2009
Contract No:
CADD CODE: M010TG17
Specification Number:
FILENAME:
SIZE: 559x864mm

U.S. ARMY ENGINEER DISTRICT
CORPS OF ENGINEERS
MOBILE, ALABAMA

AFGHANISTAN ENGINEER DISTRICT
20 METER WATER TOWER

MEMBER DETAILS

SHEET IDENTIFICATION
S–19

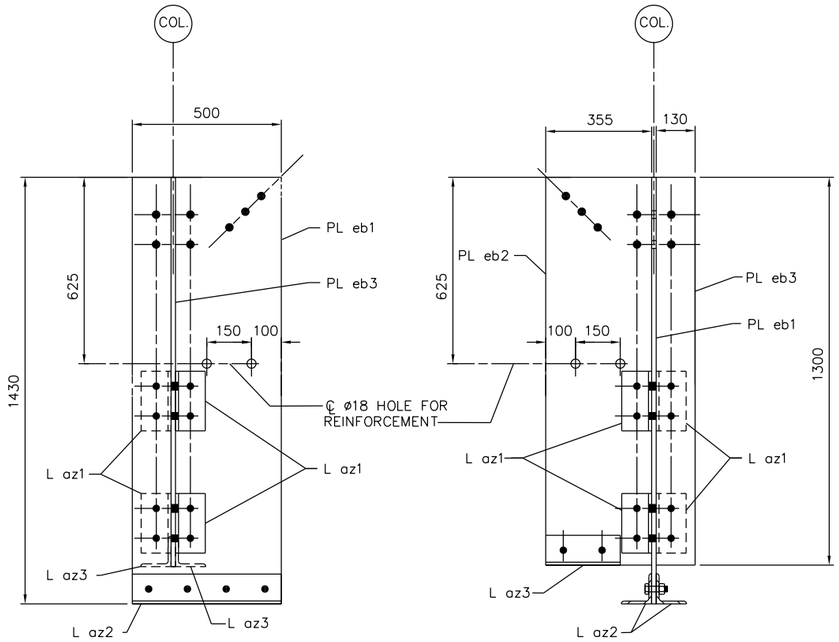

EMBEDDED ANCHOR PLATE S6/E1

MAKE: 4

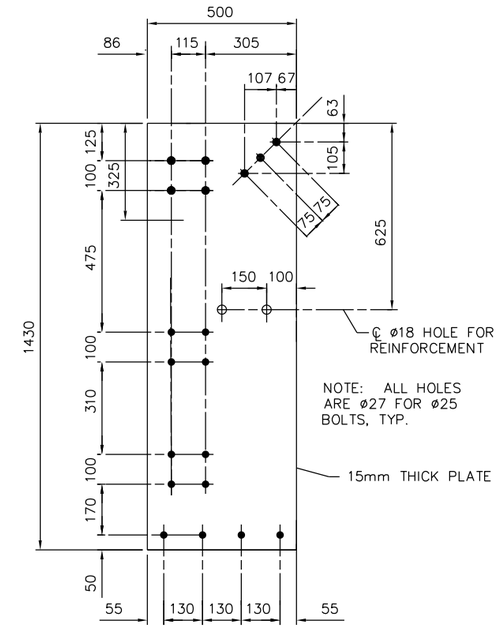

PL eb1

MAKE: 4
76–ø25 A307 BOLTS

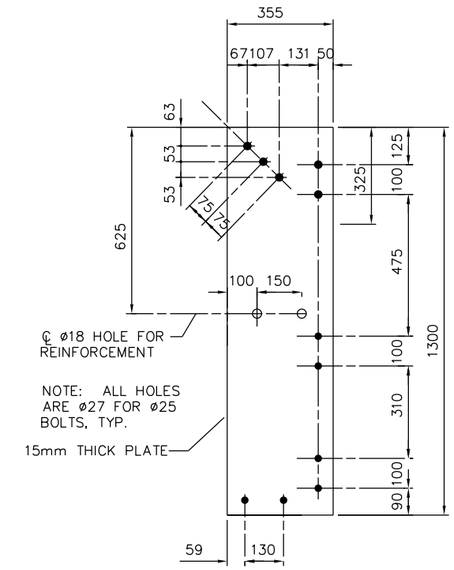

PL eb2

MAKE: 4
44–ø25 A307 BOLTS

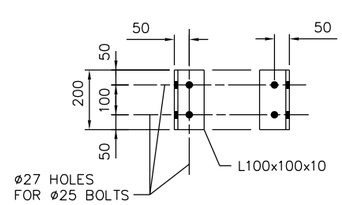

L az1

MAKE: 16

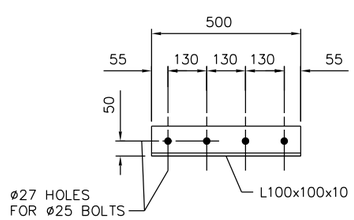

L az2

MAKE: 8

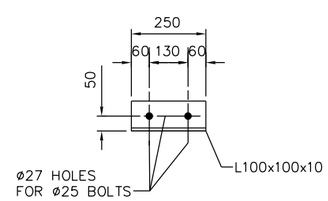

L az3

MAKE: 8

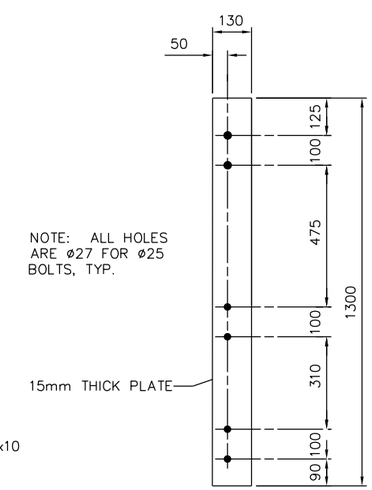

PL eb3

MAKE: 4
24–ø25 A307 BOLTS

SHIP	MARK	NO. PCS	DESCRIPTION	LENGTH (mm)	FAB. MARK	WEIGHT	NOTES
4	S6/E1		EMBEDDED ANCHOR PLATE	1430			
		4	PL 15x500	1430	PL eb1		
		4	PL 15x355	1300	PL eb2		
		4	PL 15x130	1300	PL eb3		
		16	L100x100x10	200	L az1		
		8	L100x100x10	500	L az2		
		8	L100x100x10	250	L az3		

UNLESS NOTED OTHERWISE, LINEAR DIMENSIONS ARE IN MILLIMETERS.

US Army Corps of Engineers®
Mobile District

Symbol	No.	Description	Date	Approved
		Revisions		

Designed By:
Date: 17 DECEMBER 2009
Drawn By:
Contract No:
Checked By:
CADD CODE: M010TG17
Reviewed By:
Solicitation Number:
SIZE: 559x864mm
FILENAME:

U.S. ARMY ENGINEER DISTRICT
CORPS OF ENGINEERS
MOBILE, ALABAMA

AFGHANISTAN ENGINEER DISTRICT
20 METER WATER TOWER

MEMBER DETAILS

SHEET IDENTIFICATION

S-20

NOTES:
1. ROUTE 100MM PIPING AND INSULATION TO TANK DISCHARGE FLANGE. CONTRACTOR SHALL INSTALL INSULATION AND CLADDING SUCH THAT EXPOSED PIPING AND VALVES ARE PROTECTED AGAINST FREEZING. INSULATION AND CLADDING SHALL COMPLETELY ENCLOSE TANK FLANGE.
2. ROUTE 50MM PIPING AND INSULATION TO TANK FILL FLANGE. CONTRACTOR SHALL INSTALL INSULATION AND CLADDING SUCH THAT ALL EXPOSED PIPING AND VALVES ARE PROTECTED AGAINST FREEZING. INSULATION AND CLADDING SHALL COMPLETELY ENCLOSE TANK FLANGE.
3. INSULATION AND CLADDING SHALL FULLY ENCASE PIPING AND VALVES. THERE SHALL BE NO EXPOSED PIPING WHEN INSULATION IS COMPLETE. ALUMINUM CLADDING SHALL BE INSTALLED USING STAINLESS STEEL CLAMPS AT 1.0 M ON CENTER.
4. TANK SHALL BE ORIENTED SUCH THAT DISCHARGE FLANGE IS TOWARD PIPING MOUNTED TO TOWER.
5. OVERFLOW PIPE WITH INSECT SCREEN.
6. TOWER STRUCTURAL PIPE SUPPORTS FOR 100MM AND 50MM PIPING. SEE STRUCTURAL DRAWINGS FOR LOCATIONS.

CONTRACTOR TO COORDINATE PIPING WITH TANK MANUFACTURER TO ENSURE PROPER SUPPORT AND ADEQUATE NOZZLE STRENGTH.

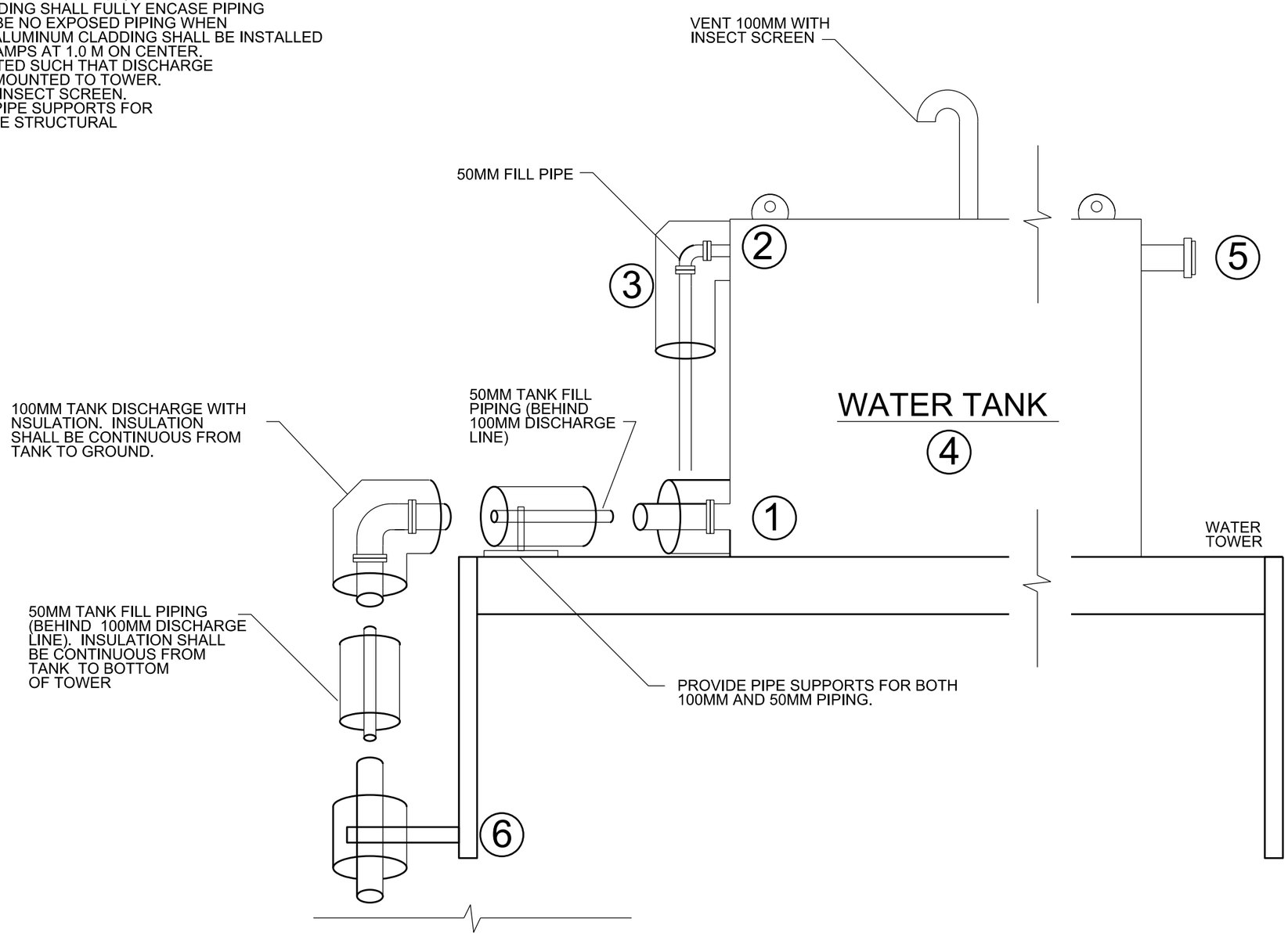

WATER TANK, PIPING AND INSULATION

NTS

US ARMY CORPS OF ENGINEERS AFGHANISTAN ENGINEER DISTRICT

SYMBOL	DESCRIPTION	DATE	APPR.	SYMBOL	DESCRIPTION	DATE	APPR.

DESIGNED BY: DATE: 17 DEC 2009 REV. ___
DWN BY: CKD BY: DESIGN FILE NO.
REVIEWED BY: DRAWING CODE:
SUBMITTED BY: FILE NAME: PLOT SCALE: PLOT DATE: XX-XX-XX

U.S. ARMY ENGINEER DISTRICT, AFGHANISTAN
CORPS OF ENGINEERS
APO AE 96338

ENGINEERING AND CONSTRUCTION DIVISION

20 METER WATER TANK
AFGHANISTAN

WATER TANK PIPING AND INSULATION

SHEET REFERENCE NUMBER:
P-01

A1 Size 594mm x 841mm

GENERAL NOTE: 50MM FILL PIPING AND 100MM DISCHARGE PIPING SHALL BE FLANGED, A53 STEEL. NO WELDED CONNECTIONS ARE ALLOWED.

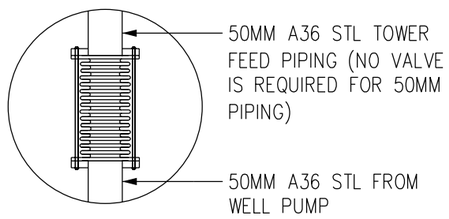

FLEXIBLE COUPLING DETAIL
NTS

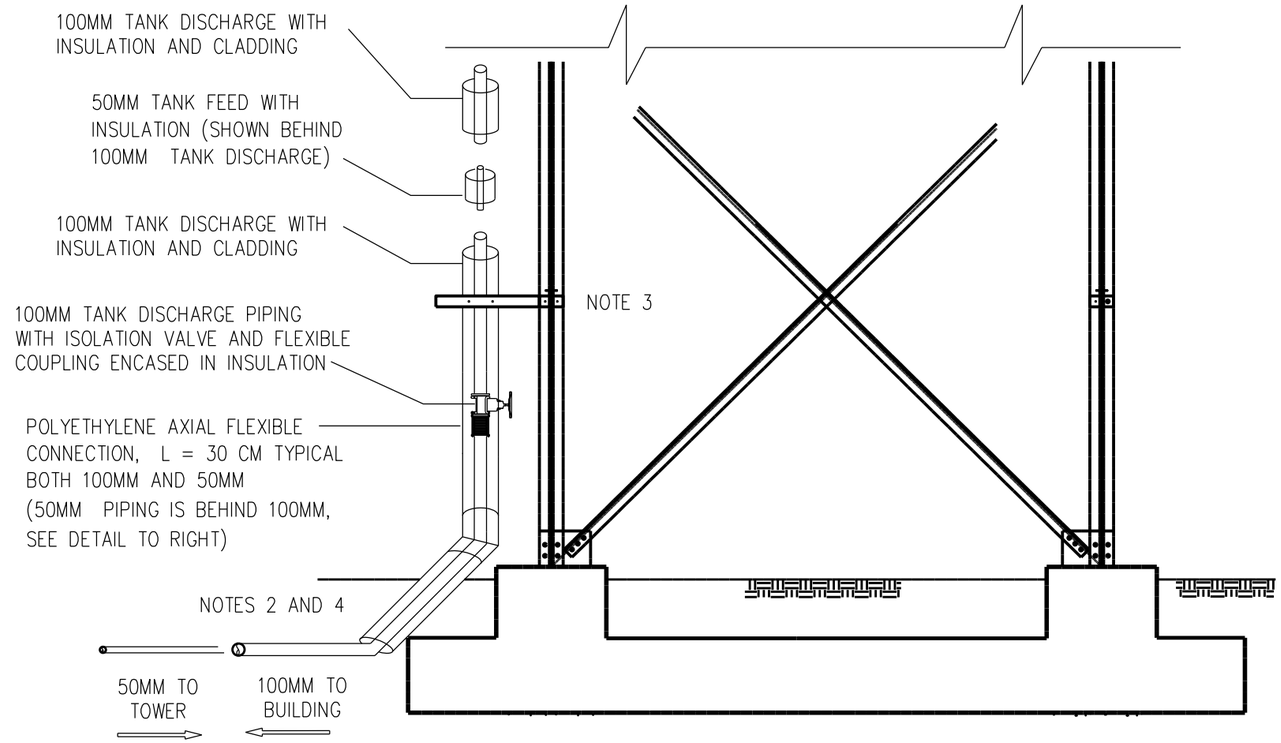

WATER TOWER ELEVATION
NTS

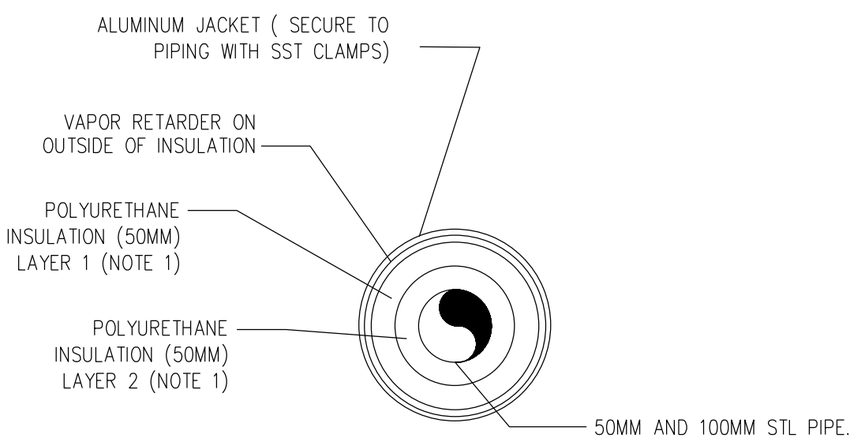

2-LAYER INSULATION DETAIL
NTS

NOTES:

1. PIPE INSULATION SHALL BE AS FOLLOWS: RIGID OR FLEXIBLE POLYURETHANE WITH A K-FACTOR OF 0.0160 W/M*HR*K (0.176 BTU*IN/HR*FT2*F) OR LESS. DENSITY OF MATERIAL SHALL BE 50 KG/M3 (2 LB/FT2) OR GREATER. WATER ABSORPTION SHALL BE 2% OR LOWER. TOTAL THICKNESS OF INSULATION SHALL BE 100MM. INSULATION SHALL BE APPLIED IN 1 OR 2 LAYERS. A SINGLE LAYER IS PREFERED. (IF 2 LAYERS ARE REQUIRED, SEAMS IN INSULATION LAYERS SHALL BE STAGGERED TO PROVIDE OVERLAPS AND PREVENT GAPS. EACH LAYER SHALL BE 50MM THICK FOR A TOTAL THICKNESS OF 100MM.) PLACE A VAPOR RETARDER ON OUTSIDE OF INSULATION. INSULATION SYSTEM SHALL BE COMPLETELY ENCLOSED IN 0.024 THICK CORRUGATED ALUMINUM JACKETS. USE SST CLAMPS TO SECURE JACKET TO OUTSIDE OF INSULATION. FULLY ENCLOSE VALVES AND FLANGES INSIDE INSULATOIN. JACKET AND INSULATION SHALL NOT HAVE BREAKS OR OPENINGS. SYSTEM SHALL BE WATERTIGHT.
2. INSULATION ON BOTH 100MM TANK FILL AND TANK DISCHARGE SHALL EXTEND 500MM BELOW GROUND SURFACE.
3. SEE SHEETS P-4, S-4, S-13 FOR LOCATIONS OF PIPE SUPPORTS AND CONNECTION DETAILS.
4. NO PIPING SHALL PENETRATE OR BE ENCASED WITHIN THE TOWER FOUNDATION OR FOOTING.

PIPING AND INSULATION DETAILS

US ARMY CORPS OF ENGINEERS AFGHANISTAN ENGINEER DISTRICT

SYMBOL	DESCRIPTION	DATE	APPR.	SYMBOL	DESCRIPTION	DATE	APPR.

DESIGNED BY: DATE: 17 DEC 2009 REV. ___
DWN BY: CKD BY: DESIGN FILE NO.
REVIEWED BY: DRAWING CODE:
SUBMITTED BY: FILE NAME: PLOT SCALE: PLOT DATE: XX-XX-XX

U.S. ARMY ENGINEER DISTRICT, AFGHANISTAN
CORPS OF ENGINEERS
APO AE 96338

ENGINEERING AND CONSTRUCTION DIVISION

20 METER WATER TANK
AFGHANISTAN

PIPING AND INSULATION DETAILS

SHEET REFERENCE NUMBER:
P-02

A1 Size 594mm x 841mm

NOTES FOR SCOPE ITEMS INCLUDED IN WATER TOWER CONSTRUCTION:

COMPONENTS LISTED AND SHOWN ARE INTENDED TO PROVIDE A DRAIN LINE FOR THE FEED POWER TO THE WATER TOWER. THE SOLENOID VALVE IS TO REMAIN OPEN EXCEPT WHEN THE PUMP IS RUNNING. PIPING FROM THE TOWER WILL DRAIN BACK INTO THE WELL.

1. 16MM SOLENOID VALVE; NORMALLY OPEN; POWER TO CLOSE; SPRING OPEN; FAIL OPEN. PROVIDE POWER TO OPEN THE SOLENOID FROM THE WELL PUMP CONTROL PANEL. POWER SHALL CLOSE THE VALVE WHEN THE PUMP TURNS ON AND INTERNAL VALVE SPRING SHALL OPEN THE VALVE WHEN THE PUMP MOTOR IS TURNED OFF.

2. SUPPORT 16MM PVC DRAIN LINE AT EVERY PIPE SUPPORT USING PIPE CLAMPS.

3. 16MM DRAIN PIPING WITH GATE VALVE AND STRAINER.

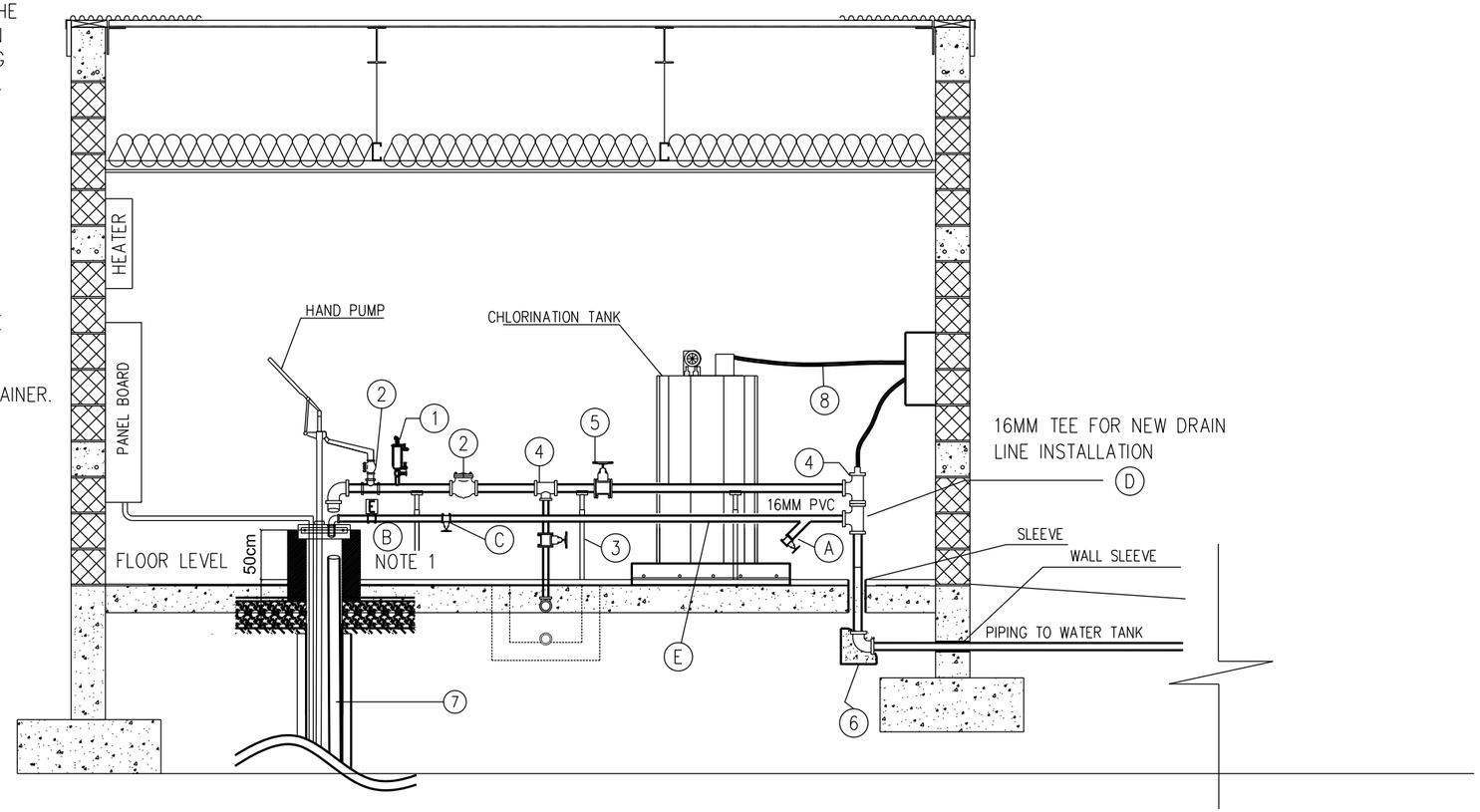

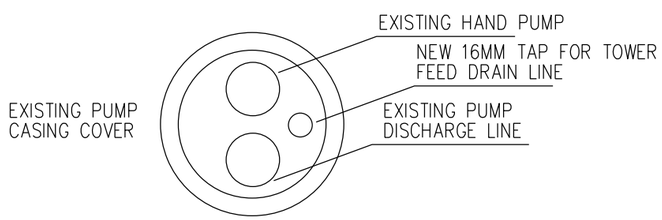

EXISTING EQUIPMENT DESCRIPTION	
ITEM	DESCRIPTION
1	AIR RELEASE VALVE
2	CHECK VALVE
3	PIPE SADDLE SUPPORT
4	TEE
5	GATE VALVE
6	90° ELBOW
7	RISER PIPE 80
8	ø12MM FLEXIBLE PVC PIPE

TOWER ADDITION EQUIPMENT DESCRIPTION	
ITEM	DESCRIPTION
A	16MM STRAINER W/ GATE VALVE
B	16MM ELECTRIC SOLENOID
C	GATE VALVE
D	16MM TEE
E	16MM SCH 80 PVC

WELL HOUSE SECTION PIPING

NTS

US ARMY CORPS OF ENGINEERS AFGHANISTAN ENGINEER DISTRICT

SYMBOL	DESCRIPTION	DATE	APPR.	SYMBOL	DESCRIPTION	DATE	APPR.

DESIGNED BY: DWN BY: CKD BY: REVIEWED BY: SUBMITTED BY:
DATE: 17 DEC 2009
DESIGN FILE NO.
DRAWING CODE:
FILE NAME:
PLOT SCALE:
PLOT DATE: XX-XX-XX
REV. __

U.S. ARMY ENGINEER DISTRICT, AFGHANISTAN
CORPS OF ENGINEERS
APO AE 96338

ENGINEERING AND CONSTRUCTION DIVISION

20 METER WATER TANK
AFGHANISTAN

WELL HOUSE SECTION PIPING

SHEET REFERENCE NUMBER:
P-03

A1 Size 594mm x 841mm

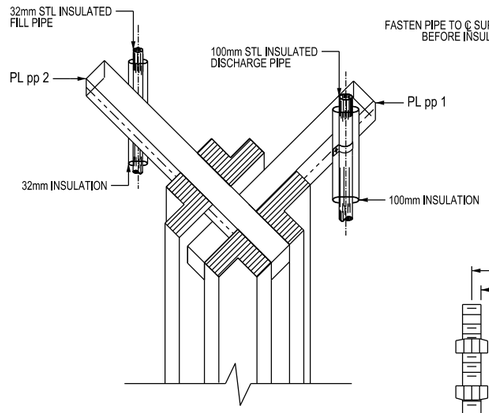

CONNECTION OF WATER PIPE DETAIL:
SCALE: NTS

NOTE: SEE STRUCTURAL SHEET S-13 FOR PLUMBING SUPPORT PLATES

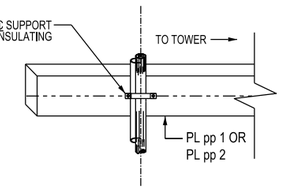

CONNECTION PIPE SUPPORT DETAIL:
SCALE: NTS

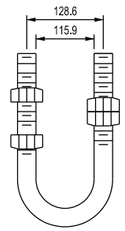

THREAD SIZE-12mm
THREAD LENGTH-76.2mm
TANGENT-114.3mm
TOP OF PIPE TO TOP OF THREAD-57.1
WT.-42.6kg

PIPE CLAMP DETAILS: NOMINAL 100mm
SCALE: NTS

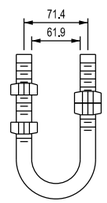

THREAD SIZE-10mm
THREAD LENGTH-63.5mm
TANGENT-82.5mm
TOP OF PIPE TO TOP OF THREAD-52.4
WT.-14.0kg

PIPE CLAMP DETAILS: NOMINAL 50mm
SCALE: NTS

PLUMBING NOTES:

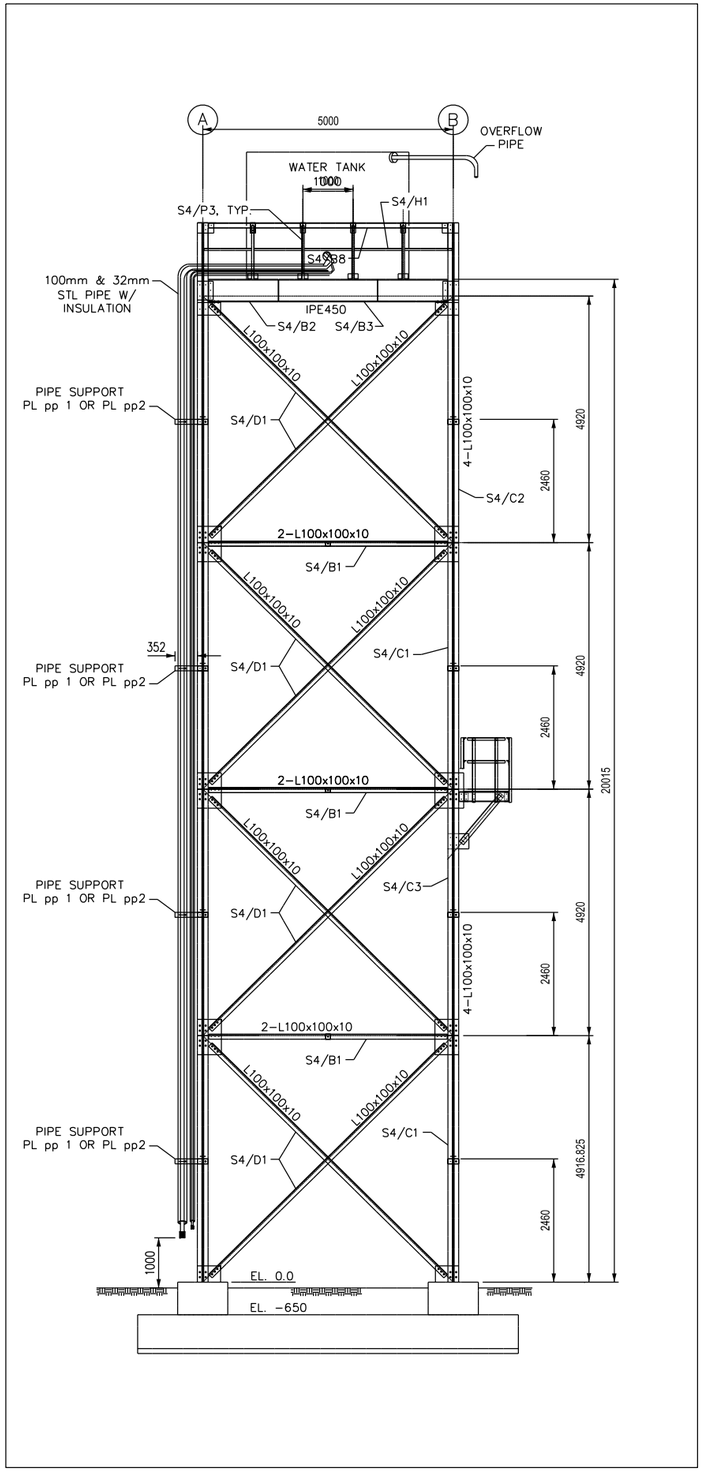

PIPING ELEVATION
1:50

US ARMY CORPS OF ENGINEERS
AFGHANISTAN ENGINEER DISTRICT

SYMBOL	DESCRIPTION	DATE	APPR.	SYMBOL	DESCRIPTION	DATE	APPR.

DESIGNED BY: DATE: 17 DEC 2009 REV. ___
DWN BY: CKD BY: DESIGN FILE NO.
REVIEWED BY: DRAWING CODE:
SUBMITTED BY: FILE NAME: PLOT SCALE: PLOT DATE: XX-XX-XX

U.S. ARMY ENGINEER DISTRICT, AFGHANISTAN
CORPS OF ENGINEERS
APO AE 96338

ENGINEERING AND CONSTRUCTION DIVISION

20 METER WATER TANK
AFGHANISTAN

PIPING ELEVATION

SHEET REFERENCE NUMBER:
P-04

A1 Size 594mm x 841mm

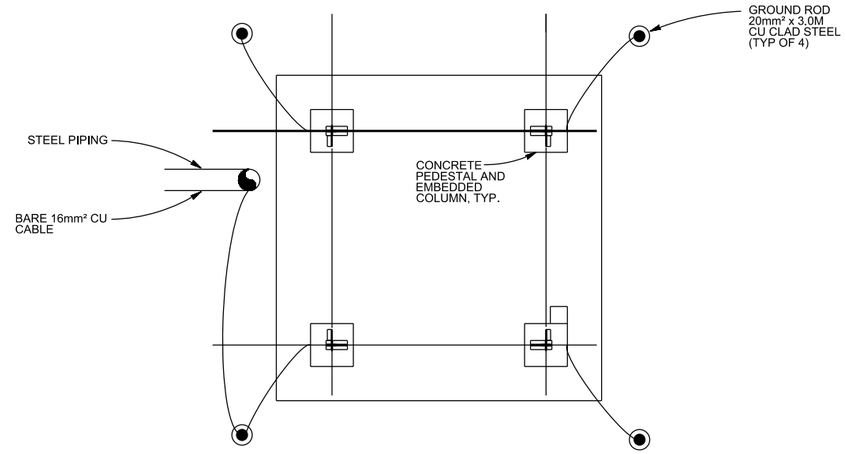

01 GROUNDING ELECTRODE PLAN
N.T.S.

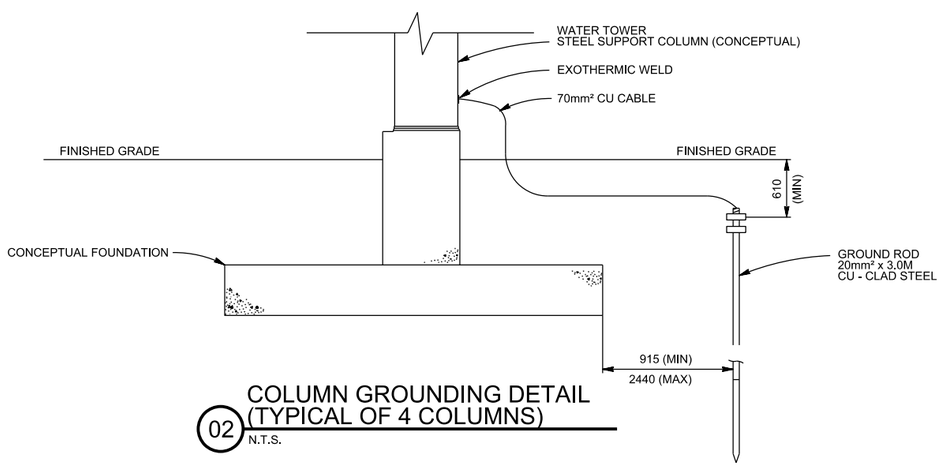

02 COLUMN GROUNDING DETAIL
(TYPICAL OF 4 COLUMNS)
N.T.S.

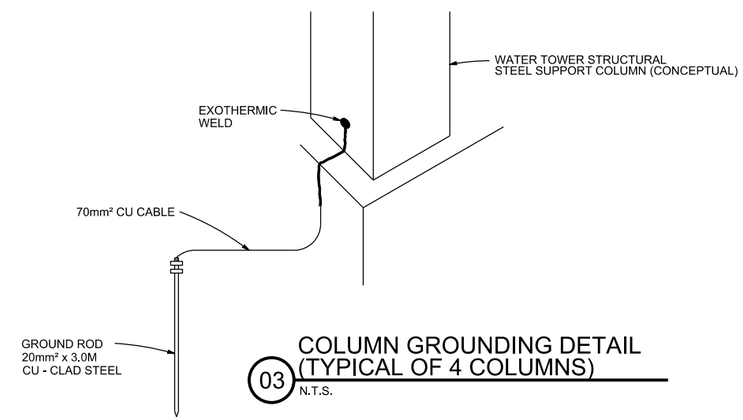

03 COLUMN GROUNDING DETAIL
(TYPICAL OF 4 COLUMNS)
N.T.S.

LIGHTING PROTECTION PLANS AND DETAILS

N.T.S.

NOTES:

1. CONTRACTOR SHALL MAKE ALL METALLIC ELEMENTS OF WATER TOWER TANK AND SUPPORT STRUCTURE ELECTRICALLY CONTINUOUS BY BOLTING REINFORCEMENT STEEL SHALL BE MADE ELECTRICALLY CONTINUOUS BY METALLIC WIRE TIES.
2. BOND EACH METALLIC UNDERGROUND PIPE TO AT LEAST ONE GROUND ROD WITH 16mm² CU CABLE.
3. EACH COLUMN SHALL BE BONDED TO A 20mm² x 3.0M CU CLAD STEEL GROUND ROD VIA A BARE 70mm² CU CABLE. CABLE SHALL BE EXOTHERMIC ALLY WELDED TO COLUMN 150mm ABOVE CONCRETE FOUNDATION.

US ARMY CORPS
OF ENGINEERS
AFGHANISTAN
ENGINEER DISTRICT

SYMBOL	DESCRIPTION	DATE	APPR.	SYMBOL	DESCRIPTION	DATE	APPR.

DESIGNED BY: DATE: 17 DEC 2009 REV. ___
DWN BY: CADD BY: DESIGN FILE NO.
REVIEWED BY: DRAWING CODE:
SUBMITTED BY: FILE NAME: ___ PLOT SCALE: ___ PLOT DATE: XX-XX-XX

U.S. ARMY ENGINEER DISTRICT, AFGHANISTAN
CORPS OF ENGINEERS
APO AE 96338

ENGINEERING AND
CONSTRUCTION DIVISION

20 METER WATER TANK
AFGHANISTAN

LIGHTING PROTECTION
DETAILS

SHEET
REFERENCE
NUMBER:
E-01

A1 Size 594mm x 841mm