STANDARD BUILDING DESIGNS

LATRINE BUILDING
MEDIUM

SHEET INDEX

G1 COVER SHEET

S1 GENERAL NOTES & DESIGN CRITERIA
S2 DESIGN CRITERIA & SCHEDULES
S3 SCHEDULES
S4 FOUNDATION PLAN
S5 ROOF FRAMING PLAN
S6 FOUNDATION SECTIONS & DETAILS
S7 SECTIONS & DETAILS
S8 TYPICAL DETAILS

A1 FLOOR PLAN AND ENLARGED PLANS
A2 ROOF PLANS AND DETAILS
A3 EXTERIOR ELEVATIONS
A4 BUILDING & WALL SECTIONS
A5 DOOR, WINDOW & FINISH TYPES & DETAILS
A6 LATRINE AND SHOWER DETAILS

P1 FLOOR PLAN PLUMBING
P2 DRAINAGE ISOMETRIC
P3 TYPICAL BUILDING PLUMBING SCHEMATICS
P4 PLUMBING SYMBOLS & ABBREVIATIONS, NOTES, SCHEDULES & DETAILS

M1 FLOOR PLAN-HVAC

E0 ELECTRICAL SYMBOLS AND ABBREVIATIONS
E1 LIGHTING PLAN
E2 POWER AND SYSTEMS PLAN
E3 DETAILS
E4 LIGHT FIXTURE SCHEDULE
E5 PANEL SCHEDULES AND RISER DIAGRAM

US Army Corps of Engineers
Afghanistan Engineer District

SYMBOL	DESCRIPTION	DATE	APR

DESIGNED BY: DATE:
DWN BY: SUBMITTED BY:
CHK BY: FILE NO.: ANPSDG-001XXX.DWG

STANDARD DESIGN
VARIOUS PROJECTS
VARIOUS LOCATIONS, AFGHANISTAN
LATRINE BUILDING
MEDIUM
COVER SHEET

SHEET REFERENCE NUMBER:
G1

STRUCTURAL ABBREVIATIONS:

ACI	AMERICAN CONCRETE INSTITUTE
AISC	AMERICAN INSTITUTE OF STEEL CONSTRUCTION
ASTM	AMERICAN SOCIETY FOR TESTING AND MATERIALS
ARCH	ARCHITECTURAL
B	BOTTOM
BLDG	BUILDING
BOTT	BOTTOM
℄	CENTER LINE
CFMRF	COLD FORM METAL ROOF FRAME
CFMF	COLD FORM METAL FRAME
CFS	COLD FORMED STEEL
CIP	CAST–IN–PLACE
CIPL	CAST–IN–PLACE LINTEL
CJ	CONTROL JOINT
CLR	CLEAR
CMU	CONCRETE MASONRY UNIT
COEFF	COEFFICIENT
COL	COLUMN
CONC	CONCRETE
CONT	CONTINUOUS
COORD	COORDINATE
CSJ	CONSTRUCTION JOINT
CTJ	CONTROL JOINT
DIA	DIAMETER
DIAG	DIAGONAL
DIM	DIMENSION
DWG	DRAWING
DWL	DOWEL
EA	EACH
EF	EACH FACE
ELEC	ELECTRICAL
ELEV	ELEVATION
EMBED	EMBEDMENT
EQUIV	EQUIVALENT
ETC	ET CETERA
EW	EACH WAY
EXP	EXPANSION
EXT	EXTERIOR
FTG	FOOTING
GA	GAUGE
HORIZ	HORIZONTAL
HRS	HOURS
IBC	INTERNATIONAL BUILDING CODE
INFO	INFORMATION
INT	INTERIOR
Kg	KILOGRAM
Km	KILOMETER
kPa	KILOPASCAL
L#	ANGLE (# INDICATES SIZE)
LONG	LONGITUDINAL
LLV	LONG LEG VERTICAL
M	METER
MAX	MAXIMUM
MBM	METAL BUILDING MANUFACTURER
MECH	MECHANICAL
MFG	MANUFACTURER
MID	MIDDLE
MIN	MINIMUM
MISC	MISCELLANEOUS
MM	MILLIMETER
MPa	MEGAPASCAL
MTL	METAL
MWFRS	MAIN WIND FORCE RESISTING SYSTEM
N	NEWTON
N	NORTH
N/A	NOT APPLICABLE
#	NUMBER SYMBOL FOR REBAR SIZE
NTS	NOT TO SCALE
O.C.	ON CENTER
OPNG	OPENING
P or PL	PLATE
PRE–ENG	PRE–ENGINEERED
REINF	REINFORCED
REQ'D	REQUIRED
SIM	SIMILAR
SPECS	SPECIFICATIONS
STD	STANDARD
STRUCT	STRUCTURAL
SW	SHEAR WALL
T	TOP
T/	TOP OF
T/ELEV	TOP ELEVATION
T&B	TOP AND BOTTOM
THK	THICK
TYP	TYPICAL
UFC	UNIFIED FACILITIES CRITERIA
UON	UNLESS OTHERWISE NOTED
VERT	VERTICAL
W	WIDTH
W/	WITH

GENERAL NOTES

1.0 THIS PROJECT HAS BEEN DESIGNED FOR THE WEIGHTS AND MATERIALS INDICATED ON THE SHEETS AND FOR THE LIVE LOADS INDICATED IN THE DESIGN DATA. IT IS THE CONTRACTOR'S RESPONSIBILITY TO DETERMINE ALLOWABLE CONSTRUCTION LOADS AND TO PROVIDE PROPER DESIGN AND CONSTRUCTION OF FALSEWORK, FORMWORK, STAGING, BRACING, SHEETING AND SHORING, ETC.

1.1 COORDINATE THESE SHEETS WITH THE ARCHITECTURAL, MECHANICAL, ELECTRICAL, PLUMBING, AND CIVIL SHEETS. ALL DIMENSIONS SHOWN ON THE SHEETS ARE MILLIMETERS UNLESS NOTED OTHERWISE.

1.2 THE CONTRACTOR SHALL VERIFY AND COORDINATE ALL FLOOR AND ROOF OPENING SIZES AND LOCATIONS, EQUIPMENT PAD SIZES AND LOCATIONS, ANCHOR BOLT LAYOUTS, ETC WITH EQUIPMENT SELECTED. THE CONTRACTOR SHALL MAKE ANY REQUIRED MODIFICATIONS AT NO ADDITIONAL COST.

1.3 THE CONTRACTOR SHALL REFER TO THE ARCHITECTURAL, MECHANICAL, ELECTRICAL AND PLUMBING SHEETS FOR SLEEVES, CURBS, INSERTS OR OPENINGS, ETC. NOT HEREIN INDICATED.

1.4 SLAB OPENINGS SMALLER THAN 250mm DIA TO BE CORE DRILLED IN FIELD UON. SEE MECHANICAL, ELECTRICAL AND PLUMBING SHEETS FOR LOCATIONS OF THESE OPENINGS.

1.5 WORK NOT INCLUDED ON THE SHEETS BUT IMPLIED TO BE SIMILAR TO THAT SHOWN AT CORRESPONDING PLACES ELSEWHERE ON THE SHEETS SHALL BE REPEATED.

1.6 IN CASE OF CONFLICT BETWEEN THE NOTES, DETAILS AND SPECIFICATIONS THE MOST RIGID REQUIREMENTS SHALL GOVERN.

1.7 SEE ARCHITECTURAL SHEETS FOR LOCATIONS OF MASONRY AND DRYWALL NON–LOAD BEARING PARTITIONS. PROVIDE COMPRESSIBLE FIRESAFING AT TOP OF WALL AS REQUIRED BY ARCHITECTURAL SHEETS.

1.8 COORDINATE FINISHED FLOOR DATUM ELEVATION 0.0m WITH THE CIVIL SHEETS.

2.0 FOUNDATION NOTES

2.1 THE GEOTECHNICAL ANALYSIS FOR THIS PROJECT IS THE RESPONSIBILITY OF THE CONTRACTOR AWARDED THE WORK. DESIGN VALUES USED IN THE STRUCTURAL ANALYSIS OF THE BUILDINGS HEREIN INDICATED HAVE BEEN ASSUMED AND SHALL BE CONFIRMED AND VERIFIED AS PART OF THE GEOTECHNICAL INVESTIGATION. VALUES WHICH DO NOT MEET THE REQUIREMENTS INDICATED ON THE BASIS OF DESIGN SHEET SHALL BE IMMEDIATELY BROUGHT TO THE ATTENTION OF THE CONTRACTING OFFICER FOR CONSIDERATION AND DETERMINATION ON THE NEXT APPROPRIATE COURSE OF ACTION.

2.2 SEE THE SPECIFICATION FOR ADDITIONAL REQUIREMENTS TO THOSE OUTLINED IN THE GEOTECHNICAL INVESTIGATION FOR EXCAVATION AND PREPARATION OF THE FOUNDATION AND THE SLAB ON GRADE SUBGRADE INCLUDING COMPACTION PROCEDURES.

2.3 EXCAVATIONS FOR FOOTINGS SHALL HAVE THE SIDES AND BOTTOMS TEMPORARILY LINED WITH 0.25mm POLYETHYLENE IF PLACEMENT OF CONCRETE DOES NOT OCCUR WITHIN 24 HRS OF THE EXCAVATION OF THE FOOTING.

2.4 FOUNDATION CONDITIONS NOTED DURING CONSTRUCTION WHICH DIFFER FROM THOSE DESCRIBED IN THE GEOTECHNICAL REPORT SHALL BE REPORTED TO THE GENERAL CONTRACTOR BEFORE FURTHER CONSTRUCTION IS ATTEMPTED. SEE PROJECT SPECIFICATIONS.

2.5 NO FOOTINGS OR SLABS SHALL BE POURED INTO OR AGAINST SUBGRADE CONTAINING FREE WATER, FROST, ICE OR LOOSE MATERIAL. FROST DEPTH ASSUMED TO BE 800MM

2.6 ALL SLAB–ON–GRADE, TRENCH BOTTOMS AND OTHER ON–GRADE INTERIOR HORIZONTAL SURFACES SHALL BE PLACED OVER A 0.25mm VAPOR RETARDER OVER A 100mm #57 STONE WATER BARRIER PLACED ON SUBGRADE PROPERLY PREPARED IN ACCORDANCE WITH THE CONTRACT SPECIFICATIONS. (UON)

2.7 SEE PLUMBING, ELECTRICAL & CIVIL SHEETS FOR REQUIRED UNDERSLAB UTILITIES.

2.8 SEE ARCHITECTURAL SHEETS FOR ALL WATERPROOFING DETAILS AND MATERIALS.

2.9 IF UNDERMINING OF FOOTINGS OCCURS, FILL VOIDS WITH 15MPa CONCRETE. DO NOT ATTEMPT TO REPLACE AND RECOMPACT SOIL.

3.0 CONCRETE

3.1 CONCRETE SHALL HAVE THE UNIT WEIGHT AND THE MINIMUM COMPRESSIVE STRENGTHS (f'c) AT 28 DAYS AS SHOWN IN THE CONCRETE MATERIALS SCHEDULE ON SHEET S3. SEE SPECIFICATIONS FOR ADDITIONAL INFORMATION. ENTRAIN AIR TO PRODUCE TOTAL AIR CONTENT ACCORDING TO THE SPECIFICATIONS FOR CONCRETE EXPOSED TO FREEZING TEMPERATURES (EXTERIOR FOOTINGS, SLAB TURNDOWNS, EXTERIOR SLABS AND SLABS–ON–GRADE, EXTERIOR RETAINING WALLS, AND EXTERIOR GRADE BEAMS.)

3.2 NO CALCIUM CHLORIDE SHALL BE USED IN ANY CONCRETE.

3.3 MIXING, TRANSPORTING AND PLACING OF CONCRETE SHALL CONFORM TO ACI 301M–05.

3.4 ALL CONCRETE WORK SHALL CONFORM TO THE REQUIREMENTS OF THE AMERICAN CONCRETE INSTITUTE (ACI) 318M MANUAL (metric), "BUILDING CODE REQUIREMENTS FOR REINFORCED CONCRETE", AND REQUIREMENTS OUTLINED IN THE CONTRACT SPECIFICATIONS. WHEN THERE IS A CONFLICT BETWEEN ACI AND THE SPECIFICATIONS, THE MORE STRINGENT SHALL GOVERN.

3.5 CHAMFER ALL EXPOSED EXTERNAL CORNERS OF CONCRETE WITH 20mm x45 DEGREE CHAMFER UON.

3.6 CONCRETE REINFORCEMENT BARS SHALL CONFORM TO ASTM A615M–96a, GRADE 420 MPa, REINFORCING BARS SHALL NOT BE TACK WELDED, WELDED, HEATED OR CUT, UNLESS INDICATED ON THE CONTRACT DOCUMENTS. ALL LAP SPLICES SHALL BE CLASS "B" UON.

3.7 HORIZONTAL FOOTING AND HORIZONTAL WALL REINFORCEMENT SHALL BE CONTINUOUS AND SHALL HAVE 90 DEGREE BENDS AND EXTENSIONS, OR CORNER BARS OF EQUIVALENT SIZE LAPPED WITH A CLASS B TENSION SPLICE AT CORNERS AND INTERSECTIONS. TOP BAR CRITERIA SHALL APPLY IF 300mm OR MORE OF FRESH CONCRETE IS PLACED BELOW BAR.

3.8 SLABS–ON–GRADE SHALL HAVE CONSTRUCTION JOINTS OR CRACK CONTROL JOINTS AS SHOWN ON THE DRAWINGS. CONSTRUCTION JOINTS CAN BE USED AT CONTROL JOINT LOCATIONS AT CONTRACTORS OPTION. SEE SLAB PLANS & JOINT DETAILS FOR ADDITIONAL INFORMATION. FOR AREAS NOT SHOWN ON DWGS, THE MAXIMUM SPACING OF CONSTRUCTION/ CRACK CONTROL JOINTS SHALL BE 4800mm

3.9 SEE SPECIFICATIONS FOR ALL WATERPROOFING/DAMPPROOFING REQUIREMENT.

3.10 ALL CONCRETE REINFORCEMENT SHALL BE DETAILED, FABRICATED, LABELED, SUPPORTED, AND SPACED IN FORMS AND SECURED IN PLACE IN ACCORDANCE WITH THE PROCEDURES AND REQUIREMENTS OUTLINED IN THE LATEST EDITION OF THE "BUILDING CODE REQUIREMENTS FOR REINFORCED CONCRETE", ACI 318M, AND THE "MANUAL OF STANDARD PRACTICE FOR DETAILING REINFORCED CONCRETE STRUCTURES", ACI 315M, LATEST EDITION.

3.11 SHOP DRAWINGS SHOWING REINFORCING DETAILS, INCLUDING STEEL SIZES, SPACING AND PLACEMENT, SHALL BE SUBMITTED FOR REVIEW PRIOR TO FABRICATION.

3.12 ALL DOWELS SHALL MATCH SIZE AND NUMBER OF MAIN REINFORCING, UNLESS NOTED OTHERWISE ON THE SHEETS.

3.13 ADDITIONAL BARS SHALL BE PROVIDED AROUND ALL FLOOR AND WALL OPENINGS AS SHOWN ON THE SHEETS.

3.14 SEE ARCHITECTURAL SHEETS FOR TYPE AND LOCATION OF ALL FLOOR FINISHES.

3.15 THE CONTRACTOR SHALL COORDINATE ADDITIONAL WALL/SLAB OPENINGS NOT SHOWN ON STRUCTURAL SHEETS. SEE MECHANICAL, ELECTRICAL, PLUMBING AND CIVIL SHEETS.

3.16 UNLESS NOTED OTHERWISE, ALL CURBS SHALL BE REINFORCED WITH AT LEAST (1)–#13 CONTINUOUS AND #13 AT 300mm O.C. DOWELS TO STRUCTURE BELOW.

3.17 THE SUB–CONTRACTOR SHALL VERIFY ALL OPENINGS, PAD SIZES, AND ANCHOR BOLTS WITH EQUIPMENT SELECTED.

3.18 FOR ALL WALLS & PIERS, PROVIDE DOWELS INTO FOOTING AT EACH VERT REINF BAR, UON DOWEL SIZE SHALL BE SAME AS VERT REINF.

3.19 ALL DEFORMED BAR ANCHORS SHALL BE TRS NELSON DIVISION OR EQUAL 15mm DIA (UON) CONFORMING TO ASTM A–496M WITH A MINIMUM TENSILE STRENGTH OF 550 MPa. ANCHOR DIMENSIONS SHALL BE IN ACCORDANCE WITH ASTM D–19. INSTALL ANCHORS IN ACCORDANCE WITH MANUFACTURERS RECOMMENDATIONS BY AUTOMATIC ND WELDING AS INDICATED ON THE DRAWINGS. NO UNAUTHORIZED OR FIELD WELDING SHALL BE MADE WITHOUT AUTHORIZATION FROM THE MANUFACTURER.

3.20 ALL REINFORCING INDICATED TO BE WELDED SHALL BE IN ACCORDANCE WITH ASTM A706M. "LOW ALLOY STEEL DEFORMED BARS FOR CONCRETE REINFORCEMENT". ANY INSTALLATIONS USING MANUFACTURER'S EQUIPMENT SHALL BE PER MANUFACTURER'S RECOMMENDATIONS.

3.21 PROVIDE CONCRETE POUR STOPS OR FORMED AS REQUIRED FOR INSTALLATION OF ALL CONCRETE WORK.

3.22 PROVIDE ADDITIONAL (2)–#13 x 600mm REINFORCING BARS IN SLAB–ON GRADE AT ALL RE–ENTRANT CORNERS. PLACE BARS AT MID–DEPTH OF SLAB WITH A CLEARANCE OF 50mm FROM CORNER UON.

4.0 CONCRETE MASONRY

4.1 MASONRY CONSTRUCTION AND MATERIALS SHALL CONFORM TO ALL REQUIREMENTS OF THESE CONTRACT DOCUMENTS AND THE PROJECT SPECIFICATIONS.

4.2 THE SPECIFIED ULTIMATE COMPRESSIVE STRENGTH OF CONCRETE MASONRY (f'm) ON THE NET AREA IS A MINIMUM OF 10.4 MPa.

4.3 PROVIDE TWO #16 BARS CONTINUOUS IN ALL CMU AND CAST–IN–PLACE BOND BEAMS UON ON THE SHEETS. BOND BEAMS SHALL BE CONTINUOUS AND SPACED AT A MAXIMUM OF 1200mm OC VERTICALLY. ALL BOND BEAMS SHALL BE A MINIMUM OF 200mm IN DEPTH WITH REINFORCING BEING CONTINUOUS AND HAVING STANDARD ACI HOOKS AT EACH END. PROVIDE STANDARD BAR SPLICES AS SPECIFIED.

4.4 PROVIDE AS A MINIMUM (1)–#16 BAR VERTICAL REINFORCEMENT IN ALL WALLS SPACED AT A MAXIMUM 1200mm OC PROVIDE ADDITIONAL VERTICAL BARS AT EACH END OF ALL WALLS AND ON EACH SIDE OF OPENINGS IN ALL WALLS. PROVIDE STANDARD BAR SPLICES AS SPECIFIED. ALL VERTICAL REINFORCEMENT EXTENDS FULL HEIGHT OF WALL.

4.5 CMU CELLS THAT REQUIRE VERTICAL REINFORCING BARS AS INDICATED ON THE CONTRACT DRAWINGS AND/OR SPECS SHALL HAVE REINF BARS PLACED IN CENTERS OF CMU CELLS AND CONTINUOUSLY GROUTED UON.

4.6 PROVIDE LADDER TYPE JOINT REINFORCEMENT AT 200 EXTERIOR, & 400 INTERIOR ON CENTER MAXIMUM, UON MINIMUM ROD SIZE USED SHALL BE 9 GA. DEFORMED WIRE AND CONFORM TO ASTM A82, UON.

4.7 PROVIDE CONTROL JOINTS AS INDICATED ON THE ARCHITECTURAL SHEETS.

4.8 GROUT FOR MASONRY SHALL BE NORMAL WEIGHT AND HAVE A MINIMUM COMPRESSIVE STRENGTH OF 25 MPa AT 28 DAYS. GROUT SHALL CONFORM TO ASTM C476. GROUT LIFTS SHALL NOT EXCEED 1400mm.

4.9 USE MORTAR TYPE S CONFORMING TO ASTM C270, SEE SPECIFICATIONS.

4.10 CONCRETE MASONRY UNITS SHALL BE NORMAL WEIGHT AND CONFORM TO ASTM C90.

4.11 ALL CMU CELLS, OPEN CAVITIES, AND AIR SPACES SHALL BE GROUTED TO STOP FRAGMENTS FROM MORTAR BLAST

4.12 BOND BEAM REINFORCING SHALL BE DISCONTINUOUS AT CONTROL JOINTS (UON). MAXIMUM CONTROL JOINT SPACING SHALL BE AS INDICATED ON THE ARCHITECTURAL SHEETS.

4.13 CONTRACTOR SHALL COORDINATE LOCATION OF ALL OPENINGS SEE ARCH, MECH, ELEC, AND PLUMBING SHEETS FOR SIZE AND LOCATION OF OPENINGS.

4.14 MASONRY WALLS SHALL NOT BE BACK FILLED PRIOR TO THE MORTAR AND GROUT ATTAINING THEIR RESPECTIVE MAXIMUM DESIGN STRENGTHS PER SPECIFICATIONS.

5.0 ROOF DECK

5.1 STEEL ROOF DECK SHALL BE 38mm RIB HEIGHT, 18 GAUGE PRIME–PAINTED WIDE RIB (SDI TYPE B–18) UON.

5.2 ROOF DECK SHALL HAVE THE FOLLOWING MINIMUM PROPERTIES:

	18 GAUGE
MOMENT OF INERTIA, Ip	399mm^4/mm WIDTH
SECTION MODULUS (TOP OF DECK), Sn	17.58mm^3/mm WIDTH
SECTION MODULUS (BOTT OF DECK) Sp	17.10mm^3/mm WIDTH

IN ADDITION TO MEETING THE MINIMUM REQUIREMENTS ABOVE, THE DECK MANUFACTURER SHALL DESIGN THE ROOF DECK AND ATTACHMENTS TO STEEL FOR THE ROOF LOADS, INCLUDING DECK UPLIFT INDICATED ON THE DESIGN CRITERIA ON THIS SHEET AND SHEET S2. ALL ROOF DECK SHALL HAVE A MINIMUM 2–SPAN CONDITION.

5.3 ROOF DECK SHALL BE FASTENED TO THE MAIN SUPPORTS WITH #12 SELF–TAPPING TEK SCREWS IN THE BOTTOM OF THE FLUTES USING A SDI 36/7 PATTERN. DECK SIDELAPS SHALL BE ATTACHED USING #10 SELF–TAPPING TEK SCREWS WITH A MINIMUM 3–SIDE LAP CONNECTIONS PER SPAN. ALL ENDLAPS SHALL BE A MINIMUM OF 50mm UON AND SHALL OCCUR OVER SUPPORTS.

5.4 SUSPENDED CEILINGS, LIGHT FIXTURES, DUCTS, CONDUITS, PIPING OR OTHER UTILITIES SHALL NOT BE SUPPORTED BY THE STEEL ROOF DECK.

6.0 CFMRF – COLD FORM METAL ROOF FRAMING SYSTEM

6.1 CFMF SHALL BE DESIGNED BY CFMF MANUFACTURER'S ENGINEER FOR ALL LOADING PER CODE AND AS INDICATED ON THE SHEETS.

6.2 FOR WIND LOADS, SEE THE DESIGN CRITERIA ON SHEET S2.

6.3 SUBMIT VENDOR'S PUBLISHED LITERATURE, TEST DATA AND INSTALLATION INSTRUCTIONS FOR METAL STUD ASSEMBLY AND ACCESSORIES INCLUDING OTHER DATA AS MAY BE REQUIRED TO CERTIFY COMPLIANCE WITH PERFORMANCE REQUIREMENTS SPECIFIED HEREIN.

6.4 SHOP DRAWINGS AND DESIGN ANALYSIS SHALL BE STAMPED AND APPROVED BY A LICENSED PROFESSIONAL ENGINEER.

6.5 CONNECTIONS AND GAUGE SIZES ARE MINIMUM AND SHALL BE INCREASED AS NECESSARY TO PROVIDE A STRUCTURALLY ADEQUATE SYSTEM. KICKERS MAY BE ADDED TO REDUCE THE STUD HEIGHTS WHERE ACCEPTABLE AND COORDINATED WITH THE ARCHITECTURAL DRAWINGS.

6.6 CRMRF SHALL HAVE THE FOLLOWING MINIMUM PROPERTIES:

STUD/RAFTER/EAVE STRUT/BRACE/BLOCKING:
Fy = 344 MPa
GAUGE = 18
DEPTH = 152.3 mm
WIDTH = 34.8 mm
MOMENT OF INERTIA, Ix = 847x10^3 mm^4
SECTION MODULUS, Sx = 11.2x10^3 mm^3

TRACK:
Fy = 344 MPa
GAUGE = 16
DEPTH = 152.3 mm
WIDTH = 38 mm
MOMENT OF INERTIA, Ix = 1083x10^3 mm^4
SECTION MODULUS, Sx = 13.8x10^3 mm^3

PURLIN/SUBGIRT:
Fy = 393 MPa
GAUGE = 16
MOMENT OF INERTIA (TOP COMPRESSION), Ixt = 23.7x10^3 mm^4
MOMENT OF INERTIA (BOTT COMPRESSION), Ixb = 22.7x10^3 mm^4
SECTION MODULUS (TOP COMPRESSION), Sxt = 1.8x10^3 mm^3
SECTION MODULUS (BOTT COMPRESSION), Sxb = 1.7x10^3 mm^3

STRUCTURAL DESIGN CRITERIA

ALL DESIGNS SHALL CONFORM TO THE PROVISIONS OF THE IBC 2006 AS APPLICABLE

1.0 DESIGN LOADS

1.1 DEAD LOADS

1.1.1 ROOF DEAD LOADS – CONCRETE FRAMING

	MAXIMUM GRAVITY LOAD
CONC FLAT SLAB	4.80 KPa
MECH/ELEC/PLUMBING	0.15 KPa
MISC	0.05 KPa
	5.00 KPa

1.1.2 ROOF DEAD LOADS – CONVENTIONAL LIGHT FRAMING

	MAXIMUM GRAVITY LOAD	MINIMUM GRAVITY LOAD
LIGHT GAUGE FRAMING	0.20 KPa	0.15 KPa
METAL DECKING	0.14 KPa	0.05 KPa
METAL ROOFING	0.14 KPa	0.05 KPa
	0.48 KPa	0.25 KPa

1.2 LIVE LOADS (PER IBC 2006)

1.2.1 ROOF LIVE LOADS: ALL BUILDINGS

GREATER OF 1.0 KPa MINIMUM OR SNOW LOAD

1.2.2 ELEVATED FLOOR UNIFORM LIVE LOADS

OFFICE	2.40 KPa
CORRIDOR	4.80 KPa

1.2.3 SLAB–ON–GRADE LIVE LOADS

ALL BUILDINGS	4.80 KPa

1.3 SNOW LOADS (PER IBC 2006)

1.3.1 DESIGN PARAMETERS

GROUND SNOW LOAD (per UFC 3–310–01)	1.0 KPa
SNOW IMPORTANCE FACTOR	1.0
SNOW EXPOSURE FACTOR	1.0

1.4 SEISMIC LOADS (PER IBC 2006 & UFC 3–310–04)

1.4.1 SEISMIC PARAMETERS – CAST–IN–PLACE CONCRETE STRUCTURES

SEISMIC OCCUPANCY CATEGORY	II
SEISMIC IMPORTANCE FACTOR (I)	1.0
SEISMIC SITE CLASS	D
Ss	1.28
S1	0.51
Sds	0.853
Sd1	0.51
SEISMIC DESIGN CATEGORY	D
SEISMIC RESISTING SYSTEM	SPECIAL REINFORCED MASONRY SHEAR WALLS
RESPONSE MODIFICATION FACTOR (R)	5.0
RESPONSE COEFFICIENT (Cs)	0.17
SEISMIC ANALYTICAL PROCEDURE	EQUIV LATERAL FORCE
SEISMIC BASE SHEAR	649 kN

US Army Corps of Engineers
Afghanistan Engineer District

		APR
		DATE
		DESCRIPTION
		SYMBOL

DESIGNED BY:	DWN BY:	CHK BY:
DATE:	SUBMITTED BY:	FILE NO.:

STANDARD DESIGN
VARIOUS PROJECTS
VARIOUS LOCATIONS, AFGHANISTAN

LATRINE BUILDING
MEDIUM

GENERAL NOTES & DESIGN CRITERIA

SHEET REFERENCE NUMBER:
S1

STRUCTURAL DESIGN CRITERIA (CONT)

ALL DESIGNS SHALL CONFORM TO THE PROVISIONS OF THE IBC 2006 AS APPLICABLE

1.5 WIND LOADS (PER IBC 2006)

1.5.1 DESIGN PARAMETERS

BASIC WIND SPEED	137 Km/h
WIND IMPORTANCE FACTOR	1.0
WIND EXPOSURE CATEGORY	D
DIRECTIONALITY COEFFICIENT (Kd)	0.85
TOPOGRAPHIC FACTOR (Kzt)	1.0

1.5.2 DESIGN WIND PRESSURE – MAIN WINDFORCE RESISTING SYSTEM

LOCATION	CORNER ZONE WIDTH "a"	MEAN ROOF HEIGHT (h)	WINDWARD WALL (@ MEAN ROOF HEIGHT)	LEEWARD WALL (@ MEAN ROOF HEIGHT)	ROOF
FIELD ZONE	N/A	4455 mm	680 N/m^2	−480 N/m^2	−470 N/m^2
CORNER ZONE	1440mm	4455 mm	800 N/m^2	−418 N/m^2	−750 N/m^2

a = 10% OF LEAST HORIZONTAL DIMENSION OR 0.4h, WHICHEVER IS SMALLER, BUT NOT LESS THAN EITHER 4% OF LEAST HORIZONTAL DIMENSION OR 0.9M.
h = MEAN ROOF HEIGHT, IN METERS, EXCEPT THAT EAVE HEIGHT SHALL BE USED FOR ANGLE GREATER THAN 10°.

1.5.3 DESIGN WIND PRESSURE – WALL COMPONENTS AND CLADDING

EXTERIOR WALL SYSTEMS & THEIR ATTACHMENTS TO THE PRIMARY STRUCTURE SHALL BE DESIGNED FOR THE PRESSURES SHOWN IN THE DIAGRAM BELOW:

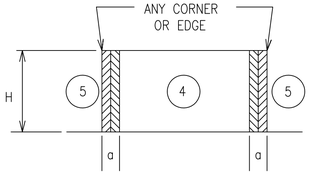

LOCATION	WINDWARD PRESSURE N/m^2 (inward)		LEEWARD PRESSURE N/m^2 (outward)		a
	④	⑤	④	⑤	
MAIN BUILDING					(mm)
AREA = 1 m^2	788	788	−850	−1050	1440
AREA = 2 m^2	748	748	−815	−967	1440
AREA = 5 m^2	700	700	−765	−880	1440
AREA = 10 m^2	648	648	−715	−750	1440

NOTES:
1. DESIGN WIND PRESSURES ABOVE REPRESENT THE NET PRESSURE (SUM OF INTERNAL AND EXTERNAL PRESSURE) APPLIED NORMAL TO ALL SURFACES.
2. LINEAR INTERPOLATION BETWEEN VALUES OF TRIBUTARY AREA IS PERMISSIBLE.
3. PLUS AND MINUS SIGNS SIGNIFY PRESSURE TOWARD AND AWAY FROM THE EXTERIOR SURFACE, RESPECTIVELY.

1.5 WIND LOADS (CONT)

1.5.4 DESIGN WIND PRESSURE – ROOF COMPONENTS AND CLADDING

ROOF COMPONENTS & THEIR ATTACHMENTS SHALL BE DESIGNED FOR THE PRESSURES SHOWN IN THE ADJACENT DIAGRAM & TABLE BELOW:

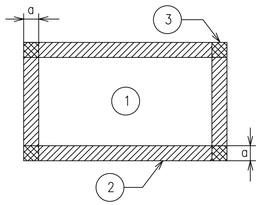

ROOF MEAN HEIGHT

LOCATION	GROSS UPLIFT PRESSURE N/m^2 (upward)			a
	①	②	③	
MAIN BUILDING				(mm)
AREA = 1 m^2	−787	−931	−1738	−1440
AREA = 2 m^2	−787	−931	−1738	−1440
AREA = 5 m^2	−787	−931	−1738	−1440
AREA = 10 m^2	−787	−931	−1738	−1440

NOTES:
1. DESIGN WIND PRESSURES ABOVE REPRESENT THE NET PRESSURE (SUM OF INTERNAL AND EXTERNAL PRESSURE) APPLIED NORMAL TO ALL SURFACES.
2. LINEAR INTERPOLATION BETWEEN VALUES OF TRIBUTARY AREA IS PERMISSIBLE.
3. PLUS AND MINUS SIGNS SIGNIFY PRESSURE TOWARD AND AWAY FROM THE EXTERIOR SURFACE, RESPECTIVELY.

2.0 FOUNDATION DESIGN CRITERIA (TO BE CONFIRMED BY THE CONTRACTOR)

THE GEOTECHNICAL ANALYSIS FOR THIS PROJECT IS THE RESPONSIBILITY OF THE CONTRACTOR AWARDED THE WORK. DESIGN VALUES USED IN THE STRUCTURAL ANALYSIS OF THE BUILDINGS HEREIN INDICATED HAVE BEEN ASSUMED AND SHALL BE CONFIRMED AND VERIFIED AS PART OF THE GEOTECHNICAL INVESTIGATION. VALUES WHICH DO NOT MEET THE REQUIREMENTS INDICATED BELOW SHALL BE IMMEDIATELY BROUGHT TO THE ATTENTION OF THE CONTRACTING OFFICER FOR CONSIDERATION AND DETERMINATION ON THE NEXT APPROPRIATE COURSE OF ACTION.

2.1.1 SOIL DESIGN PARAMETERS

NET ALLOWABLE SOIL BEARING CAPACITY	96.0 KPa
UNIT WEIGHT OF SOIL (moist)	1800 Kg/m^3
COEFF ACTIVE EARTH PRESSURE (Kpa)	0.30
COEFF PASSIVE EARTH PRESSURE (Kpp)	3.33
COEFF AT-REST EARTH PRESSURE (Kpr)	.55
COEFF OF SOIL FRICTION	.35
SUBGRADE MODULUS	4120 g/m^3
MINIMUM BEARING DEPTH BELOW GRADE	800mm
SEISMIC SITE CLASS (based on in-situ soil)	D

CONCRETE BEAM SCHEDULE

MARK	SIZE (BxH)	REINFORCING TOP	REINFORCING BOTTOM	REINFORCING STIRRUPS	REINFORCING MIDBAR	REMARKS
GRADE BEAM						
GB1	400x750	(3)−#22	(3)−#22	#13 @ 200	(1) #22 EF	TOP BAR LAP AT CENTER BOT BAR LAP PAST COL
ROOF BEAM						
RB1	400x600	(2)−#19	(2)−#19	#13 @ 250	N/A	TOP BAR LAP AT CENTER BOT BAR LAP PAST COL

NOTE:
1. DIMENSIONS NOTED ARE MILLIMETERS (mm) UON.

SPREAD FOOTING SCHEDULE

MARK	FOOTING SIZE LENGTH	FOOTING SIZE WIDTH	FOOTING SIZE THICKNESS	FOOTING REINFORCING	REMARKS
F1	2000	2000	300	(6)−#22 EW BOTT	-----

NOTES:
1. DIMENSIONS NOTED ARE MILLIMETERS (mm) UON.

CONCRETE COLUMN SCHEDULE

MARK	SIZE (LxW)	REINFORCING VERT BARS	REINFORCING TIES
C1	400x400	(8)−#25	#13 @ 100 (CORE OF EXT & CORNER COLUMNS) #13 @ 150 (CORE OF INTERIOR COLUMNS) #13 @ 200 (OTHER)

NOTE:
1. DIMENSIONS NOTED ARE MILLIMETERS (mm) UON.
2. SECOND STORY COLUMNS ARE SAME AS FIRST STORY COLUMNS.
3. CORE INDICATES THE AREA OF COLUMN & BEAM INTERSECTION.
4. TIE INDICATES PERIMETER & CROSS TIE COMBINED.

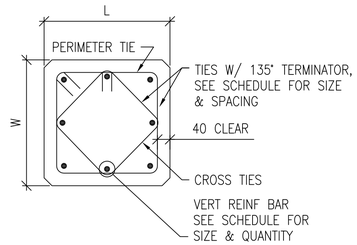

1 / S2 S2 **COLUMN DETAIL**
SCALE: 1:10

US Army Corps of Engineers
Afghanistan Engineer District

DESCRIPTION	DATE	APR

DESIGNED BY: | DATE: | SUBMITTED BY: | FILE NO.:
DWN BY: | CHK BY:

STANDARD DESIGN
VARIOUS PROJECTS
VARIOUS LOCATIONS, AFGHANISTAN

LATRINE BUILDING
MEDIUM
DESIGN CRITERIA & SCHEDULES

SHEET REFERENCE NUMBER:
S2

UNLESS OTHERWISE NOTED, LINEAR DIMENSIONS SHOWN ARE IN MILLIMETERS (MM)

0 200 400 800
SCALE: 1: 10

MINIMUM LAP SPLICES OF REINFORCING BARS IN TENSION (PER ACI 318M–05)

f'c = 28 MPa CONCRETE

BAR SIZE \ CENTER TO CENTER BAR SPACING	(---TOP BARS--) LESS THAN 4db	(---TOP BARS--) 4db OR MORE	(--OTHER BARS--) LESS THAN 4db	(--OTHER BARS--) 4db OR MORE	4db
#10	460	460	410	410	40
#13	660	610	510	480	50
#16	1020	760	790	580	60
#19	1450	910	1120	710	80
#22	1960	1090	1500	840	90
#25	2590	1450	1980	1120	100
#29	3280	1830	2510	1420	110
#32	4140	2340	3200	1780	130
#36	5080	2840	3910	2180	140

NOTES:

1. LAP SPLICES ABOVE ARE IN MILLIMETERS UON.
2. YIELD STRENGTH OF REINFORCEMENT, fy, IS 400MPa (LAP SPLICE LENGTH IS IN MILLIMETERS).
3. CONCRETE IS NORMAL WEIGHT (2400Kg/m^3).
4. TOP BAR INDICATES HORIZONTAL REINFORCEMENT WHICH IS PLACED ABOVE 300mm OR MORE OF FRESH CONCRETE.
5. SEE COLUMN SCHEDULE FOR COLUMN AND SHEAR WALL VERTICAL LAP SPLICE.
6. STRAIGHT DEVELOPMENT LENGTH OF AN UNLAPPED BAR IS EQUAL TO VALUE FROM TABLE DIVIDED BY 1.3.
7. CATEGORY FOR BARS SPACED LESS THAN 4d, OR ON CENTER CORRESPONDS TO CATEGORY 1 IN THE CRSI HANDBOOK WHEREAS FOR BARS SPACED 4d, OR MORE ON CENTER CORRESPOND TO CRSI CATEGORY 5.

CONCRETE COVER SCHEDULE

MINIMUM CONCRETE COVER PROTECTION FOR REINFORCEMENT BARS SHALL BE AS FOLLOWS: (SEE ACI 318M–05, SECTION 7.7 FOR CONDITIONS NOT NOTED). DIMENSIONS FOR BAR PLACEMENT GIVEN IN SECTIONS AND DETAILS SHALL SUPERSEDE MINIMUM COVER REQUIREMENTS GIVEN HERE. DIMENSIONS ARE IN mm.

FOOTINGS (EARTH FORMED)		70
COLUMNS / PIERS (TO TIES)		40
GRADE BEAMS OR SLAB TURNED DOWN EDGES:		
TOP		40
BOTTOM (EARTH FORMED)		70
SIDES (EARTH FORMED)		70
SIDES (BOARD FORMED)	#16 BAR & SMALLER	40
	#19 THRU #36 BAR	50
ELEVATED BEAMS & SLABS:		
BEAM TIES & STIRRUPS (NOT EXPOSED TO WEATHER)		40
BEAM TIES & STIRRUPS (EXPOSED TO WEATHER)		50
FLOOR SLABS (NOT EXPOSED TO WEATHER)		20
FLOOR SLABS (EXPOSED TO WEATHER)		
#19 & LARGER		50
#13 & SMALLER		40
ROOF SLAB BARS		25
SLABS–ON–GRADE (NO EXPOSURE TO WEATHER) FROM TOP		20
SLABS–ON–GRADE (EXPOSURE TO WEATHER) FROM TOP		40
UTILITY TUNNEL WALLS, RETAINING WALLS AND SHEAR WALLS, (NO SURFACES SHALL BE EARTH FORMED) EARTH SIDE AND FRONT SIDE (EXPOSED TO WEATHER):		
#16 BAR AND SMALLER		40
#19 THRU #36 BAR		50

PROVIDE STANDARD BAR CHAIRS AND SPACERS AS REQUIRED TO MAINTAIN CONCRETE PROTECTION SPECIFIED.

MASONRY CONCRETE LINTEL SCHEDULE

OPENING TYPE OR SIZE, BEAM LOCATION OR TYPE	MAX SPAN (mm)	BEAM DEPTH (mm)	MAIN REINFORCING TOP	MAIN REINFORCING BOTTOM	MAIN REINFORCING OTHER	SHEAR REINF STIRRUPS
EXT WINDOW OR DOOR	900	400	(2)–#13	(2)–#13		----
EXT WALL OPENING, 1–STORY BLDG	1800	400	(2)–#13	(2)–#13		----
EXT WALL OPENING, 1–STORY BLDG	900	200		(2)–#13		----
INT WALL OPENING, NON–BEARING	2400	400		(2)–#13		----
INT WALL OPENING, NON–BEARING	1800	400		(2)–#13		----
INT WALL OPENING, NON–BEARING	900	200		(2)–#13		----

1. STRUCTURAL DRAWINGS DO NOT INDICATE ALL OPENINGS IN MASONRY WALLS. VERIFY NUMBER, SIZE AND LOCATION OF ALL OPENINGS IN MASONRY WALLS FROM ARCHITECTURAL SHEETS AND APPROVED PLUMBING, MECHANICAL, AND ELECTRICAL SHOP DRAWINGS.
2. PROVIDE 200 BEARING EA END FOR 200 DEEP CIPL PROVIDE 400 BEARING EA END FOR 400 DEEP CIPL.
3. FOR HEAD DETAILS REFER TO ARCHITECTURAL SHEETS.
4. REINFORCING SHALL BE ASTM A615M, GRADE 400. CONCRETE FOR CAST–IN–PLACE BEAMS SHALL HAVE A MINIMUM COMPRESSIVE STRENGTH OF 21 MPa AT 28 DAYS.
5. CONTRACTOR SHALL SUBMIT FOR APPROVAL SHOP DRAWINGS AND SCHEDULES SHOWING SIZE, DETAILS, LOCATIONS, ETC FOR ALL CAST–IN–PLACE BEAMS IN CMU WALLS.

TYPICAL CMU WALL REINFORCING SCHEDULE

WALL TYPE OR LOCATION	WALL THICKNESS (mm)	CONT VERT REINF (CENTERED IN CMU, UON)	CONT CAST IN PLACE LINTEL (CIP BB) DEPTH (mm)	REINF (BOTT UON)	MAX BOND BEAM VERT SPACING (mm)	REMARKS
ALL PERIMETER/EXTERIOR WALLS (UON)	200	1–#16 @ 800	200	2–#16	1200	-----
NON–LOAD BEARING INTERIOR WALLS WITH TOP AND BOTT SUPPORTS	200	1–#13 @ 1200	200	2–#16	1200	-----

NOTES:
1. REINFORCING SIZES AND SPACING GIVEN IN SECTIONS AND DETAILS SHALL SUPERSEDE THE ABOVE SCHEDULE REQUIREMENTS.
2. PROVIDE CONTINUOUS CAST IN PLACE CONCRETE BOND BEAM AT ALL WALL LATERAL SUPPORT LOCATIONS.
3. REINFORCING INDICATED SHALL BE CONTINUOUS FOR FULL EXTENT OF SPLICE FOLLOWING THE REQUIREMENTS OF THE LAP SPLICE TABLE SHOWN ON THIS SHEET.
4. WALLS HAVE BEEN DESIGNATED AS VERTICALLY SPANNING UON AND THEREFORE MUST BE TEMPORARILY SUPPORTED DURING CONSTRUCTION UNTIL THE SUPPORTING DIAPHRAGMS (FLOOR AND ROOF SYSTEMS) HAVE BEEN COMPLETELY INSTALLED. SHORING IS THE RESPONSIBILITY OF THE CONTRACTOR.
5. ALL CMU WALLS SHALL BE FULLY GROUTED IN LIFTS NOT EXCEEDING THOSE BY CODE (UON)
6. SEE TYPICAL CMU WALL DETAILS ON SHEET S8.

CONCRETE MATERIALS SCHEDULE

STRUCTURAL ELEMENT	f'c CONCRETE COMPRESSIVE STRENGTH @ 28 DAYS (MPa)
SLAB–ON–GRADE/TURN–DOWN SLABS	28
ROOF AND FLOOR SLABS	28
ALL FOOTINGS (UON)	28
MISC. CURBS, WALLS AND PADS UON	28
CAST–IN–PLACE LINTEL	28
CONCRETE FRAMING – BEAMS AND COLUMNS	28

NOTES:
1. ALL CONCRETE SHALL BE NORMAL WEIGHT CONCRETE (2400 Kg/m^3 UON)
2. ALL CONCRETE SHALL HAVE A MAX WATER–CEMENT RATIO OF 0.45.

STANDARD HOOKS IN TENSION PER (ACI 318M–05)

HOOK DEVELOPMENT LENGTH Ldh (mm)

BAR SIZE	f'c 28 MPa
#10	180
#13	250
#16	300
#19	380
#22	430
#25	480
#29	560
#32	610
#36	690

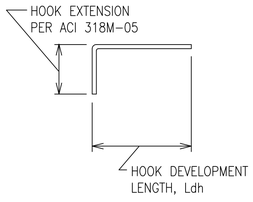

NOTES:
1. CONCRETE IS NORMAL WEIGHT CONCRETE.
2. BAR YIELD STRENGTH, fy = 400 MPa
3. SIDE COVER REQUIREMENTS OF ACI SECT. 12.5.3 ARE ASSUMED TO NOT BE MET.
4. TIE OR STIRRUP REQUIREMENTS OF ACI SECT. 12.5.3 ARE ASSUMED TO NOT BE MET.
5. REDUCTION FOR EXCESS REINFORCEMENT IS NOT TAKEN.
6. HOOK DEVELOPMENT LENGTH IS VALID FOR 180° HOOKS ALSO.

MASONRY REINFORCING MINIMUM LAP SPLICES

BAR SIZE	BASIC LAP SPLICE Ld FOR CMU REINFORCING
#10	450
#13	600
#16	750
#19	900
#22	1050
#25	1200

MAXIMUM CMU WALL UNSUPPORTED HEIGHT OR LENGTH

	WALL THICKNESS (mm)	EXTERIOR WALL NON–LOAD BEARING (mm)	INTERIOR NON–LOAD BEARING WALL (mm)
MAX HEIGHT OR LENGTH BETWEEN SUPPORTS	200	4800	7200

NOTE: CMU WALL MAXIMUM LATERAL SUPPORT SPACING GIVEN IN SECTIONS AND DETAILS SHALL SUPERSEDE THE ABOVE SCHEDULE REQUIREMENTS.

US Army Corps of Engineers
Afghanistan Engineer District

SYMBOL	DESCRIPTION	DATE	APR

DESIGNED BY: | DATE:
DWN BY: | SUBMITTED BY:
CHK BY: | FILE NO.:

STANDARD DESIGN
VARIOUS PROJECTS
VARIOUS LOCATIONS, AFGHANISTAN

LATRINE BUILDING
MEDIUM

SCHEDULES

SHEET REFERENCE NUMBER:
S3

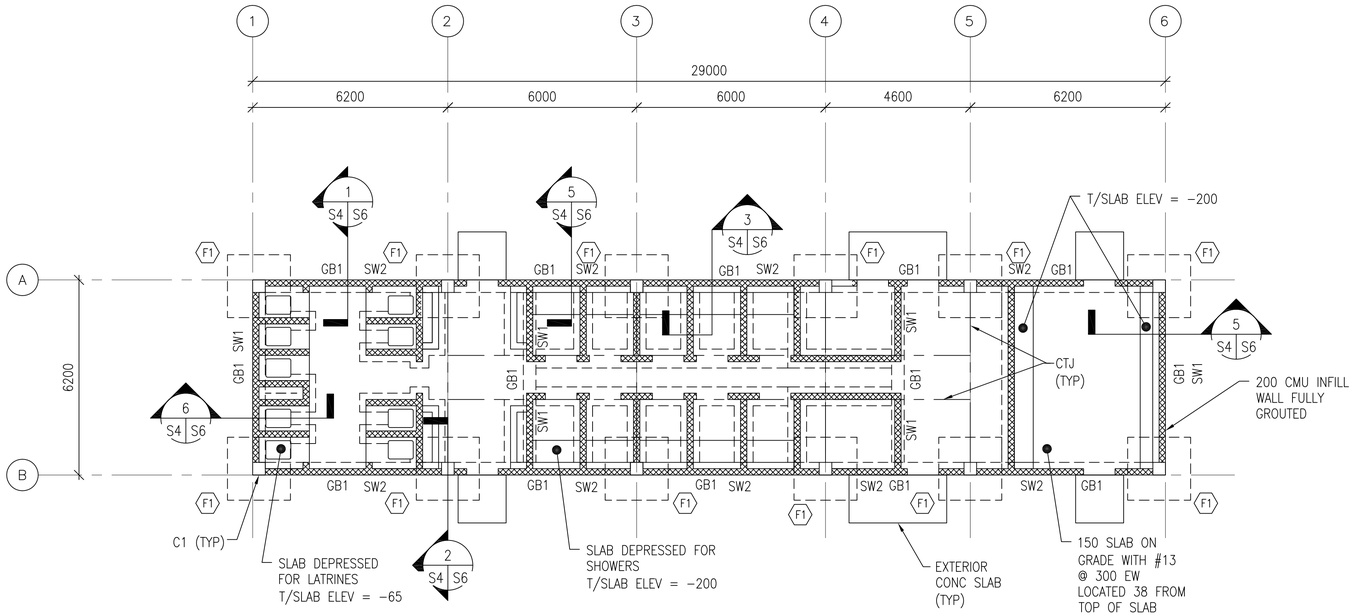

1 S4 S4 FOUNDATION PLAN

SCALE: 1:100

N

PLAN NOTES:

1. FINISH FIRST FLOOR ELEVATION SHALL BE (DATUM 0.0). ALL PLUS OR MINUS DIMENSIONS INDICATED ON PLAN OR REFERRED TO IN NOTES RELATE TO FINISH FIRST FLOOR ELEVATION.
2. TOP OF FOOTINGS SHALL BE −950 UNLESS OTHERWISE INDICATED.
3. SPREAD FOOTINGS INDICATED BY F# ON PLAN. REFER TO SPREAD FOOTING SCHEDULE ON SHEET S2.
4. COLUMNS INDICATED THUS C# ON PLAN. REFER TO COLUMN SCHEDULE ON SHEET S2.
5. REFER TO SHEETS S1 TO S3 FOR STRUCTURAL NOTES AND BASIS OF DESIGN.
6. CTJ & CSJ INDICATES SLAB CONTROL OR CONSTRUCTION JOINTS. RESPECTIVELY, REFER TO SHEET S8 FOR DETAILS.
7. SEE CMU WALL REINFORCING SCHEDULE ON SHEET S3.
8. REFER TO ARCHITECTURAL SHEETS FOR MASONRY PARTITION TYPES.
9. SEE MECHANICAL AND ELECTRICAL SHEET FOR CONCRETE PAD LOCATIONS, SIZES, AND THICKNESS NOT SHOWN. SEE SHEET S8 FOR DETAILS.

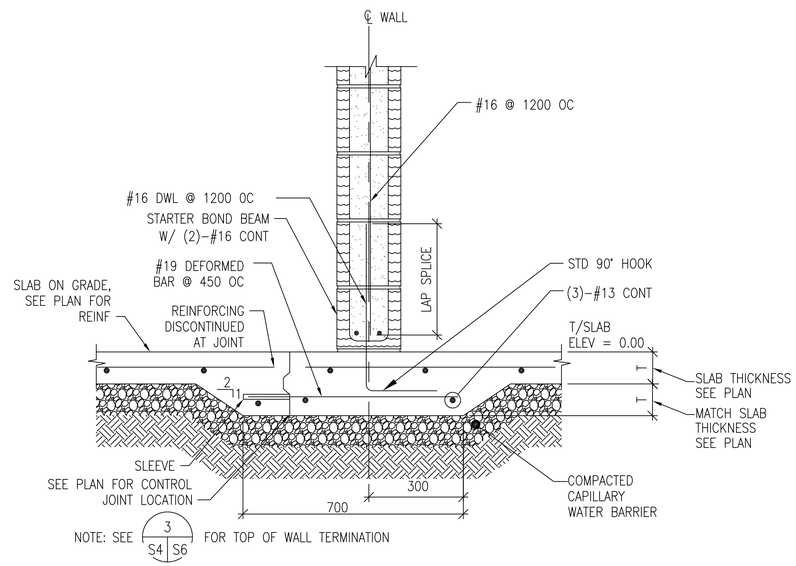

TYPICAL CONTROL JOINT AT WALL SECTION

SCALE: 1:10

UNLESS OTHERWISE NOTED, LINEAR DIMENSIONS SHOWN ARE IN MILLIMETERS (MM)

0 2000 4000 8000

SCALE: 1: 100

US Army Corps of Engineers

Afghanistan Engineer District

APR	DATE	DESCRIPTION	SYMBOL

DESIGNED BY: | DATE:
DWN BY: | SUBMITTED BY:
CHK BY: | FILE NO.:

STANDARD DESIGN
VARIOUS PROJECTS
VARIOUS LOCATIONS, AFGHANISTAN

LATRINE BUILDING
MEDIUM
FOUNDATION PLAN

SHEET REFERENCE NUMBER:

S4

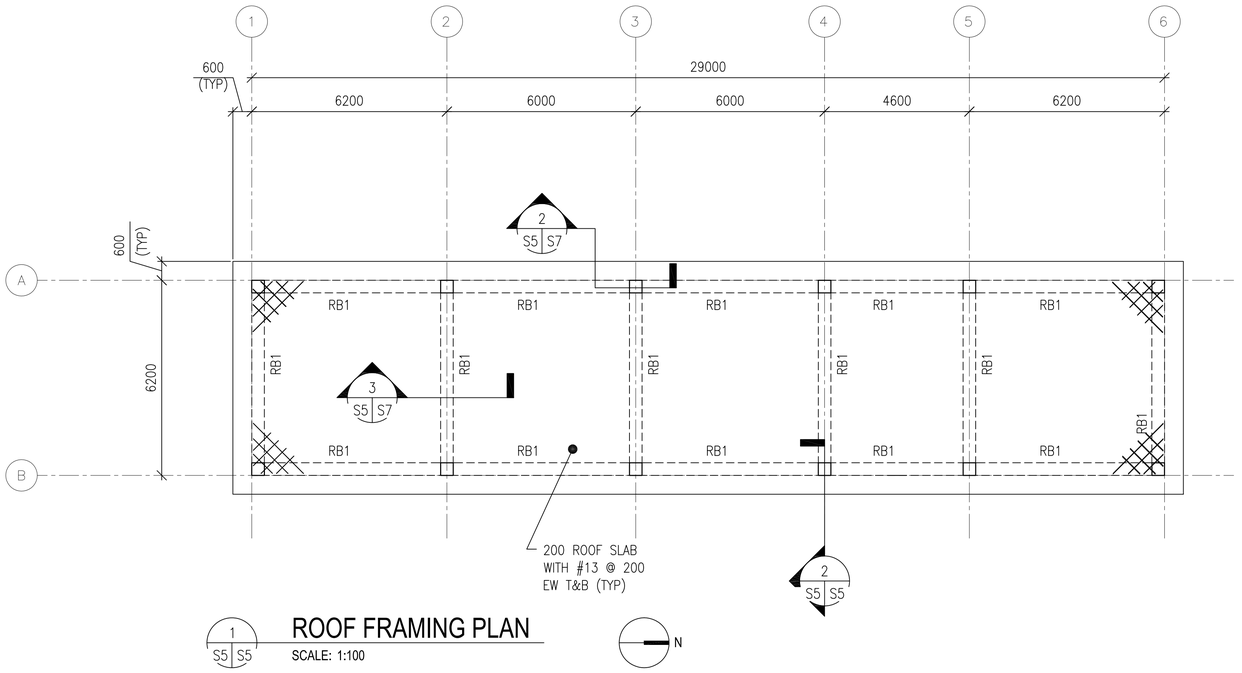

1 S5 S5 **ROOF FRAMING PLAN**

SCALE: 1:100

PLAN NOTES:

1. TOP OF SLAB ELEVATION = 3600 UNLESS NOTED OTHERWISE
2. RB# DENOTES ROOF BEAM TYPE. SEE BEAM SCHEDULE ON SHEET S2.
3. REFER TO SHEETS S1 TO S3 FOR STRUCTURAL NOTES AND BASIS OF DESIGN.
4. COORDINATE W/ ARCHITECTURAL SHEETS FOR COLD-FORMED STEEL OVERBUILT FRAMING ABOVE ROOF SLAB.
5. COLD-FORMED METAL OVERBUILT ROOF FRAMING NOT SHOWN FOR CLARITY. SEE OVERBUILT ROOF FRAMING DETAILS AND SECTIONS ON SHEET S7.

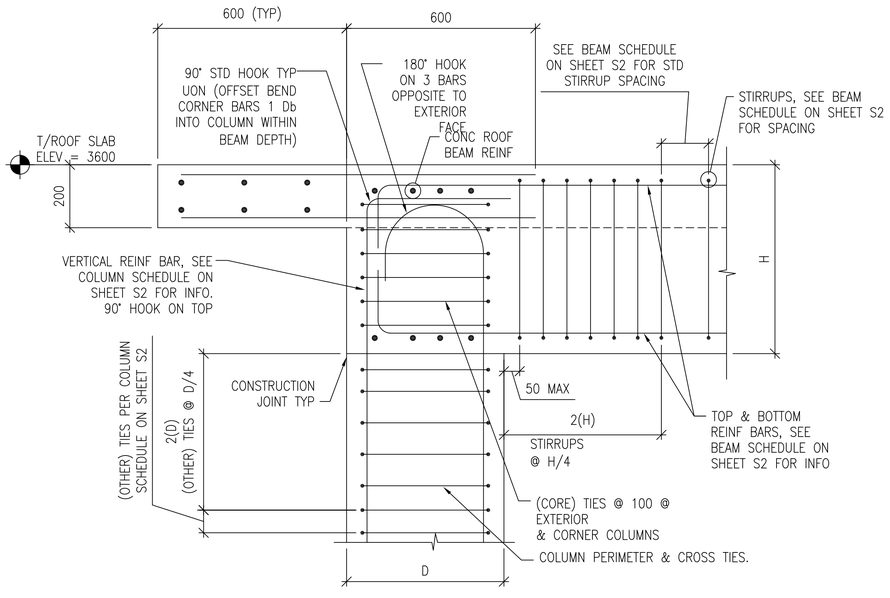

2 S5 S5 **SECTION**

SCALE: 1:10

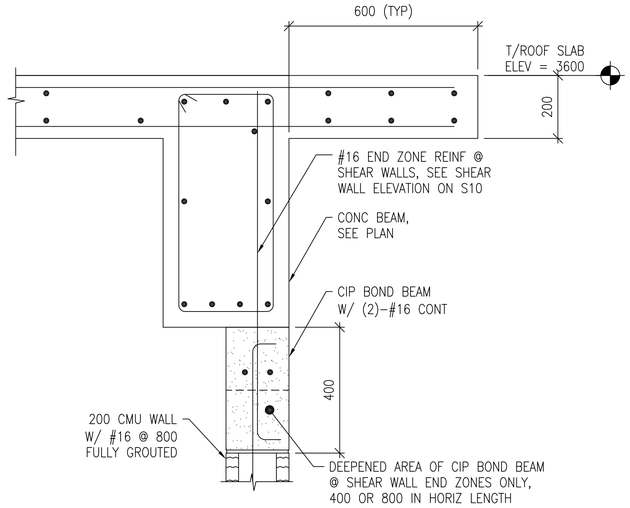

3 S8 S5 **TYP SHEAR WALL END ZONE SECTION**

SCALE: 1:10

UNLESS OTHERWISE NOTED, LINEAR DIMENSIONS SHOWN ARE IN MILLIMETERS (MM)

0 200 400 800

SCALE: 1: 10

0 2000 4000 8000

SCALE: 1: 100

US Army Corps of Engineers

Afghanistan Engineer District

SYMBOL	DESCRIPTION	DATE	APR

DESIGNED BY: | DATE: | SUBMITTED BY: | FILE NO.:

DWN BY: | CHK BY:

STANDARD DESIGN
VARIOUS PROJECTS
VARIOUS LOCATIONS, AFGHANISTAN

LATRINE BUILDING
MEDIUM
ROOF FRAMING PLAN

SHEET REFERENCE NUMBER:

S5

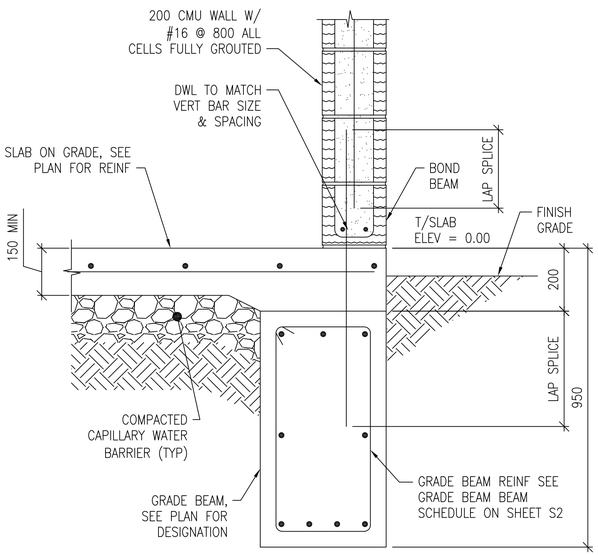

1 S4 S6 **SECTION**

SCALE: 1:10

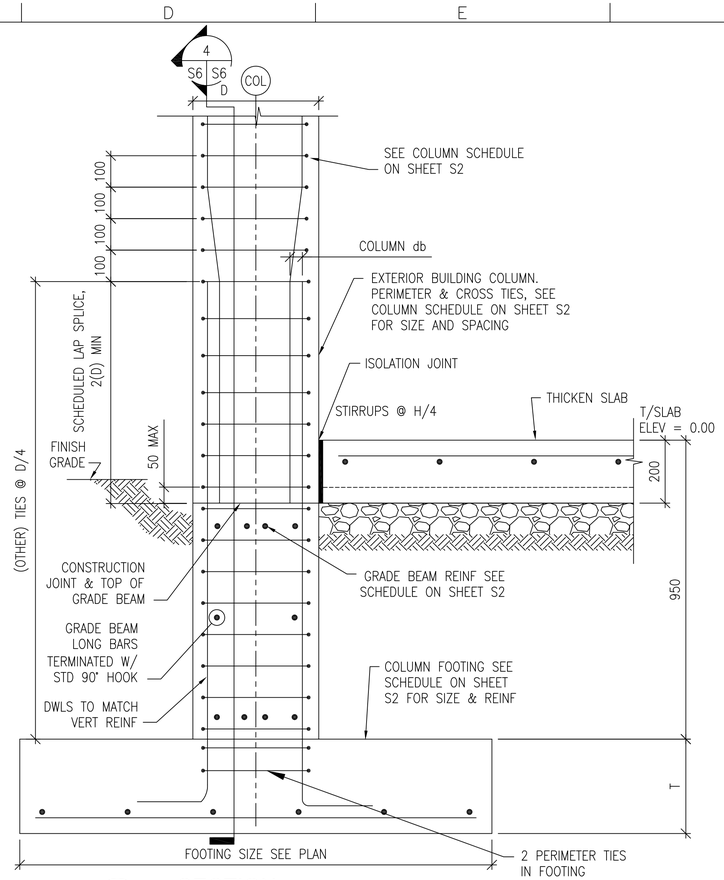

2 S4 S6 **SECTION**

SCALE: 1:10

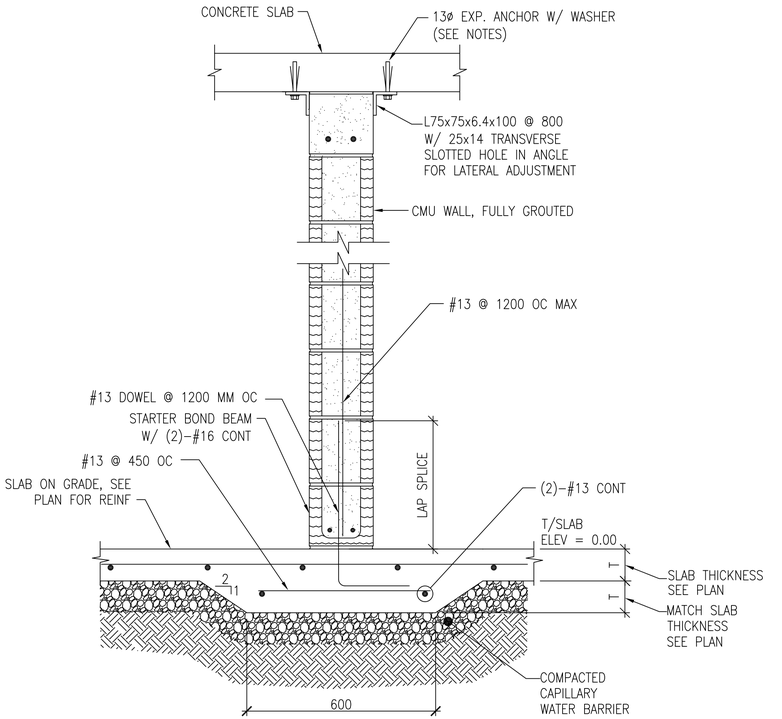

NOTES:

1. SEE SHEETS S3 AND S8 FOR CMU WALL REINFORCING.
2. EMBED EXPANSION ANCHOR 82 MINIMUM INTO SOLID CONCRETE.
3. INSTALL 13 MM ISOLATION JOINT VERTICALLY AT WALL ENDS THAT ARE ADJACENT TO CONCRETE COLUMNS.
4. USE STEEL WASHER BETWEEN ANCHOR HEAD AND ANGLE. NOMINAL WASHER INSIDE AND OUTSIDE DIAMETER TO BE 14 & 35 RESPECTIVELY.

3 S4 S6 **SECTION**

SCALE: 1:10

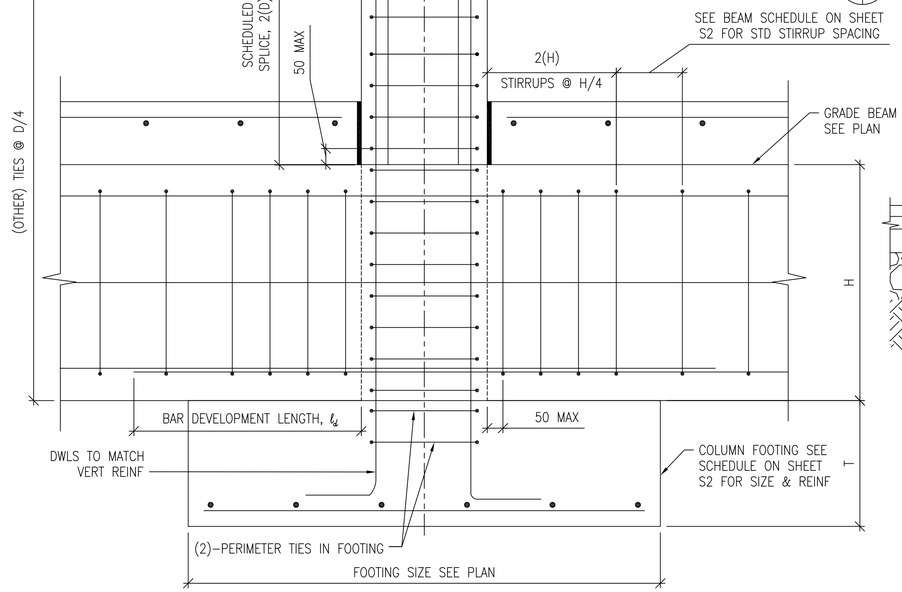

4 S6 S6 **SECTION**

SCALE: 1:10

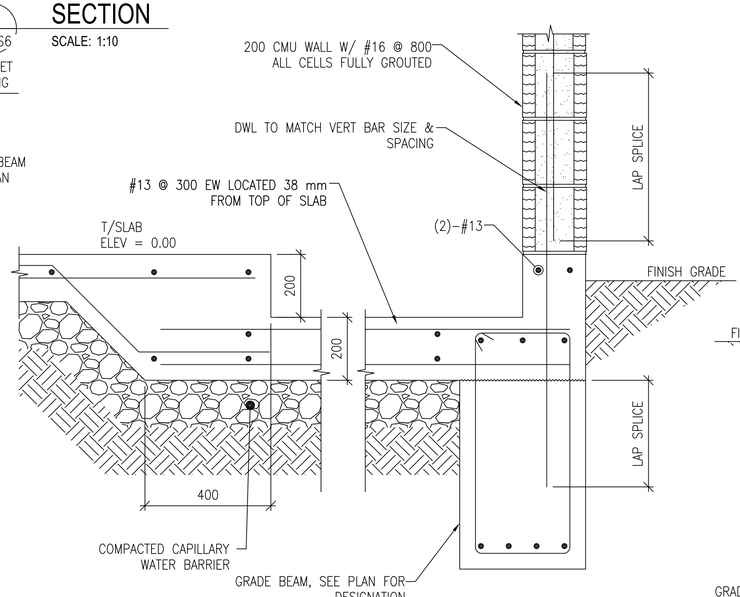

5 S4 S6 **SECTION**

SCALE: 1:10

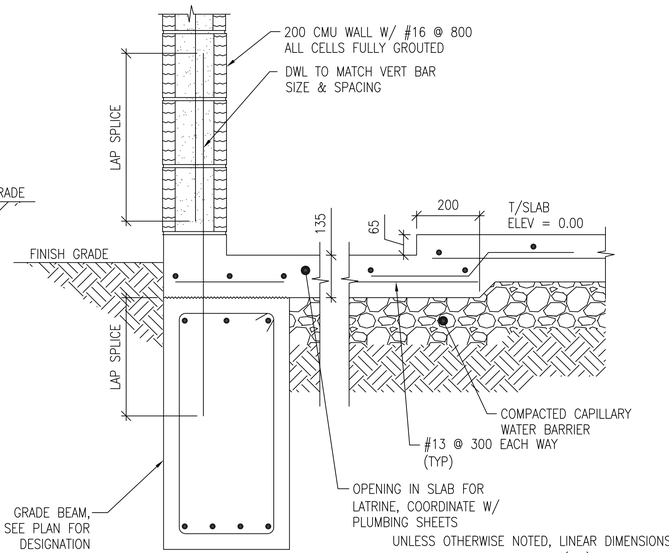

6 S4 S6 **SECTION**

SCALE: 1:10

UNLESS OTHERWISE NOTED, LINEAR DIMENSIONS SHOWN ARE IN MILLIMETERS (MM)

0 200 400 800

SCALE: 1: 10

US Army Corps of Engineers

Afghanistan Engineer District

SYMBOL	DESCRIPTION	DATE	APP

DESIGNED BY: | DATE: | SUBMITTED BY: | FILE NO.:

DWN BY: | CHK BY:

STANDARD DESIGN
VARIOUS PROJECTS
VARIOUS LOCATIONS, AFGHANISTAN

LATRINE BUILDING
MEDIUM

FOUNDATION SECTIONS & DETAILS

SHEET REFERENCE NUMBER:

S6

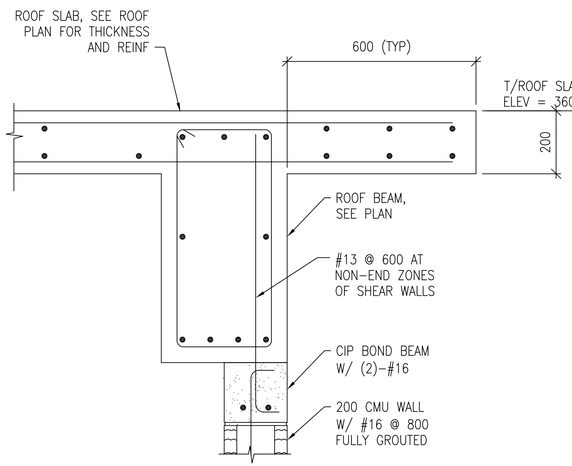

NOTES:
1. REFERENCE THIS SHEETS FOR OVERFRAMING ABOVE ROOF SLAB.

1 S8 S7 **SECTION**
SCALE: 1:10

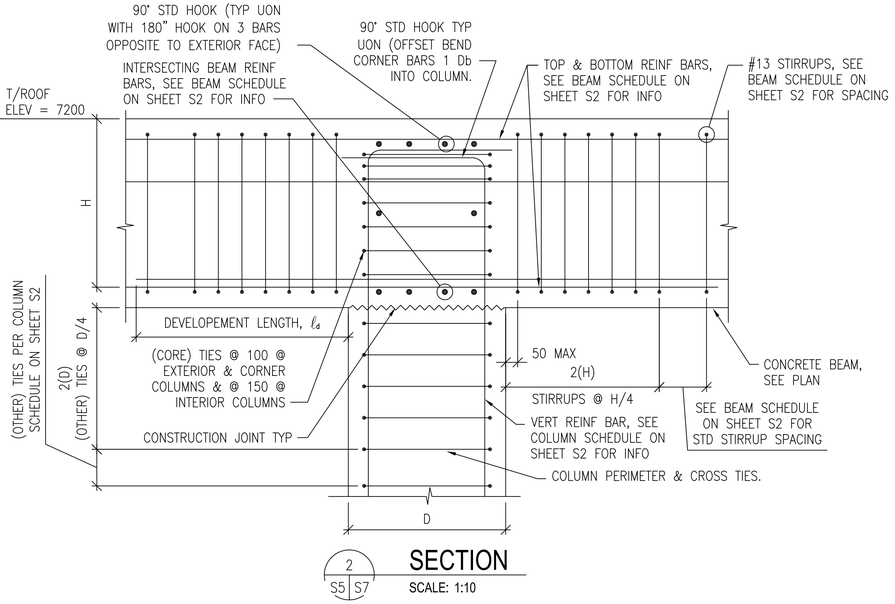

2 S5 S7 **SECTION**
SCALE: 1:10

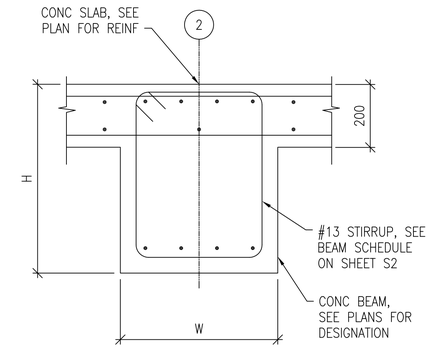

3 S5 S7 **SECTION**
SCALE: 1:10

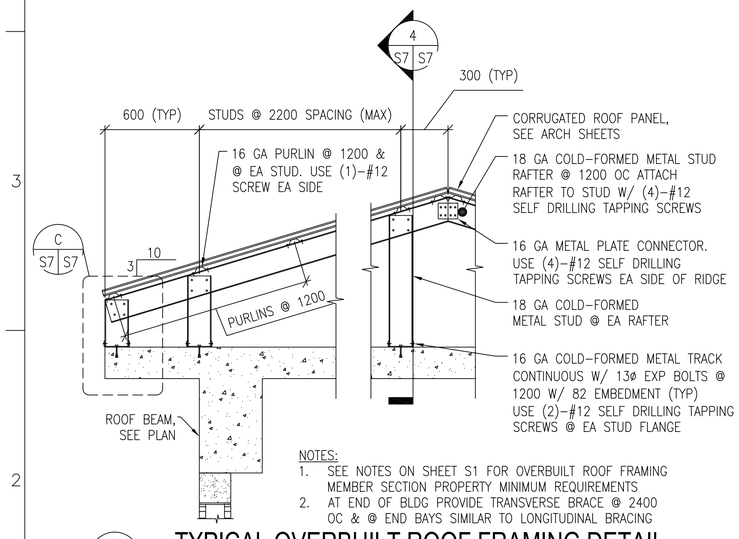

NOTES:
1. SEE NOTES ON SHEET S1 FOR OVERBUILT ROOF FRAMING MEMBER SECTION PROPERTY MINIMUM REQUIREMENTS
2. AT END OF BLDG PROVIDE TRANSVERSE BRACE @ 2400 OC & @ END BAYS SIMILAR TO LONGITUDINAL BRACING

A S7 S7 **TYPICAL OVERBUILT ROOF FRAMING DETAIL**
SCALE: 1:20

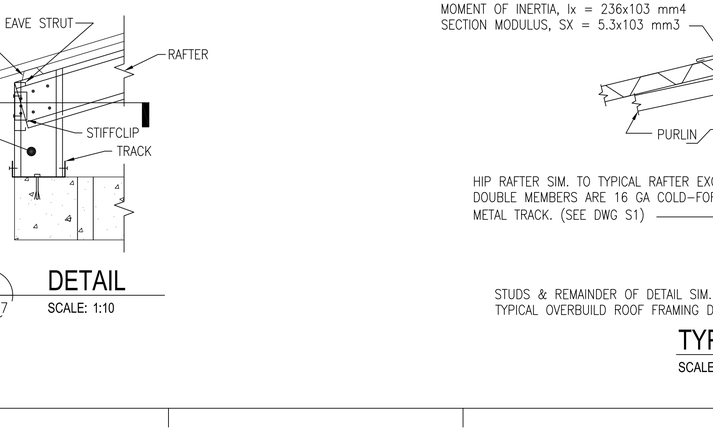

4 S7 S7 **SECTION**
SCALE: NTS

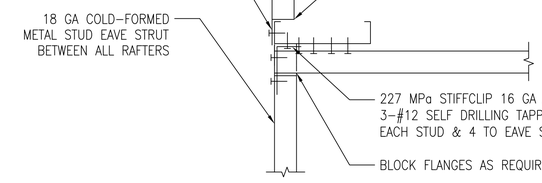

5 S7 S7 **SECTION**
SCALE: 1:5

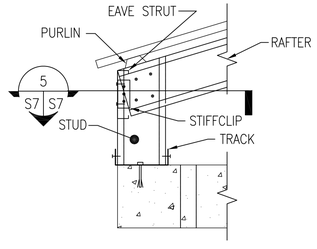

C S7 S7 **DETAIL**
SCALE: 1:10

DOUBLE LEDGE MEMBERS ARE 18 GA COLD-FORMED METAL TRACK.
FY = 344 MPa
DEPTH = 88.9mm
WIDTH = 34.8mm
MOMENT OF INERTIA, Ix = 236x103 mm4
SECTION MODULUS, SX = 5.3x103 mm3

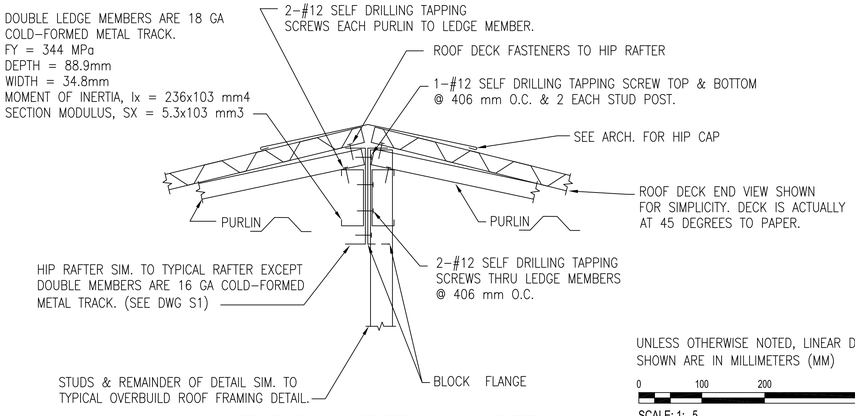

TYPICAL HIP FRAMING DETAIL
SCALE: 1:5

B S7 S7 **TYPICAL ROOF BRACE LAYOUT DETAIL**
SCALE: NTS

UNLESS OTHERWISE NOTED, LINEAR DIMENSIONS SHOWN ARE IN MILLIMETERS (MM)

0 100 200 400
SCALE: 1: 5

0 200 400 800
SCALE: 1: 10

US Army Corps of Engineers
Afghanistan Engineer District

SYMBOL	DESCRIPTION	DATE	APR

DESIGNED BY: | DATE: | SUBMITTED BY: | FILE NO.:
DWN BY: | CHK BY:

STANDARD DESIGN
VARIOUS PROJECTS
VARIOUS LOCATIONS, AFGHANISTAN

LATRINE BUILDING
MEDIUM
SECTIONS & DETAILS

SHEET REFERENCE NUMBER:
S7

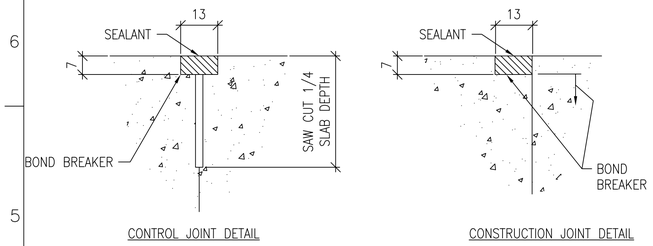

CONTROL JOINT DETAIL

CONSTRUCTION JOINT DETAIL

1 S8 TYPICAL CONCRETE SLAB JOINT FINISH DETAIL

SCALE: NTS

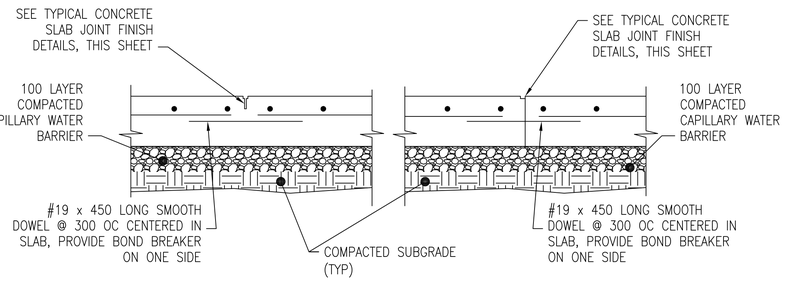

CONTROL JOINT DETAIL (CTJ)

CONSTRUCTION JOINT DETAIL (CSJ)

2 S8 TYPICAL SLAB ON GRADE JOINT DETAILS

SCALE: NTS

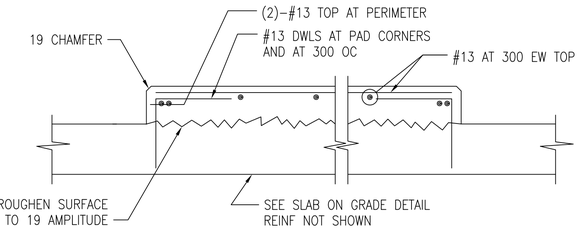

3 S8 INTERIOR EQUIPMENT PAD DETAIL

SCALE: NTS

DETAIL NOTE:
1. COORDINATE EQUIPMENT PAD SIZE AND LOCATIONS W/ ELECTRICAL/MECHANICAL DRAWINGS AND EQUIPMENT MANUFACTURER.

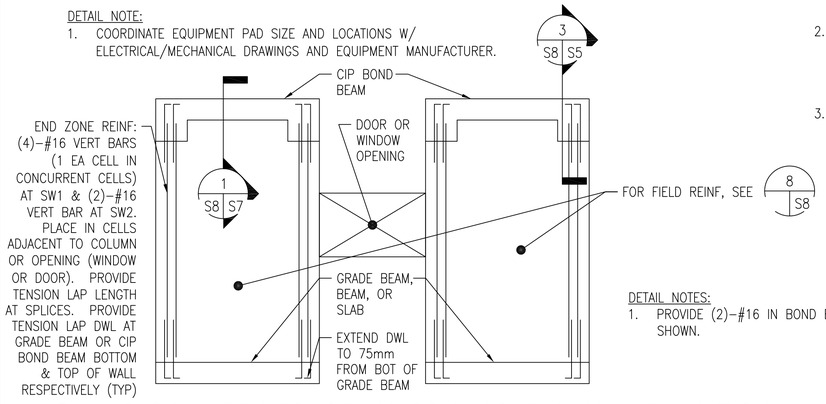

4 S8 SPECIAL REINFORCED MASONRY SHEAR WALL ELEVATION

SCALE: NTS

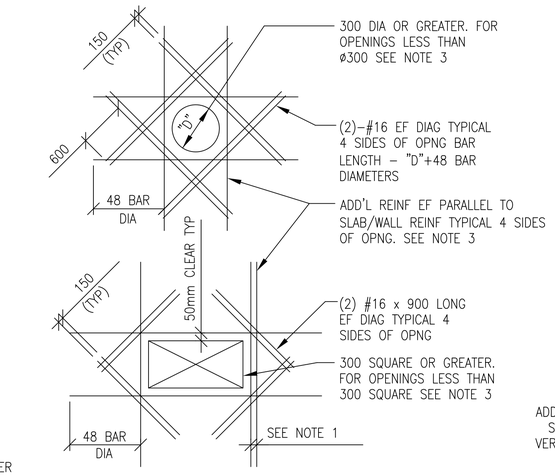

SLAB OPENINGS

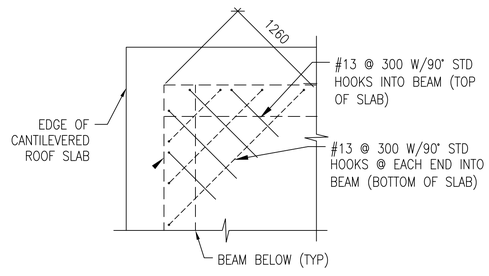

ELEVATED SLAB CORNERS

5 S8 ADD'L REINFORCEMENT DETAILS

SCALE: NTS

DETAIL NOTES:
1. WHERE MORE THAN ONE ADDITIONAL BAR IS REQUIRED PARALLEL TO THE EXISTING SLAB/WALL REINFORCING THE ADDITIONAL REINFORCING BARS SHALL BE SPACED AT 100 ON CENTER.
2. ADDITIONAL REINFORCING PARALLEL TO THE SLAB/WALL REINFORCING SHALL BE #16 BARS THAT PROVIDE A STEEL AREA ON EACH SIDE OF THE OPENING EQUAL TO 1/2 THE AREA OF THE REINFORCING CUT BY THE OPENING.
3. FOR OPENINGS WITH SIDES OR DIAMETERS LESS THAN 300 SPREAD THE SLAB/WALL REINFORCING TO CLEAR THE OPENING.

DETAIL NOTES:
1. PROVIDE (2)–#16 IN BOND BEAMS AT 1200 OC, NOT SHOWN.

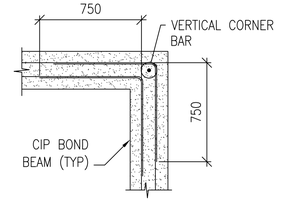

BOND BEAM CORNER

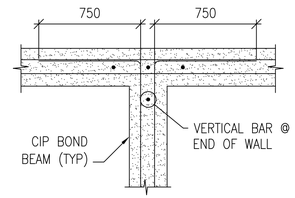

BOND BEAM INTERSECTION

6 S8 CIP BOND BEAM DETAILS

SCALE: NTS

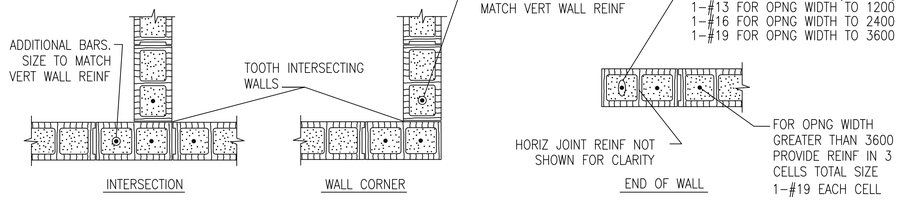

INTERSECTION

WALL CORNER

END OF WALL

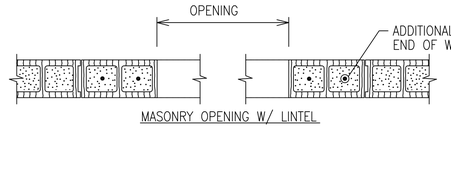

MASONRY OPENING W/ LINTEL

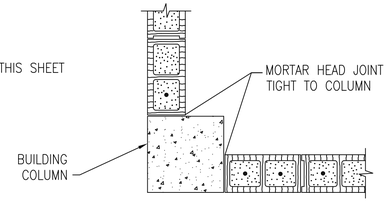

WALL END AT COLUMN

NOTES:
1. OPENING WIDTH SHALL NOT EXCEED 3600 FOR THIS TYPE OF JAMB
2. ALL CELLS FULLY GROUTED

7 S8 TYPICAL CMU DETAILS

SCALE: NTS

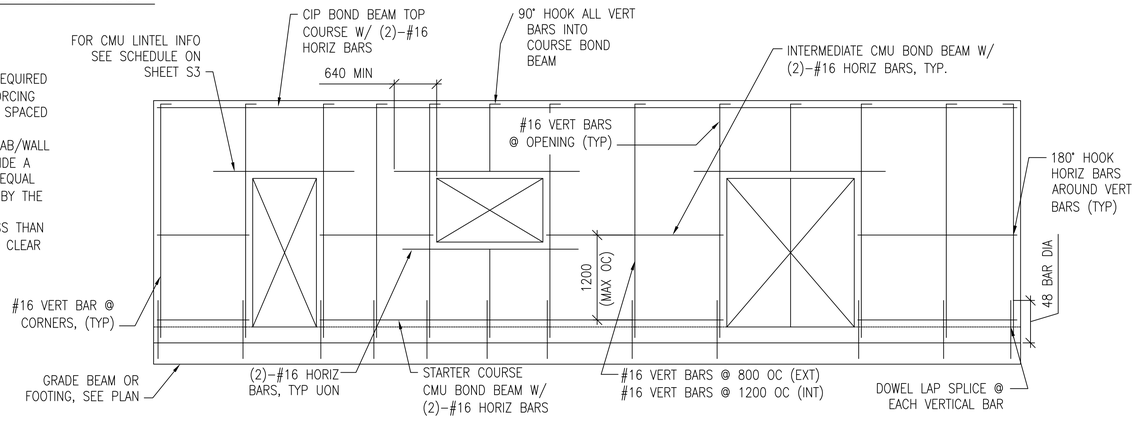

8 S8 MIN CMU WALL REINFORCING

SCALE: NTS

LINTEL NOTES:
MASONRY LINTEL REINFORCEMENT AS PER SCHEDULE ON SHEET S3

UNLESS OTHERWISE NOTED, LINEAR DIMENSIONS SHOWN ARE IN MILLIMETERS (MM)

US Army Corps of Engineers
Afghanistan Engineer District

DESCRIPTION	DATE	APR

DESIGNED BY: | DATE: | SUBMITTED BY: | FILE NO.:
DWN BY: | CHK BY:

STANDARD DESIGN
VARIOUS PROJECTS
VARIOUS LOCATIONS, AFGHANISTAN

LATRINE BUILDING
MEDIUM
TYPICAL DETAILS

SHEET REFERENCE NUMBER:
S8

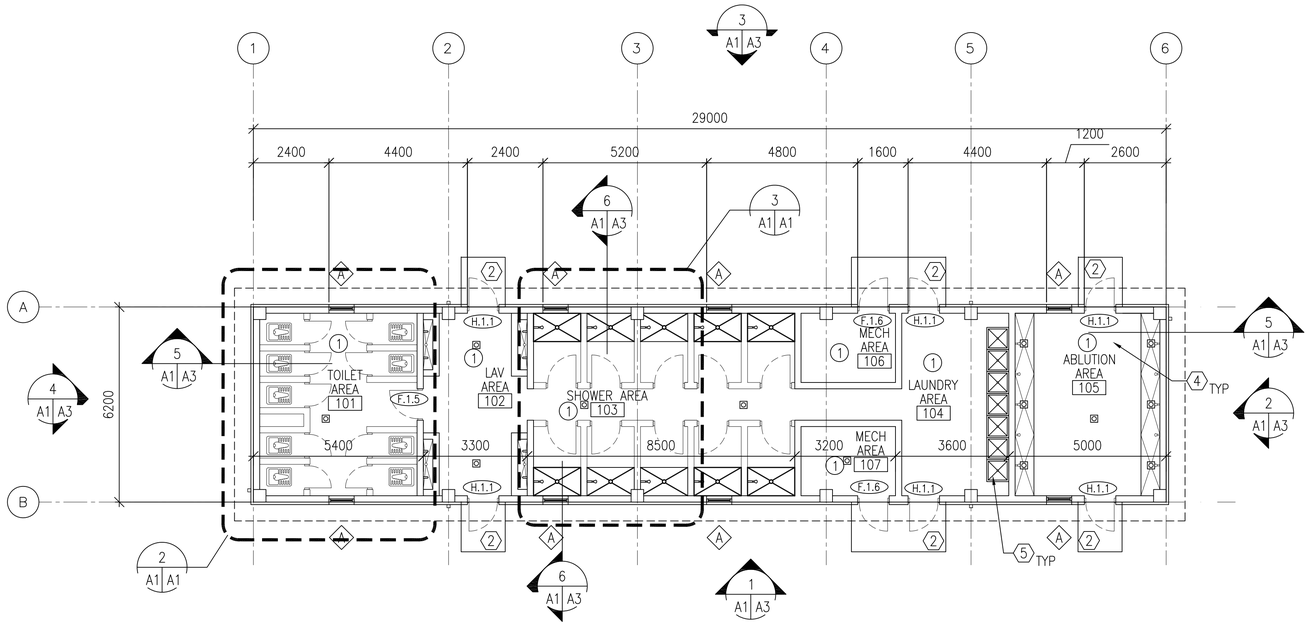

1 A1 A1 **FLOOR PLAN**
SCALE: 1:100
179.8 GSM

N

GENERAL NOTES:

A. INTERIOR PARTITIONS SHALL BE 200 MM CMU UNLESS NOTED OTHERWISE.
B. SURFACES TO BE PAINTED SHALL BE CLEAN AND FREE OF FOREIGN MATTER BEFORE APPLICATION OF PAINT. CLEANING SHALL BE SCHEDULED SO THAT DUST AND OTHER CONTAMINANTS WILL NOT FALL ON WET, NEWLY PAINTED SURFACES.
C. CONCRETE AND INTERIOR MASONRY SURFACES GROUTED SOLID SHALL BE ALLOWED TO DRY AT LEAST 30 DAYS BEFORE PAINTING EXCEPT CONCRETE SLAB ON GRADE WHICH SHALL BE ALLOWED TO CURE 90 DAYS BEFORE PAINTING.
D. PAINTS CONTAINING LEAD IN EXCESS OF 0.06 PERCENT BY WEIGHT OF THE TOTAL NONVOLATILE CONTENT SHALL NOT BE USED.
E. MERCURIAL FUNGICIDES SHALL NOT BE USED IN OIL–BASE PAINT.
F. REMOVE LOOSE DIRT AND CLEAN SURFACES BEFORE PAINTING. APPLY PAINT TO INTERIOR STRUCTURAL RIGID FRAMINGS AND CEILINGS AND TEST FOR ADHESION. PRIMER COAT FOR MASONRY. INITIAL FIRST COAT WITH AN ACRYLIC LATEX PAINT FOR EXTERIOR SURFACES AND A SECOND COAT WITH A WATER REPELLENT ACRYLIC LATEX PAINT.
G. METAL DOORS AND FRAMES SHALL RECEIVE A PRIMER COAT PLUS TWO COATS OF PAINT.
H. DIMENSIONS ARE TO STRUCTURAL COLUMN GRID, EDGE OF WINDOW OPENINGS, AND TO HINGE SIDE OF DOOR OPENINGS.
I. ALL SHOWER STALL DOORS SHALL BE F.1.5 UNLESS NOTED OTHERWISE. SEE A5 FOR DOOR/FRAME AND HARDWARE TYPES.
J. ALL TOILET STALL DOORS SHALL BE T.1.5 UNLESS NOTED OTHERWISE. SEE A5 FOR DOOR/FRAME AND HARDWARE TYPES.
K. INSTALL SHOWER CURTAINS AND RODS AT ALL SHOWERS.
L. SEE PLUMBING DRAWINGS FOR FLOOR DRAIN LOCATIONS.
M. PROVIDE CERAMIC TILE AT ALL SHOWER PANS AND SHOWER SURROUNDS.
N. PROVIDE CERAMIC TILE AT ALL ABLUTION AREAS PANS AND SURROUNDS.
O. SLOPE 1500 MM AREA AROUND DRAINS DOWN TO DRAIN AT 1:50 SLOPE. DRAIN SHALL BE SITUATED 30MM BELOW FINISH FLOOR.
P. SHOWER STALL WALLS AND TOILET STALL WALLS ARE 2400 MM HIGH. ALL OTHER WALLS ARE FULL HEIGHT.

ROOM FINISHES: (X)

1. WALLS: PAINTED PLASTER,
   FLOOR: SEALED CONCRETE
   CEILING: PAINTED PLASTER APPLIED TO STRUCTURE
2. WALLS: 2400 MM HIGH CERAMIC TILE WAINSCOT, PAINTED PLASTER ABOVE WAINSCOT
   FLOOR: CERAMIC TILE
   CEILING: PAINTED PLASTER

KEY NOTES: (X)

1. TYPICAL TOILET STALL LAYOUT – RE: DETAIL 1/A6
2. CONCRETE STOOP – RE: DETAIL 7/A5
3. SHOWER CURTAIN AND CURTAIN ROD, TYP. AT EACH SHOWER
4. FLOOR DRAIN, TYP
5. (7) STAINLESS STEEL LAUNDRY TUBS

LEGEND:

- DOOR TYPE, SEE SHEET A5
- (X) KEY NOTE
- FEC FIRE EXTINGUISHER CABINET
- (A) WINDOW TYPE, SEE SHEET A5
- (1) ROOM FINISH TYPE DESIGNATION
- FLOOR DRAIN

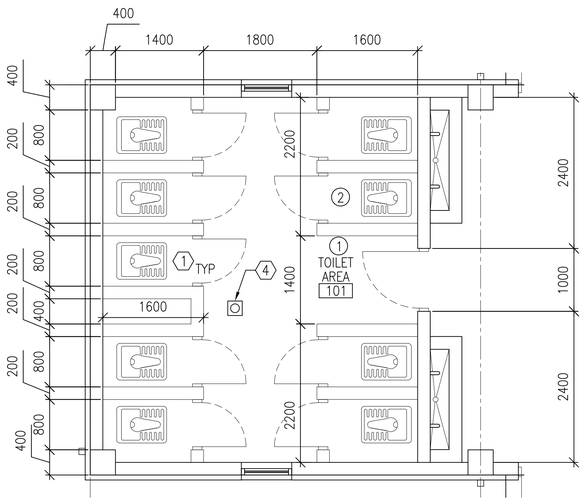

2 A1 A1 **ENLARGED TOILET PLAN**
SCALE: 1:50

N

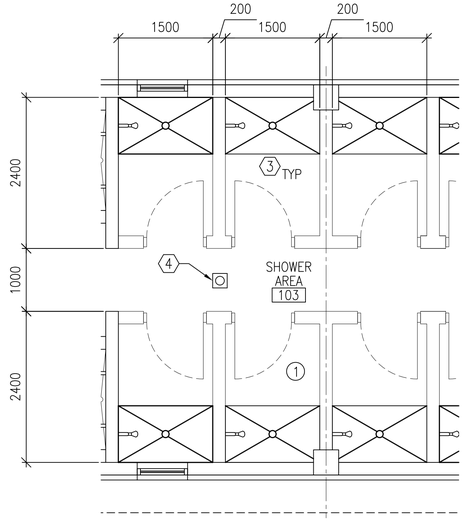

3 A1 A1 **ENLARGED SHOWER PLAN**
SCALE: 1:50

N

UNLESS OTHERWISE NOTED, LINEAR DIMENSIONS SHOWN ARE IN MILLIMETERS (MM)

0 1000 2000 4000
SCALE: 1: 50

0 2000 4000 8000
SCALE: 1: 100

US Army Corps of Engineers
Afghanistan Engineer District

	DATE	DESCRIPTION	SYMBOL
			APR

DESIGNED BY: | DATE: | SUBMITTED BY: | FILE NO.:
DWN BY: | CHK BY:

STANDARD DESIGN
VARIOUS PROJECTS
VARIOUS LOCATIONS, AFGHANISTAN

LATRINE BUILDING
MEDIUM

FLOOR PLAN AND ENLARGED PLANS

SHEET REFERENCE NUMBER:
A1

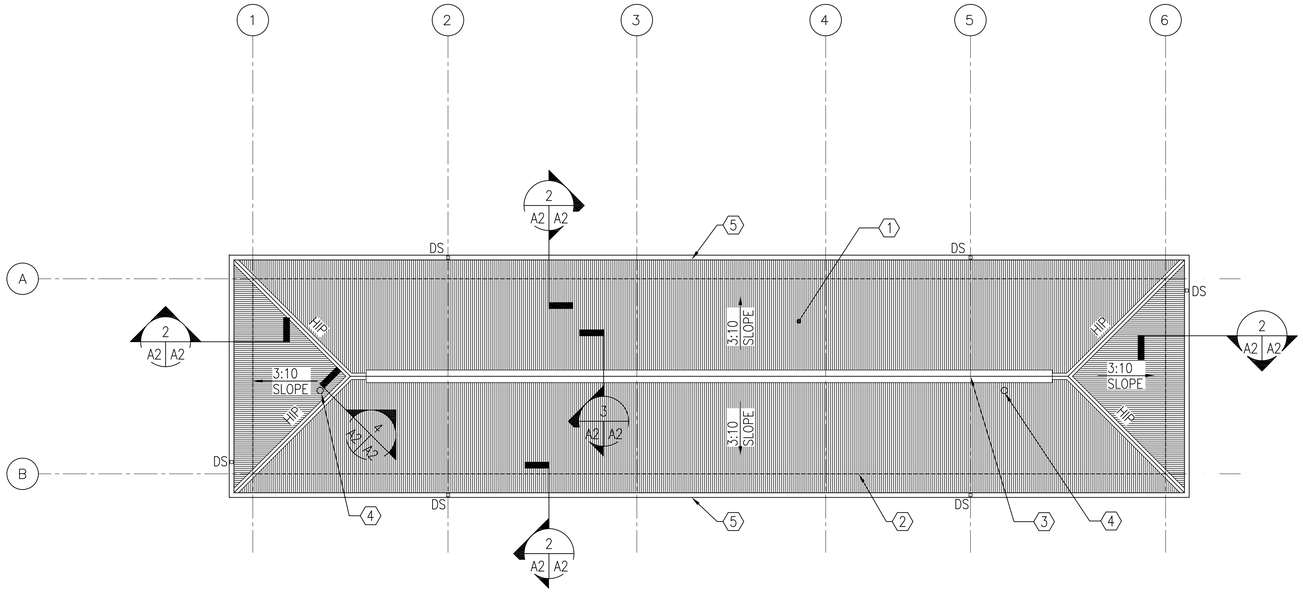

ROOF PLAN

1 A2 A2

SCALE: 1:100

N

KEY NOTES: (X)

1. CORRUGATED METAL ROOF PANELS ON COLD-FORMED METAL FRAMING
2. LINE OF BUILDING WALL, BELOW
3. CONTINUOUS RIDGE VENT
4. ROOF PENETRATION-RE: DETAIL 5/A2
5. METAL GUTTER

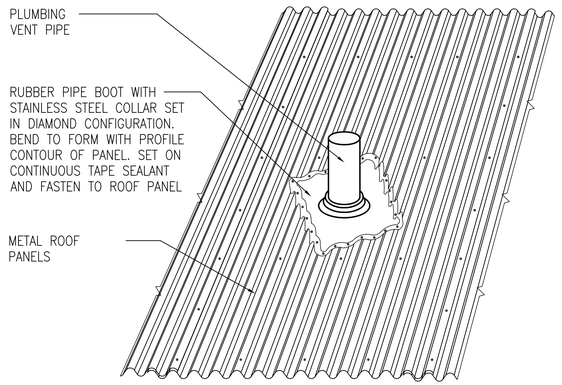

PLUMBING PIPE DETAIL

5 A2 A2

SCALE: NONE

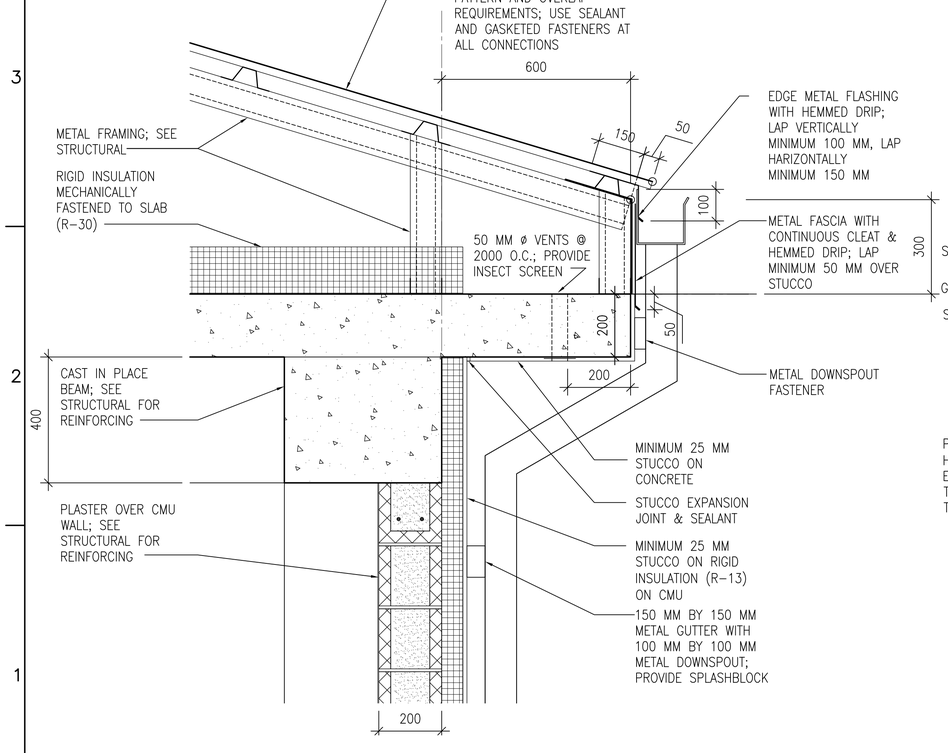

EAVE DETAIL

2 A2 A2

SCALE: 1:10

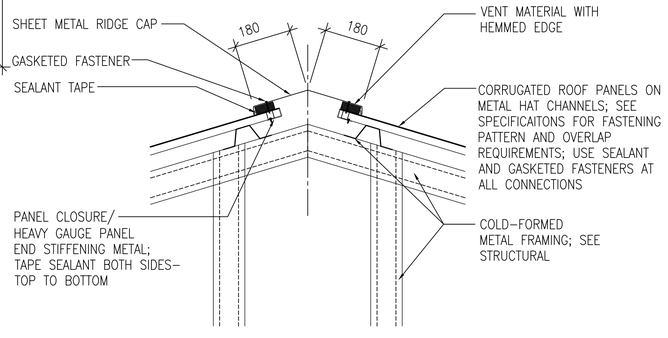

RIDGE VENT DETAIL

3 A2 A2

SCALE: 1:10

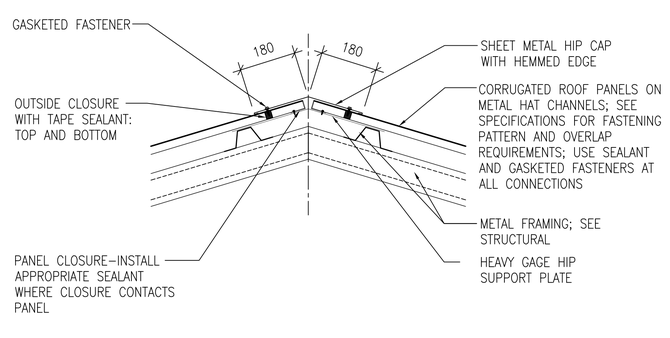

HIP DETAIL

4 A2 A2

SCALE: 1:10

UNLESS OTHERWISE NOTED, LINEAR DIMENSIONS SHOWN ARE IN MILLIMETERS (MM)

0 200 400 800

SCALE: 1: 10

0 2000 4000 8000

SCALE: 1: 100

US Army Corps of Engineers

Afghanistan Engineer District

	DATE	DESCRIPTION	SYMBOL
			APR

DESIGNED BY: | DATE: | SUBMITTED BY: | FILE NO.:

DWN BY: | CHK BY:

STANDARD DESIGN
VARIOUS PROJECTS
VARIOUS LOCATIONS, AFGHANISTAN

STANDARD DESIGN
TOILET ABLUTION BUILDING

ROOF PLAN AND DETAILS

SHEET REFERENCE NUMBER:

A2

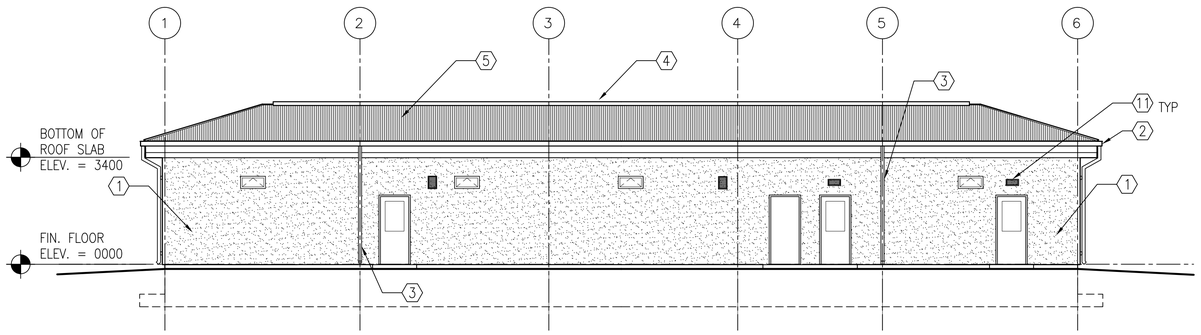

1 A1 A3 **EAST ELEVATION**

SCALE: 1:100

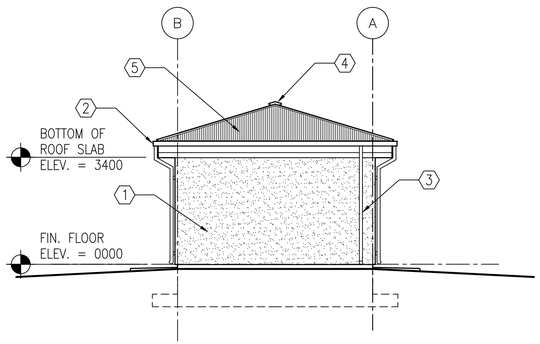

2 A1 A3 **NORTH ELEVATION**

SCALE: 1:100

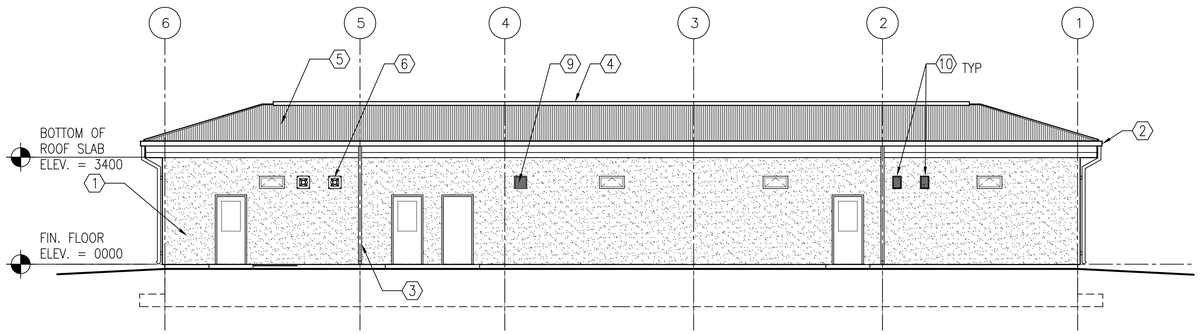

3 A1 A3 **WEST ELEVATION**

SCALE: 1:100

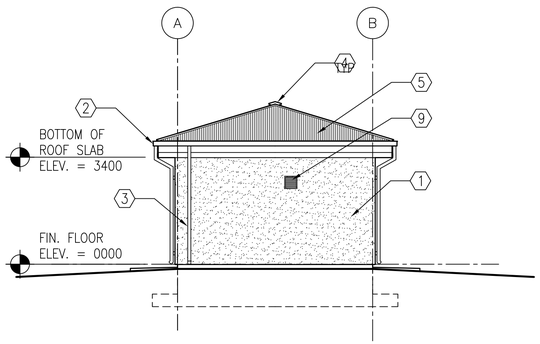

4 A1 A3 **SOUTH ELEVATION**

SCALE: 1:100

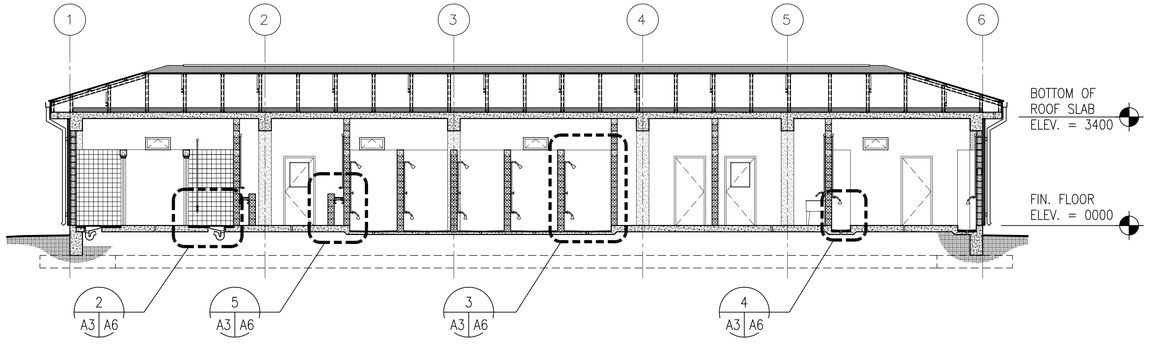

5 A1 A6 **BUILDING SECTION**

SCALE: 1:100

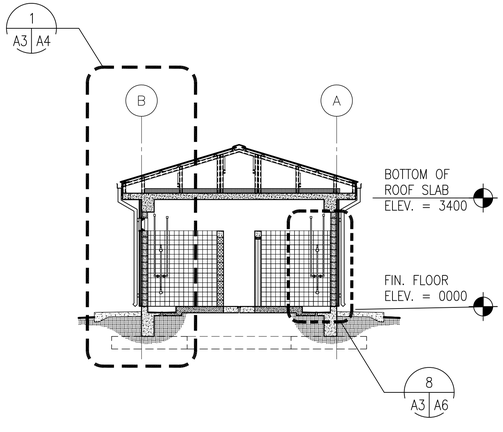

6 A3 A6 **BUILDING SECTION**

SCALE: 1:100

KEY NOTES: (X)

1. STUCCO AND RIGID INSULATION SYSTEM ON CMU AND CONCRETE.
2. METAL GUTTER
3. METAL DOWNSPOUT WITH SPLASH BLOCK
4. CONTINUOUS RIDGE VENT
5. CORRUGATED METAL ROOF PANELS ON COLD-FORMED METAL FRAMING
6. EXHAUST FAN – RE: MECH
7. CONCRETE SLAB CEILING
8. SEE STRUCTURAL DRAWINGS FOR FOUNDATION
9. EXHAUST FAN WITH DUCT WALL CAP – RE: MECH
10. SUPPLY AIR LOUVER – RE: MECH
11. INTAKE LOUVER – RE: MECH

GENERAL NOTES:

1. COORDINATE SIZE AND LOCATION OF OPENINGS FOR MECHANICAL ITEMS WITH MECHANICAL DRAWINGS.
2. PROVIDE STRUCTURAL LINTELS AS REQUIRED – RE: STRUCT

UNLESS OTHERWISE NOTED, LINEAR DIMENSIONS SHOWN ARE IN MILLIMETERS (MM)

0 2000 4000 8000

SCALE: 1: 100

US Army Corps of Engineers

Afghanistan Engineer District

SYMBOL	DESCRIPTION	DATE	APR

DESIGNED BY: | DWN BY: | CHK BY:

DATE: | SUBMITTED BY: | FILE NO.:

STANDARD DESIGN
VARIOUS PROJECTS
VARIOUS LOCATIONS, AFGHANISTAN

LATRINE BUILDING
MEDIUM
EXTERIOR ELEVATIONS

SHEET REFERENCE NUMBER:

A3

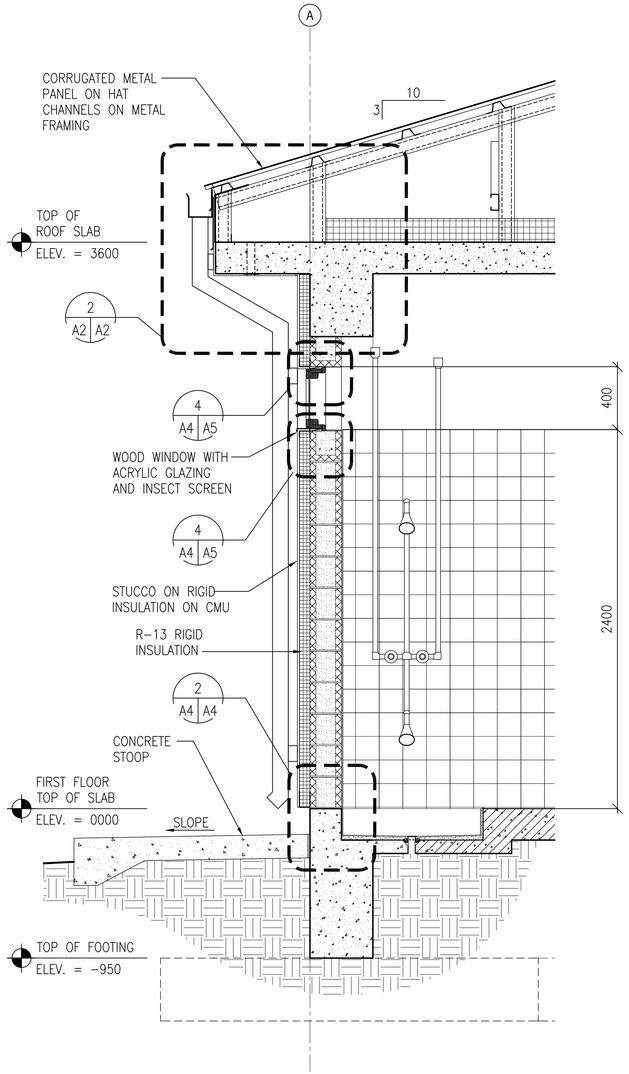

1 A3 A4 **WALL SECTION**
SCALE: 1:20

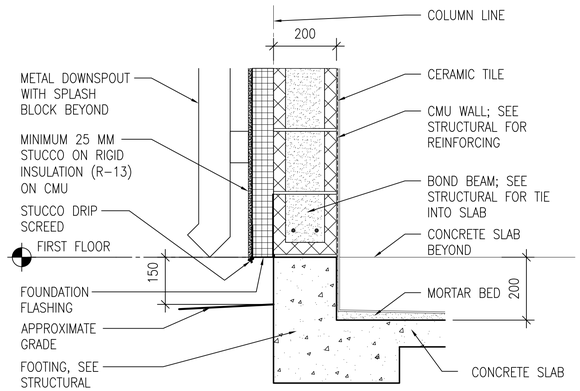

2 A4 A4 **STUCCO BASE DETAIL AT SHOWER**
SCALE: 1:10

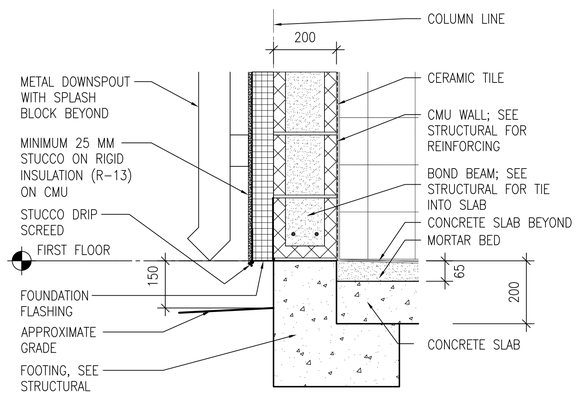

3 A4 A4 **STUCCO BASE DETAIL AT TOILET**
SCALE: 1:10

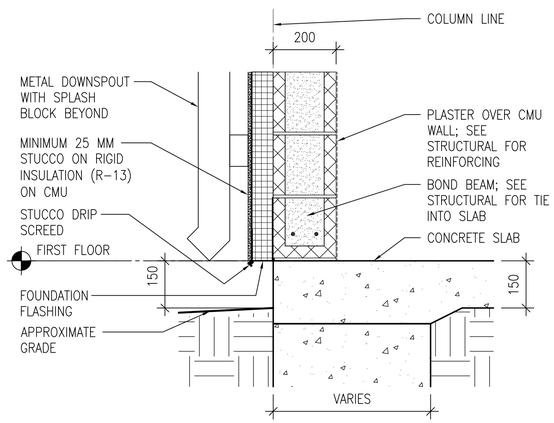

4 A4 A4 **STUCCO BASE DETAIL**
SCALE: 1:10

GENERAL NOTES:

A. COORDINATE SIZE AND LOCATION OF OPENINGS FOR MECHANICAL ITEMS WITH MECHANICAL DRAWINGS.
B. PROVIDE STRUCTURAL LINTELS AS REQUIRED – RE: STRUCT

KEY NOTES: ⟨X⟩

1. STUCCO AND RIGID INSULATION SYSTEM OVER CMU AND CONCRETE.
2. CORRUGATED METAL ROOF PANELS ON COLD-FORMED METAL FRAMING.

UNLESS OTHERWISE NOTED, LINEAR DIMENSIONS SHOWN ARE IN MILLIMETERS (MM)

0 400 800 1600
SCALE: 1: 20

0 2000 4000 8000
SCALE: 1: 100

US Army Corps of Engineers
Afghanistan Engineer District

SYMBOL	DESCRIPTION	DATE	APP

DESIGNED BY: | DATE:
DWN BY: | SUBMITTED BY:
CHK BY: | FILE NO.:

STANDARD DESIGN
VARIOUS PROJECTS
VARIOUS LOCATIONS, AFGHANISTAN

LATRINE BUILDING
MEDIUM
BUILDING & WALL SECTIONS

SHEET REFERENCE NUMBER:
A4

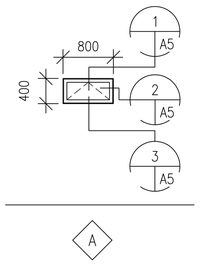

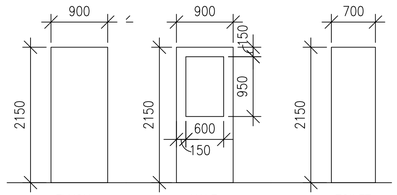

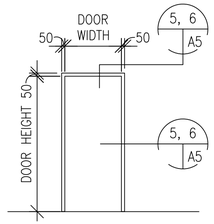

1 A5 A5 WINDOW TYPES
SCALE: 1:50

2 A5 A5 DOOR TYPES
SCALE: 1:50

3 A5 A5 FRAME TYPES
SCALE: 1:50

WINDOW TYPES NOTES:

1. ALL EXTERIOR WINDOWS SHALL BE WOOD WITH INSECT SCREENS. WINDOWS SHALL BE COMMERCIAL GRADE.
2. GLAZING SHALL BE ACRYLIC SHEET.

DOOR TYPES NOTES:

1. INTERIOR AND EXTERIOR METAL DOORS AND FRAME COLORS SHALL MATCH ADJACENT WALL COLORS AS SELECTED BY THE CONTRACTING OFFICER.
2. HARDWARE SHALL BE HEAVY DUTY, COMMERCIAL GRADE, STAINLESS STEEL WITH A MATTE FINISH.
3. FRAMES, EXCEPT FIRE-RATED FRAMES, SHALL BE MOUNTED AND ADJUSTED IN ACCORDANCE WITH MANUFACTURER'S INSTRUCTIONS. FRAMES SHALL BE FASTENED WITH MINIMUM OF THREE FASTENING POINTS PER SIDE AT REGULAR INTERVALS.
4. DIMENSIONS SHOWN ON DOOR SCHEDULE ARE BASED UPON MODULAR MASONRY (OR ROUGH OPENING), HEIGHT OF 2200mm FOR STANDARD PERSONNEL DOORS. CONTRACTOR SHALL COORDINATE WITH DOOR SUPPLIER TO ENSURE THAT DIMENSIONS OF DOORS AND FRAMES PROVIDED ARE COMPATIBLE WITH DOOR OPENING DIMENSIONS.

DOOR HARDWARE TYPES:

HW-1 1-1/2 PR HINGES
1 EA EXIT DEVICE, SURFACE MOUNTED F08
1 EA CYLINDER. GRADE 1
1 EA DOOR CLOSER, C02061,LOW RESISTANCE
1 EA THRESHOLD J32130

HW-5 1-1/2 PR HINGES, A8112
1 EA LOCKSET W/LEVERS. GRADE 1
1 EA DOOR STOP, L02101 OR L02161
2 EA MOP PLATE, J103

HW-6 1-1/2 PR HINGES
1 EA LOCKSET, F93 ENTRY LOCK W/LEVERS. GRADE 1
1 EA DOOR CLOSER, C02061,LOW RESISTANCE
1 EA THRESHOLD J32130

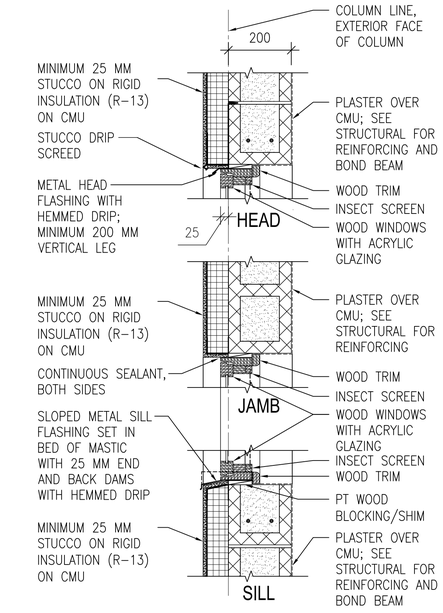

4 A4 A5 WINDOW DETAILS
SCALE: 1:10

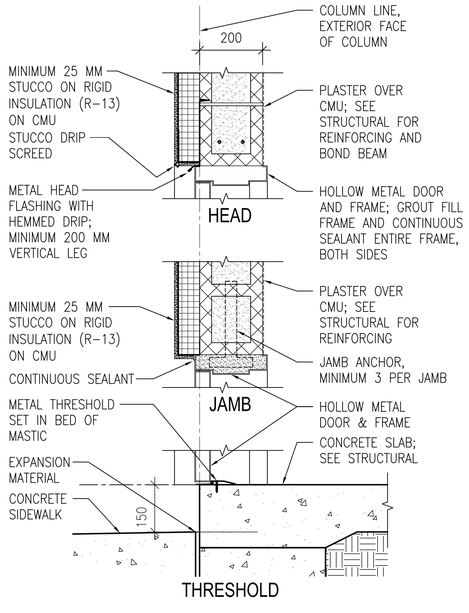

5 A5 A5 EXTERIOR DOOR DETAILS
SCALE: 1:10

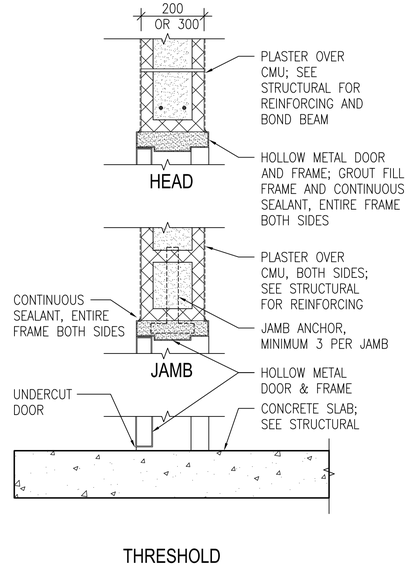

6 A5 A5 INTERIOR DOOR DETAILS
SCALE: 1:10

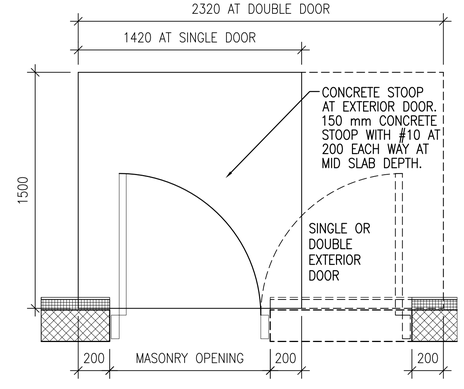

7 A5 A5 CONCRETE STOOP DETAILS
SCALE: 1:10

UNLESS OTHERWISE NOTED, LINEAR DIMENSIONS SHOWN ARE IN MILLIMETERS (MM)

0 200 400 800
SCALE: 1: 10

0 1000 2000 4000
SCALE: 1: 50

US Army Corps of Engineers
Afghanistan Engineer District

	DATE	DESCRIPTION	SYMBOL
			APR

DESIGNED BY: | DATE: | SUBMITTED BY: | FILE NO.:
DWN BY: | | CHK BY:

STANDARD DESIGN
VARIOUS PROJECTS
VARIOUS LOCATIONS, AFGHANISTAN

LATRINE BUILDING
MEDIUM
DOOR, WINDOW & FINISH TYPES & DETAILS

SHEET REFERENCE NUMBER:
A5

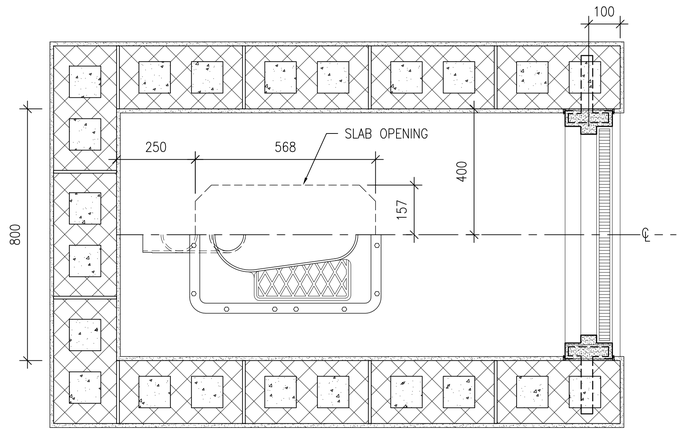

1 A1 A6 **TYPICAL TOILET STALL DETAIL**

SCALE: 1:10

ZURN Z1290 EASTERN STYLE WATER CLOSET

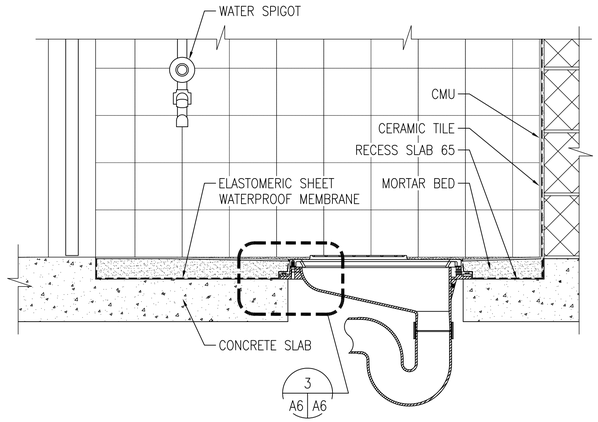

2 A1 A6 **LATRINE SECTION**

SCALE: 1:10

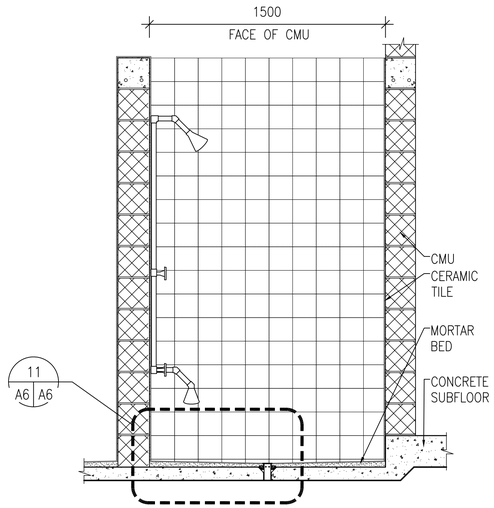

3 A1 A6 **SHOWER SECTION**

SCALE: 1:20

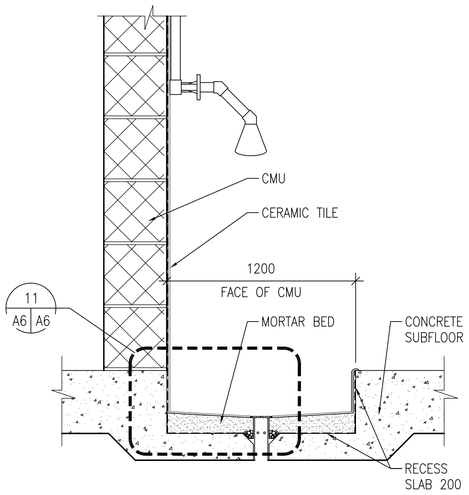

4 A3 A6 **ABLUTION SECTION**

SCALE: 1:10

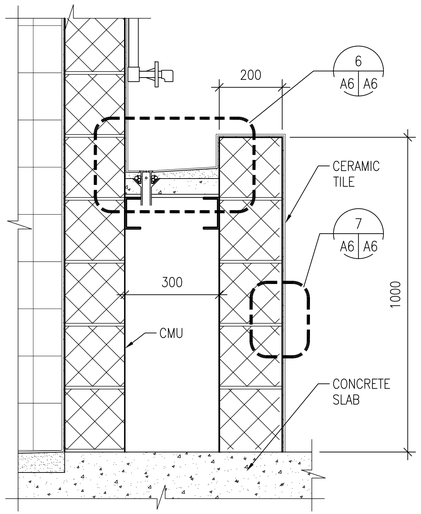

5 A1 A6 **LAVATORY SECTION**

SCALE: 1:10

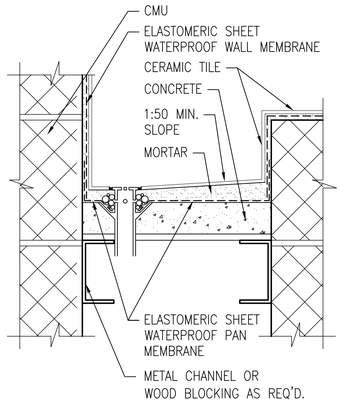

6 A6 A6 **LAVATORY DETAIL**

SCALE: NTS

NOTE: WALL MEMBRANE LAPS OVER PAN MEMBRANE

TCA METHOD: B417

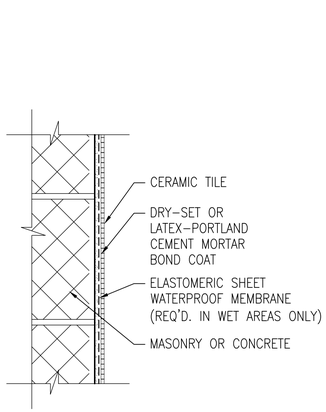

7 A6 A6 **WALL DETAIL**

SCALE: NTS

TCA METHOD: W222

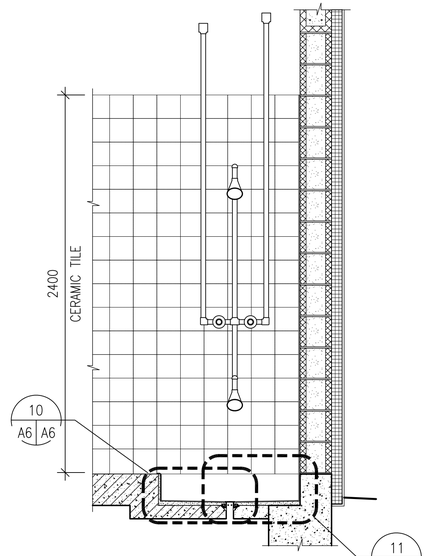

8 A1 A6 **SHOWER SECTION**

SCALE: 1:20

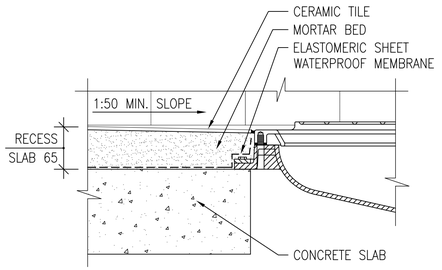

9 A6 A6 **MOUNTING DETAIL**

SCALE: NTS

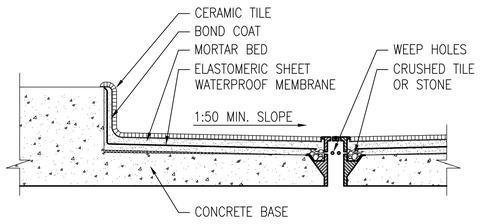

10 A6 A6 **SHOWER & ABLUTION RECESS**

SCALE: NTS

TCA METHOD: B421

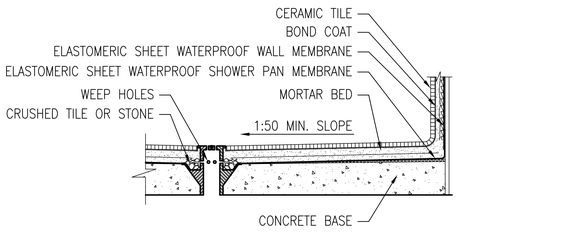

11 A6 A6 **SHOWER & ABLUTION WALL DETAIL**

SCALE: NTS

TCA METHOD: B421

US Army Corps of Engineers

Afghanistan Engineer District

NO.	DESCRIPTION	DATE	APR

DESIGNED BY: DATE:

DWN BY: SUBMITTED BY:

CHK BY: FILE NO.:

STANDARD DESIGN
VARIOUS PROJECTS
VARIOUS LOCATIONS, AFGHANISTAN

LATRINE BUILDING
MEDIUM
LATRINE AND SHOWER DETAILS

UNLESS OTHERWISE NOTED, LINEAR DIMENSIONS SHOWN ARE IN MILLIMETERS (MM)

0 200 400 800

SCALE: 1: 10

0 400 800 1600

SCALE: 1: 20

SHEET REFERENCE NUMBER:

A6

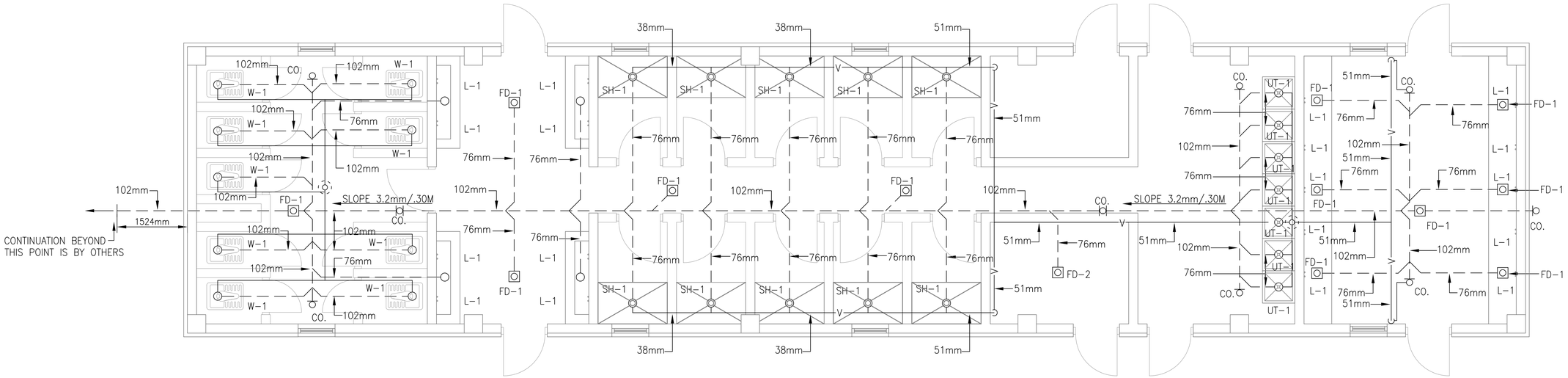

1 / P1 P1

SHOWER AND LATRINE BUILDING FLOOR PLAN - PLUMBING (SANITARY)

SCALE: 1:50

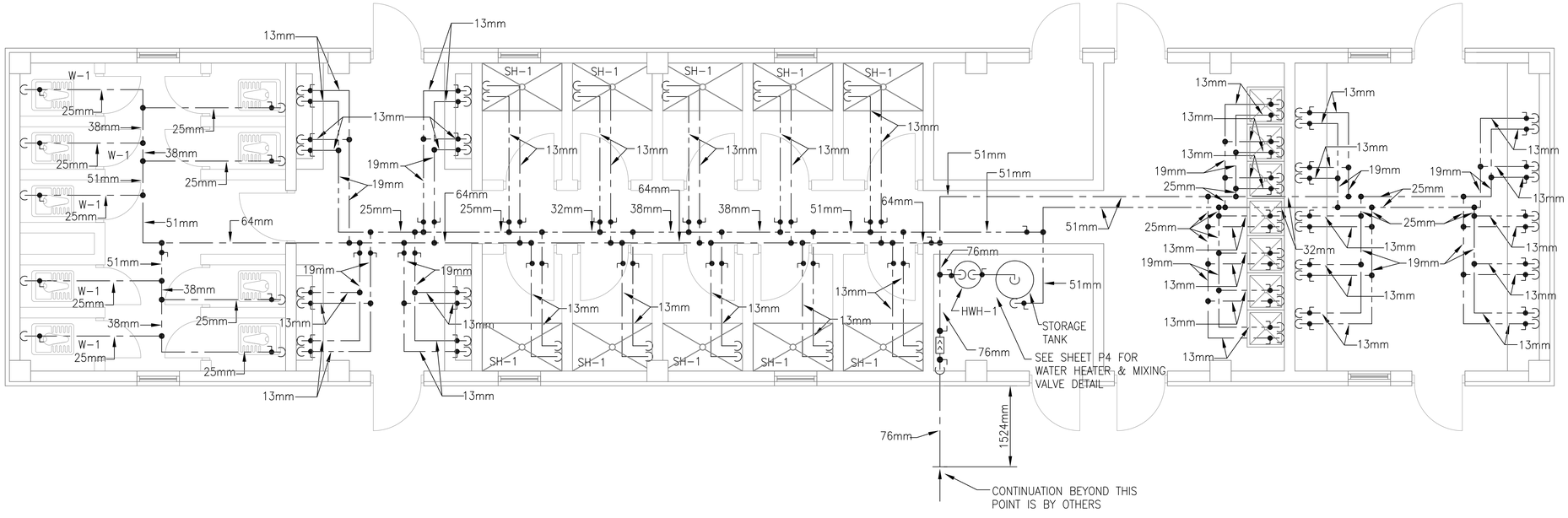

2 / P1 P1

SHOWER AND LATRINE BUILDING FLOOR PLAN - PLUMBING (WATER)

SCALE: 1:50

1:100

FLOOR PLAN NOTES:

1. DO NOT SCALE DRAWINGS – ALL DIMENSIONS AND CONDITIONS SHALL BE CHECKED AND VERIFIED BY THE CONTRACTOR AT THE SITE.
2. ALL WORK PERFORMED ON THIS BUILDING SHALL BE IN COMPLIANCE WITH ALL PERTINENT CODES, RULES, ORDINANCES AND REGULATIONS OF THE GOVERNING AUTHORITIES.
3. ALL WORK PERFORMED UNDER AND IN CONNECTION WITH THESE DRAWINGS AND SPECIFICATIONS SHALL BE IN STRICT COMPLIANCE WITH THE LATEST SAFETY AND HEALTH STANDARDS.
4. REPORT ANY DISCREPANCIES FOUND IN THE PLUMBING DRAWINGS AND/OR IN THE SPECIFICATIONS DURING THE BIDDING PROCESS FOR CLARIFICATION BY THE ENGINEER.
5. ALL EASTERN STYLE WATER CLOSETS IN THIS FACILITY ARE TO HAVE THE FIXTURE DESIGNATION OF W-1. EACH FIXTURE SHALL HAVE A (1) INCH (25mm) COLD WATER CONNECTION AND A (4) INCH (102mm) SANITARY CONNECTION.
6. ALL TROUGH FIXTURES IN THIS FACILITY ARE TO HAVE THE FIXTURE DESIGNATION OF L-1. EACH FIXTURE SHALL HAVE A (1/2 INCH) (13mm) COLD WATER, (1/2 INCH) (13mm) HOT WATER CONNECTION AND A (3 INCH) (76mm) SANITARY CONNECTION.
7. PLUMBING CONTRACTOR TO PROVIDE WATER HAMMER ARRESTORS AT ALL WATER CLOSETS.
8. PLUMBING CONTRACTOR TO PROVIDE TRAP PRIMERS AND 1/2" (13mm) COLD WATER LINES FOR ALL FLOOR DRAINS. COLD WATER LINES TO BE UNDER THE FLOOR FROM TRAP PRIMERS TO TRAPS ON FLOOR DRAINS.
9. REFER TO SHEET P3 & P4 FOR DETAILS AND SYMBOLS.
10. ALL WATER LINES TO BE EXPOSED. RUN LINES TIGHT TO CEILING AND WALL.
11. ALL FIXTURES TO BE "LOW FLOW EFFICIENT TYPE".

LEGEND

COLD WATER

HOT WATER

SANITARY ABOVE GROUND

SANITARY UNDER GROUND

VENT LINE — V —

US Army Corps of Engineers

Afghanistan Engineer District

SYMBOL	DESCRIPTION	DATE	APR

DESIGNED BY: | DATE:
DWN BY: | SUBMITTED BY:
CHK BY: | FILE NO.:

STANDARD DESIGN
VARIOUS PROJECTS
VARIOUS LOCATIONS, AFGHANISTAN

LATRINE BUILDING
MEDIUM
FLOOR PLAN - PLUMBING

SHEET REFERENCE NUMBER:

P1

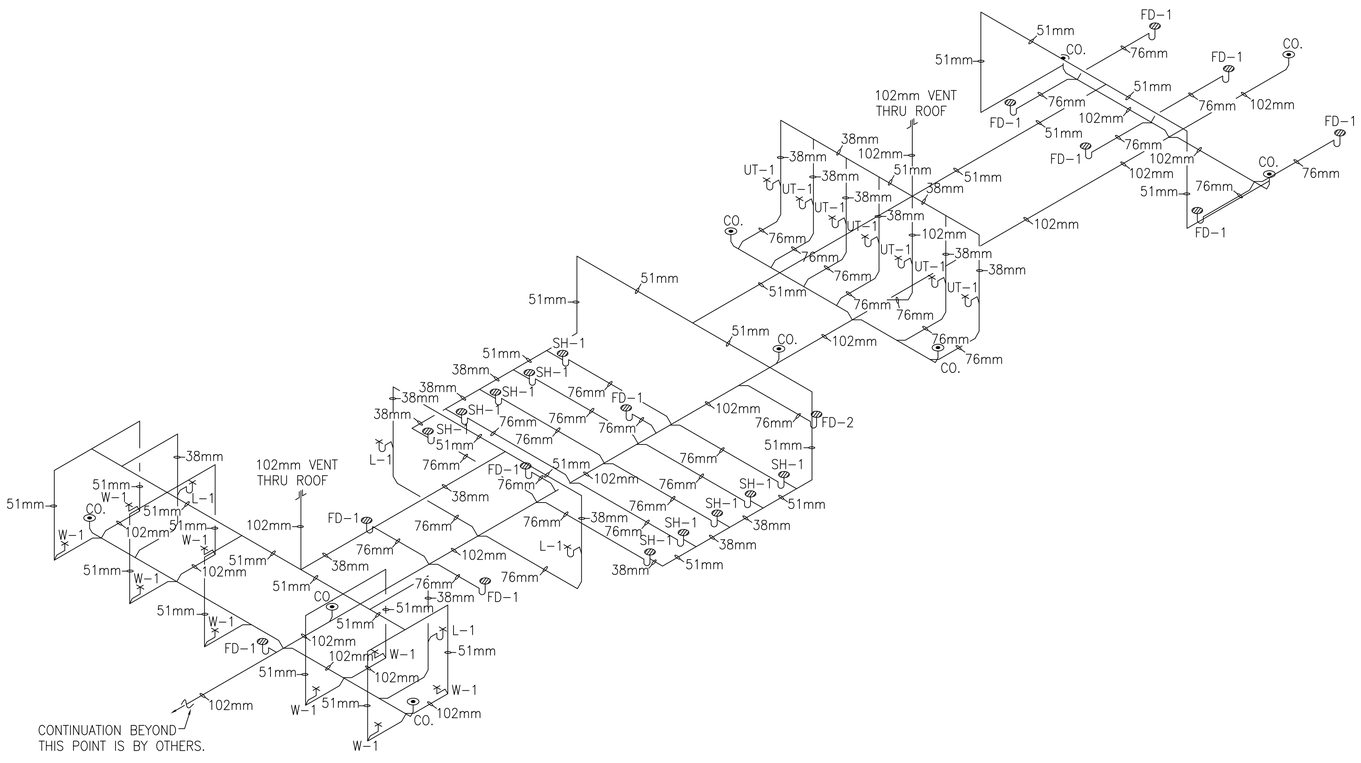

1 / P2 | P2

SHOWER AND LATRINE BUILDING - DRAINAGE ISOMETRIC

SCALE: NO SCALE

LEGEND

COLD WATER

HOT WATER

SANITARY ABOVE GROUND

SANITARY UNDER GROUND

VENT LINE — V —

1 0 1 2 3 4 5 6 7 8 9

1:100

US Army Corps of Engineers

Afghanistan Engineer District

SYMBOL	DESCRIPTION	DATE	APR

DESIGNED BY: | DATE:

DWN BY: | SUBMITTED BY:

CHK BY: | FILE NO.:

STANDARD DESIGN
VARIOUS PROJECTS
VARIOUS LOCATIONS, AFGHANISTAN

LATRINE BUILDING
MEDIUM

DRAINAGE ISOMETRIC

SHEET REFERENCE NUMBER:

P2

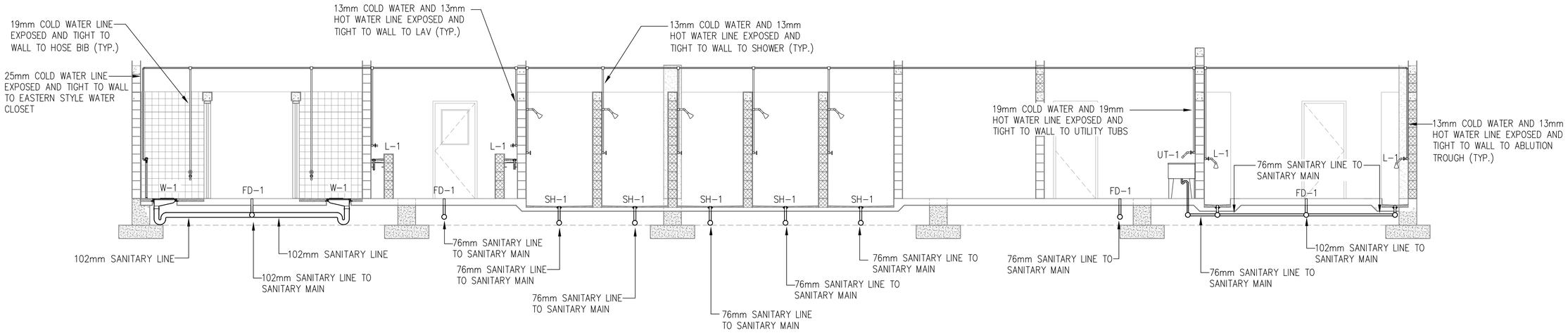

TYPICAL SHOWER & LATRINE BUILDINGSANITARY & WATER INSTALLATION SCHEMATIC

NO SCALE

1 0 1 2 3 4 5 6 7 8 9
1:100

US Army Corps of Engineers
Afghanistan Engineer District

SYMBOL	DESCRIPTION	DATE	APR

DESIGNED BY: | DWN BY: | CHK BY:
DATE: | SUBMITTED BY: | FILE NO.:

STANDARD DESIGN
VARIOUS PROJECTS
VARIOUS LOCATIONS, AFGHANISTAN
LATRINE BUILDING
MEDIUM
TYPICAL BUILDING PLUMBING SCHEMATICS

SHEET REFERENCE NUMBER:
P3

PLUMBING LEGEND – SYMBOLS AND ABBREVIATIONS

- SANITARY SEWER PIPING
- VENT PIPING (V)
- COLD WATER PIPING (CW)
- HOT WATER PIPING (HW)
- 140° HOT WATER PIPING (HW)
- BALL VALVE
- UNION
- WATER HAMMER ARRESTOR (WHA)
- BACKFLOW PREVENTER
- OR CLEANOUT (CO.)
- THERMOMETER
- PRESSURE GAUGE (PG)
- FLOOR DRAIN
- ROOF PENETRATION

DEG. OR °	DEGREE
DIA. OR ø	DIAMETER
E.C.	ELECTRICAL CONTRACTOR
°F	FAHRENHEIT
GA.	GAGE OR GAUGE
GAL.	GALLONS
G.P.H.	GALLONS PER HOUR
G.P.M.	GALLONS PER MINUTE
HD.	HEAD
HP.	HORSEPOWER
HR.	HOUR(S)
I.D.	INSIDE DIAMETER
KW.	KILOWATT
M.B.H.	1,000 B.T.U./HR.
MIN.	MINIMUM
N.C.	NORMALLY CLOSED
N.O.	NORMALLY OPEN
N.T.S.	NOT TO SCALE
NO.	NUMBER
OZ.	OUNCE
O.D.	OUTSIDE DIAMETER
%	PERCENT
PH. OR ø	PHASE (ELECTRICAL)
P.C.	PLUMBING CONTRACTOR
LBS.	POUNDS
P.S.I.	POUNDS PER SQUARE INCH
P.S.I.G.	POUNDS PER SQUARE INCH GAGE
PRESS.	PRESSURE
S.O.V.	SHUT-OFF VALVE
SPEC.	SPECIFICATION
STD.	STANDARD
TEMP.	TEMPERATURE
TYP.	TYPICAL
V.T.R.	VENT THROUGH ROOF
V.	VOLT
VOL.	VOLUME
W.	WATT

FIXTURE LIST

TYPE	ITEM	SOIL & WASTE	VENT	COLD WATER	HOT WATER	REMARKS	REMARKS 2
W-1	EASTERN STYLE WATER CLOSET	102mm	51mm	25mm	------	FLUSH VALVE	LOW FLOW EFFICIENT TYPE
L-1	TROUGH FIXTURE	38mm	38mm	13mm	13mm	FABRICATED IN FIELD	LOW FLOW EFFICIENT TYPE
SH-1	SHOWER	FLOOR DRAIN	------	13mm	13mm	PRIVATE SHOWER	LOW FLOW EFFICIENT TYPE
UT-1	UTILITY TUB	76mm	51mm	19mm	19mm	STAINLESS STEEL, WALL HUNG	LOW FLOW EFFICIENT TYPE
HWH-1	WATER HEATER	---	---	SEE DWG.	SEE DWG.	151 LITER ELECTRIC WATER HEATER, 380/3ø, 24KW	----------

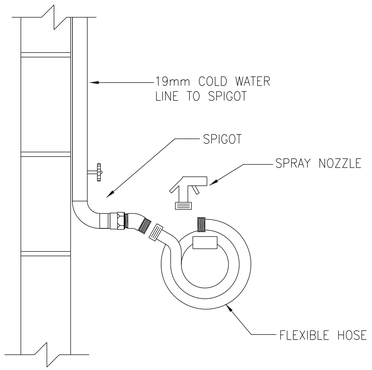

TYPICAL DETAIL – SPIGOT, FLEXIBLE HOSE, AND SPRAY NOZZLE
NO SCALE

GENERAL PLUMBING NOTES:

1. ALL SANITARY PIPING SHALL BE BELOW FLOOR, AND ALL WATER, AND VENT PIPING SHALL BE TIGHT TO CEILING, UNLESS OTHERWISE NOTED.
2. PLUMBING CONTRACTOR SHALL COORDINATE PLUMBING WORK WITH THE WORK OF ALL OTHER TRADES. VERIFY THE LOCATIONS OF ALL UTILITIES AT THE SITE PRIOR TO THE START OF ANY PLUMBING WORK.
3. COORDINATE ALL ACCESS PANEL LOCATIONS WITH THE ARCHITECT AND GENERAL CONTRACTOR.
4. ALL SANITARY PIPING BELOW SLAB SHALL BE A MINIMUM OF 51mm, UNLESS OTHERWISE NOTED OR AS REQUIRED BY THE LOCAL AUTHORITY HAVING JURISDICTION.
5. ALL SANITARY BRANCH LINES SHALL BE SLOPED AT 6mm PER 305mm, AND ALL MAIN LINES SHALL BE SLOPED AT 3mm PER 305mm, UNLESS OTHERWISE NOTED OR AS REQUIRED BY THE LOCAL AUTHORITY HAVING JURISDICTION.
6. THE PLUMBING CONTRACTOR SHALL BE RESPONSIBLE FOR COORDINATION WITH ALL UTILITY AUTHORITIES FORINSTALLATION REQUIRMENTS, REGULATIONS, FEES, PERMITS, AND APPROVALS BEFORE THE START OF CONSTRUCTION.
7. THE PLUMBING CONTRACTOR SHALL ROUGH-IN AND CONNECT ALL EQUIPMENT REQUIRING WATER, WASTE, AND/OR VENT WHETHER OR NOT FURNISHED UNDER THIS CONTRACT. THE PLUMBING CONTRACTOR SHALL ALSO FURNISH AND INSTALL ALL NECESSARY PIPE, FITTINGS, VALVES, TRAPS, ETC., REQUIRED FOR A COMPLETE INSTALLATION, LEAVING SAME READY FOR SERVICE.

Ⓐ CIRCULATING PUMP SHALL BE 20mm, 20Lpm@ 5m HEAD, 220 VOLT, 50 Hz.

LEGEND

- SERVICE VALVE
- CIRCULATION PUMP
- CHECK VALVE

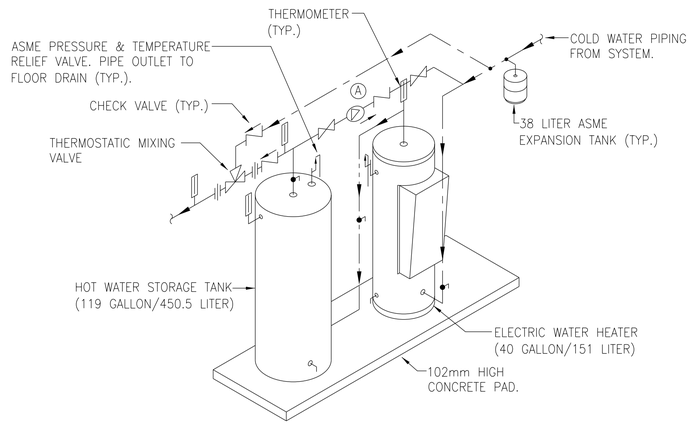

ELECTRIC WATER HEATER WITH STORAGE TANK PIPING SCHEMATIC
NO SCALE

US Army Corps of Engineers
Afghanistan Engineer District

SYMBOL	DESCRIPTION	DATE	APR
Ⓐ	ADD CIRC PUMP		

DESIGNED BY: DATE:
DWN BY: SUBMITTED BY:
CHK BY: FILE NO.:

STANDARD DESIGN
VARIOUS PROJECTS
VARIOUS LOCATIONS, AFGHANISTAN

LATRINE BUILDING
MEDIUM
PLUMBING SYMBOLS & ABBREVIATIONS, NOTES, SCHEDULES & DETAILS

SHEET REFERENCE NUMBER:
P4

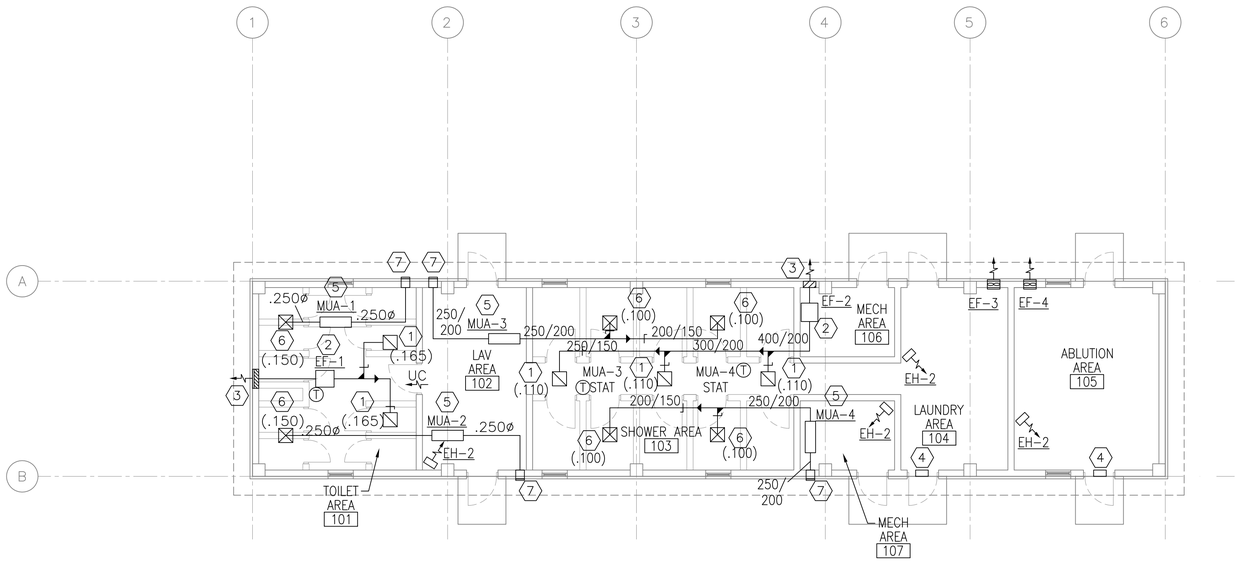

FLOOR PLAN - HVAC

SCALE: 1:100

N

GENERAL NOTES:

1. DO NOT SCALE DRAWINGS – ALL DIMENSIONS AND CONDITIONS SHALL BE CHECKED AND VERIFIED BY THE CONTRACTOR AT THE SITE.
2. ALL WORK PERFORMED ON THIS BUILDING SHALL BE IN COMPLIANCE WITH ALL PERTINENT CODES, RULES, ORDINANCES AND REGULATIONS OF THE GOVERNING AUTHORITIES.
3. ALL WORK PERFORMED UNDER AND IN CONNECTION WITH THESE DRAWINGS AND SPECIFICATIONS SHALL BE IN STRICT COMPLIANCE WITH THE LATEST SAFETY AND HEALTH STANDARDS.

SYMBOLS:

- (X) KEY NOTE
- (.050) AIR VOLUME IN CUBIC METERS PER SECOND (CMS)
- ¬ VOLUME DAMPER
- (T) THERMOSTAT WITH LOCKING COVER MOUNT ALL THERMOSTATS AT 1.5M (5 FT) AFF.

NUMBERED NOTE:

1. 300X300 (12X12) EXHAUST GRILLE CEILING, BALANCE TO CMS (CFM) IN PARENTHESIS.
2. INLINE EXHAUST FAN, SECURED TO STRUCTURE ABOVE WITH SPRING ISOLATORS, DUCTED TO WALL CAP..
3. 400x400 WALL CAP PER FAN MANUFACTURER.
4. 200X400 (8X16) LOW LEAKAGE GRAVITY WALL LOUVER FOR INTAKE. PROVIDE WEATHER PROOF LOUVER W/0.05mm (2") WASH DOWN FILTER AND SAND TRAP.
5. ELECTRIC MAKE UP AIR HEATER SECURED TO STRUCTURE ABOVE. ALL FINAL ELECTRICAL CONNECTIONS SHALL BE BY THE EC.
6. 300x300 (12x12) SUPPLY DIFFUSER WITH 4–WAY BLOW, BALANCE TO CMS IN PARENTHESIS.
7. 400X200 (16X8) LOW LEAKAGE GRAVITY WALL LOUVER FOR SUPPLY AIR. PROVIDE WEATHERPROOF LOUVER W/ 2" WASH DOWN FILTER AND SAND TRAP.

FAN SCHEDULE

NO.	TYPE	FAN CMS	DRIVE	HP	SP mmH2O	ELECT. CHAR.	SWITCH
EF–1	INLINE	0.330	DIRECT	1/4	13	220/1/50	@ WALL
EF–2	INLINE	0.330	DIRECT	1/4	13	220/1/50	@ WALL
EF–3	WALL	0.100	DIRECT	FRACT	13	220/1/50	@ WALL
EF–4	WALL	0.100	DIRECT	FRACT	13	220/1/50	@ WALL

NOTE:
1. FANS SHALL BE CORROSION RESISTANT
2. INLINE FANS SHALL BE SURFACE MOUNTED WITH SPRING ISOLATORS.

ELECTRIC UNIT HEATER SCHEDULE

NO.	CMS	KW	F.A.T. °C	ELECT. CHAR.	MOUNTING
EH–2	.200	2.6	38	370/1/50	WALL HUNG

NOTE:
1. ALL HEATERS SHALL BE CORROSION RESISTANT
2. UNIT HEATERS SHALL BE MOUNTED AS HIGH AS POSSIBLE.
3. UNIT HEATERS SHALL HAVE TAMPER PROOF INTEGRAL STATS.

MAKE UP AIR HEATERS

NO.	BLOWER CMS	FUSE	KW	MIN. TEMP RISE °C	SP mmH2O	ELECT. CHAR.	CONTROL
MUA–1	0.150	30	5	20	13	220/1/50	REMOTE
MUA–2	0.150	30	5	20	13	220/1/50	REMOTE
MUA–3	0.200	30	5	20	13	220/1/50	REMOTE
MUA–4	0.200	30	5	20	13	220/1/50	REMOTE

NOTES:
1. PROVIDE REMOTE MOUNTED THERMOSTAT WITH LOCKING COVER.
2. INTERLOCK BLOWER OPERATION WITH EXHAUST FANS.
3. BLOWER SHALL BE SET TO ENERGIZE WITH EXHAUST FAN(S), HEAT SHALL BE CONTROLLED BY THERMOSTAT. PROVIDE AIR SENSING SWITCH FOR HEATING OPERATION.

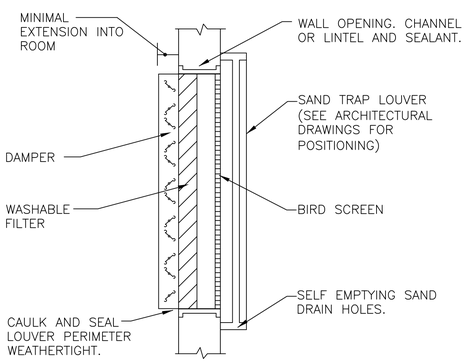

FILTERED SAND TRAP LOUVER
N.T.S.

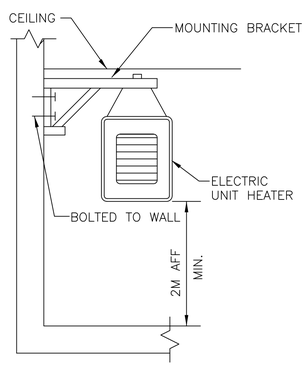

ELECTRIC UNIT HEATER MOUNTING
N.T.S.

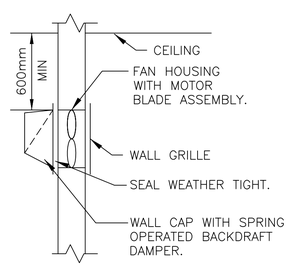

WALL MOUNTED EXHAUST FAN DETAIL
N.T.S.

US Army Corps of Engineers
Afghanistan Engineer District

APR	DATE	DESCRIPTION	SYMBOL

DESIGNED BY: | DATE: | SUBMITTED BY: | FILE NO.:
DWN BY: | CHK BY:

STANDARD DESIGN
VARIOUS PROJECTS
VARIOUS LOCATIONS, AFGHANISTAN
LATRINE BUILDING
MEDIUM
FLOOR PLAN - HVAC

SHEET REFERENCE NUMBER:
M1

POWER

- DISTRIBUTION PANELBOARD
- NEW PANELBOARD – SURFACE
- NEW PANELBOARD – RECESSED
- EXISTING PANELBOARD
- (G) GENERATOR
- TVSS TRANSIENT VOLTAGE SURGE SURPRESSOR
- TRANSFORMER (DRAWN TO SIZE)
- PS POWER SUPPLY
- CP CONTROL PANEL
- TC TIME CLOCK
- TIM ASTRONOMICAL TIME CLOCK– "SEE SPEC."
- R RELAY WITH RATING AND NUMBER OF POLES AS NOTED ON DRAWINGS– "SEE SPEC."
- J JUNCTION BOX
- (J) JUNCTION BOX – CEILING
- PB PULL BOX
- BD BUS DUCT HORIZONTAL
- BUS DUCT VERTICAL
- EMERGENCY POWER OFF PUSH BUTTON
- NON–FUSIBLE SAFETY SWITCH
- FUSIBLE SAFETY SWITCH
- (M) MOTOR
- ^{M} MOTOR STARTING SWITCH – 20A RATED
- ^{K} KEY SWITCH – 20A RATED
- FC FAN COIL – FURNISHED BY MECHANICAL CONTRACTOR, ELECTRICAL CONTRACTOR SHALL INSTALL AND PROVIDE POWER CONNECTION
- UH UNIT HEATER – FURNISHED BY MECHANICAL CONTRACTOR, ELECTRICAL CONTRACTOR SHALL INSTALL AND PROVIDE POWER CONNECTION
- D JUNCTION BOX FOR CONNECTION TO GARBAGE DISPOSAL
- CF LIGHT/HEATER/FAN – FURNISHED BY MECHANICAL CONTRACTOR, ELECTRICAL CONTRACTOR SHALL INSTALL AND PROVIDE POWER CONNECTION
- ELECTRIC WATER HEATER
- EPO WEATHERPROOF / EXPLOSION PROOF EMERGENCY POWER OFF PUSH–BUTTON TO BE INTERCONNECTED WITH GENERATOR SHUT DOWN CONTROL
- CEILING FAN – REFER TO SPECIFICATION SECTION 26 20 00

RECEPTACLES

- DUPLEX 20A BRITISH STANDARD UNSWITCHED SOCKETS
- ^{GF} DUPLEX 20A BRITISH STANDARD UNSWITCHED SOCKETS – 10mA GROUND FAULT INTERRUPTER TYPE
- ^{WP} DUPLEX 20A BRITISH STANDARD UNSWITCHED SOCKETS – 10mA GROUND FAULT INTERRUPTER TYPE WITH WEATHERPROOF COVER
- ^{EXP} DUPLEX 20A BRITISH STANDARD UNSWITCHED SOCKETS – EXPLOSION PROOF
- * INDICATES MOUNT DEVICE ABOVE COUNTER TOP

LIGHTNING PROTECTION

- AIR TERMINAL 20mm O.D. X 4m SOLID COPPER, NICKEL PLATED ON ADHESIVE BASE.
- EQ EQUIPMENT AIR TERMINAL
- TEST WELL WITH GROUND ROD(S)
- GROUND ROD
- G GROUND PLATE
- MAIN GROUND CONDUCTER CONCEALED WITHIN CONSTRUCTION
- MAIN GROUND CONDUCTOR EXPOSED ON EXPOSED ON BUILDING EXTERIOR SURFACE
- GROUND CONDUCTOR CAD WELDED TO GROUND CABLE OR EQUIPMENT
- GROUND CONDUCTOR CAD WELDED TO BUILDING STEEL COLUMN
- GROUND ROD TRIPOD, SPACED 10 FEET APART.
- LEVEL TO LEVEL CABLE

LIGHTING

- LIGHTING FIXTURE – SEE FIXTURE SCHEDULE FOR MORE INFORMATION
- LIGHTING FIXTURE – SEE FIXTURE SCHEDULE FOR MORE INFORMATION
- DOWNLIGHT
- LIGHTING FIXTURE ON NORMAL/EMERGENCY
- WALL MOUNTED LIGHT FIXTURE
- E EXIT SIGN – DIRECTIONAL ARROWS AS INDICATED ON DRAWINGS
- B BATTERY PACK WITH HEADS AS INDICATED ON DRAWINGS
- REMOTE HEAD FOR BATTERY PACK
- $ SINGLE POLE SWITCH – 20A RATED
- ^{3} 3–WAY SWITCH – 20A RATED
- ^{4} 4–WAY SWITCH – 20A RATED
- PC PHOTOCELL VOLTAGE TO MATCH CIRCUITRY
- LC LIGHTING CONTACTOR
- POLE MOUNTED SITE LIGHTING FIXTURE– NUMBER OF FIXTURES PER POLE AS INDICATED ON DRAWINGS
- EXTERIOR DIRECTIONAL LIGHTING FIXTURE
- a SMALL CASE LETTERS REPRESENTS LAMP(S) / SWITCHES. WHEN USED WITH AN OCCUPANCY SENSOR THIS INDICATES SENSOR WITH MANUAL OVERRIDE SWITCH

TELECOMMUNICATIONS

- TELEPHONE OUTLET(S) @ 18" AFF. U.N.O. WITH 3/4" RACEWAY TERMINATED ABOVE NEAREST ACCESSIBLE CEILING OR TO TELEPHONE TERMINAL BOARD IF NO ACCESSIBLE CEILING AVAILABLE. SEE TELE/DATA RISER DIAGRAM FOR OUTLET AND CABLE DESCRIPTION
- DATA OUTLET(S) @ 18" AFF. U.N.O. WITH 3/4" RACEWAY TERMINATED ABOVE NEAREST ACCESSIBLE CEILING OR TO DATA EQUIPMENT RACK IF NO ACCESSIBLE CEILING AVAILABLE. SEE TELE/DATA RISER DIAGRAM FOR OUTLET AND CABLE DESCRIPTION

TELECOMMUNICATIONS (CONTINUED)

- COMBINATION TELEPHONE/DATA OUTLET(S) @ 18" AFF. U.N.O. WITH 1" RACEWAY TERMINATED ABOVE NEAREST ACCESSIBLE CEILING OR TO TELE/DATA TERMINAL AREA IF NO ACCESSIBLE CEILING AVAILABLE. SEE TELE/DATA RISER DIAGRAM FOR OUTLET AND CABLE DESCRIPTION
- W WALL MTD. TELEPHONE OUTLET WITH 3/4" RACEWAY TERMINATED ABOVE NEAREST ACCESSIBLE CEILING OR TO TELEPHONE TERMINAL BOARD IF NO ACCESSIBLE CEILING AVAILABLE. SEE TELE/DATA RISER DIAGRAM FOR OUTLET AND CABLE DESCRIPTION
- (x)T INDICATES NUMBER OF TELEPHONE OUTLET(S) AND ASSOCIATED CABLING
- (x)D INDICATES NUMBER OF DATA OUTLET(S) AND ASSOCIATED CABLING
- (x)TF INDICATES NUMBER OF TELEPHONE OUTLETS AND ASSOCIATED CABLING WITH 1 OUTLET AND CABLE DEDICATED FOR FAX

SINGLE LINE SYMBOLS

- SWITCH
- BREAKER
- FUSE
- TRANSFORMER
- CAPACITOR
- GROUND
- CONTACT (NORMALLY OPEN)
- CONTACT (NORMALLY CLOSED)
- AUTOMATIC TRANSFER SWITCH
- MANUAL DOUBLE THROW SWITCH
- CURRENT TRANSFORMER
- INDICATES NEW ELECTRICAL EQUIPMENT
- C INDICATES NEW CONTROL WIRING AND CONDUIT
- EQUIPMENT OUTLINE

MISCELLANEOUS

- BRANCH CIRCUIT WIRING CONCEALED ABOVE CEILINGS, SURFACE MOUNTED ON WALLS
- BRANCH CIRCUIT WIRING – #10 AWG
- BRANCH CIRCUIT WIRING – UNDER FLOOR
- HOME RUN BACK TO PANEL
- CONDUIT TURNED DOWN
- CONDUIT TURNED UP
- LV LOW VOLTAGE WIRING AND CONDUIT
- CT–X CABLE TRAY ("X" DENOTES WIDTH)
- INDICATES CONTINUATION OF LINE

FIRE ALARM

- FACP FIRE ALARM CONTROL PANEL WITH BATTERY BACKUP
- F FIRE ALARM PULL STATION

FIRE ALARM (CONTINUED)

- F FIRE ALARM STROBE – WALL MOUNTED
- F FIRE ALARM AUDIBLE/STROBE – WM
- F FIRE ALARM HORN/STROBE – WM
- (S) SMOKE DETECTOR
- (H) HEAT DETECTOR CEILING MOUNTED
- (D) DUCT DETECTOR – PROVIDED BY EC, INSTALLED BY MC AND CONNECTED BY EC

DENOTATIONS & ABBREVIATIONS

AFF	ABOVE FINISHED FLOOR
C	CEILING MOUNTED
E	EMERGENCY
EC	ELECTRICAL CONTRACTOR
EPO	EMERGENCY POWER OFF
EXP	EXPLOSION PROOF
F	FIRE ALARM
FF	FLUSH FLOOR MOUNTED
FL	FLUORESCENT
FO	FIBER OPTIC
FSS	FUSED SAFETY SWITCH
G	GROUND FAULT INTERRUPTER
GC	GENERAL CONTRACTOR
HOA	HAND–OFF AUTO
I	INFRARED
ICD	INCANDESCENT
IG	ISOLATED GROUND
K	KEY
LV	LOW VOLTAGE
M	MOTOR
MC	MECHANICAL CONTRACTOR
NE	NORMAL/EMERGENCY
NFSS	NON–FUSED SAFETY SWITCH
PA	PAGING SYSTEM
PLC	PLUMBING CONTRACTOR
REL	RELOCATE
RED	RELOCATED
SL	SINGLE LINE
SS	SURGE SUPPRESSION
T	TELEPHONE
TL	TWIST LOCK

DENOTATIONS & ABBREVIATIONS (CONT.)

TP	TAMPER PROOF
UE	UNDERGROUND ELECTRIC
UF	UNDERGROUND FIBER
UT	UNDERGROUND TELEPHONE
W	WALL MOUNTED
WG	WIRE GUARD
WP	WEATHERPROOF
WPG	WEATHERPROOF/GROUND FAULT INTERRUPTER
WT	WATER TIGHT

GENERAL PROJECT NOTES:

G1. UNLESS OTHERWISE NOTED, PROVIDE ALL EQUIPMENT SHOWN ON THE PLANS. THE ELECTRICAL CONTRACTOR SHALL COORDINATE ALL SYMBOLS SHOWN ON THE PLANS WITH THE SYMBOL LIST. IT SHALL BE THE RESPONSIBILITY OF THE CONTRACTOR TO VERIFY THE INTENT OF ANY SYMBOL THAT IS SHOWN ON THE PLANS AND NOT INDICATED ON THE SYMBOL LIST WITH THE ENGINEER PRIOR TO BID.

G2. COORDINATE THE FINAL LOCATIONS OF ALL LIGHT FIXTURES WITH THE ARCHITECT'S REFLECTED CEILING PLANS. REPORT ANY DISCREPANCIES TO THE ARCHITECT PRIOR TO INSTALLATION.

G3. THE CONTRACTOR SHALL VERIFY THE LOCATION OF ALL UNDERGROUND UTILITIES WITHIN THE CONSTRUCTION AREA THREE (3) WORKING DAYS NOTICE BEFORE COMMENCE DIGGING. NOTIFY THE LOCAL OR STATE AUTHORITY HAVING JURISDICTION AND WAIT THE REQUIRED TIME BEFORE COMMENCING TO DIG.

G4. THE CONTRACTOR SHALL COORDINATE CONDUIT RUNS, CABLE TRAY, LIGHTING FIXTURES AND OTHER EQUIPMENT LOCATIONS WITH THE OTHER TRADE CONTRACTORS TO AVOID CONFLICTS.

G5. WHERE VOLTAGES AND FREQUENCIES ON THE DRAWINGS AND IN THE SPECIFICATIONS DIFFER FROM THE LOCAL ONES, ALL WORK SHALL BE PERFORMED USING THE LOCAL VOLTAGES AND FREQUENCIES.

G6. THE MINIMUM WIRE SIZE ON THE PROJECT SHALL BE 4mm2. THE MINIMUM CONDUIT SIZE SHALL BE 20mm. THE MINIMUM BREAKER SIZE SHALL BE 20 AMPS.

G7. THE CONTRACTOR SHALL PUT A MAXIMUM OF 6 DUPLEX SOCKETS ON A 20A SINGLE POLE CIRCUIT.

G8. WHERE THE 1010 SCOPE REVIEW, 1015 TECHNICAL REVIEW, DRAWINGS, AND SPECIFICATIONS DIFFER FROM AMERICAN CODES OR STANDARDS THE 1010, 1015, DRAWINGS, AND SPECIFICATIONS SHALL RULE.

G9. WORK FOR THE AMMUNITION SUPPLY POINT SHALL BE DONE IN ACCORDANCE WITH DEPARTMENT OF DEFENSE STANDARD DOD 6055.9–STD.

G10. ALL CONDUIT AND DEVICES SHALL BE SURFACE MOUNTED UNLESS OTHERWISE INDICATED.

US Army Corps of Engineers
Afghanistan Engineer District

	DATE	DESCRIPTION	SYMBOL
			APR

DESIGNED BY: | DATE:
DWN BY: | SUBMITTED BY:
CHK BY: | FILE NO.:

STANDARD DESIGN
VARIOUS PROJECTS
VARIOUS LOCATIONS, AFGHANISTAN

LATRINE BUILDING
MEDIUM

ELECTRICAL SYMBOLS AND ABBREVIATIONS

SHEET REFERENCE NUMBER:
E0

GENERAL NOTES:

1. REFER TO DRAWING #E0 FOR THE ELECTRICAL SYMBOLS LIST.
2. EXIT SIGNS SHALL BE WIRED AHEAD OF ANY LOCAL SWITCHING ON CIRCUITS.
3. REFER TO DRAWING #E4 FOR THE LIGHTING FIXTURE SCHEDULE.
4. REFER TO DRAWING #E3 FOR THE POWER RISER.
5. REFER TO DRAWING #E5 FOR PANEL SCHEDULES.
6. LIGHT FIXTURES INDICATED AS EMERGENCY SHALL BE PROVIDED WITH A BATTERY BACKUP BALLAST.

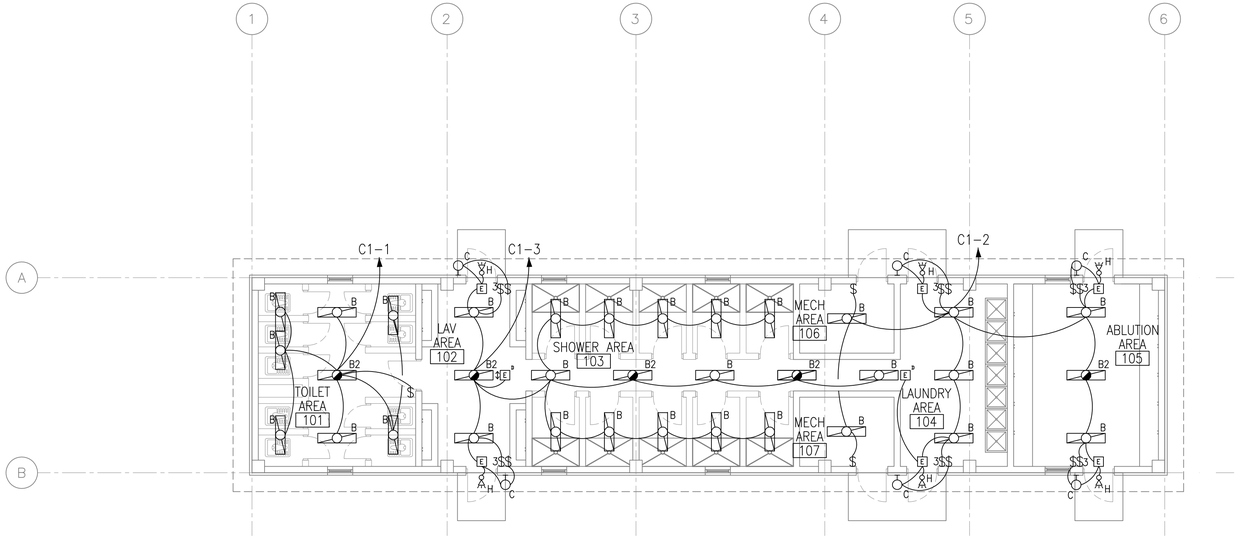

1 / E1 | E1 LIGHTING PLAN

SCALE: 1:100

N

UNLESS OTHERWISE NOTED, LINEAR DIMENSIONS SHOWN ARE IN MILLIMETERS (MM)

1 0 1 2 3 4 5 6 7 8 9

1:100

US Army Corps of Engineers

Afghanistan Engineer District

SYMBOL	DESCRIPTION	DATE	APR

DESIGNED BY: | DATE:
DWN BY: | SUBMITTED BY:
CHK BY: | FILE NO.:

STANDARD DESIGN
VARIOUS PROJECTS
VARIOUS LOCATIONS, AFGHANISTAN

LATRINE BUILDING
MEDIUM

LIGHTING PLAN

SHEET REFERENCE NUMBER:

E1

GENERAL NOTES:

1. REFER TO DRAWING #E0 FOR THE ELECTRICAL SYMBOLS LIST.
2. REFER TO DRAWING #E3 FOR THE POWER RISER.
3. REFER TO DRAWING #E5 FOR PANEL SCHEDULES.
4. COORDINATE EXACT MOUNTING LOCATION OF DISCONNECTING MEANS FOR MECHANICAL AND PLUMBING EQUIPMENT IN THE FIELD.
5. FUSIBLE SAFETY SWITCHES THAT ARE NOT OTHERWISE IDENTIFIED SHALL BE 380V, 1P, 30A FUSED SAFETY SWITCHES WITH 20A FUSES.

NUMBERED NOTES:

1. PANEL C1.
2. NEMA 3R, 380V, 3P, 60A FUSED DISCONNECT FUSED AT 60A. SEE PLUMBING DRAWINGS FOR EXACT LOCATION OF WATER HEATER.
3. SEE DRAWING #E5 FOR WIRE AND CONDUIT SIZE.
4. PROVIDE POWER CONNECTION TO EXHAUST FANS. SEE DRAWINGS #M1 AND #E5 FOR MORE INFORMATION.
5. PROVIDE POWER CONNECTION TO ELECTRIC UNIT HEATER #4. SEE DRAWINGS #M1 AND #E8 FOR MORE INFORMATION.
6. PROVIDE POWER CONNECTION TO ELECTRIC UNIT HEATER #5. SEE DRAWINGS #M1 AND #E8 FOR MORE INFORMATION.
7. PROVIDE POWER CONNECTION TO ELECTRIC UNIT HEATER #2. SEE DRAWINGS #M1 AND #E8 FOR MORE INFORMATION.
8. PROVIDE POWER CONNECTION TO MAKE UP AIR HEATER #1. SEE DRAWINGS #M1 AND #E8 FOR MORE INFORMATION.
9. PROVIDE POWER CONNECTION TO MAKE UP AIR HEATER #2. SEE DRAWINGS #M1 AND #E8 FOR MORE INFORMATION.
10. PROVIDE POWER CONNECTION TO MAKE UP AIR HEATER #3. SEE DRAWINGS #M1 AND #E8 FOR MORE INFORMATION.
11. PROVIDE POWER CONNECTION TO MAKE UP AIR HEATER #4. SEE DRAWINGS #M1 AND #E8 FOR MORE INFORMATION.
12. THE DISCONNECTING MEANS FOR THIS PIECE OF EQUIPMENT SHALL BE IN A NEMA 3R ENCLOSURE.

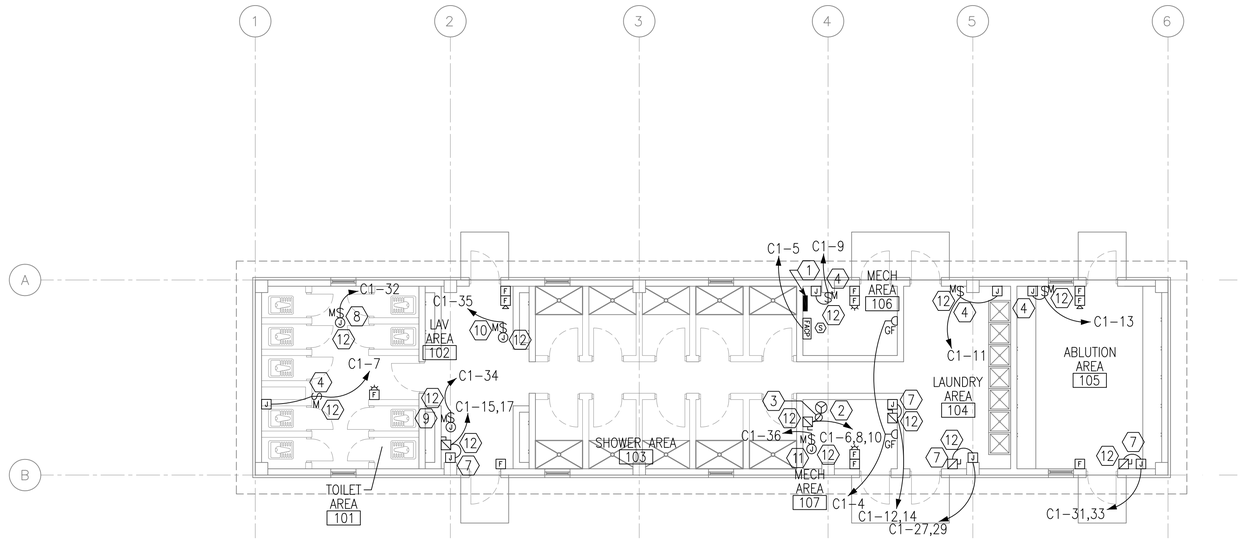

1 E2 | E2 POWER AND SYSTEMS PLAN

SCALE: 1:100

UNLESS OTHERWISE NOTED, LINEAR DIMENSIONS SHOWN ARE IN MILLIMETERS (MM)

1 0 1 2 3 4 5 6 7 8 9

1:100

US Army Corps of Engineers

Afghanistan Engineer District

SYMBOL	DESCRIPTION	DATE	APR

DESIGNED BY:	DATE:
DWN BY:	SUBMITTED BY:
CHK BY:	FILE NO.:

STANDARD DESIGN
VARIOUS PROJECTS
VARIOUS LOCATIONS, AFGHANISTAN
LATRINE BUILDING
MEDIUM

POWER AND SYSTEMS PLAN

SHEET REFERENCE NUMBER:

E2

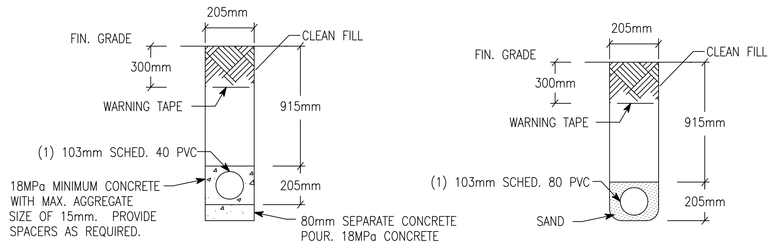

NOTE: PVC CONDUIT SHALL BE DIRECT BURIED SCHEDULE 80 FOR NO TRAFFIC AREAS AND CONCRETE-ENCASED SCHEDULE 40 FOR UNDER ROADWAYS OR TRAFFIC AREAS.

1 / E6 E6 TYPICAL DUCT BANK DETAILS FOR CONDUIT IN SAND OR CONCRETE

SCALE: N.T.S.

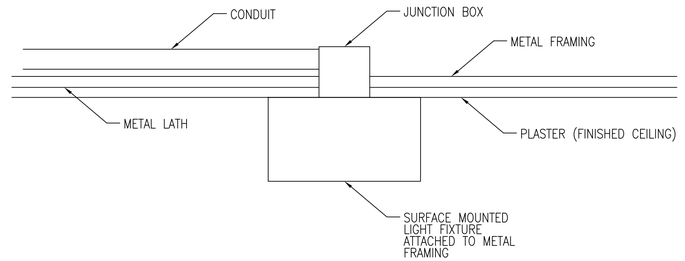

2 / E6 E6 TYPICAL DETAIL FOR SURFACE MOUNTED LIGHT FIXTURES

SCALE: N.T.S.

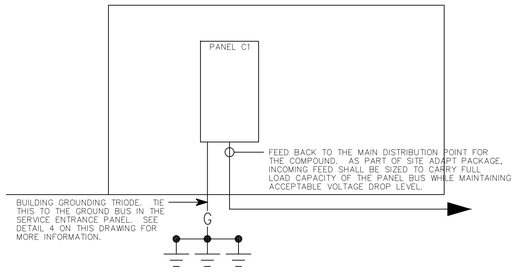

3 / E6 E6 TOILET/ABLUTION RISER DIAGRAM

SCALE: N.T.S.

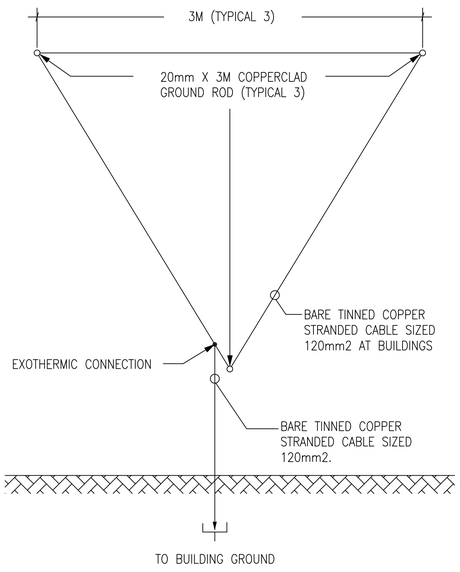

4 / E6 E6 GROUND TRIPOD SYSTEM DETAIL - PLAN

SCALE: N.T.S.

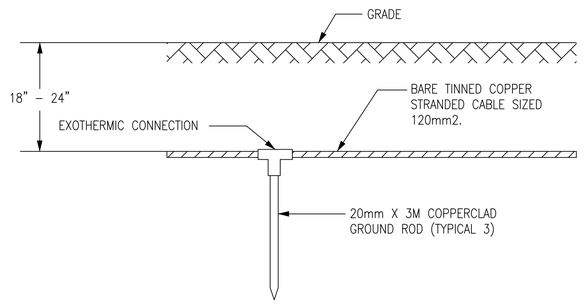

5 / E6 E6 GROUND TRIPOD SYSTEM DETAIL - ELEVATION

SCALE: N.T.S.

US Army Corps of Engineers

Afghanistan Engineer District

SYMBOL	DESCRIPTION	DATE	APP

DESIGNED BY: | DATE:
DWN BY: | SUBMITTED BY:
CHK BY: | FILE NO.:

STANDARD DESIGN
VARIOUS PROJECTS
VARIOUS LOCATIONS, AFGHANISTAN
LATRINE BUILDING
MEDIUM
DETAILS

SHEET REFERENCE NUMBER:

E3

LIGHTING FIXTURE SCHEDULE

FIXTURE MARK	STYLE NUMBER AND TYPE	NUMBER AND TYPE OF LAMPS	VOLTAGE	MOUNTING	NOTES
B	WET LOCATION WRAP AROUND SURFACE/PENDANT MOUNTED FLUORESCENT FIXTURE WITH PRISMATIC ACRYLIC LENS AND ELECTRONIC BALLAST	(2) 32W 3500K	220V – 1ø 50HZ	PENDANT MOUNTED FROM SLOPED CEILINGS	FURNISHED WITH ELECTRONIC BALLAST, VIRGIN ACRYLIC WRAP AROUND LENS.
B2	SAME AS FIXTURE 'B' WITH EMERGENCY BALLAST	(2) 32W 3500K	220V – 1ø 50HZ	PENDANT MOUNTED FROM SLOPED CEILINGS	FURNISHED WITH ELECTRONIC BALLAST, VIRGIN ACRYLIC WRAP AROUND LENS. EMERGENCY BALLAST WITH SELF TEST SWITCH.
C	INCANDESCENT ONE PIECE W/ APPROVED LENS STABILIZED HIGH IMPACT POLY CARBONATE.	(1) A19 – 100W INCANDESCENT	220V – 1ø 50HZ	WALL MOUNTED ABOVE EXTERIOR DOORS	
H	REMOTE HEAD EXTERIOR LIGHT HEAD POWERED FROM EXIT SIGN BATTERY– 12V DOUBLE HEAD CORROSION RESISTANT WITH UL34 WEATHERPROOF CONSTRUCTION	(2) 12W/12V HALOGEN LAMP	12V – 1ø 50HZ	EXTERIOR WALL MOUNTED AT TOP OF DOOR HEIGHT	
[E]	UNIVERSAL MOUNT ENGINEER GRADE THERMOPLASTIC HOUSING EXIT SIGN WITH LED LAMPS, RED LETTERS 6" IN HEIGHT WITH ARROWS AS INDICATED, WITH 12V CADMIUM BATTERY WITH REMOTE HEAD CAPABILITY	LED LAMPS	220V – 1ø 50HZ	UNIVERSAL MOUNTING	

FIXTURE MARK 'B'

WET LOCATION WRAP AROUND SURFACE/PENDANT MOUNTED FLUORESCENT FIXTURE WITH PRISMATIC ACRYLIC LENS AND ELECTRONIC BALLAST.

FIXTURE MARK 'B2':
SAME FIXTURE AS 'B' WITH EMERGENCY BALLAST.

FIXTURE MARK 'C'

INCANDESCENT ONE PIECE WITH APPROVED LENS, STABILIZED HIGH IMPACT POLY CARBONATE

FIXTURE MARK 'H'

REMOTE HEAD EXTERIOR LIGHT HEAD POWERED FROM EXIT SIGN BATTERY– 12V DOUBLE HEAD CORROSION RESISTANT WITH UL34 WEATHERPROOF CONSTRUCTION

FIXTURE MARK '[E]'

UNIVERSAL MOUNT ENGINEER GRADE THERMOPLASTIC HOUSING EXIT SIGN WITH LED LAMPS, RED LETTERS 6" IN HEIGHT WITH ARROWS AS INDICATED, WITH 12V CADMIUM BATTERY

US Army Corps of Engineers
Afghanistan Engineer District

SYMBOL	DESCRIPTION	DATE	APR

DESIGNED BY: | DATE:
DWN BY: | SUBMITTED BY:
CHK BY: | FILE NO.:

STANDARD DESIGN
VARIOUS PROJECTS
VARIOUS LOCATIONS, AFGHANISTAN
LATRINE BUILDING
MEDIUM

LIGHT FIXTURE SCHEDULE

SHEET REFERENCE NUMBER:
E4

PANELBOARD C1 SURFACE MOUNTED ASYM. A.I.C. MIN.
_____ AMP. MAIN LUGS (OR) 150 AMP. MAIN BREAKER W/ 150 AMP. TRIP
CIRCUIT BREAKER TYPE 380/220 VOLTS 3 PHASE 4 WIRE 50 HZ 150 AMP. BUS

CKT. NO.	TRIP AMPS	NO. POLES	WIRE MM²	GND MM²	CONDUIT MM	LOAD SERVED	LOAD-V.A. A0	LOAD-V.A. B0	LOAD-V.A. C0	LOAD-V.A. A0	LOAD-V.A. B0	LOAD-V.A. C0	LOAD SERVED	CONDUIT MM	GND MM²	WIRE MM²	NO. POLES	TRIP AMPS	CKT. NO.
1	20	1	4.0	4.0	20	LIGHTING - 101	0.5			1.0			LIGHTING - 104-107	20	4.0	4.0	1	20	2
3	20	1	4.0	4.0	20	LIGHTING - 102, 103		1.4			0.4		RECEPTACLES - 106, 107	20	4.0	4.0	1	20	4
5	20	1	4.0	4.0	20	F.A.C.P.			0.5			6.0							6
7	20	1	4.0	4.0	20	EXHAUST FAN - 101	0.7			6.0			WATER HEATER - 107	32	6.0	25.0	3	40	8
9	20	1	4.0	4.0	20	EXHAUST FAN - 106		0.7			6.0								10
11	20	1	4.0	4.0	20	EXHAUST FAN - 104			0.5			1.3	ELECTRIC HEAT - 107	20	4.0	4.0	2	20	12
13	20	1	4.0	4.0	20	EXHAUST FAN - 105	0.5			1.3									14
15	20	2	4.0	4.0	20	ELECTRIC HEAT - 102		1.3					SPARE				2	20	16
17									1.3										18
19	20	2				SPARE							SPARE				2	20	20
21																			22
23	20	2				SPARE							SPARE				2	20	24
25																			26
27	20	2	4.0	4.0	20	ELECTRIC HEAT - 104		1.3					SPARE				2	20	28
29									1.3										30
31	20	2	4.0	4.0	20	ELECTRIC HEAT - 105	1.3			5.0			MUA-1	20	6.0	6.0	1	30	32
33								1.3			5.0		MUA-2	20	6.0	6.0	1	30	34
35	30	1	6.0	6.0	20	MUA-3			5.0			5.0	MUA-4	20	6.0	6.0	1	30	36
37	40	3	25.0	6.0	32	WATER HEATER	6.0			6.0			WATER HEATER	32	6.0	25.0	3	40	38
39								6.0			6.0								40
41									6.0			6.0							42
							9.0	12.0	14.6	19.3	17.4	18.3							

TOTAL CONN. LOAD PER PHASE (KVA): A0 18.3 B0 19.4 C0 17.9

TOTAL CONN. LOAD 90.6 KVA. 70 % DEMAND = ESTIMATED DEMAND LOAD 63.42 SUPPLIED FROM MAIN SWITCHGEAR DISTRIBUTION

• MAIN BREAKER SHALL BE 3P EARTH GROUND TYPE

US Army Corps of Engineers
Afghanistan Engineer District

SYMBOL	DESCRIPTION	DATE	APR

DESIGNED BY: DATE: | DWN BY: SUBMITTED BY: | CHK BY: FILE NO.:

STANDARD DESIGN
VARIOUS PROJECTS
VARIOUS LOCATIONS, AFGHANISTAN

LATRINE BUILDING
MEDIUM

PANEL SCHEDULES AND RISER DIAGRAM

SHEET REFERENCE NUMBER:
E5

ENGINEERING AND CONSTRUCTION DIVISION
US ARMY ENGINEER DISTRICT, AFGHANISTAN
APO AE, 09356

FP04a - GUARD TOWER WITH CONCRETE WALK AND FENCE

SITE ADAPT DESIGN

JANUARY 31, 2012

SECTION/DETAIL CROSS REFERENCING CONVENTIONS

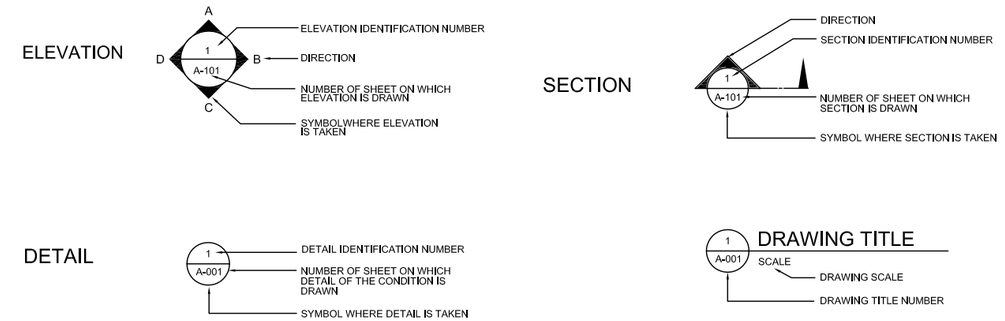

SCHEDULE OF DRAWINGS

SHEET NO	SHEET REFERENCE NO	DESCRIPTION	REV STATUS	SHEET NO	SHEET REFERENCE NO	DESCRIPTION	REV STATUS	SHEET NO	SHEET REFERENCE NO	DESCRIPTION	REV STATUS
		GENERAL									
1	G-001	TITLE SHEET & SCHEDULE OF DRAWINGS	01/31/2012								
		STRUCTURAL									
2	S-101	FOUNDATION PLAN & SECTION	01/31/2012								
3	S-102	SECTIONS & ELEVATIONS	01/31/2012								
4	S-103	STAIR DETAILS	01/31/2012								
		ARCHITECTURAL									
5	A-101	FOUNDATION, FLOOR, & ROOF PLANS	01/31/2012								
6	A-102	SECTIONS & ELEVATIONS	01/31/2012								
7	A-103	ROOF PLAN AND DETAILS (SHEET A-102 FROM CHAIN LINK)	01/31/2012								
8	A-104	DOOR, WINDOW & FINISH TYPES AND DETAILS	01/31/2012								
		ELECTRICAL									
9	E-101	RECEPTACLE, POWER GROUNDING & LIGHTING PLAN	01/31/2012								
10	E-102	LIGHT FIXTURE SCHEDULE AND DETAILS	01/31/2012								

US Army Corps of Engineers
AFGHANISTAN ENGINEER DISTRICT

MARK	DESCRIPTION	DATE	APPR.
1	ISSUED FOR CONSTRUCTION	01/31/2012	

DESIGNED BY: S.GROOMS
DWN BY: C4D
CKD BY:
SUBMITTED BY: M. HOAGUE
DATE: 01/31/2012
SOLICITATION NO.: .
CONTRACT NO.: .
PLOT DATE: .
PLOT SCALE: 1
SIZE: ANSI D
FILE NUMBER: .
FILE NAME: FP04a_G001.dwg

U.S. ARMY CORPS OF ENGINEERS
AFGHANISTAN DISTRICT
APO AE 09356

SITE ADAPT DESIGN
FP04a - GUARD TOWER
WITH CONCRETE WALK & FENCE

TITLE SHEET AND SCHEDULE OF DRAWINGS

SHEET IDENTIFICATION
G-001
SHEET 1 OF 10

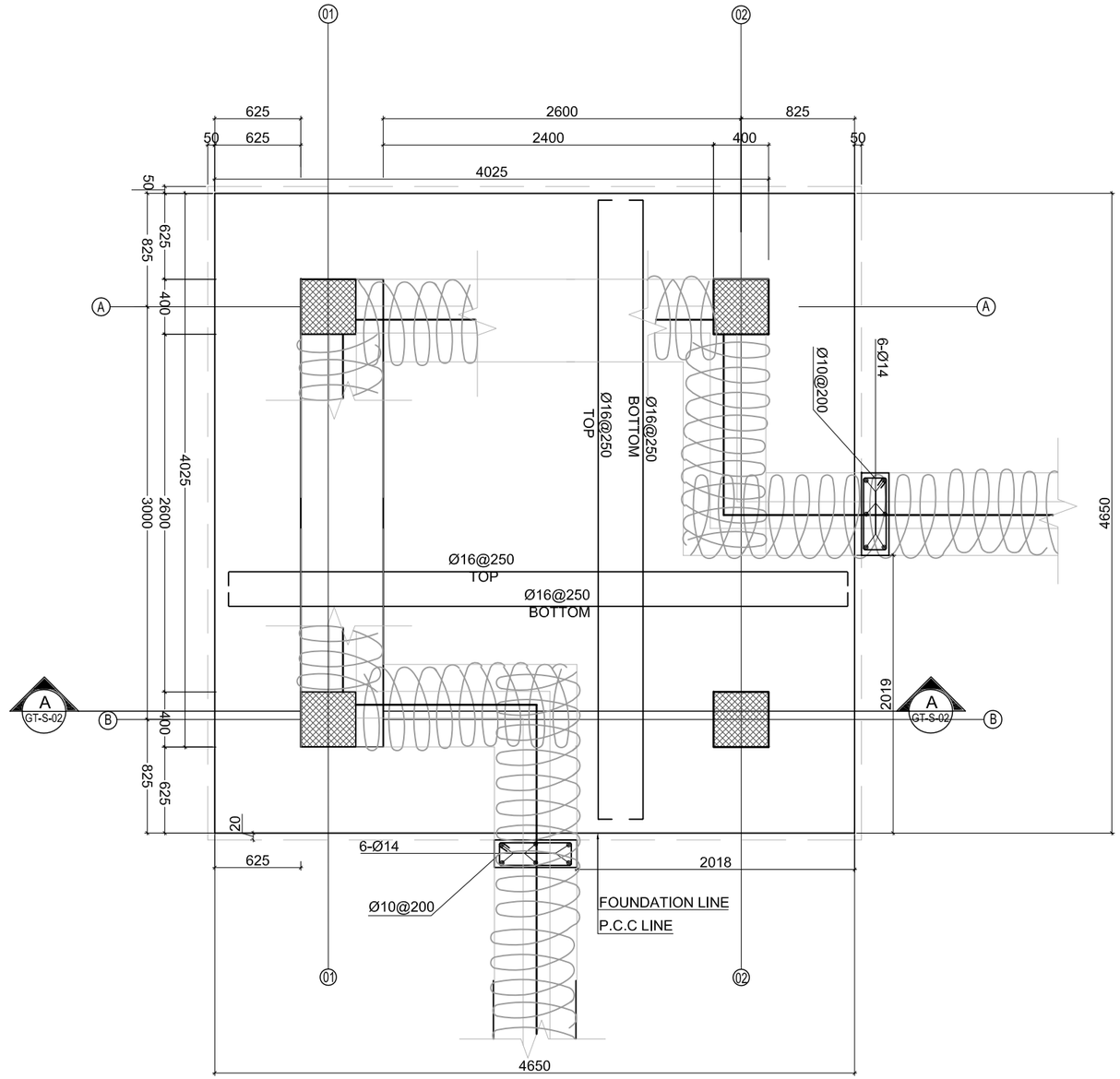

A S-101 FOUNDATION PLAN

SCALE 1:20

NOTES:

1- ALL DIMENSIONS ARE IN MM UNLESS OTHERWISE SPECIFIED.

2- THE FOUNDATION SHALL FOUNDED ON MINIMUM 95% COMPACTED SOIL .

3- THE COMPACTED SOIL SHALL MEET THE GEOTHECNICAL REQUIREMENTS.

4- THE STEEL GRADE SHALL BE Fy=60 KSI(4220 Kg/cm^2).

5- FOR CAST-IN-PLACE STRUCTURAL CONCRETE,MINIMUM 28 DAYS, CYLINDER Strength'c=4000PSI (280Kg/cm^2).

6- CONTROL JOINT FOR THE SLAB ON GRADE SHALL BE DONE EVERY MAXIMUM 4000 MM.

7- THE GEOTECHNICAL ANALYSIS FOR THIS PROJECT IS THE RESPONSIBILITY OF THE CONTRACTOR AWARDED THE WORK. AN ASSUMED ALLOWABLE SOIL BEARING CAPACITY OF 73,5 kPa (1500 psf) HAS BEEN ASSUMED IN THE STRUCTURAL ANALYSIS OF THE BUILDING HEREIN AND SHALL BE CONFIRMED AND VERIFIED AS PART OF THE GEOTECHNICAL INVESTIGATION. VALUES WHICH DO NOT MEET THE REQUIREMENTS INDICATED ON THE BASIS OF DESIGN SHEET SHALL BE IMMEDIATELY BROUGHT TO THE ATTENTION OF THE CONTRACTING OFFICER FOR CONSIDERATION AND DETERMINATION OF THE NEXT APPROPRIATE COURSE OF ACTION.

TABLE: COLUMN DOWELS SIZE			
Ø A (MM)	B (MM)	L (A+B)	C (MM)
14 250	1650	1900	700
16 300	1750	2050	800
20 300	1950	2250	1000
22 350	2050	2400	1100

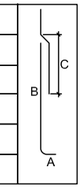

NOTE: DOWELS - SAME SIZE AND QUANTITY AS VERTICAL REINFORCING.

US Army Corps of Engineers
AFGHANISTAN ENGINEER DISTRICT

MARK	DESCRIPTION	DATE	APPR.
-	ISSUED FOR CONSTRUCTION	01/31/2012	

DESIGNED BY: S.HOSKINS
DWN BY:
CKD BY:
SUBMITTED BY: M. HOAGUE
PLOT SCALE: 1:1
PLOT DATE:
DATE: 01/31/2012
SOLICITATION NO.:
CONTRACT NO.:
FILE NUMBER:
SIZE: ANSI D
FILE NAME: FP04a_S-101.dwg

U.S. ARMY CORPS OF ENGINEERS
AFGHANISTAN DISTRICT
APO AE 09356

SITE ADAPT DESIGN
FP04a - GUARD TOWER
WITH CONCRETE WALK & FENCE

FOUNDATION PLAN & SECTION

SHEET IDENTIFICATION
S-101
SHEET 2 OF 10

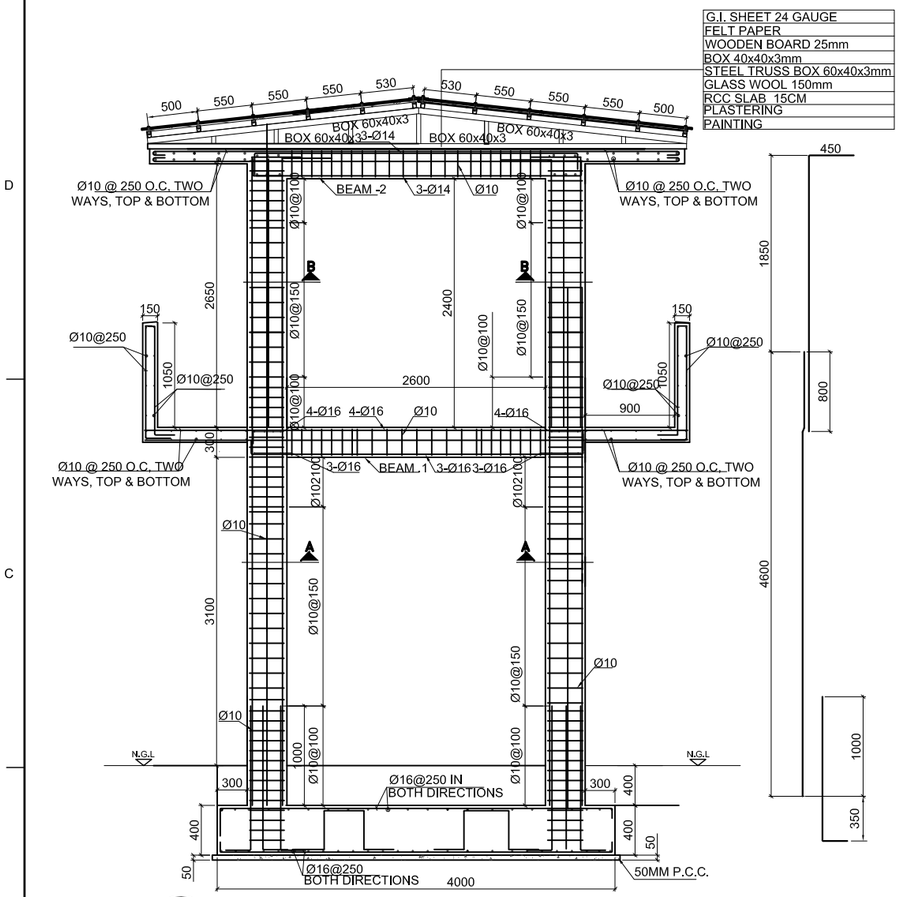

1 FRAME A-A
S-102 SCALE 1:30

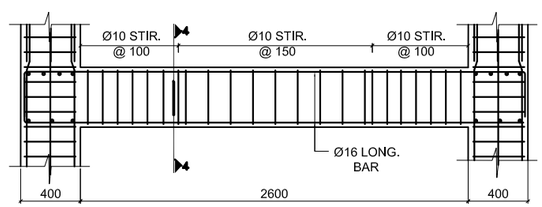

2 BEAM-1 TYPICAL FLOOR BEAM L-SECTION
S-102 SCALE 1:20

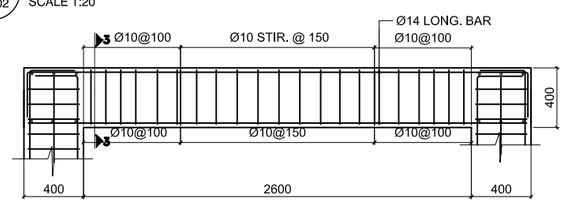

3 BEAM-2 TYPICAL ROOF BEAM L-SECTION
S-102 SCALE 1:20

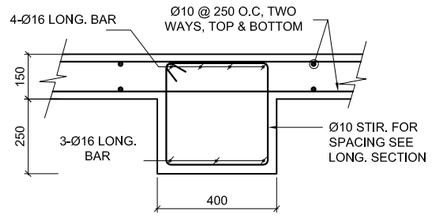

4 SECTION 4-4
S-102 SCALE 1:10

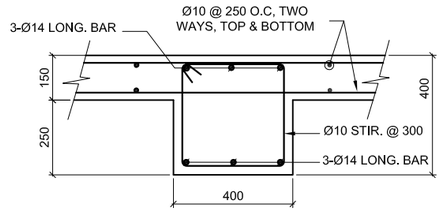

5 SECTION -3-3
S-102 SCALE 1:10

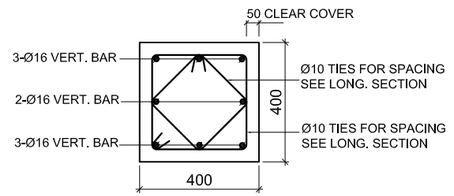

6 SECTION B-B
S-102 SCALE 1:10

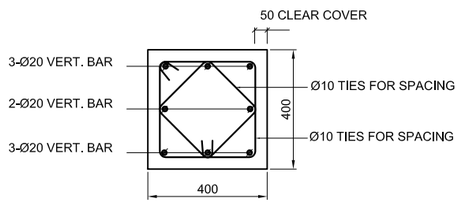

7 SECTION A-A
S-102 SCALE 1:10

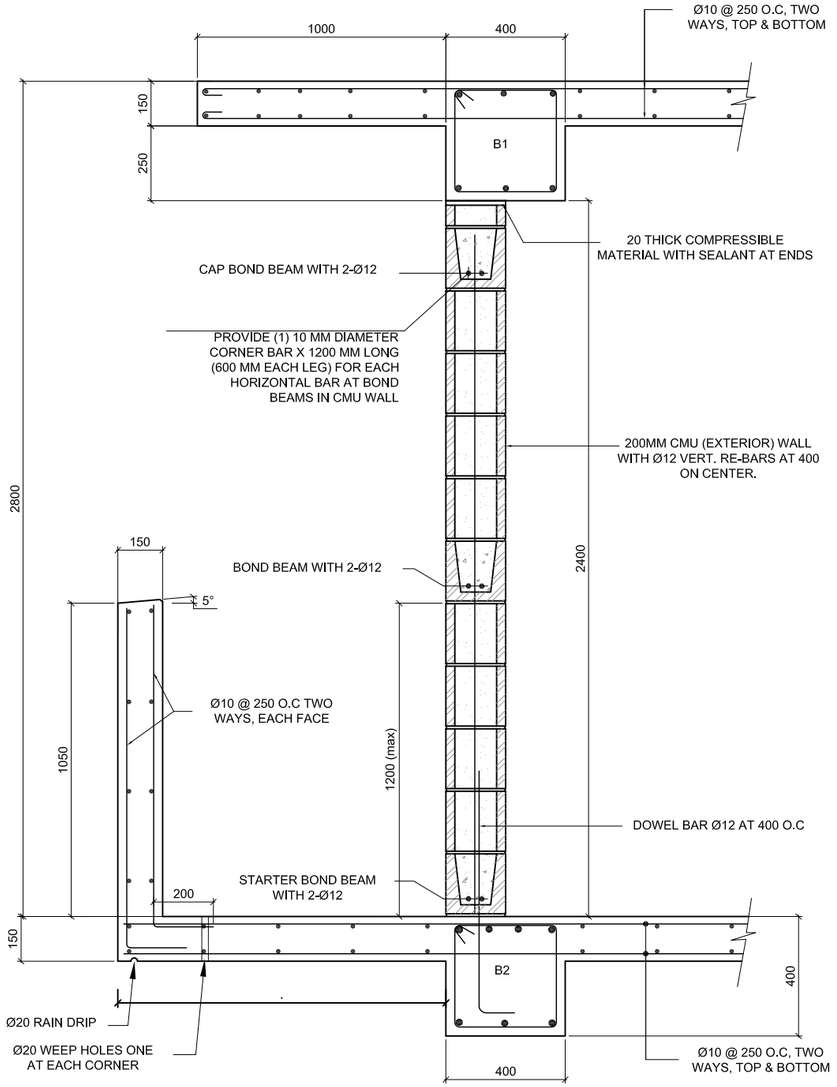

8 TYPICAL CMU WALL & PARAPET WALL SECTION
S-102 SCALE 1:10

NOTES:

1- ALL DIMENSIONS ARE IN MM UNLESS OTHERWISE SPECIFIED.
2-THE FOUNDATION SHALL FOUNDED ON MINIMUM 95% COMPACTED SOIL 3-THE COMPACTED SOIL SHALL MEET THE GEOMETRICAL REQUIREMENTS.
4-THE STEEL GRADE SHALL BE Fy=60 KSI(4220Kg/cm^2).
5-FOR CAST-IN-PLACE STRUCTURAL CONCRETE,MINIMUM 28 DAYS, CYLINDER STRENGTH f'c=4000PSI (280Kg/cm^2).
6-ALL CELLS OF CMU WALL ARE FULLY GROUTED WITH Ø12MM RE-BARS AT 40 CM ON CENTER.

US Army Corps of Engineers
AFGHANISTAN ENGINEER DISTRICT

MARK	DESCRIPTION	DATE	APPR.
1	ISSUED FOR CONSTRUCTION.	01/31/2012	

DESIGNED BY: S.GHOGHOS
DRWN BY: CAD
SUBMITTED BY: M. HOAGUE
CKD BY:
PLOT SCALE:
PLOT DATE:
SIZE: ANSI D
FILE NAME: FP04a_S-102.dwg
DATE: 01/31/2012
SOLICITATION NO.:
CONTRACT NO.:
FILE NUMBER:

U.S. ARMY CORPS OF ENGINEERS
AFGHANISTAN DISTRICT
APO AE 09356

SITE ADAPT DESIGN
FP04a - GUARD TOWER
WITH CONCRETE WALK & FENCE

SECTIONS & ELEVATIONS

SHEET IDENTIFICATION
S-102
SHEET 3 OF 10

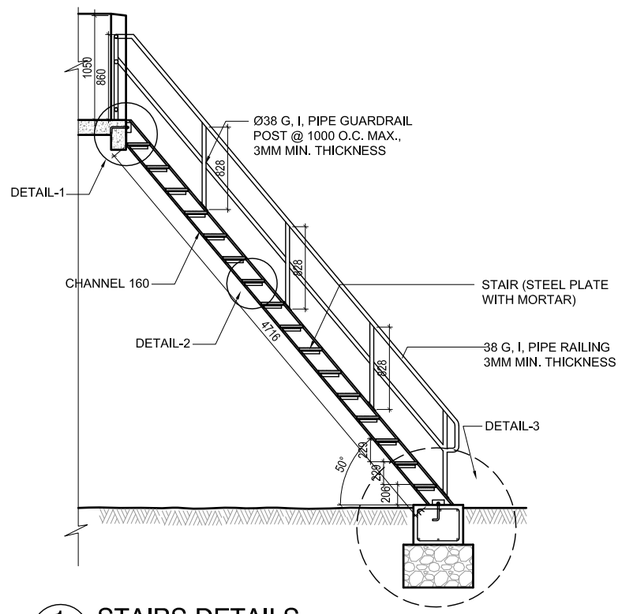

1 STAIRS DETAILS
S-103 SCALE 1:30

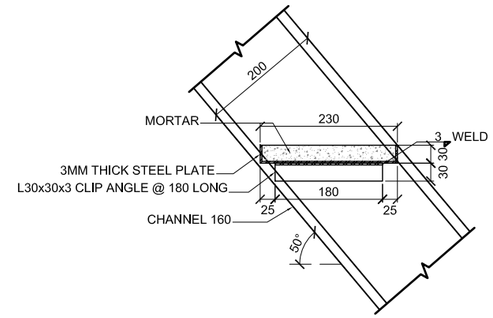

4 DETAILS - 2
S-103 SCALE 1:5

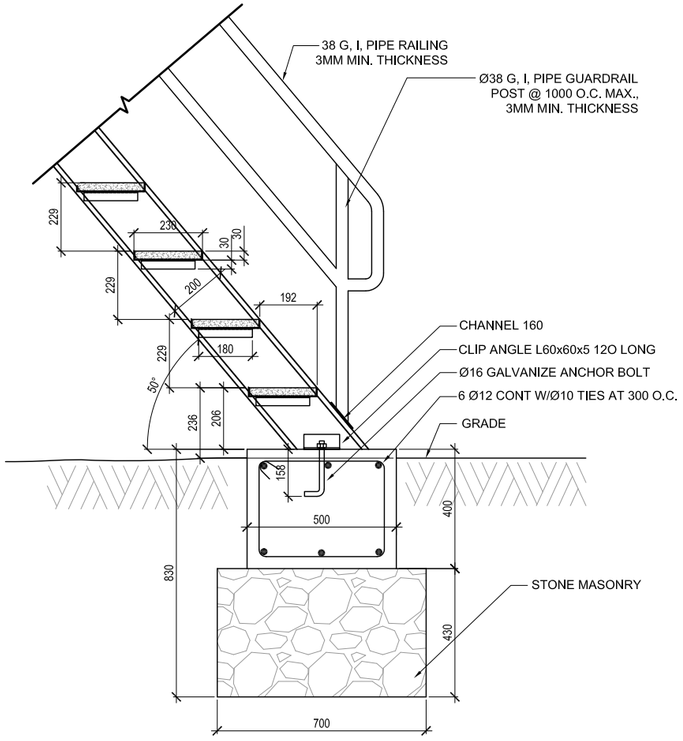

3 DETAIL - 3
S-103 SCALE 1:5

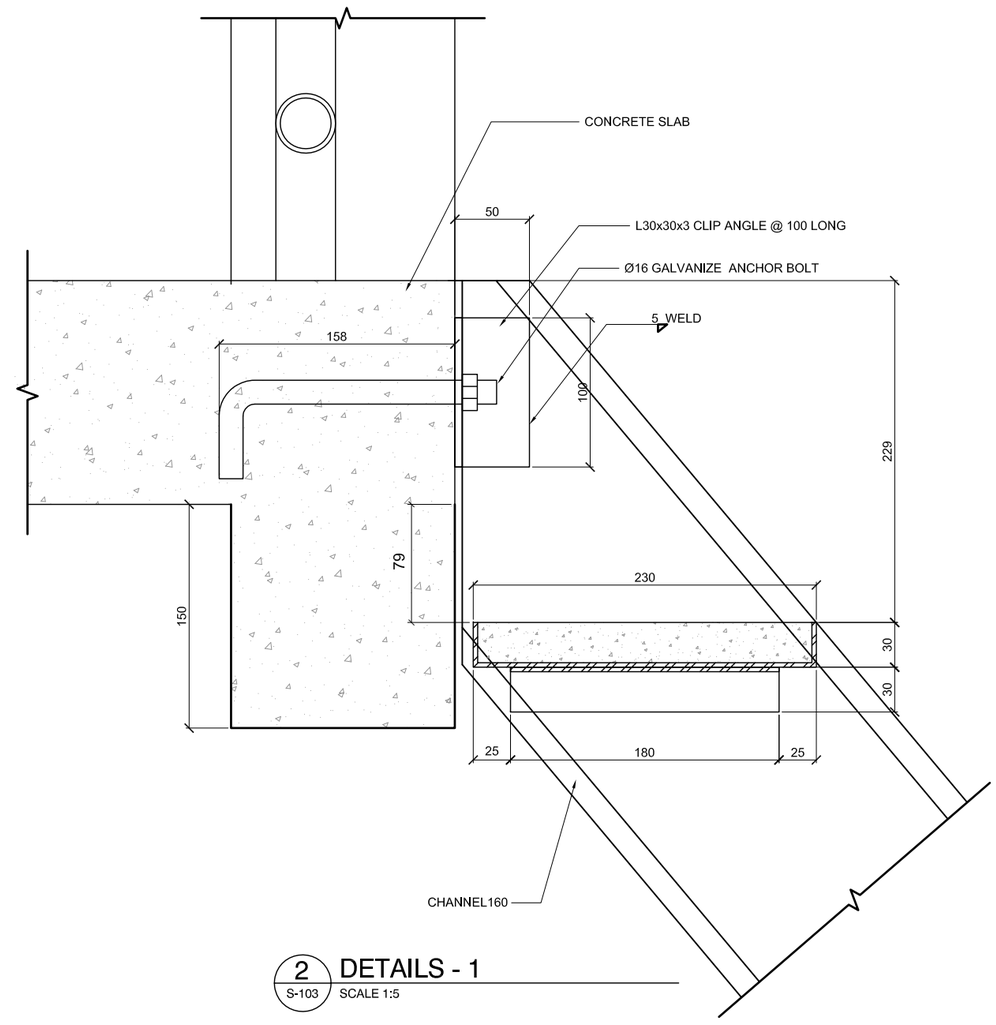

2 DETAILS - 1
S-103 SCALE 1:5

US Army Corps of Engineers
AFGHANISTAN ENGINEER DISTRICT

MARK	DESCRIPTION	DATE	APPR.
1	ISSUED FOR CONSTRUCTION	01/31/2012	

DESIGNED BY: S.GROOMS
DWN BY: C4D
CKD BY:
SUBMITTED BY: M. HOAGUE
PLOT SCALE: 1:1
SIZE: ANSI D
DATE: 01/31/2012
SOLICITATION NO.:
CONTRACT NO.:
PLOT DATE:
FILE NAME: FP04a_S-103.dwg
FILE NUMBER:

U.S. ARMY CORPS OF ENGINEERS
AFGHANISTAN DISTRICT
APO AE 09356

SITE ADAPT DESIGN
FP04a - GUARD TOWER
WITH CONCRETE WALK & FENCE

STAIR DETAILS

SHEET IDENTIFICATION
S-103
SHEET 4 OF 10

GENERAL NOTES:

A. ALL DIMENSIONS ARE IN MM UNLESS OTHERWISE SPECIFIED.
B. ALL LEVELS ARE IN METER (M) UNLESS OTHERWISE SPECIFIED
C. ALL EXTERIOR WALLS ARE 200MM C.M.U.
D. EXTERIOR WALLS TO BE COLORED STUCCO.
E. ALL ROOFS ARE 24 GAUGE GALVANIZED STEEL CORRUGATED SHEET.
F. ALL WINDOWS ARE 16MM.LAMINATED GLASS GLAZING.
G. FOR WALL AND ROOF INSULATION SEE SHEET CO-A-02.

KEY NOTES: (X)

1. TWO-PIECE WALL THIMBLE AND TRIM PLATE FOR WOOD BURNING STOVE CHIMNEY PIPE.

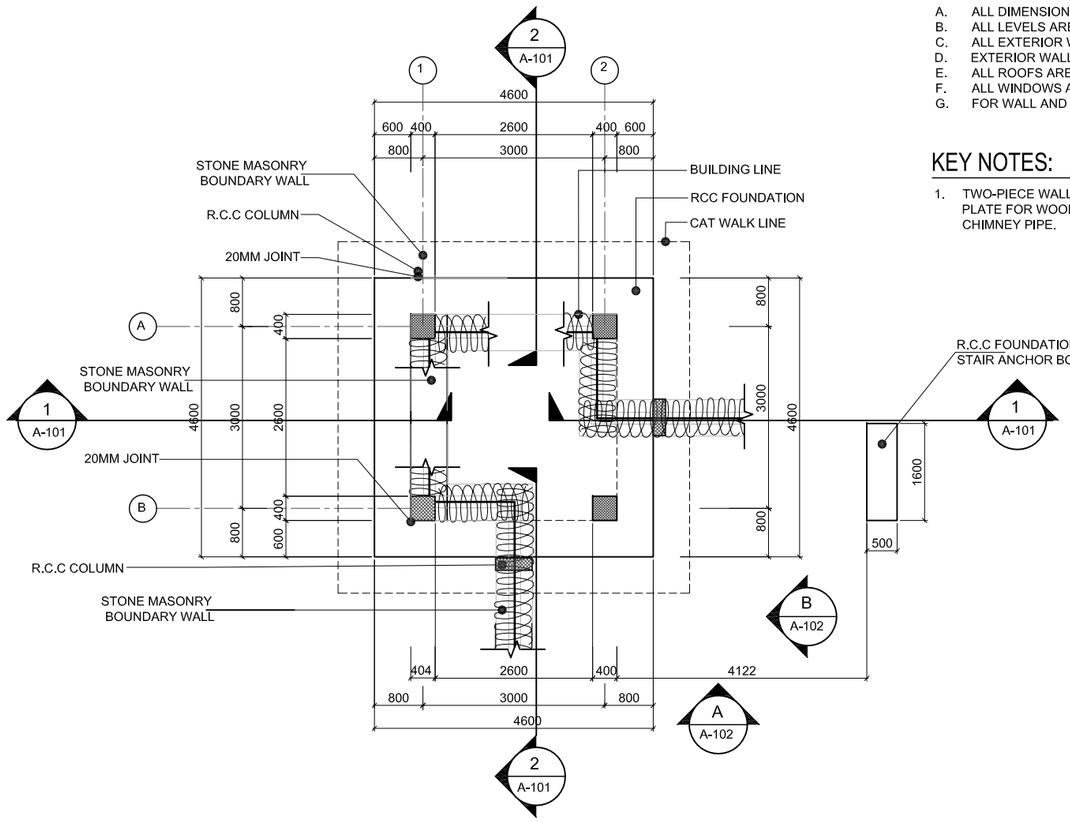

1 A-101 TYPICAL FOUNDATION PLAN WITH RELATION TO WALL
SCALE 1:50

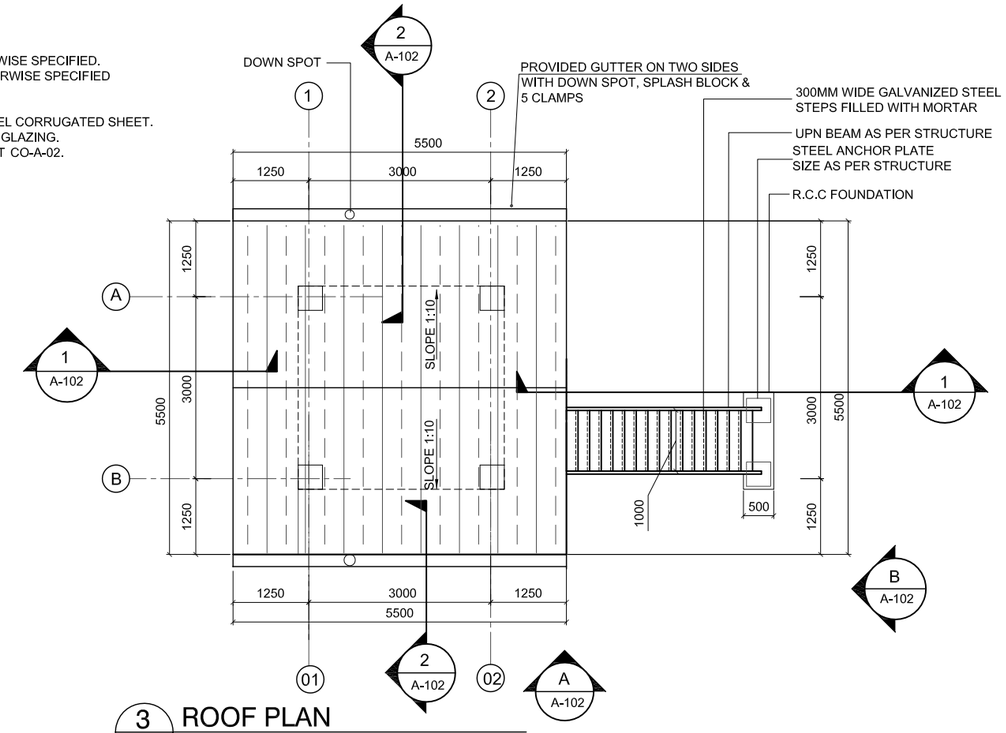

3 A-101 ROOF PLAN
SCALE 1:50

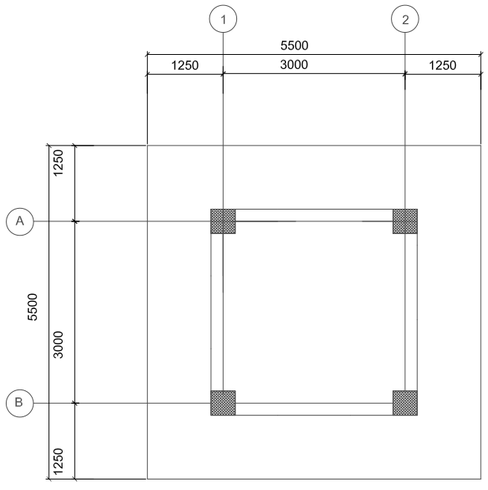

2 A-101 REFLECTED CEILING PLAN
SCALE 1:50

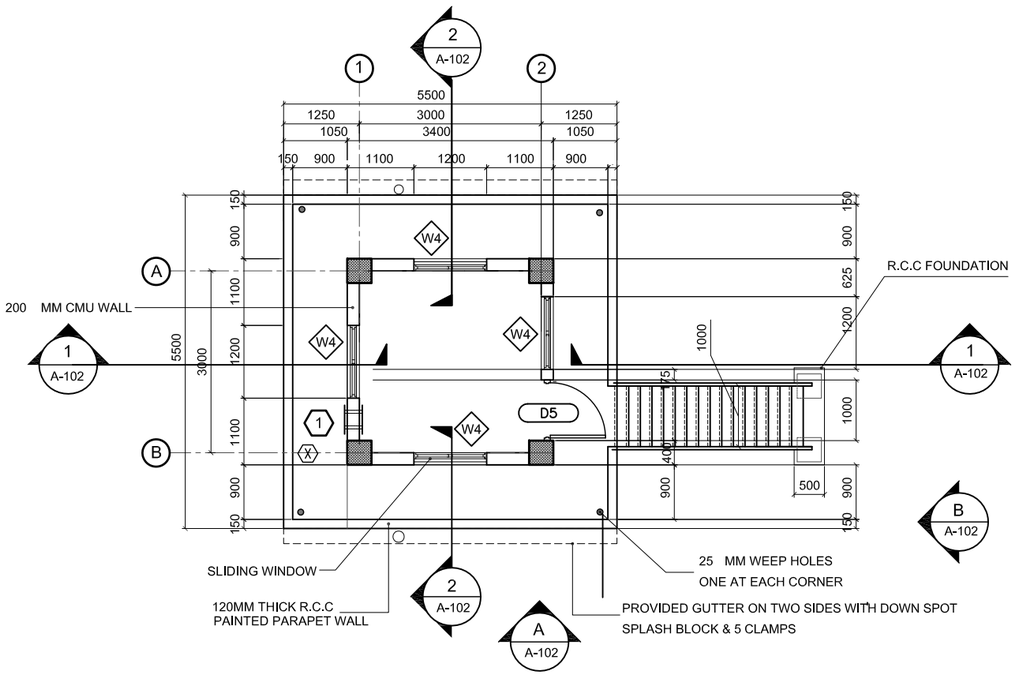

4 A-101 FIRST FLOOR PLAN
SCALE 1:50

US Army Corps of Engineers
AFGHANISTAN ENGINEER DISTRICT

MARK	DESCRIPTION	DATE	APPR.
1	ISSUED FOR CONSTRUCTION.	01/31/2012	

DESIGNED BY: S.CROOKS
DWN BY: CAD
CKD BY:
SUBMITTED BY: M. HOAGUE
PLOT SCALE: 1:1
PLOT DATE:
SIZE: ANSI D
FILE NAME: FP04A_A-101.dwg
DATE: 01/31/2012
SOLICITATION NO.:
CONTRACT NO.:
FILE NUMBER:

U.S. ARMY CORPS OF ENGINEERS
AFGHANISTAN DISTRICT
APO AE 09356

SITE ADAPT DESIGN
FP04a - GUARD TOWER
WITH CONCRETE WALK & FENCE

FOUNDATION, FLOOR & ROOF PLANS

SHEET IDENTIFICATION
A-101
SHEET 5 OF 10

C:\users\n2aenrad\documents\pwwork1\d0435247\FP04a_A-101 .dwg, FP04a_A-101, 2/23/2012 10:52:50 AM, Adobe PDF.pc3

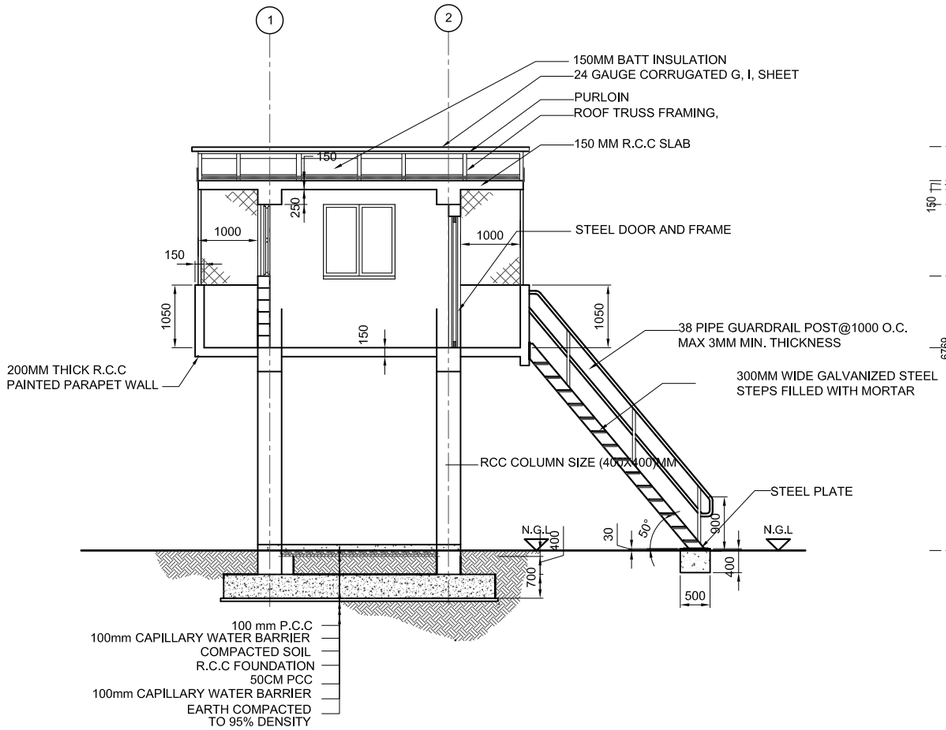

1 A-102 **SECTION 1-1**
SCALE 1:50

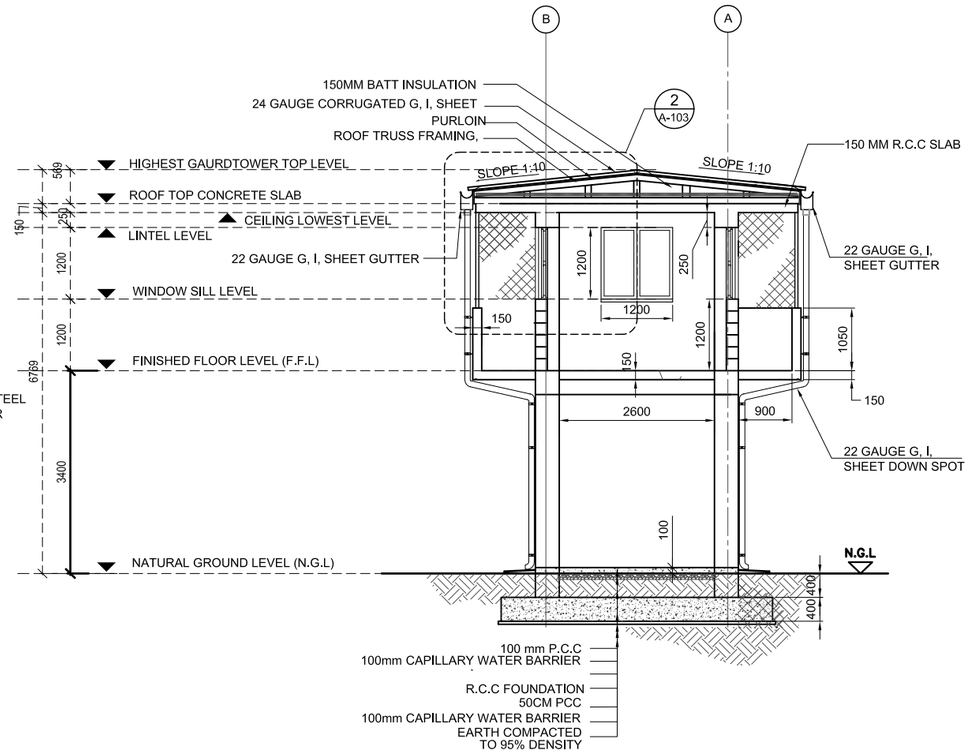

3 A-102 **SECTION 2-2**
SCALE 1:50

NOTES:

1. PROVIDE WINDOW UNITES MEETING UL 752,LEVEL 5, BUT NOT LESS THAN 16MM LAMINATED SINGLE GLAZED. THIS STANDARD SHALL APPLY TO ALL WINDOW UNITES WITHIN GUARD SHACK, GUARD HOUSE , GUARD TOWER , GUARDROOMS & RECEPTION BUILDING IN ANA COMPOUND.
2. THE WINDOWS SHOULD BE SLIDING .

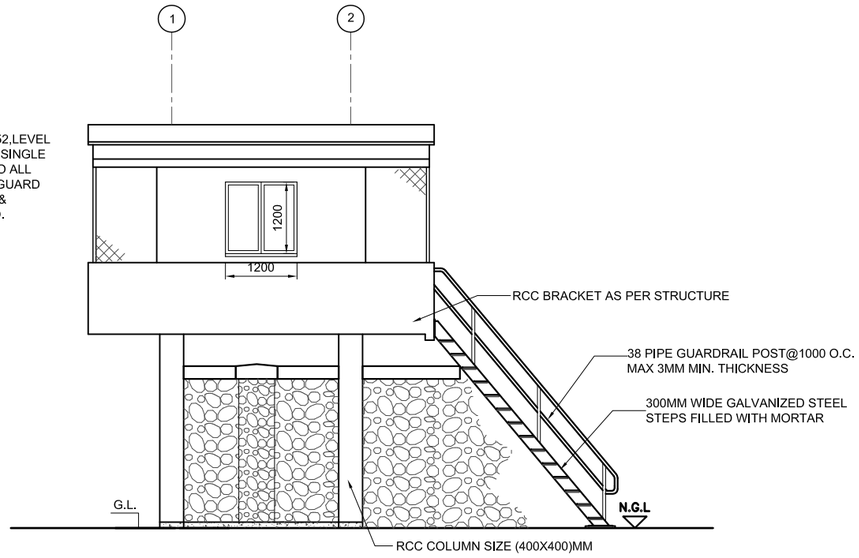

3 A-102 **ELEVATION-A**
SCALE 1:50

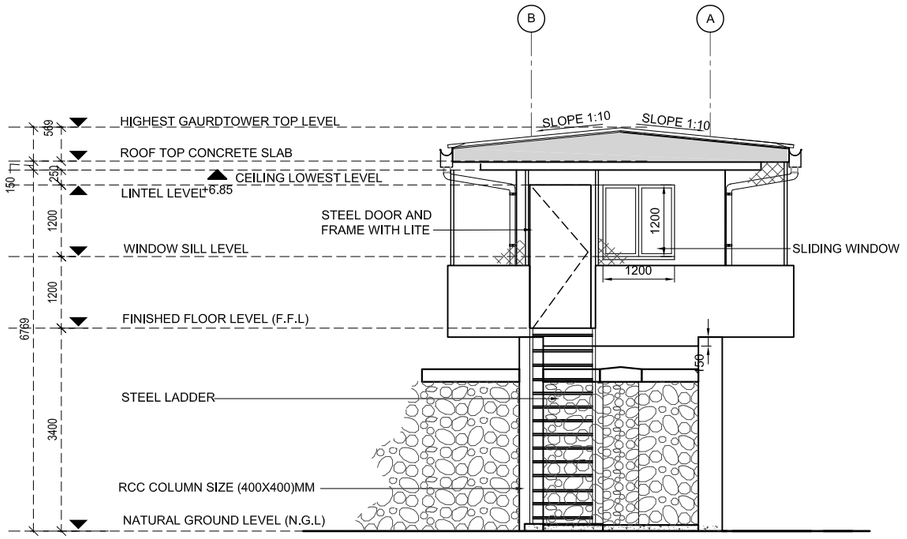

4 A-102 **ELEVATION-B**
SCALE 1:50

US Army Corps of Engineers
AFGHANISTAN ENGINEER DISTRICT

MARK	DESCRIPTION	DATE	APPR.
1	ISSUED FOR CONSTRUCTION	01/31/2012	

DESIGNED BY: S.GROOMS
DWN BY: CAD
CKD BY:
SUBMITTED BY: M. HOAGUE
DATE: 01/31/2012
SOLICITATION NO.:
CONTRACT NO.:
FILE NUMBER:
PLOT DATE:
PLOT SCALE:
SIZE: ANSI D
FILE NAME: FP04a_A-102.dwg

U.S. ARMY CORPS OF ENGINEERS
AFGHANISTAN DISTRICT
APO AE 09356

SITE ADAPT DESIGN
FP04a - GUARD TOWER
WITH CONCRETE WALK & FENCE

SECTIONS & ELEVATIONS

SHEET IDENTIFICATION
A-102
SHEET 6 OF 10

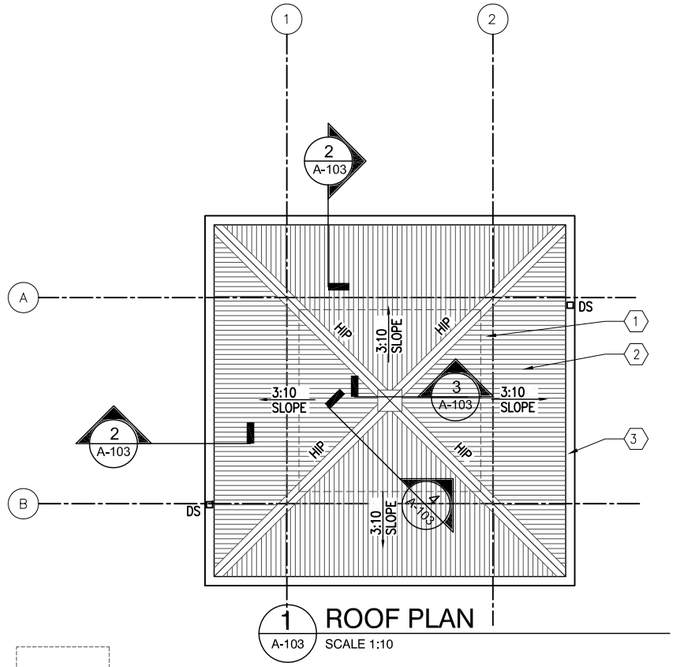

1 A-103 ROOF PLAN
SCALE 1:10

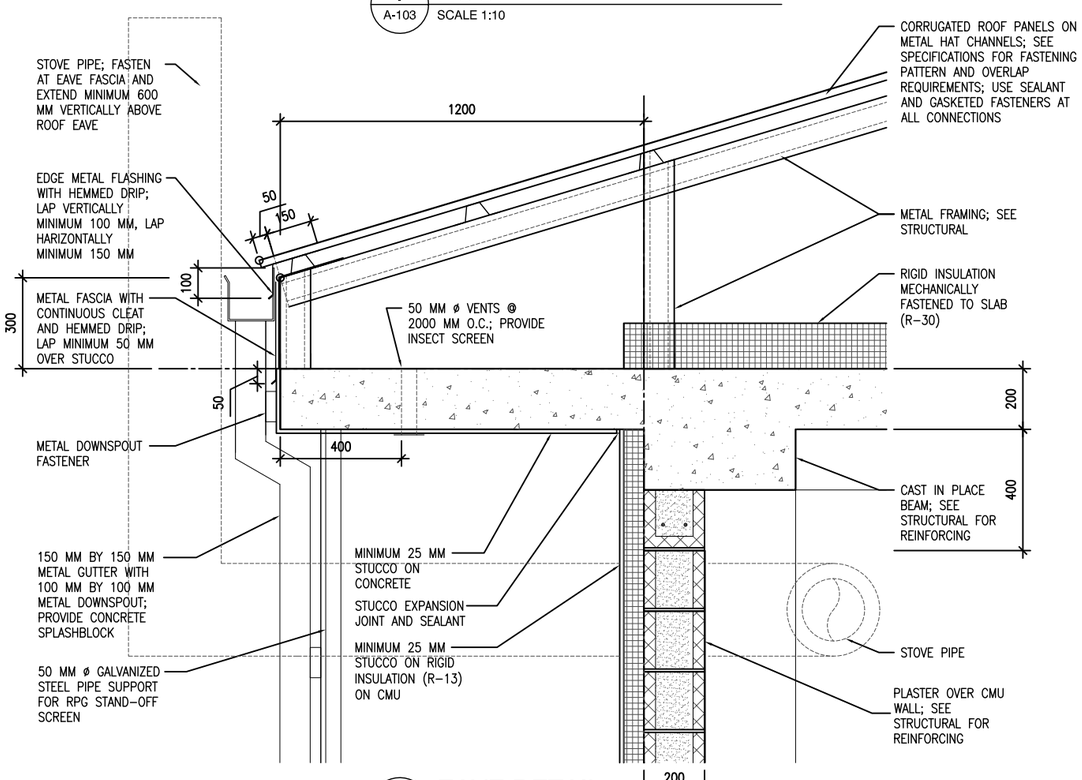

2 A-103 EAVE DETAIL
SCALE 1:10

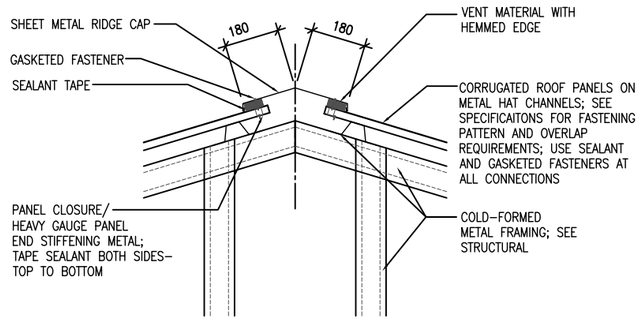

3 A-103 RIDGE VENT DETAIL
SCALE 1:10

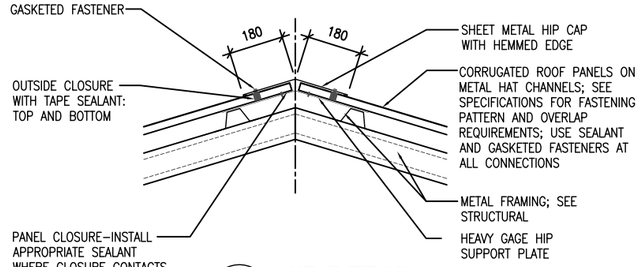

4 A-103 HIP DETAIL
SCALE 1:10

KEY NOTES:

1. LINE OF BUILDING WALL, BELOW
2. CORRUGATED METAL ROOF PANELS ON COLD-FORMED METAL FRAMING
3. METAL GUTTER

LEGEND:

(X) KEY NOTE

LINEAR DIMENSIONS SHOWN ARE IN MILLIMETERS (MM), UNLESS OTHERWISE NOTED

500 200 100 0 500 1000

SCALE: 1 : 10

US Army Corps of Engineers
AFGHANISTAN ENGINEER DISTRICT

MARK	DESCRIPTION	DATE	APPR.
1	ISSUED FOR CONSTRUCTION:	01/01/2012	

DESIGNED BY: S.BROOKS
DRAWN BY: CHD
CKD BY:
SUBMITTED BY: M. HOAGUE
PLOT SCALE: 1:1
PLOT DATE:
FILE NAME: FP04A_A103.dwg
SIZE: ANSI D
DATE: 01/01/2012
SOLICITATION NO.:
CONTRACT NO.:
FILE NUMBER:

U.S. ARMY CORPS OF ENGINEERS
AFGHANISTAN DISTRICT
APO AE 09356

SITE ADAPT DESIGN
FP04a - GUARD TOWER
WITH CONCRETE WALK & FENCE

ROOF PLAN AND DETAILS

SHEET IDENTIFICATION
A-103
SHEET 7 OF 10

C:\users\n2aenrad\documents\pwwork1\d0435247\FP04a_A-103 .dwg, FP04a_A-103, 2/23/2012 10:56:36 AM, Adobe PDF.pc3

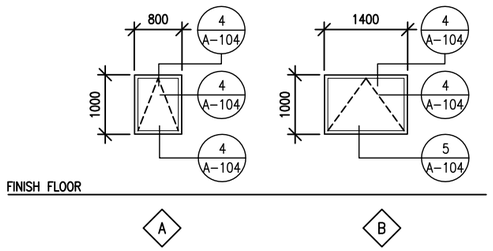

1 A-104 **WINDOW TYPES**
SCALE: 1:50

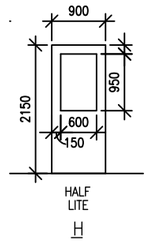

2 A-104 **DOOR TYPE**
SCALE: 1:50

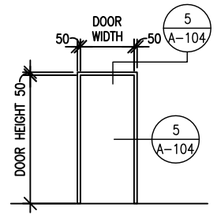

3 A-104 **FRAME TYPE**
SCALE: 1:50

WINDOW TYPES NOTES:

1. ALL EXTERIOR WINDOWS SHALL BE WOOD WITH INSECT SCREENS. WINDOWS SHALL BE COMMERCIAL GRADE.
2. GLAZING SHALL BE ACRYLIC SHEET.

DOOR TYPES NOTES:

1. EXTERIOR METAL DOORS AND FRAME COLORS SHALL MATCH ADJACENT WALL COLORS AS SELECTED BY THE CONTRACTING OFFICER.
2. HARDWARE SHALL BE HEAVY DUTY, COMMERCIAL GRADE, STAINLESS STEEL WITH A MATTE FINISH.
3. FRAMES, EXCEPT FIRE-RATED FRAMES, SHALL BE MOUNTED AND ADJUSTED IN ACCORDANCE WITH MANUFACTURER'S INSTRUCTIONS. FRAMES SHALL BE FASTENED WITH MINIMUM OF THREE FASTENING POINTS PER SIDE AT REGULAR INTERVALS.
4. DIMENSIONS SHOWN ON DOOR SCHEDULE ARE BASED UPON MODULAR MASONRY (OR ROUGH OPENING), HEIGHT OF 2200mm FOR STANDARD PERSONNEL DOORS. CONTRACTOR SHALL COORDINATE WITH DOOR SUPPLIER TO ENSURE THAT DIMENSIONS OF DOORS AND FRAMES PROVIDED ARE COMPATIBLE WITH DOOR OPENING DIMENSIONS.

HARDWARE TYPES:

HW-6 1-1/2 PR HINGES
1 EA LOCKSET,F04 ENTRY LOCK W/LEVERS. GRADE 1
1 EA DOOR CLOSER, C02061,LOW RESISTANCE
1 EA THRESHOLD J32130

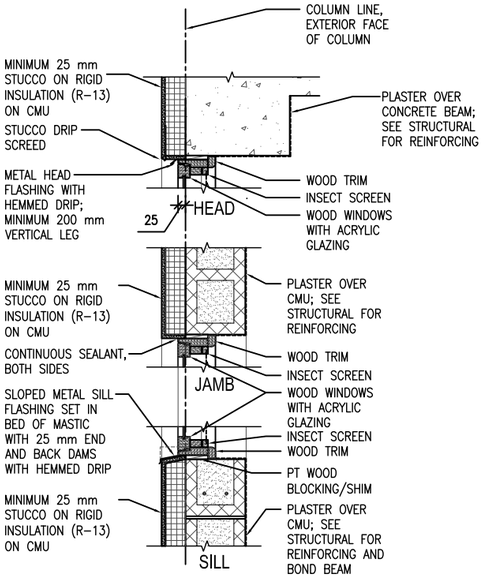

4 A-104 **WINDOW DETAILS**
SCALE: 1:10

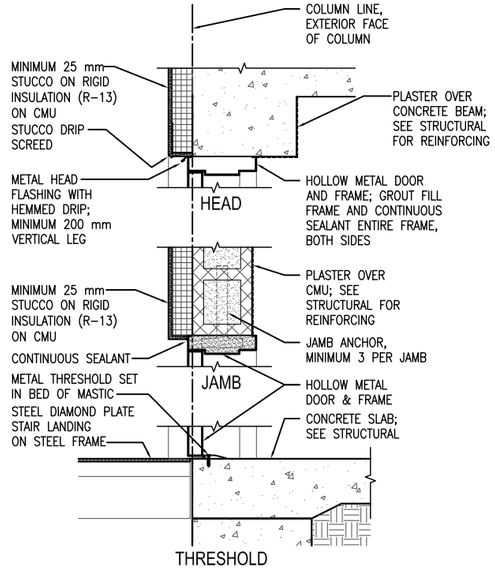

5 A-104 **EXTERIOR DOOR DETAILS**
SCALE: 1:10

500 200 100 0 500 1000
SCALE: 1 : 10

2500 1000 500 0 2500 5000
SCALE: 1 : 50

US Army Corps of Engineers
AFGHANISTAN ENGINEER DISTRICT

MARK	DESCRIPTION	DATE	APPR.
1	ISSUED FOR CONSTRUCTION	01/31/2012	

DESIGNED BY: S.CROOKS
DWN BY: CAD
CHD BY:
SUBMITTED BY: M. HOAGUE
PLOT SCALE:
PLOT DATE:
FILE NAME: FP04A_A-104.dwg
DATE: 01/31/2012
SOLICITATION NO.:
CONTRACT NO.:
FILE NUMBER:

U.S. ARMY CORPS OF ENGINEERS
AFGHANISTAN DISTRICT
APO AE 09356

SITE ADAPT DESIGN
FP04a - GUARD TOWER
WITH CONCRETE WALK & FENCE

DOOR, WINDOW & FINISH TYPES AND DETAILS

SHEET IDENTIFICATION
A-104
SHEET 8 OF 10

PANEL NAME: LP#1

SUPPLY FROM: POWER PLANT (MDP) — SURFACE — MOUNTED — 12,000 — ASYM. A.I.C. MIN.

AMP. MAIN LUGS (OR): 32 — AMP. MAIN BREAKER: 32 — AMP. TRIP

CIRCUIT BREAKER ,WIRE,METAL CONDUIT — 380/220 VOLTS — 3 PHASE — 4 WIRE — 50 HZ — 32 AMP. BUS — CIRCUIT BREAKER ,WIRE,METAL CONDUIT

CKT. NO.	TRIP AMPS	NO. POLES	WIRE MM²	GND MM²	CONDUIT MM	LOAD SERVED	LOAD-K.V.A. A0	LOAD-K.V.A. B0	LOAD-K.V.A. C0	LOAD-K.V.A. A0	LOAD-K.V.A. B0	LOAD-K.V.A. C0	LOAD SERVED	CONDUIT MM	GND MM²	WIRE MM²	NO. POLES	TRIP AMPS	CKT. NO.
1	20	1	4	4	20	SEARCH LIGHT	1.25						SPARE	20	4	4	1	20	2
3	20	1	4	4	20	SPARE							SPARE	20	4	4	1	20	4
5	20	1	4	4	20	SPARE							SPARE				1	20	6
7	20	1				SPARE													
							1.25			0									

PER PHASE (KVA): A0 1.25 B0 0 C0 0

TOTAL CONN. LOAD 1.25 KVA. 100 % DEMAND = ESTIMATED DEMAND LOAD 1.25 KVA.

* MAIN BREAKER SHALL BE EARTH GROUND TYPE

FIXTURE MARK 'A'

SEALED BEAM SPOTLIGHT MOUNTED TO GUARD TOWER ROOF WITH 1000W HALOGEN NARROW SPOT PAR 56 LAMP. FIXTURE SHALL BE PROVIDED WITH TWIST LEVER CONTROL, MIN. 254MM DIAMETER LIGHT HEAD WORKING RANGE OF ½ MILE, RATED FOR OUTDOOR ROUGH SERVICE WITH ANTI-SHOCK LAMP HOLDER

LIGHTING FIXTURE SCHEDULE

FIXTURE MARK	STYLE NUMBER AND TYPE	NUMBER AND TYPE OF LAMPS	VOLTAGE	MOUNTING	NOTES
A	SEALED BEAM SPOTLIGHT MOUNTED TO GUARD TOWER ROOF WITH 1000W HALOGEN NARROW SPOT LAMP	(1) PAR 56 1000W HALOGEN NARROW SPOT LAMP	220V - 1Ø 50HZ	MOUNTED TO GUARD TOWER ROOF	SEE FIXTURE/TOWER DETAIL FOR SPOTLIGHT MOUNTING.

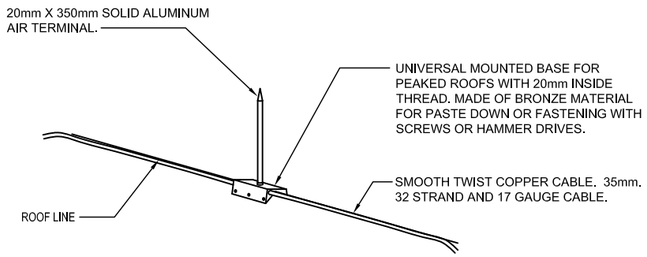

1 E-102 LIGHTNING PROTECTION AIR TERMINAL DETAIL
SCALE: N.T.S

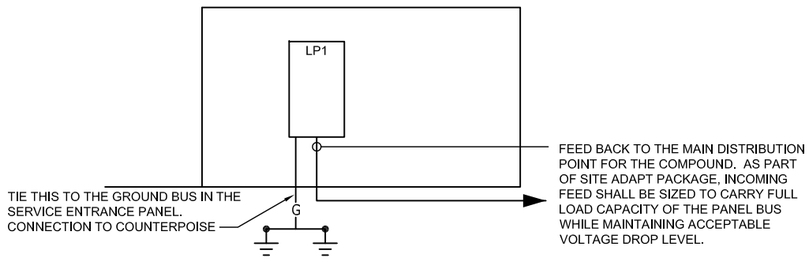

2 E-102 N.1 RISER DIAGRAM
SCALE: N.T.S

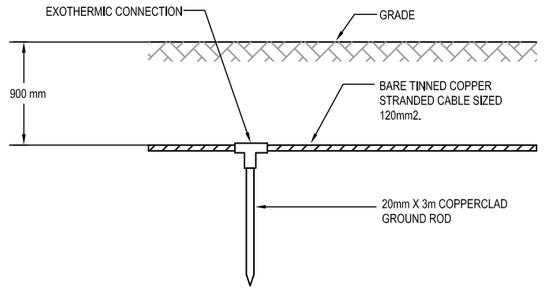

3 E-102 GROUND SYSTEM DETAIL - ELEVATION
SCALE: N.T.S

US Army Corps of Engineers
AFGHANISTAN ENGINEER DISTRICT

MARK	DESCRIPTION	DATE	APPR.
1	ISSUED FOR CONSTRUCTION	01/31/2012	

DESIGNED BY: S.CROOKS
DWN BY: CAD
CKD BY:
SUBMITTED BY: M. HRAGUE
DATE: 01/31/2012
SOLICITATION NO.:
CONTRACT NO.:
PLOT SCALE: 1:1
PLOT DATE:
FILE NUMBER:
SIZE: ANSI D
FILE NAME: FP04A-E-102.dwg

U.S. ARMY CORPS OF ENGINEERS
AFGHANISTAN DISTRICT
APO AE 09356

SITE ADAPT DESIGN
FP04a - GUARD TOWER
WITH CONCRETE WALK & FENCE

LIGHT FIXTURE SCHEDULE AND DETAILS

SHEET IDENTIFICATION
E-102
SHEET 10 OF 10

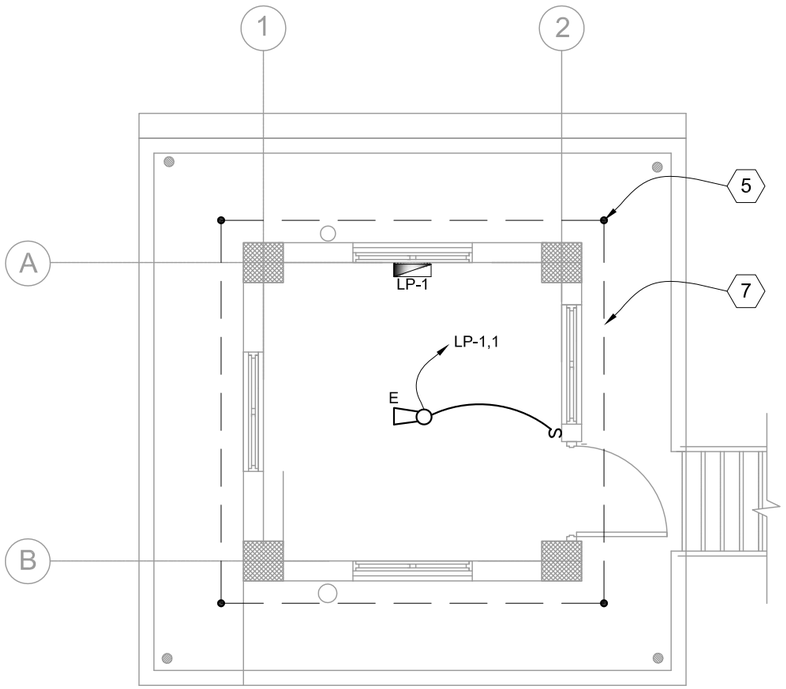

1 E-101 POWER & GROUNDING PLAN
SCALE 1:75

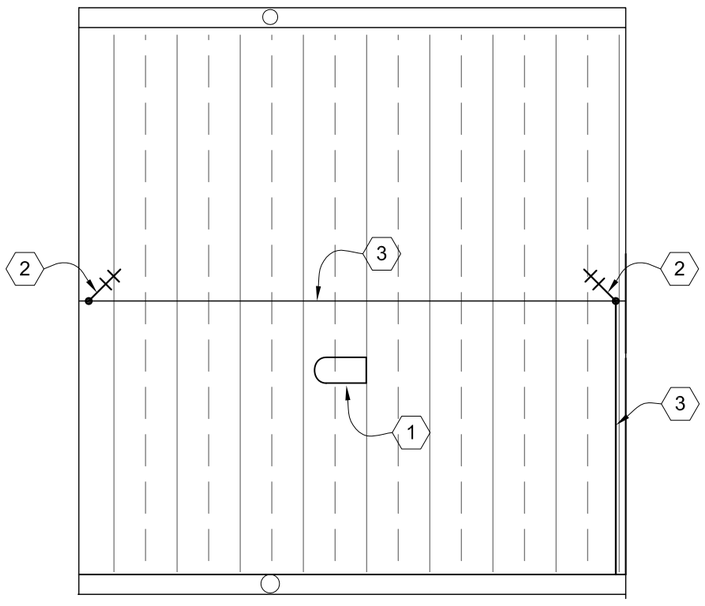

2 E-101 POWER & GROUNDING PLAN
SCALE 1:75

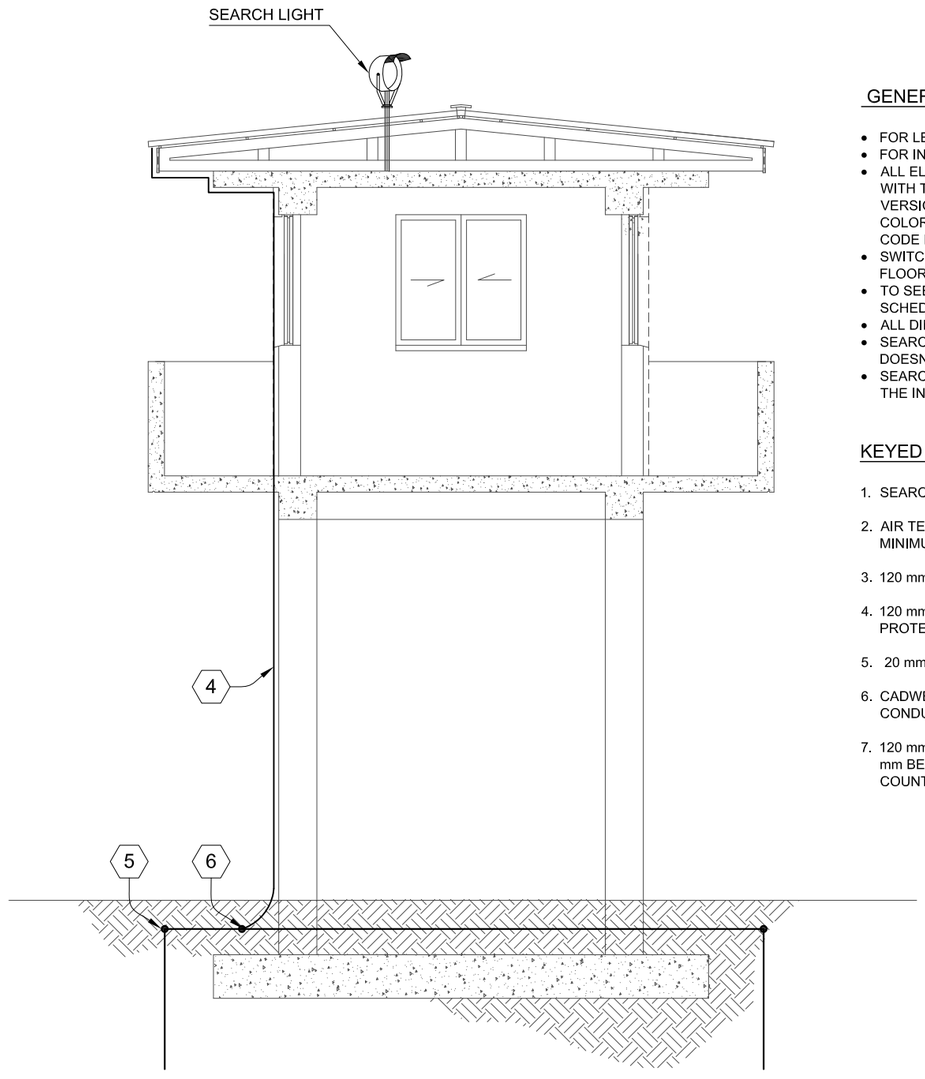

3 E-101 SEARCH LIGHT PLAN
SCALE 1:75

GENERAL NOTES:

- FOR LEGEND AND ABBREVIATION SEE DWG CO-E-01.
- FOR INSTALLATION DETAIL SEE DWG CO-E-02.
- ALL ELECTRICAL INSTALLATION SHALL BE ACCORDANCE WITH THE 2011 VERSION OF NATIONAL ELECTRICAL CODE ,IBC, IEEE COLOR BOOK AND OTHER CODE REGULATION CONCERN.
- SWITCHES SHALL BE MOUNTED 1300MM FROM FINISH FLOOR LINE (FFL).
- TO SEE SIZE OF WIRE AND CONDUIT REFER TO PANEL SCHEDULE AND ON SHEET E2.
- ALL DIMENSIONS ARE IN (mm).
- SEARCH LIGHT PENETRATION SHALL BE SEALED SO IT DOESN'T LEAK.
- SEARCH LIGHT SHALL BE MANUALLY OPERATED FROM THE INSIDE OF THE GUARD TOWER.

KEYED NOTES: (X)

1. SEARCH LIGHT
2. AIR TERMINAL . THE AIR TERMINALS SHALL BE 0.5 METERS MINIMUM HIGHER THAN THE TOP OF THE SEARCH LIGHT.
3. 120 mm 2 BARE COPPER LIGHTNING PROTECTION CABLE.
4. 120 mm 2 BARE COPPER DOWN CONDUCTOR FOR LIGHTNING PROTECTION SYSTEM.
5. 20 mm x 3000 mm GROUNDROD.
6. CADWELD CONNECTION OF LIGHTNING PROTECTION DOWN CONDUCTOR TO COUNTERPOISE.
7. 120 mm 2 BARE COPPER COUNTERPOISE AROUND BUILDING 700 mm BELOW GRADE. CONNECT BUILDING STRUCTURES TO COUNTERPOISE.

LINEAR DIMENSIONS SHOWN ARE IN MILLIMETERS (MM), UNLESS OTHERWISE NOTED

7500 1500 750 0 3750 7500

SCALE: 1 : 75

US Army Corps of Engineers
AFGHANISTAN ENGINEER DISTRICT

MARK	DESCRIPTION	DATE	APPR.
1	ISSUED FOR CONSTRUCTION	01/31/2012	

DESIGNED BY: S.CROOKS
DWN BY: CAD
CKD BY:
SUBMITTED BY: M. HOAGUE
PLOT SCALE:
SIZE: ANSI D
DATE: 01/31/2012
SOLICITATION NO.:
CONTRACT NO.:
FILE NUMBER:
FILE NAME: FP04A-E-101.dwg

U.S. ARMY CORPS OF ENGINEERS
AFGHANISTAN DISTRICT
APO AE 09356

SITE ADAPT DESIGN
FP04a - GUARD TOWER
WITH CONCRETE WALK & FENCE

RECEPTACLE, POWER GROUNDING AND LIGHTING PLAN

SHEET IDENTIFICATION
E-101
SHEET 9 OF 10

AFGHAN NATIONAL POLICE

STANDARD BUILDING DESIGNS

GUARD SHACK

SHEET INDEX

G1 COVER SHEET

S1 GENERAL NOTES
S2 DESIGN CRITERIA & SCHEDULES
S3 FOUNDATION & ROOF FRAMING PLANS
S4 SECTIONS AND DETAILS
S5 TYPICAL DETAILS

A1 FLOOR AND ROOF PLANS AND DETAILS
A2 EXTERIOR ELEVATIONS, BUILDING AND WALL SECTIONS
A3 DOOR, WINDOW & FINISH TYPES & DETAILS

E0 ELECTRICAL SYMBOLS AND ABBREVIATIONS
E1 LIGHTING AND POWER PLAN
E2 DETAILS
E3 LIGHT FIXTURE SCHEDULE
E4 PANEL SCHEDULES AND RISER DIAGRAM

US Army Corps of Engineers
Afghanistan Engineer District

SYMBOL	DESCRIPTION	DATE	APP'D

DESIGNED BY: JDS
DWN BY: JDS
CHK BY: JDS
DATE: 09-30-09
SUBMITTED BY: BAKER
FILE NO.: ANPSDG-001XXX

Michael Baker Jr., Inc
A unit of Michael Baker Corporation
Airside Business Park
100 Airside Drive
Moon Township, PA 15108
www.mbakercorp.com

AFGHAN NATIONAL POLICE
STANDARD DESIGN
GUARD SHACK

COVER SHEET

SHEET REFERENCE NUMBER:
G1

100% SUBMISSION

STRUCTURAL ABBREVIATIONS:

ACI	AMERICAN CONCRETE INSTITUTE
AISC	AMERICAN INSTITUTE OF STEEL CONSTRUCTION
ALT	ALTERNATE
ASTM	AMERICAN SOCIETY FOR TESTING AND MATERIALS
AWS	AMERICAN WELDING SOCIETY
ARCH	ARCHITECTURAL
B	BOTTOM
BLDG	BUILDING
BOTT	BOTTOM
℄	CENTER LINE
CFMF	COLD FORM METAL FRAME
CFS	COLD FORMED STEEL
CIP	CAST IN PLACE
CIPL	CAST-IN-PLACE LINTEL
CJ	CONTROL JOINT
CLR	CLEAR
CMU	CONCRETE MASONRY UNIT
COEFF	COEFFICIENT
COL	COLUMN
CONC	CONCRETE
CONT	CONTINUOUS
COORD	COORDINATE
CSJ	CONSTRUCTION JOINT
CTJ	CONTROL JOINT
DIA	DIAMETER
DIAG	DIAGONAL
DIM	DIMENSION
DWG	DRAWING
DWL	DOWEL
EA	EACH
ELEC	ELECTRICAL
ELEV	ELEVATION
EMBED	EMBEDMENT
EQUIV	EQUIVALENT
ETC	ET CETERA
EW	EACH WAY
EXT	EXTERIOR
FTG	FOOTING
GA	GAUGE
HORIZ	HORIZONTAL
HRS	HOURS
IBC	INTERNATIONAL BUILDING CODE
INT	INTERIOR
Kg	KILOGRAM
KIP	KIPS (1 KIP = 1,000 POUNDS)
kN	KILONEWTON
kPa	KILOPASCAL
L#	ANGLE (# INDICATES SIZE)
LLV	LONG LEG VERTICAL
M	METER
MAX	MAXIMUM
MBM	METAL BUILDING MANUFACTURER
MECH	MECHANICAL
MFG	MANUFACTURER
MID	MIDDLE
MIN	MINIMUM
MISC	MISCELLANEOUS
MM	MILLIMETER
MPa	MEGAPASCAL
MTL	METAL
MWFRS	MAIN WIND FORCE RESISTING SYSTEM
N	NEWTON
N	NORTH
N/A	NOT APPLICABLE
#	NUMBER SYMBOL FOR REBAR SIZE
NTS	NOT TO SCALE
OC	ON CENTER
OPNG	OPENING
P or PL	PLATE
PRE-ENG	PRE-ENGINEERED
REINF	REINFORCED
REQ'D	REQUIRED
SW	SHEAR WALL
SIM	SIMILAR
SPECS	SPECIFICATIONS
STD	STANDARD
STRUCT	STRUCTURAL
T	TOP
T/	TOP OF
T/ELEV	TOP ELEVATION
T&B	TOP AND BOTTOM
THK	THICK
TM	TRADE MARK
TYP	TYPICAL
UON	UNLESS OTHERWISE NOTED
VERT	VERTICAL
W	WIDTH
W/	WITH

GENERAL NOTES

1.0 THIS PROJECT HAS BEEN DESIGNED FOR THE WEIGHTS AND MATERIALS INDICATED ON THE SHEETS AND FOR THE LIVE LOADS INDICATED IN THE DESIGN DATA. IT IS THE CONTRACTOR'S RESPONSIBILITY TO DETERMINE ALLOWABLE CONSTRUCTION LOADS AND TO PROVIDE PROPER DESIGN AND CONSTRUCTION OF FALSEWORK, FORMWORK, STAGING, BRACING, SHEETING AND SHORING, ETC.

1.1 COORDINATE THESE SHEETS WITH THE ARCHITECTURAL, MECHANICAL, ELECTRICAL, PLUMBING, AND CIVIL SHEETS. ALL DIMENSIONS SHOWN ON THE SHEETS ARE MILLIMETERS UNLESS NOTED OTHERWISE.

1.2 THE CONTRACTOR SHALL VERIFY AND COORDINATE ALL FLOOR AND ROOF OPENING SIZES AND LOCATIONS, EQUIPMENT PAD SIZES AND LOCATIONS, ANCHOR BOLT LAYOUTS, ETC WITH EQUIPMENT SELECTED. THE CONTRACTOR SHALL MAKE ANY REQUIRED MODIFICATIONS AT NO ADDITIONAL COST.

1.3 THE CONTRACTOR SHALL REFER TO THE ARCHITECTURAL, MECHANICAL, ELECTRICAL AND PLUMBING SHEETS FOR SLEEVES, CURBS, INSERTS OR OPENINGS, ETC. NOT HEREIN INDICATED.

1.4 SLAB OPENINGS SMALLER THAN 250mm DIA TO BE CORE DRILLED IN FIELD UON. SEE MECHANICAL, ELECTRICAL AND PLUMBING SHEETS FOR LOCATIONS OF THESE OPENINGS.

1.5 WORK NOT INCLUDED ON THE SHEETS BUT IMPLIED TO BE SIMILAR TO THAT SHOWN AT CORRESPONDING PLACES ELSEWHERE ON THE SHEETS SHALL BE REPEATED.

1.6 IN CASE OF CONFLICT BETWEEN THE NOTES, DETAILS AND SPECIFICATIONS THE MOST RIGID REQUIREMENTS SHALL GOVERN.

1.7 SEE ARCHITECTURAL SHEETS FOR LOCATIONS OF MASONRY AND DRYWALL NON-LOAD BEARING PARTITIONS. PROVIDE COMPRESSIBLE FIRESAFING AT TOP OF WALL AS REQUIRED BY ARCHITECTURAL SHEETS.

1.8 COORDINATE FINISHED FLOOR DATUM ELEVATION 0.0m WITH THE CIVIL SHEETS.

2.0 FOUNDATION NOTES

2.1 THE GEOTECHNICAL ANALYSIS FOR THIS PROJECT IS THE RESPONSIBILITY OF THE CONTRACTOR AWARDED THE WORK. DESIGN VALUES USED IN THE STRUCTURAL ANALYSIS OF THE BUILDINGS HEREIN INDICATED HAVE BEEN ASSUMED AND SHALL BE CONFIRMED AND VERIFIED AS PART OF THE GEOTECHNICAL INVESTIGATION. VALUES WHICH DO NOT MEET THE REQUIREMENTS INDICATED ON SHEET S2 SHALL BE IMMEDIATELY BROUGHT TO THE ATTENTION OF THE CONTRACTING OFFICER FOR CONSIDERATION AND DETERMINATION ON THE NEXT APPROPRIATE COURSE OF ACTION.

2.2 SEE THE SPECIFICATION FOR ADDITIONAL REQUIREMENTS TO THOSE OUTLINED IN THE GEOTECHNICAL INVESTIGATION FOR EXCAVATION AND PREPARATION OF THE FOUNDATION AND THE SLAB ON GRADE SUBGRADE INCLUDING COMPACTION PROCEDURES.

2.3 EXCAVATIONS FOR FOOTINGS SHALL HAVE THE SIDES AND BOTTOMS TEMPORARILY LINED WITH 0.25mm POLYETHYLENE IF PLACEMENT OF CONCRETE DOES NOT OCCUR WITHIN 24 HRS OF THE EXCAVATION OF THE FOOTING.

2.4 FOUNDATION CONDITIONS NOTED DURING CONSTRUCTION WHICH DIFFER FROM THOSE DESCRIBED IN THE GEOTECHNICAL REPORT SHALL BE REPORTED TO THE GENERAL CONTRACTOR BEFORE FURTHER CONSTRUCTION IS ATTEMPTED. SEE PROJECT SPECIFICATIONS.

2.5 NO FOOTINGS OR SLABS SHALL BE POURED INTO OR AGAINST SUBGRADE CONTAINING FREE WATER, FROST, ICE OR LOOSE MATERIAL. FROST DEPTH ASSUMED TO BE 800MM

2.6 ALL SLAB-ON-GRADE, TRENCH BOTTOMS AND OTHER ON-GRADE INTERIOR HORIZONTAL SURFACES SHALL BE PLACED OVER A 0.25mm VAPOR RETARDER OVER A 100mm #57 STONE WATER BARRIER PLACED ON SUBGRADE PROPERLY PREPARED IN ACCORDANCE WITH THE CONTRACT SPECIFICATIONS. (UON)

2.7 SEE PLUMBING, ELECTRICAL & CIVIL SHEETS FOR REQUIRED UNDERSLAB UTILITIES.

2.8 SEE ARCHITECTURAL SHEETS FOR ALL WATERPROOFING DETAILS AND MATERIALS.

2.9 IF UNDERMINING OF FOOTINGS OCCURS, FILL VOIDS WITH 15MPa CONCRETE. DO NOT ATTEMPT TO REPLACE AND RECOMPACT SOIL.

3.0 CONCRETE

3.1 CONCRETE SHALL HAVE THE UNIT WEIGHT AND THE MINIMUM COMPRESSIVE STRENGTHS (f'c) AT 28 DAYS AS SHOWN IN THE CONCRETE MATERIALS SCHEDULE ON THIS SHEET. SEE SPECIFICATIONS FOR ADDITIONAL INFORMATION. ENTRAIN AIR TO PRODUCE TOTAL AIR CONTENT ACCORDING TO THE SPECIFICATIONS FOR CONCRETE EXPOSED TO FREEZING TEMPERATURES (EXTERIOR FOOTINGS, SLAB TURNDOWNS, EXTERIOR SLABS AND SLABS-ON-GRADE, EXTERIOR RETAINING WALLS, AND EXTERIOR GRADE BEAMS.)

3.2 GROUT FOR BASE PLATES SHALL BE NON-SHRINKABLE GROUT AND SHALL HAVE A MINIMUM SPECIFIED COMPRESSIVE STRENGTH AT 28 DAYS OF 35MPa, UNLESS NOTED OTHERWISE.

3.3 NO CALCIUM CHLORIDE SHALL BE USED IN ANY CONCRETE.

3.4 MIXING, TRANSPORTING AND PLACING OF CONCRETE SHALL CONFORM TO ACI 301M-05.

3.5 ALL CONCRETE WORK SHALL CONFORM TO THE REQUIREMENTS OF THE AMERICAN CONCRETE INSTITUTE (ACI) 318M MANUAL (metric), "BUILDING CODE REQUIREMENTS FOR REINFORCED CONCRETE", AND REQUIREMENTS OUTLINED IN THE CONTRACT SPECIFICATIONS. WHEN THERE IS A CONFLICT BETWEEN ACI AND THE SPECIFICATIONS, THE MORE STRINGENT SHALL GOVERN.

3.6 CHAMFER ALL EXPOSED EXTERNAL CORNERS OF CONCRETE WITH 20mm x45 DEGREE CHAMFER UON.

3.7 CONCRETE REINFORCEMENT BARS SHALL CONFORM TO ASTM A615M, GRADE 420, REINFORCING BARS SHALL NOT BE TACK WELDED, WELDED, HEATED OR CUT, UNLESS INDICATED ON THE CONTRACT DOCUMENTS. ALL LAP SPLICES SHALL BE CLASS "B" UON.

3.8 HORIZONTAL FOOTING AND HORIZONTAL WALL REINFORCEMENT SHALL BE CONTINUOUS AND SHALL HAVE 90 DEGREE BENDS AND EXTENSIONS, OR CORNER BARS OF EQUIVALENT SIZE LAPPED WITH A CLASS B TENSION SPLICE AT CORNERS AND INTERSECTIONS. TOP BAR CRITERIA SHALL APPLY IF 300mm OR MORE OF FRESH CONCRETE IS PLACED BELOW BAR.

3.9 SLABS-ON-GRADE SHALL HAVE CONSTRUCTION JOINTS OR CRACK CONTROL JOINTS AS SHOWN ON THE SHEETS. CONSTRUCTION JOINTS CAN BE USED AT CONTROL JOINT LOCATIONS AT CONTRACTORS OPTION. SEE SLAB PLANS & JOINT DETAILS FOR ADDITIONAL INFORMATION. FOR AREAS NOT SHOWN ON THE SHEETS, THE MAXIMUM SPACING OF CONSTRUCTION/ CRACK CONTROL JOINTS SHALL BE 4800 mm.

3.10 SEE SPECIFICATIONS FOR ALL WATERPROOFING/DAMPPROOFING REQUIREMENT.

3.11 ALL CONCRETE REINFORCEMENT SHALL BE DETAILED, FABRICATED, LABELED, SUPPORTED, AND SPACED IN FORMS AND SECURED IN PLACE IN ACCORDANCE WITH THE PROCEDURES AND REQUIREMENTS OUTLINED IN THE LATEST EDITION OF THE "BUILDING CODE REQUIREMENTS FOR REINFORCED CONCRETE", ACI 318M, AND THE "MANUAL OF STANDARD PRACTICE FOR DETAILING REINFORCED CONCRETE STRUCTURES", ACI 315M, LATEST EDITION.

3.12 SHOP DRAWINGS SHOWING REINFORCING DETAILS, INCLUDING STEEL SIZES, SPACING AND PLACEMENT, SHALL BE SUBMITTED FOR REVIEW PRIOR TO FABRICATION.

3.13 ALL DOWELS SHALL MATCH SIZE AND NUMBER OF MAIN REINFORCING, UNLESS NOTED OTHERWISE ON THE SHEETS.

3.14 ADDITIONAL BARS SHALL BE PROVIDED AROUND ALL FLOOR AND WALL OPENINGS AS SHOWN ON THE SHEETS.

3.15 SEE ARCHITECTURAL SHEETS FOR TYPE AND LOCATION OF ALL FLOOR FINISHES.

3.16 THE CONTRACTOR SHALL COORDINATE ADDITIONAL WALL/SLAB OPENINGS NOT SHOWN ON STRUCTURAL SHEETS. SEE MECHANICAL, ELECTRICAL, PLUMBING AND CIVIL SHEETS.

3.17 THE SUB-CONTRACTOR SHALL VERIFY ALL OPENINGS, PAD SIZES, AND ANCHOR BOLTS WITH EQUIPMENT SELECTED.

3.18 FOR ALL WALLS & PIERS, PROVIDE DOWELS INTO FOOTING AT EACH VERT REINF BAR, UON DOWEL SIZE SHALL BE SAME AS VERT REINF.

3.19 ALL REINFORCING INDICATED TO BE WELDED SHALL BE IN ACCORDANCE WITH ASTM A706M. "LOW ALLOY STEEL DEFORMED BARS FOR CONCRETE REINFORCEMENT". ANY INSTALLATIONS USING MANUFACTURER'S EQUIPMENT SHALL BE PER MANUFACTURER'S RECOMMENDATIONS.

3.20 PROVIDE CONCRETE POUR STOPS OR FORMED AS REQUIRED FOR INSTALLATION OF ALL CONCRETE WORK.

3.21 PROVIDE ADDITIONAL (2)-#13 x 600mm REINFORCING BARS IN SLAB-ON GRADE AT ALL RE-ENTRANT CORNERS. PLACE BARS AT MID-DEPTH OF SLAB WITH A CLEARANCE OF 50mm FROM CORNER UON.

4.0 CONCRETE MASONRY

4.1 MASONRY CONSTRUCTION AND MATERIALS SHALL CONFORM TO ALL REQUIREMENTS OF THESE CONTRACT DOCUMENTS AND THE PROJECT SPECIFICATIONS.

4.2 THE SPECIFIED ULTIMATE COMPRESSIVE STRENGTH OF CONCRETE MASONRY (f'm) ON THE NET AREA IS A MINIMUM OF 10.4 MPa.

4.3 PROVIDE TWO #16 BARS CONTINUOUS IN ALL CMU AND CAST-IN-PLACE BOND BEAMS UON ON THE SHEETS. BOND BEAMS SHALL BE CONTINUOUS AND SPACED AT A MAXIMUM OF 1200mm OC VERTICALLY. PROVIDE BOND BEAM STARTER COURSE AT BOTTOM OR FIRST COURSE ON ALL MASONRY WALLS AND PARTITIONS. ALL BOND BEAMS SHALL BE A MINIMUM OF 200mm IN DEPTH WITH REINFORCING BEING CONTINUOUS AND HAVING STANDARD ACI 180° HOOKS AT EACH END. PROVIDE STANDARD BAR SPLICES AS SPECIFIED.

4.4 FOR WALL REINFORCING, SEE DETAIL 7 ON SHEET S5

4.5 CMU CELLS THAT REQUIRE VERTICAL REINFORCING BARS AS INDICATED ON THE CONTRACT DRAWINGS AND/OR SPECS SHALL HAVE REINF BARS PLACED IN CENTERS OF CMU CELLS AND CONTINUOUSLY GROUTED UON.

4.6 PROVIDE LADDER TYPE JOINT REINFORCEMENT AT (200mm EXTERIOR & 400mm INTERIOR) ON CENTER MAXIMUM UON MINIMUM ROD SIZE USED SHALL BE 9 GA. DEFORMED WIRE AND CONFORM TO ASTM A82M, UON.

4.7 PROVIDE CONTROL JOINTS AS INDICATED ON THE ARCHITECTURAL SHEETS.

4.8 GROUT FOR MASONRY SHALL BE NORMAL WEIGHT AND HAVE A MINIMUM COMPRESSIVE STRENGTH OF 25 MPa AT 28 DAYS. GROUT SHALL CONFORM TO ASTM C476M. GROUT LIFTS SHALL NOT EXCEED 1400mm.

4.9 USE MORTAR TYPE S CONFORMING TO ASTM C270M, SEE SPECIFICATIONS.

4.10 CONCRETE MASONRY UNITS SHALL BE NORMAL WEIGHT AND CONFORM TO ASTM C90M.

4.11 ALL CMU CELLS, OPEN CAVITIES, AND AIR SPACES SHALL BE GROUTED TO STOP FRAGMENTS FROM MORTAR BLAST

4.12 BOND BEAM REINFORCING SHALL BE DISCONTINUOUS AT CONTROL JOINTS (UON). MAXIMUM CONTROL JOINT SPACING SHALL BE AS INDICATED ON THE ARCHITECTURAL SHEETS.

4.13 CONTRACTOR SHALL COORDINATE LOCATION OF ALL OPENINGS SEE ARCH, MECH, ELEC, AND PLUMBING SHEETS. FOR SIZE AND LOCATION OF OPENINGS.

4.14 MASONRY WALLS SHALL NOT BE BACK FILLED PRIOR TO THE MORTAR AND GROUT ATTAINING THEIR RESPECTIVE MAXIMUM DESIGN STRENGTHS PER SPECIFICATIONS.

5.0 CFMRF - COLD FORM METAL ROOF FRAMING SYSTEM

5.1 CFMF SHALL BE DESIGNED BY CFMF MANUFACTURER'S ENGINEER FOR ALL LOADING PER CODE AND AS INDICATED ON THE SHEETS.

5.2 FOR WIND LOADS, SEE THE DESIGN CRITERIA ON SHEET S2.

5.3 SUBMIT VENDOR'S PUBLISHED LITERATURE, TEST DATA AND INSTALLATION INSTRUCTIONS FOR METAL STUD ASSEMBLY AND ACCESSORIES INCLUDING OTHER DATA AS MAY BE REQUIRED TO CERTIFY COMPLIANCE WITH PERFORMANCE REQUIREMENTS SPECIFIED HEREIN.

5.4 SHOP DRAWINGS AND DESIGN ANALYSIS SHALL BE STAMPED AND APPROVED BY A LICENSED PROFESSIONAL ENGINEER.

5.5 CONNECTIONS AND GAUGE SIZES ARE MINIMUM AND SHALL BE INCREASED AS NECESSARY TO PROVIDE A STRUCTURALLY ADEQUATE SYSTEM. KICKERS MAY BE ADDED TO REDUCE THE STUD HEIGHTS WHERE ACCEPTABLE AND COORDINATED WITH THE ARCHITECTURAL DRAWINGS.

5.6 CRMRF SHALL HAVE THE FOLLOWING MINIMUM PROPERTIES:

STUD/RAFTER/EAVE STRUT/BRACE/BLOCKING:
Fy = 344 MPa
GAUGE = 18
DEPTH = 152.3 mm
WIDTH = 34.8 mm
MOMENT OF INERTIA, Ix = 847x10^3 mm^4
SECTION MODULUS, Sx = 11.2x10^3 mm^3

TRACK:
Fy = 344 MPa
GAUGE = 16
DEPTH = 152.3 mm
WIDTH = 38 mm
MOMENT OF INERTIA, Ix = 1083x10^3 mm^4
SECTION MODULUS, Sx = 13.8x10^3 mm^3

PURLIN/SUBGIRT:
Fy = 393 MPa
GAUGE = 16
MOMENT OF INERTIA (TOP COMPRESSION), Ixt = 23.7x10^3 mm^4
MOMENT OF INERTIA (BOTT COMPRESSION), Ixb = 22.7x10^3 mm^4
SECTION MODULUS (TOP COMPRESSION), Sxt = 1.8x10^3 mm^3
SECTION MODULUS (BOTT COMPRESSION), Sxb = 1.7x10^3 mm^3

MINIMUM LAP SPLICES OF REINFORCING BARS IN TENSION (PER ACI 318M-05)

f'c = 28 MPa CONCRETE

BAR SIZE / CENTER TO CENTER BAR SPACING	(---TOP BARS--) LESS THAN 4db	(---TOP BARS--) 4db OR MORE	(--OTHER BARS--) LESS THAN 4db	(--OTHER BARS--) 4db OR MORE	(--OTHER BARS--) 4db
#10	460	460	410	410	40
#13	660	610	510	480	50
#16	1020	760	790	580	60

NOTES:

1. LAP SPLICES ABOVE ARE IN MILLIMETERS UON.
2. YIELD STRENGTH OF REINFORCEMENT, fy, IS 420MPa (LAP SPLICE LENGTH IS IN MILLIMETERS).
3. CONCRETE IS NORMAL WEIGHT (2400Kg/m^3).
4. TOP BAR INDICATES HORIZONTAL REINFORCEMENT WHICH IS PLACED ABOVE 300mm OR MORE OF FRESH CONCRETE.
5. SEE COLUMN SCHEDULE FOR COLUMN AND SHEAR WALL VERTICAL LAP SPLICE.
6. STRAIGHT DEVELOPMENT LENGTH OF AN UNLAPPED BAR IS EQUAL TO VALUE FROM TABLE DIVIDED BY 1.3.
7. CATEGORY FOR BARS SPACED LESS THAN 4d, OR ON CENTER CORRESPONDS TO CATEGORY 1 IN THE CRSI HANDBOOK WHEREAS FOR BARS SPACED 4d, OR MORE ON CENTER CORRESPOND TO CRSI CATEGORY 5.

CONCRETE MATERIALS SCHEDULE

STRUCTURAL ELEMENT	f'c CONCRETE COMPRESSIVE STRENGTH @ 28 DAYS (MPa)
SLAB-ON-GRADE/TURN-DOWN SLABS	28
ROOF AND FLOOR SLABS	28
ALL FOOTINGS (UON)	28
MISC. CURBS, WALLS AND PADS UON	28
CAST-IN-PLACE LINTEL	28

NOTES:
1. ALL CONCRETE SHALL BE NORMAL WEIGHT CONCRETE. (2400 Kg/m^3 UON)
2. ALL CONCRETE SHALL HAVE A WATER-CEMENT RATIO OF 0.45.

MASONRY REINFORCING MINIMUM LAP SPLICES

BAR SIZE	BASIC LAP SPLICE Ld FOR CMU REINFORCING(mm)
#10	450
#13	600
#16	750

STANDARD HOOKS IN TENSION PER (ACI 318M-05)

HOOK DEVELOPMENT LENGTH Ldh (mm)	
BAR SIZE	f'c 28 MPa
#10	180
#13	250
#16	300
#19	380
#22	430
#25	480
#29	560
#32	610
#36	690

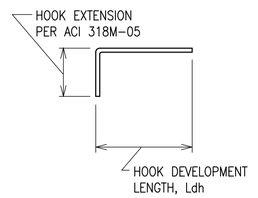

NOTES:
1. CONCRETE IS NORMAL WEIGHT CONCRETE.
2. BAR YIELD STRENGTH, fy = 420 MPa
3. SIDE COVER REQUIREMENTS OF ACI SECT. 12.5.3 ARE ASSUMED TO NOT BE MET.
4. TIE OR STIRRUP REQUIREMENTS OF ACI SECT. 12.5.3 ARE ASSUMED TO NOT BE MET.
5. REDUCTION FOR EXCESS REINFORCEMENT IS NOT TAKEN.
6. HOOK DEVELOPMENT LENGTH IS VALID FOR 180° HOOKS ALSO.

US Army Corps of Engineers
Afghanistan Engineer District

	DESCRIPTION	DATE	APP
SYMBOL			

DESIGNED BY: GDH | DATE: 09-30-09
DWN BY: MDB | SUBMITTED BY: BAKER
CHK BY: CWW | FILE NO.: ANPSDS-001XXX

Michael Baker Jr., Inc
A unit of Michael Baker Corporation
Airside Business Park
100 Airside Drive
Moon Township, PA 15108
www.mbakercorp.com

AFGHAN NATIONAL POLICE
STANDARD DESIGN
GUARD SHACK

GENERAL NOTES

SHEET REFERENCE NUMBER:
S1

100% SUBMISSION

STRUCTURAL DESIGN CRITERIA

ALL DESIGNS SHALL CONFORM TO THE PROVISIONS OF THE IBC 2006 AS APPLICABLE

1.0 DESIGN LOADS

1.1 DEAD LOADS

1.1.1 ROOF DEAD LOADS – CONVENTIONAL FRAMING

	MAXIMUM GRAVITY LOAD	MINIMUM GRAVITY LOAD
LIGHT GAUGE FRAMING	0.20 KPa	0.15 KPa
METAL ROOFING	0.14 KPa	0.05 KPa
INSULATION	0.10 KPa	0.05 KPa
MISC	0.05 KPa	0.00 KPa
	0.49 KPa	0.25 KPa

1.1.2 ROOF DEAD LOADS – CONCRETE FRAMING

	MAXIMUM GRAVITY LOAD
CONC FLAT SLAB	4.80 KPa
MECH/ELEC/PLUMBING	0.15 KPa
MISC	0.05 KPa
	5.00 KPa

1.2 LIVE LOADS (PER IBC 2006)

1.2.1 ROOF LIVE LOADS: ALL BUILDINGS

GREATER OF 1.0 KPa MINIMUM OR SNOW LOAD

1.2.2 SLAB-ON-GRADE LIVE LOADS

ALL BUILDINGS 4.80 KPa

1.3 SNOW LOADS (PER IBC 2006)

1.3.1 DESIGN PARAMETERS

GROUND SNOW LOAD (per UFC 3-310-01)	PER LOCAL CONDITION
SNOW IMPORTANCE FACTOR	1.0 KPa
SNOW EXPOSURE FACTOR	1.0 KPa

1.4 SEISMIC LOADS (PER IBC 2006 & UFC 3-310-04)

1.4.1 SEISMIC PARAMETERS – LOAD BEARING MASONRY

SEISMIC OCCUPANCY CATEGORY	II
SEISMIC IMPORTANCE FACTOR (I)	1.0
SEISMIC SITE CLASS	D
Ss	1.280
S1	0.510
Sds	0.853
Sd1	0.510
SEISMIC DESIGN CATEGORY	D
SEISMIC RESISTING SYSTEM	BEARING WALL SYSTEM
	SPECIAL REINF MASONRY SHEAR WALLS
RESPONSE MODIFICATION FACTOR (R)	5.0
RESPONSE COEFFICIENT (Cs)	0.120
SEISMIC ANALYTICAL PROCEDURE	EQUIV LATERAL FORCE
SEISMIC BASE SHEAR	44.5kN

1.6 WIND LOADS (PER IBC 2006)

1.6.1 DESIGN PARAMETERS

BASIC WIND SPEED	137 Km/h
WIND IMPORTANCE FACTOR	1.0
WIND EXPOSURE CATEGORY	D
DIRECTIONALITY COEFFICIENT (Kd)	0.85
TOPOGRAPHIC FACTOR (Kzt)	1.0

1.6.2 DESIGN WIND PRESSURE – MAIN WINDFORCE RESISTING SYSTEM

LOCATION	CORNER ZONE WIDTH "a"	MEAN ROOF HEIGHT "h"	WINDWARD WALL (@ MEAN ROOF HEIGHT)	LEEWARD WALL (@ MEAN ROOF HEIGHT)	ROOF
FIELD ZONE	N/A	3405mm	582 N/m^2	−463 N/m^2	−803 N/m^2
CORNER ZONE	1440mm	3405mm	883 N/m^2	−689 N/m^2	−1244 N/m^2

a = 10% OF LEAST HORIZONTAL DIMENSION OR 0.4h, WHICHEVER IS SMALLER, BUT NOT LESS THAN EITHER 4% OF LEAST HORIZONTAL DIMENSION OR 0.9M.
h = MEAN ROOF HIEGHT, IN METERS, EXCEPT THAT EAVE HIEGHT SHALL BE USED FOR ANGLE GREATER THAN 10°.

1.6.3 DESIGN WIND PRESSURE – WALL COMPONENTS AND CLADDING

EXTERIOR WALL SYSTEMS & THEIR ATTACHMENTS TO THE PRIMARY STRUCTURE SHALL BE DESIGNED FOR THE PRESSURES SHOWN IN THE DIAGRAM BELOW:

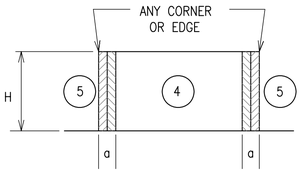

LOCATION	WINDWARD PRESSURE N/m^2 (inward)		LEEWARD PRESSURE N/m^2 (outward)		a
	④	⑤	④	⑤	
MAIN BUILDING					(mm)
AREA = 1 m^2	627	627	−986	−1216	900
AREA = 2 m^2	589	589	−948	−1134.8	900
AREA = 5 m^2	565	565	−910	−1086.9	900
AREA = 10 m^2	565	565	−910	−1086.9	900

NOTES:
1. DESIGN WIND PRESSURES ABOVE REPRESENT THE NET PRESSURE (SUM OF INTERNAL AND EXTERNAL PRESSURE) APPLIED NORMAL TO ALL SURFACES.
2. LINEAR INTERPOLATION BETWEEN VALUES OF TRIBUTARY AREA IS PERMISSIBLE.
3. PLUS AND MINUS SIGNS SIGNIFY PRESSURE TOWARD AND AWAY FROM THE EXTERIOR SURFACE, RESPECTIVELY.

1.6.4 DESIGN WIND PRESSURE – ROOF COMPONENTS AND CLADDING

ROOF COMPONENTS & THEIR ATTACHMENTS SHALL BE DESIGNED FOR THE PRESSURES SHOWN IN THE ADJACENT DIAGRAM & TABLE BELOW:

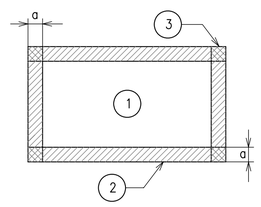

ROOF MEAN HEIGHT

1.6 WIND LOADS (CON'T)

LOCATION	GROSS UPLIFT PRESSURE N/m^2 (upward)			a
	①	②	③	
MAIN BUILDING				(mm)
AREA = 1 m^2	−838	−1460	−1460	900
AREA = 2 m^2	−838	−1460	−1460	900
AREA = 5 m^2	−838	−1460	−1460	900
AREA = 10 m^2	−838	−1460	−1460	900

NOTES:
1. DESIGN WIND PRESSURES ABOVE REPRESENT THE NET PRESSURE (SUM OF INTERNAL AND EXTERNAL PRESSURE) APPLIED NORMAL TO ALL SURFACES.
2. LINEAR INTERPOLATION BETWEEN VALUES OF TRIBUTARY AREA IS PERMISSIBLE.
3. PLUS AND MINUS SIGNS SIGNIFY PRESSURE TOWARD AND AWAY FROM THE EXTERIOR SURFACE, RESPECTIVELY.

2.0 FOUNDATION DESIGN CRITERIA (TO BE CONFIRMED BY THE CONTRACTOR)

THE GEOTECHNICAL ANALYSIS FOR THIS PROJECT IS THE RESPONSIBILITY OF THE CONTRACTOR AWARDED THE WORK. DESIGN VALUES USED IN THE STRUCTURAL ANALYSIS OF THE BUILDINGS HEREIN INDICATED HAVE BEEN ASSUMED AND SHALL BE CONFIRMED AND VERIFIED AS PART OF THE GEOTECHNICAL INVESTIGATION. VALUES WHICH DO NOT MEET THE REQUIREMENTS INDICATED BELOW SHALL BE IMMEDIATELY BROUGHT TO THE ATTENTION OF THE CONTRACTING OFFICER FOR CONSIDERATION AND DETERMINATION ON THE NEXT APPROPRIATE COURSE OF ACTION.

2.1.1 SOIL DESIGN PARAMETERS

NET ALLOWABLE SOIL BEARING CAPACITY	96.0 KPa
UNIT WEIGHT OF SOIL (moist)	1800 Kg/m^3
COEFF ACTIVE EARTH PRESSURE (Kpa)	0.30
COEFF PASSIVE EARTH PRESSURE (Kpp)	3.33
COEFF AT-REST EARTH PRESSURE (Kpr)	.55
COEFF OF SOIL FRICTION	.35
SUBGRADE MODULUS	4120 g/m^3
MINIMUM BEARING DEPTH BELOW GRADE	800mm
SEISMIC SITE CLASS (based on in-situ soil)	D

CMU LINTEL SCHEDULE

OPENING TYPE OR SIZE, BEAM LOCATION OR TYPE	MAX SPAN (mm)	BEAM DEPTH (mm)	MAIN REINFORCING			SHEAR REINF STIRRUPS
			TOP	BOTTOM	OTHER	
EXT WINDOW OR DOOR	900	400	(2)-#13	(2)-#13		----
INT WALL OPENING, NON-BEARING	1800	400		(2)-#13		----
INT WALL OPENING, NON-BEARING	900	200		(2)-#13		----

1. STRUCTURAL DRAWINGS DO NOT INDICATE ALL OPENINGS IN MASONRY WALLS. VERIFY NUMBER, SIZE AND LOCATION OF ALL OPENINGS IN MASONRY WALLS FROM ARCHITECTURAL SHEETS AND APPROVED PLUMBING, MECHANICAL, AND ELECTRICAL SHOP DRAWINGS.
2. PROVIDE 200mm BEARING EA END FOR 200mm DEEP CMU LINTEL. PROVIDE 400mm BEARING EA END FOR 400mm DEEP CMU LINTEL.
3. FOR HEAD DETAILS REFER TO ARCHITECTURAL SHEETS.
4. REINFORCING SHALL BE ASTM A615M, GRADE 420. CONCRETE FOR CAST-IN-PLACE BOND BEAMS SHALL HAVE A MINIMUM COMPRESSIVE STRENGTH OF 28 MPa AT 28 DAYS.
5. CONTRACTOR SHALL SUBMIT FOR APPROVAL SHOP DRAWINGS AND SCHEDULES SHOWING SIZE, DETAILS, LOCATIONS, ETC FOR ALL CAST-IN-PLACE BEAMS IN CMU WALLS.

CONCRETE COVER SCHEDULE

MINIMUM CONCRETE COVER PROTECTION FOR REINFORCEMENT BARS SHALL BE AS FOLLOWS: (SEE ACI 318M-05, SECTION 7.7 FOR CONDITIONS NOT NOTED). DIMENSIONS FOR BAR PLACEMENT GIVEN IN SECTIONS AND DETAILS SHALL SUPERSEDE MINIMUM COVER REQUIREMENTS GIVEN HERE. DIMENSIONS ARE IN mm.

FOOTINGS (EARTH FORMED)		70
COLUMNS / PIERS (TO TIES)		40
GRADE BEAMS OR SLAB TURNED DOWN EDGES:		
TOP		40
BOTTOM (EARTH FORMED)		70
SIDES (EARTH FORMED)		70
SIDES (BOARD FORMED)	#16 BAR & SMALLER	40
	#19 THRU #36 BAR	50
ELEVATED BEAMS & SLABS:		
BEAM TIES & STIRRUPS (NOT EXPOSED TO WEATHER)		40
BEAM TIES & STIRRUPS (EXPOSED TO WEATHER)		50
FLOOR SLABS (NOT EXPOSED TO WEATHER)		20
FLOOR SLABS (EXPOSED TO WEATHER)		
#19 & LARGER		50
#13 & SMALLER		40
ROOF SLAB BARS		25
SLABS-ON-GRADE (NO EXPOSURE TO WEATHER) FROM TOP		20
SLABS-ON-GRADE (EXPOSURE TO WEATHER) FROM TOP		40
UTILITY TUNNEL WALLS, RETAINING WALLS AND SHEAR WALLS, (NO SURFACES SHALL BE EARTH FORMED) EARTH SIDE AND FRONT SIDE (EXPOSED TO WEATHER):		
#16 BAR AND SMALLER		40
#19 THRU #36 BAR		50

PROVIDE STANDARD BAR CHAIRS AND SPACERS AS REQUIRED TO MAINTAIN CONCRETE PROTECTION SPECIFIED.

US Army Corps of Engineers
Afghanistan Engineer District

SYMBOL	DESCRIPTION	DATE	APP

DESIGNED BY: GDH	DWN BY: MDB	CHK BY: CWW	DATE: 09-30-09
SUBMITTED BY: BAKER	FILE NO.: ANPSDS-002XXX		

Michael Baker Jr., Inc
A unit of Michael Baker Corporation
Airside Business Park
100 Airside Drive
Moon Township, PA 15108
www.mbakercorp.com

AFGHAN NATIONAL POLICE
STANDARD DESIGN
GUARD SHACK

DESIGN CRITERIA & SCHEDULES

SHEET REFERENCE NUMBER:
S2

100% SUBMISSION

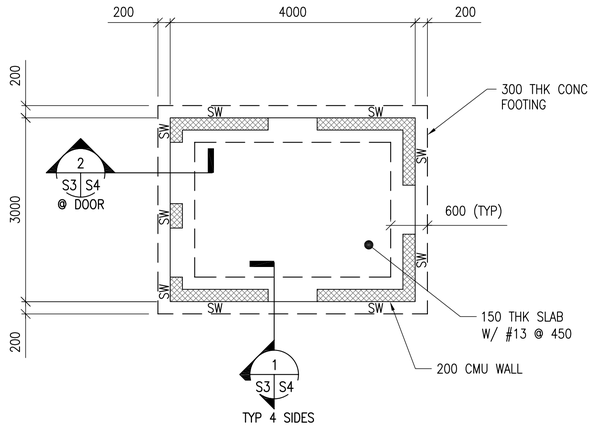

1 S3 S3 **FOUNDATION/SLAB PLAN** N

SCALE: 1:50

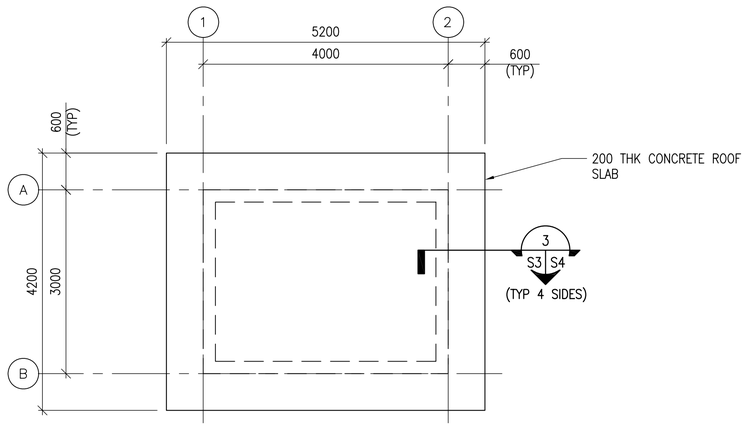

2 S3 S3 **ROOF FRAMING PLAN** N

SCALE: 1:50

NOTES:

1. FINISH FIRST FLOOR ELEVATION SHALL BE (DATUM 0.0) ALL PLUS OR MINUS DIMENSIONS INDICATED ON PLAN OR REFERRED TO IN NOTES RELATE TO FINISH FIRST FLOOR ELEVATION.
2. TOP OF EXTERIOR FOOTINGS SHALL BE –600 UNLESS OTHERWISE INDICATED.
3. UNLESS OTHERWISE INDICATED, FLOORS SHALL BE 150 THICK CONCRETE SLAB–ON–GRADE W/ 13 DIA REBAR @ 450 OC EW (38 CLR TOP) OVER 100 COMPACTED POROUS FILL (#57 STONE)
4. REFER TO SHEETS S1 & S2 FOR STRUCTURAL NOTES, ABBREVIATIONS AND SYMBOLS.
5. REFER TO ARCHITECTURAL SHEETS FOR MASONRY PARTITION TYPES AND SHEET S5 FOR REINFORCEMENT.
6. SEE MECHANICAL AND ELECTRICAL SHEETS FOR CONCRETE PAD LOCATIONS, SIZES, AND THICKNESS NOT SHOWN. SEE SHEET S5 FOR DETAILS.
7. REFER TO SHEET S5 FOR TYPICAL MASONRY WALL DETAILS.
8. COORD W/ ARCHITECTURAL SHEETS FOR COLD–FORMED STEEL OVERBUILT FRAMING ABOVE ROOF SLAB.
9. COLD–FORMED METAL OVERBUILT ROOF FRAMING NOT SHOWN FOR CLARITY. SEE FRAMING DETAILS AND SECTIONS ON SHEET S4.
10. "SW#" DENOTES MASONRY SHEAR WALL LOCATIONS. SEE "SPECIAL REINFORCED MASONRY SHEAR WALL ELEVATION ON SHEET S5 FOR REINFORCEMENT INFORMATION.

UNLESS OTHERWISE NOTED, LINEAR DIMENSIONS SHOWN ARE IN MILLIMETERS (MM)

0 1000 2000 4000

SCALE: 1: 50

US Army Corps of Engineers

Afghanistan Engineer District

SYMBOL	DESCRIPTION	DATE	APP'D

DESIGNED BY:	DATE:
GDH	09–30–09
DWN BY:	SUBMITTED BY:
MDB	BAKER
CHK BY:	FILE NO.:
CWW	ANPSDS–103XXX

Michael Baker Jr., Inc
A unit of Michael Baker Corporation
Airside Business Park
100 Airside Drive
Moon Township, PA 15108
www.mbakercorp.com

AFGHAN NATIONAL POLICE
STANDARD DESIGN
GUARD SHACK

FOUNDATION & ROOF FRAMING PLANS

SHEET REFERENCE NUMBER:

S3

100% SUBMISSION

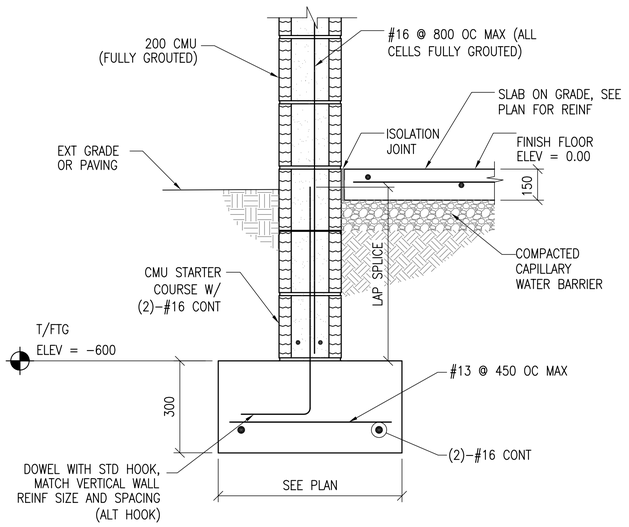

1 S3 S4 SECTION
SCALE: 1:10

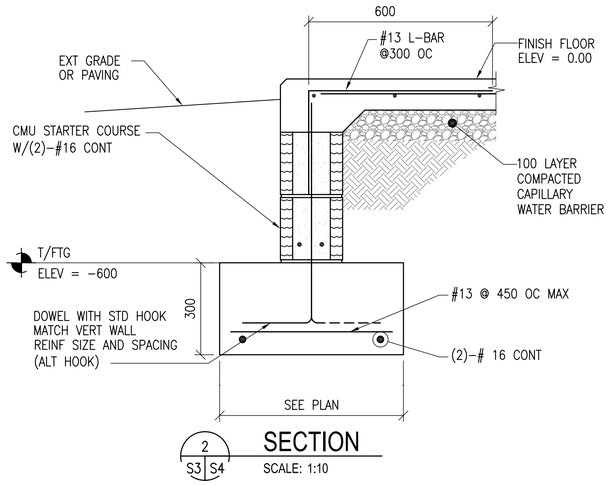

2 S3 S4 SECTION
SCALE: 1:10

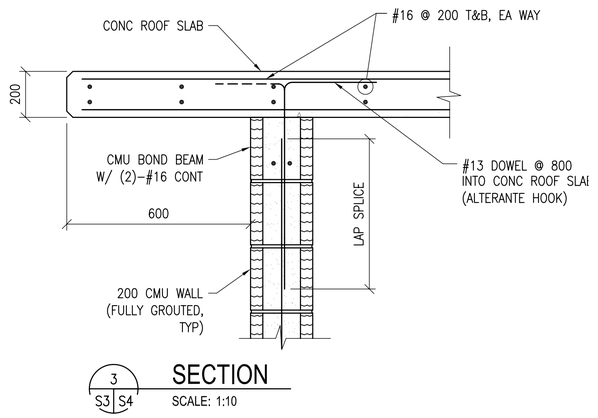

3 S3 S4 SECTION
SCALE: 1:10

4 S4 S4
600 (TYP) STUDS @ 2200 SPACING (MAX)
300 (TYP)
16 GA PURLIN @ 1200 &
@ EA STUD. USE (1)–#12
SCREW EA SIDE
CORRUGATED METAL ROOF PANEL
SEE ARCHITECTURAL SHEETS
18 GA COLD–FORMED METAL STUD
RAFTER @ 1200 OC ATTACH
RAFTER TO STUD W/ (4)–#12
SELF DRILLING TAPPING SCREWS
16 GA METAL PLATE CONNECTOR.
USE (4)–#12 SELF DRILLING
TAPPING SCREWS EA SIDE OF RIDGE
18 GA COLD–FORMED
METAL STUD @ EA RAFTER
16 GA COLD–FORMED METAL TRACK
CONTINUOUS W/ 12ø EXP BOLTS @
1200 W/ 80 EMBEDMENT (TYP)
USE (2)–#12 SELF DRILLING TAPPING
SCREWS @ EA STUD FLANGE

C S4 S4
10
3
PURLINS @ 1200

NOTES:
1. SEE NOTES ON SHEET S1 FOR OVERBUILT ROOF FRAMING MEMBER SECTION PROPERTY MINIMUM REQUIREMENTS
2. AT END OF BLDG PROVIDE TRANSVERSE BRACE @ 2400 OC & @ END BAYS SIMILAR TO LONGITUDINAL BRACING
3. SECTION THROUGH END OF BLDG IS SIMILAR EXCEPT HIP

A S4 S4 TYPICAL OVERBUILT ROOF FRAMING DETAIL
SCALE: 1:20

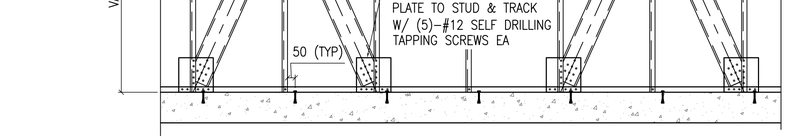

4 S4 S4 SECTION
SCALE: NTS

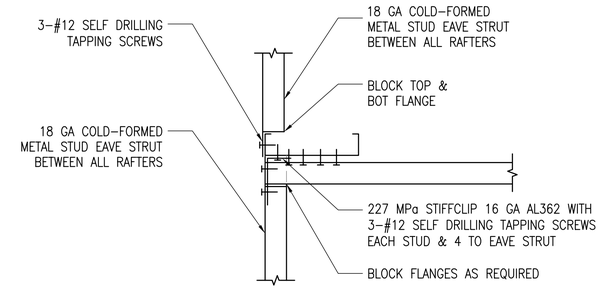

5 S4 S4 SECTION
SCALE: 1:5

DETAIL NOTE:
AT END OF BLDG PROVIDE
TRANSVERSE BRACE @ 2400
OC & @ END BAYS SIMILAR
TO LONGITUDINAL BRACING

4 S4 S4
LONGITUDINAL BRACE
DIAGONAL BRACE @ EA RAFTER
LOCATED AS SHOWN.
SIMILAR TO LONGITUDINAL BRACING
SHOWN IN SECTION 5/S4

B S4 S4 TYPICAL ROOF BRACE LAYOUT DETAIL
SCALE: NTS

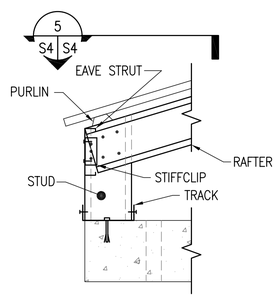

C S4 S4 DETAIL
SCALE: 1:10

DOUBLE LEDGE MEMBERS ARE 18 GA
COLD–FORMED METAL TRACK.
FY = 344 MPa
DEPTH = 88.9mm
WIDTH = 34.8mm
MOMENT OF INERTIA, Ix = 236x103 mm4
SECTION MODULUS, SX = 5.3x103 mm3

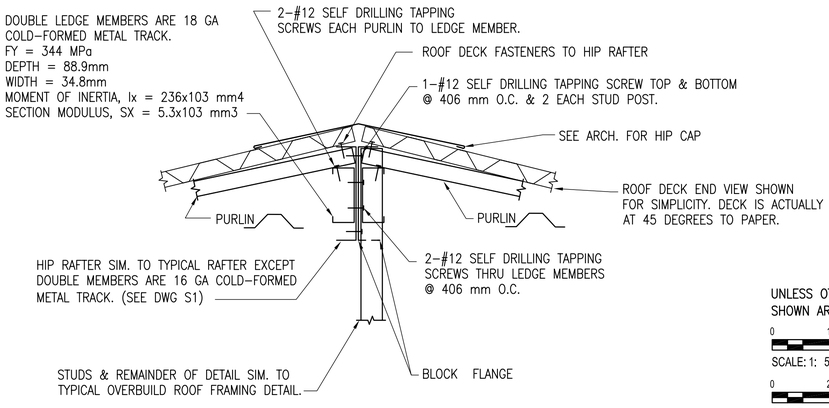

TYPICAL HIP FRAMING DETAIL
SCALE: 1:5

UNLESS OTHERWISE NOTED, LINEAR DIMENSIONS SHOWN ARE IN MILLIMETERS (MM)

0 100 200 400
SCALE: 1: 5

0 200 400 800
SCALE: 1: 10

0 400 800 1600
SCALE: 1: 20

US Army Corps of Engineers
Afghanistan Engineer District

DESIGNED BY: GDH	DATE: 09–30–09
DWN BY: MDB	SUBMITTED BY: BAKER
CHK BY: CWW	FILE NO.: ANPSDS–304XXX

SYMBOL	DESCRIPTION	DATE	APP

Michael Baker Jr., Inc
A unit of Michael Baker Corporation
Airside Business Park
100 Airside Drive
Moon Township, PA 15108
www.mbakercorp.com

AFGHAN NATIONAL POLICE
STANDARD DESIGN
GUARD SHACK

SECTIONS AND DETAILS

SHEET REFERENCE NUMBER:
S4

100% SUBMISSION

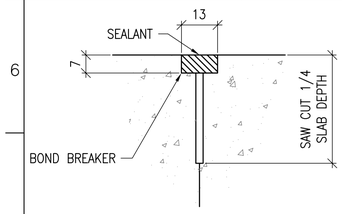

CONTROL JOINT DETAIL

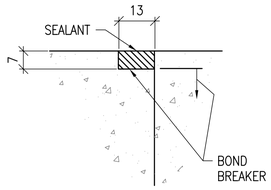

CONSTRUCTION JOINT DETAIL

1 S5 TYPICAL CONCRETE SLAB JOINT FINISH DETAIL

SCALE: NTS

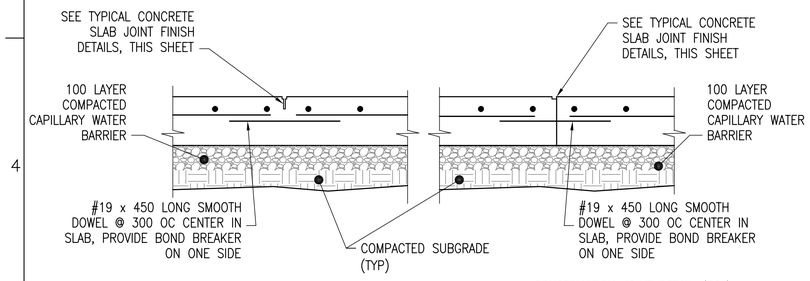

CONTROL JOINT DETAIL (CTJ)

CONSTRUCTION JOINT DETAIL (CSJ)

2 S5 TYPICAL SLAB ON GRADE JOINT DETAILS

SCALE: NTS

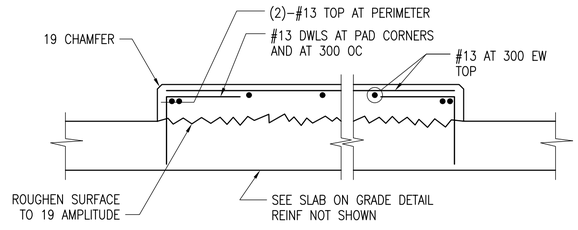

3 S5 INTERIOR EQUIPMENT PAD DETAIL

SCALE: NTS

DETAIL NOTE:
1. COORDINATE EQUIPMENT PAD SIZE AND LOCATIONS W/ ELECTRICAL/MECHANICAL SHEETS AND EQUIPMENT MANUFACTURER.

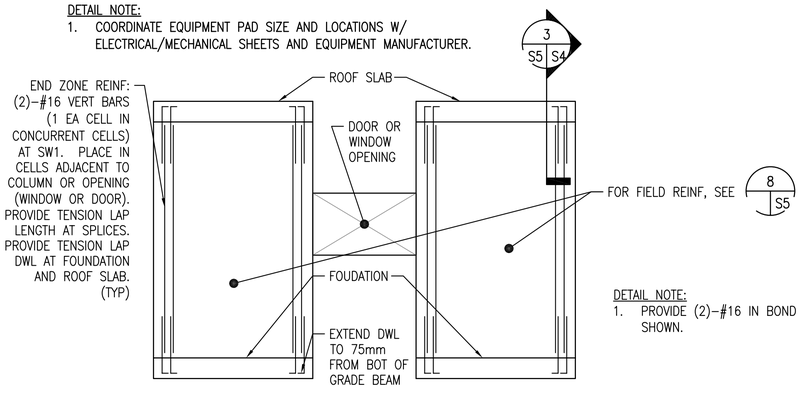

DETAIL NOTE:
1. PROVIDE (2)–#16 IN BOND BEAMS AT 1200 OC, NOT SHOWN.

4 S5 SPECIAL REINFORCED MASONRY SHEAR WALL ELEVATION

SCALE: NTS

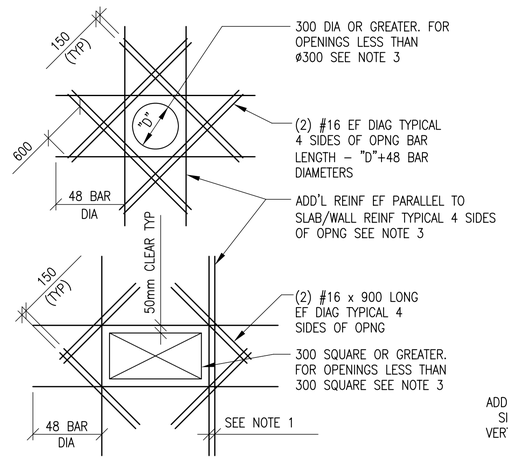

SLAB OPENINGS

5 S5 ADD'L REINFORCEMENT DETAILS

SCALE: NTS

DETAIL NOTES:
1. WHERE MORE THAN ONE ADDITIONAL BAR IS REQUIRED PARALLEL TO THE EXISTING SLAB/WALL REINFORCING THE ADDITIONAL REINFORCING BARS SHALL BE SPACED AT 100 ON CENTER.
2. ADDITIONAL REINFORCING PARALLEL TO THE SLAB/WALL REINFORCING SHALL BE #15 BARS THAT PROVIDE A STEEL AREA ON EACH SIDE OF THE OPENING EQUAL TO 1/2 THE AREA OF THE REINFORCING CUT BY THE OPENING.
3. FOR OPENINGS WITH SIDES OR DIAMETERS LESS THAN 300 SPREAD THE SLAB/WALL REINFORCING TO CLEAR THE OPENING.

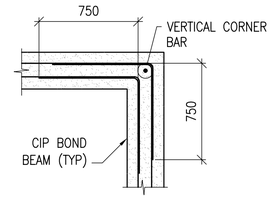

BOND BEAM CORNER

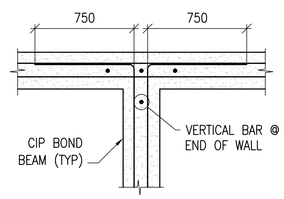

BOND BEAM INTERSECTION

6 S5 CIP BOND BEAM DETAILS

SCALE: NTS

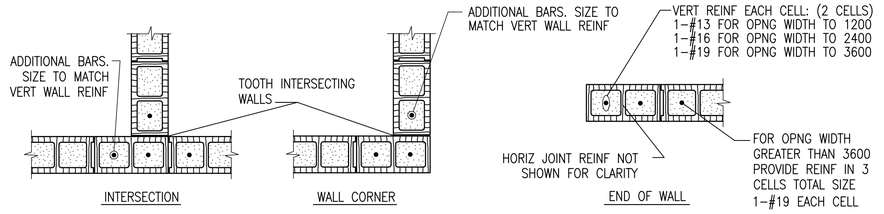

INTERSECTION

WALL CORNER

END OF WALL

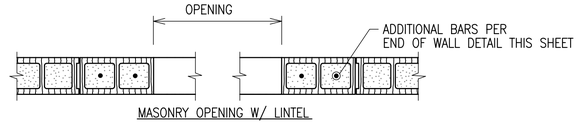

MASONRY OPENING W/ LINTEL

NOTES:
1. OPENING WIDTH SHALL NOT EXCEED 3600 FOR THIS TYPE OF JAMB
2. ALL CELLS FULLY GROUTED

7 S5 TYPICAL CMU DETAILS

SCALE: NTS

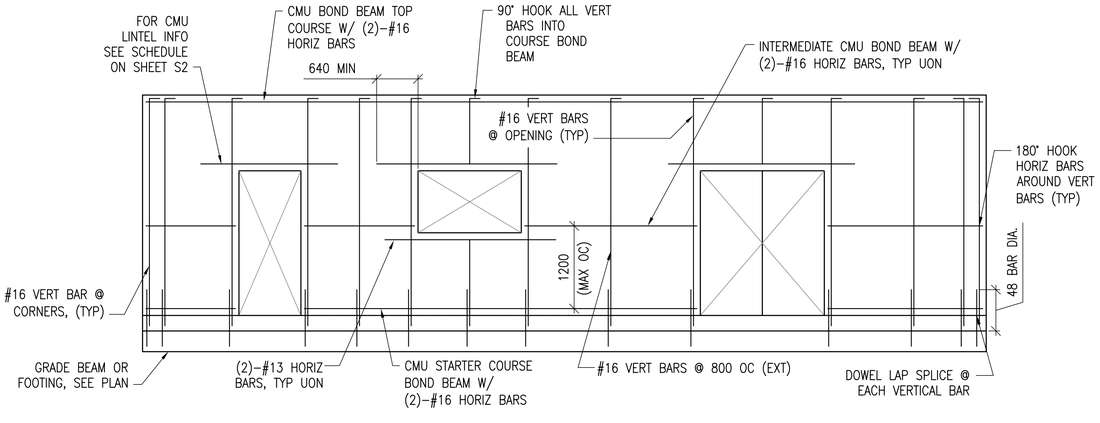

8 S5 MIN CMU WALL REINFORCING

SCALE: NTS

UNLESS OTHERWISE NOTED, LINEAR DIMENSIONS SHOWN ARE IN MILLIMETERS (MM)

US Army Corps of Engineers
Afghanistan Engineer District

SYMBOL	DESCRIPTION	DATE	APP'D

DESIGNED BY: GDH	DATE: 09-30-09	
DWN BY: RCG	SUBMITTED BY: BAKER	
CHK BY: CWW	FILE NO.: ANPSDS-505XXX	

Michael Baker Jr., Inc
A unit of Michael Baker Corporation
Airside Business Park
100 Airside Drive
Moon Township, PA 15108
www.mbakercorp.com

AFGHAN NATIONAL POLICE
STANDARD DESIGN
GUARD SHACK

TYPICAL DETAILS

SHEET REFERENCE NUMBER:
S5

100% SUBMISSION

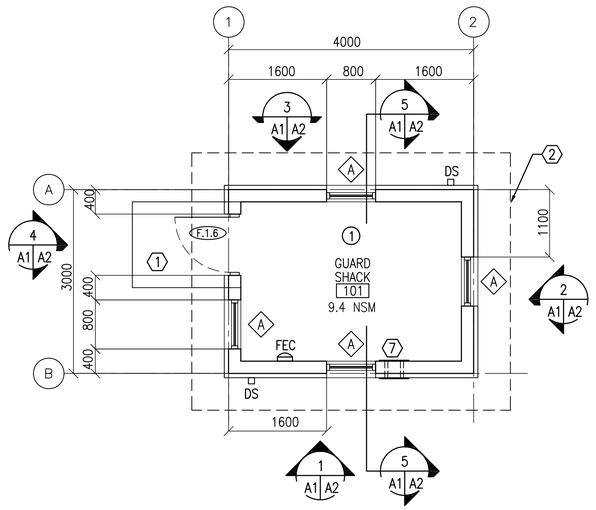

1 A1 A1 **FLOOR PLAN**
SCALE: 1:50
12.0 GSM

N

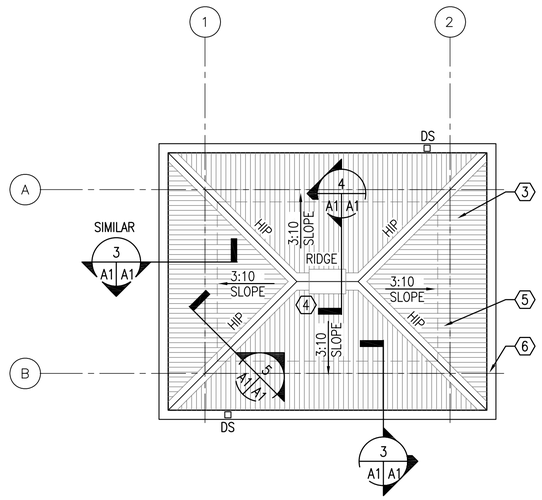

2 A1 A1 **ROOF PLAN**
SCALE: 1:50

N

GENERAL NOTES:

A. OPENINGS FOR DOORS SHALL BE LOCATED 200 MM FROM THE ADJACENT WALL UNLESS NOTED OTHERWISE

B. SURFACES TO BE PAINTED SHALL BE CLEAN AND FREE OF FOREIGN MATTER BEFORE APPLICATION OF PAINT. CLEANING SHALL BE SCHEDULED SO THAT DUST AND OTHER CONTAMINANTS WILL NOT FALL ON WET, NEWLY PAINTED SURFACES.

C. CONCRETE AND INTERIOR MASONRY SURFACES GROUTED SOLID SHALL BE ALLOWED TO DRY AT LEAST 30 DAYS BEFORE PAINTING EXCEPT CONCRETE SLAB ON GRADE WHICH SHALL BE ALLOWED TO CURE 90 DAYS BEFORE PAINTING.

D. PAINTS CONTAINING LEAD IN EXCESS OF 0.06 PERCENT BY WEIGHT OF THE TOTAL NONVOLATILE CONTENT SHALL NOT BE USED.

E. MERCURIAL FUNGICIDES SHALL NOT BE USED IN OIL–BASE PAINT.

F. REMOVE LOOSE DIRT AND CLEAN SURFACES BEFORE PAINTING. APPLY PAINT TO INTERIOR STRUCTURAL RIGID FRAMINGS AND CEILINGS AND TEST FOR ADHESION. PRIMER COAT FOR MASONRY. INITIAL FIRST COAT WITH AN ACRYLIC LATEX PAINT FOR EXTERIOR SURFACES AND A SECOND COAT WITH A WATER REPELLENT ACRYLIC LATEX PAINT.

G. METAL DOORS AND FRAMES SHALL RECEIVE A PRIMER COAT PLUS TWO COATS OF PAINT.

H. DIMENSIONS ARE TO STRUCTURAL COLUMN GRID, EDGE OF WINDOW OPENINGS, AND TO HINGE SIDE OF DOOR OPENINGS.

KEY NOTES: (X)

1. CONCRETE STOOP – RE: DETAIL 7/A3
2. LINE OF ROOF OVERHANG ABOVE
3. CORRUGATED METAL ROOF PANELS ON COLD–FORMED METAL FRAMING.
4. RIDGE VENT
5. LINE OF BUILDING WALL, BELOW
6. METAL GUTTER
7. TWO–PIECE WALL THIMBLE AND TRIM PLATE FOR OPTIONAL WOOD BURNING STOVE CHIMNEY PIPE. STOVE AND PIPE BY OTHERS.

ROOM FINISHES: (X)

1. WALLS: PAINTED PLASTER,
   FLOOR: SEALED CONCRETE
   CEILING: PAINTED PLASTER APPLIED TO STRUCTURE

LEGEND:

- F.1.4 — DOOR TYPE, SEE SHEET A3
- A — WINDOW TYPE, SEE SHEET A3
- X — KEY NOTE
- FEC — FIRE EXTINGUISHER CABINET
- 1 — ROOM FINISH TYPE DESIGNATION

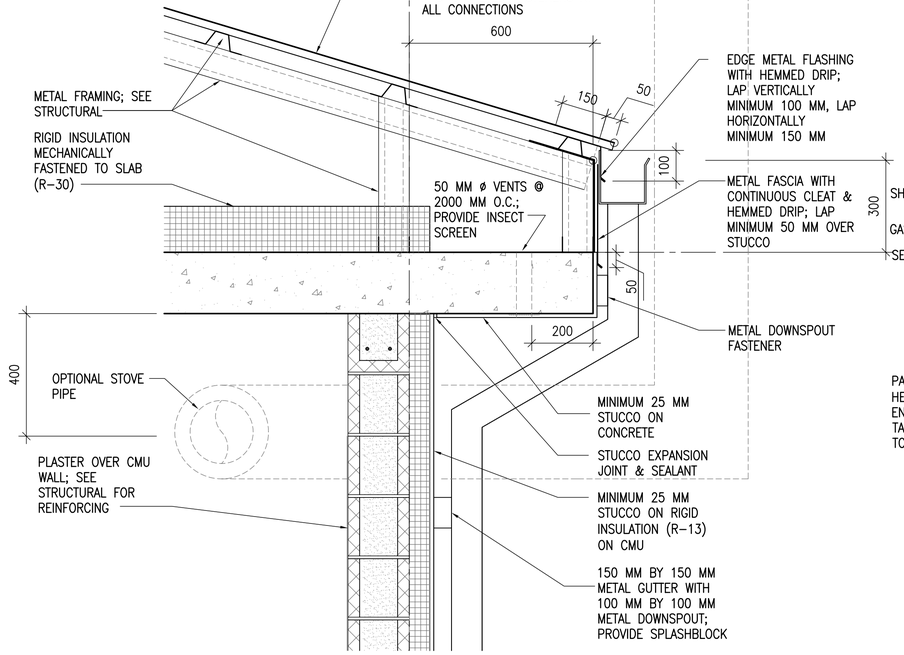

3 A1 A1 **EAVE DETAIL**
SCALE: 1:10

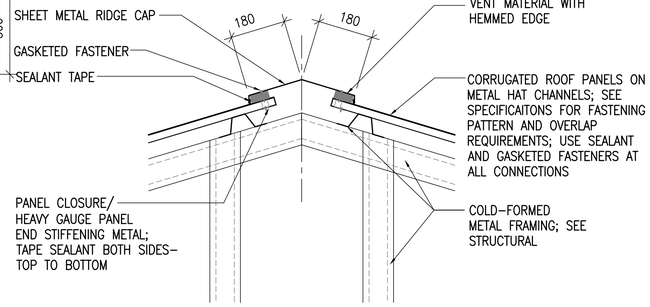

4 A1 A1 **RIDGE VENT DETAIL**
SCALE: 1:10

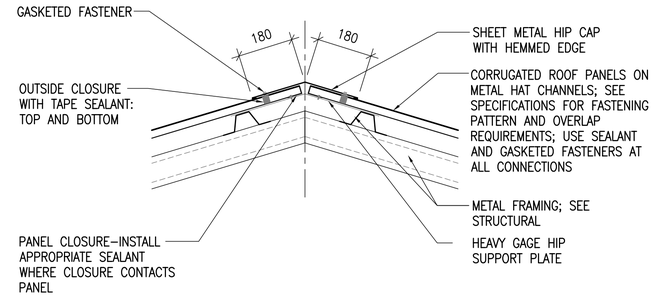

5 A1 A1 **HIP DETAIL**
SCALE: 1:10

UNLESS OTHERWISE NOTED, LINEAR DIMENSIONS SHOWN ARE IN MILLIMETERS (MM)

0 200 400 800
SCALE: 1: 10

0 1000 2000 4000
SCALE: 1: 50

US Army Corps of Engineers
Afghanistan Engineer District

SYMBOL	DESCRIPTION	DATE	APP'D

DESIGNED BY: PFF	DWN BY: ECN	CHK BY: NLJ
DATE: 09–30–09	SUBMITTED BY: BAKER	FILE NO.: ANPSDA–101XXX

Michael Baker Jr., Inc
A unit of Michael Baker Corporation
Airside Business Park
100 Airside Drive
Moon Township, PA 15108
www.mbakercorp.com

AFGHAN NATIONAL POLICE
STANDARD DESIGN
GUARD SHACK

FLOOR AND ROOF PLANS AND DETAILS

SHEET REFERENCE NUMBER:
A1

100% SUBMISSION

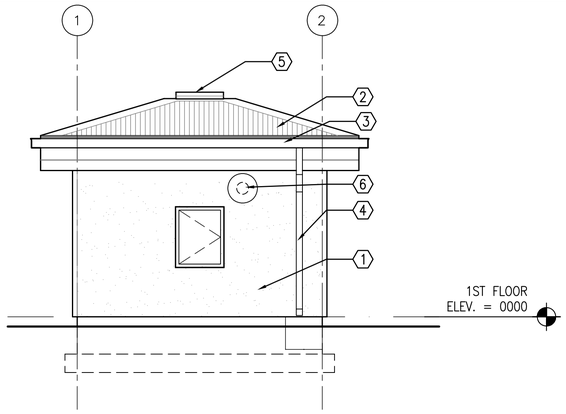

1 A1 A2 EAST ELEVATION

SCALE: 1:50

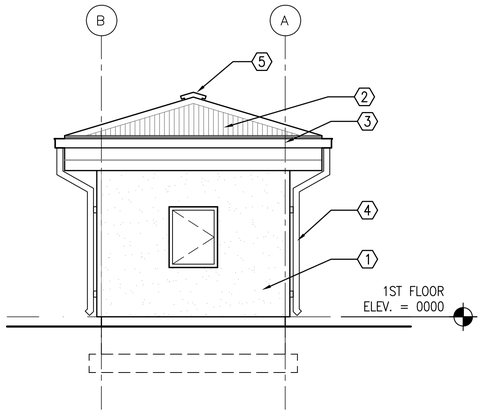

2 A1 A2 NORTH ELEVATION

SCALE: 1:50

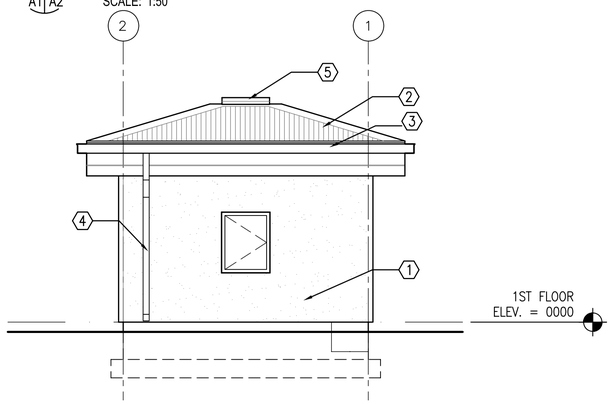

3 A1 A2 WEST ELEVATION

SCALE: 1:50

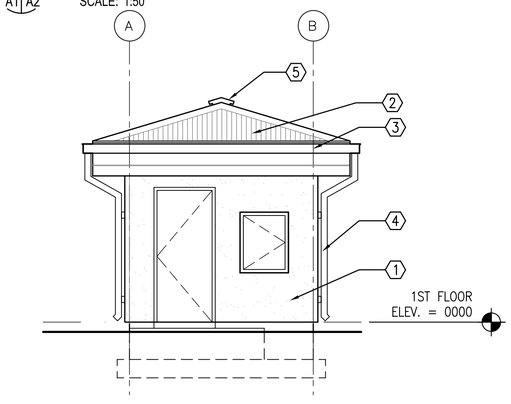

4 A1 A2 SOUTH ELEVATION

SCALE: 1:50

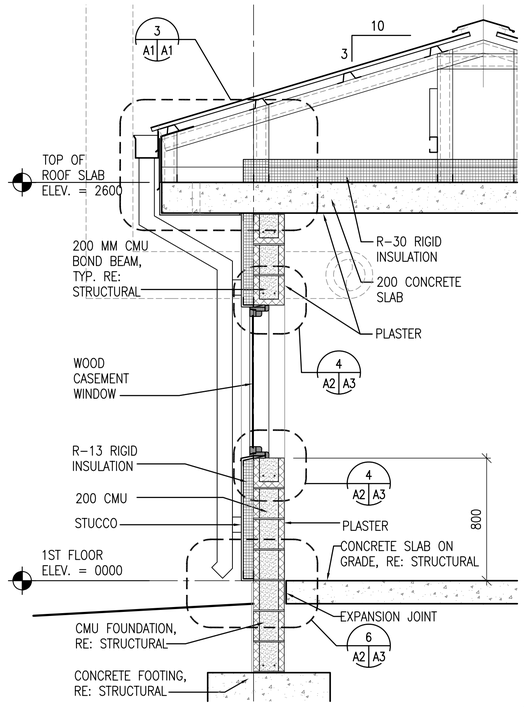

6 A2 A2 WALL SECTION

SCALE: 1:20

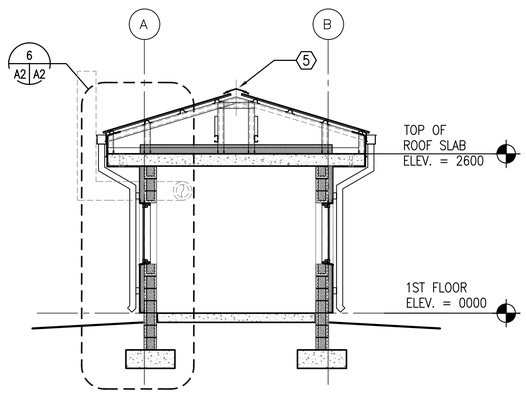

5 A1 A2 BUILDING SECTION

SCALE: 1:50

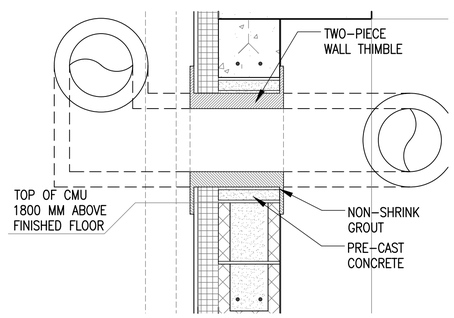

7 A2 A2 THIMBLE DETAIL, TYPICAL

SCALE: 1:10

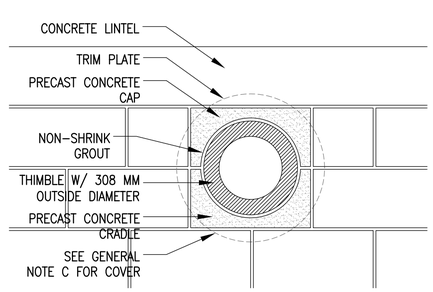

8 A2 A2 THIMBLE DETAIL, TYPICAL

SCALE: 1:10

GENERAL NOTES:

A. COORDINATE SIZE AND LOCATION OF OPENINGS FOR MECHANICAL ITEMS WITH MECHANICAL DRAWINGS.
B. PROVIDE STRUCTURAL LINTELS AS REQUIRED – RE: STRUCT
C. PROVIDE 480 MM SQUARE, 1.5 MM THICK GALVANIZED SHEET METAL COVER WITH 13 MM HEMMED EDGE FOR WALL THIMBLE UNTIL STOVE PIPE IS PROVIDED. INSTALL COVER ON EXTERIOR FACE OF THIMBLE TRIM PLATE. COVER SHALL BE BE SET IN SILICONE SEALANT AND FASTENED WITH 4 STAINLESS STEEL SCREWS. ALIGN FASTENER LOCATIONS WITH COVER PLATE FASTENER OPENINGS SO ADDITIONAL FASTENER PENETRATIONS ARE NOT CREATED IN EXTERIOR FINISH.

KEY NOTES: (X)

1. STUCCO AND RIGID INSULATION SYSTEM ON CMU
2. CORRUGATED METAL ROOF PANELS ON COLD-FORMED METAL FRAMING
3. METAL GUTTER
4. METAL DOWNSPOUT WITH SPLASH BLOCK
5. RIDGE VENT
6. TWO-PIECE WALL THIMBLE AND TRIM PLATE FOR OPTIONAL WOOD BURNING STOVE CHIMNEY PIPE. STOVE AND PIPE BY OTHER

UNLESS OTHERWISE NOTED, LINEAR DIMENSIONS SHOWN ARE IN MILLIMETERS (MM)

0 200 400 800
SCALE: 1: 10

0 400 800 1600
SCALE: 1: 20

0 1000 2000 4000
SCALE: 1: 50

US Army Corps of Engineers
Afghanistan Engineer District

SYMBOL	DESCRIPTION	DATE	APP'D

DESIGNED BY:	DATE:
PFF	09-30-09
DWN BY:	SUBMITTED BY:
ECN	BAKER
CHK BY:	FILE NO.:
NLJ	ANPSDA-202XXX

Michael Baker Jr., Inc
A unit of Michael Baker Corporation
Airside Business Park
100 Airside Drive
Moon Township, PA 15108
www.mbakercorp.com

AFGHAN NATIONAL POLICE
STANDARD DESIGN
GUARD SHACK

EXTERIOR ELEVATIONS,
BUILDING AND WALL SECTIONS

SHEET REFERENCE NUMBER:
A2

100% SUBMISSION

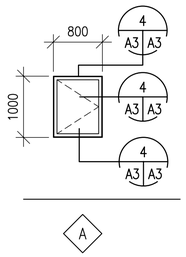

1 A3 A3 WINDOW TYPES
SCALE: 1:50

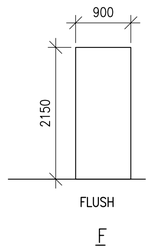

2 A3 A3 DOOR TYPES
SCALE: 1:50

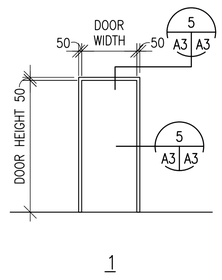

3 A3 A3 FRAME TYPES
SCALE: 1:50

WINDOW TYPES NOTES:

1. ALL EXTERIOR WINDOWS SHALL BE WOOD WITH INSECT SCREENS. WINDOWS SHALL BE COMMERCIAL GRADE.
2. GLAZING SHALL BE ACRYLIC SHEET.

DOOR TYPES NOTES:

1. INTERIOR AND EXTERIOR METAL DOORS AND FRAME COLORS SHALL MATCH ADJACENT WALL COLORS AS SELECTED BY THE CONTRACTING OFFICER.
2. HARDWARE SHALL BE HEAVY DUTY, COMMERCIAL GRADE, STAINLESS STEEL WITH A MATTE FINISH.
3. FRAMES, EXCEPT FIRE-RATED FRAMES, SHALL BE MOUNTED AND ADJUSTED IN ACCORDANCE WITH MANUFACTURER'S INSTRUCTIONS. FRAMES SHALL BE FASTENED WITH MINIMUM OF THREE FASTENING POINTS PER SIDE AT REGULAR INTERVALS.
4. DIMENSIONS SHOWN ON DOOR SCHEDULE ARE BASED UPON MODULAR MASONRY (OR ROUGH OPENING), HEIGHT OF 2200mm FOR STANDARD PERSONNEL DOORS. CONTRACTOR SHALL COORDINATE WITH DOOR SUPPLIER TO ENSURE THAT DIMENSIONS OF DOORS AND FRAMES PROVIDED ARE COMPATIBLE WITH DOOR OPENING DIMENSIONS.

HARDWARE TYPES:

HW-6 1-1/2 PR HINGES
1 EA LOCKSET,F04 ENTRY LOCK W/LEVERS. GRADE 1
1 EA DOOR CLOSER, C02061,LOW RESISTANCE
1 EA THRESHOLD J32130

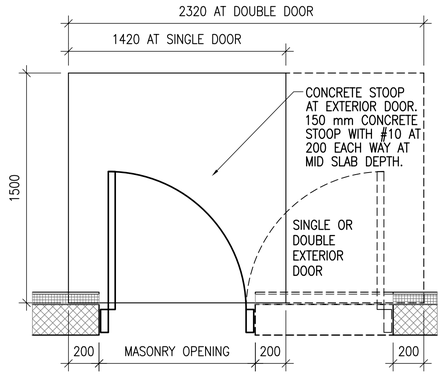

7 A3 A3 CONCRETE STOOP PLAN DETAIL
SCALE: 1:20

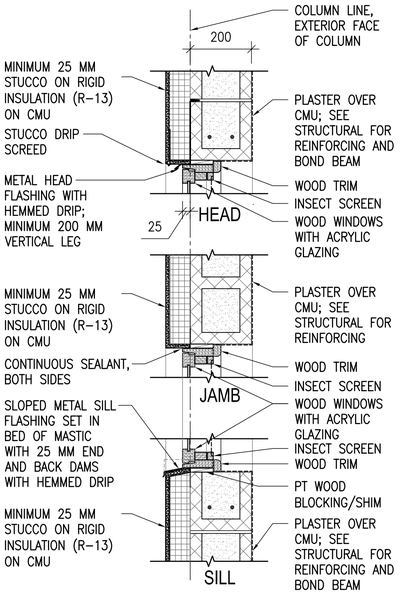

4 A2 A3 WINDOW DETAILS
SCALE: 1:10

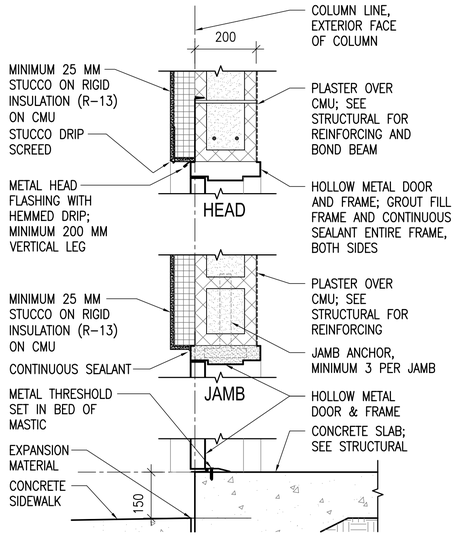

5 A3 A3 EXTERIOR DOOR DETAILS
SCALE: 1:10

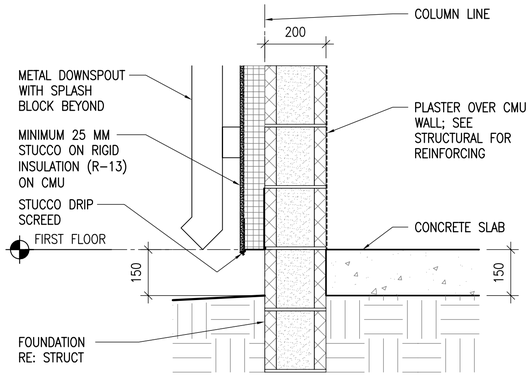

6 A2 A3 STUCCO BASE DETAIL
SCALE: 1:10

UNLESS OTHERWISE NOTED, LINEAR DIMENSIONS SHOWN ARE IN MILLIMETERS (MM)

0 200 400 800
SCALE: 1: 10

0 1000 2000 4000
SCALE: 1: 50

US Army Corps of Engineers
Afghanistan Engineer District

SYMBOL	DESCRIPTION	DATE	APP'D

DESIGNED BY: PFF	DWN BY: ECN	CHK BY: NLJ	
DATE: 09-30-09	SUBMITTED BY: BAKER	FILE NO.: ANPSDA-503XXX	

Michael Baker Jr., Inc
A unit of Michael Baker Corporation
Airside Business Park
100 Airside Drive
Moon Township, PA 15108
www.mbakercorp.com

AFGHAN NATIONAL POLICE
STANDARD DESIGN
GUARD SHACK

DOOR, WINDOW & FINISH TYPES & DETAILS

SHEET REFERENCE NUMBER:
A3

100% SUBMISSION

POWER

- DISTRIBUTION PANELBOARD
- NEW PANELBOARD – SURFACE
- NEW PANELBOARD – RECESSED
- EXISTING PANELBOARD
- (G) GENERATOR
- TVSS TRANSIENT VOLTAGE SURGE SURPRESSOR
- TRANSFORMER (DRAWN TO SIZE)
- PS POWER SUPPLY
- CP CONTROL PANEL
- TC TIME CLOCK
- TIM ASTRONOMICAL TIME CLOCK– "SEE SPEC."
- R RELAY WITH RATING AND NUMBER OF POLES AS NOTED ON DRAWINGS– "SEE SPEC."
- J JUNCTION BOX
- (J) JUNCTION BOX – CEILING
- PB PULL BOX
- BD BUS DUCT HORIZONTAL
- BUS DUCT VERTICAL
- EMERGENCY POWER OFF PUSH BUTTON
- NON–FUSIBLE SAFETY SWITCH
- FUSIBLE SAFETY SWITCH
- (M) MOTOR
- ^{M} MOTOR STARTING SWITCH – 20A RATED
- ^{K} KEY SWITCH – 20A RATED
- FC FAN COIL – FURNISHED BY MECHANICAL CONTRACTOR, ELECTRICAL CONTRACTOR SHALL INSTALL AND PROVIDE POWER CONNECTION
- UH UNIT HEATER – FURNISHED BY MECHANICAL CONTRACTOR, ELECTRICAL CONTRACTOR SHALL INSTALL AND PROVIDE POWER CONNECTION
- D JUNCTION BOX FOR CONNECTION TO GARBAGE DISPOSAL
- CF LIGHT/HEATER/FAN – FURNISHED BY MECHANICAL CONTRACTOR, ELECTRICAL CONTRACTOR SHALL INSTALL AND PROVIDE POWER CONNECTION
- ELECTRIC WATER HEATER
- EPO WEATHERPROOF / EXPLOSION PROOF EMERGENCY POWER OFF PUSH–BUTTON TO BE INTERCONNECTED WITH GENERATOR SHUT DOWN CONTROL
- CF CEILING FAN – REFER TO SPECIFICATION SECTION 26 20 00

RECEPTACLES

- DUPLEX 20A BRITISH STANDARD UNSWITCHED SOCKETS
- GF DUPLEX 20A BRITISH STANDARD UNSWITCHED SOCKETS – 10mA GROUND FAULT INTERRUPTER TYPE
- WP DUPLEX 20A BRITISH STANDARD UNSWITCHED SOCKETS – 10mA GROUND FAULT INTERRUPTER TYPE WITH WEATHERPROOF COVER
- EXP DUPLEX 20A BRITISH STANDARD UNSWITCHED SOCKETS – EXPLOSION PROOF
- * INDICATES MOUNT DEVICE ABOVE COUNTER TOP

LIGHTNING PROTECTION

- AIR TERMINAL 20mm O.D. X 4m SOLID COPPER, NICKEL PLATED ON ADHESIVE BASE.
- EQ EQUIPMENT AIR TERMINAL
- TEST WELL WITH GROUND ROD(S)
- GROUND ROD
- G GROUND PLATE
- MAIN GROUND CONDUCTER CONCEALED WITHIN CONSTRUCTION
- MAIN GROUND CONDUCTOR EXPOSED ON EXPOSED ON BUILDING EXTERIOR SURFACE
- GROUND CONDUCTOR CAD WELDED TO GROUND CABLE OR EQUIPMENT
- GROUND CONDUCTOR CAD WELDED TO BUILDING STEEL COLUMN
- GROUND ROD TRIPOD, SPACED 10 FEET APART.
- LEVEL TO LEVEL CABLE

LIGHTING

- LIGHTING FIXTURE – SEE FIXTURE SCHEDULE FOR MORE INFORMATION
- LIGHTING FIXTURE – SEE FIXTURE SCHEDULE FOR MORE INFORMATION
- DOWNLIGHT
- LIGHTING FIXTURE ON NORMAL/EMERGENCY
- WALL MOUNTED LIGHT FIXTURE
- E EXIT SIGN – DIRECTIONAL ARROWS AS INDICATED ON DRAWINGS
- B BATTERY PACK WITH HEADS AS INDICATED ON DRAWINGS
- REMOTE HEAD FOR BATTERY PACK
- $ SINGLE POLE SWITCH – 20A RATED
- ^{3} 3–WAY SWITCH – 20A RATED
- ^{4} 4–WAY SWITCH – 20A RATED
- PC PHOTOCELL VOLTAGE TO MATCH CIRCUITRY
- LC LIGHTING CONTACTOR
- POLE MOUNTED SITE LIGHTING FIXTURE– NUMBER OF FIXTURES PER POLE AS INDICATED ON DRAWINGS
- EXTERIOR DIRECTIONAL LIGHTING FIXTURE
- a SMALL CASE LETTERS REPRESENTS LAMP(S) / SWITCHES. WHEN USED WITH AN OCCUPANCY SENSOR THIS INDICATES SENSOR WITH MANUAL OVERRIDE SWITCH

TELECOMMUNICATIONS

- TELEPHONE OUTLET(S) @ 18" AFF. U.N.O. WITH 3/4" RACEWAY TERMINATED ABOVE NEAREST ACCESSIBLE CEILING OR TO TELEPHONE TERMINAL BOARD IF NO ACCESSIBLE CEILING AVAILABLE. SEE TELE/DATA RISER DIAGRAM FOR OUTLET AND CABLE DESCRIPTION
- DATA OUTLET(S) @ 18" AFF. U.N.O. WITH 3/4" RACEWAY TERMINATED ABOVE NEAREST ACCESSIBLE CEILING OR TO DATA EQUIPMENT RACK IF NO ACCESSIBLE CEILING AVAILABLE. SEE TELE/DATA RISER DIAGRAM FOR OUTLET AND CABLE DESCRIPTION

TELECOMMUNICATIONS (CONTINUED)

- COMBINATION TELEPHONE/DATA OUTLET(S) @ 18" AFF. U.N.O. WITH 1" RACEWAY TERMINATED ABOVE NEAREST ACCESSIBLE CEILING OR TO TELE/DATA TERMINAL AREA IF NO ACCESSIBLE CEILING AVAILABLE. SEE TELE/DATA RISER DIAGRAM FOR OUTLET AND CABLE DESCRIPTION
- W WALL MTD. TELEPHONE OUTLET WITH 3/4" RACEWAY TERMINATED ABOVE NEAREST ACCESSIBLE CEILING OR TO TELEPHONE TERMINAL BOARD IF NO ACCESSIBLE CEILING AVAILABLE. SEE TELE/DATA RISER DIAGRAM FOR OUTLET AND CABLE DESCRIPTION
- (x)T INDICATES NUMBER OF TELEPHONE OUTLET(S) AND ASSOCIATED CABLING
- (x)D INDICATES NUMBER OF DATA OUTLET(S) AND ASSOCIATED CABLING
- (x)TF INDICATES NUMBER OF TELEPHONE OUTLETS AND ASSOCIATED CABLING WITH 1 OUTLET AND CABLE DEDICATED FOR FAX

SINGLE LINE SYMBOLS

- SWITCH
- BREAKER
- FUSE
- TRANSFORMER
- CAPACITOR
- GROUND
- CONTACT (NORMALLY OPEN)
- CONTACT (NORMALLY CLOSED)
- AUTOMATIC TRANSFER SWITCH
- MANUAL DOUBLE THROW SWITCH
- CURRENT TRANSFORMER
- INDICATES NEW ELECTRICAL EQUIPMENT
- C INDICATES NEW CONTROL WIRING AND CONDUIT
- EQUIPMENT OUTLINE

MISCELLANEOUS

- BRANCH CIRCUIT WIRING CONCEALED ABOVE CEILINGS, SURFACE MOUNTED ON WALLS
- BRANCH CIRCUIT WIRING – #10 AWG
- BRANCH CIRCUIT WIRING – UNDER FLOOR
- HOME RUN BACK TO PANEL
- CONDUIT TURNED DOWN
- CONDUIT TURNED UP
- LV LOW VOLTAGE WIRING AND CONDUIT
- CT–X CABLE TRAY ("X" DENOTES WIDTH)
- INDICATES CONTINUATION OF LINE

FIRE ALARM

- FACP FIRE ALARM CONTROL PANEL WITH BATTERY BACKUP
- F FIRE ALARM PULL STATION

FIRE ALARM (CONTINUED)

- F FIRE ALARM STROBE – WALL MOUNTED
- F FIRE ALARM AUDIBLE/STROBE – WM
- F FIRE ALARM HORN/STROBE – WM
- S SMOKE DETECTOR
- H HEAT DETECTOR CEILING MOUNTED
- D DUCT DETECTOR – PROVIDED BY EC, INSTALLED BY MC AND CONNECTED BY EC

DENOTATIONS & ABBREVIATIONS

AFF	ABOVE FINISHED FLOOR
C	CEILING MOUNTED
E	EMERGENCY
EC	ELECTRICAL CONTRACTOR
EPO	EMERGENCY POWER OFF
EXP	EXPLOSION PROOF
F	FIRE ALARM
FF	FLUSH FLOOR MOUNTED
FL	FLUORESCENT
FO	FIBER OPTIC
FSS	FUSED SAFETY SWITCH
G	GROUND FAULT INTERRUPTER
GC	GENERAL CONTRACTOR
HOA	HAND–OFF AUTO
I	INFRARED
ICD	INCANDESCENT
IG	ISOLATED GROUND
K	KEY
LV	LOW VOLTAGE
M	MOTOR
MC	MECHANICAL CONTRACTOR
NE	NORMAL/EMERGENCY
NFSS	NON–FUSED SAFETY SWITCH
PA	PAGING SYSTEM
PLC	PLUMBING CONTRACTOR
REL	RELOCATE
RED	RELOCATED
SL	SINGLE LINE
SS	SURGE SUPPRESSION
T	TELEPHONE
TL	TWIST LOCK

DENOTATIONS & ABBREVIATIONS (CONT.)

TP	TAMPER PROOF
UE	UNDERGROUND ELECTRIC
UF	UNDERGROUND FIBER
UT	UNDERGROUND TELEPHONE
W	WALL MOUNTED
WG	WIRE GUARD
WP	WEATHERPROOF
WPG	WEATHERPROOF/GROUND FAULT INTERRUPTER
WT	WATER TIGHT

GENERAL PROJECT NOTES:

G1. UNLESS OTHERWISE NOTED, PROVIDE ALL EQUIPMENT SHOWN ON THE PLANS. THE ELECTRICAL CONTRACTOR SHALL COORDINATE ALL SYMBOLS SHOWN ON THE PLANS WITH THE SYMBOL LIST. IT SHALL BE THE RESPONSIBILITY OF THE CONTRACTOR TO VERIFY THE INTENT OF ANY SYMBOL THAT IS SHOWN ON THE PLANS AND NOT INDICATED ON THE SYMBOL LIST WITH THE ENGINEER PRIOR TO BID.

G2. COORDINATE THE FINAL LOCATIONS OF ALL LIGHT FIXTURES WITH THE ARCHITECT'S REFLECTED CEILING PLANS. REPORT ANY DISCREPANCIES TO THE ARCHITECT PRIOR TO INSTALLATION.

G3. THE CONTRACTOR SHALL VERIFY THE LOCATION OF ALL UNDERGROUND UTILITIES WITHIN THE CONSTRUCTION AREA THREE (3) WORKING DAYS NOTICE BEFORE COMMENCE DIGGING. NOTIFY THE LOCAL OR STATE AUTHORITY HAVING JURISDICTION AND WAIT THE REQUIRED TIME BEFORE COMMENCING TO DIG.

G4. THE CONTRACTOR SHALL COORDINATE CONDUIT RUNS, CABLE TRAY, LIGHTING FIXTURES AND OTHER EQUIPMENT LOCATIONS WITH THE OTHER TRADE CONTRACTORS TO AVOID CONFLICTS.

G5. WHERE VOLTAGES AND FREQUENCIES ON THE DRAWINGS AND IN THE SPECIFICATIONS DIFFER FROM THE LOCAL ONES, ALL WORK SHALL BE PERFORMED USING THE LOCAL VOLTAGES AND FREQUENCIES.

G6. THE MINIMUM WIRE SIZE ON THE PROJECT SHALL BE 4mm2. THE MINIMUM CONDUIT SIZE SHALL BE 20mm. THE MINIMUM BREAKER SIZE SHALL BE 20 AMPS.

G7. THE CONTRACTOR SHALL PUT A MAXIMUM OF 6 DUPLEX SOCKETS ON A 20A SINGLE POLE CIRCUIT.

G8. WHERE THE 1010 SCOPE REVIEW, 1015 TECHNICAL REVIEW, DRAWINGS, AND SPECIFICATIONS DIFFER FROM AMERICAN CODES OR STANDARDS THE 1010, 1015, DRAWINGS, AND SPECIFICATIONS SHALL RULE.

G9. WORK FOR THE AMMUNITION SUPPLY POINT SHALL BE DONE IN ACCORDANCE WITH DEPARTMENT OF DEFENSE STANDARD DOD 6055.9–STD.

G10. ALL CONDUIT AND DEVICES SHALL BE SURFACE MOUNTED UNLESS OTHERWISE INDICATED.

US Army Corps of Engineers
Afghanistan Engineer District

SYMBOL	DESCRIPTION	DATE	APP

DESIGNED BY:	DATE:
JRG	09–30–09
DWN BY:	SUBMITTED BY:
JRG	BAKER
CHK BY:	FILE NO.:
JRG	ANPSDE–000XXX

Michael Baker Jr, Inc
A unit of Michael Baker Corporation
Airside Business Park
100 Airside Drive
Moon Township, PA 15108
www.mbakercorp.com

AFGHAN NATIONAL POLICE
STANDARD DESIGN
GUARD SHACK

ELECTRICAL SYMBOLS AND ABBREVIATIONS

SHEET REFERENCE NUMBER:
E0

100% SUBMISSION

GENERAL NOTES:

1. REFER TO DRAWING #E0 FOR THE ELECTRICAL SYMBOLS LIST.
2. EXIT SIGNS SHALL BE WIRED AHEAD OF ANY LOCAL SWITCHING ON CIRCUITS.
3. REFER TO DRAWING #E3 FOR THE LIGHTING FIXTURE SCHEDULE.
4. REFER TO DRAWING #E2 FOR THE POWER RISER.
5. REFER TO DRAWING #E4 FOR PANEL SCHEDULES.
6. LIGHT FIXTURES INDICATED AS EMERGENCY SHALL BE PROVIDED WITH A BATTERY BACKUP BALLAST.
7. COORDINATE EXACT MOUNTING LOCATION OF DISCONNECTING MEANS FOR MECHANICAL AND PLUMBING EQUIPMENT IN THE FIELD.
8. FUSIBLE SAFETY SWITCHES THAT ARE NOT OTHERWISE IDENTIFIED SHALL BE 380V, 1P, 30A FUSED SAFETY SWITCHES WITH 20A FUSES.

NUMBERED NOTES:

(1) PANEL L.

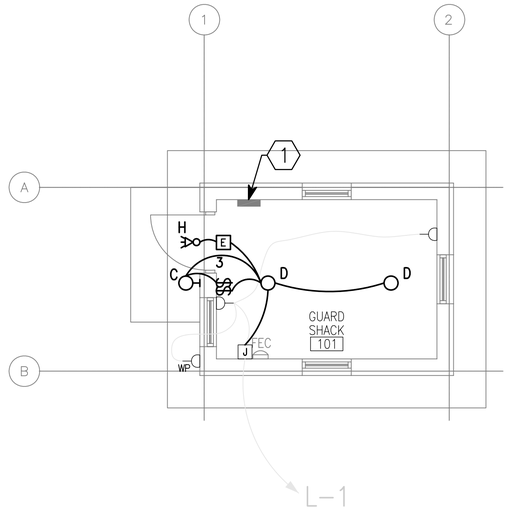

1 / E1 | E1 LIGHTING AND POWER PLAN

SCALE: 1:50

N

UNLESS OTHERWISE NOTED, LINEAR DIMENSIONS SHOWN ARE IN MILLIMETERS (MM)

1 0 1 2 3 4

1:50

US Army Corps of Engineers

Afghanistan Engineer District

SYMBOL	DESCRIPTION	DATE	APP'D

DESIGNED BY: JRG	DWN BY: JRG	CHK BY: JRG	
DATE: 09-30-09	SUBMITTED BY: BAKER	FILE NO.: ANPSDE-101XXX	

Michael Baker Jr., Inc
A unit of Michael Baker Corporation
Airside Business Park
100 Airside Drive
Moon Township, PA 15108
www.mbakercorp.com

AFGHAN NATIONAL POLICE
STANDARD DESIGN
GUARD SHACK

LIGHTING AND POWER PLAN

SHEET REFERENCE NUMBER:

E1

100% SUBMISSION

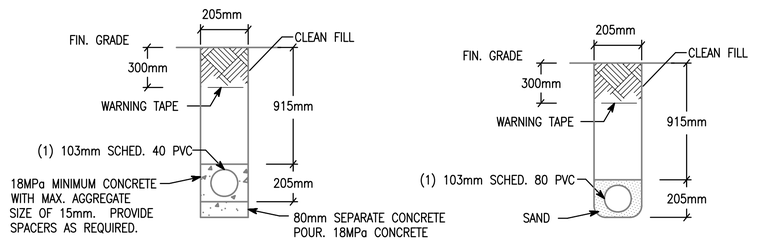

NOTE: PVC CONDUIT SHALL BE DIRECT BURIED SCHEDULE 80 FOR NO TRAFFIC AREAS AND CONCRETE-ENCASED SCHEDULE 40 FOR UNDER ROADWAYS OR TRAFFIC AREAS.

1 E2 | E2 **TYPICAL DUCT BANK DETAILS FOR CONDUIT IN SAND OR CONCRETE**

SCALE: N.T.S.

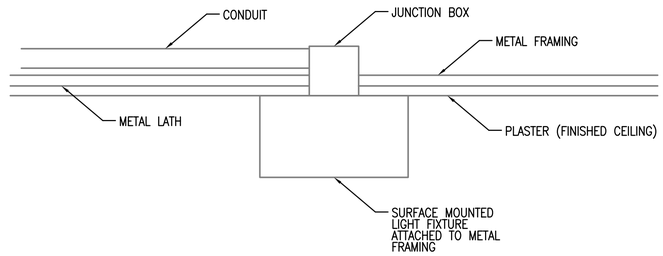

2 E2 | E2 **TYPICAL DETAIL FOR SURFACE MOUNTED LIGHT FIXTURES**

SCALE: N.T.S.

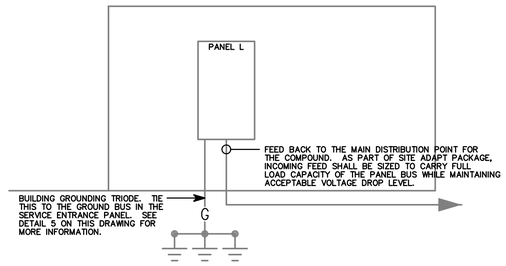

3 E2 | E2 **L RISER DIAGRAM**

SCALE: N.T.S.

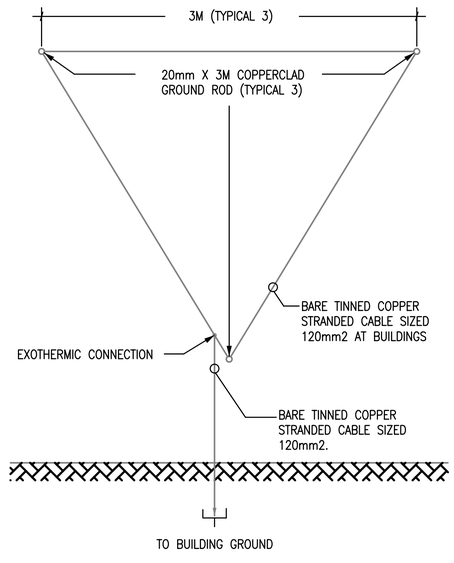

4 E2 | E2 **GROUND TRIPOD SYSTEM DETAIL - PLAN**

SCALE: N.T.S.

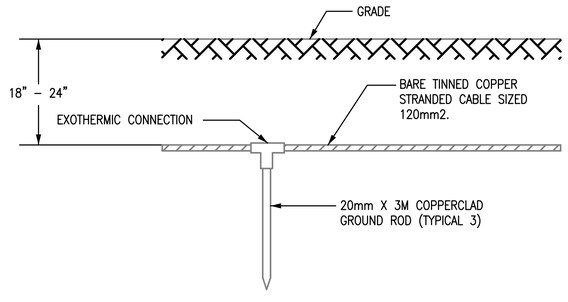

5 E2 | E2 **GROUND TRIPOD SYSTEM DETAIL - ELEVATION**

SCALE: N.T.S.

US Army Corps of Engineers
Afghanistan Engineer District

SYMBOL	DESCRIPTION	DATE	APP'D

DESIGNED BY:	DATE:
JRG	09-30-09
DWN BY:	SUBMITTED BY:
JRG	BAKER
CHK BY:	FILE NO.:
JRG	ANPSDE-502XXX

Michael Baker Jr., Inc.
A unit of Michael Baker Corporation
Airside Business Park
100 Airside Drive
Moon Township, PA 15108
www.mbakercorp.com

AFGHAN NATIONAL POLICE
STANDARD DESIGN
GUARD SHACK

DETAILS

SHEET REFERENCE NUMBER:

E2

100% SUBMISSION

FIXTURE MARK 'C'

INCANDESCENT ONE PIECE WITH APPROVED LENS, STABILIZED HIGH IMPACT POLY CARBONATE

FIXTURE MARK 'D'

SURFACE MOUNTED, SINGLE LAMP 220–240V INCANDESCENT FIXTURE RATED FOR 100W LAMPS. GLASS GLOBE SHALL BE VAPOR TIGHT JELLY JAR TYPE WITH WIRE GUARD. NOMINAL DIMENSIONS ARE 111MMx251MM

FIXTURE MARK 'H'

REMOTE HEAD EXTERIOR LIGHT HEAD POWERED FROM EXIT SIGN BATTERY– 12V DOUBLE HEAD CORROSION RESISTANT WITH UL34 WEATHERPROOF CONSTRUCTION

FIXTURE MARK 'E'

UNIVERSAL MOUNT ENGINEER GRADE THERMOPLASTIC HOUSING EXIT SIGN WITH LED LAMPS, RED LETTERS 6" IN HEIGHT WITH ARROWS AS INDICATED, WITH 12V CADMIUM BATTERY

LIGHTING FIXTURE SCHEDULE

FIXTURE MARK	STYLE NUMBER AND TYPE	NUMBER AND TYPE OF LAMPS	VOLTAGE	MOUNTING	NOTES
C	INCANDESCENT ONE PIECE W/ APPROVED LENS STABILIZED HIGH IMPACT POLY CARBONATE.	(1) A19 – 100W INCANDESCENT	220V – 1ø 50HZ	WALL MOUNTED ABOVE EXTERIOR DOORS	
D	SURFACE MOUNTED SINGLE LAMP 220–240V INCANDESCENT FIXTURE RATED FOR 100W LAMPS. GLASS GLOBE SHALL BE VAPOR TIGHT JELLY JAR WITH WIRE GUARD. 111MM–251MM	(1) A21 – 100W COATED INCANDESCENT	220V – 1ø 50HZ	SURFACE MOUNTED FROM ROOF STRUCTURE	MEETS INTERNATIONAL STANDARDS WITH ENCLOSED AND GASKETED RED LENS.
H	REMOTE HEAD EXTERIOR LIGHT HEAD POWERED FROM EXIT SIGN BATTERY– 12V DOUBLE HEAD CORROSION RESISTANT WITH UL34 WEATHERPROOF CONSTRUCTION	(2) 12W/12V HALOGEN LAMP	12V – 1ø 50HZ	EXTERIOR WALL MOUNTED AT TOP OF DOOR HEIGHT	
E	UNIVERSAL MOUNT ENGINEER GRADE THERMOPLASTIC HOUSING EXIT SIGN WITH LED LAMPS, RED LETTERS 6" IN HEIGHT WITH ARROWS AS INDICATED, WITH 12V CADMIUM BATTERY WITH REMOTE HEAD CAPABILITY	LED LAMPS	220V – 1ø 50HZ	UNIVERSAL MOUNTING	

US Army Corps of Engineers
Afghanistan Engineer District

SYMBOL	DESCRIPTION	DATE	APP'D

DESIGNED BY: JRG
DWN BY: JRG
CHK BY: JRG
DATE: 09-30-09
SUBMITTED BY: BAKER
FILE NO.: ANPSDE-603XXX

Michael Baker Jr., Inc
A unit of Michael Baker Corporation
Airside Business Park
100 Airside Drive
Moon Township, PA 15108
www.mbakercorp.com

AFGHAN NATIONAL POLICE
STANDARD DESIGN
GUARD SHACK

LIGHT FIXTURE SCHEDULE

SHEET REFERENCE NUMBER:
E3

100% SUBMISSION

PANELBOARD L SURFACE MOUNTED ASYM. A.I.C. MIN.
AMP. MAIN LUGS (OR) 100 AMP. MAIN BREAKER W/ 100 AMP. TRIP
CIRCUIT BREAKER TYPE 380/220 VOLTS 3 PHASE 4 WIRE 50 HZ 100 AMP. BUS

CKT. NO.	TRIP AMPS	NO. POLES	WIRE MM²	GND MM²	CONDUIT MM	LOAD SERVED	LOAD-V.A. AØ	LOAD-V.A. BØ	LOAD-V.A. CØ	LOAD-V.A. AØ	LOAD-V.A. BØ	LOAD-V.A. CØ	LOAD SERVED	CONDUIT MM	GND MM²	WIRE MM²	NO. POLES	TRIP AMPS	CKT. NO.
1	20	1	4.0	4.0	20	LIGHTING AND RECEPTACLES- 101	1.0						SPARE				1	20	2
3	20	1				SPARE							SPARE				1	20	4
5	20	1				SPARE							SPARE				1	20	6
7	20	1				SPARE							SPARE				1	20	8
9	20	1				SPARE							SPARE				1	20	10
11	20	1				SPARE							SPARE				1	20	12
							0.6	0.5	0.0	0.6	0.0	0.0							

TOTAL CONN. LOAD PER PHASE (KVA): AØ 1.0 BØ 0.0 CØ 0.0

TOTAL CONN. LOAD 1.0 KVA. 70 % DEMAND = ESTIMATED DEMAND LOAD 0.7 SUPPLIED FROM MAIN SWITCHGEAR DISTRIBUTION

• MAIN BREAKER SHALL BE 3P EARTH GROUND TYPE

US Army Corps of Engineers
Afghanistan Engineer District

SYMBOL	DESCRIPTION	DATE	APP.

DESIGNED BY: JRG	DATE: 09-30-09
DWN BY: JRG	SUBMITTED BY: BAKER
CHK BY: JRG	FILE NO.: ANPSDE-604XXX

Michael Baker Jr., Inc
A unit of Michael Baker Corporation
Airside Business Park
100 Airside Drive
Moon Township, PA 15108
www.mbakercorp.com

AFGHAN NATIONAL POLICE
STANDARD DESIGN
GUARD SHACK

PANEL SCHEDULES AND RISER DIAGRAM

SHEET REFERENCE NUMBER:
E4

100% SUBMISSION

ENGINEERING AND CONSTRUCTION DIVISION
US ARMY ENGINEER DISTRICT, AFGHANISTAN
APO AE, 09356

CONTRACT NO.

GUARD HOUSE

AFGHANISTAN

SECTION/DETAIL CROSS REFERENCING CONVENTIONS

ELEVATION

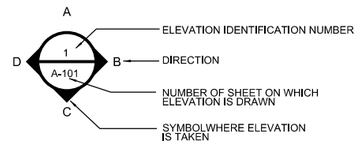

SECTION

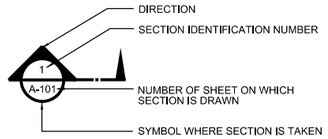

DETAIL

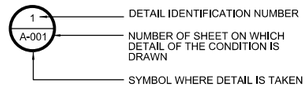

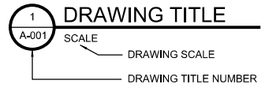

SCHEDULE OF DRAWINGS

SHEET NO	DWG CODE	SHEET REFERENCE NO	DESCRIPTION	REV STATUS
			GENERAL	
		G-001	TITLE SHEET & SCHEDULE OF DRAWINGS	
			STRUCTURAL	
		S-101	FOUNDATION AND ROOF FRAMING PLANS	
		S-501	STRUCTURAL DETAILS	
		S-502	STRUCTURAL DETAILS	
		S-601	STRUCTURAL SCHEDULES	
		S-602	STRUCTURAL METERIAL SCHEDULES	
			ARCHITECTURAL	
		A-101	FLOOR PLAN, ROOF PLAN, AND REFLECTED CEILING PLAN	
		A-201	ELEVATIONS, BUILDING SECTION, AND EAVE DETAIL	
		A-601	DOOR & FINISH SCHEDULES AND DETAILS	
			MECHANICAL	
		M-101	MECHANICAL PLAN	
			PLUMBING	
		P-101	FLOOR PLAN - PLUMBING	
		P-901	PLUMBING ISOMETRICS	
			ELECTRICAL	
		E-101	ELECTRICAL PLANS	

PROJECT COORDINATION

U.S. ARMY ENGINEER DISTRICT, AFGHANISTAN

PROJECT MANAGER _____ DATE _____

CHIEF, DESIGN BRANCH _____ DATE _____

THIS PROJECT WAS DESIGNED BY AFGHANASTAN ENGINEER DISTRICT OF THE U,S ARMY CORPS OF ENGINEERS. THE INITIALS OR SIGNATURES AND REGISTRATION DESIGNATIONS OF INDIVIDUALS APPEAR ON THESE DOCUMENTS WITHIN THE SCOPE OF THEIR EMPLOYMENT AS REQUIRED BY ER 1110-1-8152.

US Army Corps of Engineers
AFGHANISTAN ENGINEER DISTRICT

APPR. DATE DESCRIPTION
APPR. DATE DESCRIPTION
MARK MARK

DESIGNED BY:
DWN BY:
CKD BY:
SUBMITTED BY:
DATE:
SOLICITATION NO.:
CONTRACT NO.:
FILE NUMBER:
PLOT SCALE: 1:1
PLOT DATE:
SIZE:
FILE NAME: FP07_G-001.dgn

U.S. ARMY CORPS OF ENGINEERS
AFGHANISTAN DISTRICT
APO AE 09356

SITE ADAPT DESIGN
FP07 - GUARD HOUSE
TITLE SHEET
SCHEDULE OF DRAWINGS

SHEET IDENTIFICATION
G-001
SHEET 1 OF 13

$FILE$ $TIME$
$DATE$

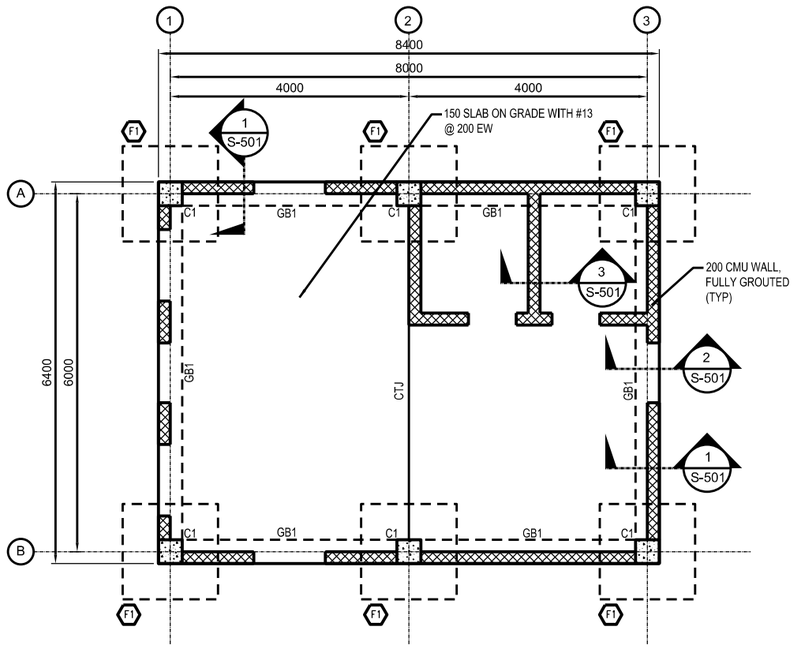

1 S-101 **FOUNDATION PLAN**
SCALE: 1:50

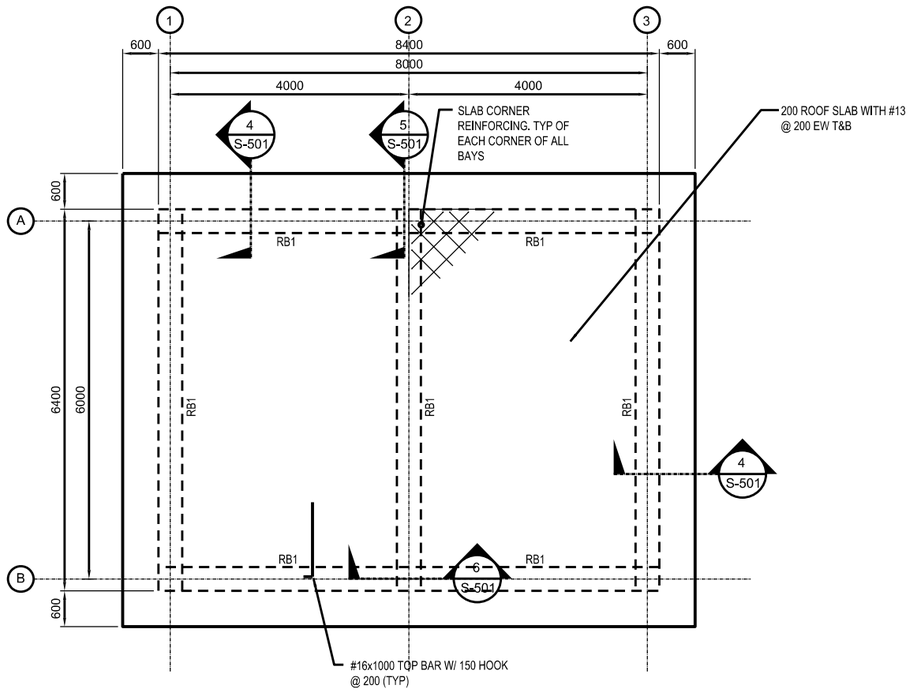

2 S-101 **ROOF FRAMING PLAN**
SCALE: 1:50

GENERAL NOTES

1. DESIGN LOADS (SERVICE)

LIVE LOADS:

ROOF: 1.0 KPA (20 PSF)
OTHERS: 4.8 KPA (100 PSF)
8.9 KN (2.0 K) CONCENTRATED LOAD

WIND LOADS PER IBC-2003

USING A "3-SECOND" WIND VELOCITY OF 125 KPH
EXPOSURE C AND IMPORTANCE FACTOR I=1.0

EARTHQUAKE LOADS PER IBC-2003:

USING A SEISMICITY: Ss=1.65g AND S_1=0.75g

2. MATERIALS:

CONCRETE: 28 MPa (4 KSI) - CYLINDER STRENGTH AT 28 DAYS

REINFORCING: ASTM A615 GRADE 60 (60 KSI)

CONCRETE MASONRY UNITS:
ASTM C90, TYPE I (NORMAL WEIGHT, MOISTURE CONTROLLED) MORTAR, ASTM C270, TYPE S GROUT, ASTM C 476

3. WORK THESE STRUCTURAL DRAWINGS WITH THE STANDARD-DETAILS DRAWINGS.

4. A RELATIVE (DATUM) FINISH FLOOR ELEVATION EQUAL TO 0.00 M. IS USED AS REFERENCE ELEVATION FOR ALL STRUCTURAL DRAWINGS. COORDINATE WITH SITE SPECIFIC GRADING PLAN TO BE PROVIDED BY CONTRACTOR.

5. FOUNDATIONS ARE DESIGNED USING AN ALLOWABLE BEARING PRESSURE OF 0.75 KG/SQ. CM (1500 PSF), AND BOTTOM OF FOOTINGS ARE PLACED AS SHOWN ON DRAWINGS. GEOTECHNICAL INVESTIGATION SHALL CONFIRM BEARING CAPACITY TO BE NO LESS THAN 0.75 KG/SQ CM. IF GEOTECHNICAL INVESTIGATION SHOWS LESS THAN 0.75 KG/SQ CM THE CONTRACTOR SHALL REDESIGN FOOTINGS BASED ON THE GEOTECHNICAL INVESTIGATION. SEE SPECIFICATION 01015 PARAGRAPH, GEOTECHNICAL, FOUNDATION AND SURVEY.

6. FOR BUILDING NORTH ORIENTATION SEE SHEET C-1.

NOTES

1. ALL CELLS OF CMU WALL SHALL BE FULLY GROUTED - SEE PLATE S-601 FOR REINFORCING REQUIREMENTS.
2. SEE PLATE S-601 FOR FOOTING, COLUMN, BEAM, AND CMU REINFORCING SCHEDULES.

GRAPHIC SCALE

2500 1000 500 0 2500 5000

SCALE: 1 : 50

US Army Corps of Engineers
AFGHANISTAN ENGINEER DISTRICT

MARK	DESCRIPTION	DATE	APPR.

DESIGNED BY:
DWN BY:
CKD BY:
SUBMITTED BY:
DATE:
SOLICITATION NO.:
CONTRACT NO.:
PLOT SCALE: 1:50
PLOT DATE:
SIZE:
FILE NUMBER:
FILE NAME: FP07S-101.dgn

U.S. ARMY CORPS OF ENGINEERS
AFGHANISTAN DISTRICT
APO AE 09356

SITE ADAPT DESIGN
FP07 - GUARD HOUSE
FOUNDATION AND ROOF FRAMING PLANS

SHEET IDENTIFICATION
S-101
SHEET 2 OF 13

$FILE$ $TIME$
$DATE$

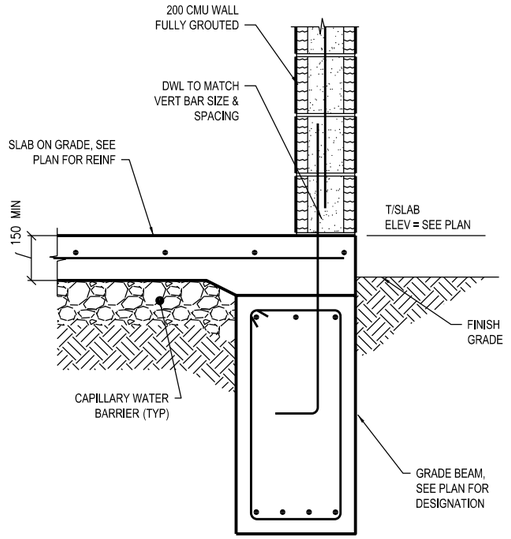

1 S-501 SECTION
SCALE = 1:10

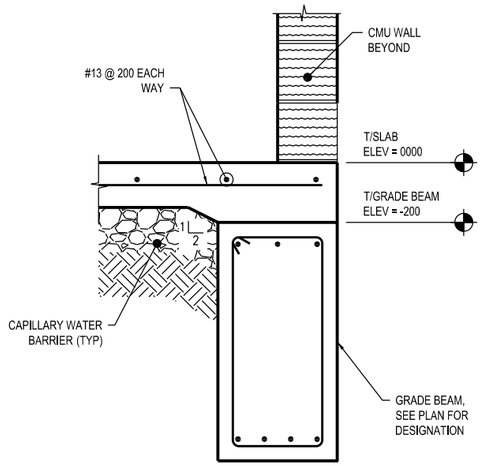

2 S-501 SECTION
SCALE = 1:10

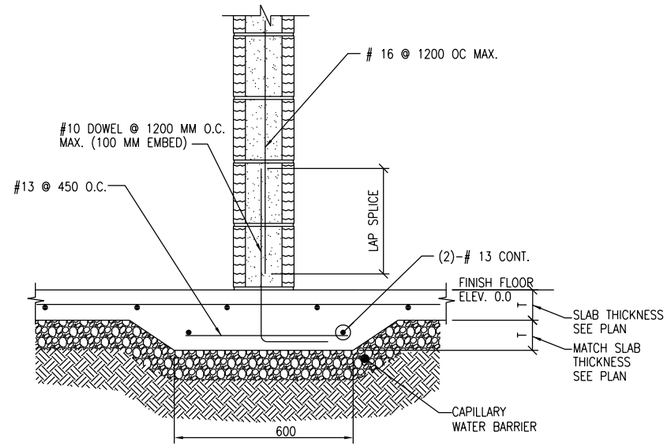

3 S-501 SECTION
SCALE = 1:10

NOTE: REFERENCE ARCHITECTURAL DRAWINGS FOR OVERFRAMING ABOVE ROOF SLAB

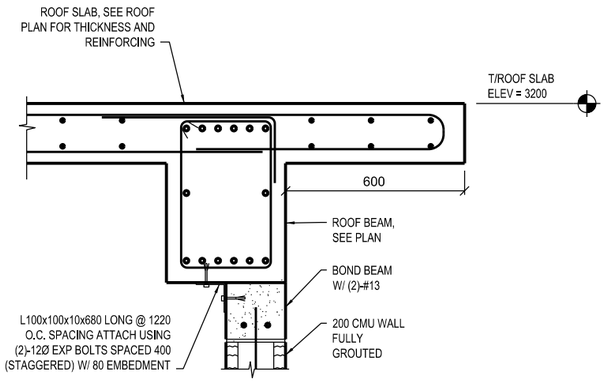

4 S-501 SECTION
SCALE = 1:10

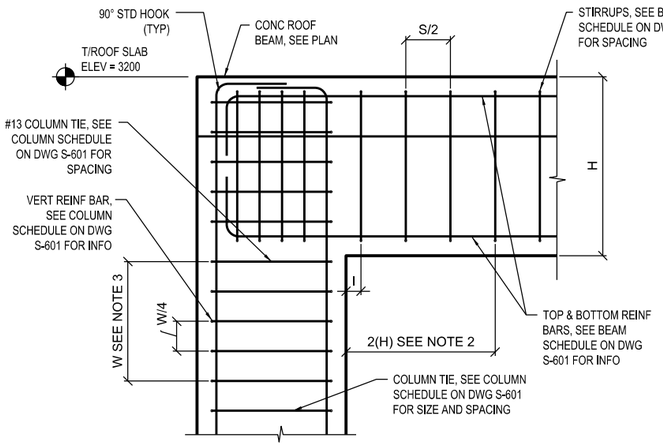

5 S-501 BEAM/COLUMN REINFORCING DETAIL
SCALE = 1:10

SECTION NOTES:
1. COLUMN/BEAM REINFORCEMENT AT OUTSIDE CORNERS AND BEAM ENDS.
2. PROVIDE STIRRUPS IN BEAM ENDS AT SPACING OF "S/2" FOR A DIATANCE OF "2(H)" MEASURE FROM FACE OF COLUMN. TYPICAL EACH END OF BEAM.
3. PROVIDE COLUMN TIES AT BEAM/COLUMN JOINTS AT A SPACING OF "W/4" FOR A DISTANCE OF "W" MEASURED FROM BOT OF BEAM.
4. "S" DENOTES TIE SPACING FOR BOTTOM BARS AT COLUMN, SEE SCHEDULE ON DWG S-601.
4. "W" DENOTES WIDTH OF COLUMN, SEE SCHEDULE ON S-601

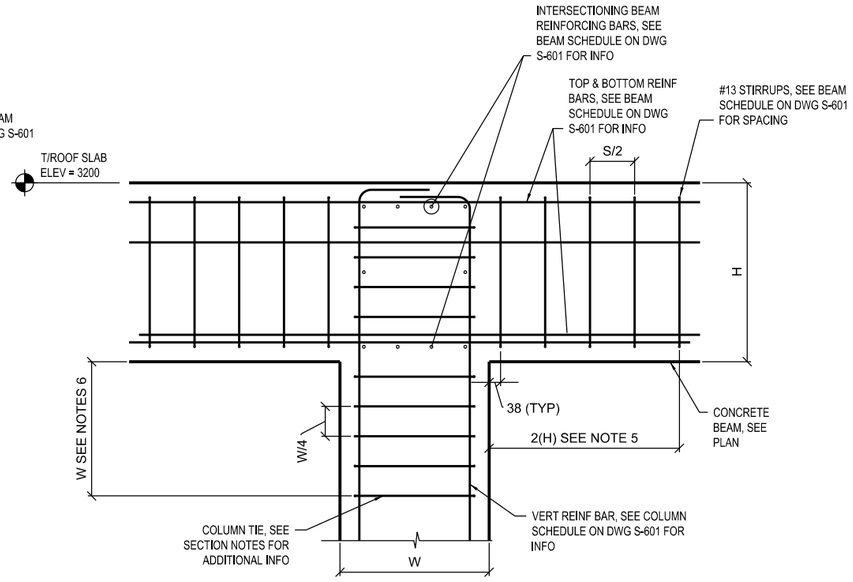

6 S-501 BEAM/COLUMN REINFORCING DETAIL
SCALE = 1:10

GRAPHIC SCALE
500 200 100 0 500 1000
SCALE: 1 : 10

US Army Corps of Engineers
AFGHANISTAN ENGINEER DISTRICT

MARK	DESCRIPTION	DATE	APPR.
MARK	DESCRIPTION	DATE	APPR.

DESIGNED BY:
DWN BY:
CKD BY:
SUBMITTED BY:
DATE:
SOLICITATION NO.:
CONTRACT NO.:
PLOT SCALE: 1:100
PLOT DATE:
FILE NUMBER:
SIZE:
FILE NAME: FP07-S-501.dgn

U.S. ARMY CORPS OF ENGINEERS
AFGHANISTAN DISTRICT
APO AE 09356

SITE ADAPT DESIGN
FP07 - GUARD HOUSE
STRUCTURAL DETAILS

SHEET IDENTIFICATION
S-501
SHEET 3 OF 13

$FILE$ $DATE$ $TIME$

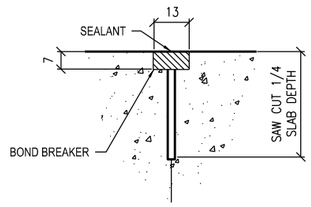

CONTROL JOINT DETAIL

1 S-502 TYPICAL CONCRETE SLAB JOINT FINISH DETAIL

NTS

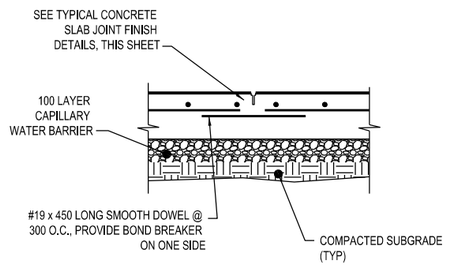

CONTROL JOINT DETAIL (CTJ)

2 S-502 TYPICAL SLAB ON GRADE JOINT DETAILS

NTS

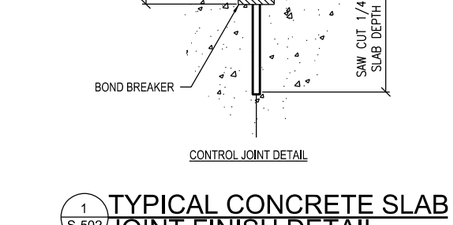

3 S-502 ELEVATED SLAB CORNERS

NTS

ADD'L REINFORCEMENT DETAILS

1. WHERE MORE THAN ONE ADDITIONAL BAR IS REQUIRED PARALLEL TO THE EXISTING SLAB/WALL REINFORCING THE ADDITIONAL REINFORCING BARS SHALL BE SPACED AT 100 ON CENTER.
2. ADDITIONAL REINFORCING PARALLEL TO THE SLAB/WALL REINFORCING SHALL BE #16 BARS THAT PROVIDE A STEEL AREA ON EACH SIDE OF THE OPENING EQUAL TO 1/2 THE AREA OF THE REINFORCING CUT BY THE OPENING.

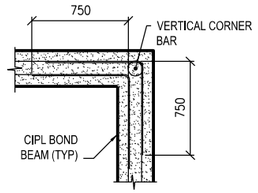

BOND BEAM CORNER

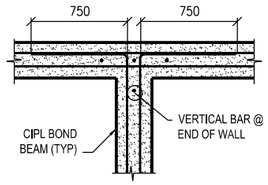

BOND BEAM INTERSECTION

4 S-502 CMU BOND DETAIL

NTS

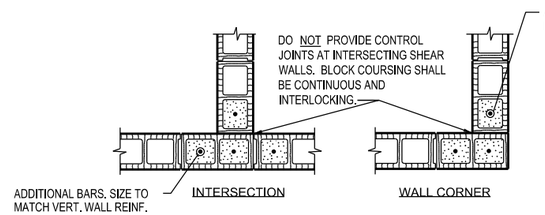

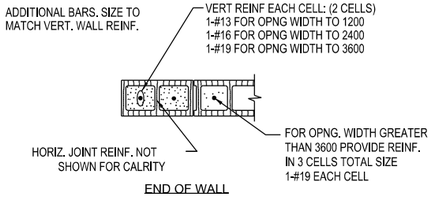

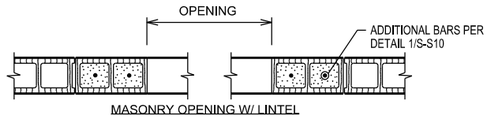

MASONRY OPENING W/ LINTEL

TYPICAL CONCRETE MASONRY UNIT DETAILS

NOTE:
OPNG WIDTH SHALL NOT EXCEED
3600 FOR THIS TYPE OF JAMB

5 S-502 TYPICAL CMU DETAILS

SCALE

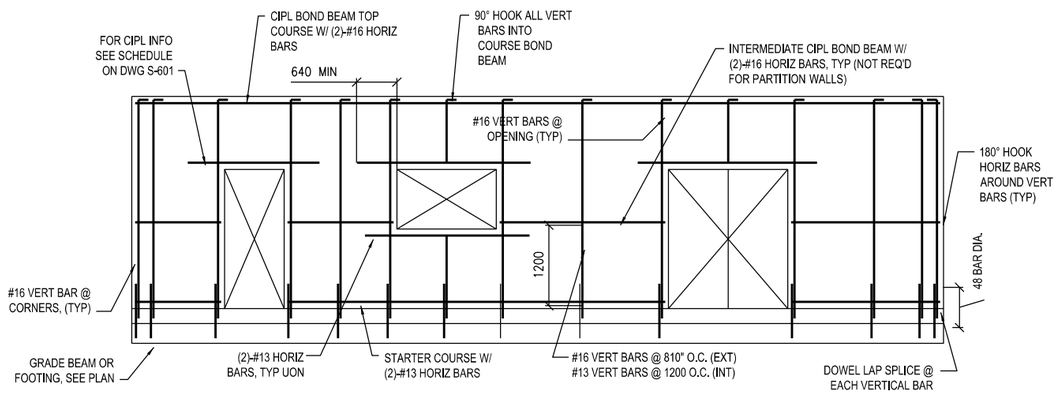

6 S-502 MIN MASONRY WALL REINFORCING

NTS

LINTEL NOTES:
CMU LINTEL REINFORCEMENT AS PER SCHEDULE ON DWG S-S4

GRAPHIC SCALE

500 200 100 0 500 1000

SCALE: 1 : 10

US Army Corps of Engineers
AFGHANISTAN ENGINEER DISTRICT

MARK	DESCRIPTION	DATE	APPR.
MARK	DESCRIPTION	DATE	APPR.

DESIGNED BY:
DWN BY:
CKD BY:
SUBMITTED BY:
DATE:
SOLICITATION NO.:
CONTRACT NO.:
FILE NUMBER:
PLOT SCALE: 1:1
PLOT DATE:
SIZE:
FILE NAME: FP07-S-502c.dgn

U.S. ARMY CORPS OF ENGINEERS
AFGHANISTAN DISTRICT
APO AE 09356

SITE ADAPT DESIGN
FP07 - GUARD HOUSE
STRUCTURAL DETAILS

SHEET IDENTIFICATION
S-502
SHEET 4 OF 13

$FILE$ $DATE$ $TIME$

CAST-IN-PLACE CONCRETE LINTEL SCHEDULE

OPENING TYPE OR SIZE, BEAM LOCATION OR TYPE	MAX SPAN (mm)	BEAM DEPTH (mm)	MAIN REINFORCING			SHEAR REINF STIRRUPS
			TOP	BOTTOM	OTHER	
EXT WALL OPENING, 1-STORY BLDG	1800	400	(2)-#13	(2)-#13		
EXT WALL OPENING, 1-STORY BLDG	900	200		(2)-#13		
INT WALL OPENING, NON-BEARING	1800	200		(2)-#13		
INT WALL OPENING, NON-BEARING	900	200		(2)-#13		

1. STRUCTURAL DRAWINGS DO NOT INDICATE ALL OPENINGS IN MASONRY WALLS. VERIFY NUMBER, SIZE AND LOCATION OF ALL OPENINGS IN MASONRY WALLS FROM ARCHITECTURAL DRAWINGS AND APPROVED PLUMBING, MECHANICAL, AND ELECTRICAL SHOP DRAWINGS.
2. PROVIDE 200 BEARING EA. END FOR 200 DEEP CIB. PROVIDE 400 BEARING EA. END FOR 400 DEEP CIB.
3. FOR HEAD DETAILS REFER TO ARCHITECTURAL DRAWINGS.
4. REINFORCING SHALL BE ASTM A615M, GRADE 400. CONCRETE FOR CAST-IN-PLACE BEAMS SHALL HAVE A MINIMUM COMPRESSIVE STRENGTH OF 21 MPa AT 28 DAYS.
5. CONTRACTOR SHALL SUBMIT FOR APPROVAL SHOP DRAWINGS AND SCHEDULES SHOWING SIZE, DETAILS, LOCATIONS, ETC. FOR ALL CAST-IN-PLACE BEAMS IN CMU WALLS.

CONCRETE COLUMN SCHEDULE

MARK	SIZE	REINFORCING			REMARKS
	(LxW)	1ST FLOOR	2ND FLOOR	STIRRUPS	
C1	400x400	(12)-#19	-	#13 @ 200	SPACE TOP 3 TIES @ 125mm

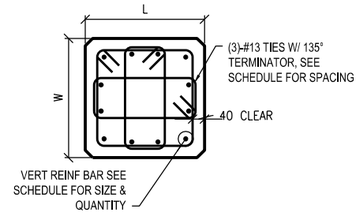

1 S-601 COLUMN DETAIL
SCALE = 1:10

CONCRETE BEAM SCHEDULE

GRADE BEAM

MARK	SIZE	REINFORCING				REMARKS
	(BxH)	TOP	BOTTOM	STIRRUPS	MIDBAR	
GB1	400x950	(6)-#16	(6)-#16	#13 @ 200	(2) #19 EF	TOP BAR LAP AT CENTER BOT BAR LAP PAST COL

ROOF BEAM

MARK	SIZE	REINFORCING				REMARKS
	(BxH)	TOP	BOTTOM	STIRRUPS	MIDBAR	
RB1	400x600	(6)-#16	(6)-#16	#13 @ 300	#19 EF	TOP BAR LAP AT CENTER BOT BAR LAP PAST COL

SPREAD FOOTING AND PIER SCHEDULE

MARK	FOOTING SIZE			FOOTING REINFORCING	PIER				REMARKS
	LENGTH	WIDTH	THICKNESS		SIZE	T/PIER	VERT. BARS	TIES	
F1	2400	1700	300	(7)-#13 E.W., TOP (7)-#19 E.W., BOTT	—	—	—	—	—

NOTES:
1. DIMENSIONS NOTED ARE MILLIMETERS (mm) U.N.O.
2. T/PIER EL GIVEN IN REFERENCE TO 0,0 mm DATUM OR FINISH FLOOR EL/SLAB EL, DISTANCE ABOVE OR BELOW INDICATED AS NEGATIVE OR POSITIVE.
3. PIER SIZE INDICATED IS SQUARE (DIMENSION SAME IN BOTH DIRECTIONS) U.N.O.

TYPICAL CMU WALL REINFORCING SCHEDULE

WALL TYPE OR LOCATION	WALL THICKNESS	CONT. VERT. REINF. (CENTERED IN CMU, U.N.O.)	CONT. CAST IN PLACE LINTEL (CIPL)			REMARKS
			DEPTH	REINF. (BOT U.N.O.)	MAX. CIPL VERT. SPACING	
ALL PERIMETER/EXTERIOR WALLS (U.N.O.)	200	1-#16 @ 600	200	2-#16	1200	—
NON-LOAD BEARING INTERIOR WALLS WITH TOP AND BOTT. SUPPORTS	200	1-#13 @ 1200	200	2-#16	1200	—

NOTES:
1. REINFORCING SIZES AND SPACING GIVEN IN SECTIONS AND DETAILS SHALL SUPERSEDE THE ABOVE SCHEDULE REQUIREMENTS.
2. PROVIDE CONTINUOUS CAST IN PLACE CONCRETE LINTEL AT ALL WALL LATERAL SUPPORT LOCATIONS.
3. REINFORCING INDICATED SHALL BE CONTINUOUS FOR FULL EXTENT OF SPLICE FOLLOWING THE REQUIREMENTS OF THE LAP SPLICE TABLE SHOWN ON THIS SHEET.
4. WALLS HAVE BEEN DESIGNATED AS VERTICALLY SPANNING U.N.O. AND THEREFORE MUST BE TEMPORARILY SUPPORTED DURING CONSTRUCTION UNTIL THE SUPPORTING DIAPHRAGMS (FLOOR AND ROOF SYSTEMS) HAVE BEEN COMPLETELY INSTALLED. SHORING IS THE RESPONSIBILITY OF THE CONTRACTOR.
5. ALL CMU WALLS SHALL BE FULLY GROUTED IN LIFTS NOT EXCEDING THOSE BY CODE (UNO)
6. SEE TYPICAL CMU WALL DETAILS ON S-502.

MASONRY REINFORCING MINIMUM LAP SPLICES

BAR SIZE	BASIC LAP SPLICE Ld FOR CMU REINFORCING
#10	450
#13	600
#16	750
#19	900
#22	1050
#25	1200

US Army Corps of Engineers
AFGHANISTAN ENGINEER DISTRICT

APPR. DATE DESCRIPTION MARK
APPR. DATE DESCRIPTION MARK

DESIGNED BY: DWN BY: SUBMITTED BY:
CKD BY:
DATE: SOLICITATION NO.: CONTRACT NO.: FILE NUMBER:
PLOT SCALE: 1:1.00 SIZE: D
PLOT DATE: FILE NAME: FP07-S-601-Lvdgn

U.S. ARMY CORPS OF ENGINEERS
AFGHANISTAN DISTRICT
APO AE 09356

SITE ADAPT DESIGN
FP07 - GUARD HOUSE
STRUCTURAL SCHEDULES

SHEET IDENTIFICATION
S-601
SHEET 5 OF 13

$FILE$ $DATE$ $TIME$

f'c = 27.5MPa CONCRETE

BAR SIZE \ CENTER TO CENTER BAR SPACING	(—TOP BARS—) LESS THAN 4db	(—TOP BARS—) 4db OR MORE	(–OTHER BARS–) LESS THAN 4db	(–OTHER BARS–) 4db OR MORE	4db
#10	460	460	410	410	40
#13	660	610	510	480	50
#16	1020	760	790	580	60
#19	1450	910	1120	710	80
#22	1960	1090	1500	840	90
#25	2590	1450	1980	1120	100
#29	3280	1830	2510	1420	110
#32	4140	2340	3200	1780	130
#36	5080	2840	3910	2180	140

NOTES:

1. LAP SPLICES ABOVE ARE IN MILLIMETERS UNO.
2. YIELD STRENGTH OF REINFORCEMENT, fy, IS 400MPa (LAP SPLICE LENGTH IS IN MILLIMETERS).
3. CONCRETE IS NORMAL WEIGHT (2400Kg/m).
4. TOP BAR INDICATES HORIZONTAL REINFORCEMENT WHICH IS PLACED ABOVE 300mm OR MORE OF FRESH CONCRETE.
5. SEE COLUMN SCHEDULE FOR COLUMN AND SHEAR WALL VERTICAL LAP SPLICE.
6. STREIGHT DEVELOPMENT LENGTH OF AN UNLAPPED BAR IS EQUAL TO VALUE FROM TABLE DIVIDED BY 1.3.
7. CATEGORY FOR BARS SPACED LESS THAN 4d, OR ON CENTER CORRESPONDS TO CATEGORY 1 IN THE CRSI HANDBOOK WHEREAS FOR BARS SPACED 4d, OR MORE ON CENTER CORRESPOND TO CRSI CATEGORY 5.

STRUCTURAL DESIGN CRITERIA:

ALL DESIGNS SHALL CONFORM TO THE PROVISIONS OF THE IBS 2006 AND UFC 4-010-01 AS APPLICABLE

2.0 FOUNDATION DESIGN CRITERIA (TO BE CONFIRMED BY THE CONTRACTOR)

THE GEOTECHNICAL ANALYSIS FOR THIS PROJECT IS THE RESPONSIBILITY OF THE CONTRACTOR AWARDED THE WORK . DESIGN VALUES USED IN THE STRUCTURAL ANALYSIS ON THE BUILDINGS HERIEN INDICATED HAVE BEEN ASSUMED AND SHALL BE CONFIRMED AND VERIFIED AS PART OF THE GEOTECHNICAL INVESTIGATION. VLAUES WHICH DO NOT MEET THE REQUIREMENTS INDICATED BELOW SHALL BE IMMEDIATELY BROUGHT TO THE ATTENTION OF THE ENGINEER-OF-RECORD FOR CONSIDERATION AND DETERMINATION ON THE NEXT APPROPRIATE COURSE OF ACTION.

2.1 SOIL DESIGNN PARAMETERS

NET ALLOWABLE SOIL BEARING CAPACITY	96.0 Kpa
UNIT WEIGHT OF SOIL (moist)	1800 Kg/m³
COEFF ACTIVE EARTH PRESSURE (Kpa)	0.30
COEFF PASSIVE EARTH PRESSURE (Kpp)	3.33
COEFF AT-REST EARTH PRESSURE (Kpr)	.55
COEFF OF SOIL FRICTION	.35
SUBGRADE MODULUS	4120 g/m³
MINIMUM BEARING DEPTH BELOW GRADE	800mm
SEISMIC SITE CLASS (based on in-situ soil)	0

STEEL MATERIALS SCHEDULE

STRUCTURAL ELEMENT	FY YIELD STRENGTH (MPa)	REMARKS
BEAMS & GIRDERS	250	ASTM A36M ASTM A6M
COLUMNS	240	ASTM A53-95 GRADE B ASTM A6M
MISC BRACING	250	ASTM A572M ASTM A6M
CONNECTIONS, PLATES, & ALL OTHERS	250	ASTM A36M ASTM A6M
ANCHOR BOLTS	-	ASTM A36M or A307M ASTM A6M
PIPES	240	ASTM A53-95 GRADE B ASTM A6M
TUBING	345	ASTM A500-93 GRADE C ASTM A6M
HIGH STRENGTH BOLTS	-	ASTM A325M-N
WELDING ELECTRODES	-	AWS D1.1-90 E70xx

CONCRETE COVER SCHEDULE

MINIMUM CONCRETE COVER PROTECTION FOR REINFORCEMENT BARS SHALL BE AS FOLLOWS: (SEE ACI 318-89M, SECTION 7.7 FOR CONDITIONS NOT NOTED). DIMENSIONS FOR BAR PLACEMENT GIVEN IN SECTIONS AND DETAILS SHALL SUPERCEDE MINIMUM COVER REQUIREMENTS GIVEN HERE. DIMENSIONS ARE IN mm.

FOOTINGS (EARTH FORMED)		70
COLUMNS / PIERS		40
GRADE BEAMS OR SLAB TURNED DOWN EDGES:		
TOP		40
BOTTOM (EARTH FORMED)		70
SIDES (EARTH FORMED)		70
SIDES (BOARD FORMED)	#16 BAR & SMALLER	40
	#19 THRU #36 BAR	50
		40
SLABS-ON-GRADE (NO EXPOSURE TO WEATHER) FROM TOP		20
SLABS-ON-GRADE (EXPOSURE TO WEATHER) FROM TOP		40
UTILITY TUNNEL WALLS, RETAINING WALLS AND SHEAR WALLS, (NO SURFACES SHALL BE EARTH FORMED) EARTH SIDE AND FRONT SIDE (EXPOSED TO WEATHER):		
#16 BAR AND SMALLER		40
#19 THRU #36 BAR		50

PROVIDE STANDARD BAR CHAIRS AND SPACERS AS REQUIRED TO MAINTAIN CONCRETE PROTECTION SPECIFIED.

CONCRETE MATERIALS SCHEDULE

STRUCTURAL ELEMENT	f'c CONCRETE COMPRESSIVE STRENGTH @ 28 DAYS (MPa)
SLAB-ON-GRADE/TURN-DOWN SLABS	27.5
ROOF SLABS	27.5
ALL FOOTINGS (U.N.O.)	20
MISC. CURBS, WALLS AND PADS UNO	27.5

NOTES:
1. ALL CONCRETE SHALL BE NORMAL WEIGHT CONCRETE. (2400 Kg/m UNO) 3

STANDARD HOOKS IN TENSION PER (ACI 318-89)

HOOK DEVELOPMENT LENGTH Ldh (mm)

BAR SIZE	f'c 20 MPa	f'c 27.5 MPa
#10	230	180
#13	280	250
#16	360	300
#19	430	380
#22	480	430
#25	560	480
#29	640	560
#32	710	610
#36	790	690

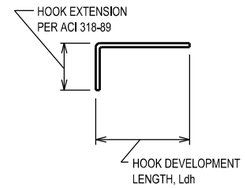

NOTES:
1. CONCRETE IS NORMAL WEIGHT CONCRETE.
2. BAR YIELD STRENGTH, fy = 400 MPa
3. SIDE COVER REQUIREMENTS OF ACI SECT. 12.5.3.2 ARE ASSUMED TO NOT BE MET.
4. TIE OR STIRRUP REQUIREMENTS OF ACI SECT. 12.5.3.2 ARE ASSUMED TO NOT BE MET.
5. REDUCTION FOR EXCESS REINFORCEMENT IS NOT TAKEN.
6. HOOK DEVELOPMENT LENGTH IS VALID FOR 180^ HOOKS ALSO.
7. FOR 35 MPa CONCRETE, USE VALUES FOR 30 MPa

US Army Corps of Engineers
AFGHANISTAN ENGINEER DISTRICT

MARK	DESCRIPTION	DATE	APPR.

DESIGNED BY: | DATE:
DWN BY: | CKD BY: | SOLICITATION NO.:
SUBMITTED BY: | CONTRACT NO.:
PLOT SCALE: 1:1 | PLOT DATE: | FILE NUMBER:
FILE NAME: FP07-S-602.dgn
SIZE:

U.S. ARMY CORPS OF ENGINEERS
AFGHANISTAN DISTRICT
APO AE 09356

SITE ADAPT DESIGN
FP07 - GUARD HOUSE
STRUCTURAL MATERIAL SCHEDULES

SHEET IDENTIFICATION
S-602
SHEET 6 OF 13

$FILE$ $DATE$ $TIME$

ROOM FINISH SCHEDULE

ROOM NO.	ROOM NAME	FLOOR	BASE	WALLS		CEILING		REMARKS
		FINISH	FINISH	FINISH	COLOR	FINISH	COLOR	
100	GUARD HOUSE	TT	TT	PP	P1	PP	WHITE	1, 3, 4, 5
101	TOILET	TT	TT	CT/PP	CT/P1	PP	WHITE	1, 2, 4, 5
102	TOILET	TT	TT	CT/PP	CT/P1	PP	WHITE	1, 2, 4, 5

DOOR SCHEDULE

TAG	DOOR MAT'L	DOOR TYPE	DOOR WIDTH	DOOR HEIGHT	DOOR THICK	FRAME MAT'L	FRAME TYPE	FIRE LABEL	GLAZING	HRDWRE SET	NOTES
D-1	INSUL. HM	A	900	2150	45	HM	1	-	BULLET RESISTANT	1	1,2,3,4,5,6,7,8
D-2	PVC	B	700	2150	45	HM	1	-	-	2	2,3,4,5,6,7,9

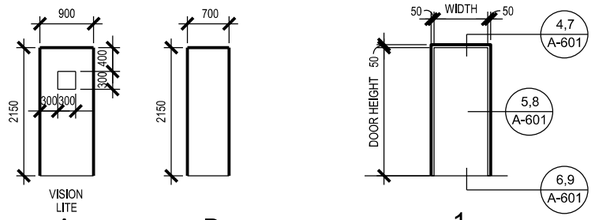

1 A-601 DOOR TYPES
SCALE = 1:50

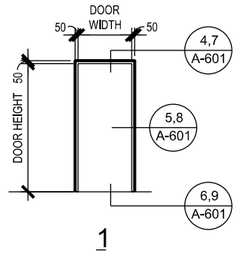

2 A-601 FRAME TYPE
SCALE = 1:50

FINISH SCHEDULE NOTES:

1. FINISH ABBREVIATIONS IN SCHEDULE ARE AS FOLLOWS: TT=TERRAZZO TILE, CT=CERAMIC TILE, PP=PAINTED PLASTER.
2. CERAMIC TILE SHALL EXTEND TO 2000mm ABOVE FINISHED FLOOR. WALL ABOVE WAINSCOT SHALL BE PAINTED WITH ONE COAT OF PRIMER AND TWO COATS OF OFF-WHITE SEMI-GLOSS PAINT.
3. PAINTED PLASTER WALLS SHALL HAVE ONE COAT OF PRIMER AND TWO COATS OF SEMI-GLOSS OFF-WHITE PAINT.
4. PAINTED PLASTER CEILINGS SHALL HAVE ONE COAT OF PRIMER AND TWO COATS OF FLAT WHITE PAINT.
5. CERAMIC TILE AND TERRAZZO TILE FINISH COLORS SHALL BE SELECTED BY THE COR FROM SAMPLES SUBMITTED BY THE CONTRACTOR.
6. EXTERIOR STUCCO COLOR SHALL BE SELECTED BY THE COR FROM SAMPLES SUBMITTED BY THE CONTRACTOR.

DOOR TYPE NOTES:

1. EXTERIOR DOOR, INCLUDING GLAZING, SHALL MEET THE REQUIREMENTS OF UL752, LEVEL 5 RESISTANCE FOR PROTECTION AGAINST AK-47 FIRE.
2. DOORS AND FRAME COLORS SHALL MATCH ADJACENT WALL COLORS AS SELECTED BY THE CONTRACTING OFFICER.
3. HARDWARE SHALL BE HEAVY DUTY, COMMERCIAL GRADE, STAINLESS STEEL WITH A MATTE FINISH. THERE SHALL BE THREE HINGES AT EACH DOOR, AT LEAST 200/16/5 MM, WITH BALL BEARINGS, SECURED BY THREADED PINS.
4. FRAMES SHALL BE MOUNTED AND ADJUSTED IN ACCORDANCE WITH MANUFACTURER'S INSTRUCTIONS. FRAMES SHALL BE FASTENED WITH MINIMUM OF THREE FASTENING POINTS PER SIDE AT REGULAR INTERVALS.
5. ALL DOOR FRAMES SHALL BE FITTED WITH DOOR SILENCERS.
6. DIMENSIONS SHOWN ON DOOR SCHEDULE ARE BASED UPON MODULAR MASONRY (OR ROUGH OPENING), HEIGHT OF 2200mm FOR STANDARD PERSONNEL DOORS. CONTRACTOR SHALL COORDINATE WITH DOOR SUPPLIER TO ENSURE THAT DIMENSIONS OF DOORS AND FRAMES PROVIDED ARE COMPATIBLE WITH DOOR OPENING DIMENSIONS.
7. ALL DOOR LOCKS SHALL BE MORTISED.
8. LOCK FUNCTION F04 - OFFICE DOOR LOCK - LATCH BOLT OPERATED BY LEVER FROM EITHER SIDE EXCEPT WHEN OUTSIDE LEVER IS MADE INOPERATIVE BY A STOP OR MECHANICAL MEANS OTHER THAN A KEY. WHEN OUTSIDE LEVER IS LOCKED, LATCH BOLT MAY BE RETRACTED BY KEY FROM OUTSIDE OR BY ROTATING INSIDE LEVER.
9. LOCK FUNCTION F02 - PRIVACY LOCK - LATCH BOLT OPERATED BY LEVER EITHER SIDE. DEADBOLT OPERATED BY TURN FROM INSIDE AND BY EMERGENCY KEY FROM OUTSIDE

HARDWARE SETS:

HW-1
1-1/2 PR HINGES
1 EA LOCKSET F04, OFFICE DOOR LOCK, W/LEVERS, GRADE 1
1 EA THRESHOLD, J32130
1 SET WEATHERSEALS
1 SET SILENCERS

HW-2
1-1/2 PR HINGES
1 EA LOCKSET F02, PRIVACY LOCK W/LEVERS, GRADE 1
1 SET SILENCERS

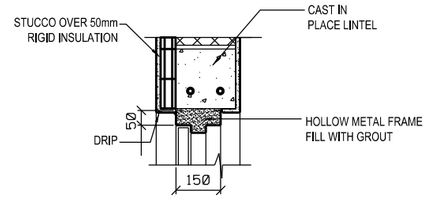

4 A-601 EXTERIOR DOOR HEAD
SCALE = 1:10

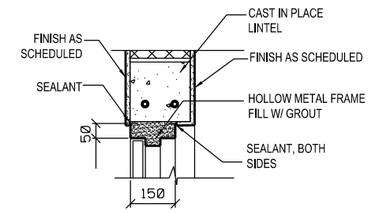

7 A-601 INTERIOR DOOR HEAD
SCALE = 1:10

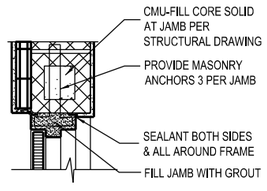

5 A-601 EXTERIOR DOOR JAMB
SCALE = 1:10

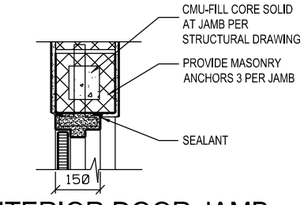

8 A-601 INTERIOR DOOR JAMB
SCALE = 1:10

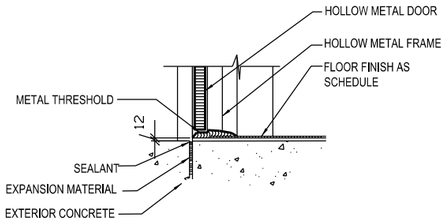

6 A-601 EXTERIOR DOOR SILL
SCALE = 1:10

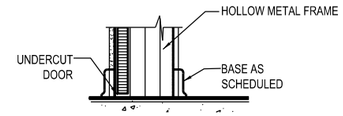

9 A-601 INTERIOR DOOR SILL
SCALE = 1:10

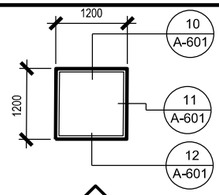

3 A-601 WINDOW TYPE
SCALE = 1:50

WINDOW TYPE NOTE:

1. WINDOW FRAME SHALL BE EXTRUDED ALUMINUM OR STEEL.
2. ALL WINDOWS AND GLAZING SHALL MEET THE REQUIREMENTS OF UL752, LEVEL 5 RESISTANCE FOR PROTECTION AGAINST AK-47 FIRE.

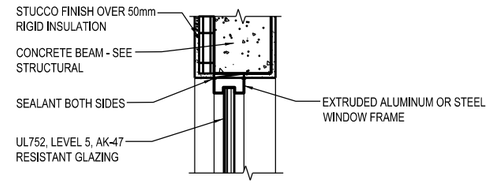

10 A-601 WINDOW HEAD
SCALE = 1:10

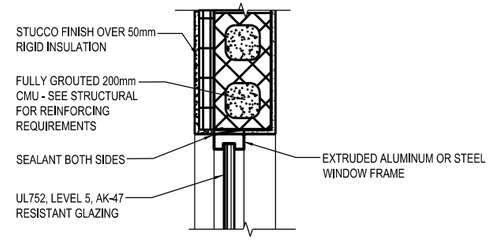

11 A-601 WINDOW JAMB
SCALE = 1:10

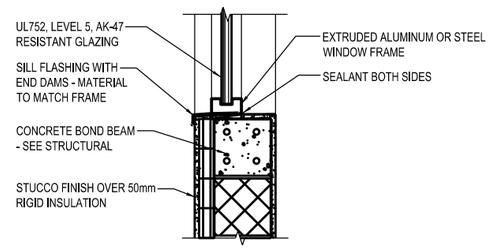

12 A-601 WINDOW SILL
SCALE = 1:10

GRAPHIC SCALES

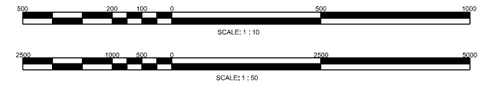

US Army Corps of Engineers
AFGHANISTAN ENGINEER DISTRICT

MARK	DESCRIPTION	DATE	APPR.

DESIGNED BY:
DWN BY:
SUBMITTED BY:
DATE:
OKD BY:
SOLICITATION NO.:
PLOT SCALE: 1:50
PLOT DATE:
CONTRACT NO.:
FILE NUMBER:
SIZE:
FILE NAME: FP07-A-6011.dgn

U.S. ARMY CORPS OF ENGINEERS
AFGHANISTAN DISTRICT
APO AE 09356

SITE ADAPT DESIGN
FP07 - GUARD HOUSE
DOOR & FINISH SCHEDULES AND DETAILS

SHEET IDENTIFICATION
A-601
SHEET 9 OF 13

$FILE$
$DATE$
$TIME$

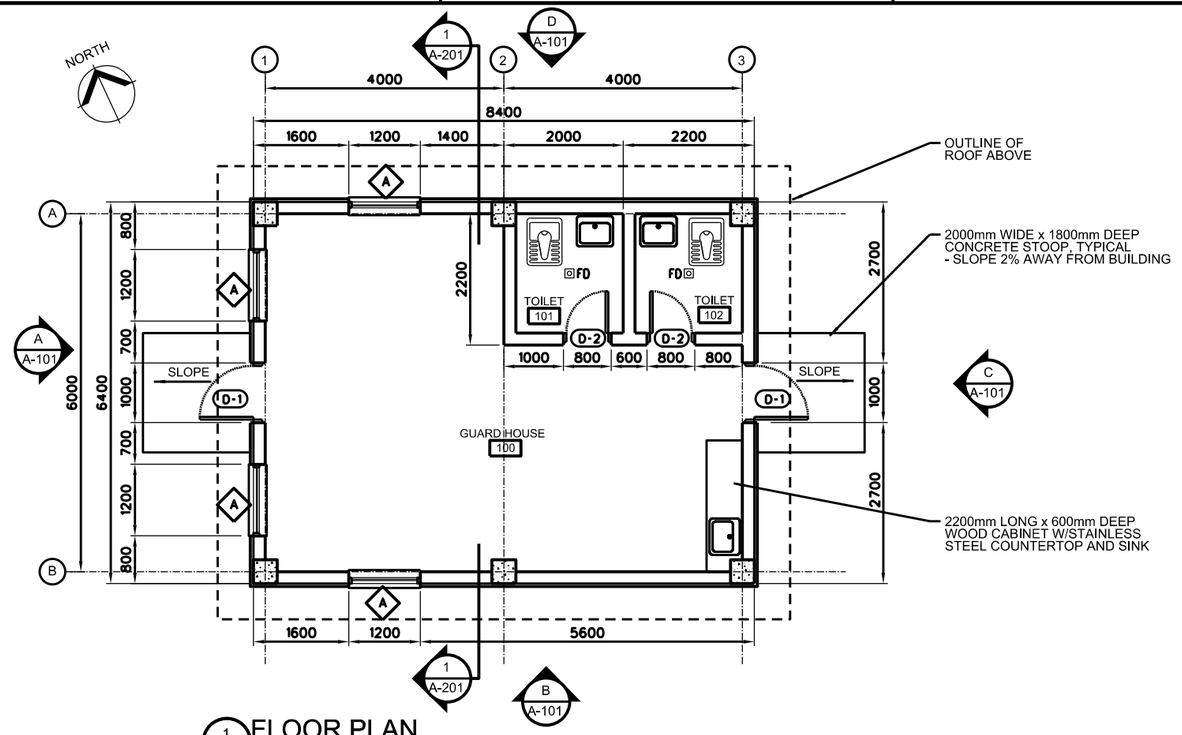

1 A-101 FLOOR PLAN
SCALE: 1:50

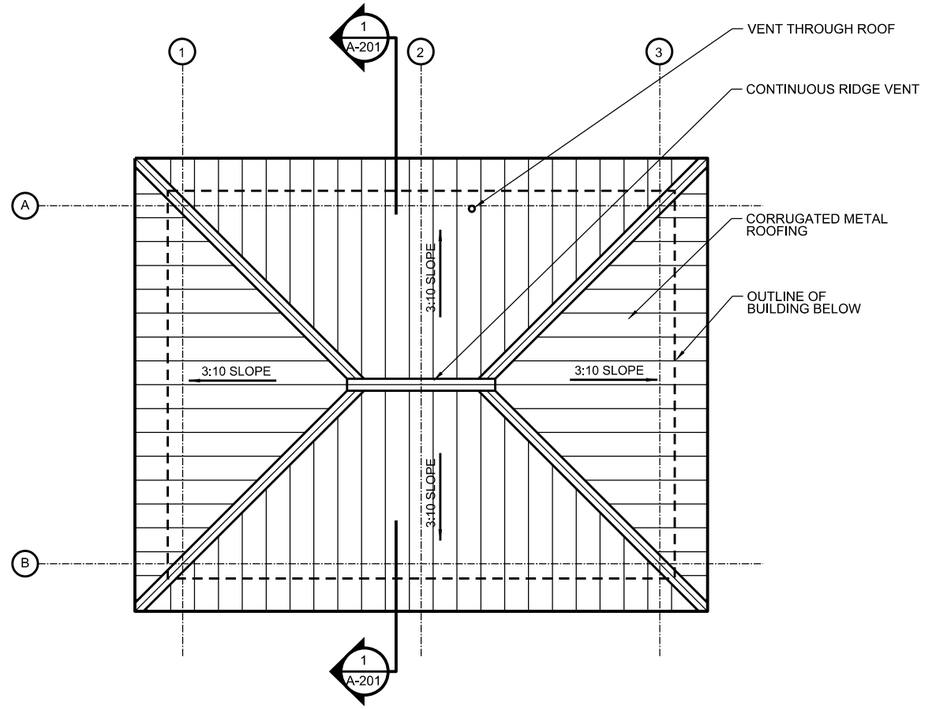

2 A-101 ROOF PLAN
SCALE: 1:50

LEGEND:

- D-- DOOR TYPE, SEE PLATE A-601
- FEB FIRE EXTINGUISHER AND WALL MOUNTED BRACKET
- A WINDOW TYPE, SEE PLATE A-601
- FD FLOOR DRAIN
- EXHAUST FAN

GENERAL NOTES:

1. WALL FINISHES SHALL BE AS INDICATED IN FINISH SCHEDULE ON PLATE A-601.
2. SURFACES TO BE PAINTED SHALL BE CLEAN AND FREE OF FOREIGN MATTER BEFORE APPLICATION OF PAINT. CLEANING SHALL BE SCHEDULED SO THAT DUST AND OTHER CONTAMINANTS WILL NOT FALL ON WET, NEWLY PAINTED SURFACES.
3. CONCRETE AND INTERIOR MASONRY SURFACES GROUTED SOLID SHALL BE ALLOWED TO DRY AT LEAST 30 DAYS BEFORE PAINTING.
4. PAINTS CONTAINING LEAD IN EXCESS OF 0.06 PERCENT BY WEIGHT OF THE TOTAL NONVOLATILE CONTENT SHALL NOT BE USED.
5. MERCURIAL FUNGICIDES SHALL NOT BE USED IN OIL-BASE PAINT.
6. REMOVE LOOSE DIRT AND CLEAN SURFACES BEFORE PAINTING. APPLY PAINT TO INTERIOR STRUCTURAL RIGID FRAMINGS AND CEILINGS AND TEST FOR ADHESION. PRIMER COAT FOR MASONRY. INITIAL FIRST COAT WITH AN ACRYLIC LATEX PAINT FOR EXTERIOR SURFACES AND A SECOND COAT WITH A WATER REPELLENT ACRYLIC LATEX PAINT.
7. DIMENSIONS ARE TO EDGE OF MASONRY OPENINGS.

GRAPHIC SCALE

1000

2500 500 0 2500 5000

SCALE: 1 : 50

US Army Corps of Engineers
AFGHANISTAN ENGINEER DISTRICT

MARK	DESCRIPTION	DATE	APPR.
MARK	DESCRIPTION	DATE	APPR.

DESIGNED BY:
DWN BY:
CHD BY:
SUBMITTED BY:
DATE:
SOLICITATION NO.:
CONTRACT NO.:
PLOT SCALE:
PLOT DATE:
FILE NUMBER:
FILE NAME: FP07-A-101s.dgn
USE:
SIZE:

U.S. ARMY CORPS OF ENGINEERS
AFGHANISTAN DISTRICT
APO AE 09356

SITE ADAPT DESIGN
FP07 - GUARD HOUSE
FLOOR PLAN, ROOF PLAN, AND REFLECTED CEILING PLAN

SHEET IDENTIFICATION
A-101
SHEET 7 OF 13

$FILE$
$DATE$ $TIME$

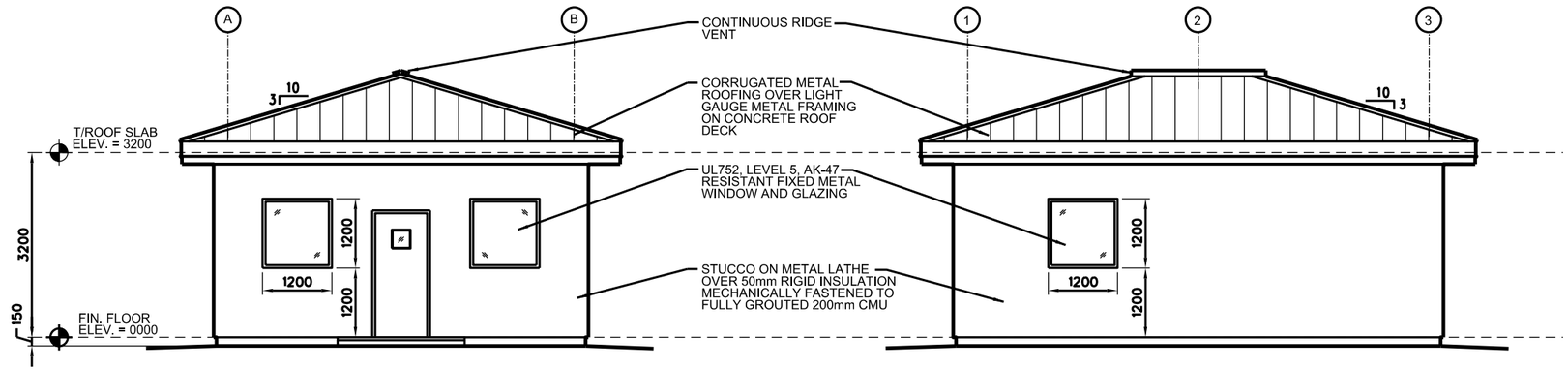

A A-201 ELEVATION
SCALE: 1:50

B A-201 ELEVATION
SCALE: 1:50

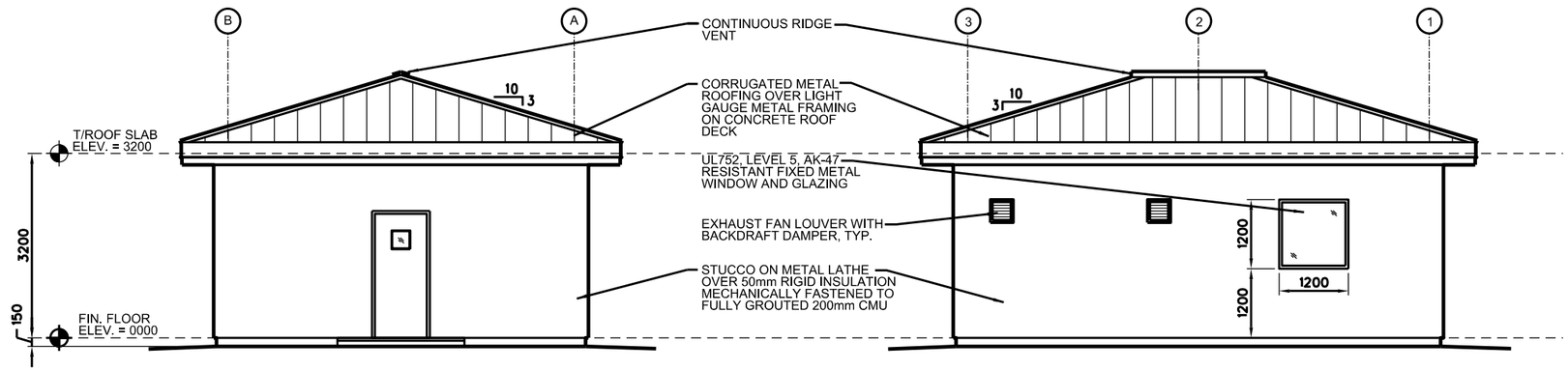

C A-201 ELEVATION
SCALE: 1:50

D A-201 ELEVATION
SCALE: 1:50

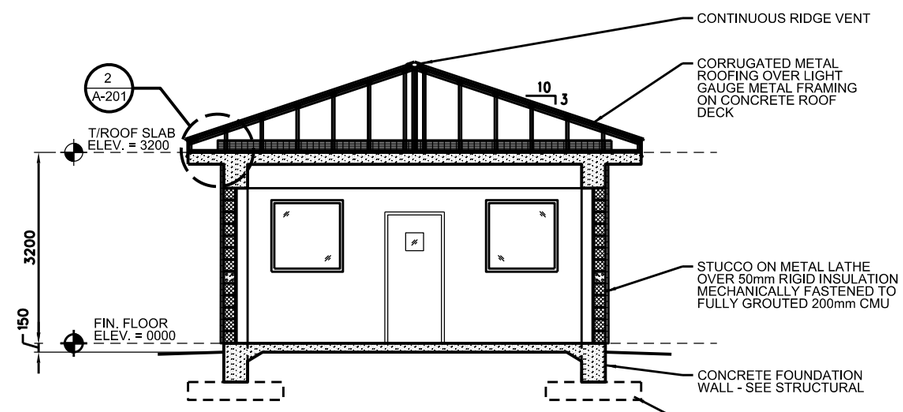

1 A-201 BUILDING SECTION
SCALE: 1:50

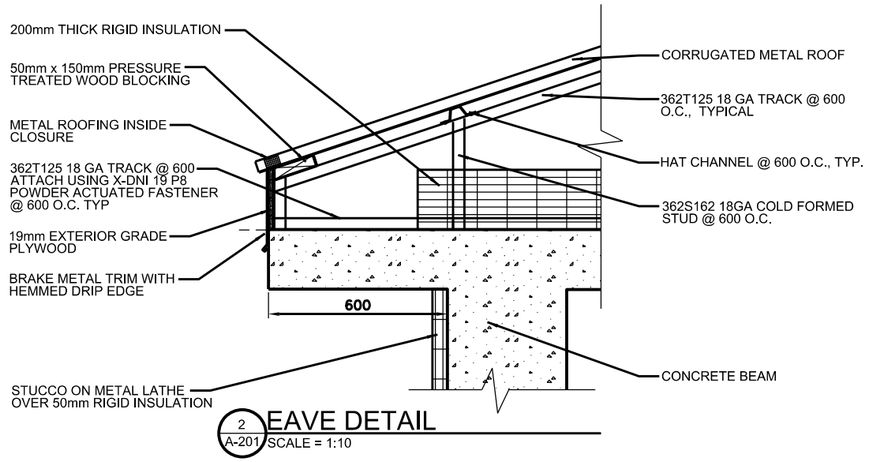

2 A-201 EAVE DETAIL
SCALE = 1:10

GENERAL NOTES:

1. WALL FINISHES SHALL BE AS INDICATED IN FINISH SCHEDULE ON PLATE A-601.
2. SURFACES TO BE PAINTED SHALL BE CLEAN AND FREE OF FOREIGN MATTER BEFORE APPLICATION OF PAINT. CLEANING SHALL BE SCHEDULED SO THAT DUST AND OTHER CONTAMINANTS WILL NOT FALL ON WET, NEWLY PAINTED, SURFACES.
3. CONCRETE AND INTERIOR MASONRY SURFACES GROUTED SOLID SHALL BE ALLOWED TO DRY AT LEAST 30 DAYS BEFORE PAINTING.
4. PAINTS CONTAINING LEAD IN EXCESS OF 0.06 PERCENT BY WEIGHT OF THE TOTAL NONVOLATILE CONTENT SHALL NOT BE USED.
5. MERCURIAL FUNGICIDES SHALL NOT BE USED IN OIL-BASE PAINT.
6. REMOVE LOOSE DIRT AND CLEAN SURFACES BEFORE PAINTING. APPLY PAINT TO INTERIOR STRUCTURAL RIGID FRAMINGS AND CEILINGS AND TEST FOR ADHESION. PRIMER COAT FOR MASONRY. INITIAL FIRST COAT WITH AN ACRYLIC LATEX PAINT FOR EXTERIOR SURFACES AND A SECOND COAT WITH A WATER REPELLENT ACRYLIC LATEX PAINT.
7. DIMENSIONS ARE TO EDGE OF MASONRY OPENINGS.

GRAPHIC SCALE
500 200 100 0 500 1000
SCALE: 1 : 10

GRAPHIC SCALE
2500 1000 500 0 2500 5000
SCALE: 1 : 50

US Army Corps of Engineers
AFGHANISTAN ENGINEER DISTRICT

MARK	DESCRIPTION	DATE	APPR.
MARK	DESCRIPTION	DATE	APPR.

DESIGNED BY: | DATE: | SOLICITATION NO.:
DWN BY: | CKD BY: | CONTRACT NO.:
SUBMITTED BY: | PLOT SCALE: 1:50 | PLOT DATE: | FILE NUMBER:
SIZE: | FILE NAME: FP07-A-201e.dgn

U.S. ARMY CORPS OF ENGINEERS
AFGHANISTAN DISTRICT
APO AE 09356

SITE ADAPT DESIGN
FP07 - GUARD HOUSE
ELEVATIONS, BUILDING SECTION, AND EAVE DETAIL

SHEET IDENTIFICATION
A-201
SHEET 8 OF 13

$FILELS $DATES $TIMES

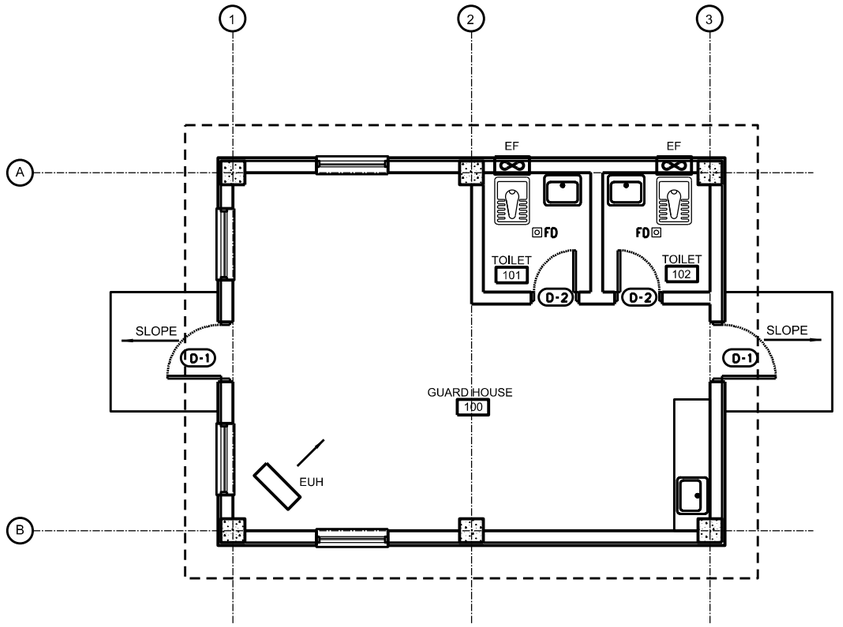

1 M-101 HVAC PLAN
SCALE: 1:50

LEGEND:

- D-* — DOOR TYPE, SEE PLATE A-601
- FEB — FIRE EXTINGUISHER AND WALL MOUNTED BRACKET
- A — WINDOW TYPE, SEE PLATE A-601
- FD — FLOOR DRAIN
- EF — EXHAUST FAN, PROPELLER TYPE WITH OPERATABLE LOUVER 85 CMH
- EUH — ELECTRIC UNIT HEATER 5kW, 220 VOLTS, 1 PHASE, 50 HERTZ

GRAPHIC SCALE

2500 500 0 2500 5000
SCALE: 1 : 50

US Army Corps of Engineers
AFGHANISTAN ENGINEER DISTRICT

MARK	DESCRIPTION	DATE	APPR.
MARK	DESCRIPTION	DATE	APPR.

DESIGNED BY: | DRAWN BY: | CKD BY: | SUBMITTED BY: | DATE: | SOLICITATION NO.: | CONTRACT NO.: | PLOT SCALE: 1:50 | PLOT DATE: | FILE NUMBER: | SIZE: | FILE NAME: FP07A-101c.dgn

U.S. ARMY CORPS OF ENGINEERS
AFGHANISTAN DISTRICT
APO AE 09356

SITE ADAPT DESIGN
FP07 - GUARD HOUSE
MECHANICAL PLAN

SHEET IDENTIFICATION
M-101
SHEET 10 OF 13

$FILE$
$DATE$ $TIME$

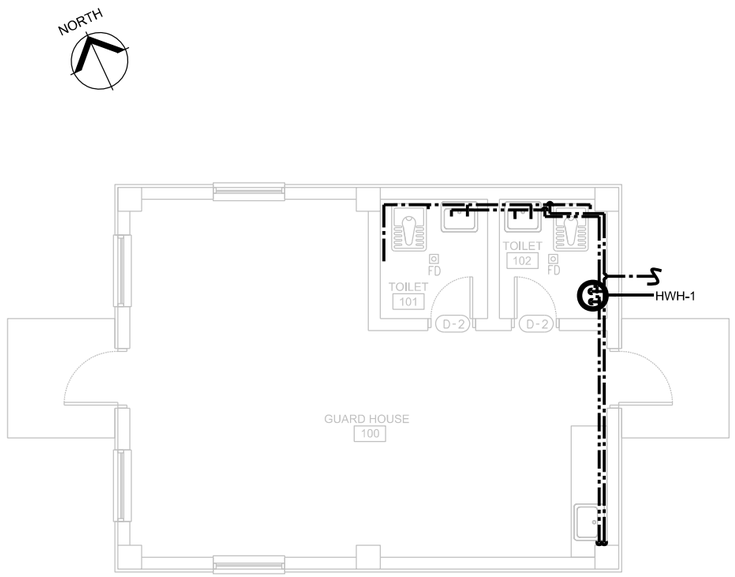

1 P-101 PLUMBING HOT & COLD PLAN
SCALE: 1:50

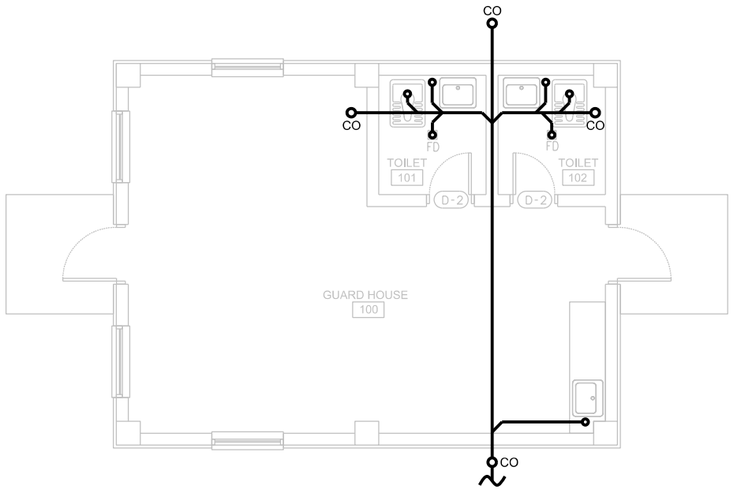

2 P-101 PLUMBING WASTE PLAN - ALTERNATE A
SCALE: 1:50

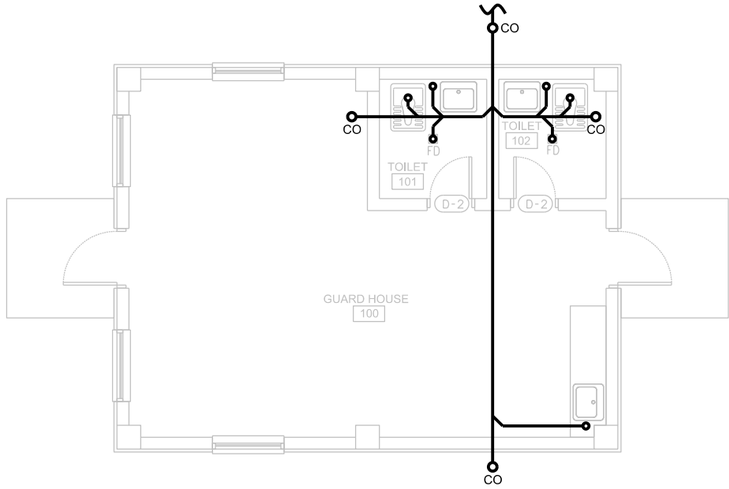

3 P-101 PLUMBING WASTE PLAN - ALTERNATE B
SCALE: 1:50

PLUMBING FIXTURE LIST SCHEDULE							
TYPE	ITEM	SOIL & WASTE	VENT	COLD WATER	HOT WATER	REMARKS	REMARKS 2
W-1	EASTERN STYLE WATER CLOSET	100mm	---	15mm	———	FLUSH TANK	----------
L-2	WALL HUNG LAVATORY	40mm	40mm	15mm	15mm	CAST IRON WITH BAKED ENAMEL FINISH	----------
FD	FLOOR DRAIN	50mm	---	---	---	SLOPE FLOOR TO DRAIN	----------
KS	KITCHEN SINK	40mm	---	15mm	15mm	STAINLESS STEEL	----------

ELECTRIC WATER HEATER SCHEDULE						
MARK	MANUF	LOCATION	STORAGE (Ltr)	TOTAL KW	VOLTS/ PHASE/ HERTZ	REMARKS
HWH-1	A.O. SMITH	TOILET 102	80	1.5	220/1/50	EXTEND DRAIN LINE FROM T&P VALVE TO FLOOR

LEGEND:

- WASTE
- COLD WATER
- HOT WATER

GRAPHIC SCALE

1000

2500 500 0 2500 5000

SCALE: 1 : 50

US Army Corps of Engineers
AFGHANISTAN ENGINEER DISTRICT

MARK	DESCRIPTION	DATE	APPR.
MARK	DESCRIPTION	DATE	APPR.

DESIGNED BY:
DWN BY:
CKD BY:
SUBMITTED BY:
DATE:
SOLICITATION NO.:
CONTRACT NO.:
FILE NUMBER:
PLOT SCALE: 1:50
PLOT DATE:
SIZE:
FILE NAME: FP07-A-101c.dgn

U.S. ARMY CORPS OF ENGINEERS
AFGHANISTAN DISTRICT
APO AE 09356

SITE ADAPT DESIGN
FP07 - GUARD HOUSE
FLOOR PLAN - PLUMBING

SHEET IDENTIFICATION
P-101
SHEET 11 OF 13

$FILE$
$DATE$
$TIME$

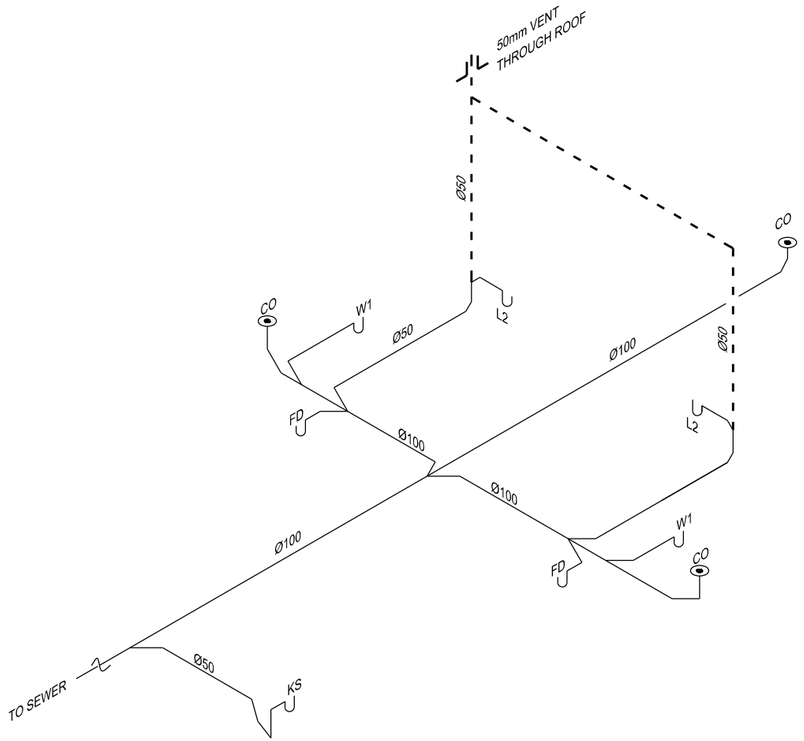

1 P-901 WATE & VENT ISOMTERIC - ALTERNATE A
SCALE: N.T.S.

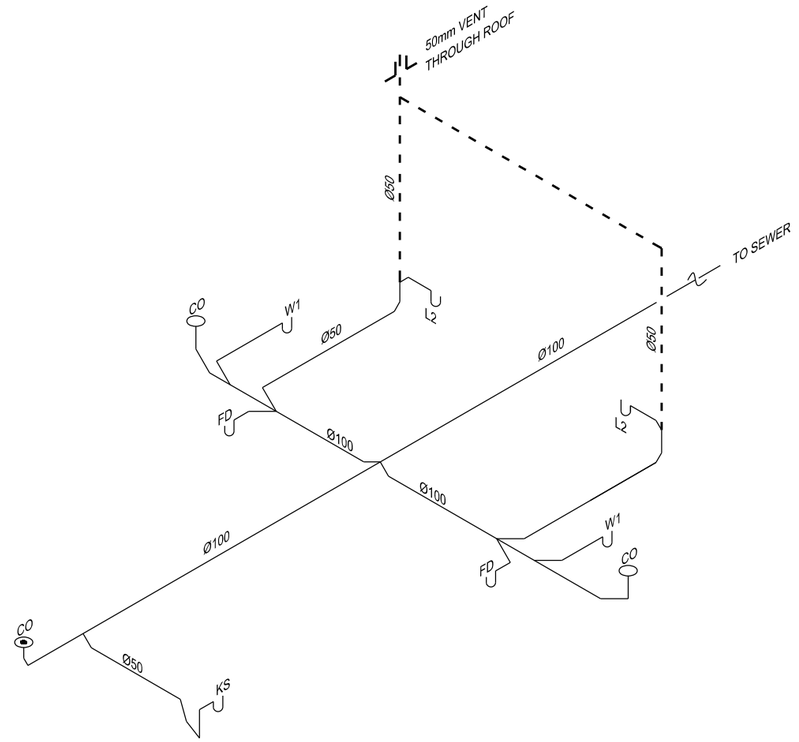

2 P-901 WASTE & VENT ISOMETRIC - ALTERNATE B
SCALE: N.T.S.

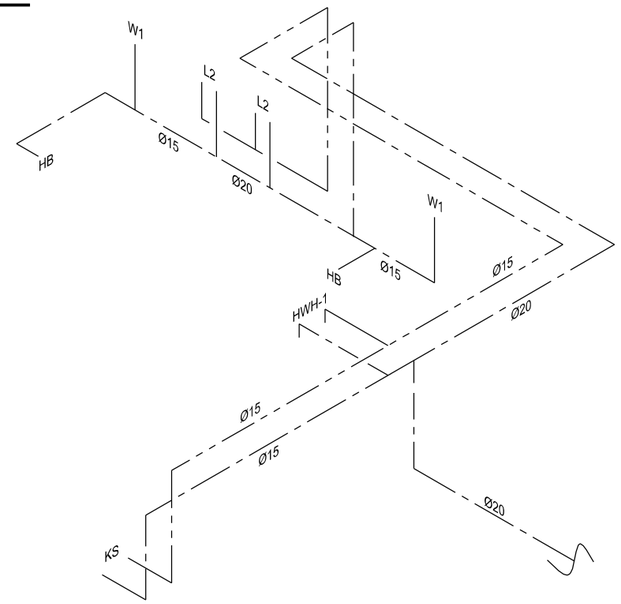

3 P-901 GUARD HOUSE HOT & COLD ISOMETRIC
SCALE: N.T.S.

LEGEND:

- WASTE
- VENT
- COLD WATER
- HOT WATER

US Army Corps of Engineers
AFGHANISTAN ENGINEER DISTRICT

MARK	DESCRIPTION	DATE	APPR.

U.S. ARMY CORPS OF ENGINEERS
AFGHANISTAN DISTRICT
APO AE 09356

DESIGNED BY: JAE
DWN BY: JSP
CKD BY: JAE
SUBMITTED BY: MRH
DATE:
SOLICITATION NO.:
CONTRACT NO.:
FILE NUMBER:
PLOT SCALE: 1:96
PLOT DATE:
SIZE: ANSI D
FILE NAME: FP07_P-901.dgn

SITE ADAPT DESIGN
FP07 - GUARD HOUSE
PLUMBING ISOMETRICS

SHEET IDENTIFICATION
P-901
SHEET 12 OF 13

$FILE$ $TIME$
$DATE$

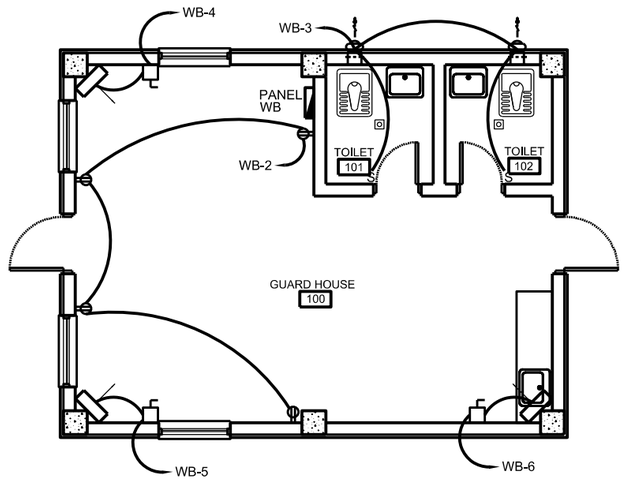

1 E-101 POWER PLAN
SCALE: N.T.S.

PANEL: WB | **VOLTS**: 220V | **PHASE/WIRE:** 1/3 | **LOCATION:**

MAIN BUS: 60AMP | **MAIN CB**: 60AMP | **NEUTRAL:** 100% | **FAULT DUTY**: 22 kAIC MIN.

LOAD INFORMATION			VOLTAMPS	BREAKER RATING /POLES		
LOAD	NOTE	TYPE		CKT	P	CB
Lighting		L	742	1	1	20
Receptacles		R	720	2	1	20
Exhaust Fans		M2	1000	3	1	20
Unit Heater #1		RH	1000	4	1	20
Unit Heater #2		RH	1000	5	1	20
Unit Heater #3		RH	1000	6	1	20
Spare		S	1000	7	1	20
Spare		S	1000	8	1	20
Spare		S	1000	9	1	20
Space				10	1	20
Space				11	1	20
Space				12	1	20
Space				13	1	20
Space				14	1	20
Space				15	1	20
Space				16	1	20
MOUNTING: SURFACE			8,462			
ENCLOSURE: NEMA 1			**CONNECTED PHASE (VA):**			8,462
			CONNECTED CURRENT (A):			38.46

NOTES:

TYPE	VA	DF	VAxDF
L	742	1.00	742
M1	-	0.60	-
M2	1,000	0.30	300
O	-	0.80	-
R	720	1.00	720
R	-	0.50	-
RH	3,000	0.90	2,700
IF	-	0.90	-
AC	-	0.80	-
RC	-	0.70	-
S	3,000	0.50	1,500
CND	8,462	**EMD**	5,962
EMD (Amps)			27.10

LOAD TYPES:
L - LIGHTING
LM - LARGEST MOTOR
M - MOTOR LOAD
O - MISC OR OTHER TYPE LOADS
R - RECEPTACLE (First 10,000 VA per NEC)
R - RECEPTACLE (over 10,000 VA per NEC)
S - SPARE

form:panelsch.xls: SRHFORM dated: 28 February 2005

2 E-101 PANEL WB SCHEDULE
SCALE: N.T.S.

GENERAL NOTES:

1. GROUND FAULT CIRCUIT INTERRUPTER DUPLEX RECEPTACLES AT CABINET SHALL BE PLACED ON TWO SEPARATE AND DEDICATED CIRCUITS.

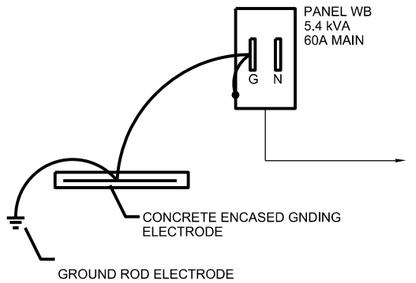

FEED BACK TO THE MAIN DISTRIBUTION POINT FOR THE COMPOUND. AS PART OF THE SITE ADAPT PACKAGE, INCOMING FEED SHALL BE SIZED TO CARRY FULL LOAD CAPACITY OF THE PANEL BUS WHILE MAINTAINING ACCEPTABLE VOLTAGE DROP LEVEL. EQUIPMENT GROUNDING CONDUCTOR SHALL BE INSTALLED FROM PANEL TO MDP PER NEC 250.32(B). THE MINIMUM FEED SIZE SHALL BE (2) 25mm2 AND (1) 6mm2 GND IN 103mmC.

3 E-101 RISER DIAGRAM
SCALE: N.T.S.

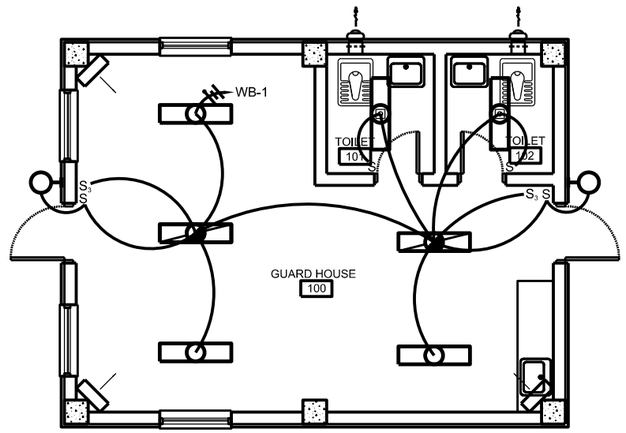

4 E-101 LIGHTING PLAN
SCALE: N.T.S.

LEGEND:

FIXTURE MARK "A"
WRAP AROUND, SURFACE MOUNTED, FLUORESCENT FIXTURE WITH PRISMATIC ACRYLIC LENS AND ELECTRONIC BALLAST
- (2) 40W 3500K BULBS
- 220V - 1Ø 50HZ

FIXTURE MARK "A*"
WRAP AROUND, SURFACE MOUNTED, FLUORESCENT FIXTURE WITH PRISMATIC ACRYLIC LENS AND ELECTRONIC BALLAST WITH EMERGENCY BALLAST
- (2) 40W 3500K BULBS
- 220V - 1Ø 50HZ

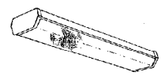

FIXTURE MARK "B"
INCANDESCENT, WALL MOUNTED, ONE PIECE W/APPROVED LENS STABILIZED HIGH IMPACT POLYCARBONATE.
- (1) A19 - 100W INCANDESCENT
- 220V - 1Ø 50HZ

EXHAUST FAN

220V DUPLEX ELECTRICAL RECEPTACLE

32A, 220V, LOCKABLE DISCONNECT SWITCH

UNIT HEATER

S_3 220V, 20A, 1P GENERAL PURPOSE SWITCH (3 WAY)

GRAPHIC SCALE
SCALE 1:50

US Army Corps of Engineers
AFGHANISTAN ENGINEER DISTRICT

MARK	DESCRIPTION	DATE	APPR.
MARK	DESCRIPTION	DATE	APPR.

DESIGNED BY: | DATE: | SOLICITATION NO.:
DWN BY: | CKD BY: | CONTRACT NO.:
SUBMITTED BY: | PLOT SCALE: 1:1 | PLOT DATE: | FILE NUMBER:
SIZE: | FILE NAME: FP07-E-101e.dgn

U.S. ARMY CORPS OF ENGINEERS
AFGHANISTAN DISTRICT
APO AE 09356

SITE ADAPT DESIGN
FP07 - GUARD HOUSE
ELECTRICAL PLANS

SHEET IDENTIFICATION
E-101
SHEET 13 OF 13

$FILE$ $DATE$ $TIME$

AFGHAN NATIONAL POLICE

STANDARD BUILDING DESIGNS

WELL HOUSE

SHEET INDEX

G1 COVER SHEET

S1 GENERAL NOTES
S2 DESIGN CRITERIA & SCHEDULES
S3 FOUNDATION & ROOF FRAMING PLANS
S4 SECTIONS AND DETAILS
S5 TYPICAL DETAILS

A1 FLOOR AND ROOF PLANS AND DETAILS
A2 EXTERIOR ELEVATIONS
A3 DOOR & WINDOW & FINISH TYPES & DETAILS

P1 PLUMBING SCHEMATIC AND DETAILS

M1 HVAC PLAN

E0 ELECTRICAL SYMBOLS AND ABBREVIATIONS
E1 LIGHTING AND POWER PLAN
E2 DETAILS
E3 LIGHT FIXTURE SCHEDULE
E4 PANEL SCHEDULES AND RISER DIAGRAM

US Army Corps of Engineers
Afghanistan Engineer District

SYMBOL	DESCRIPTION	DATE	APP'D

DESIGNED BY: JDS | DWN BY: JDS | CHK BY: JDS | DATE: 09-30-09 | SUBMITTED BY: BAKER | FILE NO.: ANPSDG-001XXX

Michael Baker Jr., Inc
A unit of Michael Baker Corporation
Airside Business Park
100 Airside Drive
Moon Township, PA 15108
www.mbakercorp.com

AFGHAN NATIONAL POLICE
STANDARD DESIGN
WELL HOUSE

COVER SHEET

SHEET REFERENCE NUMBER:
G1

100% SUBMISSION

STRUCTURAL ABBREVIATIONS:

ACI	AMERICAN CONCRETE INSTITUTE
AISC	AMERICAN INSTITUTE OF STEEL CONSTRUCTION
ALT	ALTERNATE
ASTM	AMERICAN SOCIETY FOR TESTING AND MATERIALS
AWS	AMERICAN WELDING SOCIETY
ARCH	ARCHITECTURAL
B	BOTTOM
BLDG	BUILDING
BOTT	BOTTOM
℄	CENTER LINE
CFMF	COLD FORM METAL FRAME
CFS	COLD FORMED STEEL
CIP	CAST IN PLACE
CIPL	CAST-IN-PLACE LINTEL
CJ	CONTROL JOINT
CLR	CLEAR
CMU	CONCRETE MASONRY UNIT
COEFF	COEFFICIENT
COL	COLUMN
CONC	CONCRETE
CONT	CONTINUOUS
COORD	COORDINATE
CSJ	CONSTRUCTION JOINT
CTJ	CONTROL JOINT
DIA	DIAMETER
DIAG	DIAGONAL
DIM	DIMENSION
DWG	DRAWING
DWL	DOWEL
EA	EACH
ELEC	ELECTRICAL
ELEV	ELEVATION
EMBED	EMBEDMENT
EQUIV	EQUIVALENT
ETC	ET CETERA
EW	EACH WAY
EXT	EXTERIOR
FTG	FOOTING
GA	GAUGE
HORIZ	HORIZONTAL
HRS	HOURS
IBC	INTERNATIONAL BUILDING CODE
INT	INTERIOR
Kg	KILOGRAM
KIP	KIPS (1 KIP = 1,000 POUNDS)
kN	KILONEWTON
kPa	KILOPASCAL
L#	ANGLE (# INDICATES SIZE)
LLV	LONG LEG VERTICAL
M	METER
MAX	MAXIMUM
MBM	METAL BUILDING MANUFACTURER
MECH	MECHANICAL
MFG	MANUFACTURER
MID	MIDDLE
MIN	MINIMUM
MISC	MISCELLANEOUS
MM	MILLIMETER
MPa	MEGAPASCAL
MTL	METAL
MWFRS	MAIN WIND FORCE RESISTING SYSTEM
N	NEWTON
N	NORTH
N/A	NOT APPLICABLE
#	NUMBER SYMBOL FOR REBAR SIZE
NTS	NOT TO SCALE
OC	ON CENTER
OPNG	OPENING
PL or PL	PLATE
PRE-ENG	PRE-ENGINEERED
REINF	REINFORCED
REQ'D	REQUIRED
SIM	SIMILAR
SPECS	SPECIFICATIONS
STD	STANDARD
STRUCT	STRUCTURAL
SW	SHEAR WALL
T	TOP
T/	TOP OF
T/ELEV	TOP ELEVATION
T&B	TOP AND BOTTOM
THK	THICK
TM	TRADE MARK
TYP	TYPICAL
UON	UNLESS OTHERWISE NOTED
VERT	VERTICAL
W	WIDTH
W/	WITH

GENERAL NOTES

1.0 THIS PROJECT HAS BEEN DESIGNED FOR THE WEIGHTS AND MATERIALS INDICATED ON THE SHEETS AND FOR THE LIVE LOADS INDICATED IN THE DESIGN DATA. IT IS THE CONTRACTOR'S RESPONSIBILITY TO DETERMINE ALLOWABLE CONSTRUCTION LOADS AND TO PROVIDE PROPER DESIGN AND CONSTRUCTION OF FALSEWORK, FORMWORK, STAGING, BRACING, SHEETING AND SHORING, ETC.

1.1 COORDINATE THESE SHEETS WITH THE ARCHITECTURAL, MECHANICAL, ELECTRICAL, PLUMBING, AND CIVIL SHEETS. ALL DIMENSIONS SHOWN ON THE SHEETS ARE MILLIMETERS UNLESS NOTED OTHERWISE.

1.2 THE CONTRACTOR SHALL VERIFY AND COORDINATE ALL FLOOR AND ROOF OPENING SIZES AND LOCATIONS, EQUIPMENT PAD SIZES AND LOCATIONS, ANCHOR BOLT LAYOUTS, ETC WITH EQUIPMENT SELECTED. THE CONTRACTOR SHALL MAKE ANY REQUIRED MODIFICATIONS AT NO ADDITIONAL COST.

1.3 THE CONTRACTOR SHALL REFER TO THE ARCHITECTURAL, MECHANICAL, ELECTRICAL AND PLUMBING SHEETS FOR SLEEVES, CURBS, INSERTS OR OPENINGS, ETC. NOT HEREIN INDICATED.

1.4 SLAB OPENINGS SMALLER THAN 250mm DIA TO BE CORE DRILLED IN FIELD UON. SEE MECHANICAL, ELECTRICAL AND PLUMBING SHEETS FOR LOCATIONS OF THESE OPENINGS.

1.5 WORK NOT INCLUDED ON THE SHEETS BUT IMPLIED TO BE SIMILAR TO THAT SHOWN AT CORRESPONDING PLACES ELSEWHERE ON THE SHEETS SHALL BE REPEATED.

1.6 IN CASE OF CONFLICT BETWEEN THE NOTES, DETAILS AND SPECIFICATIONS THE MOST RIGID REQUIREMENTS SHALL GOVERN.

1.7 SEE ARCHITECTURAL SHEETS FOR LOCATIONS OF MASONRY AND DRYWALL NON-LOAD BEARING PARTITIONS. PROVIDE COMPRESSIBLE FIRESAFING AT TOP OF WALL AS REQUIRED BY ARCHITECTURAL SHEETS.

1.8 COORDINATE FINISHED FLOOR DATUM ELEVATION 0.0m WITH THE CIVIL SHEETS.

2.0 FOUNDATION NOTES

2.1 THE GEOTECHNICAL ANALYSIS FOR THIS PROJECT IS THE RESPONSIBILITY OF THE CONTRACTOR AWARDED THE WORK. DESIGN VALUES USED IN THE STRUCTURAL ANALYSIS OF THE BUILDINGS HEREIN INDICATED HAVE BEEN ASSUMED AND SHALL BE CONFIRMED AND VERIFIED AS PART OF THE GEOTECHNICAL INVESTIGATION. VALUES WHICH DO NOT MEET THE REQUIREMENTS INDICATED ON SHEET S2 SHALL BE IMMEDIATELY BROUGHT TO THE ATTENTION OF THE CONTRACTING OFFICER FOR CONSIDERATION AND DETERMINATION ON THE NEXT APPROPRIATE COURSE OF ACTION.

2.2 SEE THE SPECIFICATION FOR ADDITIONAL REQUIREMENTS TO THOSE OUTLINED IN THE GEOTECHNICAL INVESTIGATION FOR EXCAVATION AND PREPARATION OF THE FOUNDATION AND THE SLAB ON GRADE SUBGRADE INCLUDING COMPACTION PROCEDURES.

2.3 EXCAVATIONS FOR FOOTINGS SHALL HAVE THE SIDES AND BOTTOMS TEMPORARILY LINED WITH 0.25mm POLYETHYLENE IF PLACEMENT OF CONCRETE DOES NOT OCCUR WITHIN 24 HRS OF THE EXCAVATION OF THE FOOTING.

2.4 FOUNDATION CONDITIONS NOTED DURING CONSTRUCTION WHICH DIFFER FROM THOSE DESCRIBED IN THE GEOTECHNICAL REPORT SHALL BE REPORTED TO THE GENERAL CONTRACTOR BEFORE FURTHER CONSTRUCTION IS ATTEMPTED. SEE PROJECT SPECIFICATIONS.

2.5 NO FOOTINGS OR SLABS SHALL BE POURED INTO OR AGAINST SUBGRADE CONTAINING FREE WATER, FROST, ICE OR LOOSE MATERIAL. FROST DEPTH ASSUMED TO BE 800MM

2.6 ALL SLAB-ON-GRADE, TRENCH BOTTOMS AND OTHER ON-GRADE INTERIOR HORIZONTAL SURFACES SHALL BE PLACED OVER A 0.25mm VAPOR RETARDER OVER A 100mm #57 STONE WATER BARRIER PLACED ON SUBGRADE PROPERLY PREPARED IN ACCORDANCE WITH THE CONTRACT SPECIFICATIONS. (UON)

2.7 SEE PLUMBING, ELECTRICAL & CIVIL SHEETS FOR REQUIRED UNDERSLAB UTILITIES.

2.8 SEE ARCHITECTURAL SHEETS FOR ALL WATERPROOFING DETAILS AND MATERIALS.

2.9 IF UNDERMINING OF FOOTINGS OCCURS, FILL VOIDS WITH 15MPa CONCRETE. DO NOT ATTEMPT TO REPLACE AND RECOMPACT SOIL.

3.0 CONCRETE

3.1 CONCRETE SHALL HAVE THE UNIT WEIGHT AND THE MINIMUM COMPRESSIVE STRENGTHS (f'c) AT 28 DAYS AS SHOWN IN THE CONCRETE MATERIALS SCHEDULE ON THIS SHEET. SEE SPECIFICATIONS FOR ADDITIONAL INFORMATION. ENTRAIN AIR TO PRODUCE TOTAL AIR CONTENT ACCORDING TO THE SPECIFICATIONS FOR CONCRETE EXPOSED TO FREEZING TEMPERATURES (EXTERIOR FOOTINGS, SLAB TURNDOWNS, EXTERIOR SLABS AND SLABS-ON-GRADE, EXTERIOR RETAINING WALLS, AND EXTERIOR GRADE BEAMS.)

3.2 GROUT FOR BASE PLATES SHALL BE NON-SHRINKABLE GROUT AND SHALL HAVE A MINIMUM SPECIFIED COMPRESSIVE STRENGTH AT 28 DAYS OF 35MPa, UNLESS NOTED OTHERWISE.

3.3 NO CALCIUM CHLORIDE SHALL BE USED IN ANY CONCRETE.

3.4 MIXING, TRANSPORTING AND PLACING OF CONCRETE SHALL CONFORM TO ACI 301M-05.

3.5 ALL CONCRETE WORK SHALL CONFORM TO THE REQUIREMENTS OF THE AMERICAN CONCRETE INSTITUTE (ACI) 318M MANUAL (metric), "BUILDING CODE REQUIREMENTS FOR REINFORCED CONCRETE", AND REQUIREMENTS OUTLINED IN THE CONTRACT SPECIFICATIONS. WHEN THERE IS A CONFLICT BETWEEN ACI AND THE SPECIFICATIONS, THE MORE STRINGENT SHALL GOVERN.

3.6 CHAMFER ALL EXPOSED EXTERNAL CORNERS OF CONCRETE WITH 20mm x45 DEGREE CHAMFER UON.

3.7 CONCRETE REINFORCEMENT BARS SHALL CONFORM TO ASTM A615M, GRADE 420, REINFORCING BARS SHALL NOT BE TACK WELDED, WELDED, HEATED OR CUT, UNLESS INDICATED ON THE CONTRACT DOCUMENTS. ALL LAP SPLICES SHALL BE CLASS "B" UON.

3.8 HORIZONTAL FOOTING AND HORIZONTAL WALL REINFORCEMENT SHALL BE CONTINUOUS AND SHALL HAVE 90 DEGREE BENDS AND EXTENSIONS, OR CORNER BARS OF EQUIVALENT SIZE LAPPED WITH A CLASS B TENSION SPLICE AT CORNERS AND INTERSECTIONS. TOP BAR CRITERIA SHALL APPLY IF 300mm OR MORE OF FRESH CONCRETE IS PLACED BELOW BAR.

3.9 SLABS-ON-GRADE SHALL HAVE CONSTRUCTION JOINTS OR CRACK CONTROL JOINTS AS SHOWN ON THE SHEETS. CONSTRUCTION JOINTS CAN BE USED AT CONTROL JOINT LOCATIONS AT CONTRACTORS OPTION. SEE SLAB PLANS & JOINT DETAILS FOR ADDITIONAL INFORMATION. FOR AREAS NOT SHOWN ON THE SHEETS, THE MAXIMUM SPACING OF CONSTRUCTION/ CRACK CONTROL JOINTS SHALL BE 4800 mm.

3.10 SEE SPECIFICATIONS FOR ALL WATERPROOFING/DAMPPROOFING REQUIREMENT.

3.11 ALL CONCRETE REINFORCEMENT SHALL BE DETAILED, FABRICATED, LABELED, SUPPORTED, AND SPACED IN FORMS AND SECURED IN PLACE IN ACCORDANCE WITH THE PROCEDURES AND REQUIREMENTS OUTLINED IN THE LATEST EDITION OF THE "BUILDING CODE REQUIREMENTS FOR REINFORCED CONCRETE", ACI 318M, AND THE "MANUAL OF STANDARD PRACTICE FOR DETAILING REINFORCED CONCRETE STRUCTURES", ACI 315M, LATEST EDITION.

3.12 SHOP DRAWINGS SHOWING REINFORCING DETAILS, INCLUDING STEEL SIZES, SPACING AND PLACEMENT, SHALL BE SUBMITTED FOR REVIEW PRIOR TO FABRICATION.

3.13 ALL DOWELS SHALL MATCH SIZE AND NUMBER OF MAIN REINFORCING, UNLESS NOTED OTHERWISE ON THE SHEETS.

3.14 ADDITIONAL BARS SHALL BE PROVIDED AROUND ALL FLOOR AND WALL OPENINGS AS SHOWN ON THE SHEETS.

3.15 SEE ARCHITECTURAL SHEETS FOR TYPE AND LOCATION OF ALL FLOOR FINISHES.

3.16 THE CONTRACTOR SHALL COORDINATE ADDITIONAL WALL/SLAB OPENINGS NOT SHOWN ON STRUCTURAL SHEETS. SEE MECHANICAL, ELECTRICAL, PLUMBING AND CIVIL SHEETS.

3.17 THE SUB-CONTRACTOR SHALL VERIFY ALL OPENINGS, PAD SIZES, AND ANCHOR BOLTS WITH EQUIPMENT SELECTED.

3.18 FOR ALL WALLS & PIERS, PROVIDE DOWELS INTO FOOTING AT EACH VERT REINF BAR, UON DOWEL SIZE SHALL BE SAME AS VERT REINF.

3.19 ALL REINFORCING INDICATED TO BE WELDED SHALL BE IN ACCORDANCE WITH ASTM A706M. "LOW ALLOY STEEL DEFORMED BARS FOR CONCRETE REINFORCEMENT". ANY INSTALLATIONS USING MANUFACTURER'S EQUIPMENT SHALL BE PER MANUFACTURER'S RECOMMENDATIONS.

3.20 PROVIDE CONCRETE POUR STOPS OR FORMED AS REQUIRED FOR INSTALLATION OF ALL CONCRETE WORK.

3.21 PROVIDE ADDITIONAL (2)-#13 x 600mm REINFORCING BARS IN SLAB-ON GRADE AT ALL RE-ENTRANT CORNERS. PLACE BARS AT MID-DEPTH OF SLAB WITH A CLEARANCE OF 50mm FROM CORNER UON.

4.0 CONCRETE MASONRY

4.1 MASONRY CONSTRUCTION AND MATERIALS SHALL CONFORM TO ALL REQUIREMENTS OF THESE CONTRACT DOCUMENTS AND THE PROJECT SPECIFICATIONS.

4.2 THE SPECIFIED ULTIMATE COMPRESSIVE STRENGTH OF CONCRETE MASONRY (f'm) ON THE NET AREA IS A MINIMUM OF 10.4 MPa.

4.3 PROVIDE TWO #16 BARS CONTINUOUS IN ALL CMU AND CAST-IN-PLACE BOND BEAMS UON ON THE SHEETS. BOND BEAMS SHALL BE CONTINUOUS AND SPACED AT A MAXIMUM OF 1200mm OC VERTICALLY. PROVIDE BOND BEAM STARTER COURSE AT BOTTOM OR FIRST COURSE ON ALL MASONRY WALLS AND PARTITIONS. ALL BOND BEAMS SHALL BE A MINIMUM OF 200mm IN DEPTH WITH REINFORCING BEING CONTINUOUS AND HAVING STANDARD ACI 180° HOOKS AT EACH END. PROVIDE STANDARD BAR SPLICES AS SPECIFIED.

4.4 FOR WALL REINFORCING, SEE DETAIL 7 ON SHEET S5

4.5 CMU CELLS THAT REQUIRE VERTICAL REINFORCING BARS AS INDICATED ON THE CONTRACT DRAWINGS AND/OR SPECS SHALL HAVE REINF BARS PLACED IN CENTERS OF CMU CELLS AND CONTINUOUSLY GROUTED UON.

4.6 PROVIDE LADDER TYPE JOINT REINFORCEMENT AT (200mm EXTERIOR & 400mm INTERIOR) ON CENTER MAXIMUM UON MINIMUM ROD SIZE USED SHALL BE 9 GA. DEFORMED WIRE AND CONFORM TO ASTM A82M, UON.

4.7 PROVIDE CONTROL JOINTS AS INDICATED ON THE ARCHITECTURAL SHEETS.

4.8 GROUT FOR MASONRY SHALL BE NORMAL WEIGHT AND HAVE A MINIMUM COMPRESSIVE STRENGTH OF 25 MPa AT 28 DAYS. GROUT SHALL CONFORM TO ASTM C476M. GROUT LIFTS SHALL NOT EXCEED 1400mm.

4.9 USE MORTAR TYPE S CONFORMING TO ASTM C270M, SEE SPECIFICATIONS.

4.10 CONCRETE MASONRY UNITS SHALL BE NORMAL WEIGHT AND CONFORM TO ASTM C90M.

4.11 ALL CMU CELLS, OPEN CAVITIES, AND AIR SPACES SHALL BE GROUTED TO STOP FRAGMENTS FROM MORTAR BLAST

4.12 BOND BEAM REINFORCING SHALL BE DISCONTINUOUS AT CONTROL JOINTS (UON). MAXIMUM CONTROL JOINT SPACING SHALL BE AS INDICATED ON THE ARCHITECTURAL SHEETS.

4.13 CONTRACTOR SHALL COORDINATE LOCATION OF ALL OPENINGS SEE ARCH, MECH, ELEC, AND PLUMBING SHEETS. FOR SIZE AND LOCATION OF OPENINGS.

4.14 MASONRY WALLS SHALL NOT BE BACK FILLED PRIOR TO THE MORTAR AND GROUT ATTAINING THEIR RESPECTIVE MAXIMUM DESIGN STRENGTHS PER SPECIFICATIONS.

5.0 CFMRF - COLD FORM METAL ROOF FRAMING SYSTEM

5.1 CFMF SHALL BE DESIGNED BY CFMF MANUFACTURER'S ENGINEER FOR ALL LOADING PER CODE AND AS INDICATED ON THE SHEETS.

5.2 FOR WIND LOADS, SEE THE DESIGN CRITERIA ON SHEET S2.

5.3 SUBMIT VENDOR'S PUBLISHED LITERATURE, TEST DATA AND INSTALLATION INSTRUCTIONS FOR METAL STUD ASSEMBLY AND ACCESSORIES INCLUDING OTHER DATA AS MAY BE REQUIRED TO CERTIFY COMPLIANCE WITH PERFORMANCE REQUIREMENTS SPECIFIED HEREIN.

5.4 SHOP DRAWINGS AND DESIGN ANALYSIS SHALL BE STAMPED AND APPROVED BY A LICENSED PROFESSIONAL ENGINEER.

5.5 CONNECTIONS AND GAUGE SIZES ARE MINIMUM AND SHALL BE INCREASED AS NECESSARY TO PROVIDE A STRUCTURALLY ADEQUATE SYSTEM. KICKERS MAY BE ADDED TO REDUCE THE STUD HEIGHTS WHERE ACCEPTABLE AND COORDINATED WITH THE ARCHITECTURAL DRAWINGS.

5.6 CRMRF SHALL HAVE THE FOLLOWING MINIMUM PROPERTIES:

STUD/RAFTER/EAVE STRUT:
Fy = 344 MPa
GAUGE = 18
DEPTH = 152.3 mm
WIDTH = 34.8 mm
MOMENT OF INERTIA, Ix = $847x10^3$ mm^4
SECTION MODULUS, Sx = $11.2x10^3$ mm^3

TRACK:
Fy = 344 MPa
GAUGE = 16
DEPTH = 152.3 mm
WIDTH = 38 mm
MOMENT OF INERTIA, Ix = $1083x10^3$ mm^4
SECTION MODULUS, Sx = $13.8x10^3$ mm^3

PURLIN:
Fy = 393 MPa
GAUGE = 16
MOMENT OF INERTIA (TOP COMPRESSION), Ixt = $23.7x10^3$ mm^4
MOMENT OF INERTIA (BOTT COMPRESSION), Ixb = $22.7x10^3$ mm^4
SECTION MODULUS (TOP COMPRESSION), Sxt = $1.8x10^3$ mm^3
SECTION MODULUS (BOTT COMPRESSION), Sxb = $1.7x10^3$ mm^3

MINIMUM LAP SPLICES OF REINFORCING BARS IN TENSION (PER ACI 318M-05)

f'c = 28 MPa CONCRETE

BAR SIZE \ CENTER TO CENTER BAR SPACING	(---TOP BARS--) LESS THAN 4db	(---TOP BARS--) 4db OR MORE	(--OTHER BARS--) LESS THAN 4db	(--OTHER BARS--) 4db OR MORE	4db
#10	460	460	410	410	40
#13	660	610	510	480	50
#16	1020	760	790	580	60

NOTES:
1. LAP SPLICES ABOVE ARE IN MILLIMETERS UON.
2. YIELD STRENGTH OF REINFORCEMENT, fy, IS 420MPa (LAP SPLICE LENGTH IS IN MILLIMETERS).
3. CONCRETE IS NORMAL WEIGHT (2400Kg/m^3).
4. TOP BAR INDICATES HORIZONTAL REINFORCEMENT WHICH IS PLACED ABOVE 300mm OR MORE OF FRESH CONCRETE.
5. SEE COLUMN SCHEDULE FOR COLUMN AND SHEAR WALL VERTICAL LAP SPLICE.
6. STRAIGHT DEVELOPMENT LENGTH OF AN UNLAPPED BAR IS EQUAL TO VALUE FROM TABLE DIVIDED BY 1.3.
7. CATEGORY FOR BARS SPACED LESS THAN 4d, OR ON CENTER CORRESPONDS TO CATEGORY 1 IN THE CRSI HANDBOOK WHEREAS FOR BARS SPACED 4d, OR MORE ON CENTER CORRESPOND TO CRSI CATEGORY 5.

CONCRETE MATERIALS SCHEDULE

STRUCTURAL ELEMENT	f'c CONCRETE COMPRESSIVE STRENGTH @ 28 DAYS (MPa)
SLAB-ON-GRADE/TURN-DOWN SLABS	28
ROOF AND FLOOR SLABS	28
ALL FOOTINGS (UON)	28
MISC. CURBS, WALLS AND PADS UON	28
CAST-IN-PLACE LINTEL	28

NOTES:
1. ALL CONCRETE SHALL BE NORMAL WEIGHT CONCRETE. (2400 Kg/m^3 UON)
2. ALL CONCRETE SHALL HAVE A WATER-CEMENT RATIO OF 0.45.

MASONRY REINFORCING MINIMUM LAP SPLICES

BAR SIZE	BASIC LAP SPLICE Ld FOR CMU REINFORCING(mm)
#10	450
#13	600
#16	750

STANDARD HOOKS IN TENSION PER (ACI 318M-05)

HOOK DEVELOPMENT LENGTH Ldh (mm)	
BAR SIZE	f'c 28 MPa
#10	180
#13	250
#16	300
#19	380
#22	430
#25	480
#29	560
#32	610
#36	690

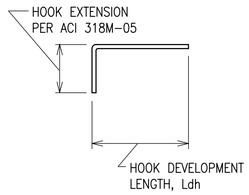

NOTES:
1. CONCRETE IS NORMAL WEIGHT CONCRETE.
2. BAR YIELD STRENGTH, fy = 420 MPa
3. SIDE COVER REQUIREMENTS OF ACI SECT. 12.5.3 ARE ASSUMED TO NOT BE MET.
4. TIE OR STIRRUP REQUIREMENTS OF ACI SECT. 12.5.3 ARE ASSUMED TO NOT BE MET.
5. REDUCTION FOR EXCESS REINFORCEMENT IS NOT TAKEN.
6. HOOK DEVELOPMENT LENGTH IS VALID FOR 180° HOOKS ALSO.

US Army Corps of Engineers
Afghanistan Engineer District

	APP	DATE	DESCRIPTION	SYMBOL

DESIGNED BY: GDH | DATE: 09-30-09
DWN BY: MDB | SUBMITTED BY: BAKER
CHK BY: CWW | FILE NO.: ANPSDS-001XXX

Michael Baker Jr., Inc
A unit of Michael Baker Corporation
Airside Business Park
100 Airside Drive
Moon Township, PA 15108
www.mbakercorp.com

AFGHAN NATIONAL POLICE
STANDARD DESIGN
WELL HOUSE

GENERAL NOTES

SHEET REFERENCE NUMBER:
S1

100% SUBMISSION

STRUCTURAL DESIGN CRITERIA

ALL DESIGNS SHALL CONFORM TO THE PROVISIONS OF THE IBC 2006 AS APPLICABLE

1.0 DESIGN LOADS

1.1 DEAD LOADS

1.1.1 ROOF DEAD LOADS – CONVENTIONAL FRAMING

	MAXIMUM GRAVITY LOAD	MINIMUM GRAVITY LOAD
LIGHT GAUGE FRAMING	0.20 KPa	0.15 KPa
METAL ROOFING	0.14 KPa	0.05 KPa
INSULATION	0.10 KPa	0.05 KPa
MISC	0.05 KPa	0.00 KPa
	0.49 KPa	0.25 KPa

1.1.2 ROOF DEAD LOADS – CONCRETE FRAMING

	MAXIMUM GRAVITY LOAD
CONC FLAT SLAB	4.80 KPa
MECH/ELEC/PLUMBING	0.15 KPa
MISC	0.05 KPa
	5.00 KPa

1.2 LIVE LOADS (PER IBC 2006)

1.2.1 ROOF LIVE LOADS: ALL BUILDINGS

GREATER OF 1.0 KPa MINIMUM OR SNOW LOAD

1.2.2 SLAB–ON–GRADE LIVE LOADS

ALL BUILDINGS 4.80 KPa

1.3 SNOW LOADS (PER IBC 2006)

1.3.1 DESIGN PARAMETERS

GROUND SNOW LOAD (per UFC 3–310–01)	PER LOCAL CONDITION
SNOW IMPORTANCE FACTOR	1.0 KPa
SNOW EXPOSURE FACTOR	1.0 KPa

1.4 SEISMIC LOADS (PER IBC 2006 & UFC 3–310–04)

1.4.1 SEISMIC PARAMETERS – LOAD BEARING MASONRY

SEISMIC OCCUPANCY CATEGORY	II
SEISMIC IMPORTANCE FACTOR (I)	1.0
SEISMIC SITE CLASS	D
Ss	1.280
S_1	0.510
Sds	0.853
Sd1	0.510
SEISMIC DESIGN CATEGORY	D
SEISMIC RESISTING SYSTEM	BEARING WALL SYSTEM SPECIAL REINF MASONRY SHEAR WALLS
RESPONSE MODIFICATION FACTOR (R)	5.0
RESPONSE CEFFICIENT (Cs)	0.17
SEISMIC ANALYTICAL PROCEDURE	EQUIV LATERAL FORCE
SEISMIC BASE SHEAR	49 kN

1.6 WIND LOADS (PER IBC 2006)

1.6.1 DESIGN PARAMETERS

BASIC WIND SPEED	137 Km/h
WIND IMPORTANCE FACTOR	1.0
WIND EXPOSURE CATEGORY	D
DIRECTIONALITY COEFFICIENT (Kd)	0.85
TOPOGRAPHIC FACTOR (Kzt)	1.0

1.6.2 DESIGN WIND PRESSURE – MAIN WINDFORCE RESISTING SYSTEM

LOCATION	CORNER ZONE WIDTH "a"	MEAN ROOF HEIGHT (h)	WINDWARD WALL (@ MEAN ROOF HEIGHT)	LEEWARD WALL (@ MEAN ROOF HEIGHT)	ROOF
FIELD ZONE	N/A	3890mm	582 N/m^2	–463 N/m^2	–803 N/m^2
CORNER ZONE	900mm	3890mm	883 N/m^2	–689 N/m^2	–1244 N/m^2

a = 10% OF LEAST HORIZONTAL DIMENSION OR 0.4h, WHICHEVER IS SMALLER, BUT NOT LESS THAN EITHER 4% OF LEAST HORIZONTAL DIMENSION OR 0.9M.
h = MEAN ROOF HIEGHT, IN METERS, EXCEPT THAT EAVE HIEGHT SHALL BE USED FOR ANGLE GREATER THAN 10°.

1.6.3 DESIGN WIND PRESSURE – WALL COMPONENTS AND CLADDING

EXTERIOR WALL SYSTEMS & THEIR ATTACHMENTS TO THE PRIMARY STRUCTURE SHALL BE DESIGNED FOR THE PRESSURES SHOWN IN THE DIAGRAM BELOW:

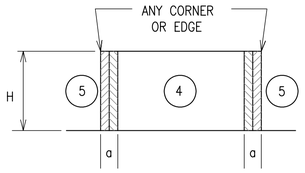

LOCATION	WINDWARD PRESSURE N/m^2 (inward)		LEEWARD PRESSURE N/m^2 (outward)		a
	④	⑤	④	⑤	
MAIN BUILDING					(mm)
AREA = 1 m^2	627	627	–986	–1216	900
AREA = 2 m^2	589	589	–948	–1134.8	900
AREA = 5 m^2	565	565	–910	–1086.9	900
AREA = 10 m^2	565	565	–910	–1086.9	900

NOTES:
1. DESIGN WIND PRESSURES ABOVE REPRESENT THE NET PRESSURE (SUM OF INTERNAL AND EXTERNAL PRESSURE) APPLIED NORMAL TO ALL SURFACES.
2. LINEAR INTERPOLATION BETWEEN VALUES OF TRIBUTARY AREA IS PERMISSIBLE.
3. PLUS AND MINUS SIGNS SIGNIFY PRESSURE TOWARD AND AWAY FROM THE EXTERIOR SURFACE, RESPECTIVELY.

1.6.4 DESIGN WIND PRESSURE – ROOF COMPONENTS AND CLADDING

ROOF COMPONENTS & THEIR ATTACHMENTS SHALL BE DESIGNED FOR THE PRESSURES SHOWN IN THE ADJACENT DIAGRAM & TABLE BELOW:

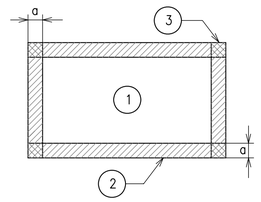

ROOF MEAN HEIGHT

1.6 WIND LOADS (CON'T)

LOCATION	GROSS UPLIFT PRESSURE N/m^2 (upward)			a
	①	②	③	
MAIN BUILDING				(mm)
AREA = 1 m^2	–838	–1460	–1460	900
AREA = 2 m^2	–838	–1460	–1460	900
AREA = 5 m^2	–838	–1460	–1460	900
AREA = 10 m^2	–838	–1460	–1460	900

NOTES:
1. DESIGN WIND PRESSURES ABOVE REPRESENT THE NET PRESSURE (SUM OF INTERNAL AND EXTERNAL PRESSURE) APPLIED NORMAL TO ALL SURFACES.
2. LINEAR INTERPOLATION BETWEEN VALUES OF TRIBUTARY AREA IS PERMISSIBLE.
3. PLUS AND MINUS SIGNS SIGNIFY PRESSURE TOWARD AND AWAY FROM THE EXTERIOR SURFACE, RESPECTIVELY.

2.0 FOUNDATION DESIGN CRITERIA (TO BE CONFIRMED BY THE CONTRACTOR)

THE GEOTECHNICAL ANALYSIS FOR THIS PROJECT IS THE RESPONSIBILITY OF THE CONTRACTOR AWARDED THE WORK. DESIGN VALUES USED IN THE STRUCTURAL ANALYSIS OF THE BUILDINGS HEREIN INDICATED HAVE BEEN ASSUMED AND SHALL BE CONFIRMED AND VERIFIED AS PART OF THE GEOTECHNICAL INVESTIGATION. VALUES WHICH DO NOT MEET THE REQUIREMENTS INDICATED BELOW SHALL BE IMMEDIATELY BROUGHT TO THE ATTENTION OF THE CONTRACTING OFFICER FOR CONSIDERATION AND DETERMINATION ON THE NEXT APPROPRIATE COURSE OF ACTION.

2.1.1 SOIL DESIGN PARAMETERS

NET ALLOWABLE SOIL BEARING CAPACITY	96.0 KPa
UNIT WEIGHT OF SOIL (moist)	1800 Kg/m^3
COEFF ACTIVE EARTH PRESSURE (Kpa)	0.30
COEFF PASSIVE EARTH PRESSURE (Kpp)	3.33
COEFF AT–REST EARTH PRESSURE (Kpr)	.55
COEFF OF SOIL FRICTION	.35
SUBGRADE MODULUS	4120 g/m^3
MINIMUM BEARING DEPTH BELOW GRADE	800mm
SEISMIC SITE CLASS (based on in–situ soil)	D

MASONRY CONCRETE LINTEL SCHEDULE

OPENING TYPE OR SIZE, BEAM LOCATION OR TYPE	MAX SPAN (mm)	BEAM DEPTH (mm)	MAIN REINFORCING			SHEAR REINF STIRRUPS
			TOP	BOTTOM	OTHER	
EXT WINDOW OR DOOR	900	400	(2)–#13	(2)–#13		----
INT WALL OPENING, NON–BEARING	1800	400		(2)–#13		----
INT WALL OPENING, NON–BEARING	900	200		(2)–#13		----

1. STRUCTURAL DRAWINGS DO NOT INDICATE ALL OPENINGS IN MASONRY WALLS. VERIFY NUMBER, SIZE AND LOCATION OF ALL OPENINGS IN MASONRY WALLS FROM ARCHITECTURAL SHEETS AND APPROVED PLUMBING, MECHANICAL, AND ELECTRICAL SHOP DRAWINGS.
2. PROVIDE 200mm BEARING EA END FOR 200mm DEEP CMU LINTEL PROVIDE 400mm BEARING EA END FOR 400mm DEEP CIPL.
3. FOR HEAD DETAILS REFER TO ARCHITECTURAL SHEETS.
4. REINFORCING SHALL BE ASTM A615M, GRADE 400. CONCRETE FOR CAST–IN–PLACE BEAMS SHALL HAVE A MINIMUM COMPRESSIVE STRENGTH OF 28 MPa AT 28 DAYS.
5. CONTRACTOR SHALL SUBMIT FOR APPROVAL SHOP DRAWINGS AND SCHEDULES SHOWING SIZE, DETAILS, LOCATIONS, ETC FOR ALL CAST–IN–PLACE BEAMS IN CMU WALLS.

CONCRETE COVER SCHEDULE

MINIMUM CONCRETE COVER PROTECTION FOR REINFORCEMENT BARS SHALL BE AS FOLLOWS: (SEE ACI 318M–05, SECTION 7.7 FOR CONDITIONS NOT NOTED). DIMENSIONS FOR BAR PLACEMENT GIVEN IN SECTIONS AND DETAILS SHALL SUPERSEDE MINIMUM COVER REQUIREMENTS GIVEN HERE. DIMENSIONS ARE IN mm.

FOOTINGS (EARTH FORMED)		70
COLUMNS / PIERS (TO TIES)		40
GRADE BEAMS OR SLAB TURNED DOWN EDGES:		
TOP		40
BOTTOM (EARTH FORMED)		70
SIDES (EARTH FORMED)		70
SIDES (BOARD FORMED)	#16 BAR & SMALLER	40
	#19 THRU #36 BAR	50
ELEVATED BEAMS & SLABS:		
BEAM TIES & STIRRUPS (NOT EXPOSED TO WEATHER)		40
BEAM TIES & STIRRUPS (EXPOSED TO WEATHER)		50
FLOOR SLABS (NOT EXPOSED TO WEATHER)		20
FLOOR SLABS (EXPOSED TO WEATHER)		
#19 & LARGER		50
#13 & SMALLER		40
ROOF SLAB BARS		25
SLABS–ON–GRADE (NO EXPOSURE TO WEATHER) FROM TOP		20
SLABS–ON–GRADE (EXPOSURE TO WEATHER) FROM TOP		40
UTILITY TUNNEL WALLS, RETAINING WALLS AND SHEAR WALLS, (NO SURFACES SHALL BE EARTH FORMED) EARTH SIDE AND FRONT SIDE (EXPOSED TO WEATHER):		
#16 BAR AND SMALLER		40
#19 THRU #36 BAR		50

PROVIDE STANDARD BAR CHAIRS AND SPACERS AS REQUIRED TO MAINTAIN CONCRETE PROTECTION SPECIFIED.

US Army Corps of Engineers
Afghanistan Engineer District

SYMBOL	DESCRIPTION	DATE	APP

DESIGNED BY: GDH | DATE: 09–30–09
DWN BY: MDB | SUBMITTED BY: BAKER
CHK BY: CWW | FILE NO.: ANPSDS–002XXX

Michael Baker Jr., Inc
A unit of Michael Baker Corporation
Airside Business Park
100 Airside Drive
Moon Township, PA 15108
www.mbakercorp.com

AFGHAN NATIONAL POLICE
STANDARD DESIGN
WELL HOUSE

DESGIN CRITERIA & SCHEDULES

SHEET REFERENCE NUMBER:
S2

100% SUBMISSION

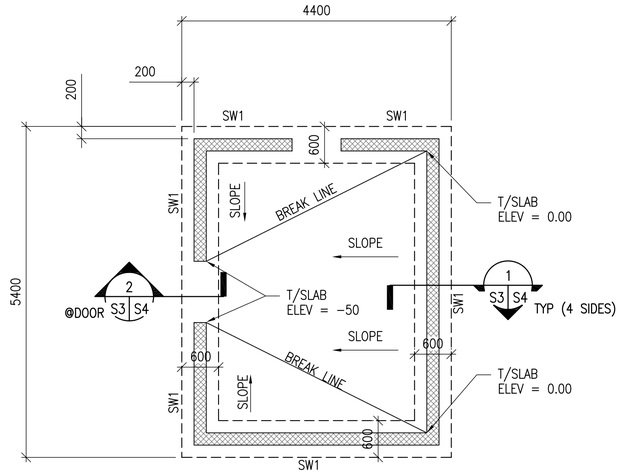

1 S3 S3 WELL HOUSE FOUNDATION PLAN

SCALE: 1:50

N

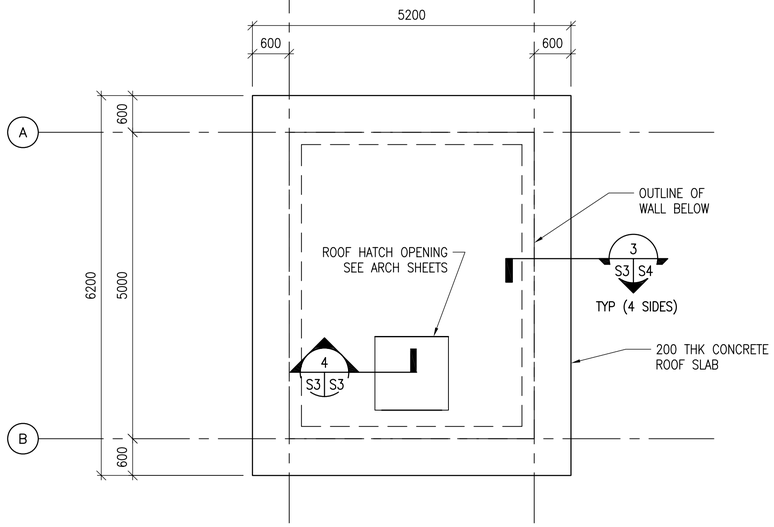

2 S3 S3 WELL HOUSE ROOF FRAMING PLAN

SCALE: 1:50

N

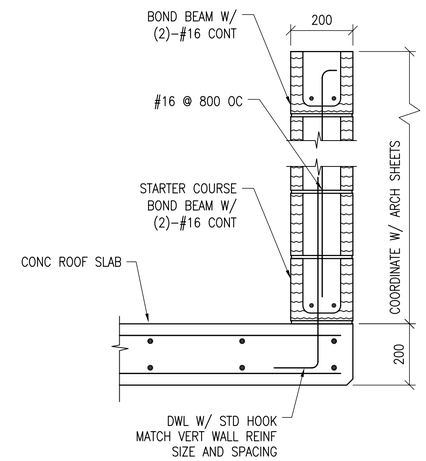

4 S3 S3 SECTION

SCALE: 1:10

NOTES:

1. FINISH FIRST FLOOR ELEVATION SHALL BE (DATUM 0.0) ALL PLUS OR MINUS DIMENSIONS INDICATED ON PLAN OR REFERRED TO IN NOTES RELATE TO FINISH FIRST FLOOR ELEVATION.
2. TOP OF EXTERIOR FOOTINGS SHALL BE -600 UNLESS OTHERWISE INDICATED.
3. UNLESS OTHERWISE INDICATED, FLOORS SHALL BE 150 THICK CONCRETE SLAB-ON-GRADE W/ 13 DIA REBAR @ 450 OC E.W. (38 CLR. TOP)
4. REFER TO SHEET S1 AND S2 FOR STRUCTURAL NOTES, ABBREVIATIONS AND SYMBOLS.
5. REFER TO ARCHITECTURAL SHEETS FOR MASONRY PARTITION TYPES AND SHEET S5 REINFORCEMENT.
6. SEE MECHANICAL AND ELECTRICAL SHEETS FOR CONCRETE PAD LOCATIONS, SIZES, AND THICKNESS NOT SHOWN. SEE SHEET S5 FOR DETAILS.
7. ⟶ INDICATES SLOPE IN SLAB ON GRADE. COORDINATE LOCATION AND ELEVATION WITH ARCHITECTURAL AND PLUMBING SHEETS (TYP).
8. COORD W/ ARCHITECTURAL SHEETS FOR COLD-FORMED STEEL OVERBUILT FRAMING ABOVE ROOF SLAB.
9. COLD-FORMED METAL OVERBUILT ROOF FRAMING NOT SHOWN FOR CLARITY. SEE OVERBUILT ROOF FRAMING DETAILS AND SECTIONS ON SHEET S4.

UNLESS OTHERWISE NOTED, LINEAR DIMENSIONS SHOWN ARE IN MILLIMETERS (MM)

0 200 400 800
SCALE: 1: 10

0 1000 2000 4000
SCALE: 1: 50

US Army Corps of Engineers
Afghanistan Engineer District

	DATE	DESCRIPTION	APP'D

DESIGNED BY: GDH	DATE: 09-30-09		
DWN BY: MDB	SUBMITTED BY: BAKER		
CHK BY: CWW	FILE NO.: ANPSDS-103XXX		

Michael Baker Jr., Inc
A unit of Michael Baker Corporation
Airside Business Park
100 Airside Drive
Moon Township, PA 15108
www.mbakercorp.com

AFGHAN NATIONAL POLICE
STANDARD DESIGN
WELL HOUSE

FOUNDATION & ROOF FRAMING PLANS

SHEET REFERENCE NUMBER:
S3

100% SUBMISSION

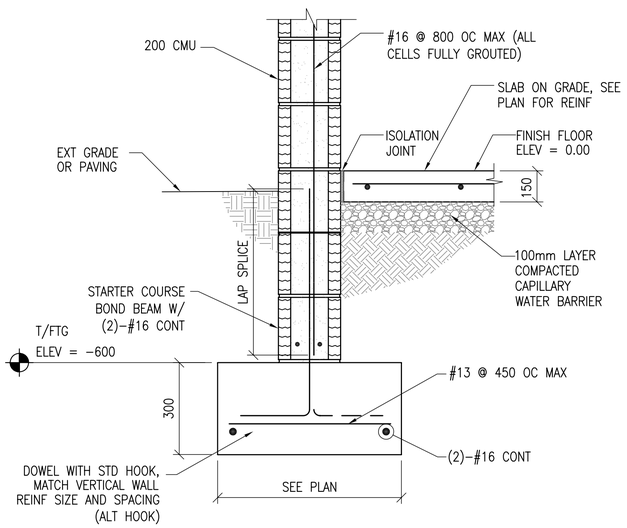

1 S3 S4 **SECTION**
SCALE: 1:10

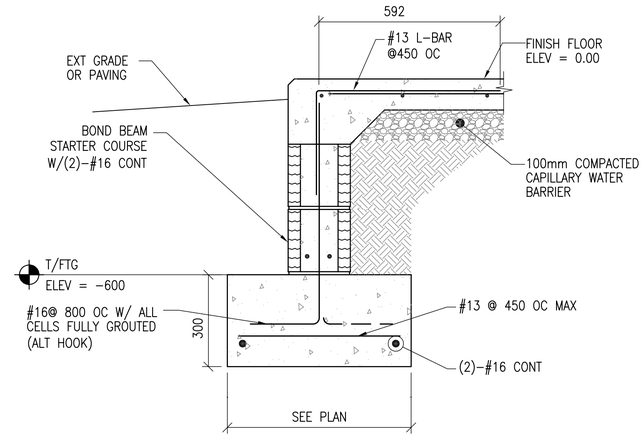

2 S3 S4 **SECTION**
SCALE: 1:10

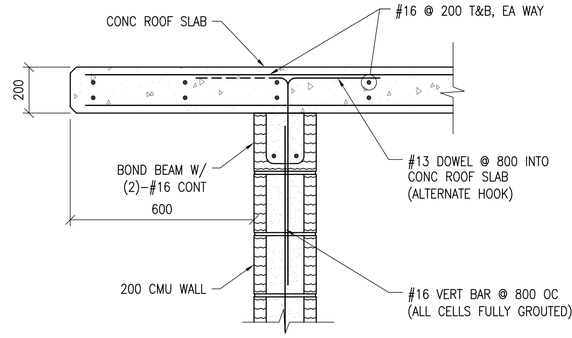

3 S3 S4 **SECTION**
SCALE: 1:10

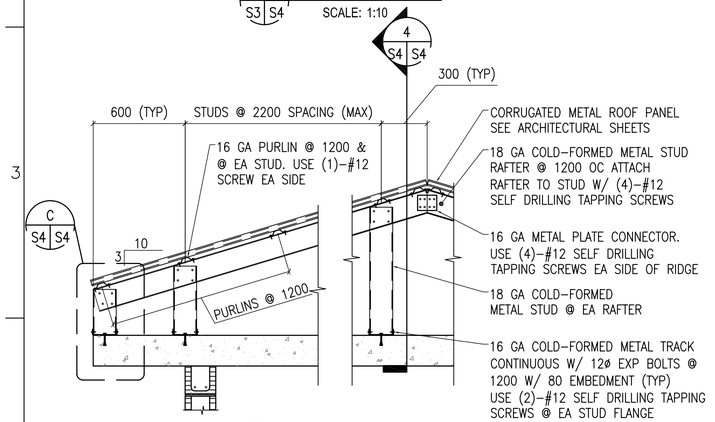

NOTES:
1. SEE NOTES ON SHEET S1 FOR OVERBUILT ROOF FRAMING MEMBER SECTION PROPERTY MINIMUM REQUIREMENTS
2. AT END OF BLDG PROVIDE TRANSVERSE BRACE @ 2400 OC SIMILAR TO LONGITUDINAL BRACING

A S4 S4 **TYPICAL OVERBUILT ROOF FRAMING DETAIL**
SCALE: 1:20

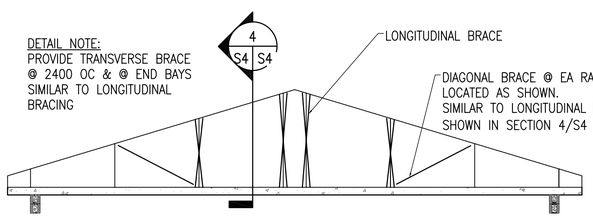

B S4 S4 **TYPICAL ROOF BRACE LAYOUT DETAIL**
SCALE: NTS

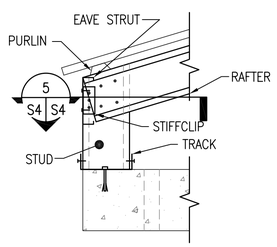

C S4 S4 **DETAIL**
SCALE: 1:10

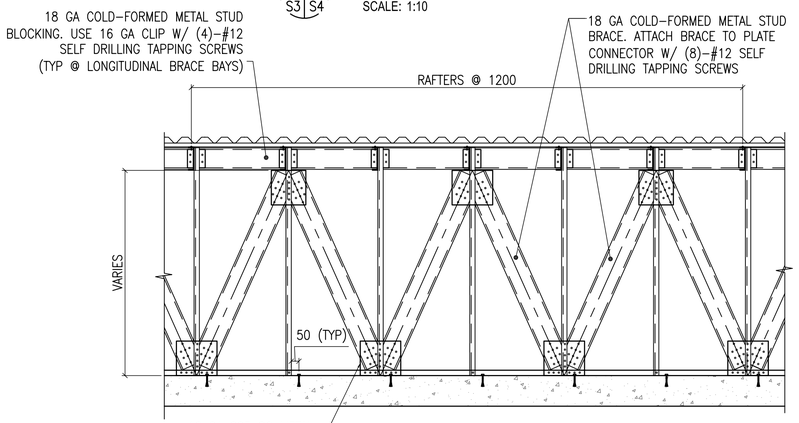

4 S4 S4 **SECTION**
SCALE: NTS

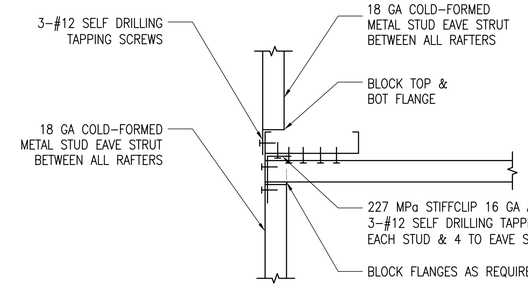

5 S4 S4 **SECTION**
SCALE: 1:5

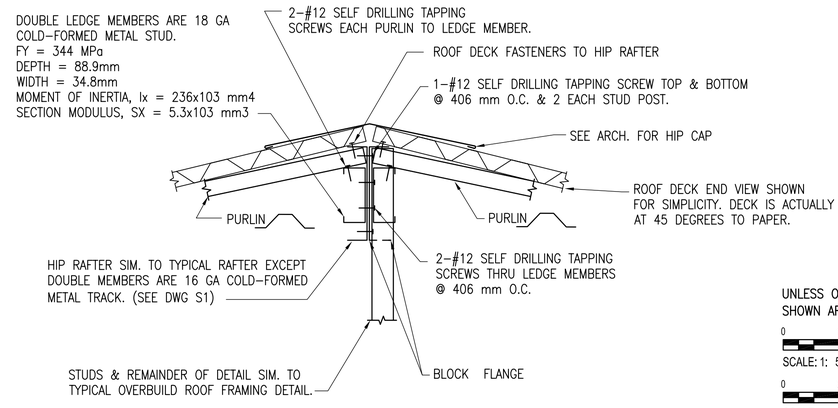

TYPICAL HIP FRAMING DETAIL
SCALE: 1:5

UNLESS OTHERWISE NOTED, LINEAR DIMENSIONS SHOWN ARE IN MILLIMETERS (MM)

0 100 200 400
SCALE: 1: 5

0 200 400 800
SCALE: 1: 10

0 400 800 1600
SCALE: 1: 20

US Army Corps of Engineers
Afghanistan Engineer District

SYMBOL	DESCRIPTION	DATE	APP

DESIGNED BY: GDH	DATE: 09-30-09	FILE NO.: ANPSDS-304XXX
DWN BY: MDB	SUBMITTED BY: BAKER	
CHK BY: CWW		

Michael Baker Jr., Inc
A unit of Michael Baker Corporation
Airside Business Park
100 Airside Drive
Moon Township, PA 15108
www.mbakercorp.com

AFGHAN NATIONAL POLICE
STANDARD DESIGN
WELL HOUSE

SECTIONS AND DETAILS

SHEET REFERENCE NUMBER:
S4

100% SUBMISSION

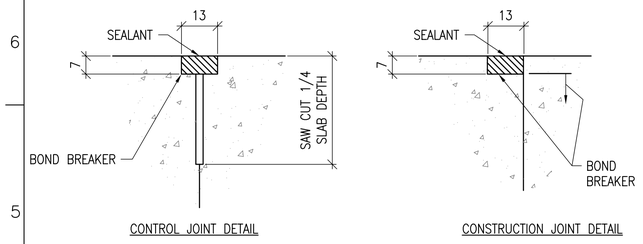

CONTROL JOINT DETAIL

CONSTRUCTION JOINT DETAIL

1 S5 TYPICAL CONCRETE SLAB JOINT FINISH DETAIL

SCALE: NTS

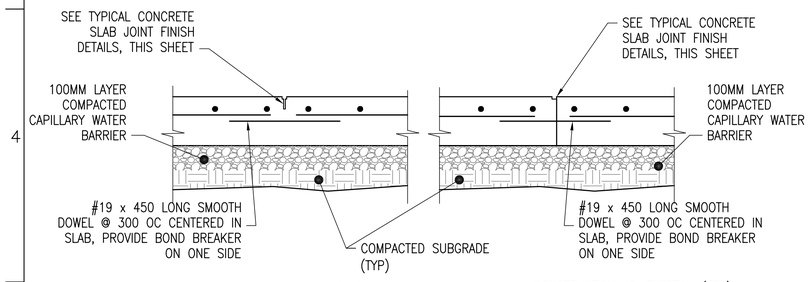

CONTROL JOINT DETAIL (CTJ)

CONSTRUCTION JOINT DETAIL (CSJ)

2 S5 TYPICAL SLAB ON GRADE JOINT DETAILS

SCALE: NTS

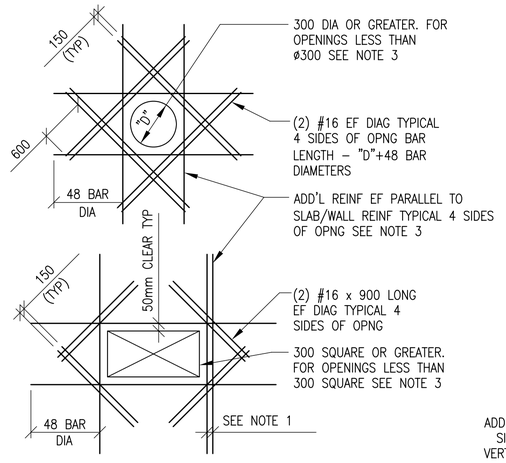

SLAB OPENINGS

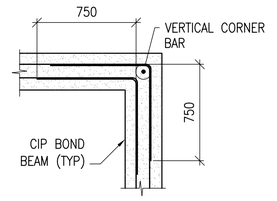

BOND BEAM CORNER

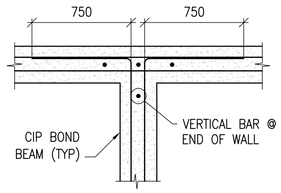

BOND BEAM INTERSECTION

5 S5 CIP BOND BEAM DETAILS

SCALE: NTS

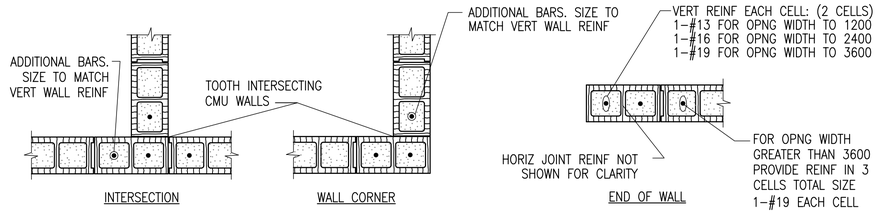

INTERSECTION

WALL CORNER

END OF WALL

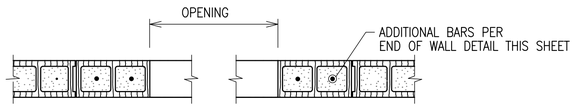

MASONRY OPENING W/ LINTEL

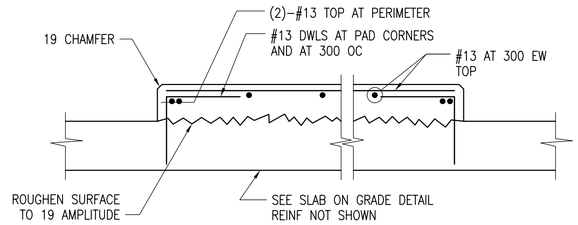

DETAIL NOTE:
1. COORDINATE EQUIPMENT PAD SIZE AND LOCATIONS W/ ELECTRICAL/MECHANICAL SHEETS AND EQUIPMENT MANUFACTURER.

3 S5 INTERIOR EQUIPMENT PAD DETAIL

SCALE: NTS

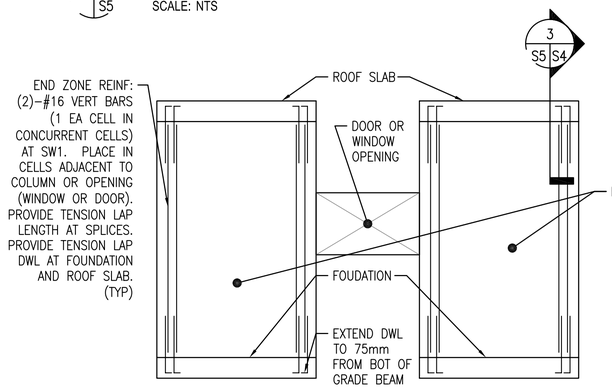

DETAIL NOTE:
1. PROVIDE (2)-#16 IN BOND BEAMS AT 1200 OC, NOT SHOWN.

4 S5 SPECIAL REINFORCED MASONRY SHEAR WALL ELEVATION

SCALE: NTS

NOTES:
1. OPNG WIDTH SHALL NOT EXCEED 3600 FOR THIS TYPE OF JAMB
2. ALL CELLS FULLY GROUTED

6 S5 TYPICAL CMU DETAILS

SCALE: NTS

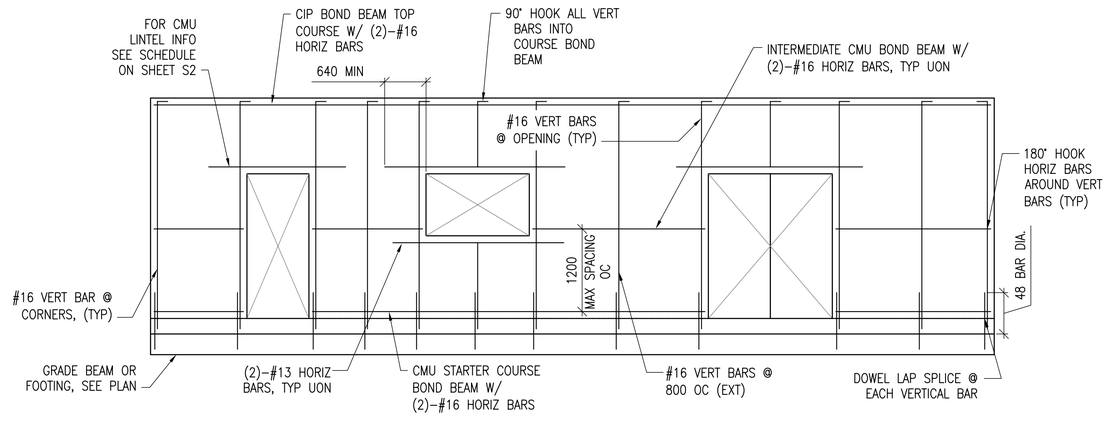

7 S5 MIN CMU WALL REINFORCING

SCALE: NTS

UNLESS OTHERWISE NOTED, LINEAR DIMENSIONS SHOWN ARE IN MILLIMETERS (MM)

US Army Corps of Engineers
Afghanistan Engineer District

SYMBOL	DESCRIPTION	DATE	APP

DESIGNED BY: GDH	DATE: 09-30-09
DWN BY: RCG	SUBMITTED BY: BAKER
CHK BY: CWW	FILE NO.: ANPSDS-505XXX

Michael Baker Jr., Inc
A unit of Michael Baker Corporation
Airside Business Park
100 Airside Drive
Moon Township, PA 15108
www.mbakercorp.com

AFGHAN NATIONAL POLICE
STANDARD DESIGN
WELL HOUSE

TYPICAL DETAILS

SHEET REFERENCE NUMBER:
S5

100% SUBMISSION

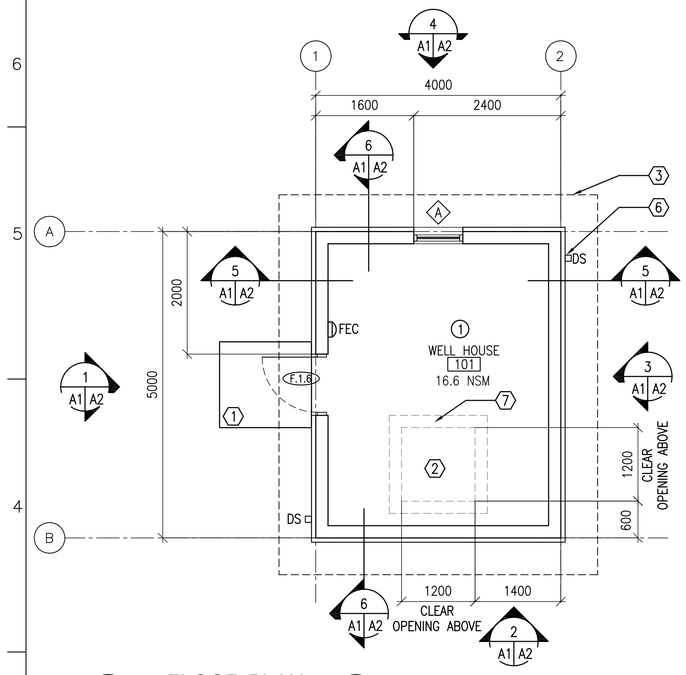

1 A1 A1 **FLOOR PLAN**

SCALE: 1:50

20.0 GSM

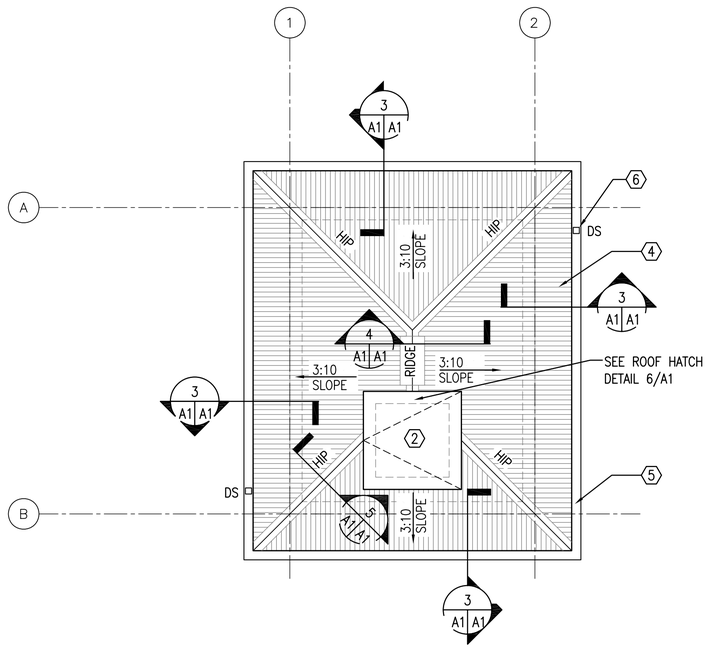

2 A1 A1 **ROOF PLAN**

SCALE: 1:50

GENERAL NOTES:

A. OPENINGS FOR DOORS SHALL BE LOCATED 200 FROM THE ADJACENT WALL UNLESS NOTED OTHERWISE

B. SURFACES TO BE PAINTED SHALL BE CLEAN AND FREE OF FOREIGN MATTER BEFORE APPLICATION OF PAINT. CLEANING SHALL BE SCHEDULED SO THAT DUST AND OTHER CONTAMINANTS WILL NOT FALL ON WET, NEWLY PAINTED SURFACES.

C. CONCRETE AND INTERIOR MASONRY SURFACES GROUTED SOLID SHALL BE ALLOWED TO DRY AT LEAST 30 DAYS BEFORE PAINTING EXCEPT CONCRETE SLAB ON GRADE WHICH SHALL BE ALLOWED TO CURE 90 DAYS BEFORE PAINTING.

D. PAINTS CONTAINING LEAD IN EXCESS OF 0.06 PERCENT BY WEIGHT OF THE TOTAL NONVOLATILE CONTENT SHALL NOT BE USED.

E. MERCURIAL FUNGICIDES SHALL NOT BE USED IN OIL–BASE PAINT.

F. REMOVE LOOSE DIRT AND CLEAN SURFACES BEFORE PAINTING. APPLY PAINT TO INTERIOR STRUCTURAL RIGID FRAMINGS AND CEILINGS AND TEST FOR ADHESION. PRIMER COAT FOR MASONRY. INITIAL FIRST COAT WITH AN ACRYLIC LATEX PAINT FOR EXTERIOR SURFACES AND A SECOND COAT WITH A WATER REPELLENT ACRYLIC LATEX PAINT.

G. METAL DOORS AND FRAMES SHALL RECEIVE A PRIMER COAT PLUS TWO COATS OF PAINT.

H. DIMENSIONS ARE TO STRUCTURAL COLUMN GRID, EDGE OF WINDOW OPENINGS, AND TO HINGE SIDE OF DOOR OPENINGS.

KEY NOTES: (X)

1. CONCRETE STOOP – RE: DETAIL 7/A3
2. ROOF HATCH ABOVE, CENTER ON WELL PUMP
3. LINE OF ROOF OVERHANG ABOVE.
4. CORRUGATED METAL ROOF PANEL ON COLD–FORMED METAL FRAMING
5. METAL GUTTER.
6. METAL DOWNSPOUT WITH SPLASH BLOCK.
7. 200 MM CMU WITH EXTERIOR STUCCO

ROOM FINISHES: (X)

1. WALLS: PAINTED PLASTER,
   FLOOR: SEALED CONCRETE
   CEILING: PAINTED PLASTER APPLIED TO STRUCTURE

LEGEND:

- F.1.4 — DOOR TYPE, SEE SHEET A3
- A — WINDOW TYPE, SEE SHEET A3
- (X) — KEY NOTE
- FEC — FIRE EXTINGUISHER CABINET
- (1) — ROOM FINISH DESIGNATION

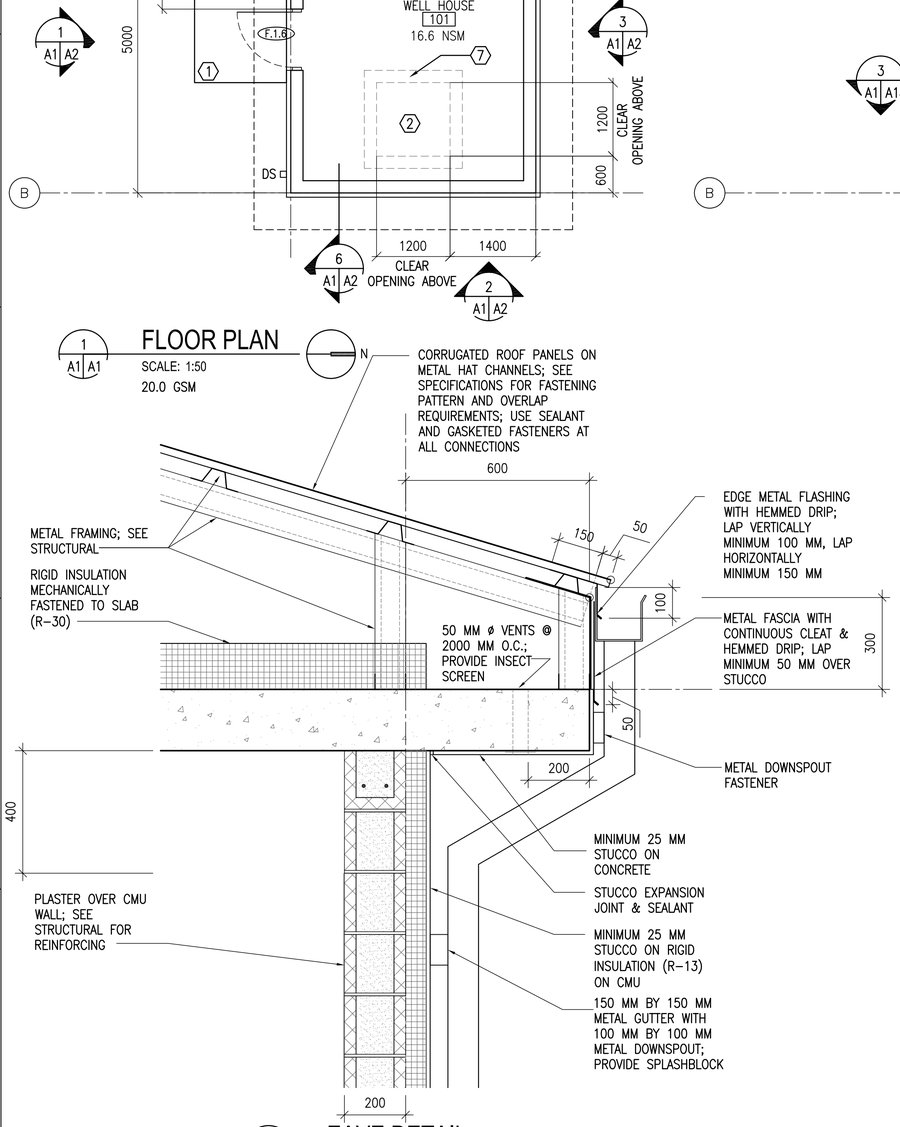

3 A1 A1 **EAVE DETAIL**

SCALE: 1:10

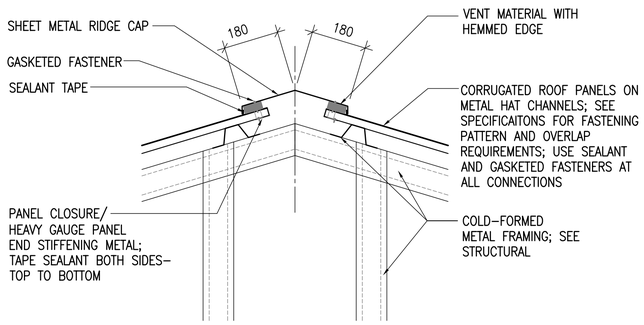

4 A1 A1 **RIDGE VENT DETAIL**

SCALE: 1:10

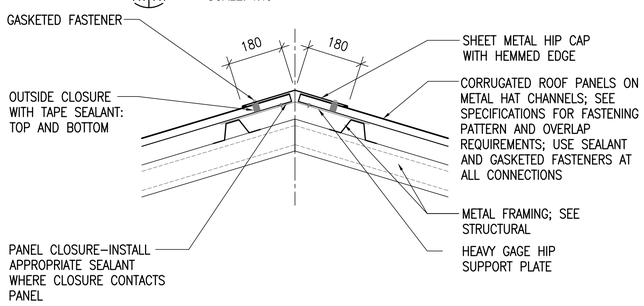

5 A1 A1 **HIP DETAIL**

SCALE: 1:10

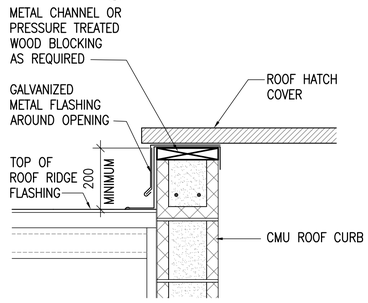

ROOF HATCH TO BE CENTERED ON WELL PUMP – SEE P1

6 A1 A1 **ROOF HATCH**

SCALE: 1:10

UNLESS OTHERWISE NOTED, LINEAR DIMENSIONS SHOWN ARE IN MILLIMETERS (MM)

0 200 400 800

SCALE: 1: 10

0 1000 2000 4000

SCALE: 1: 50

US Army Corps of Engineers
Afghanistan Engineer District

DESIGNED BY: PFF	DWN BY: ECN	CHK BY: NLJ
DATE: 09–30–09	SUBMITTED BY: BAKER	FILE NO.: ANPSDA–101XXX

SYMBOL	DESCRIPTION	DATE	APP'D

Michael Baker Jr., Inc
A unit of Michael Baker Corporation
Airside Business Park
100 Airside Drive
Moon Township, PA 15108
www.mbakercorp.com

AFGHAN NATIONAL POLICE
STANDARD DESIGN
WELL HOUSE

FLOOR AND ROOF PLANS AND DETAILS

SHEET REFERENCE NUMBER:

A1

100% SUBMISSION

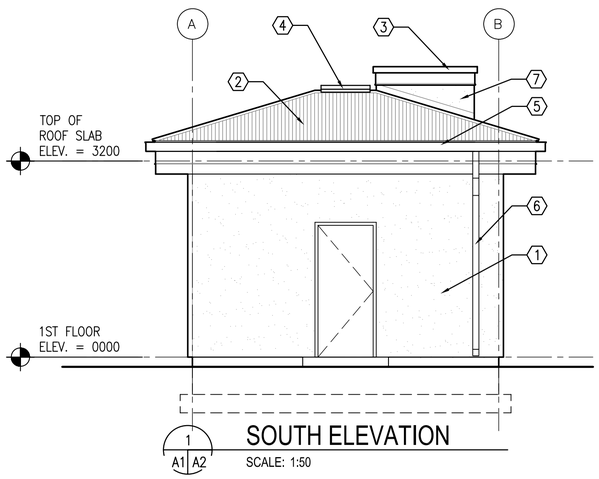

1 A1 A2 SOUTH ELEVATION

SCALE: 1:50

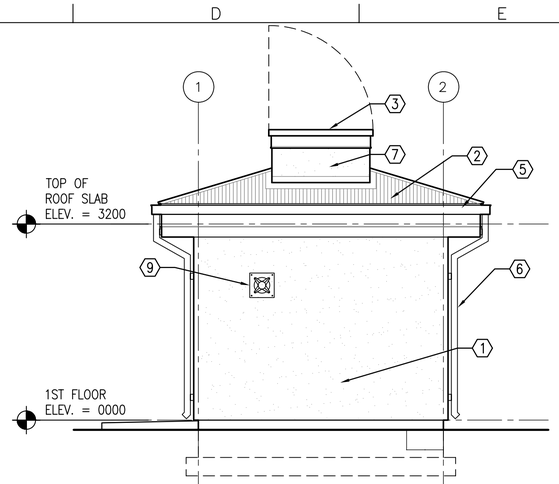

2 A1 A2 EAST ELEVATION

SCALE: 1:50

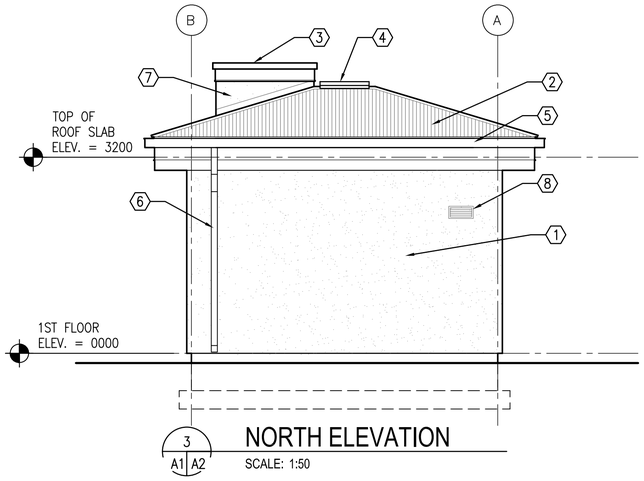

3 A1 A2 NORTH ELEVATION

SCALE: 1:50

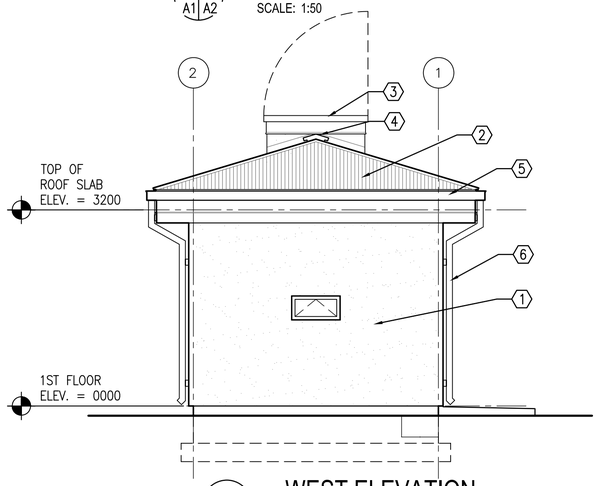

4 A1 A2 WEST ELEVATION

SCALE: 1:50

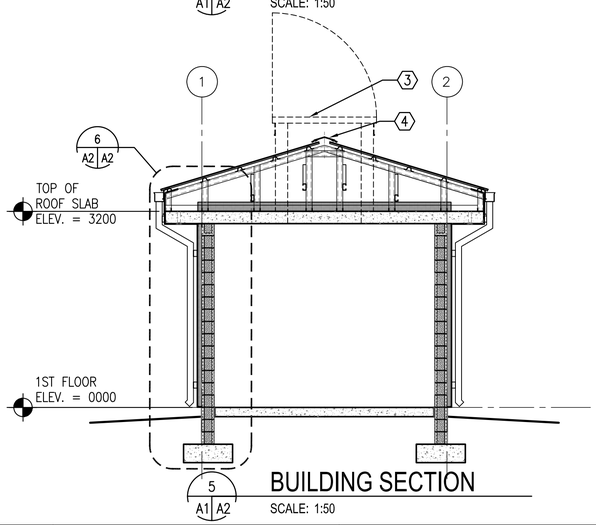

5 A1 A2 BUILDING SECTION

SCALE: 1:50

KEY NOTES: (X)

1. STUCCO AND RIGID INSULATION SYSTEM ON CMU
2. CORRUGATED METAL ROOF PANELS ON COLD-FORMED METAL FRAMING
3. ROOF HATCH WITH CURB. CENTER ON WELL PUMP – RE: CIVIL
4. RIDGE VENT
5. METAL GUTTER
6. METAL DOWNSPOUT WITH SPLASH BLOCK
7. STUCCO ON CMU
8. LOUVER – RE: MECHANICAL
9. EXHAUST FAN – RE: MECHANICAL

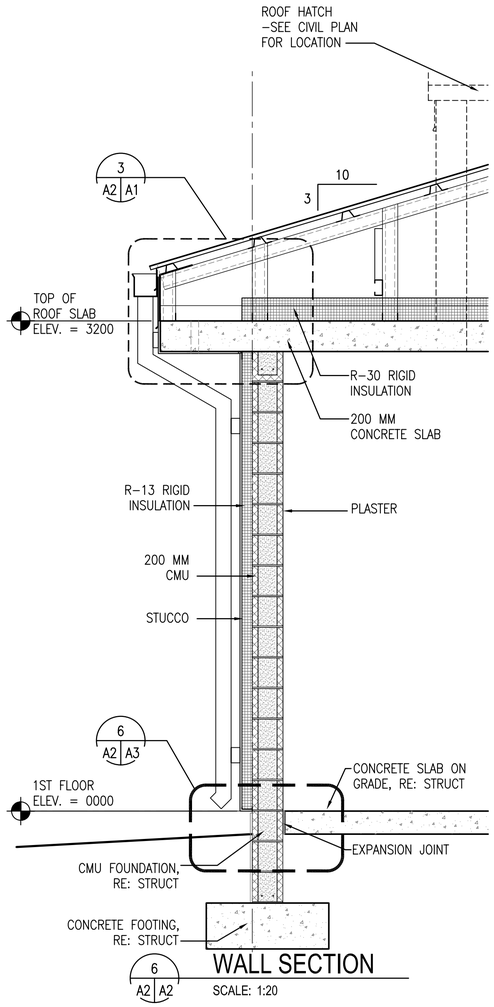

6 A2 A2 WALL SECTION

SCALE: 1:20

UNLESS OTHERWISE NOTED, LINEAR DIMENSIONS SHOWN ARE IN MILLIMETERS (MM)

0 400 800 1600

SCALE: 1: 20

0 1000 2000 4000

SCALE: 1: 50

US Army Corps of Engineers

Afghanistan Engineer District

SYMBOL	DESCRIPTION	DATE	APP

DESIGNED BY:	DATE:	
PFF	09-30-09	
DWN BY:	SUBMITTED BY:	
ECN	BAKER	
CHK BY:	FILE NO.:	
NLJ	ANPSDA-202XXX	

Michael Baker Jr, Inc
A unit of Michael Baker Corporation
Airside Business Park
100 Airside Drive
Moon Township, PA 15108
www.mbakercorp.com

AFGHAN NATIONAL POLICE
STANDARD DESIGN
WELL HOUSE

EXTERIOR ELEVATIONS

SHEET REFERENCE NUMBER:

A2

100% SUBMISSION

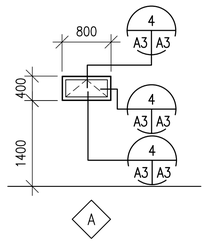

1 A3 A3 WINDOW TYPES
SCALE: 1:50

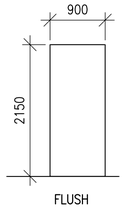

F

2 A3 A3 DOOR TYPES
SCALE: 1:50

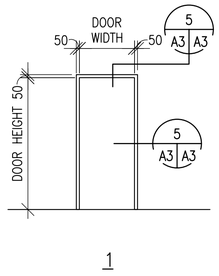

1

3 A3 A3 FRAME TYPES
SCALE: 1:50

WINDOW TYPES NOTES:

1. ALL EXTERIOR WINDOWS SHALL BE WOOD WITH INSECT SCREENS. WINDOWS SHALL BE COMMERCIAL GRADE.
2. GLAZING SHALL BE ACRYLIC SHEET.

DOOR TYPES NOTES:

1. INTERIOR AND EXTERIOR METAL DOORS AND FRAME COLORS SHALL MATCH ADJACENT WALL COLORS AS SELECTED BY THE CONTRACTING OFFICER.
2. HARDWARE SHALL BE HEAVY DUTY, COMMERCIAL GRADE, STAINLESS STEEL WITH A MATTE FINISH.
3. FRAMES, EXCEPT FIRE-RATED FRAMES, SHALL BE MOUNTED AND ADJUSTED IN ACCORDANCE WITH MANUFACTURER'S INSTRUCTIONS. FRAMES SHALL BE FASTENED WITH MINIMUM OF THREE FASTENING POINTS PER SIDE AT REGULAR INTERVALS.
4. DIMENSIONS SHOWN ON DOOR SCHEDULE ARE BASED UPON MODULAR MASONRY (OR ROUGH OPENING), HEIGHT OF 2200mm FOR STANDARD PERSONNEL DOORS. CONTRACTOR SHALL COORDINATE WITH DOOR SUPPLIER TO ENSURE THAT DIMENSIONS OF DOORS AND FRAMES PROVIDED ARE COMPATIBLE WITH DOOR OPENING DIMENSIONS.

HARDWARE TYPES:

HW-6 1-1/2 PR HINGES
1 EA LOCKSET,F04 ENTRY LOCK W/LEVERS. GRADE 1
1 EA DOOR CLOSER, C02061,LOW RESISTANCE
1 EA THRESHOLD J32130

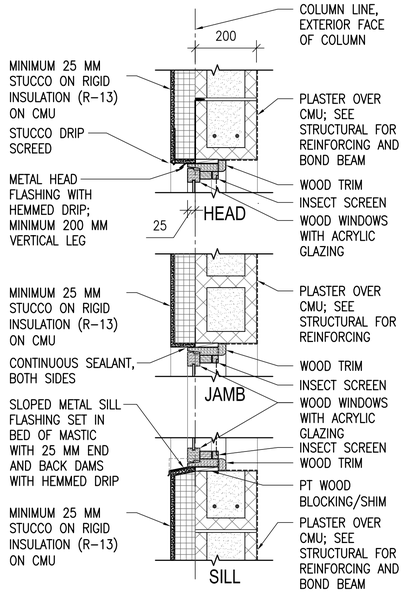

4 A3 A3 WINDOW DETAILS
SCALE: 1:10

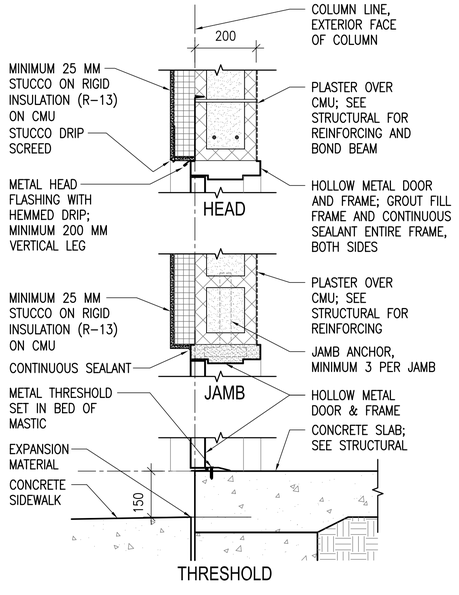

5 A3 A3 EXTERIOR DOOR DETAILS
SCALE: 1:10

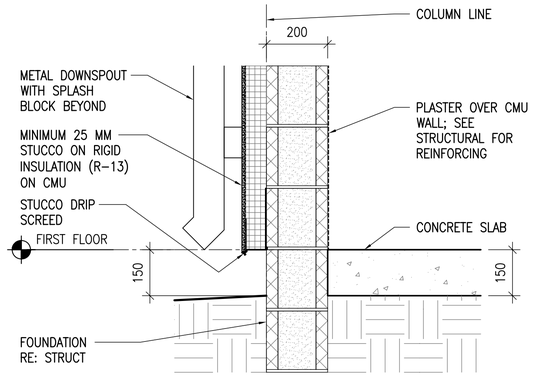

6 A3 A3 STUCCO BASE DETAIL
SCALE: 1:10

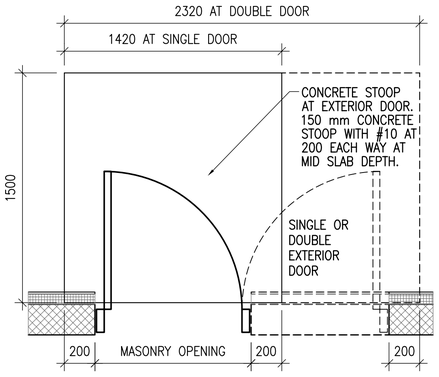

7 A3 A3 CONCRETE STOOP PLAN DETAIL
SCALE: 1:20

UNLESS OTHERWISE NOTED, LINEAR DIMENSIONS SHOWN ARE IN MILLIMETERS (MM)

0 200 400 800
SCALE: 1: 10

0 1000 2000 4000
SCALE: 1: 50

US Army Corps of Engineers
Afghanistan Engineer District

SYMBOL	DESCRIPTION	DATE	APP'D

DESIGNED BY: PFF	DATE: 09-30-09		
DWN BY: ECN	SUBMITTED BY: BAKER	CHK BY: NLJ	FILE NO.: ANPSDA-303XXX

Michael Baker Jr., Inc
A unit of Michael Baker Corporation
Airside Business Park
100 Airside Drive
Moon Township, PA 15108
www.mbakercorp.com

AFGHAN NATIONAL POLICE
STANDARD DESIGN
WELL HOUSE

DOOR, WINDOW & FINISH TYPES & DETAILS

SHEET REFERENCE NUMBER:
A3

100% SUBMISSION

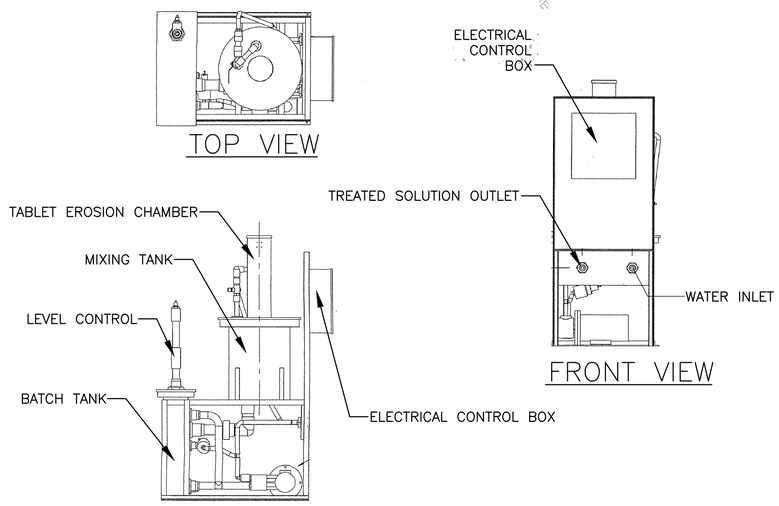

CHLORINE FEED SYSTEM
(Calcium Hypochorite Tablet Feeder)
N.T.S.

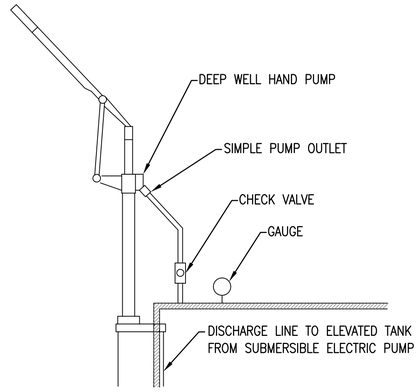

HAND PUMP INSTALLATION DETAIL
N.T.S.

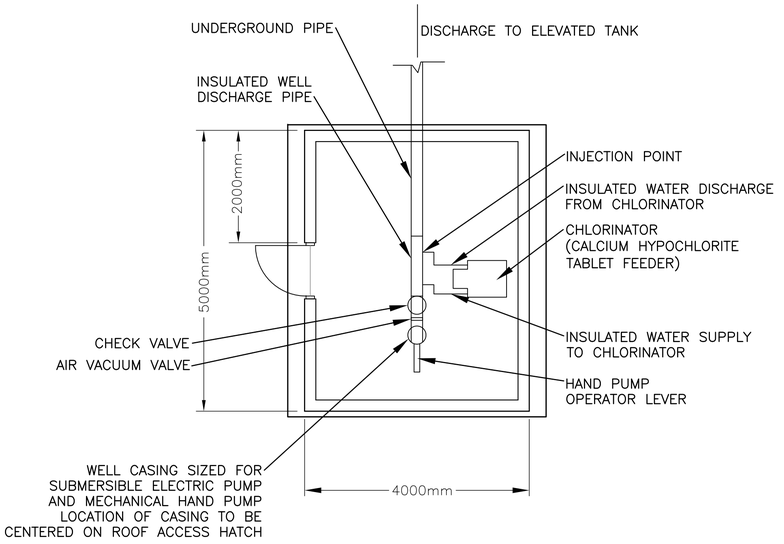

WELL HOUSE PLUMBING SCHEMATIC
N.T.S.

US Army Corps of Engineers
Afghanistan Engineer District

SYMBOL	DESCRIPTION	DATE	APR

DESIGNED BY: BAKER	DATE: 09-30-09
DWN BY: BAKER	SUBMITTED BY: BAKER
CHK BY: GPH	FILE NO.: ANPSDP-501XXX

Michael Baker Jr., Inc
A unit of Michael Baker Corporation
Airside Business Park
100 Airside Drive
Moon Township, PA 15108
www.mbakercorp.com

AFGHAN NATIONAL POLICE
STANDARD DESIGN
WELL HOUSE

PLUMBING SCHEMATIC AND DETAILS

SHEET REFERENCE NUMBER:
P1

100% SUBMISSION

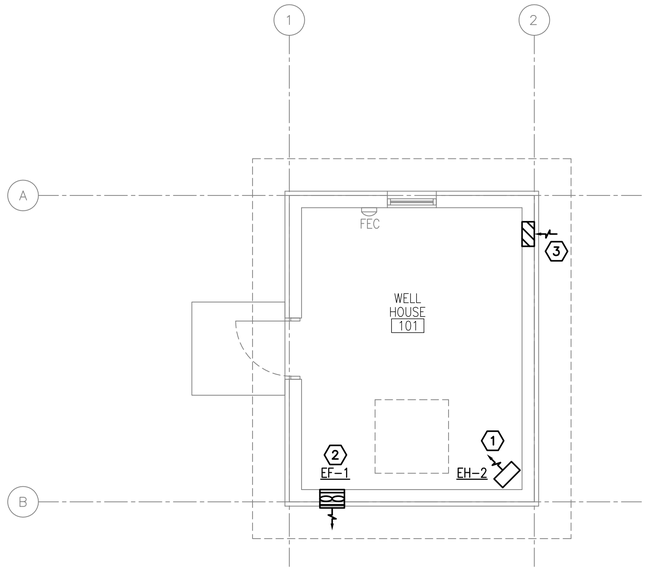

1 M1 M1 HVAC PLAN

SCALE: 1:50

N

GENERAL NOTES:

1. DO NOT SCALE DRAWINGS – ALL DIMENSIONS AND CONDITIONS SHALL BE CHECKED AND VERIFIED BY THE CONTRACTOR AT THE SITE.
2. ALL WORK PERFORMED ON THIS BUILDING SHALL BE IN COMPLIANCE WITH ALL PERTINENT CODES, RULES, ORDINANCES AND REGULATIONS OF THE GOVERNING AUTHORITIES.
3. ALL WORK PERFORMED UNDER AND IN CONNECTION WITH THESE DRAWINGS AND SPECIFICATIONS SHALL BE IN STRICT COMPLIANCE WITH THE LATEST SAFETY AND HEALTH STANDARDS.

NUMBERED NOTE:

(1) CORROSION RESISTANT ELECTRIC UNIT HEATER SUSPENDED FROM STRUCTURE ABOVE.

(2) CORROSION RESISTANT WALL MOUNTED EXHAUST FAN.

(3) 200x400 (8x16) LOW LEAKAGE GRAVITY WALL LOUVER FOR INTAKE. PROVIDE WEATHER PROOF LOUVER W/0.05mm (2") WASH DOWN FILTER AND SAND TRAP.

ELECTRIC UNIT HEATER SCHEDULE

NO.	CMS	KW	F.A.T. °C	ELECT. CHAR.	MOUNTING
EH–2	.200	2.6	33	370/1/50	CEILING

NOTES:
1. HEATERS SHALL BE CORROSION RESISTANT

EXHAUST FAN SCHEDULE

NO.	TYPE	FAN CMS	DRIVE	HP	SP mmH20	ELECT. CHAR.	SWITCH
EF–1	WALL	0.100	DIRECT	FRACT	13	220/1/50	@ WALL

NOTES:
1. WALL MOUNTED EXHAUST FAN MOUNT AT 600mm BELOW CEILING.
2. FANS SHALL HAVE LOW LEAKAGE GRAVITY LOUVER AND SECURITY GRILLE.
3. FANS SHALL BE EXPLOSION PROOF.

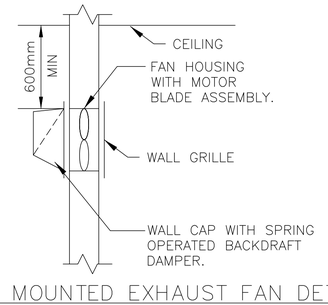

WALL MOUNTED EXHAUST FAN DETAIL
N.T.S.

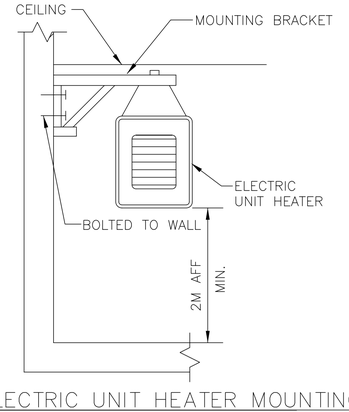

ELECTRIC UNIT HEATER MOUNTING
N.T.S.

US Army Corps of Engineers
Afghanistan Engineer District

SYMBOL	DESCRIPTION	DATE	APP

DESIGNED BY: RML	DWN BY: JJN	CHK BY: CJM
DATE: 09-30-09	SUBMITTED BY: BAKER	FILE NO.: ANPSDM-101XXX

Michael Baker Jr., Inc
A unit of Michael Baker Corporation
Airside Business Park
100 Airside Drive
Moon Township, PA 15108
www.mbakercorp.com

AFGHAN NATIONAL POLICE
STANDARD DESIGN
WELL HOUSE

HVAC PLAN

SHEET REFERENCE NUMBER:
M1

100% SUBMISSION

POWER

- DISTRIBUTION PANELBOARD
- NEW PANELBOARD – SURFACE
- NEW PANELBOARD – RECESSED
- EXISTING PANELBOARD
- (G) GENERATOR
- TVSS TRANSIENT VOLTAGE SURGE SURPRESSOR
- TRANSFORMER (DRAWN TO SIZE)
- PS POWER SUPPLY
- CP CONTROL PANEL
- TC TIME CLOCK
- TIM ASTRONOMICAL TIME CLOCK– "SEE SPEC."
- R RELAY WITH RATING AND NUMBER OF POLES AS NOTED ON DRAWINGS– "SEE SPEC."
- J JUNCTION BOX
- (J) JUNCTION BOX – CEILING
- PB PULL BOX
- BD BUS DUCT HORIZONTAL
- BUS DUCT VERTICAL
- EMERGENCY POWER OFF PUSH BUTTON
- NON–FUSIBLE SAFETY SWITCH
- FUSIBLE SAFETY SWITCH
- (M) MOTOR
- ^{M} MOTOR STARTING SWITCH – 20A RATED
- ^{K} KEY SWITCH – 20A RATED
- FC FAN COIL – FURNISHED BY MECHANICAL CONTRACTOR, ELECTRICAL CONTRACTOR SHALL INSTALL AND PROVIDE POWER CONNECTION
- UH UNIT HEATER – FURNISHED BY MECHANICAL CONTRACTOR, ELECTRICAL CONTRACTOR SHALL INSTALL AND PROVIDE POWER CONNECTION
- D JUNCTION BOX FOR CONNECTION TO GARBAGE DISPOSAL
- CF LIGHT/HEATER/FAN – FURNISHED BY MECHANICAL CONTRACTOR, ELECTRICAL CONTRACTOR SHALL INSTALL AND PROVIDE POWER CONNECTION
- ELECTRIC WATER HEATER
- EPO WEATHERPROOF / EXPLOSION PROOF EMERGENCY POWER OFF PUSH–BUTTON TO BE INTERCONNECTED WITH GENERATOR SHUT DOWN CONTROL
- CF CEILING FAN – REFER TO SPECIFICATION SECTION 26 20 00

RECEPTACLES

- DUPLEX 20A BRITISH STANDARD UNSWITCHED SOCKETS
- GF DUPLEX 20A BRITISH STANDARD UNSWITCHED SOCKETS – 10mA GROUND FAULT INTERRUPTER TYPE
- WP DUPLEX 20A BRITISH STANDARD UNSWITCHED SOCKETS – 10mA GROUND FAULT INTERRUPTER TYPE WITH WEATHERPROOF COVER
- EXP DUPLEX 20A BRITISH STANDARD UNSWITCHED SOCKETS – EXPLOSION PROOF
- * INDICATES MOUNT DEVICE ABOVE COUNTER TOP

LIGHTNING PROTECTION

- AIR TERMINAL 200mm O.D. X 4m SOLID COPPER, NICKEL PLATED ON ADHESIVE BASE.
- EQ EQUIPMENT AIR TERMINAL
- TEST WELL WITH GROUND ROD(S)
- GROUND ROD
- G GROUND PLATE
- MAIN GROUND CONDUCTER CONCEALED WITHIN CONSTRUCTION
- MAIN GROUND CONDUCTOR EXPOSED ON EXPOSED ON BUILDING EXTERIOR SURFACE
- GROUND CONDUCTOR CAD WELDED TO GROUND CABLE OR EQUIPMENT
- GROUND CONDUCTOR CAD WELDED TO BUILDING STEEL COLUMN
- GROUND ROD TRIPOD, SPACED 10 FEET APART.
- LEVEL TO LEVEL CABLE

LIGHTING

- LIGHTING FIXTURE – SEE FIXTURE SCHEDULE FOR MORE INFORMATION
- LIGHTING FIXTURE – SEE FIXTURE SCHEDULE FOR MORE INFORMATION
- DOWNLIGHT
- LIGHTING FIXTURE ON NORMAL/EMERGENCY
- WALL MOUNTED LIGHT FIXTURE
- E EXIT SIGN – DIRECTIONAL ARROWS AS INDICATED ON DRAWINGS
- B BATTERY PACK WITH HEADS AS INDICATED ON DRAWINGS
- REMOTE HEAD FOR BATTERY PACK
- $ SINGLE POLE SWITCH – 20A RATED
- ^{3} 3–WAY SWITCH – 20A RATED
- ^{4} 4–WAY SWITCH – 20A RATED
- PC PHOTOCELL VOLTAGE TO MATCH CIRCUITRY
- LC LIGHTING CONTACTOR
- POLE MOUNTED SITE LIGHTING FIXTURE– NUMBER OF FIXTURES PER POLE AS INDICATED ON DRAWINGS
- EXTERIOR DIRECTIONAL LIGHTING FIXTURE
- a SMALL CASE LETTERS REPRESENTS LAMP(S) / SWITCHES. WHEN USED WITH AN OCCUPANCY SENSOR THIS INDICATES SENSOR WITH MANUAL OVERRIDE SWITCH

TELECOMMUNICATIONS

- TELEPHONE OUTLET(S) @ 18" AFF. U.N.O. WITH 3/4" RACEWAY TERMINATED ABOVE NEAREST ACCESSIBLE CEILING OR TO TELEPHONE TERMINAL BOARD IF NO ACCESSIBLE CEILING AVAILABLE. SEE TELE/DATA RISER DIAGRAM FOR OUTLET AND CABLE DESCRIPTION
- DATA OUTLET(S) @ 18" AFF. U.N.O. WITH 3/4" RACEWAY TERMINATED ABOVE NEAREST ACCESSIBLE CEILING OR TO DATA EQUIPMENT RACK IF NO ACCESSIBLE CEILING AVAILABLE. SEE TELE/DATA RISER DIAGRAM FOR OUTLET AND CABLE DESCRIPTION

TELECOMMUNICATIONS (CONTINUED)

- COMBINATION TELEPHONE/DATA OUTLET(S) @ 18" AFF. U.N.O. WITH 1" RACEWAY TERMINATED ABOVE NEAREST ACCESSIBLE CEILING OR TO TELE/DATA TERMINAL AREA IF NO ACCESSIBLE CEILING AVAILABLE. SEE TELE/DATA RISER DIAGRAM FOR OUTLET AND CABLE DESCRIPTION
- W WALL MTD. TELEPHONE OUTLET WITH 3/4" RACEWAY TERMINATED ABOVE NEAREST ACCESSIBLE CEILING OR TO TELEPHONE TERMINAL BOARD IF NO ACCESSIBLE CEILING AVAILABLE. SEE TELE/DATA RISER DIAGRAM FOR OUTLET AND CABLE DESCRIPTION
- (x)T INDICATES NUMBER OF TELEPHONE OUTLET(S) AND ASSOCIATED CABLING
- (x)D INDICATES NUMBER OF DATA OUTLET(S) AND ASSOCIATED CABLING
- (x)TF INDICATES NUMBER OF TELEPHONE OUTLETS AND ASSOCIATED CABLING WITH 1 OUTLET AND CABLE DEDICATED FOR FAX

SINGLE LINE SYMBOLS

- SWITCH
- BREAKER
- FUSE
- TRANSFORMER
- CAPACITOR
- GROUND
- CONTACT (NORMALLY OPEN)
- CONTACT (NORMALLY CLOSED)
- AUTOMATIC TRANSFER SWITCH
- MANUAL DOUBLE THROW SWITCH
- CURRENT TRANSFORMER
- INDICATES NEW ELECTRICAL EQUIPMENT
- C INDICATES NEW CONTROL WIRING AND CONDUIT
- EQUIPMENT OUTLINE

MISCELLANEOUS

- BRANCH CIRCUIT WIRING CONCEALED ABOVE CEILINGS, SURFACE MOUNTED ON WALLS
- BRANCH CIRCUIT WIRING – #10 AWG
- BRANCH CIRCUIT WIRING – UNDER FLOOR
- HOME RUN BACK TO PANEL
- CONDUIT TURNED DOWN
- CONDUIT TURNED UP
- LV LOW VOLTAGE WIRING AND CONDUIT
- CT–X CABLE TRAY ("X" DENOTES WIDTH)
- INDICATES CONTINUATION OF LINE

FIRE ALARM

- FACP FIRE ALARM CONTROL PANEL WITH BATTERY BACKUP
- F FIRE ALARM PULL STATION

FIRE ALARM (CONTINUED)

- F FIRE ALARM STROBE – WALL MOUNTED
- F FIRE ALARM AUDIBLE/STROBE – WM
- F FIRE ALARM HORN/STROBE – WM
- S SMOKE DETECTOR
- H HEAT DETECTOR CEILING MOUNTED
- D DUCT DETECTOR – PROVIDED BY EC, INSTALLED BY MC AND CONNECTED BY EC

DENOTATIONS & ABBREVIATIONS

AFF	ABOVE FINISHED FLOOR
C	CEILING MOUNTED
E	EMERGENCY
EC	ELECTRICAL CONTRACTOR
EPO	EMERGENCY POWER OFF
EXP	EXPLOSION PROOF
F	FIRE ALARM
FF	FLUSH FLOOR MOUNTED
FL	FLUORESCENT
FO	FIBER OPTIC
FSS	FUSED SAFETY SWITCH
G	GROUND FAULT INTERRUPTER
GC	GENERAL CONTRACTOR
HOA	HAND–OFF AUTO
I	INFRARED
ICD	INCANDESCENT
IG	ISOLATED GROUND
K	KEY
LV	LOW VOLTAGE
M	MOTOR
MC	MECHANICAL CONTRACTOR
NE	NORMAL/EMERGENCY
NFSS	NON–FUSED SAFETY SWITCH
PA	PAGING SYSTEM
PLC	PLUMBING CONTRACTOR
REL	RELOCATE
RED	RELOCATED
SL	SINGLE LINE
SS	SURGE SUPPRESSION
T	TELEPHONE
TL	TWIST LOCK

DENOTATIONS & ABBREVIATIONS (CONT.)

TP	TAMPER PROOF
UE	UNDERGROUND ELECTRIC
UF	UNDERGROUND FIBER
UT	UNDERGROUND TELEPHONE
W	WALL MOUNTED
WG	WIRE GUARD
WP	WEATHERPROOF
WPG	WEATHERPROOF/GROUND FAULT INTERRUPTER
WT	WATER TIGHT

GENERAL PROJECT NOTES:

G1. UNLESS OTHERWISE NOTED, PROVIDE ALL EQUIPMENT SHOWN ON THE PLANS. THE ELECTRICAL CONTRACTOR SHALL COORDINATE ALL SYMBOLS SHOWN ON THE PLANS WITH THE SYMBOL LIST. IT SHALL BE THE RESPONSIBILITY OF THE CONTRACTOR TO VERIFY THE INTENT OF ANY SYMBOL THAT IS SHOWN ON THE PLANS AND NOT INDICATED ON THE SYMBOL LIST WITH THE ENGINEER PRIOR TO BID.

G2. COORDINATE THE FINAL LOCATIONS OF ALL LIGHT FIXTURES WITH THE ARCHITECT'S REFLECTED CEILING PLANS. REPORT ANY DISCREPANCIES TO THE ARCHITECT PRIOR TO INSTALLATION.

G3. THE CONTRACTOR SHALL VERIFY THE LOCATION OF ALL UNDERGROUND UTILITIES WITHIN THE CONSTRUCTION AREA THREE (3) WORKING DAYS NOTICE BEFORE COMMENCE DIGGING. NOTIFY THE LOCAL OR STATE AUTHORITY HAVING JURISDICTION AND WAIT THE REQUIRED TIME BEFORE COMMENCING TO DIG.

G4. THE CONTRACTOR SHALL COORDINATE CONDUIT RUNS, CABLE TRAY, LIGHTING FIXTURES AND OTHER EQUIPMENT LOCATIONS WITH THE OTHER TRADE CONTRACTORS TO AVOID CONFLICTS.

G5. WHERE VOLTAGES AND FREQUENCIES ON THE DRAWINGS AND IN THE SPECIFICATIONS DIFFER FROM THE LOCAL ONES, ALL WORK SHALL BE PERFORMED USING THE LOCAL VOLTAGES AND FREQUENCIES.

G6. THE MINIMUM WIRE SIZE ON THE PROJECT SHALL BE 4mm2. THE MINIMUM CONDUIT SIZE SHALL BE 20mm. THE MINIMUM BREAKER SIZE SHALL BE 20 AMPS.

G7. THE CONTRACTOR SHALL PUT A MAXIMUM OF 6 DUPLEX SOCKETS ON A 20A SINGLE POLE CIRCUIT.

G8. WHERE THE 1010 SCOPE REVIEW, 1015 TECHNICAL REVIEW, DRAWINGS, AND SPECIFICATIONS DIFFER FROM AMERICAN CODES OR STANDARDS THE 1010, 1015, DRAWINGS, AND SPECIFICATIONS SHALL RULE.

G9. WORK FOR THE AMMUNITION SUPPLY POINT SHALL BE DONE IN ACCORDANCE WITH DEPARTMENT OF DEFENSE STANDARD DOD 6055.9–STD.

G10. ALL CONDUIT AND DEVICES SHALL BE SURFACE MOUNTED UNLESS OTHERWISE INDICATED.

US Army Corps of Engineers
Afghanistan Engineer District

SYMBOL	DESCRIPTION	DATE	APP

DESIGNED BY: JRG
DWN BY: JRG
CHK BY: JRG
DATE: 09-30-09
SUBMITTED BY: BAKER
FILE NO.: ANPSDE-000XXX

Michael Baker Jr, Inc
A unit of Michael Baker Corporation
Airside Business Park
100 Airside Drive
Moon Township, PA 15108
www.mbakercorp.com

AFGHAN NATIONAL POLICE
STANDARD DESIGN
WELL HOUSE

ELECTRICAL SYMBOLS AND ABBREVIATIONS

SHEET REFERENCE NUMBER:
E0

100% SUBMISSION

GENERAL NOTES:

1. REFER TO DRAWING #E0 FOR THE ELECTRICAL SYMBOLS LIST.
2. EXIT SIGNS SHALL BE WIRED AHEAD OF ANY LOCAL SWITCHING ON CIRCUITS.
3. REFER TO DRAWING #E3 FOR THE LIGHTING FIXTURE SCHEDULE.
4. REFER TO DRAWING #E2 FOR THE POWER RISER.
5. REFER TO DRAWING #E4 FOR PANEL SCHEDULES.
6. LIGHT FIXTURES INDICATED AS EMERGENCY SHALL BE PROVIDED WITH A BATTERY BACKUP BALLAST.

NUMBERED NOTE:

1. REFER TO RISER DIAGRAM FOR FEEDER SIZE.
2. WELL WATER PUMP.
3. PANEL P1
4. 3 4mm + 1 4mm GND. IN 20mm C.
5. PROVIDE POWER CONNECTION TO ELECTRIC UNIT HEATER #2. SEE DRAWINGS #E5 AND #M1 FOR MORE INFORMATION.
6. PROVIDE POWER CONNECTION TO EXHAUST FAN. SEE DRAWINGS #E5 AND #M1 FOR MORE INFORMATION.
7. PROVIDE POWER CONNECTION TO CHLORINATION UNIT. COORDINATE FINAL LOCATION IN THE FIELD.

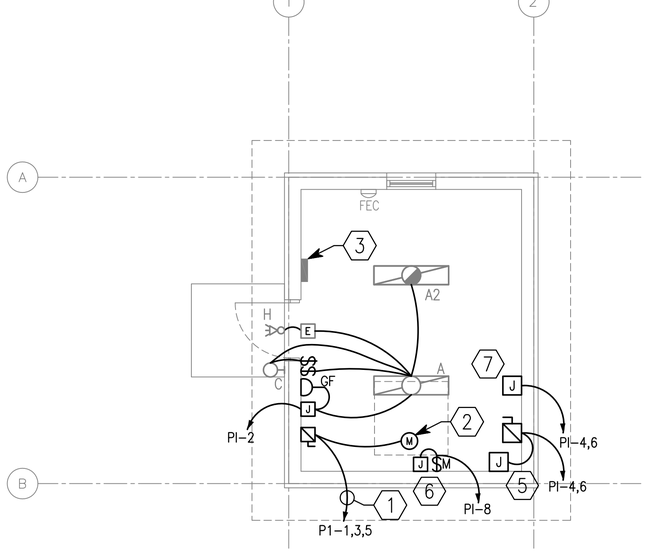

1 / E1 E1 LIGHTING AND POWER PLAN

SCALE: 1:50

N

UNLESS OTHERWISE NOTED, LINEAR DIMENSIONS SHOWN ARE IN MILLIMETERS (MM)

1 0 1 2 3 4

1:50

US Army Corps of Engineers

Afghanistan Engineer District

SYMBOL	DESCRIPTION	DATE	APP.

DESIGNED BY:	DATE:
JRG	09-30-09
DWN BY:	SUBMITTED BY:
JRG	BAKER
CHK BY:	FILE NO.:
JRG	ANPSDE-101XXX

Michael Baker Jr., Inc.
A unit of Michael Baker Corporation
Airside Business Park
100 Airside Drive
Moon Township, PA 15108
www.mbakercorp.com

AFGHAN NATIONAL POLICE
STANDARD DESIGN
WELL HOUSE

LIGHTING AND POWER PLAN

SHEET REFERENCE NUMBER:

E1

100% SUBMISSION

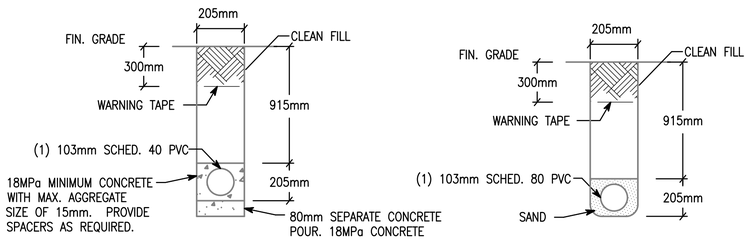

NOTE: PVC CONDUIT SHALL BE DIRECT BURIED SCHEDULE 80 FOR NO TRAFFIC AREAS AND CONCRETE-ENCASED SCHEDULE 40 FOR UNDER ROADWAYS OR TRAFFIC AREAS.

1 E2 | E2 TYPICAL DUCT BANK DETAILS FOR CONDUIT IN SAND OR CONCRETE

SCALE: N.T.S.

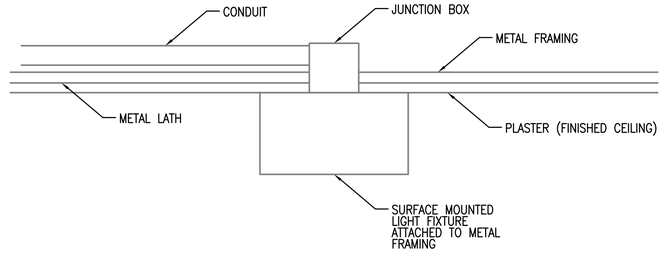

2 E2 | E2 TYPICAL DETAIL FOR SURFACE MOUNTED LIGHT FIXTURES

SCALE: N.T.S.

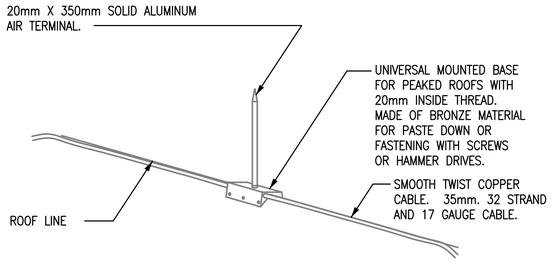

3 E2 | E2 LIGHTNING PROTECTION AIR TERMINAL DETAIL

SCALE: N.T.S.

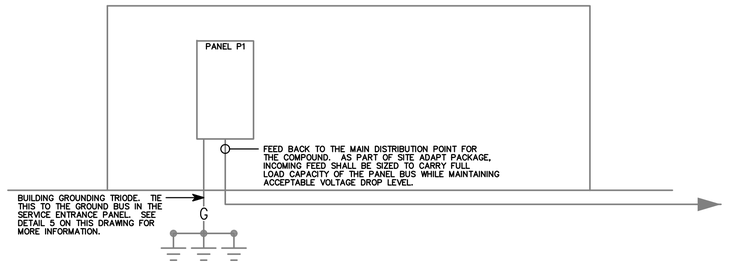

4 E2 | E2 WELLHOUSE RISER DIAGRAM

SCALE: N.T.S.

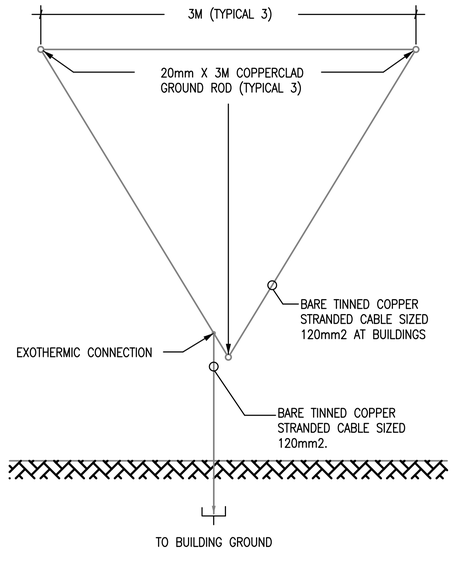

5 E2 | E2 GROUND TRIPOD SYSTEM DETAIL - PLAN

SCALE: N.T.S.

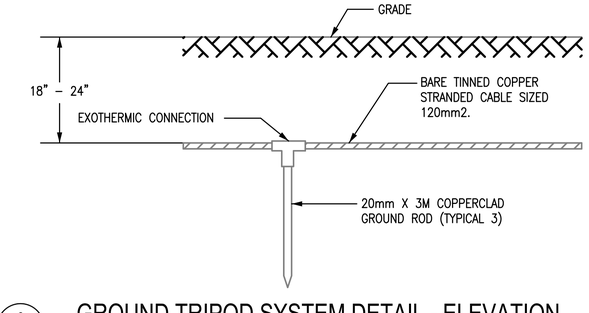

6 E2 | E2 GROUND TRIPOD SYSTEM DETAIL - ELEVATION

SCALE: N.T.S.

US Army Corps of Engineers
Afghanistan Engineer District

SYMBOL	DESCRIPTION	DATE	APR

DESIGNED BY:	DATE:
JRG	09-30-09
DWN BY:	SUBMITTED BY:
JRG	BAKER
CHK BY:	FILE NO.:
JRG	ANPSDE-502XXX

Michael Baker Jr., Inc
A unit of Michael Baker Corporation
Airside Business Park
100 Airside Drive
Moon Township, PA 15108
www.mbakercorp.com

AFGHAN NATIONAL POLICE
STANDARD DESIGN
WELL HOUSE

DETAILS

SHEET REFERENCE NUMBER:
E2

100% SUBMISSION

LIGHTING FIXTURE SCHEDULE

FIXTURE MARK	STYLE NUMBER AND TYPE	NUMBER AND TYPE OF LAMPS	VOLTAGE	MOUNTING	NOTES
A	PARABOLIC SURFACE/PENDANT MOUNTED 300MM X 1200MM FLUORESCENT FIXTURE WITH ELECTRONIC BALLAST	(2) 32W 3500K	220V – 1ø 50HZ	PENDANT MOUNTED FROM SLOPED CEILINGS	FURNISHED WITH ELECTRONIC BALLAST. PARABOLIC LOUVER SHALL BE SPECULAR LENS IRADESCENCE TYPE.
A2	SAME AS FIXTURE 'A' WITH EMERGENCY BALLAST	(2) 32W 3500K	220V – 1ø 50HZ	PENDANT MOUNTED FROM SLOPED CEILINGS	FURNISHED WITH ELECTRONIC BALLAST. PARABOLIC LOUVER SHALL BE SPECULAR LENS IRADESCENCE TYPE. EMERGENCY BALLAST SELF TEST.
C	INCANDESCENT ONE PIECE W/ APPROVED LENS STABILIZED HIGH IMPACT POLY CARBONATE.	(1) A19 – 100W INCANDESCENT	220V – 1ø 50HZ	WALL MOUNTED ABOVE EXTERIOR DOORS	
H	REMOTE HEAD EXTERIOR LIGHT HEAD POWERED FROM EXIT SIGN BATTERY– 12V DOUBLE HEAD CORROSION RESISTANT WITH UL34 WEATHERPROOF CONSTRUCTION	(2) 12W/12V HALOGEN LAMP	12V – 1ø 50HZ	EXTERIOR WALL MOUNTED AT TOP OF DOOR HEIGHT	
E	UNIVERSAL MOUNT ENGINEER GRADE THERMOPLASTIC HOUSING EXIT SIGN WITH LED LAMPS, RED LETTERS 6" IN HEIGHT WITH ARROWS AS INDICATED, WITH 12V CADMIUM BATTERY WITH REMOTE HEAD CAPABILITY	LED LAMPS	220V – 1ø 50HZ	UNIVERSAL MOUNTING	

FIXTURE MARK 'A'

PARABOLIC SURFACE/PENDANT MOUNTED 300MM x 1200MM FLUORESCET FIXTURE WITH ELECTRONIC BALLAST.

FIXTURE MARK 'A2':
SAME FIXTURE AS 'A' WITH EMERGENCY BALLAST.

FIXTURE MARK 'C'

INCANDESCENT ONE PIECE WITH APPROVED LENS, STABILIZED HIGH IMPACT POLY CARBONATE

FIXTURE MARK 'H'

REMOTE HEAD EXTERIOR LIGHT HEAD POWERED FROM EXIT SIGN BATTERY– 12V DOUBLE HEAD CORROSION RESISTANT WITH UL34 WEATHERPROOF CONSTRUCTION

FIXTURE MARK 'E'

UNIVERSAL MOUNT ENGINEER GRADE THERMOPLASTIC HOUSING EXIT SIGN WITH LED LAMPS, RED LETTERS 6" IN HEIGHT WITH ARROWS AS INDICATED, WITH 12V CADMIUM BATTERY

US Army Corps of Engineers
Afghanistan Engineer District

SYMBOL	DESCRIPTION	DATE	APP.

DESIGNED BY:	DATE:
JRG	09-30-09
DWN BY:	SUBMITTED BY:
JRG	BAKER
CHK BY:	FILE NO.:
JRG	ANPSDE-603XXX

Michael Baker Jr., Inc
A unit of Michael Baker Corporation
Airside Business Park
100 Airside Drive
Moon Township, PA 15108
www.mbakercorp.com

AFGHAN NATIONAL POLICE
STANDARD DESIGN
WELL HOUSE

LIGHT FIXTURE SCHEDULE

SHEET REFERENCE NUMBER:
E3

100% SUBMISSION

PANELBOARD P1 SURFACE MOUNTED ASYM. A.I.C. MIN.

AMP. MAIN LUGS (OR) 100 AMP. MAIN BREAKER W/ 100 AMP. TRIP

CIRCUIT BREAKER TYPE 380/220 VOLTS 3 PHASE 4 WIRE 50 HZ 100 AMP. BUS

CKT. NO.	TRIP AMPS	NO. POLES	WIRE MM ²	GND MM²	CONDUIT MM	LOAD SERVED	LOAD-V.A. AØ	LOAD-V.A. BØ	LOAD-V.A. CØ	LOAD-V.A. AØ	LOAD-V.A. BØ	LOAD-V.A. CØ	LOAD SERVED	CONDUIT MM	GND MM²	WIRE MM²	NO. POLES	TRIP AMPS	CKT. NO.
1							3.7			0.5			LIGHTING AND RECEPTACLES	20	4.0	4.0	1	20	2
3	20	3	4.0	4.0	20	WELL PUMP		3.7			1.3		ELECTRIC UNIT HEATER	20	4.0	4.0	2	20	4
5									3.7			1.3							6
7	20	1				CHLORINATION UNIT	2.2			0.2			EXHAUST FAN	20	4.0	4.0	1	20	8
9	20	1				SPARE							SPARE				1	20	10
11	20	1				SPARE							SPARE				1	20	12
							5.9	3.7	3.7	0.5	1.3	1.3							

TOTAL CONN. LOAD PER PHASE (KVA): AØ 4.2 BØ 5.0 CØ 5.0

TOTAL CONN. LOAD 16.4 KVA. 70 % DEMAND = ESTIMATED DEMAND LOAD 11.5 SUPPLIED FROM MAIN SWITCHGEAR DISTRIBUTION

• MAIN BREAKER SHALL BE 3P EARTH GROUND TYPE

US Army Corps of Engineers

Afghanistan Engineer District

SYMBOL	DESCRIPTION	DATE	APP.

DESIGNED BY: JRG	DATE: 09-30-09
DWN BY: JRG	SUBMITTED BY: BAKER
CHK BY: JRG	FILE NO.: ANPSDE-604XXX

Michael Baker Jr., Inc
A unit of Michael Baker Corporation
Airside Business Park
100 Airside Drive
Moon Township, PA 15108
www.mbakercorp.com

AFGHAN NATIONAL POLICE
STANDARD DESIGN
WELL HOUSE

PANEL SCHEDULES AND RISER DIAGRAM

SHEET REFERENCE NUMBER:

E4

100% SUBMISSION