Appendix A

Standard Design Drawings

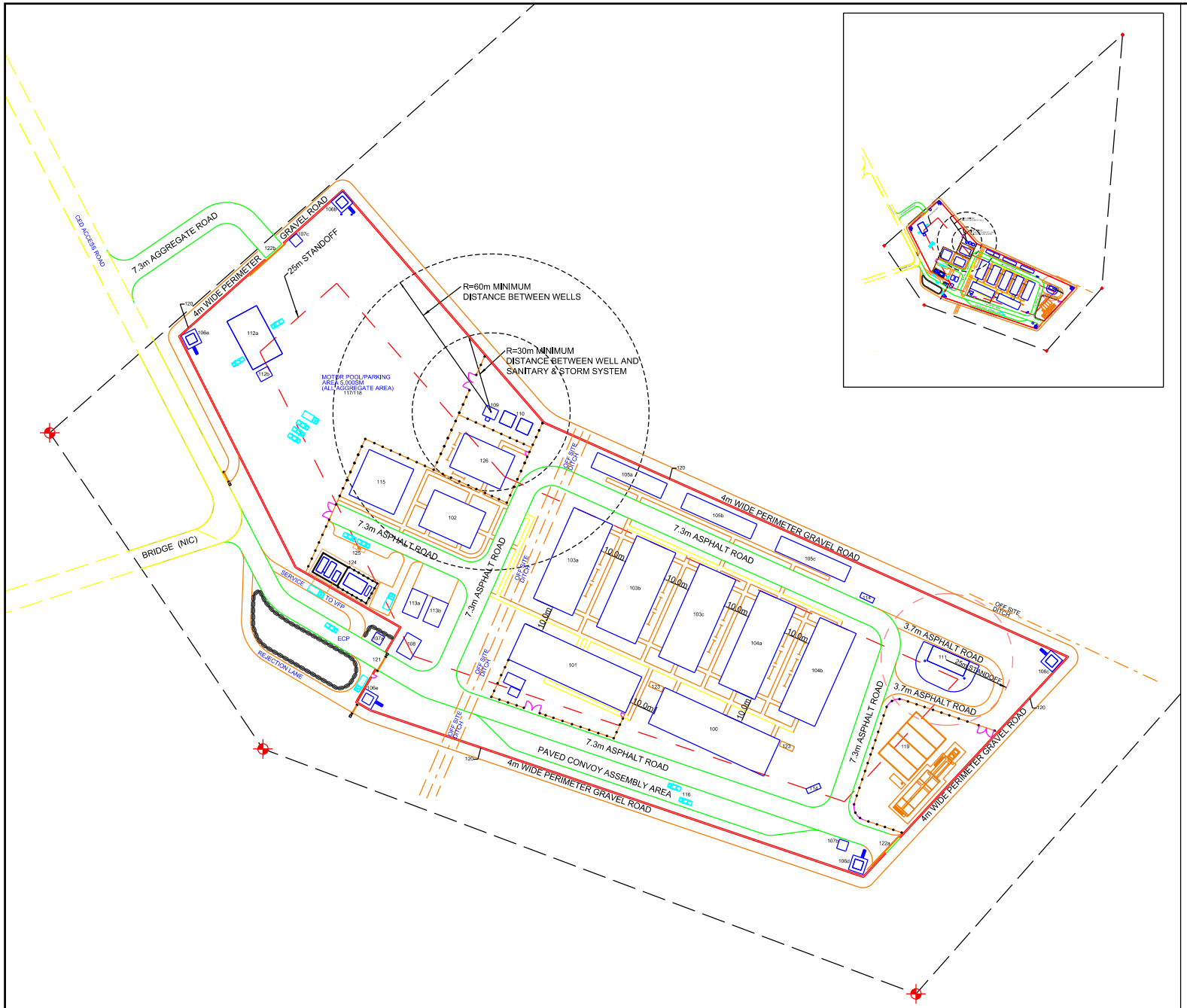

FIELD VERIFY
NOT TO SCALE

ANCOP PATROL BATTALION

CONCEPT SITE PLAN

NEW FACILITIES

100	ADMINISTRATION BLDG
101	DINING FACILITY BUILDING (W/ WOOD STOVE ANNEX)
102	TRAINING BLDG
103a-c	OPEN BAY BARRACKS
104a-b	SENIOR BARRACKS
105a-c	LATRINES
106a-e	GUARD TOWERS
107a-c	GUARD SHACKS
108	GUARD HOUSE
109	WELL HOUSE
110	WATER TANK(S)
111	SECURE STORAGE BUILDING (ASP)
112a	VEHICLE MAINTENANCE BLDG
112b	PETROLEUM, OIL AND LUBRICANT (POL) BLDG
113a-b	WAREHOUSE
114	TRASH COLLECTION POINT
115	SMALL ARM MAINTENANCE BLDG
116	CONVOY ASSEMBLY AREA
117	CAR PARKING (100 CARS TOTAL @ 4m x 5.5m each)
118	MOTOR POOL
	TRUCK PARKING 40 @ 4m x11m each
	TRAILER PARKING 10 @ 4m x 11m each
	LTV PARKING 28 @ 4m x 5.5m each
119	WASTEWATER TREATMENT PLANT
120	FORCE PROTECTION WALL
121	PRIMARY ENTRY CONTROL POINT (ECP)
122a-b	SECONDARY ENTRY CONTROL POINT / ESCAPE HATCH
123	FLAG POLES
124	GENERATOR AND FUEL STORAGE CANOPY
125	FUEL POINT
126	FEMALE BARRACKS

NOT FOR CONSTRUCTION

LEGEND

- CONCRETE BARRIER WALL
- GATE
- CHAIN LINK FENCE
- CAR PARKING
- TRUCK PARKING
- TRAILER PARKING
- PATH
- STAND OFF
- FORCE PROTECTION WALL
- LICENSE FOR CONSTRUCTION LINE
- UNDERGROUND
- CLOTHES LINE

SCALE: AS SHOWN

DATE: NOV 2011

FIGURE

AFGHAN NATIONAL SECURITY FORCE
Comprehensive Plan for Facilities Development

ANCOP PATROL BATTALION
CONCEPT SITE PLAN

DESIGN :
DRAWN :
CHECKED:
IN CHARGE:
PROJECT/TASK

STANDARD BUILDING DESIGNS

ADMINISTRATION BUILDING TYPE 2 (1446 GSM)

SHEET INDEX

G1	COVER SHEET
S1	GENERAL NOTES & DESIGN CRITERIA
S2	DESIGN CRITERIA & SCHEDULES
S3	SCHEDULES
S4	FOUNDATION PLAN
S5	SECOND FLOOR FRAMING PLAN
S6	ROOF FRAMING PLAN
S7	FOUNDATION SECTIONS & DETAILS
S8	FLOOR & ROOF FRAMING SECTIONS & DETAILS
S9	FLOOR & ROOF FRAMING SECTIONS & DETAILS
S10	TYPICAL DETAILS
A1	FIRST FLOOR PLAN
A2	SECOND FLOOR PLAN
A3	ROOF PLAN
A4	EXTERIOR ELEVATIONS
A5	EXTERIOR ELEVATIONS
A6	BUILDING & WALL SECTIONS
A7	STAIR PLAN & SECTION
A8	STAIR DETAILS
A9	DOOR, WINDOW & FINISH TYPES & DETAILS
A10	LATRINE AND SHOWER DETAILS
A11	CASEWORK ELEVATIONS, SECTIONS & DETAILS
A12	SECTION DETAILS
A13	MISCELLANEOUS DETAILS

SHEET INDEX

P1	FIRST FLOOR PLAN - PLUMBING
P2	SECOND FLOOR PLAN - PLUMBING
P3	DRAINAGE ISOMETRIC
P4	TYPICAL PLUMBING SECTIONS, PLUMBING DETAILS PLUMBING NOTES & PLUMBING SCHEDULE
M1	FIRST FLOOR PLAN - HVAC
M2	SECOND FLOOR PLAN - HVAC
M3	HVAC DETAILS
E0	ELECTRICAL SYMBOLS AND ABBREVIATIONS
E1	FIRST FLOOR LIGHTING PLAN
E2	SECOND FLOOR LIGHTING PLAN
E3	FIRST FLOOR POWER AND SYSTEMS PLAN
E4	SECOND FLOOR POWER AND SYSTEMS PLAN
E5	ROOF LIGHTNING PROTECTION PLAN
E6	DETAILS
E7	LIGHT FIXTURE SCHEDULE
E8	PANEL SCHEDULES AND RISER DIAGRAM

US Army Corps of Engineers
Afghanistan Engineer District

SYMBOL	DESCRIPTION	DATE	APR

DESIGNED BY: JDS
DATE: 09-30-09
DWN BY: JDS
SUBMITTED BY: BAKER
CHK BY: JDS
FILE NO.: ANPSDG-001XXX

Michael Baker Jr., Inc.
A unit of Michael Baker Corporation
Airside Business Park
100 Airside Drive
Moon Township PA 15108
www.mbakercorp.com

STANDARD DESIGN
ADMINISTRATION BUILDING – 2-STORY (1446 GSM)
WOOD FIRED HEAT OPTION
COVER SHEET

SHEET REFERENCE NUMBER:
G1

100% SUBMISSION

STRUCTURAL ABBREVIATIONS:

ACI	AMERICAN CONCRETE INSTITUTE
AISC	AMERICAN INSTITUTE OF STEEL CONSTRUCTION
ASTM	AMERICAN SOCIETY FOR TESTING AND MATERIALS
ARCH	ARCHITECTURAL
B	BOTTOM
BLDG	BUILDING
BOTT	BOTTOM
℄	CENTER LINE
CFMRF	COLD FORM METAL ROOF FRAME
CFMF	COLD FORM METAL FRAME
CFS	COLD FORMED STEEL
CIP	CAST-IN-PLACE
CIPL	CAST-IN-PLACE LINTEL
CJ	CONTROL JOINT
CLR	CLEAR
CMU	CONCRETE MASONRY UNIT
COEFF	COEFFICIENT
COL	COLUMN
CONC	CONCRETE
CONT	CONTINUOUS
COORD	COORDINATE
CSJ	CONSTRUCTION JOINT
CTJ	CONTROL JOINT
DIA	DIAMETER
DIAG	DIAGONAL
DIM	DIMENSION
DWG	DRAWING
DWL	DOWEL
EA	EACH
EF	EACH FACE
ELEC	ELECTRICAL
ELEV	ELEVATION
EMBED	EMBEDMENT
EQUIV	EQUIVALENT
ETC	ET CETERA
EW	EACH WAY
EXP	EXPANSION
EXT	EXTERIOR
FTG	FOOTING
GA	GAUGE
HORIZ	HORIZONTAL
HRS	HOURS
IBC	INTERNATIONAL BUILDING CODE
INFO	INFORMATION
INT	INTERIOR
Kg	KILOGRAM
Km	KILOMETER
kPa	KILOPASCAL
L#	ANGLE (# INDICATES SIZE)
LONG	LONGITUDINAL
LLV	LONG LEG VERTICAL
M	METER
MAX	MAXIMUM
MBM	METAL BUILDING MANUFACTURER
MECH	MECHANICAL
MFG	MANUFACTURER
MID	MIDDLE
MIN	MINIMUM
MISC	MISCELLANEOUS
MM	MILLIMETER
MPa	MEGAPASCAL
MTL	METAL
MWFRS	MAIN WIND FORCE RESISTING SYSTEM
N	NEWTON
N	NORTH
N/A	NOT APPLICABLE
#	NUMBER SYMBOL FOR REBAR SIZE
NTS	NOT TO SCALE
O.C.	ON CENTER
OPNG	OPENING
ℙ or PL	PLATE
PRE-ENG	PRE-ENGINEERED
REINF	REINFORCED
REQ'D	REQUIRED
SIM	SIMILAR
SPECS	SPECIFICATIONS
STD	STANDARD
STRUCT	STRUCTURAL
SW	SHEAR WALL
T	TOP
T/	TOP OF
T/ELEV	TOP ELEVATION
T&B	TOP AND BOTTOM
THK	THICK
TYP	TYPICAL
UFC	UNIFIED FACILITIES CRITERIA
UON	UNLESS OTHERWISE NOTED
VERT	VERTICAL
W	WIDTH
W/	WITH

GENERAL NOTES

1.0 THIS PROJECT HAS BEEN DESIGNED FOR THE WEIGHTS AND MATERIALS INDICATED ON THE SHEETS AND FOR THE LIVE LOADS INDICATED IN THE DESIGN DATA. IT IS THE CONTRACTOR'S RESPONSIBILITY TO DETERMINE ALLOWABLE CONSTRUCTION LOADS AND TO PROVIDE PROPER DESIGN AND CONSTRUCTION OF FALSEWORK, FORMWORK, STAGING, BRACING, SHEETING AND SHORING, ETC.

1.1 COORDINATE THESE SHEETS WITH THE ARCHITECTURAL, MECHANICAL, ELECTRICAL, PLUMBING, AND CIVIL SHEETS. ALL DIMENSIONS SHOWN ON THE SHEETS ARE MILLIMETERS UNLESS NOTED OTHERWISE.

1.2 THE CONTRACTOR SHALL VERIFY AND COORDINATE ALL FLOOR AND ROOF OPENING SIZES AND LOCATIONS, EQUIPMENT PAD SIZES AND LOCATIONS, ANCHOR BOLT LAYOUTS, ETC WITH EQUIPMENT SELECTED. THE CONTRACTOR SHALL MAKE ANY REQUIRED MODIFICATIONS AT NO ADDITIONAL COST.

1.3 THE CONTRACTOR SHALL REFER TO THE ARCHITECTURAL, MECHANICAL, ELECTRICAL AND PLUMBING SHEETS FOR SLEEVES, CURBS, INSERTS OR OPENINGS, ETC. NOT HEREIN INDICATED.

1.4 SLAB OPENINGS SMALLER THAN 250mm DIA TO BE CORE DRILLED IN FIELD UON. SEE MECHANICAL, ELECTRICAL AND PLUMBING SHEETS FOR LOCATIONS OF THESE OPENINGS.

1.5 WORK NOT INCLUDED ON THE SHEETS BUT IMPLIED TO BE SIMILAR TO THAT SHOWN AT CORRESPONDING PLACES ELSEWHERE ON THE SHEETS SHALL BE REPEATED.

1.6 IN CASE OF CONFLICT BETWEEN THE NOTES, DETAILS AND SPECIFICATIONS THE MOST RIGID REQUIREMENTS SHALL GOVERN.

1.7 SEE ARCHITECTURAL SHEETS FOR LOCATIONS OF MASONRY AND DRYWALL NON-LOAD BEARING PARTITIONS. PROVIDE COMPRESSIBLE FIRESAFING AT TOP OF WALL AS REQUIRED BY ARCHITECTURAL SHEETS.

1.8 COORDINATE FINISHED FLOOR DATUM ELEVATION 0.0m WITH THE CIVIL SHEETS.

2.0 FOUNDATION NOTES

2.1 THE GEOTECHNICAL ANALYSIS FOR THIS PROJECT IS THE RESPONSIBILITY OF THE CONTRACTOR AWARDED THE WORK. DESIGN VALUES USED IN THE STRUCTURAL ANALYSIS OF THE BUILDINGS HEREIN INDICATED HAVE BEEN ASSUMED AND SHALL BE CONFIRMED AND VERIFIED AS PART OF THE GEOTECHNICAL INVESTIGATION. VALUES WHICH DO NOT MEET THE REQUIREMENTS INDICATED ON THE BASIS OF DESIGN SHEET SHALL BE IMMEDIATELY BROUGHT TO THE ATTENTION OF THE CONTRACTING OFFICER FOR CONSIDERATION AND DETERMINATION ON THE NEXT APPROPRIATE COURSE OF ACTION.

2.2 SEE THE SPECIFICATION FOR ADDITIONAL REQUIREMENTS TO THOSE OUTLINED IN THE GEOTECHNICAL INVESTIGATION FOR EXCAVATION AND PREPARATION OF THE FOUNDATION AND THE SLAB ON GRADE SUBGRADE INCLUDING COMPACTION PROCEDURES.

2.3 EXCAVATIONS FOR FOOTINGS SHALL HAVE THE SIDES AND BOTTOMS TEMPORARILY LINED WITH 0.25mm POLYETHYLENE IF PLACEMENT OF CONCRETE DOES NOT OCCUR WITHIN 24 HRS OF THE EXCAVATION OF THE FOOTING.

2.4 FOUNDATION CONDITIONS NOTED DURING CONSTRUCTION WHICH DIFFER FROM THOSE DESCRIBED IN THE GEOTECHNICAL REPORT SHALL BE REPORTED TO THE GENERAL CONTRACTOR BEFORE FURTHER CONSTRUCTION IS ATTEMPTED. SEE PROJECT SPECIFICATIONS.

2.5 NO FOOTINGS OR SLABS SHALL BE POURED INTO OR AGAINST SUBGRADE CONTAINING FREE WATER, FROST, ICE OR LOOSE MATERIAL. FROST DEPTH ASSUMED TO BE 800MM

2.6 ALL SLAB-ON-GRADE, TRENCH BOTTOMS AND OTHER ON-GRADE INTERIOR HORIZONTAL SURFACES SHALL BE PLACED OVER A 0.25mm VAPOR RETARDER OVER A 100mm #57 STONE WATER BARRIER PLACED ON SUBGRADE PROPERLY PREPARED IN ACCORDANCE WITH THE CONTRACT SPECIFICATIONS. (UON)

2.7 SEE PLUMBING, ELECTRICAL & CIVIL SHEETS FOR REQUIRED UNDERSLAB UTILITIES.

2.8 SEE ARCHITECTURAL SHEETS FOR ALL WATERPROOFING DETAILS AND MATERIALS.

2.9 IF UNDERMINING OF FOOTINGS OCCURS, FILL VOIDS WITH 15MPa CONCRETE. DO NOT ATTEMPT TO REPLACE AND RECOMPACT SOIL.

3.0 CONCRETE

3.1 CONCRETE SHALL HAVE THE UNIT WEIGHT AND THE MINIMUM COMPRESSIVE STRENGTHS (f'c) AT 28 DAYS AS SHOWN IN THE CONCRETE MATERIALS SCHEDULE ON SHEET S3. SEE SPECIFICATIONS FOR ADDITIONAL INFORMATION. ENTRAIN AIR TO PRODUCE TOTAL AIR CONTENT ACCORDING TO THE SPECIFICATIONS FOR CONCRETE EXPOSED TO FREEZING TEMPERATURES (EXTERIOR FOOTINGS, SLAB TURNDOWNS, EXTERIOR SLABS AND SLABS-ON-GRADE, EXTERIOR RETAINING WALLS, AND EXTERIOR GRADE BEAMS.)

3.2 NO CALCIUM CHLORIDE SHALL BE USED IN ANY CONCRETE.

3.3 MIXING, TRANSPORTING AND PLACING OF CONCRETE SHALL CONFORM TO ACI 301M-05.

3.4 ALL CONCRETE WORK SHALL CONFORM TO THE REQUIREMENTS OF THE AMERICAN CONCRETE INSTITUTE (ACI) 318M MANUAL (metric), "BUILDING CODE REQUIREMENTS FOR REINFORCED CONCRETE", AND REQUIREMENTS OUTLINED IN THE CONTRACT SPECIFICATIONS. WHEN THERE IS A CONFLICT BETWEEN ACI AND THE SPECIFICATIONS, THE MORE STRINGENT SHALL GOVERN.

3.5 CHAMFER ALL EXPOSED EXTERNAL CORNERS OF CONCRETE WITH 20mm x45 DEGREE CHAMFER UON.

3.6 CONCRETE REINFORCEMENT BARS SHALL CONFORM TO ASTM A615M-96a, GRADE 420 MPa, REINFORCING BARS SHALL NOT BE TACK WELDED, WELDED, HEATED OR CUT, UNLESS INDICATED ON THE CONTRACT DOCUMENTS. ALL LAP SPLICES SHALL BE CLASS "B" UON.

3.7 HORIZONTAL FOOTING AND HORIZONTAL WALL REINFORCEMENT SHALL BE CONTINUOUS AND SHALL HAVE 90 DEGREE BENDS AND EXTENSIONS, OR CORNER BARS OF EQUIVALENT SIZE LAPPED WITH A CLASS B TENSION SPLICE AT CORNERS AND INTERSECTIONS. TOP BAR CRITERIA SHALL APPLY IF 300mm OR MORE OF FRESH CONCRETE IS PLACED BELOW BAR.

3.8 SLABS-ON-GRADE SHALL HAVE CONSTRUCTION JOINTS OR CRACK CONTROL JOINTS AS SHOWN ON THE DRAWINGS. CONSTRUCTION JOINTS CAN BE USED AT CONTROL JOINT LOCATIONS AT CONTRACTORS OPTION. SEE SLAB PLANS & JOINT DETAILS FOR ADDITIONAL INFORMATION. FOR AREAS NOT SHOWN ON DWGS, THE MAXIMUM SPACING OF CONSTRUCTION/ CRACK CONTROL JOINTS SHALL BE 4800mm

3.9 SEE SPECIFICATIONS FOR ALL WATERPROOFING/DAMPPROOFING REQUIREMENT.

3.10 ALL CONCRETE REINFORCEMENT SHALL BE DETAILED, FABRICATED, LABELED, SUPPORTED, AND SPACED IN FORMS AND SECURED IN PLACE IN ACCORDANCE WITH THE PROCEDURES AND REQUIREMENTS OUTLINED IN THE LATEST EDITION OF THE "BUILDING CODE REQUIREMENTS FOR REINFORCED CONCRETE", ACI 318M, AND THE "MANUAL OF STANDARD PRACTICE FOR DETAILING REINFORCED CONCRETE STRUCTURES", ACI 315M, LATEST EDITION.

3.11 SHOP DRAWINGS SHOWING REINFORCING DETAILS, INCLUDING STEEL SIZES, SPACING AND PLACEMENT, SHALL BE SUBMITTED FOR REVIEW PRIOR TO FABRICATION.

3.12 ALL DOWELS SHALL MATCH SIZE AND NUMBER OF MAIN REINFORCING, UNLESS NOTED OTHERWISE ON THE SHEETS.

3.13 ADDITIONAL BARS SHALL BE PROVIDED AROUND ALL FLOOR AND WALL OPENINGS AS SHOWN ON THE SHEETS.

3.14 SEE ARCHITECTURAL SHEETS FOR TYPE AND LOCATION OF ALL FLOOR FINISHES.

3.15 THE CONTRACTOR SHALL COORDINATE ADDITIONAL WALL/SLAB OPENINGS NOT SHOWN ON STRUCTURAL SHEETS. SEE MECHANICAL, ELECTRICAL, PLUMBING AND CIVIL SHEETS.

3.16 UNLESS NOTED OTHERWISE, ALL CURBS SHALL BE REINFORCED WITH AT LEAST (1)-#13 CONTINUOUS AND #13 AT 300mm O.C. DOWELS TO STRUCTURE BELOW.

3.17 THE SUB-CONTRACTOR SHALL VERIFY ALL OPENINGS, PAD SIZES, AND ANCHOR BOLTS WITH EQUIPMENT SELECTED.

3.18 FOR ALL WALLS & PIERS, PROVIDE DOWELS INTO FOOTING AT EACH VERT REINF BAR, UON DOWEL SIZE SHALL BE SAME AS VERT REINF.

3.19 ALL DEFORMED BAR ANCHORS SHALL BE TRS NELSON DIVISION OR EQUAL 15mm DIA (UON) CONFORMING TO ASTM A-496M WITH A MINIMUM TENSILE STRENGTH OF 550 MPa. INSTALL ANCHORS IN ACCORDANCE WITH MANUFACTURERS RECOMMENDATIONS BY AUTOMATIC END WELDING AS INDICATED ON THE DRAWINGS. NO UNAUTHORIZED OR FIELD WELDING SHALL BE MADE WITHOUT AUTHORIZATION FROM THE MANUFACTURER.

3.20 ALL REINFORCING INDICATED TO BE WELDED SHALL BE IN ACCORDANCE WITH ASTM A706M. "LOW ALLOY STEEL DEFORMED BARS FOR CONCRETE REINFORCEMENT". ANY INSTALLATIONS USING MANUFACTURER'S EQUIPMENT SHALL BE PER MANUFACTURER'S RECOMMENDATIONS.

3.21 PROVIDE CONCRETE POUR STOPS OR FORMED AS REQUIRED FOR INSTALLATION OF ALL CONCRETE WORK.

3.22 PROVIDE ADDITIONAL (2)-#13 x 600mm REINFORCING BARS IN SLAB-ON GRADE AT ALL RE-ENTRANT CORNERS. PLACE BARS AT MID-DEPTH OF SLAB WITH A CLEARANCE OF 50mm FROM CORNER UON.

4.0 CONCRETE MASONRY

4.1 MASONRY CONSTRUCTION AND MATERIALS SHALL CONFORM TO ALL REQUIREMENTS OF THESE CONTRACT DOCUMENTS AND THE PROJECT SPECIFICATIONS.

4.2 THE SPECIFIED ULTIMATE COMPRESSIVE STRENGTH OF CONCRETE MASONRY (f'm) ON THE NET AREA IS A MINIMUM OF 10.4 MPa.

4.3 PROVIDE TWO #16 BARS CONTINUOUS IN ALL MASONRY LINTELS UON ON THE SHEETS. BOND BEAM REINFORCING SHALL BE CONTINUOUS AND SPACED AT A MAXIMUM OF 1200mm OC VERTICALLY. ALL BOND BEAMS SHALL BE A MINIMUM OF 200mm IN DEPTH WITH REINFORCING BEING CONTINUOUS AND HAVING STANDARD ACI HOOKS AT EACH END. PROVIDE STANDARD BAR SPLICES AS SPECIFIED.

4.4 FOR WALL REINFORCING SEE "MIN CMU WALL REINFORCING" DETAILS ON SHEET S10. PROVIDE STANDARD BAR SPLICES AS SPECIFIED. ALL VERTICAL REINFORCEMENT EXTENDS FULL HEIGHT OF WALL.

4.5 CMU CELLS THAT REQUIRE VERTICAL REINFORCING BARS AS INDICATED ON THE CONTRACT DRAWINGS AND/OR SPECS SHALL HAVE REINF BARS PLACED IN CENTERS OF CMU CELLS AND CONTINUOUSLY GROUTED UON.

4.6 PROVIDE LADDER TYPE JOINT REINFORCEMENT AT 200mm EXTERIOR, & 400mm INTERIOR ON CENTER MAXIMUM, UON MINIMUM ROD SIZE USED SHALL BE 9 GA. DEFORMED WIRE AND CONFORM TO ASTM A82M, UON.

4.7 PROVIDE CONTROL JOINTS AS INDICATED ON THE ARCHITECTURAL SHEETS.

4.8 GROUT FOR MASONRY SHALL BE NORMAL WEIGHT AND HAVE A MINIMUM COMPRESSIVE STRENGTH OF 25 MPa AT 28 DAYS. GROUT SHALL CONFORM TO ASTM C476M. GROUT LIFTS SHALL NOT EXCEED 1400mm.

4.9 USE MORTAR TYPE S CONFORMING TO ASTM C270M, SEE SPECIFICATIONS.

4.10 CONCRETE MASONRY UNITS SHALL BE NORMAL WEIGHT AND CONFORM TO ASTM C90M.

4.11 ALL CMU CELLS, OPEN CAVITIES, AND AIR SPACES SHALL BE GROUTED TO STOP FRAGMENTS FROM MORTAR BLAST

4.12 BOND BEAM REINFORCING SHALL BE DISCONTINUOUS AT CONTROL JOINTS (UON). MAXIMUM CONTROL JOINT SPACING SHALL BE AS INDICATED ON THE ARCHITECTURAL SHEETS.

4.13 CONTRACTOR SHALL COORDINATE LOCATION OF ALL OPENINGS SEE ARCH, MECH, ELEC, AND PLUMBING SHEETS FOR SIZE AND LOCATION OF OPENINGS.

4.14 MASONRY WALLS SHALL NOT BE BACK FILLED PRIOR TO THE MORTAR AND GROUT ATTAINING THEIR RESPECTIVE MAXIMUM DESIGN STRENGTHS PER SPECIFICATIONS.

5.0 CFMRF - COLD FORM METAL ROOF FRAMING SYSTEM

5.1 CFMF SHALL BE DESIGNED BY CFMF MANUFACTURER'S ENGINEER FOR ALL LOADING PER CODE AND AS INDICATED ON THE SHEETS.

5.2 FOR WIND LOADS, SEE THE DESIGN CRITERIA ON SHEET S2.

5.3 SUBMIT VENDOR'S PUBLISHED LITERATURE, TEST DATA AND INSTALLATION INSTRUCTIONS FOR METAL STUD ASSEMBLY AND ACCESSORIES INCLUDING OTHER DATA AS MAY BE REQUIRED TO CERTIFY COMPLIANCE WITH PERFORMANCE REQUIREMENTS SPECIFIED HEREIN.

5.4 SHOP DRAWINGS AND DESIGN ANALYSIS SHALL BE STAMPED AND APPROVED BY A LICENSED PROFESSIONAL ENGINEER.

5.5 CONNECTIONS AND GAUGE SIZES ARE MINIMUM AND SHALL BE INCREASED AS NECESSARY TO PROVIDE A STRUCTURALLY ADEQUATE SYSTEM. KICKERS MAY BE ADDED TO REDUCE THE STUD HEIGHTS WHERE ACCEPTABLE AND COORDINATED WITH THE ARCHITECTURAL DRAWINGS.

5.6 CRMRF SHALL HAVE THE FOLLOWING MINIMUM PROPERTIES:

STUD/RAFTER/EAVE STRUT/BRACE/BLOCKING:
Fy = 344 MPa
GAUGE = 18
DEPTH = 152.3 mm
WIDTH = 34.8 mm
MOMENT OF INERTIA, Ix = 847×10^3 mm^4
SECTION MODULUS, Sx = 11.2×10^3 mm^3

TRACK:
Fy = 344 MPa
GAUGE = 16
DEPTH = 152.3 mm
WIDTH = 38 mm
MOMENT OF INERTIA, Ix = 1083×10^3 mm^4
SECTION MODULUS, Sx = 13.8×10^3 mm^3

PURLIN/SUBGIRT:
Fy = 393 MPa
GAUGE = 16
MOMENT OF INERTIA (TOP COMPRESSION), Ixt = 23.7×10^3 mm^4
MOMENT OF INERTIA (BOTT COMPRESSION), Ixb = 22.7×10^3 mm^4
SECTION MODULUS (TOP COMPRESSION), Sxt = 1.8×10^3 mm^3
SECTION MODULUS (BOTT COMPRESSION), Sxb = 1.7×10^3 mm^3

STRUCTURAL DESIGN CRITERIA

ALL DESIGNS SHALL CONFORM TO THE PROVISIONS OF THE IBC 2006 AS APPLICABLE

1.0 DESIGN LOADS

1.1 DEAD LOADS

1.1.1 ROOF DEAD LOADS - CONCRETE FRAMING

	MAXIMUM GRAVITY LOAD
CONC FLAT SLAB	4.80 KPa
MECH/ELEC/PLUMBING	0.15 KPa
MISC	0.05 KPa
	5.00 KPa

1.1.2 ROOF DEAD LOADS - CONVENTIONAL LIGHT FRAMING

	MAXIMUM GRAVITY LOAD	MINIMUM GRAVITY LOAD
LIGHT GAUGE FRAMING	0.20 KPa	0.15 KPa
INSULATION	0.10 KPa	0.05 KPa
METAL ROOFING	0.14 KPa	0.05 KPa
	0.44 KPa	0.25 KPa

1.1.3 FLOOR PARTITION ALLOWANCE

0.96 KPa

1.2 LIVE LOADS (PER IBC 2006)

1.2.1 ROOF LIVE LOADS: ALL BUILDINGS

GREATER OF 1.0 KPa MINIMUM OR SNOW LOAD

1.2.2 ELEVATED FLOOR UNIFORM LIVE LOADS

CORRIDOR	4.80 KPa
ALL OTHER	2.40 KPa

1.2.3 SLAB-ON-GRADE LIVE LOADS

ALL BUILDINGS	4.80 KPa

1.3 SNOW LOADS (PER IBC 2006)

1.3.1 DESIGN PARAMETERS

GROUND SNOW LOAD (per UFC 3-310-01)	1.0 KPa
SNOW IMPORTANCE FACTOR	1.0
SNOW EXPOSURE FACTOR	1.0

1.4 SEISMIC LOADS (PER IBC 2006 & UFC 3-310-04)

1.4.1 SEISMIC PARAMETERS - CAST-IN-PLACE CONCRETE STRUCTURES

SEISMIC OCCUPANCY CATEGORY	II
SEISMIC IMPORTANCE FACTOR (I)	1.0
SEISMIC SITE CLASS	D
Ss	1.28
S1	0.51
Sds	0.853
Sd1	0.51
SEISMIC DESIGN CATEGORY	D
SEISMIC RESISTING SYSTEM	DUAL SYSTEM: SPECIAL REINFORCED CONRETE MOMENT FRAMES SPECIAL REINFORCED MASONRY SHEAR WALLS
RESPONSE MODIFICATION FACTOR (R)	5.5
RESPONSE COEFFICIENT (Cs)	0.16
SEISMIC ANALYTICAL PROCEDURE	EQUIV LATERAL FORCE
SEISMIC BASE SHEAR	2942kN

US Army Corps of Engineers
Afghanistan Engineer District

SYMBOL	DESCRIPTION	DATE	APR

DESIGNED BY: KMP
DWN BY: RCG
CHK BY: CWW
DATE: 09-30-09
SUBMITTED BY: BAKER
FILE NO.: ANPSDS-001XXX

Michael Baker Jr., Inc.
A unit of Michael Baker Corporation
Airside Business Park
100 Airside Drive
Moon Township PA 15108
www.mbakercorp.com

STANDARD DESIGN
ADMINISTRATION BUILDING - 2-STORY (1446 GSM)
WOOD FIRED HEAT OPTION

GENERAL NOTES & DESIGN CRITERIA

SHEET REFERENCE NUMBER:
S1

100% SUBMISSION

MINIMUM LAP SPLICES OF REINFORCING BARS IN TENSION (PER ACI 318M-05)

f'c = 28MPa CONCRETE

BAR SIZE \ CENTER TO CENTER BAR SPACING	(---TOP BARS--) LESS THAN 4db	(---TOP BARS--) 4db OR MORE	(--OTHER BARS--) LESS THAN 4db	(--OTHER BARS--) 4db OR MORE	(--OTHER BARS--) 4db
#10	460	460	410	410	40
#13	660	610	510	480	50
#16	1020	760	790	580	60
#19	1450	910	1120	710	80
#22	1960	1090	1500	840	90
#25	2590	1450	1980	1120	100
#29	3280	1830	2510	1420	110
#32	4140	2340	3200	1780	130
#36	5080	2840	3910	2180	140

NOTES:

1. LAP SPLICES ABOVE ARE IN MILLIMETERS UON.
2. YIELD STRENGTH OF REINFORCEMENT, fy, IS 420MPa (LAP SPLICE LENGTH IS IN MILLIMETERS).
3. CONCRETE IS NORMAL WEIGHT (2400Kg/m^3).
4. TOP BAR INDICATES HORIZONTAL REINFORCEMENT WHICH IS PLACED ABOVE 300mm OR MORE OF FRESH CONCRETE.
5. SEE COLUMN SCHEDULE FOR COLUMN AND SHEAR WALL VERTICAL LAP SPLICE.
6. STRAIGHT DEVELOPMENT LENGTH OF AN UNLAPPED BAR IS EQUAL TO VALUE FROM TABLE DIVIDED BY 1.3.
7. CATEGORY FOR BARS SPACED LESS THAN 4d, OR ON CENTER CORRESPONDS TO CATEGORY 1 IN THE CRSI HANDBOOK WHEREAS FOR BARS SPACED 4d, OR MORE ON CENTER CORRESPOND TO CRSI CATEGORY 5.

CONCRETE COVER SCHEDULE

MINIMUM CONCRETE COVER PROTECTION FOR REINFORCEMENT BARS SHALL BE AS FOLLOWS: (SEE ACI 318M-05, SECTION 7.7 FOR CONDITIONS NOT NOTED). DIMENSIONS FOR BAR PLACEMENT GIVEN IN SECTIONS AND DETAILS SHALL SUPERSEDE MINIMUM COVER REQUIREMENTS GIVEN HERE. DIMENSIONS ARE IN mm.

FOOTINGS (EARTH FORMED)		70
COLUMNS / PIERS (TO TIES)		40
GRADE BEAMS OR SLAB TURNED DOWN EDGES:		
TOP		40
BOTTOM (EARTH FORMED)		70
SIDES (EARTH FORMED)		70
SIDES (BOARD FORMED)	#16 BAR & SMALLER	40
	#19 THRU #36 BAR	50
ELEVATED BEAMS & SLABS:		
BEAM TIES & STIRRUPS (NOT EXPOSED TO WEATHER)		40
BEAM TIES & STIRRUPS (EXPOSED TO WEATHER)		50
FLOOR SLABS (NOT EXPOSED TO WEATHER)		20
FLOOR SLABS (EXPOSED TO WEATHER)		
#19 & LARGER		50
#13 & SMALLER		40
ROOF SLAB BARS		25
SLABS-ON-GRADE (NO EXPOSURE TO WEATHER) FROM TOP		20
SLABS-ON-GRADE (EXPOSURE TO WEATHER) FROM TOP		40
UTILITY TUNNEL WALLS, RETAINING WALLS AND SHEAR WALLS, (NO SURFACES SHALL BE EARTH FORMED) EARTH SIDE AND FRONT SIDE (EXPOSED TO WEATHER):		
#16 BAR AND SMALLER		40
#19 THRU #36 BAR		50

PROVIDE STANDARD BAR CHAIRS AND SPACERS AS REQUIRED TO MAINTAIN CONCRETE PROTECTION SPECIFIED.

MASONRY CONCRETE LINTEL SCHEDULE

OPENING TYPE OR SIZE, BEAM LOCATION OR TYPE	MAX SPAN (mm)	BEAM DEPTH (mm)	MAIN REINFORCING TOP	MAIN REINFORCING BOTTOM	MAIN REINFORCING OTHER	SHEAR REINF STIRRUPS
EXT WINDOW OR DOOR	900	400	(2)-#13	(2)-#13		----
INT WALL OPENING, NON-BEARING	1800	400		(2)-#13		----
INT WALL OPENING, NON-BEARING	900	200		(2)-#13		----

1. STRUCTURAL DRAWINGS DO NOT INDICATE ALL OPENINGS IN MASONRY WALLS. VERIFY NUMBER, SIZE AND LOCATION OF ALL OPENINGS IN MASONRY WALLS FROM ARCHITECTURAL SHEETS AND APPROVED PLUMBING, MECHANICAL, AND ELECTRICAL SHC

-NGTH OF 28 MPa AT 28 DAYS.

5. CONTRACTOR SHALL SUBMIT FOR APPROVAL SHOP DRAWINGS AND SCHEDULES SHOWING SIZE, DETAILS, LOCATIONS, ETC FOR ALL CAST-IN-PLACE BEAMS IN CMU WALLS.

TYPICAL CMU WALL REINFORCING SCHEDULE

WALL TYPE OR LOCATION	WALL THICKNESS (mm)	CONT. VERT. REINF. (CENTERED IN CMU, UON)	CONT. CAST IN PLACE LINTEL (CIP BB) DEPTH (mm)	REINF (BOTT UON)	MAX CIPL VERT SPACING (mm)	REMARKS
ALL PERIMETER/EXTERIOR WALLS (UON)	200	1-#16 @ 800	200	2-#16	1200	-----
NON-LOAD BEARING INTERIOR WALLS WITH TOP AND BOTT. SUPPORTS	200	1-#13 @ 1200	200	2-#16	1200	-----

NOTES:

1. REINFORCING SIZES AND SPACING GIVEN IN SECTIONS AND DETAILS SHALL SUPERSEDE THE ABOVE SCHEDULE REQUIREMENTS.
2. PROVIDE CONTINUOUS CAST IN PLACE CONCRETE BOND BEAM AT ALL WALL LATERAL SUPPORT LOCATIONS.
3. REINFORCING INDICATED SHALL BE CONTINUOUS FOR FULL EXTENT OF SPLICE FOLLOWING THE REQUIREMENTS OF THE LAP SPLICE TABLE SHOWN ON THIS SHEET.
4. WALLS HAVE BEEN DESIGNATED AS VERTICALLY SPANNING UON AND THEREFORE MUST BE TEMPORARILY SUPPORTED DURING CONSTRUCTION UNTIL THE SUPPORTING DIAPHRAGMS (FLOOR AND ROOF SYSTEMS) HAVE BEEN COMPLETELY INSTALLED. SHORING IS THE RESPONSIBILITY OF THE CONTRACTOR.
5. ALL CMU WALLS SHALL BE FULLY GROUTED IN LIFTS NOT EXCEEDING THOSE BY CODE (UON)
6. SEE TYPICAL CMU WALL DETAILS ON SHEET S10.

CONCRETE MATERIALS SCHEDULE

STRUCTURAL ELEMENT	f'c CONCRETE COMPRESSIVE STRENGTH @ 28 DAYS (MPa)
SLAB-ON-GRADE/TURN-DOWN SLABS	28
FLOOR SLABS	28
ALL FOOTINGS (UON)	28
MISC. CURBS, WALLS AND PADS UON	28
CAST-IN-PLACE LINTEL	28
CONCRETE FRAMING - BEAMS AND COLUMNS	28

NOTES:

1. ALL CONCRETE SHALL BE NORMAL WEIGHT CONCRETE. (2400 Kg/m^3 UON)
2. ALL CONCRETE SHALL HAVE A MAX WATER-CEMENT RATIO OF 0.45.

STANDARD HOOKS IN TENSION PER (ACI 318M-05)

BAR SIZE	HOOK DEVELOPMENT LENGTH Ldh (mm) f'c 28 MPa
#10	180
#13	250
#16	300
#19	380
#22	430
#25	480
#29	560
#32	610
#36	690

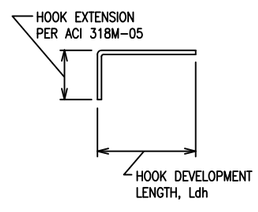

NOTES:

1. CONCRETE IS NORMAL WEIGHT CONCRETE.
2. BAR YIELD STRENGTH, fy = 420 MPa
3. SIDE COVER REQUIREMENTS OF ACI SECT. 12.5.3 ARE ASSUMED TO NOT BE MET.
4. TIE OR STIRRUP REQUIREMENTS OF ACI SECT. 12.5.3 ARE ASSUMED TO NOT BE MET.
5. REDUCTION FOR EXCESS REINFORCEMENT IS NOT TAKEN.
6. HOOK DEVELOPMENT LENGTH IS VALID FOR 180° HOOKS ALSO.

MASONRY REINFORCING MINIMUM LAP SPLICES

BAR SIZE	BASIC LAP SPLICE Ld FOR CMU REINFORCING
#10	450
#13	600
#16	750
#19	900
#22	1050
#25	1200

MAXIMUM CMU WALL UNSUPPORTED HEIGHT OR LENGTH

	WALL THICKNESS (mm)	EXTERIOR WALL NON-LOAD BEARING (mm)	INTERIOR NON-LOAD BEARING WALL (mm)
MAX HEIGHT OR LENGTH BETWEEN SUPPORTS	200	4800	7200

NOTE: CMU WALL MAXIMUM LATERAL SUPPORT SPACING GIVEN IN SECTIONS AND DETAILS SHALL SUPERSEDE THE ABOVE SCHEDULE REQUIREMENTS.

US Army Corps of Engineers
Afghanistan Engineer District

SYMBOL	DESCRIPTION	DATE	APR

DATE: 09-30-09
SUBMITTED BY: BAKER
FILE NO.: ANPSDS-003XXX
DESIGNED BY: KMP
DWN BY: RCG
CHK BY: CWW

Michael Baker Jr., Inc
A unit of Michael Baker Corporation
Airside Business Park
100 Airside Drive
Moon Township PA 15108
www.mbakercorp.com

STANDARD DESIGN
ADMINISTRATION BUILDING - 2-STORY (1446 GSM)
WOOD FIRED HEAT OPTION

SCHEDULES

SHEET REFERENCE NUMBER:
S3

100% SUBMISSION

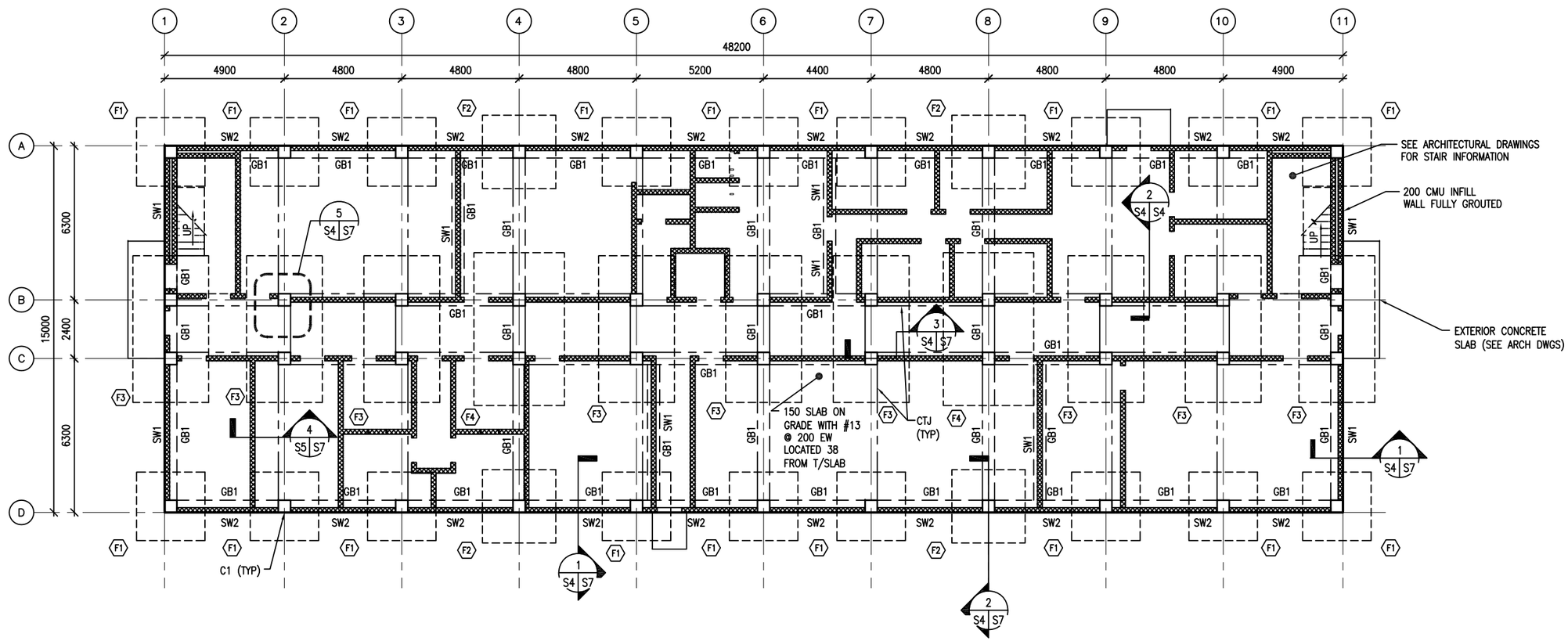

FOUNDATION PLAN

SCALE: 1:100

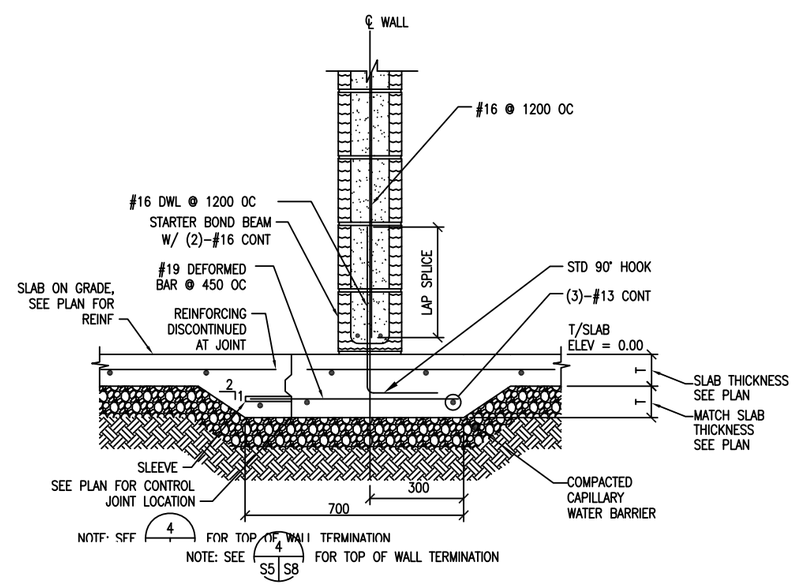

SECTION

SCALE: 1:10

PLAN NOTES:

1. FINISH FIRST FLOOR ELEVATION SHALL BE (DATUM 0.0) ALL PLUS OR MINUS DIMENSIONS INDICATED ON PLAN OR REFERRED TO IN NOTES RELATE TO FINISH FIRST FLOOR ELEVATION.
2. TOP OF EXTERIOR FOOTINGS SHALL BE -950 UNLESS OTHERWISE INDICATED.
3. TOP OF INTERIOR FOOTINGS WITHOUT GRADE BEAMS ABOVE SHALL BE -600
4. TOP OF INTERIOR FOOTINGS WITH GRADE BEAMS ABOVE SHALL BE -950
5. SPREAD FOOTINGS INDICATED THUS F# ON PLAN. REFER TO SPREAD FOOTING SCHEDULE ON SHEET S2.
6. COLUMNS INDICATED THUS C# ON PLAN. REFER TO COLUMN SCHEDULE ON SHEET S2.
7. GRADE BEAM INDICATED THUS GB# ON PLAN, REFER TO BEAM SCHEDULE ON SHEET S2
8. REFER TO SHEETS S1 TO S3 FOR STRUCTURAL NOTES AND BASIS OF DESIGN.
9. CTJ & CSJ INDICATES SLAB CONTROL OR CONSTRUCTION JOINTS RESPECTIVELY. REFER TO SHEET S10 FOR DETAILS.
10. SEE CMU WALL REINFORCING SCHEDULE ON SHEET S3.
11. REFER TO ARCHITECTURAL SHEETS FOR MASONRY PARTITION TYPES.
12. SEE MECHANICAL AND ELECTRICAL SHEET FOR CONCRETE PAD LOCATIONS, SIZES, AND THICKNESS NOT SHOWN. SEE SHEET S10 FOR DETAILS.
13. THICKENED SLAB UNDER CMU WALLS NOT SHOWN FOR CLARITY

UNLESS OTHERWISE NOTED, LINEAR DIMENSIONS SHOWN ARE IN MILLIMETERS (MM)

0 200 400 800
SCALE: 1: 10

0 2000 4000 8000
SCALE: 1: 100

US Army Corps of Engineers
Afghanistan Engineer District

SYMBOL	DESCRIPTION	DATE	APR

DESIGNED BY: KMP
DATE: 09-30-09
DWN BY: RCG
SUBMITTED BY: BAKER
CHK BY: CWW
FILE NO.: ANPSDS-104XXX

Michael Baker Jr., Inc.
A unit of Michael Baker Corporation
Airside Business Park
100 Airside Drive
Moon Township PA 15108
www.mbakercorp.com

STANDARD DESIGN
ADMINISTRATION BUILDING - 2-STORY (1446 GSM)
WOOD FIRED HEAT OPTION

FOUNDATION PLAN

SHEET REFERENCE NUMBER:
S4

100% SUBMISSION

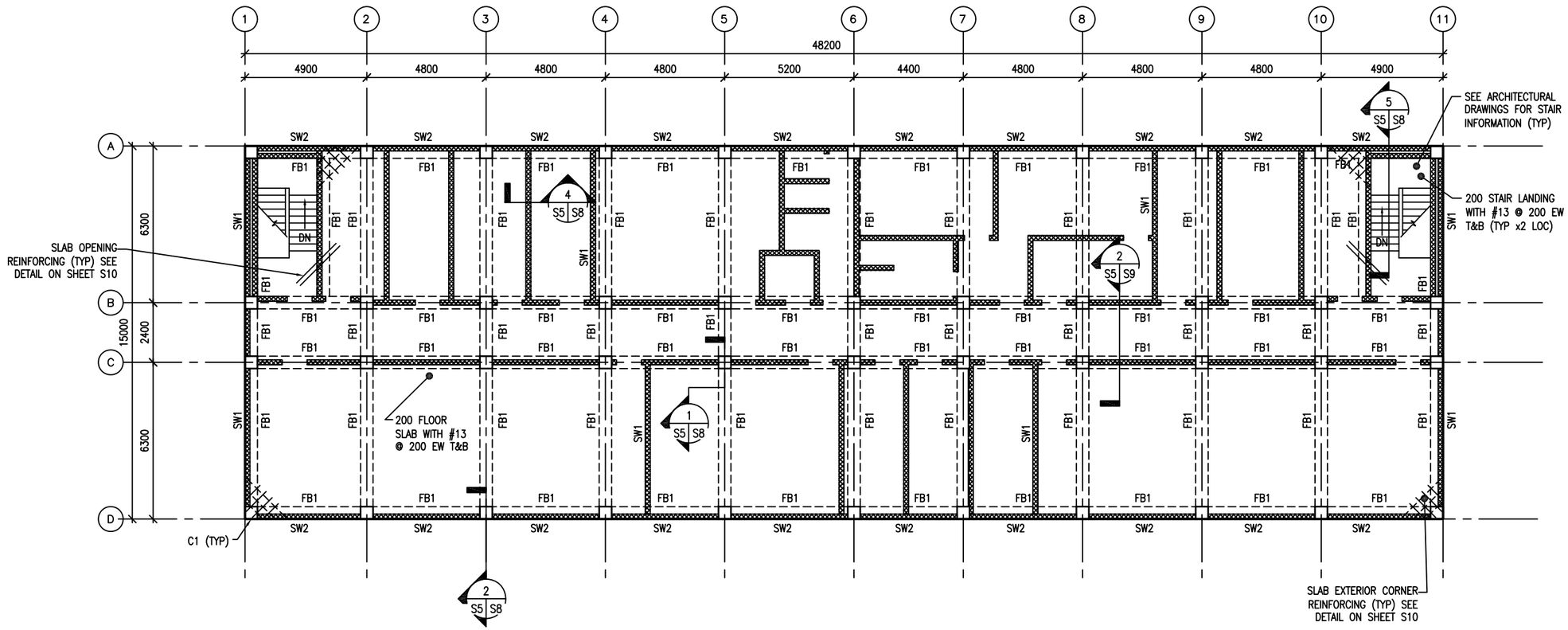

SECOND FLOOR FRAMING PLAN

1 S5 S5

SCALE: 1:100

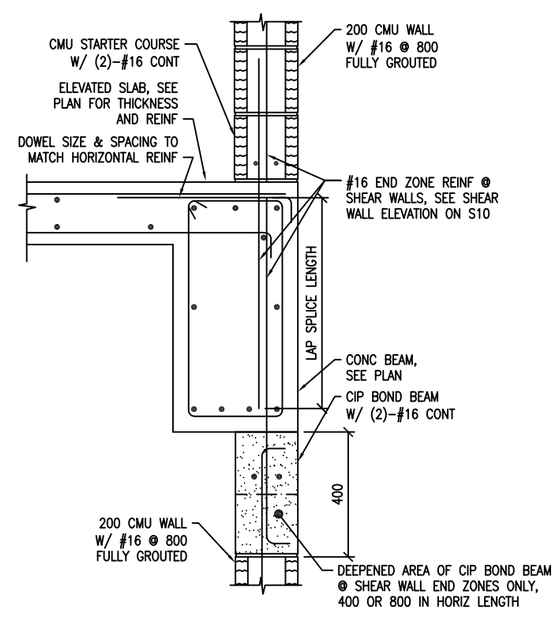

TYP SHEAR WALL END ZONE SECTION

2 S10 S5

SCALE: 1:10

PLAN NOTES:

1. TOP OF SLAB ELEVATION = 3600 UNLESS NOTED OTHERWISE.
2. FLOOR BEAM INDICATED BY FB# ON PLAN. REFER TO BEAM SCHEDULE ON SHEET S2
3. REFER TO SHEETS S1 TO S3 FOR STRUCTURAL NOTES AND BASIS OF DESIGN.
4. SEE CMU WALL REINFORCING SCHEDULE ON SHEET S3.
5. REFER TO ARCHITECTURAL SHEETS FOR FLOOR SLAB OPENING LOCATIONS AND MASONRY PARTITION TYPES.
6. SEE MECHANICAL AND ELECTRICAL SHEETS FOR CONCRETE PAD LOCATIONS, SIZES, AND THICKNESS NOT SHOWN. SEE SHEET S10 FOR DETAILS.

UNLESS OTHERWISE NOTED, LINEAR DIMENSIONS SHOWN ARE IN MILLIMETERS (MM)

0 2000 4000 8000

SCALE: 1: 100

US Army Corps of Engineers
Afghanistan Engineer District

SYMBOL	DESCRIPTION	DATE	APR

DESIGNED BY: KMP
DATE: 09-30-09
DWN BY: RCG
SUBMITTED BY: BAKER
CHK BY: CWW
FILE NO.: ANPSDS-105XXX

Michael Baker Jr., Inc
A unit of Michael Baker Corporation
Airside Business Park
100 Airside Drive
Moon Township PA 15108
www.mbakercorp.com

STANDARD DESIGN
ADMINISTRATION BUILDING - 2-STORY (1446 GSM)
WOOD FIRED HEAT OPTION

SECOND FLOOR FRAMING PLAN

SHEET REFERENCE NUMBER:
S5

100% SUBMISSION

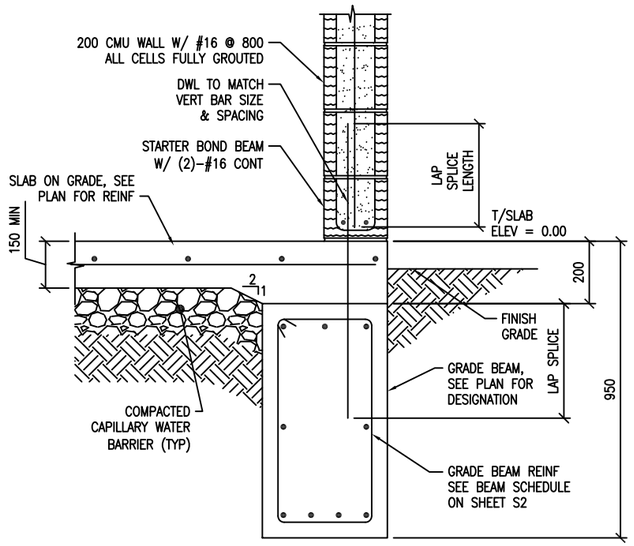

1 S4 S7 SECTION
SCALE: 1:10

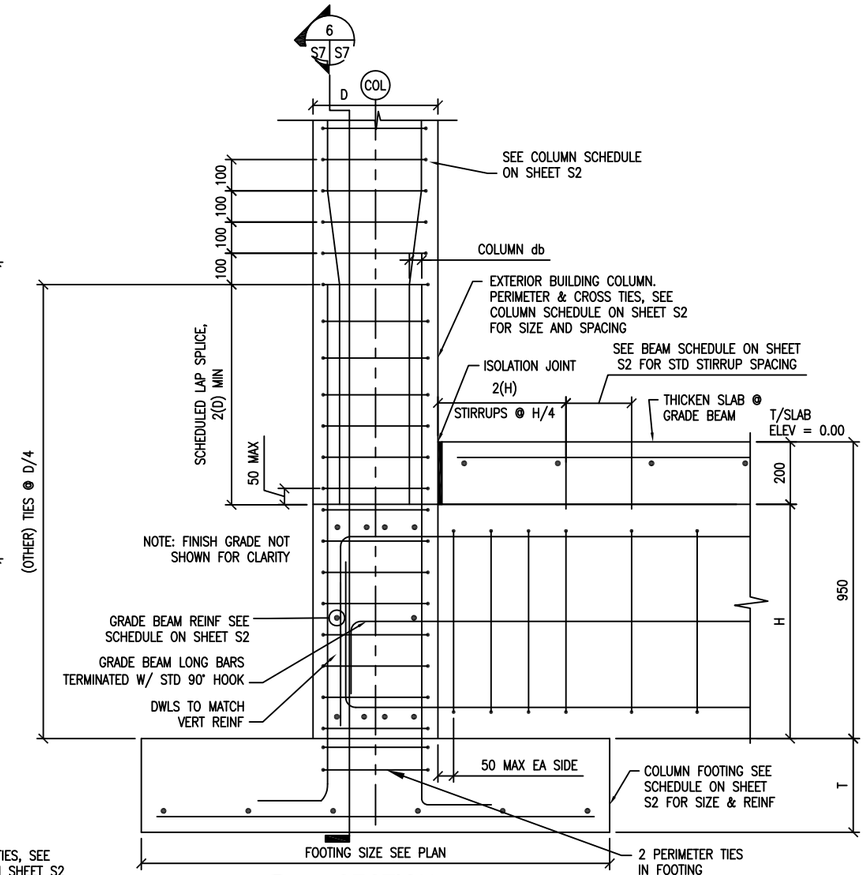

2 S4 S7 SECTION
SCALE: 1:10

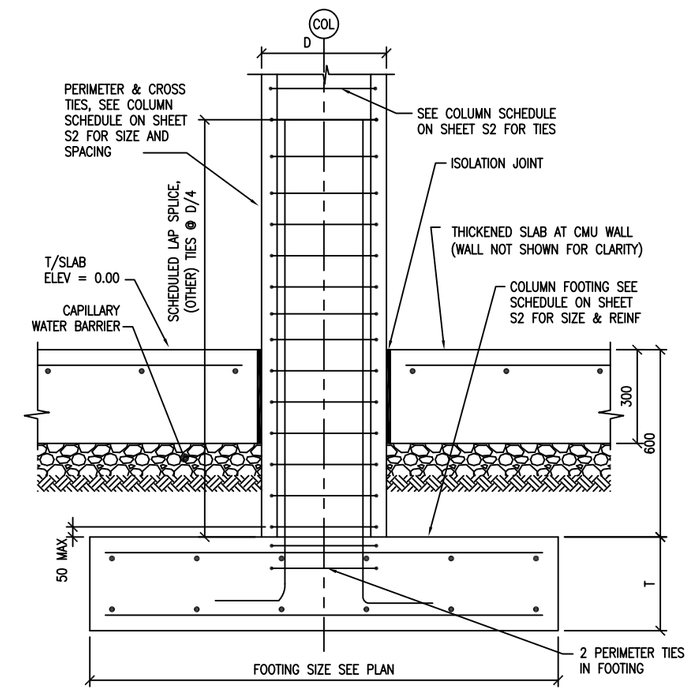

3 S4 S7 SECTION
SCALE: 1:10

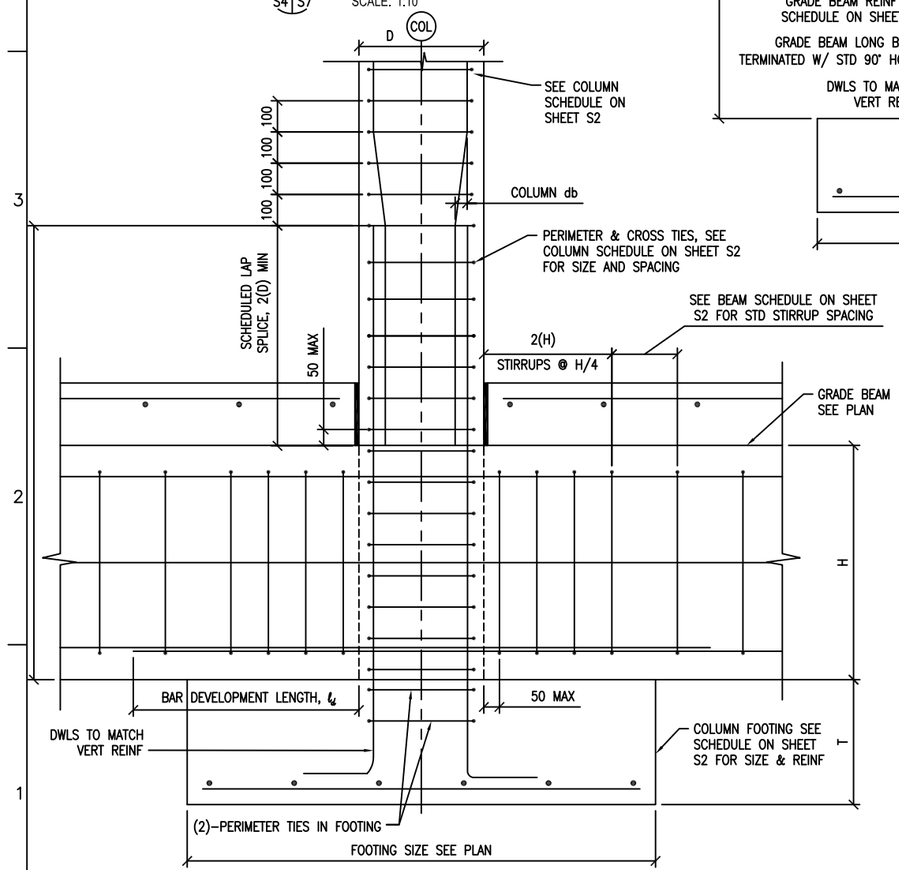

6 S7 S7 SECTION
SCALE: 1:10

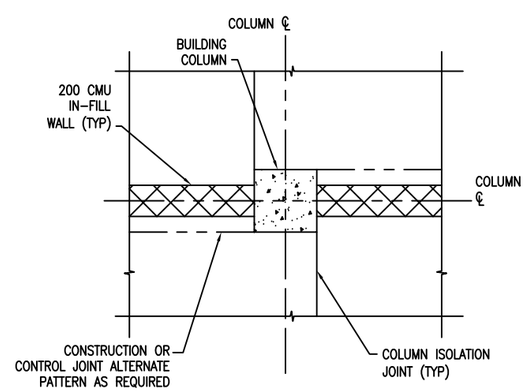

5 S4 S7 TYPICAL ISOLATION JOINT DETAIL
SCALE: 1:20

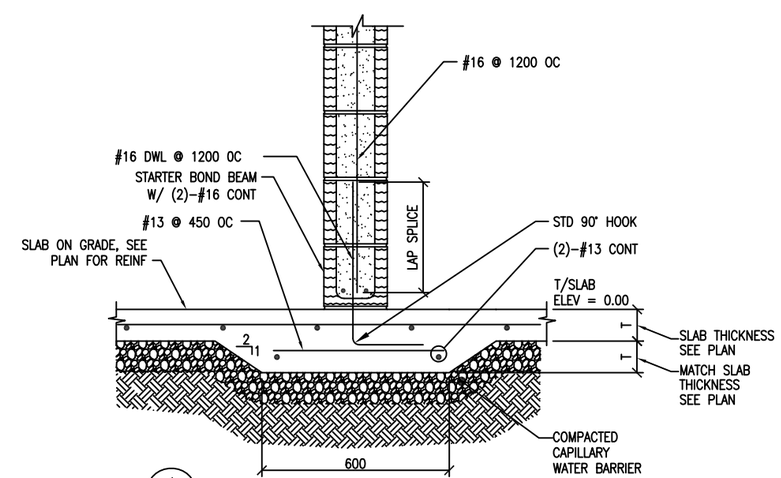

4 S4 S7 SECTION
SCALE: 1:10

UNLESS OTHERWISE NOTED, LINEAR DIMENSIONS
SHOWN ARE IN MILLIMETERS (MM)

0 200 400 800
SCALE: 1: 10

0 400 800 1600
SCALE: 1: 20

US Army Corps of Engineers
Afghanistan Engineer District

SYMBOL	DESCRIPTION	DATE	APR

DESIGNED BY: KMP
DWN BY: RCG
CHK BY: CWW
DATE: 09-30-09
SUBMITTED BY: BAKER
FILE NO.: ANPSDS-307XXX

Michael Baker Jr., Inc.
A unit of Michael Baker Corporation
Airside Business Park
100 Airside Drive
Moon Township PA 15108
www.mbakercorp.com

STANDARD DESIGN
ADMINISTRATION BUILDING - 2-STORY (1446 GSM)
WOOD FIRED HEAT OPTION
FOUNDATION SECTIONS & DETAILS

SHEET REFERENCE NUMBER:
S7

100% SUBMISSION

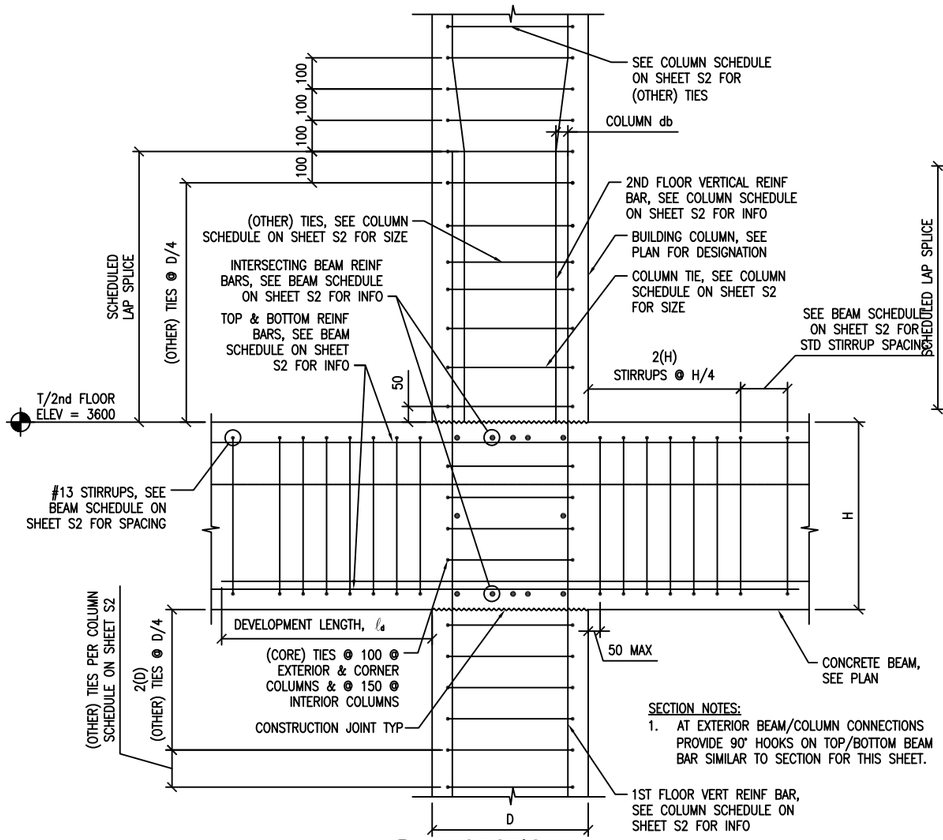

SECTION NOTES:
1. AT EXTERIOR BEAM/COLUMN CONNECTIONS PROVIDE 90° HOOKS ON TOP/BOTTOM BEAM BAR SIMILAR TO SECTION FOR THIS SHEET.

1 SECTION
S5 S8 SCALE: 1:10

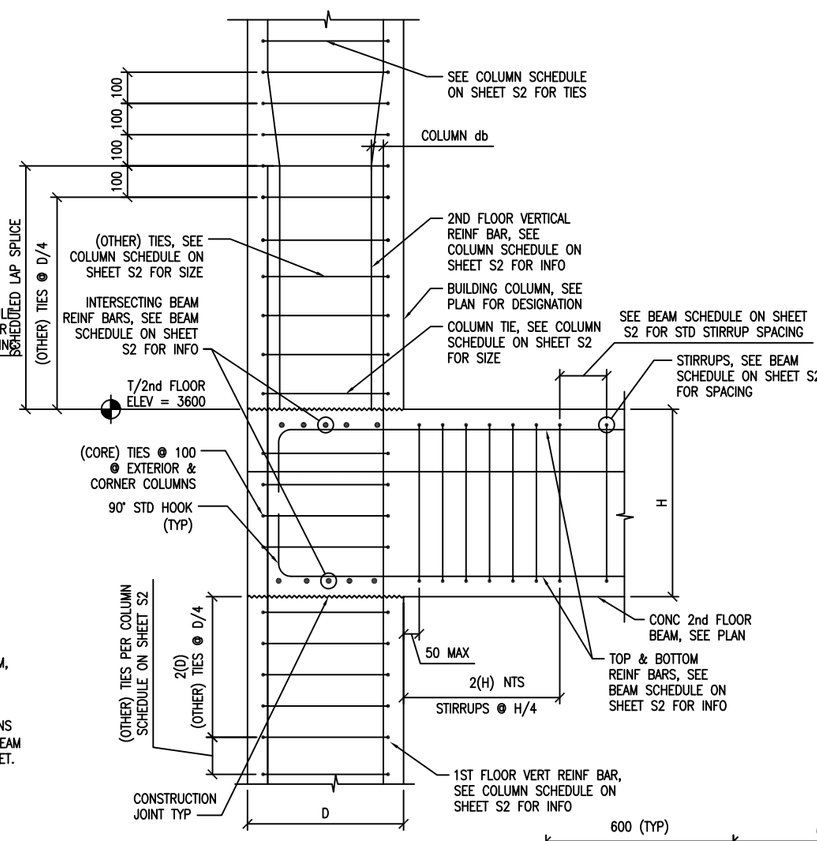

2 SECTION
S5 S8 SCALE: 1:10

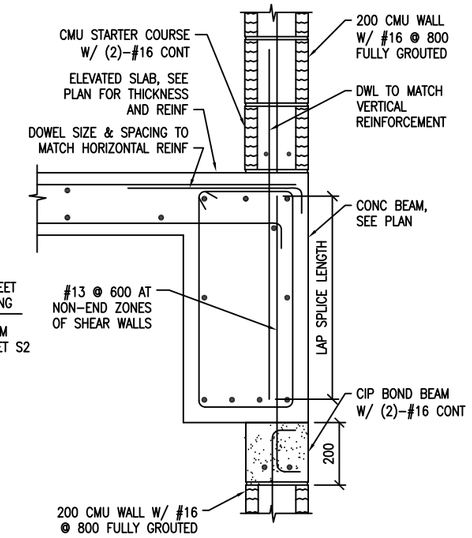

3 SECTION
S10 S8 SCALE: 1:10

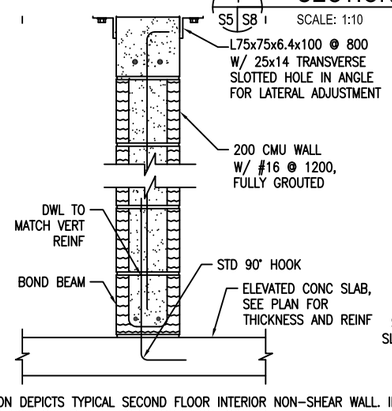

NOTES:
1. SECTION DEPICTS TYPICAL SECOND FLOOR INTERIOR NON–SHEAR WALL. IN FLOOR NON–SHEAR WALL TOP TERMINATION SIMILAR.
2. EMBED EXPANSION ANCHOR 82 MINIMUM INTO SOLID CONCRETE.
3. USE OVERSIZED STEEL PLATE WASHER 3MM THICK BETWEEN ANCHOR HEAI
4. SEE SHEETS S3 & S10 FOR CMU WALL REINF
5. INSTALL 13MM ISOLATION JOINT VERTICALLY AT WALL ENDS THAT ARE ADJA CONCRETE COLUMNS.
6. SLAB REINFORCING NOT SHOWN FOR CLARITY.

4 SECTION
S5 S8 SCALE: 1:10

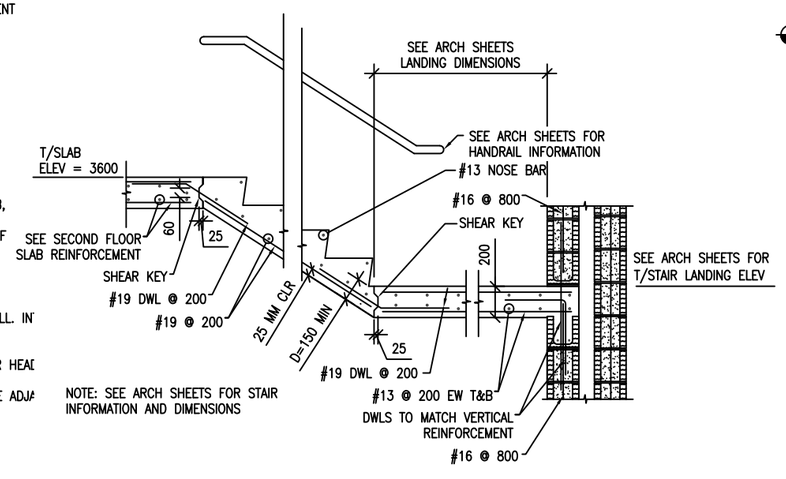

NOTE: SEE ARCH SHEETS FOR STAIR INFORMATION AND DIMENSIONS

5 SECTION
S5 S8 SCALE: 1:20

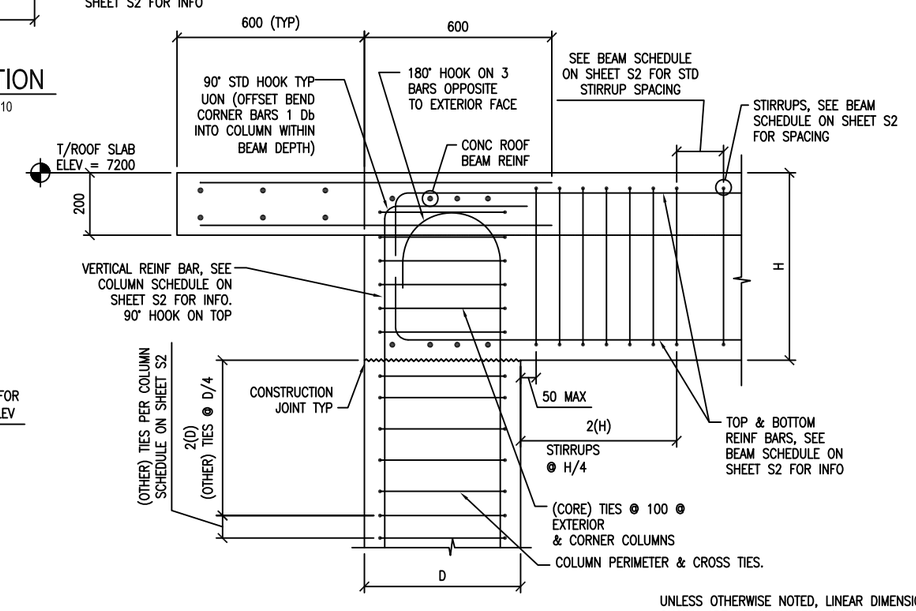

6 SECTION
S6 S8 SCALE: 1:20

UNLESS OTHERWISE NOTED, LINEAR DIMENSIONS SHOWN ARE IN MILLIMETERS (MM)

0 200 400 800
SCALE: 1: 10

0 400 800 1600
SCALE: 1: 20

US Army Corps of Engineers
Afghanistan Engineer District

SYMBOL	DESCRIPTION	DATE	APR

DESIGNED BY: KMP
DATE: 09-30-09
DWN BY: RCG
SUBMITTED BY: BAKER
CHK BY: CWW
FILE NO.: ANPSDS-30BXXX

Michael Baker Jr., Inc.
A unit of Michael Baker Corporation
Airside Business Park
100 Airside Drive
Moon Township PA 15108
www.mbakercorp.com

STANDARD DESIGN
ADMINISTRATION BUILDING – 2-STORY (1446 GSM)
WOOD FIRED HEAT OPTION

FLOOR & ROOF FRAMING SECTIONS & DETAILS

SHEET REFERENCE NUMBER:
S8

100% SUBMISSION

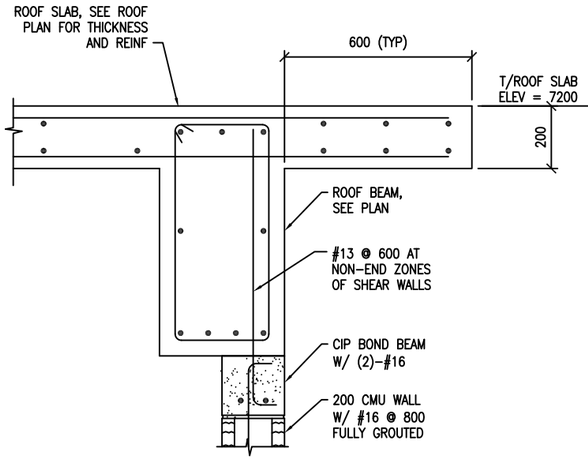

NOTES:
1. REFERENCE THIS SHEETS FOR OVERFRAMING ABOVE ROOF SLAB.

1 S6 S9 SECTION
SCALE: 1:10

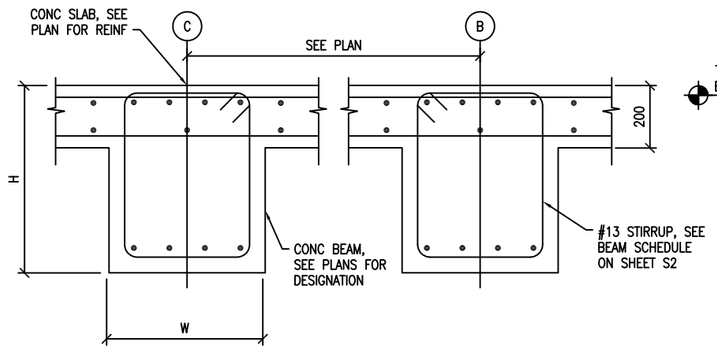

2 S5,S6 S9 SECTION
SCALE: 1:10

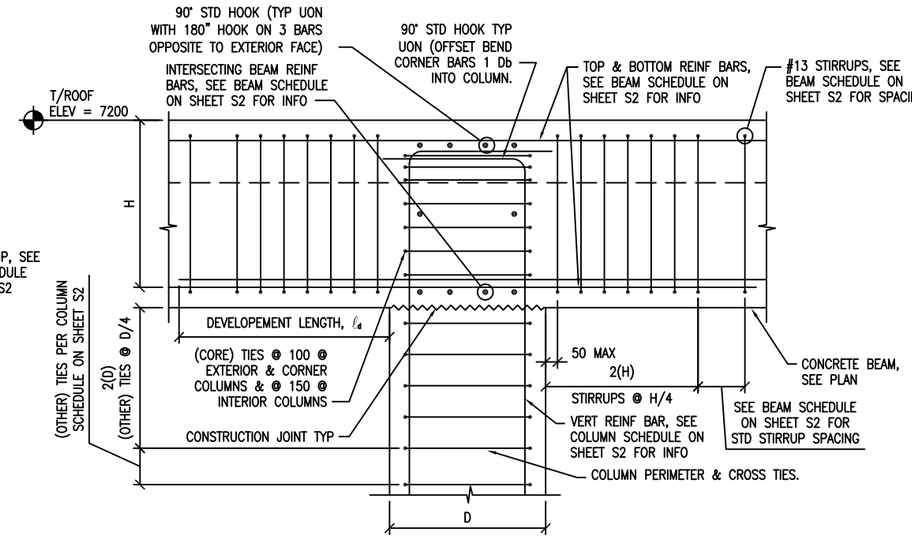

3 S6 S9 SECTION
SCALE: 1:10

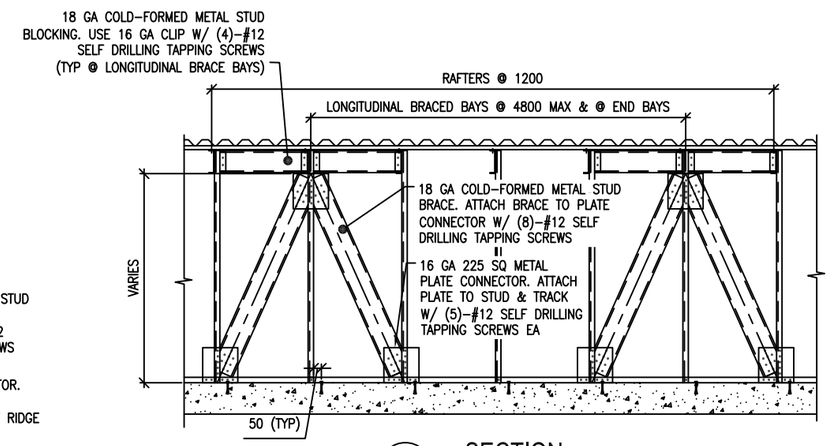

4 S9 S9 SECTION
SCALE: NTS

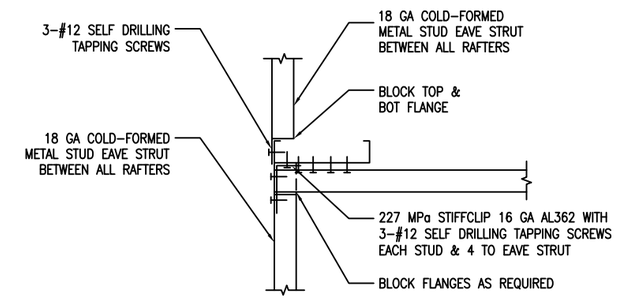

5 S9 S9 SECTION
SCALE: 1:5

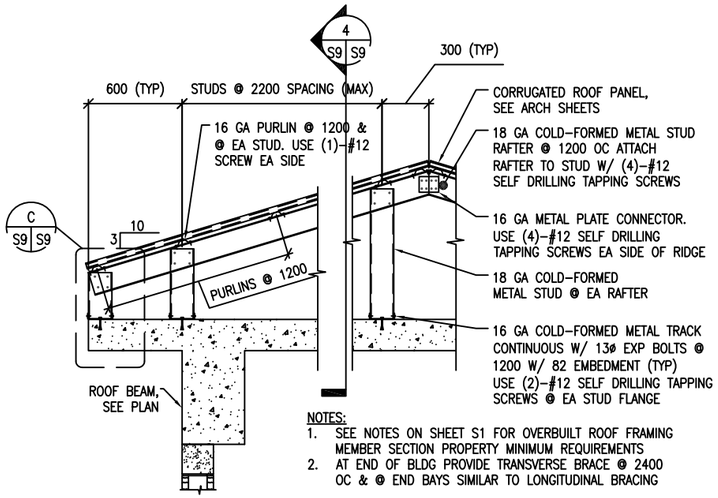

NOTES:
1. SEE NOTES ON SHEET S1 FOR OVERBUILT ROOF FRAMING MEMBER SECTION PROPERTY MINIMUM REQUIREMENTS
2. AT END OF BLDG PROVIDE TRANSVERSE BRACE @ 2400 OC & @ END BAYS SIMILAR TO LONGITUDINAL BRACING

A S9 S9 TYPICAL OVERBUILT ROOF FRAMING DETAIL
SCALE: 1:20

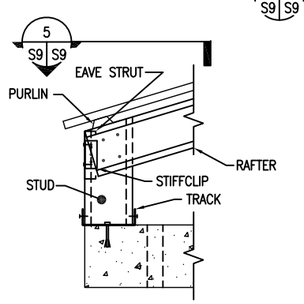

C S9 S9 DETAIL
SCALE: 1:10

DOUBLE LEDGE MEMBERS ARE 18 GA COLD-FORMED METAL TRACK.
FY = 344 MPa
DEPTH = 88.9mm
WIDTH = 34.8mm
MOMENT OF INERTIA, Ix = 236x103 mm^4
SECTION MODULUS, SX = 5.3x103 mm^3

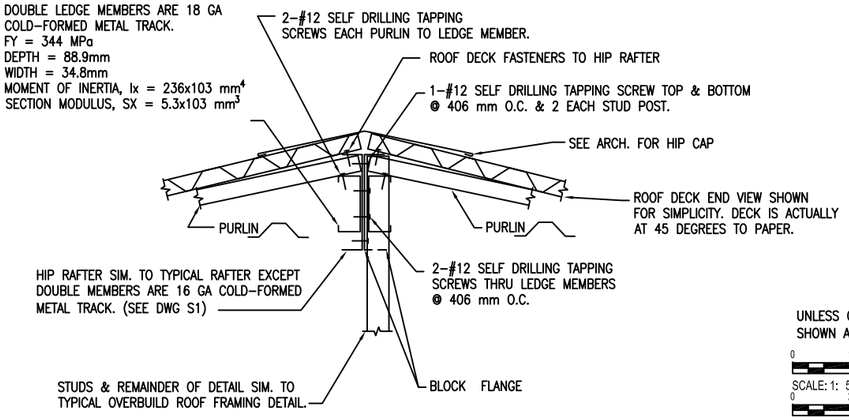

TYPICAL HIP FRAMING DETAIL
SCALE: 1:5

DETAIL NOTE:
AT END OF BLDG PROVIDE TRANSVERSE BRACE @ 2400 OC & @ END BAYS SIMILAR TO LONGITUDINAL BRACING

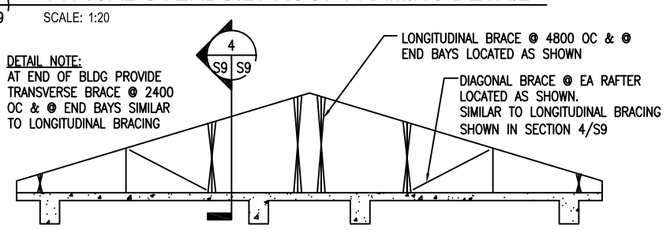

B S9 S9 TYPICAL ROOF BRACE LAYOUT DETAIL
SCALE: NTS

UNLESS OTHERWISE NOTED, LINEAR DIMENSIONS SHOWN ARE IN MILLIMETERS (MM)

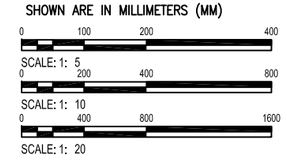

US Army Corps of Engineers
Afghanistan Engineer District

SYMBOL	DESCRIPTION	DATE	APR

DESIGNED BY: KMP
DATE: 09-30-09
DWN BY: RCG
SUBMITTED BY: BAKER
CHK BY: CWW
FILE NO.: ANPSDS-309XXX

Michael Baker Jr., Inc.
A unit of Michael Baker Corporation
Airside Business Park
100 Airside Drive
Moon Township PA 15108
www.mbakercorp.com

STANDARD DESIGN
ADMINISTRATION BUILDING - 2-STORY (1446 GSM)
WOOD FIRED HEAT OPTION
FLOOR & ROOF FRAMING SECTIONS & DETAILS

SHEET REFERENCE NUMBER:
S9

100% SUBMISSION

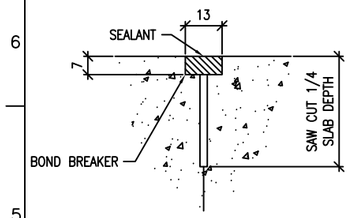

CONTROL JOINT DETAIL

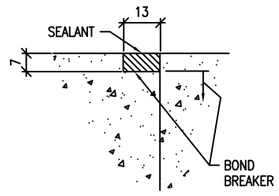

CONSTRUCTION JOINT DETAIL

TYPICAL CONCRETE SLAB JOINT FINISH DETAIL

1 S10 SCALE: NTS

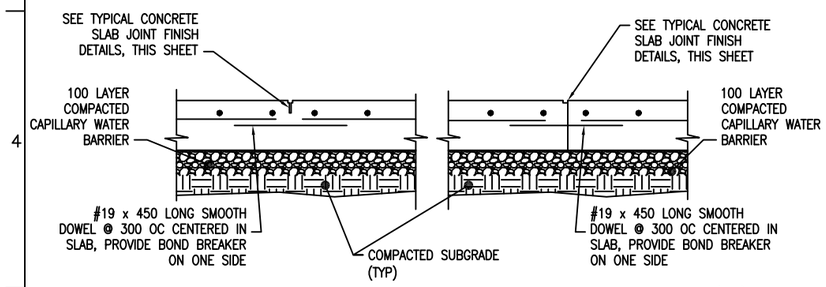

CONTROL JOINT DETAIL (CTJ) CONSTRUCTION JOINT DETAIL (CSJ)

TYPICAL SLAB ON GRADE JOINT DETAILS

2 S10 SCALE: NTS

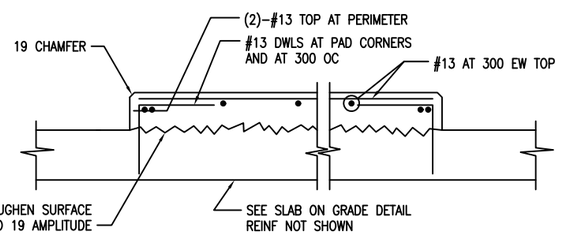

INTERIOR EQUIPMENT PAD DETAIL

3 S10 SCALE: NTS

DETAIL NOTE:
1. COORDINATE EQUIPMENT PAD SIZE AND LOCATIONS W/ ELECTRICAL/MECHANICAL DRAWINGS AND EQUIPMENT MANUFACTURER.

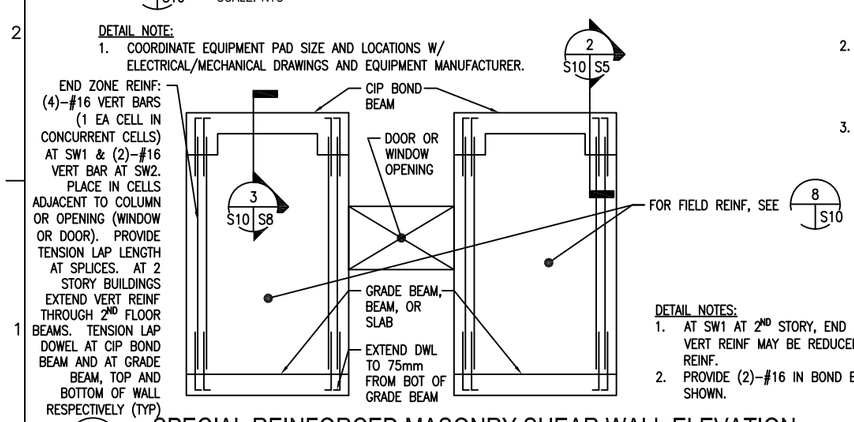

DETAIL NOTES:
1. AT SW1 AT 2ND STORY, END ZONE REINF OF (4)-#16 VERT REINF MAY BE REDUCED TO (3)-#16 VERT REINF.
2. PROVIDE (2)-#16 IN BOND BEAMS AT 1200 OC, NOT SHOWN.

SPECIAL REINFORCED MASONRY SHEAR WALL ELEVATION

4 S10 SCALE: NTS

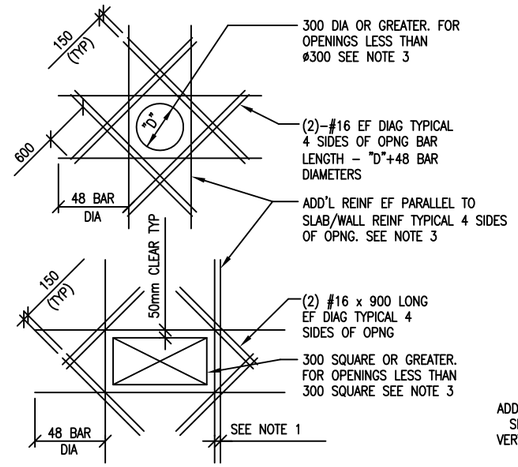

SLAB OPENINGS

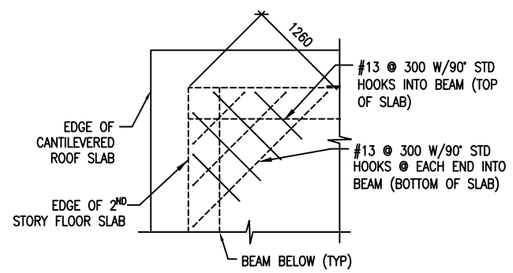

ELEVATED SLAB CORNERS

ADD'L REINFORCEMENT DETAILS

5 S10 SCALE: NTS

DETAIL NOTES:
1. WHERE MORE THAN ONE ADDITIONAL BAR IS REQUIRED PARALLEL TO THE EXISTING SLAB/WALL REINFORCING THE ADDITIONAL REINFORCING BARS SHALL BE SPACED AT 100 ON CENTER.
2. ADDITIONAL REINFORCING PARALLEL TO THE SLAB/WALL REINFORCING SHALL BE #16 BARS THAT PROVIDE A STEEL AREA ON EACH SIDE OF THE OPENING EQUAL TO 1/2 THE AREA OF THE REINFORCING CUT BY THE OPENING.
3. FOR OPENINGS WITH SIDES OR DIAMETERS LESS THAN 300 SPREAD THE SLAB/WALL REINFORCING TO CLEAR THE OPENING.

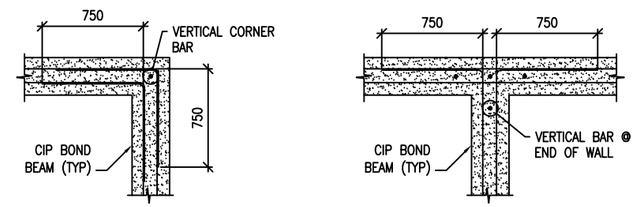

BOND BEAM CORNER BOND BEAM INTERSECTION

CIP BOND BEAM DETAILS

6 S10 SCALE: NTS

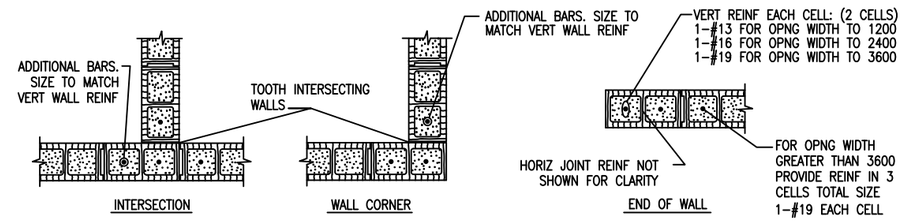

INTERSECTION WALL CORNER END OF WALL

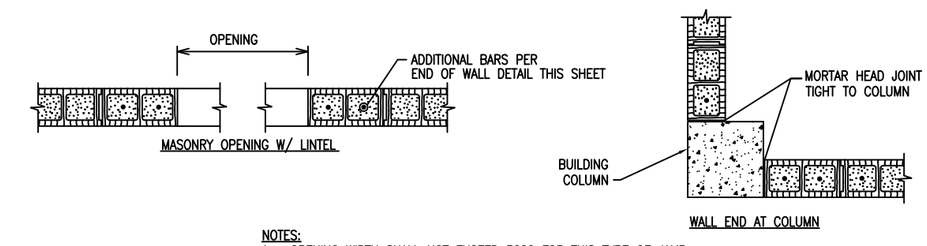

MASONRY OPENING W/ LINTEL WALL END AT COLUMN

NOTES:
1. OPENING WIDTH SHALL NOT EXCEED 3600 FOR THIS TYPE OF JAMB
2. ALL CELLS FULLY GROUTED

TYPICAL CMU DETAILS

7 S10 SCALE: NTS

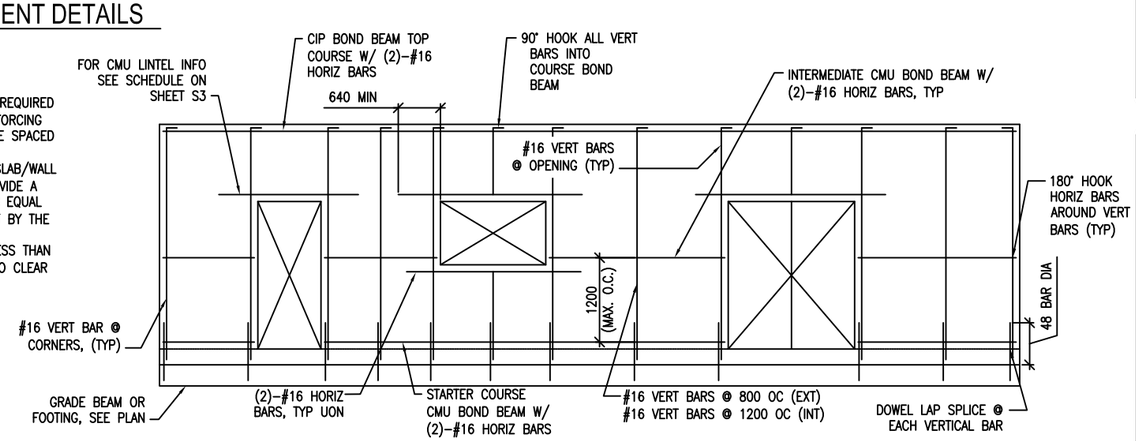

MIN CMU WALL REINFORCING

8 S10 SCALE: NTS

LINTEL NOTES:
MASONRY LINTEL REINFORCEMENT AS PER SCHEDULE ON SHEET S3

UNLESS OTHERWISE NOTED, LINEAR DIMENSIONS SHOWN ARE IN MILLIMETERS (MM)

US Army Corps of Engineers
Afghanistan Engineer District

SYMBOL	DESCRIPTION	DATE	APR

DESIGNED BY: KMP | DATE: 09-30-09
DWN BY: RCG | SUBMITTED BY: BAKER
CHK BY: CWW | FILE NO.: ANPSDS-510XXX

Michael Baker Jr., Inc.
A unit of Michael Baker Corporation
Airside Business Park
100 Airside Drive
Moon Township PA 15108
www.mbakercorp.com

STANDARD DESIGN
ADMINISTRATION BUILDING – 2-STORY (1446 GSM)
WOOD FIRED HEAT OPTION
TYPICAL DETAILS

SHEET REFERENCE NUMBER:
S10

100% SUBMISSION

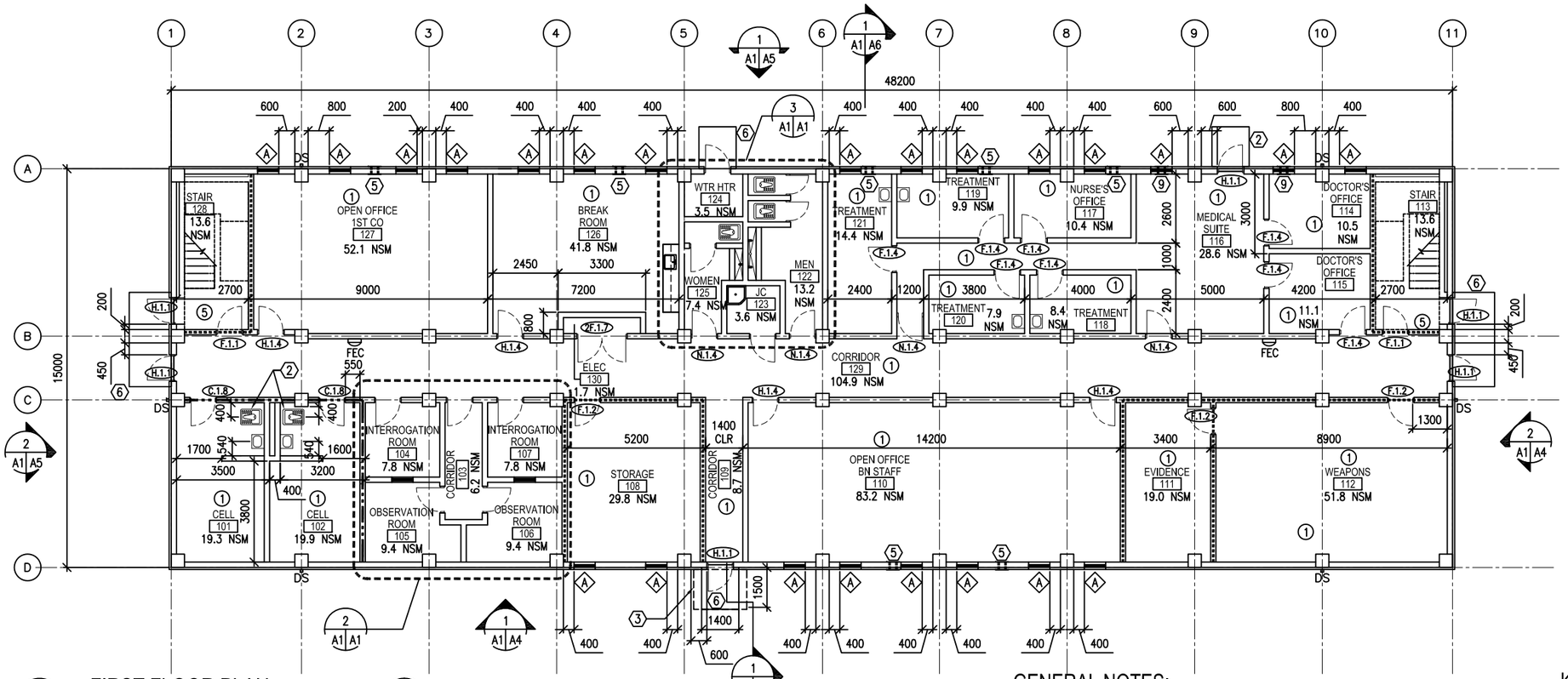

1 A1 A1 FIRST FLOOR PLAN

SCALE: 1:100
FIRST FLOOR – 723.0 GSM
SECOND FLOOR – 723.0 GSM
TOTAL – 1446.0 GSM

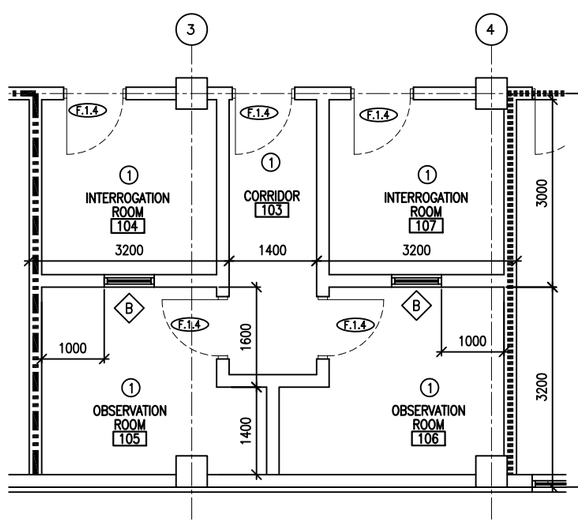

2 A1 A1 ENLARGED PLAN

SCALE: 1:50

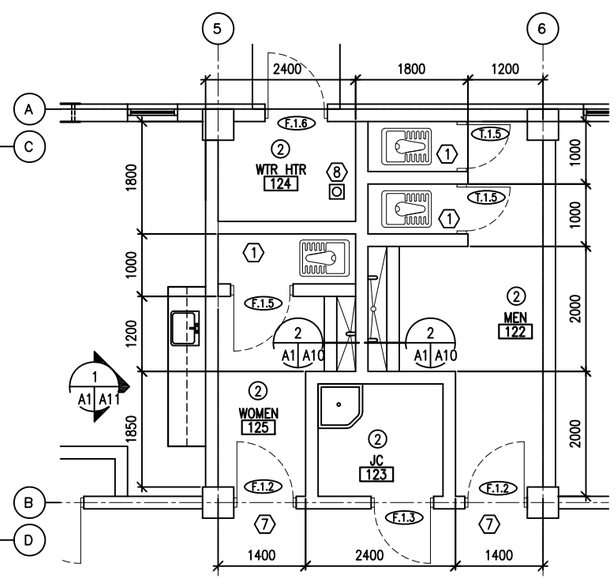

3 A1 A1 ENLARGED PLAN

SCALE: 1:50

GENERAL NOTES:

A. INTERIOR PARTITIONS SHALL BE 200 MM CMU UNLESS NOTED OTHERWISE.

B. OPENINGS FOR DOORS SHALL BE LOCATED 200 MM FROM THE ADJACENT WALL UNLESS NOTED OTHERWISE.

C. SURFACES TO BE PAINTED SHALL BE CLEAN AND FREE OF FOREIGN MATTER BEFORE APPLICATION OF PAINT. CLEANING SHALL BE SCHEDULED SO THAT DUST AND OTHER CONTAMINANTS WILL NOT FALL ON WET, NEWLY PAINTED SURFACES.

D. CONCRETE AND INTERIOR MASONRY SURFACES GROUTED SOLID SHALL BE ALLOWED TO DRY AT LEAST 30 DAYS BEFORE PAINTING EXCEPT CONCRETE SLAB ON GRADE WHICH SHALL BE ALLOWED TO CURE 90 DAYS BEFORE PAINTING.

E. PAINTS CONTAINING LEAD IN EXCESS OF 0.06 PERCENT BY WEIGHT OF THE TOTAL NONVOLATILE CONTENT SHALL NOT BE USED.

F. MERCURIAL FUNGICIDES SHALL NOT BE USED IN OIL–BASE PAINT.

G. REMOVE LOOSE DIRT AND CLEAN SURFACES BEFORE PAINTING. APPLY PAINT TO INTERIOR STRUCTURAL RIGID FRAMINGS AND CEILINGS AND TEST FOR ADHESION. PRIMER COAT FOR MASONRY. INITIAL FIRST COAT WITH AN ACRYLIC LATEX PAINT FOR EXTERIOR SURFACES AND A SECOND COAT WITH A WATER REPELLENT ACRYLIC LATEX PAINT.

H. METAL DOORS AND FRAMES SHALL RECEIVE A PRIMER COAT PLUS TWO COATS OF PAINT.

I. DIMENSIONS ARE TO STRUCTURAL COLUMN GRID, EDGE OF WINDOW OPENINGS, AND TO HINGE SIDE OF DOOR OPENINGS.

J. FILL ANULAR SPACE AT ANY AND ALL PENETRATIONS IN FIRE RATED FLOORS, PARTITIONS AND CEILINGS WITH APPROPRIATE FIRE STOPPING MATERIALS

K. CORRIDOR WALLS ARE NOT RATED IN ACCORDANCE WITH NFPA 101, 38.3.6.1(2).

L. PROVIDE OCCUPANCY SEPARATION IN ACCORDANCE WITH NFPA 101, 38.1.2, 38.3.2, AND TABLE 6.1.14.4.1.

M. PROVIDE 1 HOUR RATED PARTITIONS AT STAIRS IN ACCORDANCE WITH NFPA 38.2.1 AND 7.1.3.2.1 (1).

ROOM FINISHES:

1. WALLS: PAINTED PLASTER,
   FLOOR: SEALED CONCRETE
   CEILING: PAINTED PLASTER APPLIED TO STRUCTURE

2. WALLS: 2400 MM HIGH CERAMIC TILE WAINSCOT, PAINTED PLASTER ABOVE WAINSCOT
   FLOOR: CERAMIC TILE
   CEILING: PAINTED PLASTER

KEY NOTES:

1. TYPICAL TOILET STALL LAYOUT – RE: DETAIL 2/A10
2. TYPICAL TOILET LAYOUT – RE: DETAIL 3/A10
3. LINE OF CANOPY ABOVE.
4. NOT USED.
5. TWO–PIECE WALL THIMBLE AND TRIM PLATE FOR OPTIONAL WOOD BURNING STOVE CHIMNEY PIPE. STOVE AND PIPE BY OTHERS.
6. CONCRETE STOOP – RE: DETAIL 3/A12
7. MOUNT DOOR FRAME FLUSH TO COLUMN
8. FLOOR DRAIN – RE: P1
9. TWO–PIECE WALL THIMBLE AND TRIM PLATE MOUNTED IN WALL ABOVE WINDOW.

LEGEND:

- F.1.4 DOOR TYPE, SEE SHEET A9
- A WINDOW TYPE, SEE SHEET A9
- X KEY NOTE
- FEC FIRE EXTINGUISHER CABINET
- 1–HOUR RATED PARTITION
- 2–HOUR RATED PARTITION
- 1 ROOM FINISH TYPE DESIGNATION
- DS METAL DOWNSPOUT

UNLESS OTHERWISE NOTED, LINEAR DIMENSIONS SHOWN ARE IN MILLIMETERS (MM)

0 1000 2000 4000
SCALE: 1: 50

0 2000 4000 8000
SCALE: 1: 100

US Army Corps of Engineers
Afghanistan Engineer District

SYMBOL	DESCRIPTION	DATE	APR

DESIGNED BY: KOB
DATE: 09–30–09
DWN BY: KJG
SUBMITTED BY: BAKER
CHK BY: NLJ
FILE NO.: ANPSDA–101XXX

Michael Baker Jr., Inc.
A unit of Michael Baker Corporation
Airside Business Park
100 Airside Drive
Moon Township PA 15108
www.mbakercorp.com

STANDARD DESIGN
ADMINISTRATION BUILDING – 2–STORY (1446 GSM)
WOOD FIRED HEAT OPTION
FIRST FLOOR PLAN

SHEET REFERENCE NUMBER:
A1

100% SUBMISSION

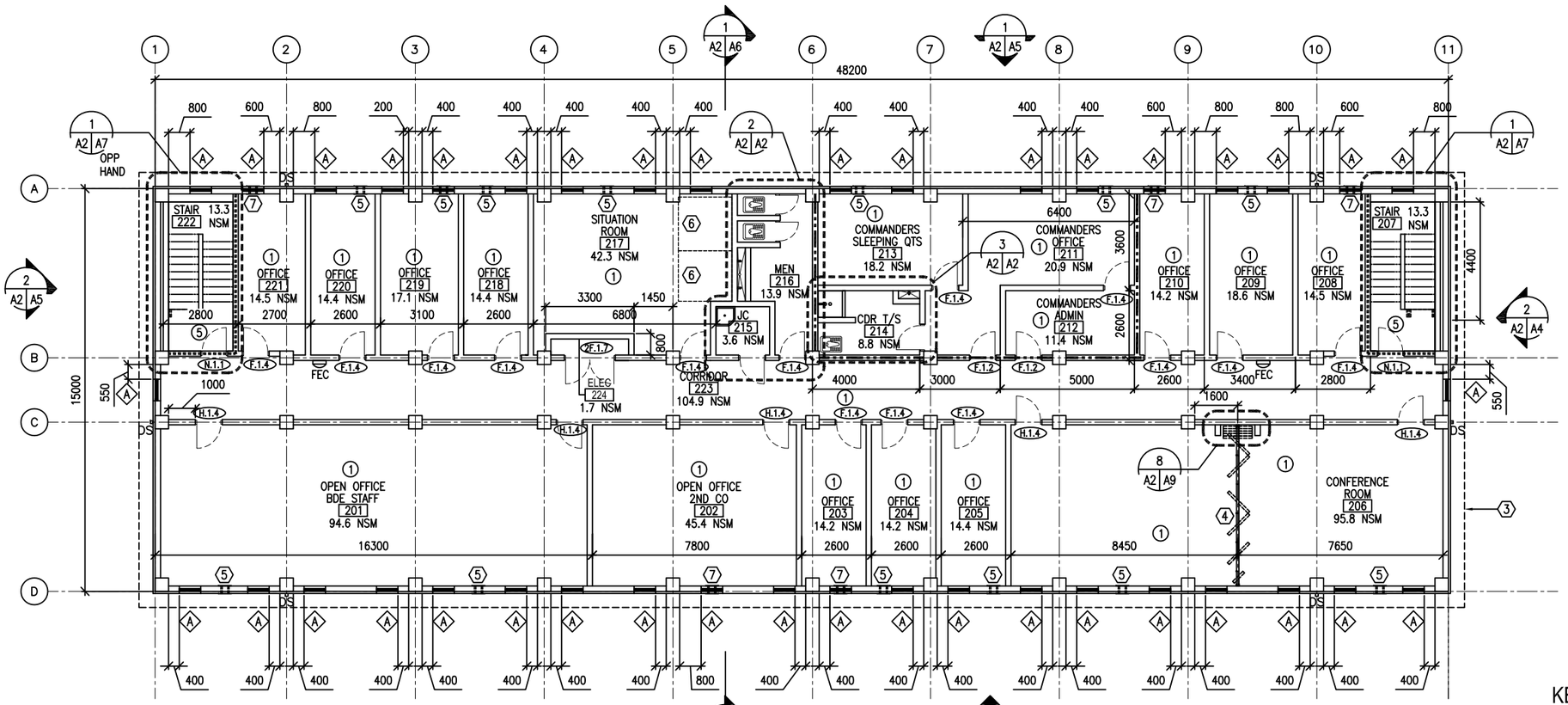

SECOND FLOOR PLAN

SCALE: 1:100

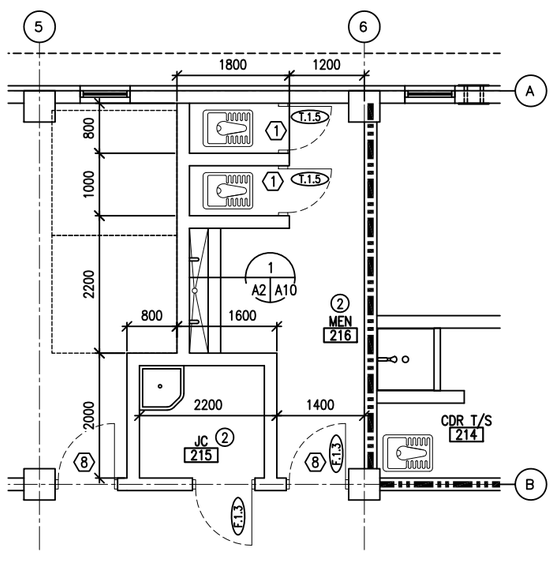

ENLARGED PLAN

SCALE: 1:50

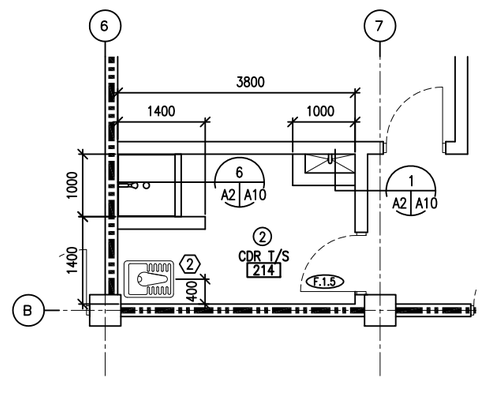

ENLARGED PLAN

SCALE: 1:50

KEY NOTES:

1. TYPICAL TOILET STALL LAYOUT – RE: DETAIL 2/A10
2. TYPICAL TOILET LAYOUT – RE: DETAIL 3/A10
3. LINE OF ROOF OVERHANG ABOVE.
4. OPERABLE PARTITION.
5. TWO-PIECE WALL THIMBLE AND TRIM PLATE FOR OPTIONAL WOOD BURNING STOVE CHIMNEY PIPE. STOVE AND PIPE BY OTHERS.
6. COMMUNICATION RACKS (NIC)
7. TWO-PIECE WALL THIMBLE AND TRIM PLATE MOUNTED IN WALL ABOVE WINDOW.
8. MOUNT DOOR FRAME FLUSH TO COLUMN

ROOM FINISHES:

1. WALLS: PAINTED PLASTER,
   FLOOR: SEALED CONCRETE
   CEILING: PAINTED PLASTER APPLIED TO STRUCTURE
2. WALLS: 2400 MM HIGH CERAMIC TILE WAINSCOT, PAINTED PLASTER ABOVE WAINSCOT
   FLOOR: CERAMIC TILE
   CEILING: PAINTED PLASTER

LEGEND:

- F.1.4 DOOR TYPE, SEE SHEET A9
- A WINDOW TYPE, SEE SHEET A9
- X KEY NOTE
- FEC FIRE EXTINGUISHER CABINET
- 1–HOUR RATED PARTITION
- 2–HOUR RATED PARTITION
- 1 ROOM FINISH TYPE DESIGNATION
- DS METAL DOWNSPOUT

UNLESS OTHERWISE NOTED, LINEAR DIMENSIONS SHOWN ARE IN MILLIMETERS (MM)

0 1000 2000 4000
SCALE: 1: 50

0 2000 4000 8000
SCALE: 1: 100

US Army Corps of Engineers
Afghanistan Engineer District

SYMBOL	DESCRIPTION	DATE	APR

DESIGNED BY: KOB
DATE: 09-30-09
DWN BY: KJG
SUBMITTED BY: BAKER
CHK BY: NLJ
FILE NO.: ANPSDA-102XXX

Michael Baker Jr., Inc
A unit of Michael Baker Corporation
Airside Business Park
100 Airside Drive
Moon Township PA 15108
www.mbakercorp.com

STANDARD DESIGN
ADMINISTRATION BUILDING – 2-STORY (1446 GSM)
WOOD FIRED HEAT OPTION
SECOND FLOOR PLAN

SHEET REFERENCE NUMBER:
A2

100% SUBMISSION

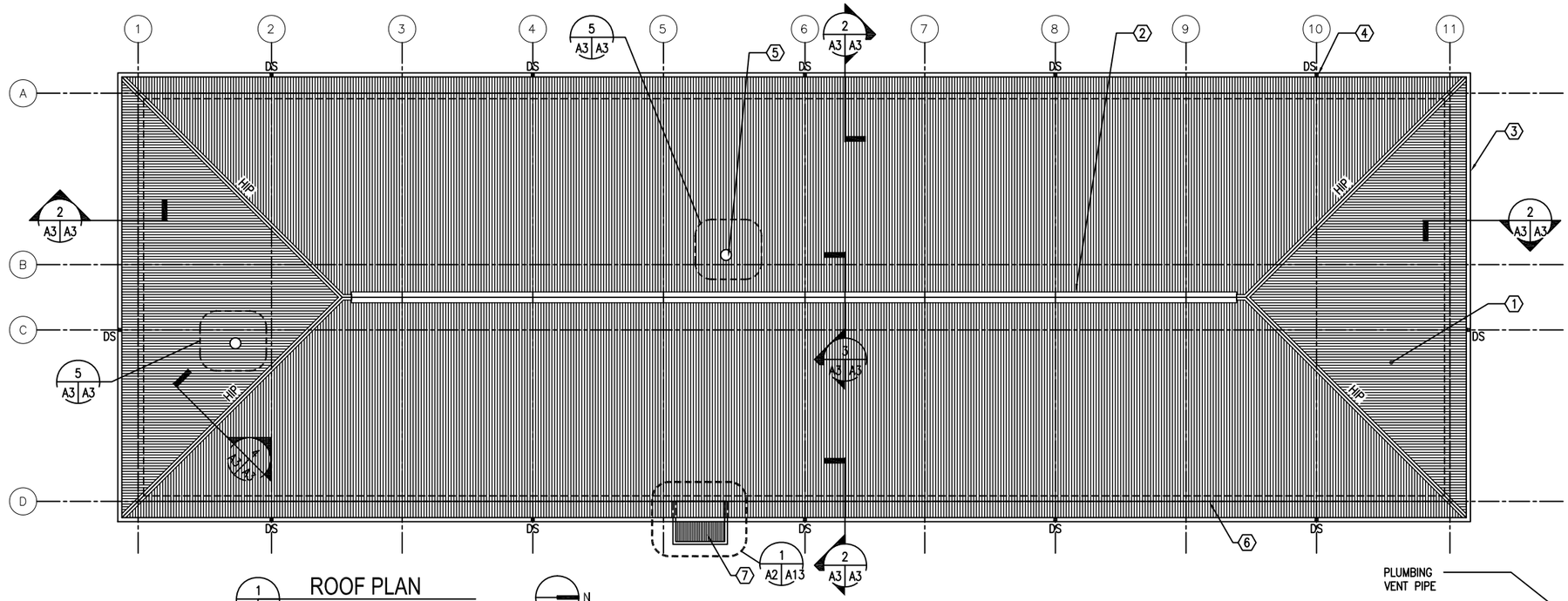

ROOF PLAN

1 A3 A3 — SCALE: 1:100

KEY NOTES:

1. CORRUGATED METAL ROOF PANELS ON COLD-FORMED METAL FRAMING.
2. CONTINUOUS RIDGE VENT
3. METAL GUTTER
4. METAL DOWNSPOUT WITH SPLASH BLOCK
5. ROOF PENETRATION – RE: DETAIL 5/A3
6. LINE OF BUILDING WALL BELOW.
7. METAL CANOPY

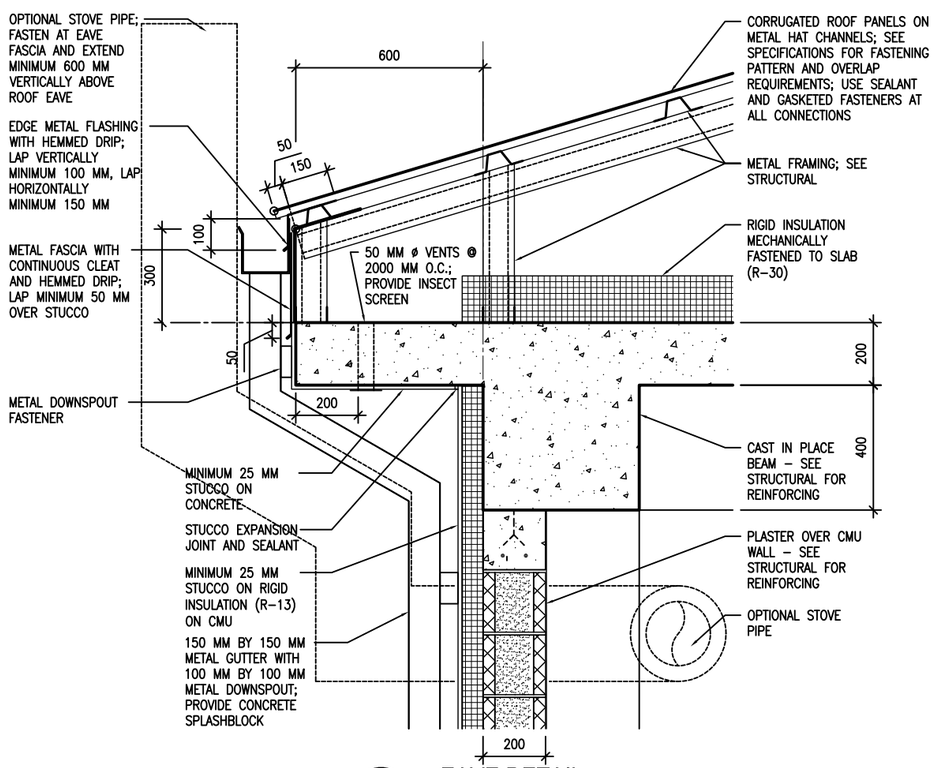

EAVE DETAIL

2 A3 A3 — SCALE: 1:10

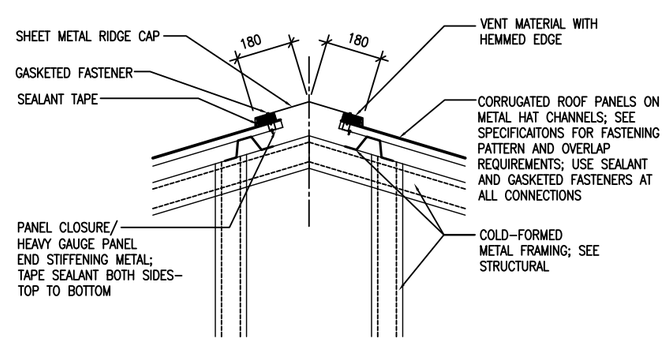

RIDGE VENT DETAIL

3 A3 A3 — SCALE: 1:10

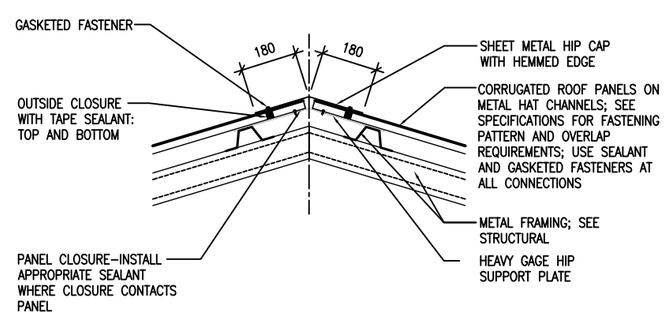

HIP DETAIL

4 A3 A3 — SCALE: 1:10

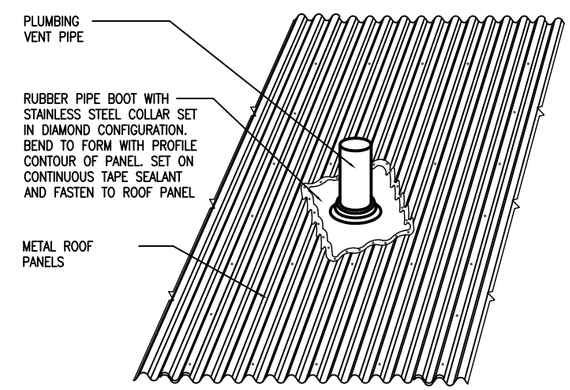

PLUMBING VENT DETAIL

5 A3 A3 — SCALE: NONE

UNLESS OTHERWISE NOTED, LINEAR DIMENSIONS SHOWN ARE IN MILLIMETERS (MM)

0 200 400 800
SCALE: 1: 10

0 2000 4000 8000
SCALE: 1: 100

US Army Corps of Engineers
Afghanistan Engineer District

SYMBOL	DESCRIPTION	DATE	APR

DESIGNED BY: KOB	DATE: 09-30-09	
DWN BY: KJG	SUBMITTED BY: BAKER	
CHK BY: NLJ	FILE NO.: ANPSDA-103XXX	

Michael Baker Jr., Inc
A unit of Michael Baker Corporation
Airside Business Park
100 Airside Drive
Moon Township PA 15108
www.mbakercorp.com

STANDARD DESIGN
ADMINISTRATION BUILDING – 2-STORY (1446 GSM)
WOOD FIRED HEAT OPTION

ROOF PLAN

SHEET REFERENCE NUMBER:
A3

100% SUBMISSION

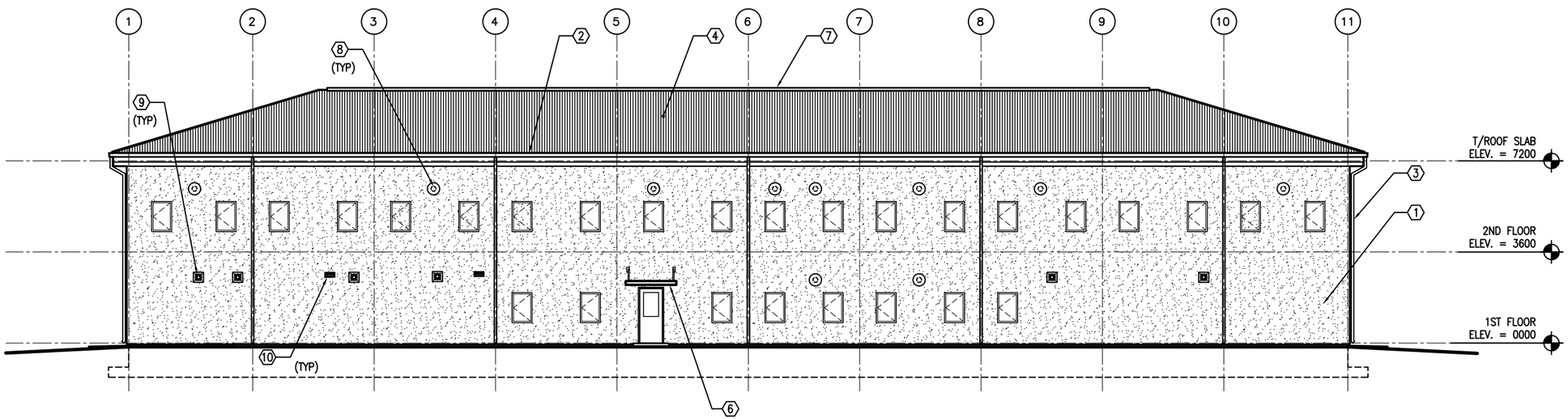

1 A1 A4 EAST ELEVATION
SCALE: 1:100

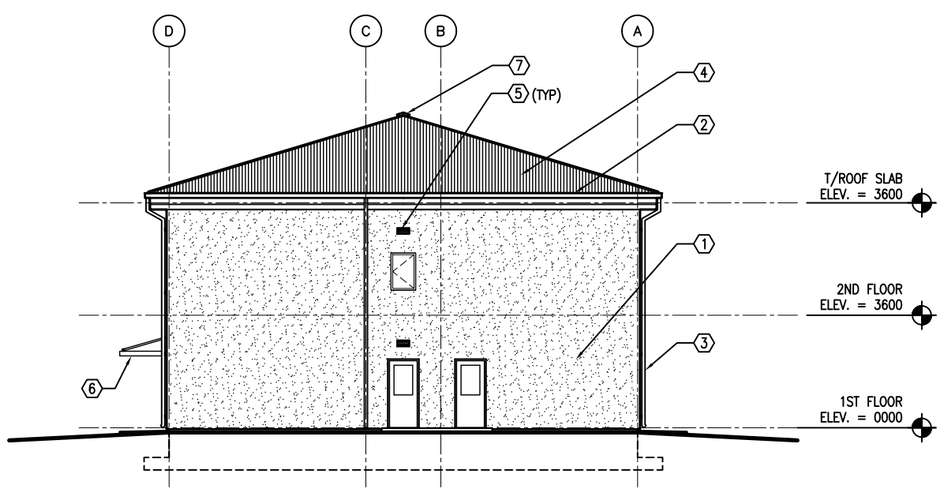

2 A1 A4 NORTH ELEVATION
SCALE: 1:100

KEY NOTES:

1. STUCCO AND RIGID INSULATION SYSTEM OVER CMU AND CONCRETE.
2. METAL GUTTER
3. METAL DOWNSPOUT WITH SPLASH BLOCK
4. CORRUGATED METAL ROOF PANELS ON COLD–FORMED METAL FRAMING.
5. LOUVER – RE: MECH
6. METAL ENTRANCE CANOPY
7. CONTINUOUS RIDGE VENT
8. TWO–PIECE WALL THIMBLE AND TRIM PLATE FOR OPTIONAL WOOD BURNING STOVE CHIMNEY PIPE. STOVE AND PIPE BY OTHERS.
9. EXHAUST FAN – RE: MECH
10. EXHAUST FAN WITH DUCT WALL CAP – RE: MECH

GENERAL NOTES:

1. COORDINATE SIZE AND LOCATION OF OPENINGS FOR MECHANICAL ITEMS WITH MECHANICAL DRAWINGS.
2. PROVIDE STRUCTURAL LINTELS AS REQUIRED – RE: STRUCT

UNLESS OTHERWISE NOTED, LINEAR DIMENSIONS SHOWN ARE IN MILLIMETERS (MM)

0 2000 4000 8000
SCALE: 1: 100

US Army Corps of Engineers
Afghanistan Engineer District

SYMBOL	DESCRIPTION	DATE	APR

DESIGNED BY: KOB
DATE: 09–30–09
DWN BY: KJG
SUBMITTED BY: BAKER
CHK BY: NLJ
FILE NO.: ANPSDA–204XXX

Michael Baker Jr., Inc
A unit of Michael Baker Corporation
Airside Business Park
100 Airside Drive
Moon Township PA 15108
www.mbakercorp.com

STANDARD DESIGN
ADMINISTRATION BUILDING – 2–STORY (1446 GSM)
WOOD FIRED HEAT OPTION

EXTERIOR ELEVATIONS

SHEET REFERENCE NUMBER:
A4

100% SUBMISSION

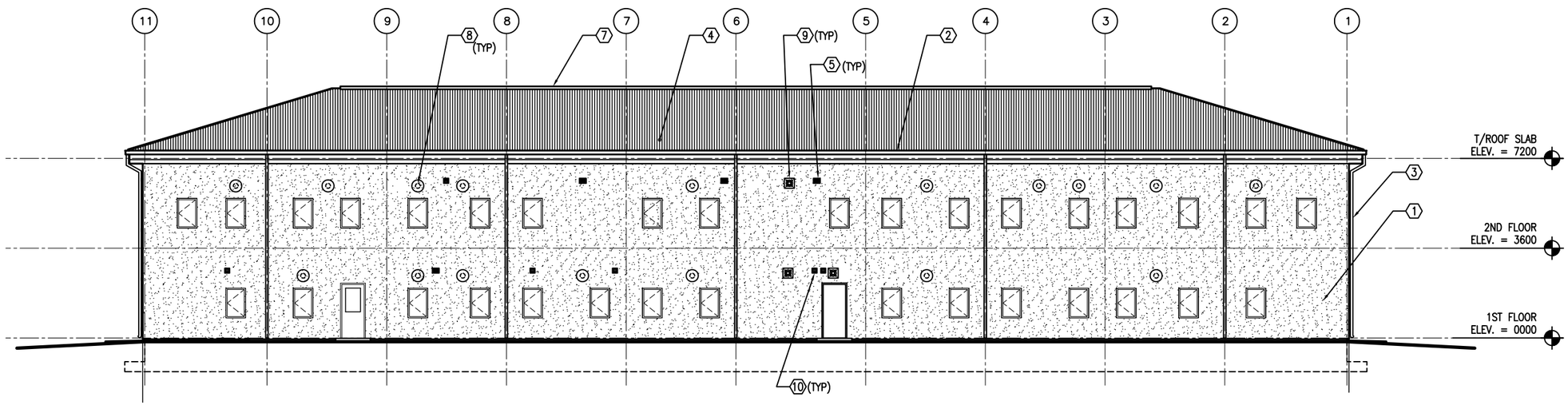

1 A1 A5 WEST ELEVATION

SCALE: 1:100

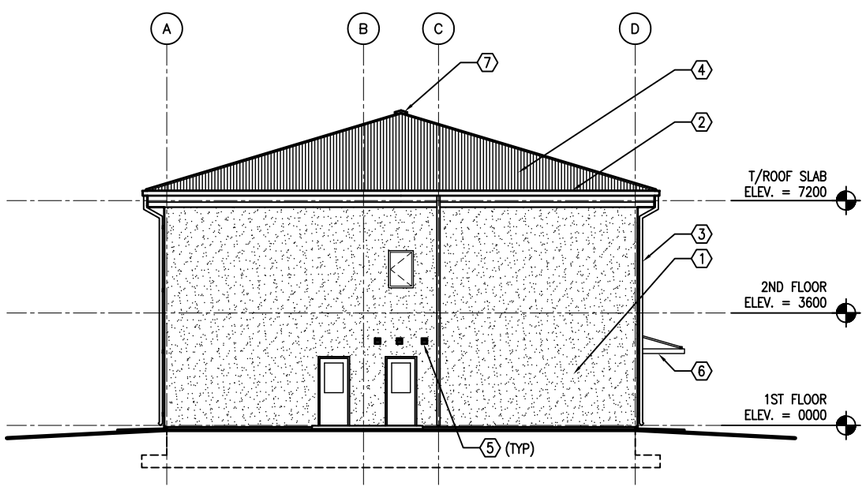

2 A1 A5 SOUTH ELEVATION

SCALE: 1:100

KEY NOTES: (X)

1. STUCCO AND RIGID INSULATION SYSTEM OVER CMU AND CONCRETE.
2. METAL GUTTER
3. METAL DOWNSPOUT WITH SPLASH BLOCK
4. CORRUGATED METAL ROOF PANELS ON COLD–FORMED METAL FRAMING.
5. LOUVER – RE: MECH
6. METAL ENTRANCE CANOPY
7. CONTINUOUS RIDGE VENT
8. TWO–PIECE WALL THIMBLE AND TRIM PLATE FOR OPTIONAL WOOD BURNING STOVE CHIMNEY PIPE. STOVE AND PIPE BY OTHERS.
9. EXHAUST FAN – RE: MECH
10. EXHAUST FAN WITH DUCT WALL CAP – RE: MECH

GENERAL NOTES:

1. COORDINATE SIZE AND LOCATION OF OPENINGS FOR MECHANICAL ITEMS WITH MECHANICAL DRAWINGS.
2. PROVIDE STRUCTURAL LINTELS AS REQUIRED – RE: STRUCT

UNLESS OTHERWISE NOTED, LINEAR DIMENSIONS SHOWN ARE IN MILLIMETERS (MM)

0 2000 4000 8000

SCALE: 1: 100

US Army Corps of Engineers

Afghanistan Engineer District

SYMBOL	DESCRIPTION	DATE	APR

DESIGNED BY: KOB	DATE: 09–30–09	
DWN BY: KJG	SUBMITTED BY: BAKER	
CHK BY: NLJ	FILE NO.: ANPSDA–205XXX	

Michael Baker Jr., Inc
A unit of Michael Baker Corporation
Airside Business Park
100 Airside Drive
Moon Township PA 15108
www.mbakercorp.com

STANDARD DESIGN
ADMINISTRATION BUILDING – 2–STORY (1446 GSM)
WOOD FIRED HEAT OPTION

EXTERIOR ELEVATIONS

SHEET REFERENCE NUMBER:

A5

100% SUBMISSION

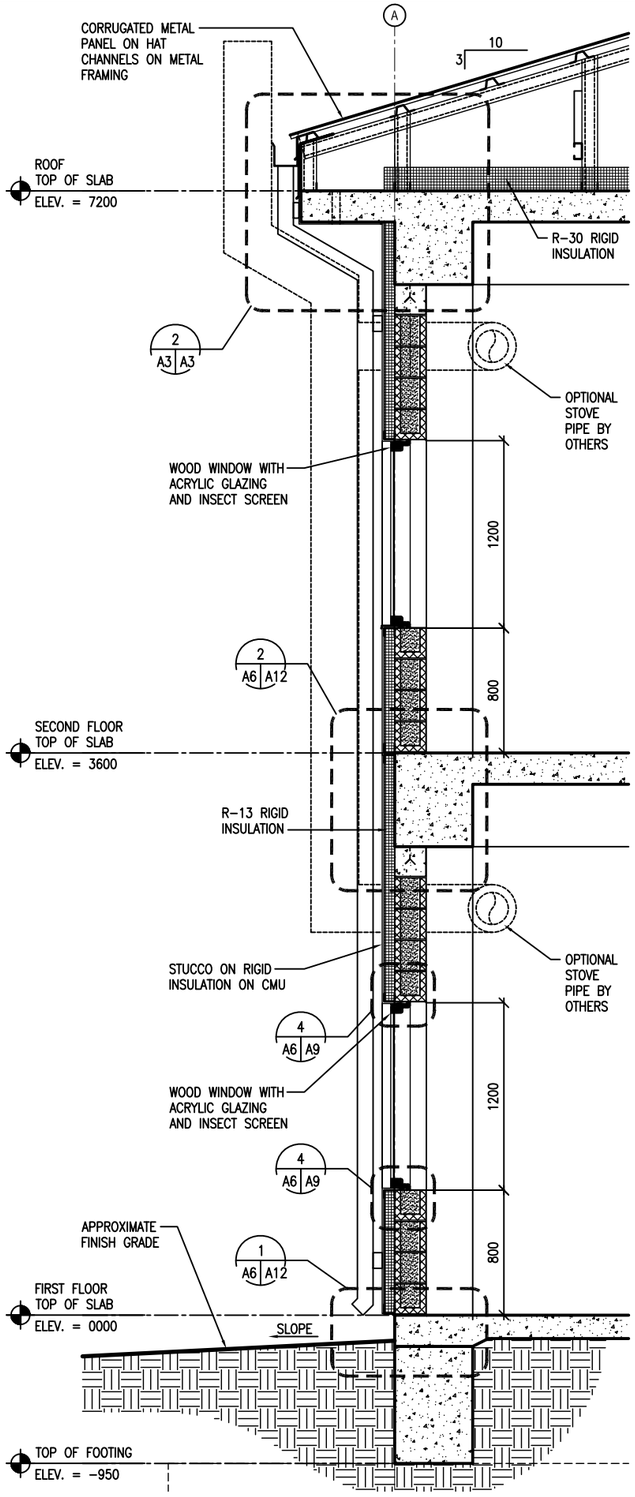

2 A6 A6 WALL SECTION
SCALE: 1:20

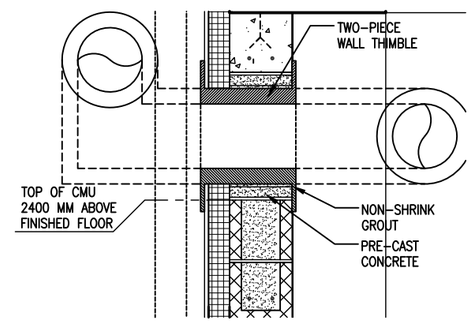

3 A6 A6 THIMBLE DETAIL, TYPICAL
SCALE: 1:10

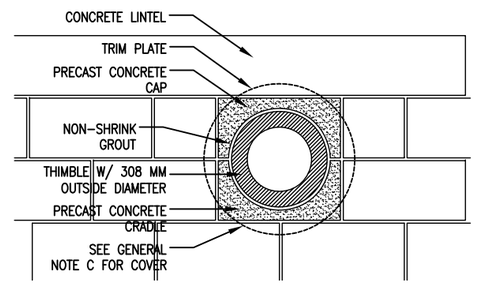

4 A6 A6 THIMBLE DETAIL, TYPICAL
SCALE: 1:10

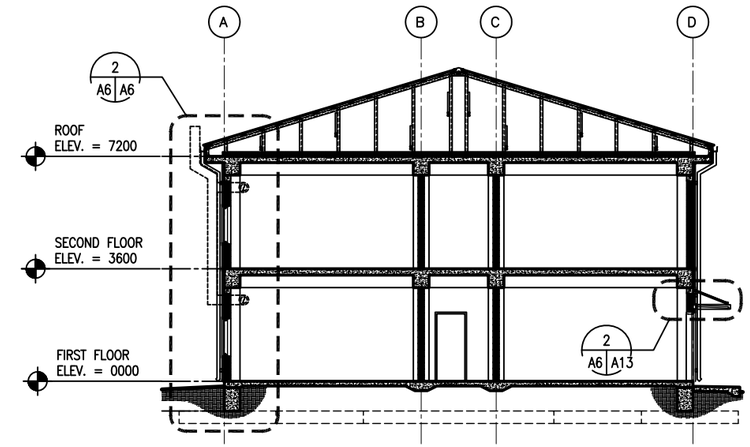

1 A1 A6 BUILDING SECTION
SCALE: 1:100

GENERAL NOTES:

A. COORDINATE SIZE AND LOCATION OF OPENINGS FOR MECHANICAL ITEMS WITH MECHANICAL DRAWINGS.
B. PROVIDE STRUCTURAL LINTELS AS REQUIRED – RE: STRUCT
C. PROVIDE 480 MM SQUARE, 1.5 MM THICK GALVANIZED SHEET METAL COVER WITH 13 MM HEMMED EDGE FOR WALL THIMBLE UNTIL STOVE PIPE IS PROVIDED. INSTALL COVER ON EXTERIOR FACE OF THIMBLE TRIM PLATE. COVER SHALL BE BE SET IN SILICONE SEALANT AND FASTENED WITH 4 STAINLESS STEEL SCREWS. ALIGN FASTENER LOCATIONS WITH COVER PLATE FASTENER OPENINGS SO ADDITIONAL FASTENER PENETRATIONS ARE NOT CREATED IN EXTERIOR FINISH.

UNLESS OTHERWISE NOTED, LINEAR DIMENSIONS SHOWN ARE IN MILLIMETERS (MM)

0 400 800 1600
SCALE: 1: 20

0 2000 4000 8000
SCALE: 1: 100

US Army Corps of Engineers
Afghanistan Engineer District

SYMBOL	DESCRIPTION	DATE	APR

DESIGNED BY: KOB
DATE: 09-30-09
DWN BY: KJG
SUBMITTED BY: BAKER
CHK BY: NLJ
FILE NO.: ANPSDA-306XXX

Michael Baker Jr., Inc.
A unit of Michael Baker Corporation
Airside Business Park
100 Airside Drive
Moon Township PA 15108
www.mbakercorp.com

STANDARD DESIGN
ADMINISTRATION BUILDING – 2-STORY (1446 GSM)
WOOD FIRED HEAT OPTION

BUILDING & WALL SECTIONS

SHEET REFERENCE NUMBER:
A6

100% SUBMISSION

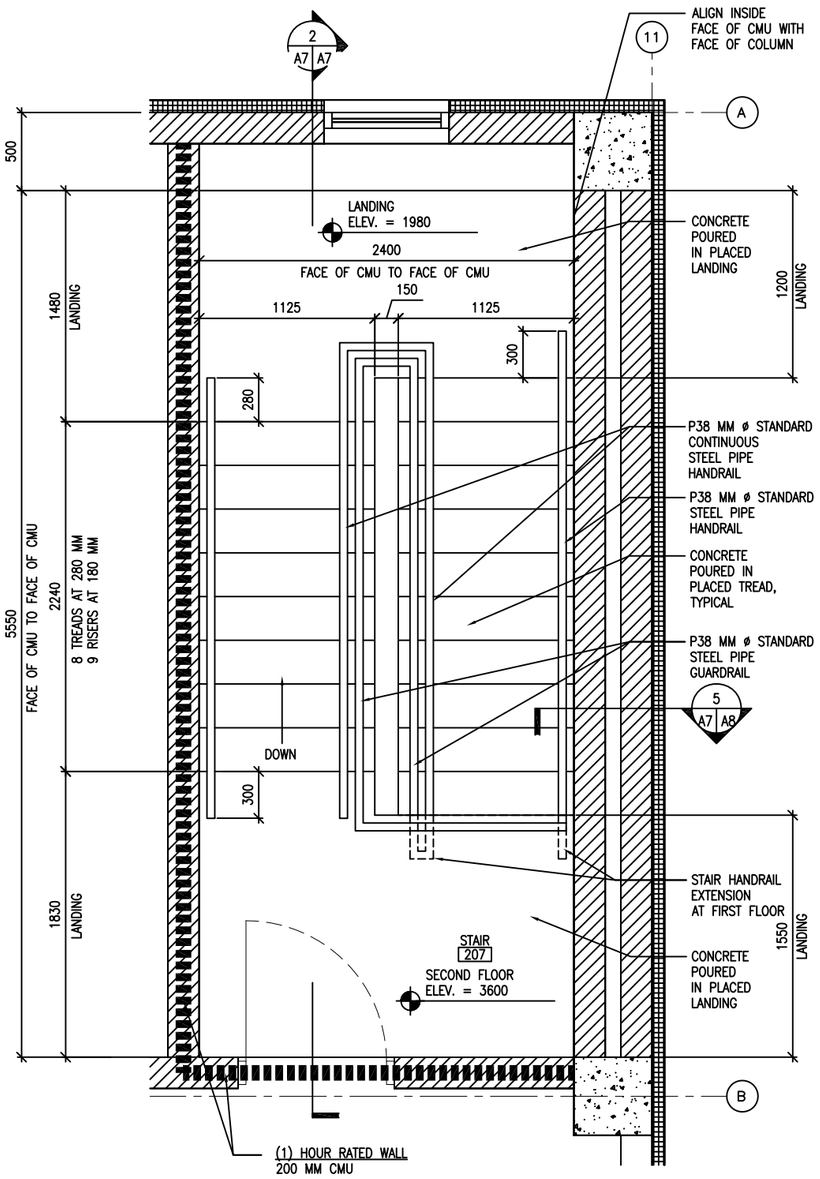

1 A2 A7 STAIR PLAN
SCALE: 1:20

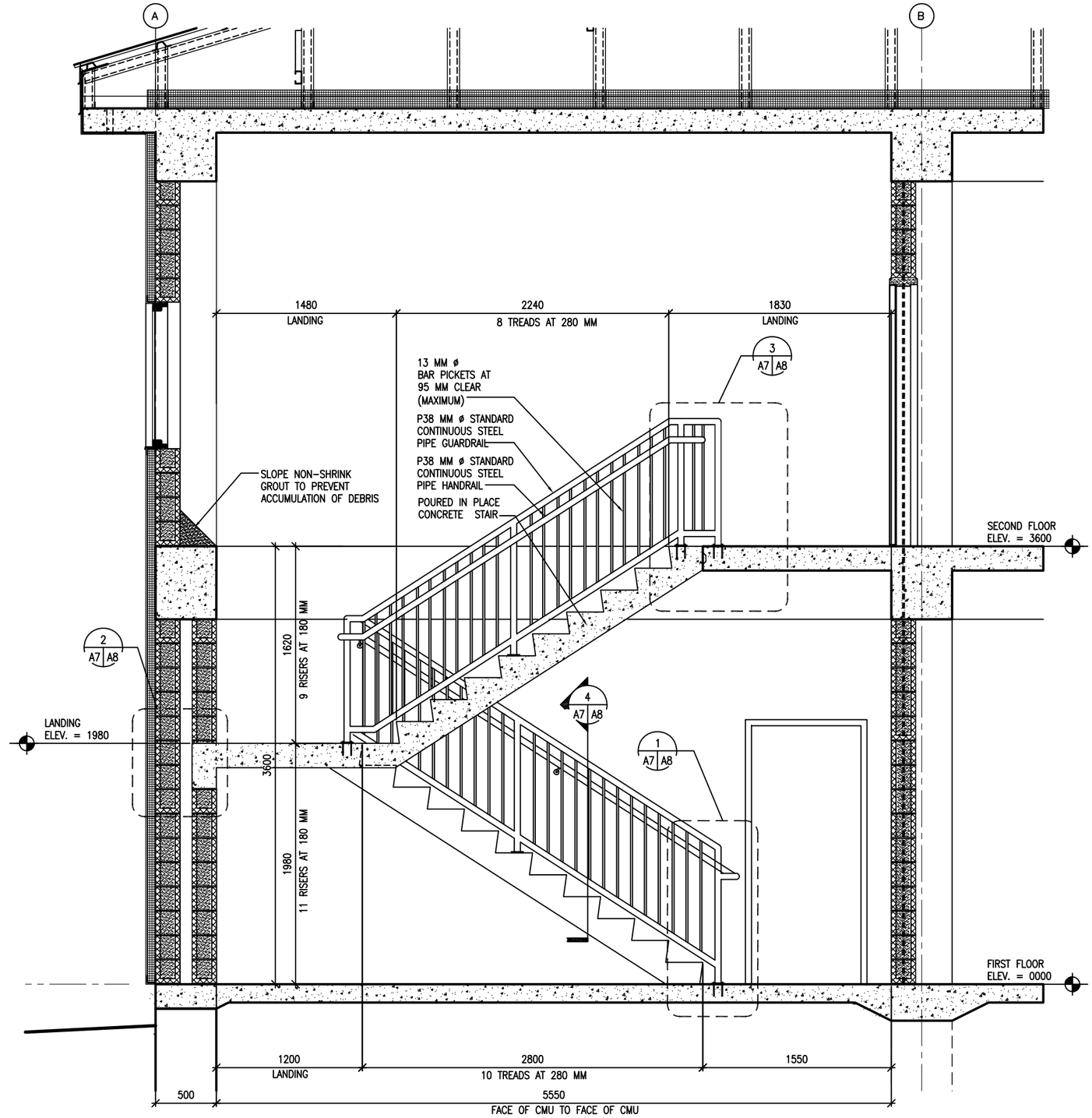

2 A7 A7 STAIR SECTION
SCALE: 1:20

NOTE:
1. STAIR 222 SHALL BE OPPOSITE HAND.

UNLESS OTHERWISE NOTED, LINEAR DIMENSIONS SHOWN ARE IN MILLIMETERS (MM)

0 400 800 1600
SCALE: 1: 20

US Army Corps of Engineers
Afghanistan Engineer District

SYMBOL	DESCRIPTION	DATE	APR

DESIGNED BY: KOB
DATE: 09-30-09
DWN BY: KJG
SUBMITTED BY: BAKER
CHK BY: NLJ
FILE NO.: ANPSDA-307XXX

Michael Baker Jr., Inc.
A unit of Michael Baker Corporation
Airside Business Park
100 Airside Drive
Moon Township PA 15108
www.mbakercorp.com

STANDARD DESIGN
ADMINISTRATION BUILDING - 2-STORY (1446 GSM)
WOOD FIRED HEAT OPTION
STAIR PLAN & SECTION

SHEET REFERENCE NUMBER:
A7

100% SUBMISSION

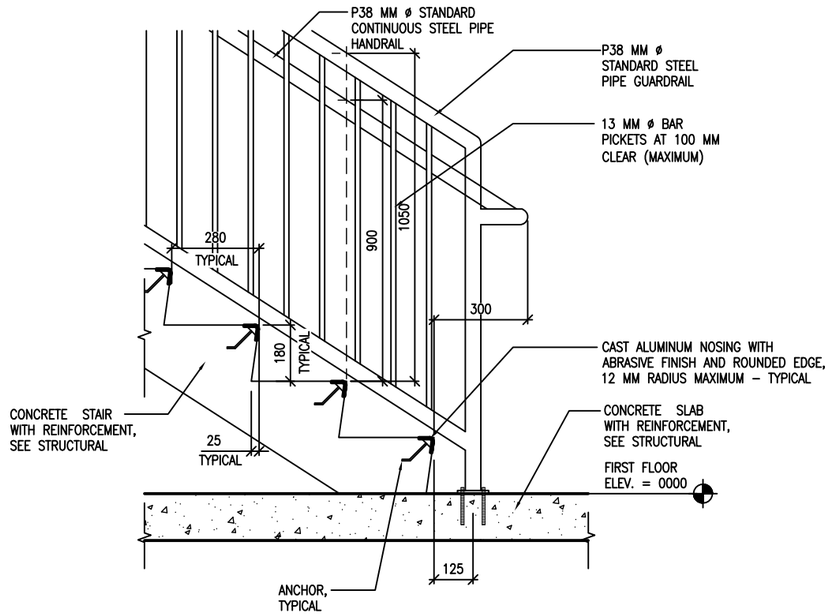

1 A7 A8 BOTTOM LANDING DETAIL

SCALE: 1:10

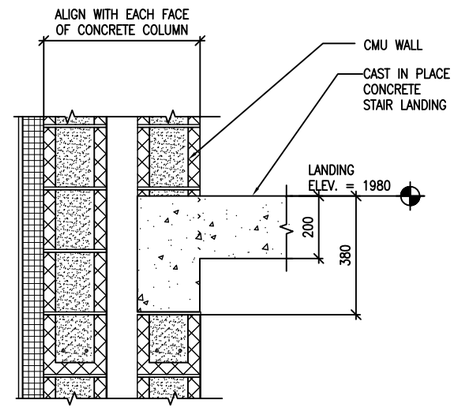

2 A7 A8 INTERMEDIATE LANDING DETAIL

SCALE: 1:10

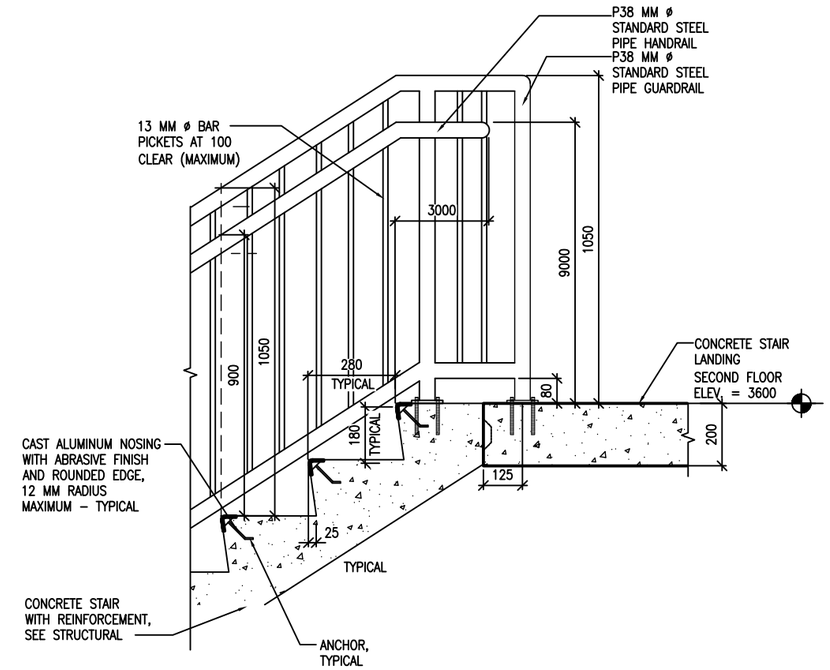

3 A7 A8 TOP LANDING DETAIL

SCALE: 1:10

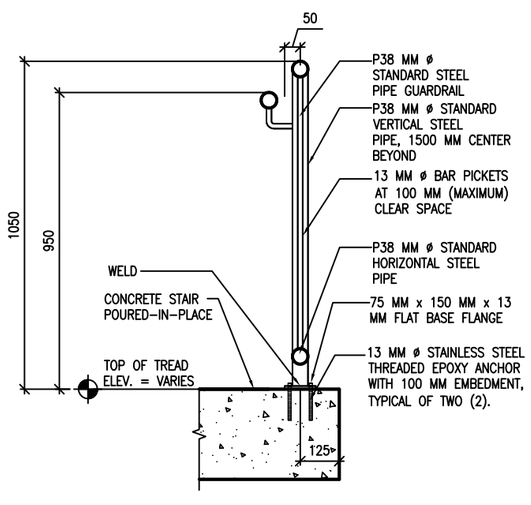

4 A7 A8 GUARDRAIL AND HANDRAIL DETAIL

SCALE: 1:10

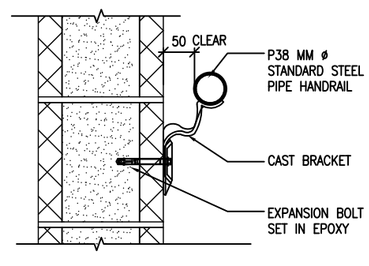

5 A7 A8 WALL MOUNTED HANDRAIL DETAIL

SCALE: 1:5

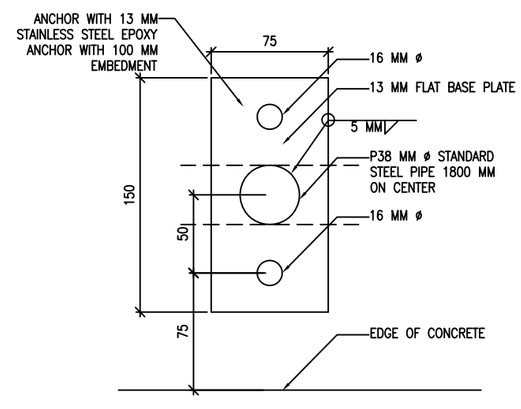

6 A7 A8 RAILING BASE PLATE DETAIL

SCALE: 1:2

UNLESS OTHERWISE NOTED, LINEAR DIMENSIONS SHOWN ARE IN MILLIMETERS (MM)

0 100 200 400

SCALE: 1: 5

0 200 400 800

SCALE: 1: 10

US Army Corps of Engineers

Afghanistan Engineer District

SYMBOL	DESCRIPTION	DATE	APR

DESIGNED BY: KOB
DATE: 09-30-09
DWN BY: KJG
SUBMITTED BY: BAKER
CHK BY: NLJ
FILE NO.: ANPSDA-50BXXX

Michael Baker Jr., Inc.
A unit of Michael Baker Corporation
Airside Business Park
100 Airside Drive
Moon Township PA 15108
www.mbakercorp.com

STANDARD DESIGN
ADMINISTRATION BUILDING – 2-STORY (1446 GSM)
WOOD FIRED HEAT OPTION

STAIR DETAILS

SHEET REFERENCE NUMBER:

A8

100% SUBMISSION

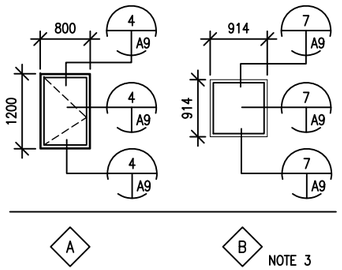

1 A9 A9 WINDOW TYPES
SCALE: 1:50

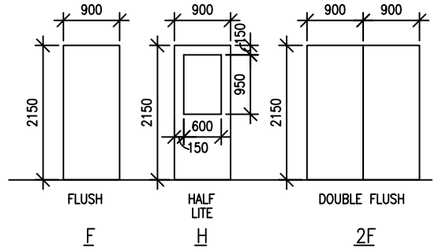

2 A9 A9 DOOR TYPES
SCALE: 1:50

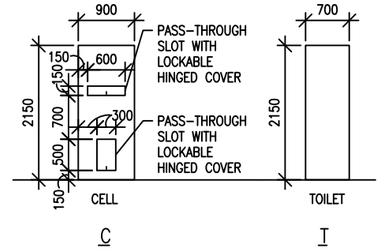

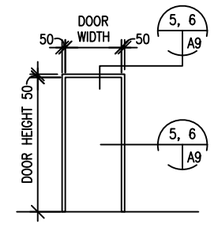

3 A9 A9 FRAME TYPES
SCALE: 1:50

WINDOW TYPES NOTES:

1. ALL EXTERIOR WINDOWS SHALL BE WOOD WITH INSECT SCREENS. WINDOWS SHALL BE COMMERCIAL GRADE.
2. GLAZING SHALL BE ACRYLIC SHEET.
3. WINDOW TYPE B SHALL BE AN INTERIOR FIXED WOOD FRAME WITH ONE WAY VISION GLAZING.

UNLESS OTHERWISE NOTED, LINEAR DIMENSIONS SHOWN ARE IN MILLIMETERS (MM)

0 200 400 800
SCALE: 1: 10

0 1000 2000 4000
SCALE: 1: 50

DOOR TYPES NOTES:

1. INTERIOR AND EXTERIOR METAL DOORS AND FRAME COLORS SHALL MATCH ADJACENT WALL COLORS AS SELECTED BY THE CONTRACTING OFFICER.
2. HARDWARE SHALL BE HEAVY DUTY, COMMERCIAL GRADE, STAINLESS STEEL WITH A MATTE FINISH.
3. FRAMES, EXCEPT FIRE-RATED FRAMES, SHALL BE MOUNTED AND ADJUSTED IN ACCORDANCE WITH MANUFACTURER'S INSTRUCTIONS. FRAMES SHALL BE FASTENED WITH MINIMUM OF THREE FASTENING POINTS PER SIDE AT REGULAR INTERVALS.
4. DIMENSIONS SHOWN ON DOOR SCHEDULE ARE BASED UPON MODULAR MASONRY (OR ROUGH OPENING), HEIGHT OF 2200mm FOR STANDARD PERSONNEL DOORS. CONTRACTOR SHALL COORDINATE WITH DOOR SUPPLIER TO ENSURE THAT DIMENSIONS OF DOORS AND FRAMES PROVIDED ARE COMPATIBLE WITH DOOR OPENING DIMENSIONS.
5. DOORS IN 2 HOUR RATED PARTITIONS SHALL BE 1.5 HOUR RATED DOORS IN ACCORDANCE WITH NFPA 101, TABLE 8.3.4.2.
6. DOORS AT STAIR ENCLOSURES SHALL BE 1 HOUR RATED AT 1 HOUR WALL IN ACCORDANCE WITH NFPA 101, TABLE 8.3.4.2.
7. DOORS IN OTHER 1 HOUR RATED WALLS SHALL BE 3/4 HOUR RATED DOORS IN ACCORDANCE WITH NFPA 101, TABLE 8.3.4.2.

DOOR TYPE — 2F.1.5 — HDW TYPE
FRAME TYPE

DOOR HARDWARE TYPES:

HW-1 1-1/2 PR HINGES
1 EA EXIT DEVICE, SURFACE MOUNTED F08
1 EA CYLINDER. GRADE 1
1 EA DOOR CLOSER, C02061,LOW RESISTANCE
1 EA THRESHOLD J32130

HW-2 1-1/2 PR HINGES
1 EA LOCKSET W/LEVERS. GRADE 1 F93
1 EA DOOR CLOSER, C02061,LOW RESISTANCE

HW-3 1-1/2 PR HINGES, A8112
1 EA LOCKSET W/LEVERS. GRADE 1
1 EA DOOR CLOSER, C02061,LOW RESISTANCE
1 EA DOOR STOP, L02101 OR L02161
1 EA KICKPLATE, J102
1 EA MOP PLATE, J103

HW-4 1-1/2 PR HINGES
1 EA LOCKSET W/LEVERS. GRADE 1
1 EA STOP L02101 OR L02161

HW-5 1-1/2 PR HINGES, A8112
1 EA LOCKSET W/LEVERS. GRADE 1
1 EA DOOR STOP, L02101 OR L02161
2 EA MOP PLATE, J103

HW-6 1-1/2 PR HINGES
1 EA LOCKSET,F93 ENTRY LOCK W/LEVERS. GRADE 1
1 EA DOOR CLOSER, C02061,LOW RESISTANCE
1 EA THRESHOLD J32130

HW-7 3 PR HINGES
1 EA LOCKSET,F93 ENTRY LOCK W/LEVERS. GRADE 1
1 EA DOOR CLOSER, C02061,LOW RESISTANCE
2 EA FLUSHBOLTS
1 EA REMOVABLE ASTRAGAL

HW-8 1-1/2 PR HINGES, A8181
1 EA LOCKSET, F87 GRADE 1 LOCK W/LEVERS

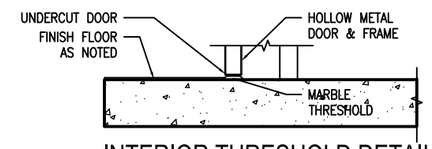

9 A9 A9 INTERIOR THRESHOLD DETAIL @ TOILET & JANITOR'S CLOSET
SCALE: 1:10

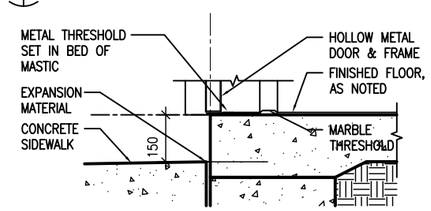

10 A9 A9 EXTERIOR THRESHOLD DETAIL @ WATER HEATER
SCALE: 1:10

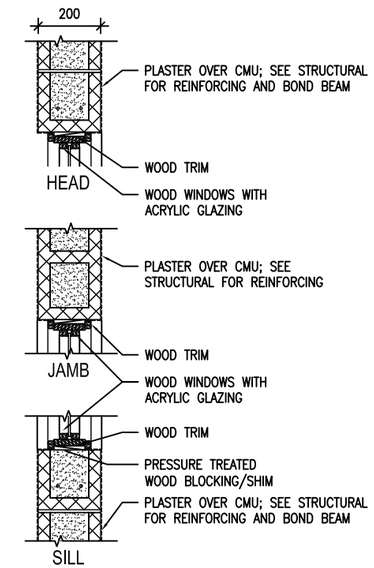

7 A9 A9 INTERIOR WINDOW DETAILS
SCALE: 1:10

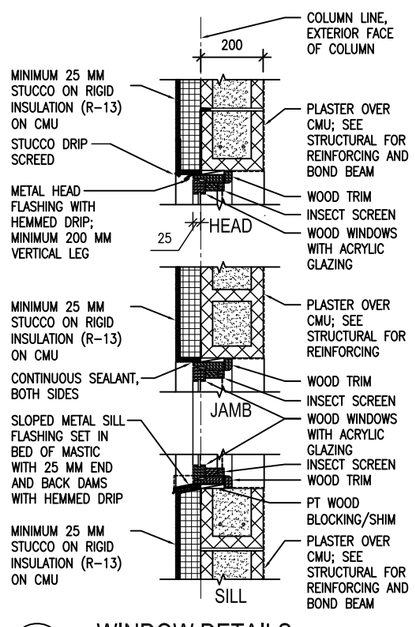

4 A9 A9 WINDOW DETAILS
SCALE: 1:10

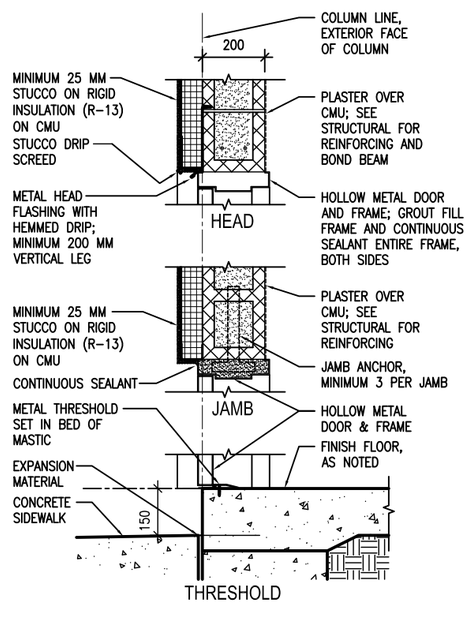

5 A9 A9 EXTERIOR DOOR DETAILS
SCALE: 1:10

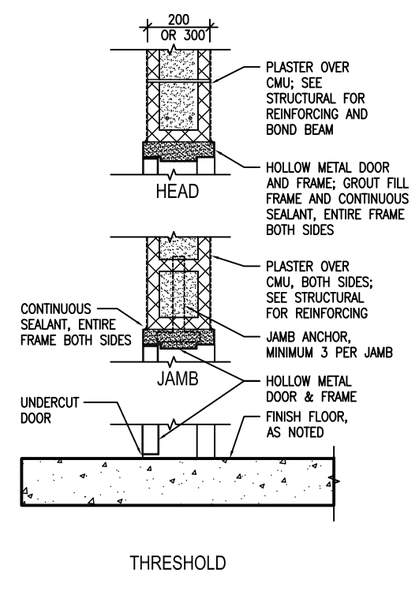

6 A9 A9 INTERIOR DOOR DETAILS
SCALE: 1:10

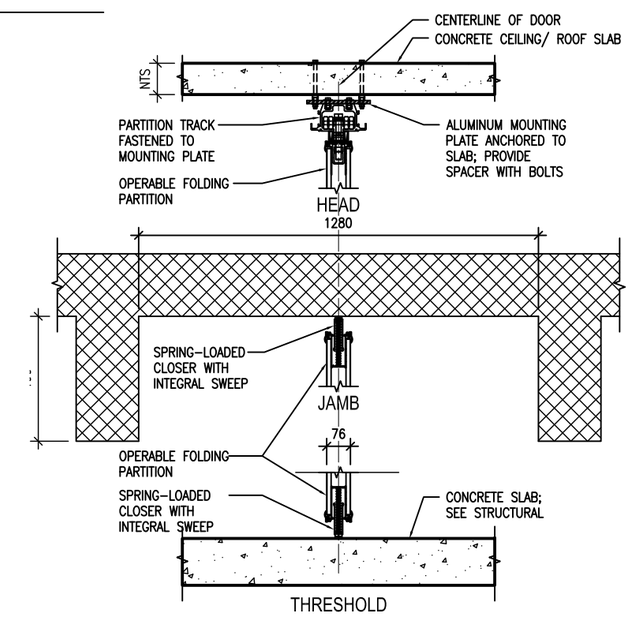

8 A9 A9 OPERABLE PARTITION DOOR DETAILS
SCALE: 1:10

US Army Corps of Engineers
Afghanistan Engineer District

SYMBOL	DESCRIPTION	DATE	APR

DESIGNED BY: KOB
DATE: 09-30-09
DWN BY: KJG
SUBMITTED BY: BAKER
CHK BY: NLJ
FILE NO.: ANPSDA-509XXX

Michael Baker Jr., Inc.
A unit of Michael Baker Corporation
Airside Business Park
100 Airside Drive
Moon Township PA 15108
www.mbakercorp.com

STANDARD DESIGN
ADMINISTRATION BUILDING – 2-STORY (1446 GSM)
WOOD FIRED HEAT OPTION

DOOR, WINDOW & FINISH TYPES & DETAILS

SHEET REFERENCE NUMBER:
A9

100% SUBMISSION

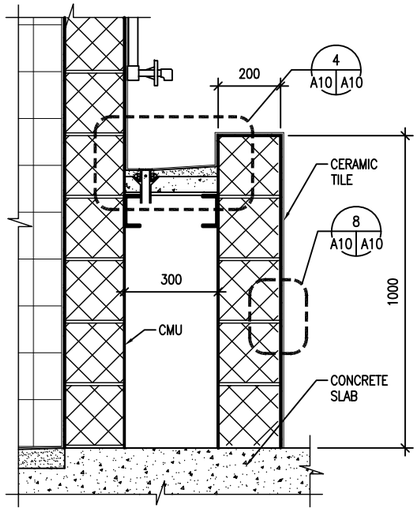

1 A1 A10 LAVATORY SECTION
SCALE: 1:10

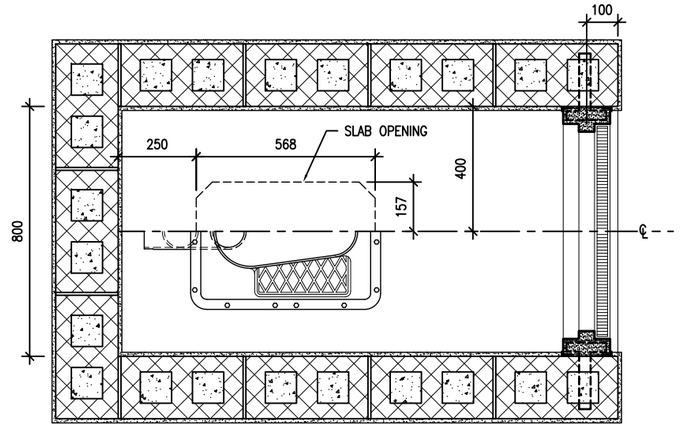

2 A1 A10 TYPICAL TOILET STALL DETAIL
SCALE: 1:10
ZURN Z1290 EASTERN STYLE WATER CLOSET

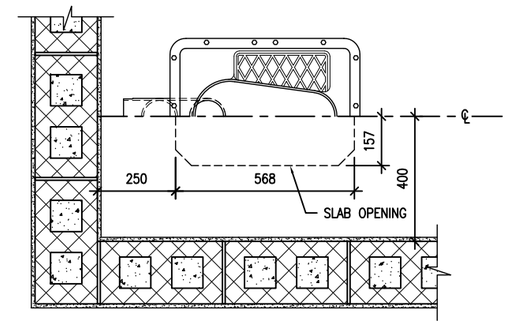

3 A1 A10 TYPICAL TOILET DETAIL
SCALE: 1:10
ZURN Z1290 EASTERN STYLE WATER CLOSET

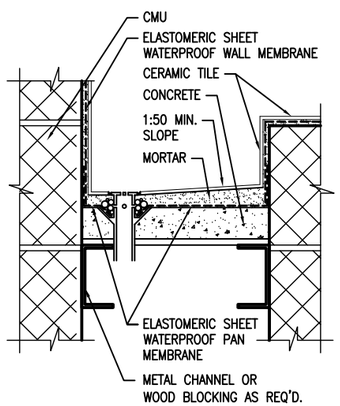

4 A10 A10 LAVATORY DETAIL
SCALE: NTS
NOTE: WALL MEMBRANE LAPS OVER PAN MEMBRANE
TCA METHOD: B417

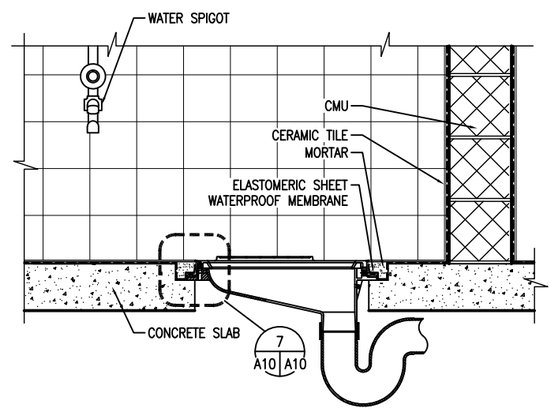

5 A10 A10 THIN SET LATRINE
SCALE: 1:10

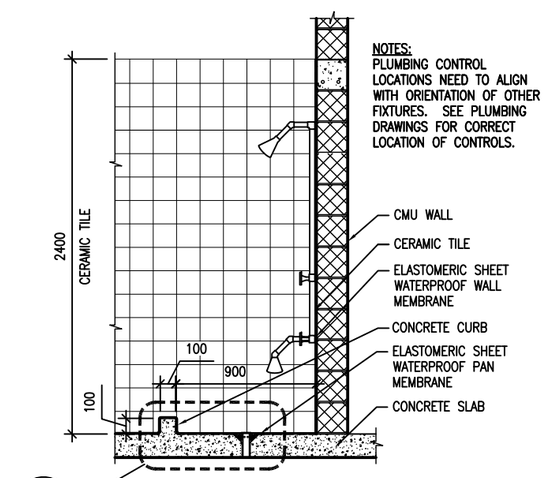

6 A1 A10 THIN SET SHOWER
SCALE: 1:20

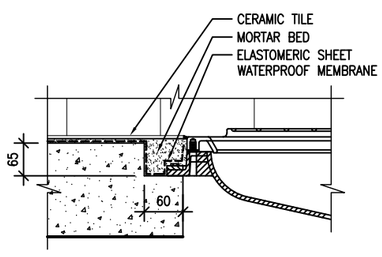

7 A10 A10 MOUNTING DETAIL
SCALE: NTS

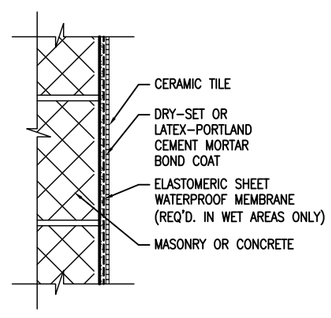

8 A10 A10 WALL DETAIL
SCALE: NTS
TCA METHOD: W222

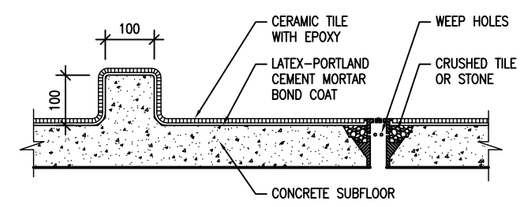

9 A10 A10 THIN SET CURB
SCALE: NTS
TCA METHOD: F115

UNLESS OTHERWISE NOTED, LINEAR DIMENSIONS SHOWN ARE IN MILLIMETERS (MM)

0 200 400 800
SCALE: 1: 10

0 400 800 1600
SCALE: 1: 20

US Army Corps of Engineers
Afghanistan Engineer District

SYMBOL	DESCRIPTION	DATE	APR

DESIGNED BY: KOB
DATE: 09-30-09
DWN BY: KJG
SUBMITTED BY: BAKER
CHK BY: NLJ
FILE NO.: ANPSDA-510XXX

Michael Baker Jr., Inc.
A unit of Michael Baker Corporation
Airside Business Park
100 Airside Drive
Moon Township PA 15108
www.mbakercorp.com

STANDARD DESIGN
ADMINISTRATION BUILDING – 2-STORY (1446 GSM) WOOD FIRED HEAT OPTION
LATRINE AND SHOWER DETAILS

SHEET REFERENCE NUMBER:
A10

100% SUBMISSION

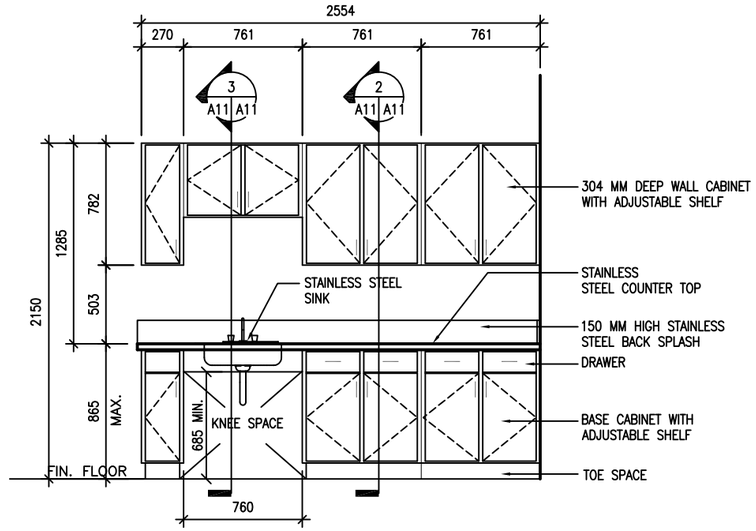

1 A1 A11 CABINET ELEVATION
SCALE: 1:20

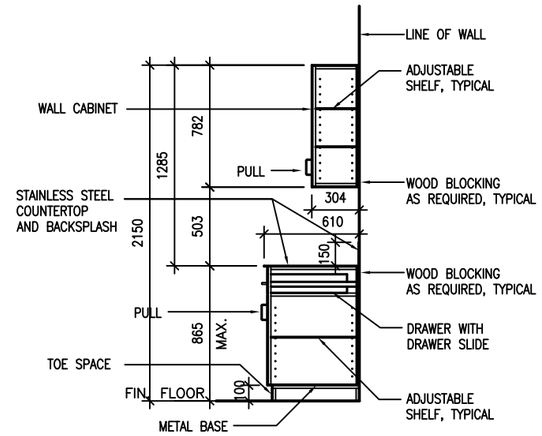

2 A11 A11 CABINET SECTION
SCALE: 1:20

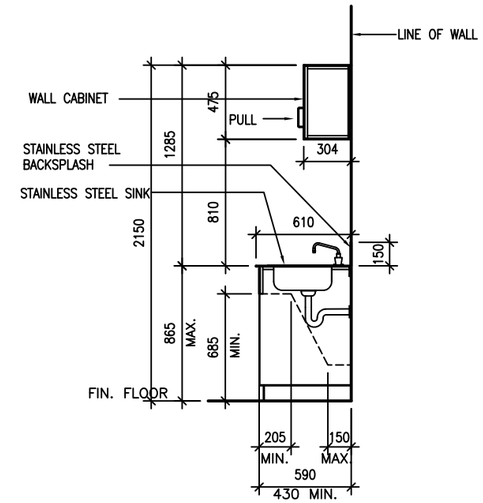

3 A11 A11 CABINET SECTION
SCALE: 1:20

GENERAL NOTES:

1. VERIFY ALL CLEARANCES BEFORE CABINETS ARE CONSTRUCTED
2. COORDINATE SINK CUT OUT WITH PLUMBING.
3. CASEWORK SHALL BE A HEAVY GAUGE STEEL FULL-FRAME CONSTRUCTION.
4. CASEWORK SHALL BE PRIME GRADE, COLD-ROLLED, STANDARD STEEL SHEET WITH NO RAGGED EDGES.
5. ALL STEEL SHALL BE PAINTED, EXCEPT STAINLESS STEEL COUNTERTOP AND BACK SPLASH.

UNLESS OTHERWISE NOTED, LINEAR DIMENSIONS SHOWN ARE IN MILLIMETERS (MM)

0 400 800 1600
SCALE: 1: 20

US Army Corps of Engineers
Afghanistan Engineer District

SYMBOL	DESCRIPTION	DATE	APR

DESIGNED BY: KOB
DATE: 09-30-09
DWN BY: KJG
SUBMITTED BY: BAKER
CHK BY: NLJ
FILE NO.: ANPSDA-511XXX

Michael Baker Jr., Inc.
A unit of Michael Baker Corporation
Airside Business Park
100 Airside Drive
Moon Township PA 15108
www.mbakercorp.com

STANDARD DESIGN
ADMINISTRATION BUILDING - 2-STORY (1446 GSM)
WOOD FIRED HEAT OPTION

CASEWORK ELEVATIONS, SECTIONS & DETAILS

SHEET REFERENCE NUMBER:
A11

100% SUBMISSION

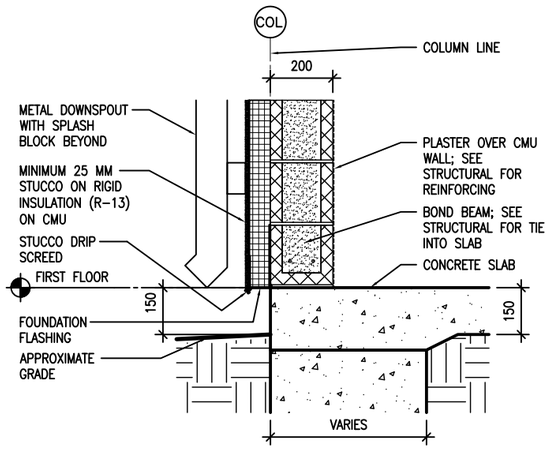

1 A6 A12 STUCCO BASE DETAIL

SCALE: 1:10

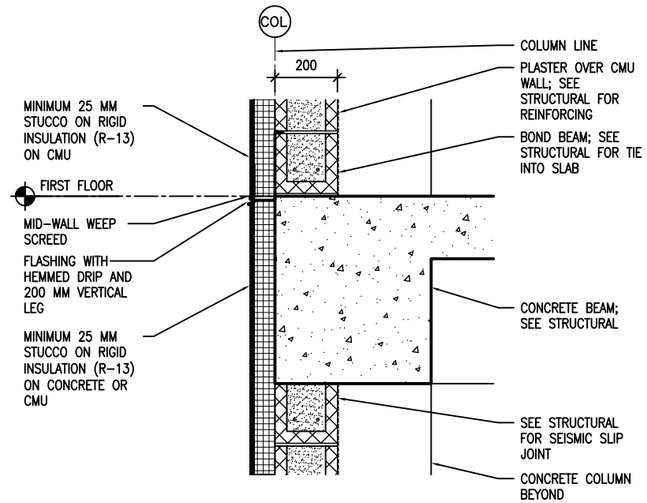

2 A6 A12 STUCCO JOINT DETAIL

SCALE: 1:10

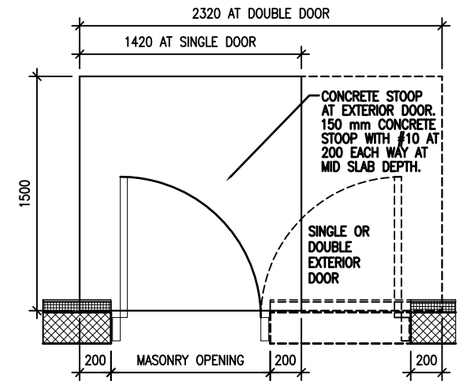

3 A1 A12 CONCRETE STOOP PLAN DETAIL

SCALE: 1:20

UNLESS OTHERWISE NOTED, LINEAR DIMENSIONS SHOWN ARE IN MILLIMETERS (MM)

0 200 400 800

SCALE: 1: 10

0 400 800 1600

SCALE: 1: 20

US Army Corps of Engineers

Afghanistan Engineer District

SYMBOL	DESCRIPTION	DATE	APR

DESIGNED BY: KOB	DATE: 09-30-09
DWN BY: KJG	SUBMITTED BY: BAKER
CHK BY: NLJ	FILE NO.: ANPSDA-512XXX

Michael Baker Jr., Inc.
A unit of Michael Baker Corporation
Airside Business Park
100 Airside Drive
Moon Township PA 15108
www.mbakercorp.com

STANDARD DESIGN
ADMINISTRATION BUILDING – 2-STORY (1446 GSM)
WOOD FIRED HEAT OPTION

SECTION DETAILS

SHEET REFERENCE NUMBER:

A12

100% SUBMISSION

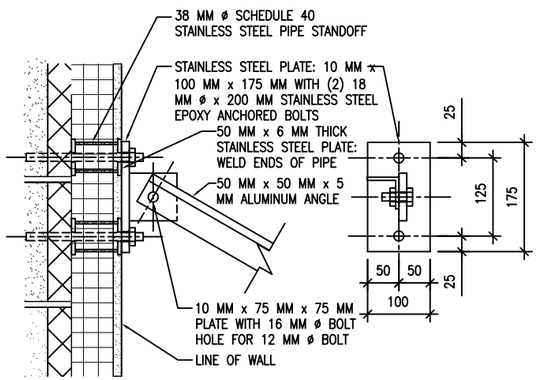

3 A13 A13 TOP CONNECTION DETAIL
SCALE: 1:5

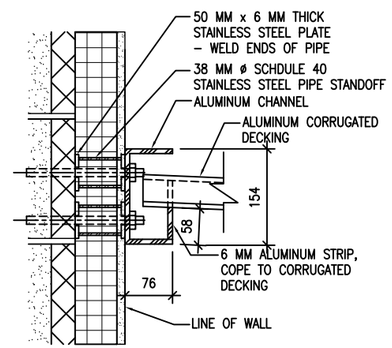

4 A13 A13 BOTTOM CONNECTION DETAIL
SCALE: 1:5

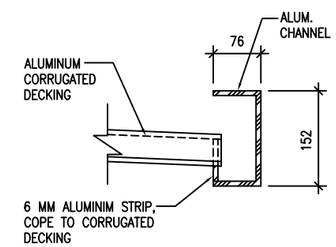

5 A13 A13 FRONT SECTION
SCALE: 1:5

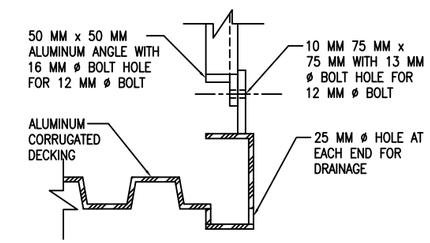

6 A13 A13 SIDE SECTION
SCALE: 1:5 1 AS SHOWN 1 OPP. HAND

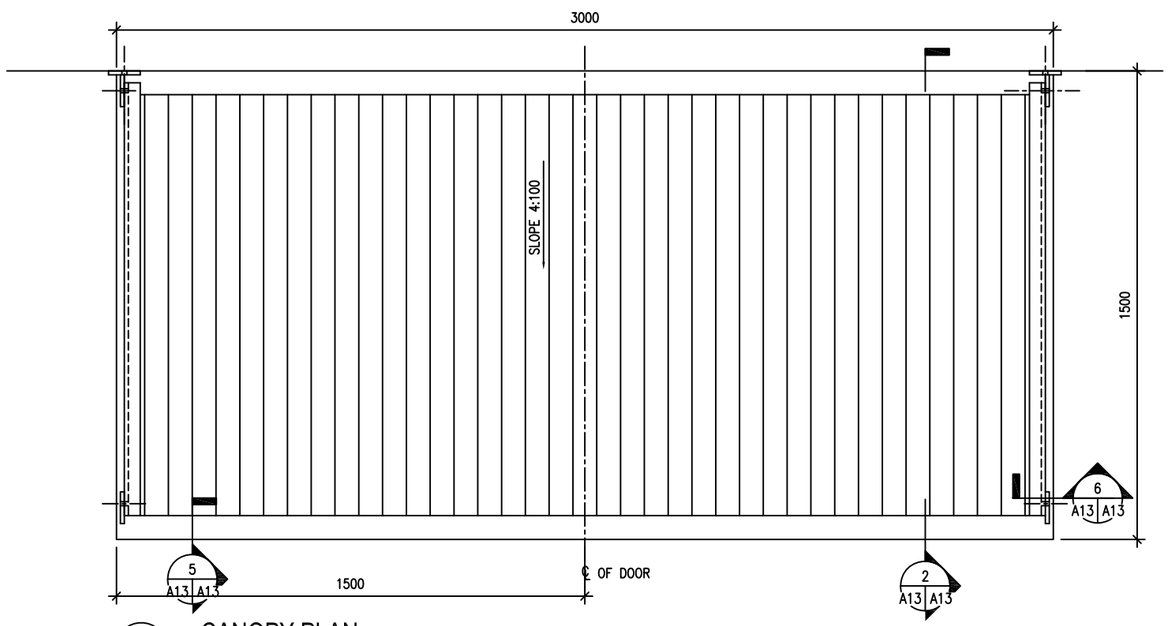

1 A1 A13 CANOPY PLAN
SCALE: 1:10

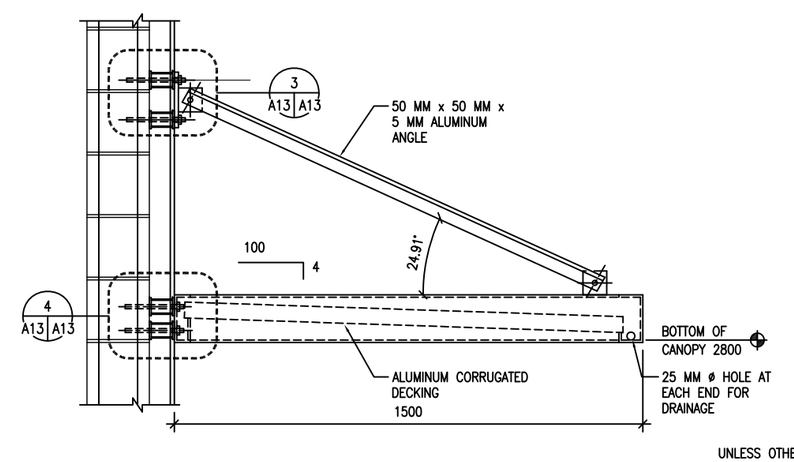

2 A13 A13 CANOPY SECTION
SCALE: 1:10

UNLESS OTHERWISE NOTED, LINEAR DIMENSIONS SHOWN ARE IN MILLIMETERS (MM)

0 100 200 400
SCALE: 1: 5

0 2 2000 800
SCALE: 1: 10

US Army Corps of Engineers
Afghanistan Engineer District

SYMBOL	DESCRIPTION	DATE	APR

DESIGNED BY: KOB	DATE: 09-30-09	
DWN BY: KJG	SUBMITTED BY: BAKER	
CHK BY: NLJ	FILE NO.: ANPSDA-513XXX	

Michael Baker Jr., Inc.
A unit of Michael Baker Corporation
Airside Business Park
100 Airside Drive
Moon Township PA 15108
www.mbakercorp.com

STANDARD DESIGN
ADMINISTRATION BUILDING – 2-STORY (1446 GSM)
WOOD FIRED HEAT OPTION

MISCELLANEOUS DETAILS

SHEET REFERENCE NUMBER:
A13

100% SUBMISSION

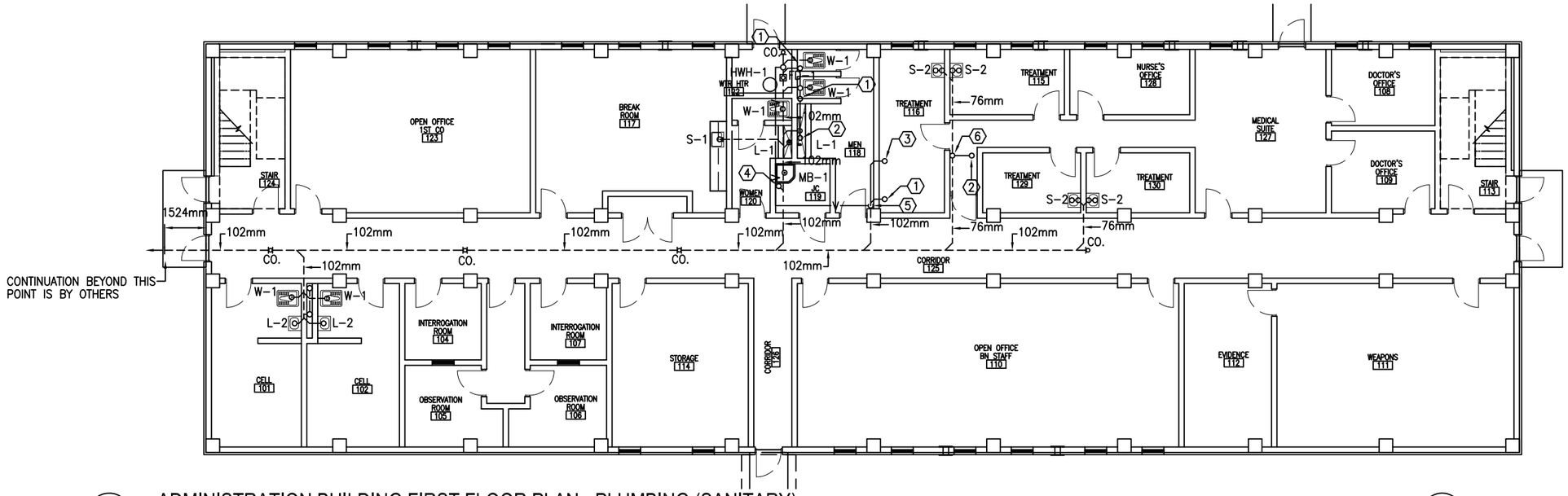

1 P1 P1 ADMINISTRATION BUILDING FIRST FLOOR PLAN - PLUMBING (SANITARY)

SCALE: 1:100

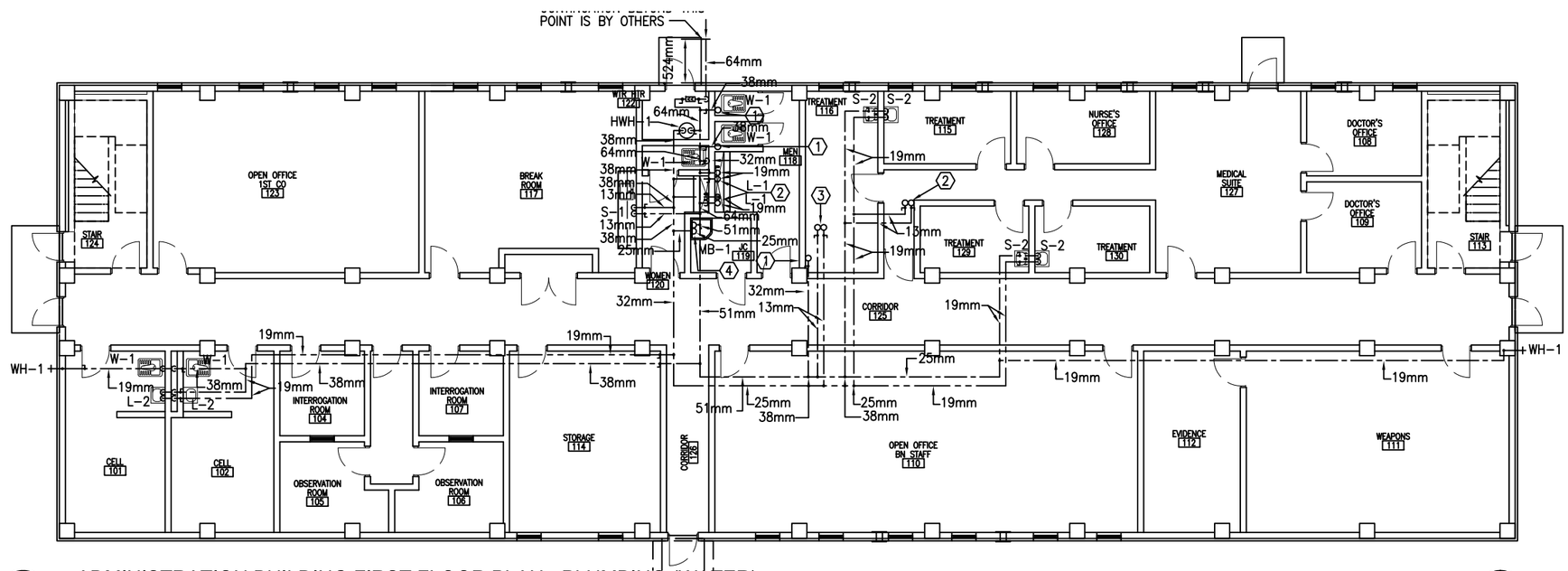

2 P1 P1 ADMINISTRATION BUILDING FIRST FLOOR PLAN - PLUMBING (WATER)

SCALE: 1:100

SANITARY KEY NOTES:

1. 102mm SANITARY LINE FROM EASTERN STYLE WATER CLOSET ON 2nd FLOOR.
2. 76mm SANITARY LINE FROM TROUGH ON 2nd FLOOR.
3. 76mm SANITARY LINE FROM SHOWER ON 2nd FLOOR.
4. 76mm SANITARY LINE FROM MOP BASIN ON 2nd FLOOR.
5. 102mm SANITARY/VENT STACK UP TO FIRST FLOOR CEILING SPACE. VENT STACK CONTINUES UP THRU ROOF.

WATER KEY NOTES:

1. 32mm COLD WATER LINE UP TO EASTERN STYLE WATER CLOSET ON 2nd FLOOR.
2. 13mm COLD WATER LINE & 13mm HOT WATER LINE UP TO TROUGH ON 2nd FLOOR.
3. 13mm COLD WATER LINE & 13mm HOT WATER LINE UP TO SHOWER ON 2nd FLOOR.
4. 19mm COLD WATER LINE & 19mm HOT WATER LINE UP TO MOP BASIN ON 2nd FLOOR.

LEGEND

COLD WATER
HOT WATER
SANITARY ABOVE GROUND
SANITARY UNDER GROUND
VENT LINE

FLOOR PLAN NOTES:

1. DO NOT SCALE DRAWINGS – ALL DIMENSIONS AND CONDITIONS SHALL BE CHECKED AND VERIFIED BY THE CONTRACTOR AT THE SITE.
2. ALL WORK PERFORMED ON THIS BUILDING SHALL BE IN COMPLIANCE WITH ALL PERTINENT CODES, RULES, ORDINANCES AND REGULATIONS OF THE GOVERNING AUTHORITIES.
3. ALL WORK PERFORMED UNDER AND IN CONNECTION WITH THESE DRAWINGS AND SPECIFICATIONS SHALL BE IN STRICT COMPLIANCE WITH THE LATEST SAFETY AND HEALTH STANDARDS.
4. REPORT ANY DISCREPANCIES FOUND IN THE PLUMBING DRAWINGS AND/OR IN THE SPECIFICATIONS DURING THE BIDDING PROCESS FOR CLARIFICATION BY THE ENGINEER.
5. ALL EASTERN STYLE WATER CLOSETS IN THIS FACILITY ARE TO HAVE THE FIXTURE DESIGNATION OF W-1. EACH FIXTURE SHALL HAVE A (1) INCH (25mm) COLD WATER CONNECTION AND A (4) INCH (102mm) SANITARY CONNECTION.
6. ALL TROUGH FIXTURES IN THIS FACILITY ARE TO HAVE THE FIXTURE DESIGNATION OF L-1. EACH FIXTURE SHALL HAVE A (1/2 INCH) (13mm) COLD WATER, (1/2 INCH) (13mm) HOT WATER CONNECTION AND A (3 INCH) (76mm) SANITARY CONNECTION.
7. ALL SHOWER FIXTURES IN THIS FACILITY ARE TO HAVE THE FIXTURE DESIGNATION OF SH-1. EACH FIXTURE SHALL HAVE A (1/2 INCH) (13mm) COLD WATER, (1/2 INCH) (13mm) HOT WATER CONNECTION AND A (3 INCH) (76mm) SANITARY CONNECTION TO A FLOOR DRAIN.
8. PLUMBING CONTRACTOR TO PROVIDE WATER HAMMER ARRESTORS AT ALL WATER CLOSETS.
9. PLUMBING CONTRACTOR TO PROVIDE TRAP PRIMERS AND 1/2" (13mm) COLD WATER LINES FOR ALL FLOOR DRAINS. COLD WATER LINES TO BE UNDER THE FLOOR FROM TRAP PRIMERS TO TRAPS ON FLOOR DRAINS.
10. REFER TO SHEET P4 FOR DETAILS AND SYMBOLS.
11. ALL WATER, SANITARY AND VENT LINES TO BE EXPOSED. RUN LINES TIGHT TO CEILING AND WALL. WATER, SANITARY AND VENT LINES IN CELL 101 & CELL 102 TO BE PIPED IN CHASE.

1 0 1 2 3 4 5 6 7 8 9
1:100

US Army Corps of Engineers
Afghanistan Engineer District

SYMBOL	DESCRIPTION	DATE	APR

DESIGNED BY: RMH	DATE: 09-30-09	
DWN BY: RMH	SUBMITTED BY: BAKER	
CHK BY: CJM III	FILE NO.: ANPSDP-101XXX	

Michael Baker Jr., Inc.
A unit of Michael Baker Corporation
Airside Business Park
100 Airside Drive
Moon Township PA 15108
www.mbakercorp.com

STANDARD DESIGN
ADMINISTRATION BUILDING – 2-STORY (1446 GSM)
WOOD FIRED HEAT OPTION

FIRST FLOOR PLAN - PLUMBING

SHEET REFERENCE NUMBER:
P1

100% SUBMISSION

FIXTURE LIST

TYPE	ITEM	SOIL & WASTE	VENT	COLD WATER	HOT WATER	REMARKS	REMARKS 2
W-1	EASTERN STYLE WATER CLOSET	102mm	51mm	25mm	------	FLUSH VALVE	LOW FLOW EFFICIENT TYPE
L-1	TROUGH FIXTURE	38mm	38mm	13mm	13mm	FABRICATED IN FIELD	LOW FLOW EFFICIENT TYPE
L-2	LAVATORY	38mm	38mm	13mm	13mm	WALL HUNG FIXTURE	LOW FLOW EFFICIENT TYPE
SH-1	SHOWER	FLOOR DRAIN	------	13mm	13mm	PRIVATE SHOWER	LOW FLOW EFFICIENT TYPE
S-1	COUNTERTOP SINK	38mm	38mm	13mm	13mm	559mm x 635mm x 165mm STAINLESS STEEL	LOW FLOW EFFICIENT TYPE
MB-1	MOP BASIN	76mm	51mm	19mm	19mm	------	LOW FLOW EFFICIENT TYPE
HWH-1	WATER HEATER	---	---	SEE DWG.	SEE DWG.	151 LITER ELECTRIC WATER HEATER, 380/3ø, 24KW	----------

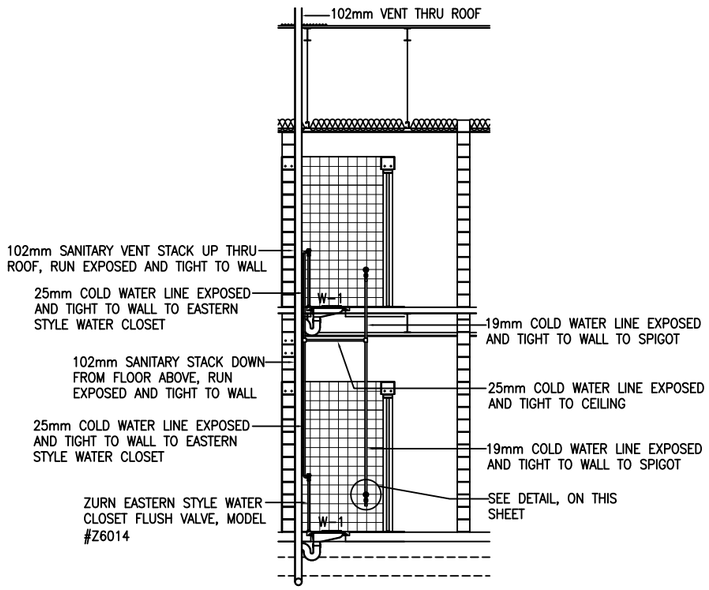

TYPICAL EASTERN STYLE WATER CLOSET
SANITARY & WATER INSTALLATION SCHEMATIC
NO SCALE

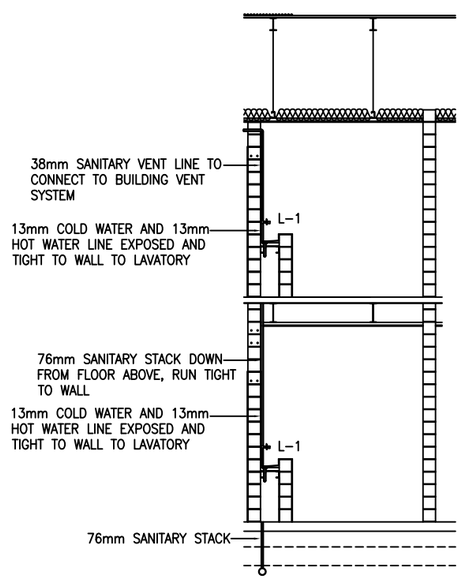

TYPICAL LAVATORY SANITARY & WATER
INSTALLATION SCHEMATIC
NO SCALE

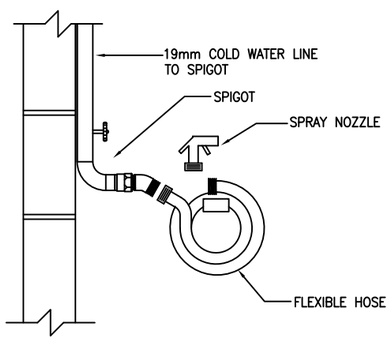

TYPICAL DETAIL – SPIGOT, FLEXIBLE HOSE, AND SPRAY NOZZLE
NO SCALE

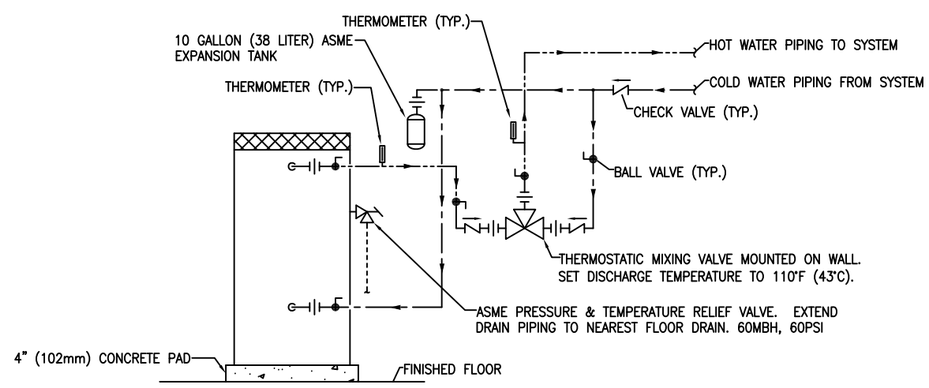

ELECTRIC WATER HEATER PIPING SCHEMATIC
NO SCALE

PLUMBING LEGEND

- SANITARY SEWER PIPING (BELOW GROUND)
- SANITARY SEWER PIPING (ABOVE GROUND)
- V — VENT PIPING (V)
- COLD WATER PIPING (CW)
- HOT WATER PIPING (HW)
- 140° — 140° HOT WATER PIPING (HW)
- BALL VALVE
- UNION
- WATER HAMMER ARRESTOR (WHA)
- BACKFLOW PREVENTER
- OR — CLEANOUT (CO.)
- THERMOMETER
- FLOOR DRAIN
- ROOF PENETRATION

GENERAL PLUMBING NOTES:

1. ALL SANITARY PIPING SHALL BE BELOW FLOOR, AND ALL WATER, AND VENT PIPING SHALL BE TIGHT TO CEILING, UNLESS OTHERWISE NOTED.

2. PLUMBING CONTRACTOR SHALL COORDINATE PLUMBING WORK WITH THE WORK OF ALL OTHER TRADES. VERIFY THE LOCATIONS OF ALL UTILITIES AT THE SITE PRIOR TO THE START OF ANY PLUMBING WORK.

3. COORDINATE ALL ACCESS PANEL LOCATIONS WITH THE ARCHITECT AND GENERAL CONTRACTOR.

4. ALL SANITARY PIPING BELOW SLAB SHALL BE A MINIMUM OF 51mm, UNLESS OTHERWISE NOTED OR AS REQUIRED BY THE LOCAL AUTHORITY HAVING JURISDICTION.

5. ALL SANITARY BRANCH LINES SHALL BE SLOPED AT 6mm PER 305mm, AND ALL MAIN LINES SHALL BE SLOPED AT 3mm PER 305mm, UNLESS OTHERWISE NOTED OR AS REQUIRED BY THE LOCAL AUTHORITY HAVING JURISDICTION.

6. THE PLUMBING CONTRACTOR SHALL BE RESPONSIBLE FOR COORDINATION WITH ALL UTILITY AUTHORITIES FOR INSTALLATION REQUIRMENTS, REGULATIONS, FEES, PERMITS, AND APPROVALS BEFORE THE START OF CONSTRUCTION.

7. THE PLUMBING CONTRACTOR SHALL ROUGH-IN AND CONNECT ALL EQUIPMENT REQUIRING WATER, WASTE, AND/OR VENT WHETHER OR NOT FURNISHED UNDER THIS CONTRACT. THE PLUMBING CONTRACTOR SHALL ALSO FURNISH AND INSTALL ALL NECESSARY PIPE, FITTINGS, VALVES, TRAPS, ETC., REQUIRED FOR A COMPLETE INSTALLATION, LEAVING SAME READY FOR SERVICE.

8. SEE ARCHITECTURAL DRAWING A3 FOR TYPICAL VENT THRU ROOF DETAIL.

US Army Corps of Engineers
Afghanistan Engineer District

SYMBOL	DESCRIPTION	DATE	APR

DESIGNED BY: RMH
DATE: 09-30-09
DWN BY: RMH
SUBMITTED BY: BAKER
CHK BY: CJM III
FILE NO.: ANPSDP-504XXX

Michael Baker Jr., Inc.
A unit of Michael Baker Corporation
Airside Business Park
100 Airside Drive
Moon Township PA 15108
www.mbakercorp.com

STANDARD DESIGN
ADMINISTRATION BUILDING – 2-STORY (1446 GSM)
WOOD FIRED HEAT OPTION
TYPICAL PLUMBING SECTIONS, PLUMBING DETAILS
PLUMBING NOTES & PLUMBING SCHEDULE

SHEET REFERENCE NUMBER:
P4

100% SUBMISSION

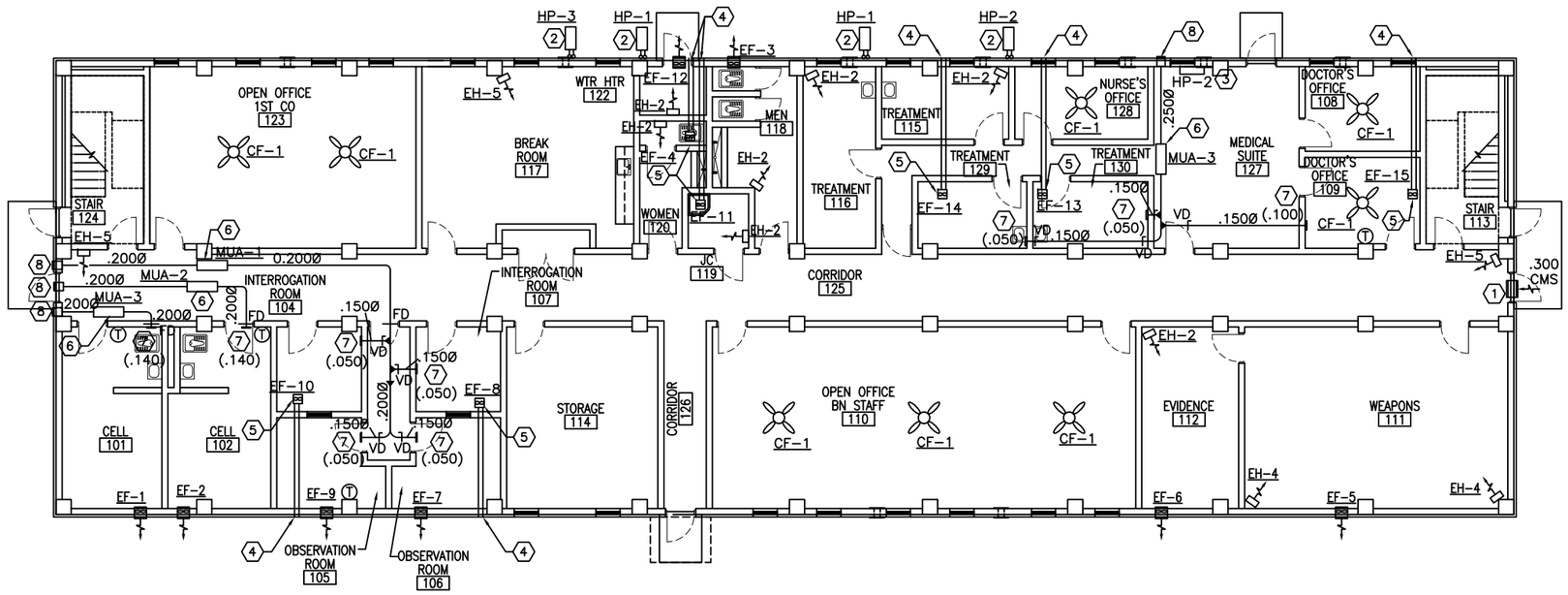

1 M1 M1 FIRST FLOOR PLAN - HVAC

SCALE: 1:100

GENERAL NOTES:

1. DO NOT SCALE DRAWINGS – ALL DIMENSIONS AND CONDITIONS SHALL BE CHECKED AND VERIFIED BY THE CONTRACTOR AT THE SITE.
2. ALL WORK PERFORMED ON THIS BUILDING SHALL BE IN COMPLIANCE WITH ALL PERTINENT CODES, RULES, ORDINANCES AND REGULATIONS OF THE GOVERNING AUTHORITIES.
3. ALL WORK PERFORMED UNDER AND IN CONNECTION WITH THESE DRAWINGS AND SPECIFICATIONS SHALL BE IN STRICT COMPLIANCE WITH THE LATEST SAFETY AND HEALTH STANDARDS.

SYMBOLS:

- (X) KEY NOTE
- (.050) AIR VOLUME IN CUBIC METERS PER SECOND (CMS)
- ¬ VOLUME DAMPER
- SDW SUPPLY DIFFUSER WALL
- FD FIRE DAMPER
- (T) THERMOSTAT WITH LOCKING COVER MOUNT ALL THERMOSTATS AT 1.5M (5 FT) AFF.

NUMBERED NOTE:

1. 200X400 (8X16) LOW LEAKAGE GRAVITY WALL LOUVER FOR INTAKE AIR. PROVIDE WEATHERPROOF LOUVER W/ 50mm (2") WASH DOWN FILTER AND SAND TRAP.
2. REMOTE MOUNTED CONDENSING UNIT MOUNTED ON 1M X 155mm THICK CONCRETE PAD, SERVING INDOOR HP UNIT. EXTEND INSULATED REFRIGERATION LINES UP WALL TO INDOOR UNIT AS REQ'D. UNIT SHALL BE SECURED TO CONCRETE PAD. SEE DETAIL ON SHEET M3.
3. WALL MOUNTED HP UNIT. SUPPLIED AND INSTALLED BY MECHANICAL CONTRACTOR. FINAL ELECTRICAL CONNECTIONS BY EC. SEE DETAIL ON SHEET M3.
4. WALL CAP PER FAN MANUFACTURER.
5. EXHAUST FAN WITH WALL CAP. DUCT SIZE SHALL MATCH FAN OUTLET..
6. ELECTRIC MAKE UP AIR HEATER SECURED TO STRUCTURE ABOVE. ALL FINAL ELECTRICAL CONNECTIONS SHALL BE BY THE EC.
7. 150x150 (6x6) SDW, BALANCE TO CMS IN PARENTHESIS.
8. 200X200 (8X8) LOW LEAKAGE GRAVITY WALL LOUVER FOR SUPPLY AIR. PROVIDE WEATHERPROOF LOUVER W/ 2" WASH DOWN FILTER AND SAND TRAP.

SPLIT SYSTEM HEAT PUMP UNIT SCHEDULE

	INDOOR UNIT									
	CMS	COOLING COIL DATA E.A.T. °C DB	WB	kW	EER	ELECT. CHAR.	MIN. AMP.	MAX FUSE	SP mmH20	WEIGHT (kg)
HP-1 HP-2 HP-3	.213	43	21	6.5	2.62	220/1/50	0.30	6	13	16

OUTDOOR UNIT				
ELECT. CHAR.	MIN. AMP.	MAX FUSE	POWER INPUT (kW)	WEIGHT (kg)
220/1/50	10.82	25	2.48	60

MAKE UP AIR HEATERS

NO.	BLOWER CMS	FUSE	KW	MIN. TEMP RISE °C	SP mmH20	ELECT. CHAR.	CONTROL
MUA-1	0.200	30	5	20	13	220/1/50	REMOTE
MUA-2	0.140	30	5	20	13	220/1/50	REMOTE
MUA-3	0.140	30	5	20	13	220/1/50	REMOTE

NOTES:
1. PROVIDE REMOTE MOUNTED THERMOSTAT WITH LOCKING COVER.
2. INTERLOCK BLOWER OPERATION WITH EXHAUST FANS.
3. BLOWER SHALL BE SET TO ENERGIZE WITH EXHAUST FAN(S), HEAT SHALL BE CONTROLLED BY THERMOSTAT. PROVIDE AIR SENSING SWITCH FOR HEATING OPERATION.

ELECTRIC UNIT HEATER SCHEDULE

NO.	CMS	KW	F.A.T. °C	ELECT. CHAR.	MOUNTING
EH-2	.200	2.6	38	370/1/50	WALL HUNG
EH-4	.200	4	38	370/1/50	WALL HUNG
EH-5	.200	5	38	370/1/50	WALL HUNG

NOTES:
1. UNIT HEATERS SHALL BE MOUNTED AS HIGH AS POSSIBLE.
2. UNIT HEATERS SHALL HAVE TAMPER PROOF INTEGRAL STATS.

EXHAUST FAN SCHEDULE

NO.	TYPE	FAN CMS	DRIVE	HP	SP mmH20	ELECT. CHAR.	SWITCH
EF-1	WALL	0.150	DIRECT	FRACT	13	220/1/50	@ WALL
EF-2	WALL	0.150	DIRECT	FRACT	13	220/1/50	@ WALL
EF-3	WALL	0.100	DIRECT	FRACT	13	220/1/50	@ WALL
EF-4	CEILING	0.050	DIRECT	FRACT	13	220/1/50	@ WALL
EF-5	WALL	0.050	DIRECT	FRACT	13	220/1/50	@ WALL
EF-6	WALL	0.050	DIRECT	FRACT	13	220/1/50	@ WALL
EF-7	WALL	0.050	DIRECT	FRACT	13	220/1/50	@ WALL
EF-8	WALL	0.050	DIRECT	FRACT	13	220/1/50	@ WALL
EF-9	WALL	0.050	DIRECT	FRACT	13	220/1/50	@ WALL
EF-10	CEILING	0.050	DIRECT	FRACT	13	220/1/50	@ WALL
EF-11	CEILING	0.050	DIRECT	FRACT	13	220/1/50	@ WALL
EF-12	WALL	0.050	DIRECT	FRACT	13	220/1/50	@ WALL
EF-13	CEILING	0.050	DIRECT	FRACT	13	220/1/50	@ WALL
EF-14	CEILING	0.050	DIRECT	FRACT	13	220/1/50	@ WALL
EF-15	CEILING	0.050	DIRECT	FRACT	13	220/1/50	@ WALL

NOTES:
1. WALL MOUNTED EXHAUST FAN MOUNT AT 600mm BELOW CEILING.
2. CEILING MOUNTED FANS SHALL BE HELD TIGHT TO STRUCTURE.

CEILING FAN

NO.	BLADE SIZE mm	IN	VOLTAGE	SWITCH
CF-1	1320	52	220/1/50	@ WALL

NOTES:
1. FINAL ELECTRICAL CONNECTIONS BY EC.

US Army Corps of Engineers
Afghanistan Engineer District

SYMBOL	DESCRIPTION	DATE	APR

DESIGNED BY: RML
DWN BY: JJN
CHK BY: CJM
DATE: 09-30-09
SUBMITTED BY: BAKER
FILE NO.: ANPSDM-101XXX

Michael Baker Jr., Inc.
A unit of Michael Baker Corporation
Airside Business Park
100 Airside Drive
Moon Township PA 15108
www.mbakercorp.com

STANDARD DESIGN
ADMINISTRATION BUILDING – 2-STORY (1446 GSM)
WOOD FIRED HEAT OPTION

FIRST FLOOR PLAN - HVAC

SHEET REFERENCE NUMBER:
M1

100% SUBMISSION

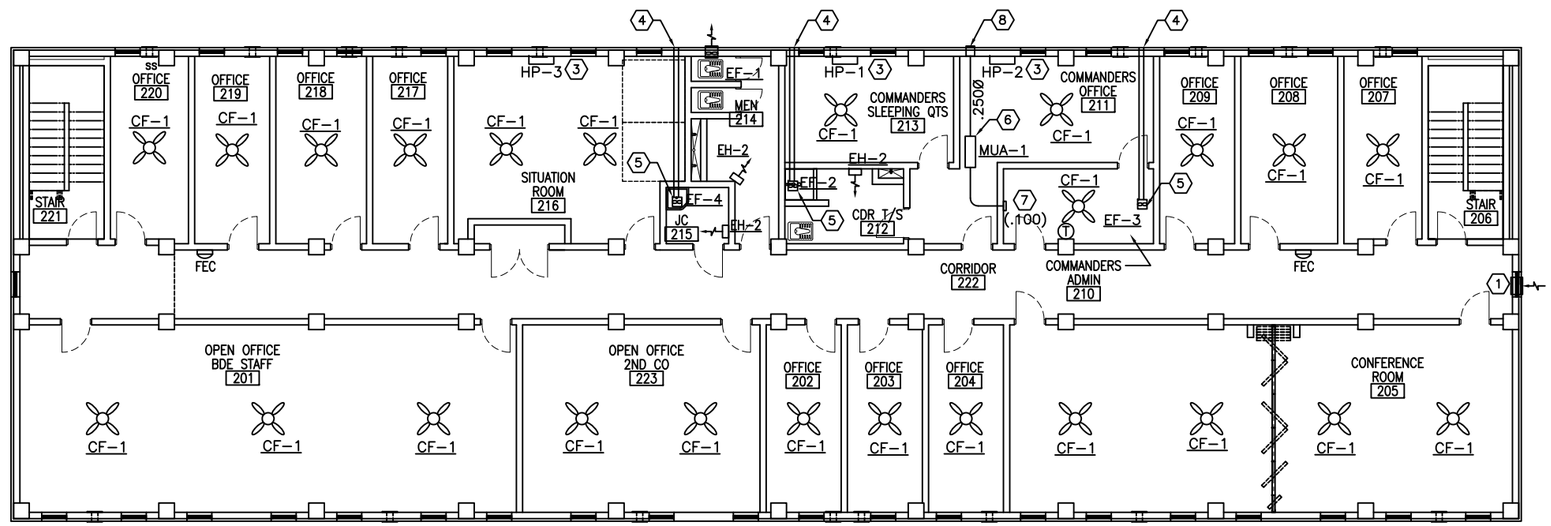

SECOND FLOOR PLAN - HVAC

1 M2 M2

SCALE: 1:100

N

GENERAL NOTES:

1. DO NOT SCALE DRAWINGS – ALL DIMENSIONS AND CONDITIONS SHALL BE CHECKED AND VERIFIED BY THE CONTRACTOR AT THE SITE.
2. ALL WORK PERFORMED ON THIS BUILDING SHALL BE IN COMPLIANCE WITH ALL PERTINENT CODES, RULES, ORDINANCES AND REGULATIONS OF THE GOVERNING AUTHORITIES.
3. ALL WORK PERFORMED UNDER AND IN CONNECTION WITH THESE DRAWINGS AND SPECIFICATIONS SHALL BE IN STRICT COMPLIANCE WITH THE LATEST SAFETY AND HEALTH STANDARDS.

SYMBOLS:

- (X) KEY NOTE
- (.050) AIR VOLUME IN CUBIC METERS PER SECOND CMS
- ¬ VOLUME DAMPER
- SDW SUPPLY DIFFUSER WALL
- FD FIRE DAMPER
- (T) THERMOSTAT WITH LOCKING COVER MOUNT ALL THERMOSTATS AT 1.5M (5 FT) AFF.

NUMBERED NOTE:

1. 200X400 (8X16) LOW LEAKAGE GRAVITY WALL LOUVER FOR INTAKE AIR. PROVIDE WEATHERPROOF LOUVER W/ 50mm (2") WASH DOWN FILTER AND SAND TRAP.
2. REMOTE MOUNTED CONDENSING UNIT MOUNTED ON 1M X 155mm THICK CONCRETE PAD, SERVING INDOOR HP UNIT. EXTEND INSULATED REFRIGERATION LINES UP WALL TO INDOOR UNIT AS REQ'D. UNIT SHALL BE SECURED TO CONCRETE PAD. SEE DETAIL ON SHEET M3
3. WALL MOUNTED HP UNIT. SUPPLIED AND INSTALLED BY MECHANICAL CONTRACTOR. FINAL ELECTRICAL CONNECTIONS BY EC. SEE DETAIL ON SHEET M3.
4. WALL CAP PER FAN MANUFACTURER.
5. EXHAUST FAN WITH WALL CAP. DUCT SIZE SHALL MATCH FAN OUTLET.
6. ELECTRIC MAKE UP AIR HEATER SECURED TO STRUCTURE ABOVE. ALL FINAL ELECTRICAL CONNECTIONS SHALL BE BY THE EC.
7. 150x150 (6x6) SDW, BALANCE TO CMS IN PARENTHESIS.
8. 200X200 (8X8) LOW LEAKAGE GRAVITY WALL LOUVER FOR SUPPLY AIR. PROVIDE WEATHERPROOF LOUVER W/ 2" WASH DOWN FILTER AND SAND TRAP.

MAKE UP AIR HEATERS

NO.	BLOWER CMS	FUSE	KW	MIN. TEMP RISE °C	SP mmH20	ELECT. CHAR.	CONTROL
MUA-1	0.100	30	5	5	13	220/1/50	REMOTE

NOTES:
1. PROVIDE REMOTE MOUNTED THERMOSTAT WITH LOCKING COVER.
2. INTERLOCK BLOWER OPERATION WITH EXHAUST FANS.
3. BLOWER SHALL BE SET TO ENERGIZE WITH EXHAUST FAN(S), HEAT SHALL BE CONTROLLED BY THERMOSTAT. PROVIDE AIR SENSING SWITCH FOR HEATING OPERATION.

EXHAUST FAN SCHEDULE

NO.	TYPE	FAN CMS	DRIVE	HP	SP mmH20	ELECT. CHAR	SWITCH
EF-1	WALL	0.100	DIRECT	FRACT	13	220/1/50	@ WALL
EF-2	CEILING	0.050	DIRECT	FRACT	13	220/1/50	@ WALL
EF-3	CEILING	0.100	DIRECT	FRACT	13	220/1/50	@ WALL
EF-4	CEILING	0.050	DIRECT	FRACT	13	220/1/50	@ WALL

NOTES:
1. WALL MOUNTED EXHAUST FAN MOUNT AT 600mm BELOW CEILING.
2. CEILING MOUNTED FANS SHALL BE HELD TIGHT TO STRUCTURE.

ELECTRIC UNIT HEATER SCHEDULE

NO.	CMS	KW	F.A.T. °C	ELECT. CHAR.	MOUNTING
EH-2	.200	2.6	38	370/1/50	WALL HUNG
EH-4	.200	4	38	370/1/50	WALL HUNG
EH-5	.200	5	38	370/1/50	WALL HUNG

NOTES:
1. UNIT HEATERS SHALL BE MOUNTED FROM STRUCTURE ABOVE.
2. UNIT HEATERS SHALL HAVE TAMPER PROOF INTEGRAL STATS.

CEILING FAN

NO.	BLADE SIZE mm	BLADE SIZE IN	VOLTAGE	SWITCH
CF-1	1320	52	220/1/50	@ WALL

NOTES:
1. FINAL ELECTRICAL CONNECTIONS BY EC.

US Army Corps of Engineers
Afghanistan Engineer District

SYMBOL	DESCRIPTION	DATE	APR

DESIGNED BY: RML
DATE: 09-30-09
DWN BY: JJN
SUBMITTED BY: BAKER
CHK BY: CJM
FILE NO.: ANPSDM-102XXX

Michael Baker Jr., Inc.
A unit of Michael Baker Corporation
Airside Business Park
100 Airside Drive
Moon Township PA 15108
www.mbakercorp.com

STANDARD DESIGN
ADMINISTRATION BUILDING – 2-STORY (1446 GSM)
WOOD FIRED HEAT OPTION

SECOND FLOOR PLAN - HVAC

SHEET REFERENCE NUMBER:
M2

100% SUBMISSION

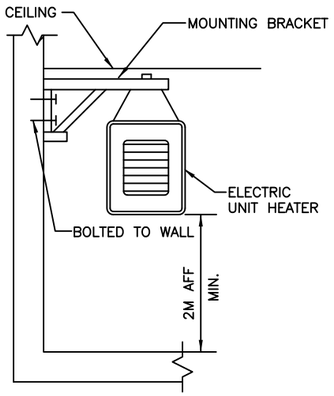

ELECTRIC UNIT HEATER MOUNTING
N.T.S.

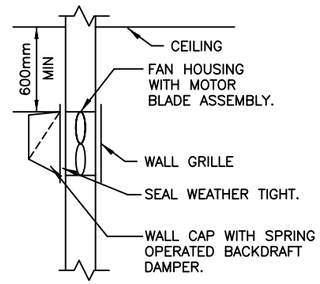

WALL MOUNTED EXHAUST FAN DETAIL
N.T.S.

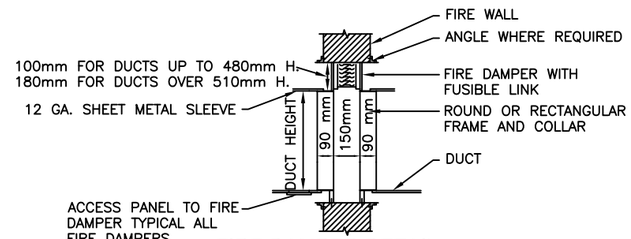

FIRE DAMPER DETAIL
N.T.S.

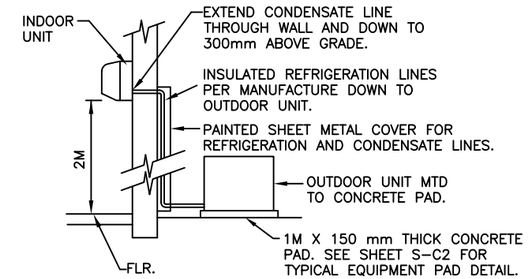

TYPICAL HEAT PUMP UNIT INSTALLATION
N.T.S.

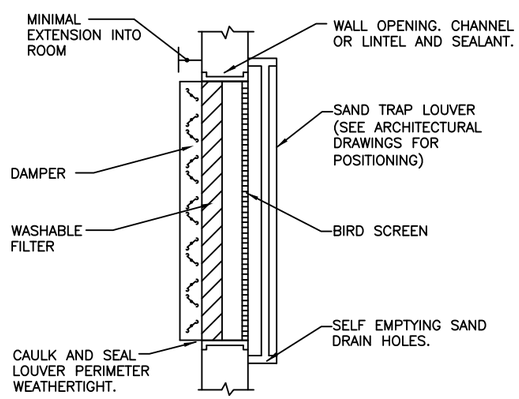

FILTERED SAND TRAP LOUVER
N.T.S.

US Army Corps of Engineers
Afghanistan Engineer District

SYMBOL	DESCRIPTION	DATE	APR

DESIGNED BY: RML
DATE: 09-30-09
DWN BY: JJN
SUBMITTED BY: BAKER
CHK BY: CJM
FILE NO.: ANPSDM-503XXX

Michael Baker Jr., Inc
A unit of Michael Baker Corporation
Airside Business Park
100 Airside Drive
Moon Township PA 15108
www.mbakercorp.com

STANDARD DESIGN
ADMINISTRATION BUILDING - 2-STORY (1446 GSM)
WOOD FIRED HEAT OPTION

HVAC DETAILS

SHEET REFERENCE NUMBER:
M3

100% SUBMISSION

POWER

- DISTRIBUTION PANELBOARD
- NEW PANELBOARD – SURFACE
- NEW PANELBOARD – RECESSED
- EXISTING PANELBOARD
- GENERATOR
- TVSS — TRANSIENT VOLTAGE SURGE SURPRESSOR
- TRANSFORMER (DRAWN TO SIZE)
- PS — POWER SUPPLY
- CP — CONTROL PANEL
- TC — TIME CLOCK
- TIM — ASTRONOMICAL TIME CLOCK– "SEE SPEC."
- R — RELAY WITH RATING AND NUMBER OF POLES AS NOTED ON DRAWINGS– "SEE SPEC."
- J — JUNCTION BOX
- J — JUNCTION BOX – CEILING
- PB — PULL BOX
- BD — BUS DUCT HORIZONTAL
- BUS DUCT VERTICAL
- D — EMERGENCY POWER OFF PUSH BUTTON
- NON–FUSIBLE SAFETY SWITCH
- FUSIBLE SAFETY SWITCH
- M — MOTOR
- $M — MOTOR STARTING SWITCH – 20A RATED
- $K — KEY SWITCH – 20A RATED
- FC — FAN COIL – FURNISHED BY MECHANICAL CONTRACTOR, ELECTRICAL CONTRACTOR SHALL INSTALL AND PROVIDE POWER CONNECTION
- UH — UNIT HEATER – FURNISHED BY MECHANICAL CONTRACTOR, ELECTRICAL CONTRACTOR SHALL INSTALL AND PROVIDE POWER CONNECTION
- D — JUNCTION BOX FOR CONNECTION TO GARBAGE DISPOSAL
- CF — LIGHT/HEATER/FAN – FURNISHED BY MECHANICAL CONTRACTOR, ELECTRICAL CONTRACTOR SHALL INSTALL AND PROVIDE POWER CONNECTION
- ELECTRIC WATER HEATER
- EPO — WEATHERPROOF / EXPLOSION PROOF EMERGENCY POWER OFF PUSH–BUTTON TO BE INTERCONNECTED WITH GENERATOR SHUT DOWN CONTROL
- CEILING FAN – REFER TO SPECIFICATION SECTION 26 20 00

RECEPTACLES

- DUPLEX 20A BRITISH STANDARD UNSWITCHED SOCKETS
- GF — DUPLEX 20A BRITISH STANDARD UNSWITCHED SOCKETS – 10mA GROUND FAULT INTERRUPTER TYPE
- WP — DUPLEX 20A BRITISH STANDARD UNSWITCHED SOCKETS – 10mA GROUND FAULT INTERRUPTER TYPE WITH WEATHERPROOF COVER
- EXP — DUPLEX 20A BRITISH STANDARD UNSWITCHED SOCKETS – EXPLOSION PROOF
- * — INDICATES MOUNT DEVICE ABOVE COUNTER TOP

LIGHTNING PROTECTION

- AIR TERMINAL 20mm O.D. X 4m SOLID COPPER, NICKEL PLATED ON ADHESIVE BASE.
- EQ — EQUIPMENT AIR TERMINAL
- TEST WELL WITH GROUND ROD(S)
- GROUND ROD
- G — GROUND PLATE
- MAIN GROUND CONDUCTER CONCEALED WITHIN CONSTRUCTION
- MAIN GROUND CONDUCTOR EXPOSED ON EXPOSED ON BUILDING EXTERIOR SURFACE
- GROUND CONDUCTOR CAD WELDED TO GROUND CABLE OR EQUIPMENT
- GROUND CONDUCTOR CAD WELDED TO BUILDING STEEL COLUMN
- GROUND ROD TRIPOD, SPACED 10 FEET APART.
- LEVEL TO LEVEL CABLE

LIGHTING

- LIGHTING FIXTURE – SEE FIXTURE SCHEDULE FOR MORE INFORMATION
- LIGHTING FIXTURE – SEE FIXTURE SCHEDULE FOR MORE INFORMATION
- DOWNLIGHT
- LIGHTING FIXTURE ON NORMAL/EMERGENCY
- WALL MOUNTED LIGHT FIXTURE
- E — EXIT SIGN – DIRECTIONAL ARROWS AS INDICATED ON DRAWINGS
- B — BATTERY PACK WITH HEADS AS INDICATED ON DRAWINGS
- REMOTE HEAD FOR BATTERY PACK
- $ — SINGLE POLE SWITCH – 20A RATED
- $3 — 3–WAY SWITCH – 20A RATED
- $4 — 4–WAY SWITCH – 20A RATED
- PC — PHOTOCELL VOLTAGE TO MATCH CIRCUITRY
- LC — LIGHTING CONTACTOR
- POLE MOUNTED SITE LIGHTING FIXTURE– NUMBER OF FIXTURES PER POLE AS INDICATED ON DRAWINGS
- EXTERIOR DIRECTIONAL LIGHTING FIXTURE
- a — SMALL CASE LETTERS REPRESENTS LAMP(S) / SWITCHES. WHEN USED WITH AN OCCUPANCY SENSOR THIS INDICATES SENSOR WITH MANUAL OVERRIDE SWITCH

TELECOMMUNICATIONS

- TELEPHONE OUTLET(S) @ 18" AFF. U.N.O. WITH 3/4" RACEWAY TERMINATED ABOVE NEAREST ACCESSIBLE CEILING OR TO TELEPHONE TERMINAL BOARD IF NO ACCESSIBLE CEILING AVAILABLE. SEE TELE/DATA RISER DIAGRAM FOR OUTLET AND CABLE DESCRIPTION
- DATA OUTLET(S) @ 18" AFF. U.N.O. WITH 3/4" RACEWAY TERMINATED ABOVE NEAREST ACCESSIBLE CEILING OR TO DATA EQUIPMENT RACK IF NO ACCESSIBLE CEILING AVAILABLE. SEE TELE/DATA RISER DIAGRAM FOR OUTLET AND CABLE DESCRIPTION

TELECOMMUNICATIONS (CONTINUED)

- COMBINATION TELEPHONE/DATA OUTLET(S) @ 18" AFF. U.N.O. WITH 1" RACEWAY TERMINATED ABOVE NEAREST ACCESSIBLE CEILING OR TO TELE/DATA TERMINAL AREA IF NO ACCESSIBLE CEILING AVAILABLE. SEE TELE/DATA RISER DIAGRAM FOR OUTLET AND CABLE DESCRIPTION
- W — WALL MTD. TELEPHONE OUTLET WITH 3/4" RACEWAY TERMINATED ABOVE NEAREST ACCESSIBLE CEILING OR TO TELEPHONE TERMINAL BOARD IF NO ACCESSIBLE CEILING AVAILABLE. SEE TELE/DATA RISER DIAGRAM FOR OUTLET AND CABLE DESCRIPTION
- (x)T — INDICATES NUMBER OF TELEPHONE OUTLET(S) AND ASSOCIATED CABLING
- (x)D — INDICATES NUMBER OF DATA OUTLET(S) AND ASSOCIATED CABLING
- (x)TF — INDICATES NUMBER OF TELEPHONE OUTLETS AND ASSOCIATED CABLING WITH 1 OUTLET AND CABLE DEDICATED FOR FAX

SINGLE LINE SYMBOLS

- SWITCH
- BREAKER
- FUSE
- TRANSFORMER
- CAPACITOR
- GROUND
- CONTACT (NORMALLY OPEN)
- CONTACT (NORMALLY CLOSED)
- AUTOMATIC TRANSFER SWITCH
- MANUAL DOUBLE THROW SWITCH
- CURRENT TRANSFORMER
- INDICATES NEW ELECTRICAL EQUIPMENT
- C — INDICATES NEW CONTROL WIRING AND CONDUIT
- EQUIPMENT OUTLINE

MISCELLANEOUS

- BRANCH CIRCUIT WIRING CONCEALED ABOVE CEILINGS, SURFACE MOUNTED ON WALLS
- BRANCH CIRCUIT WIRING – #10 AWG
- BRANCH CIRCUIT WIRING – UNDER FLOOR
- HOME RUN BACK TO PANEL
- CONDUIT TURNED DOWN
- CONDUIT TURNED UP
- LV — LOW VOLTAGE WIRING AND CONDUIT
- CT–X — CABLE TRAY ("X" DENOTES WIDTH)
- INDICATES CONTINUATION OF LINE

FIRE ALARM

- FACP — FIRE ALARM CONTROL PANEL WITH BATTERY BACKUP
- F — FIRE ALARM PULL STATION

FIRE ALARM (CONTINUED)

- F — FIRE ALARM STROBE – WALL MOUNTED
- F — FIRE ALARM AUDIBLE/STROBE – WM
- F — FIRE ALARM HORN/STROBE – WM
- S — SMOKE DETECTOR
- H — HEAT DETECTOR CEILING MOUNTED
- D — DUCT DETECTOR – PROVIDED BY EC, INSTALLED BY MC AND CONNECTED BY EC

DENOTATIONS & ABBREVIATIONS

AFF	ABOVE FINISHED FLOOR
C	CEILING MOUNTED
E	EMERGENCY
EC	ELECTRICAL CONTRACTOR
EPO	EMERGENCY POWER OFF
EXP	EXPLOSION PROOF
F	FIRE ALARM
FF	FLUSH FLOOR MOUNTED
FL	FLUORESCENT
FO	FIBER OPTIC
FSS	FUSED SAFETY SWITCH
G	GROUND FAULT INTERRUPTER
GC	GENERAL CONTRACTOR
HOA	HAND–OFF AUTO
I	INFRARED
ICD	INCANDESCENT
IG	ISOLATED GROUND
K	KEY
LV	LOW VOLTAGE
M	MOTOR
MC	MECHANICAL CONTRACTOR
NE	NORMAL/EMERGENCY
NFSS	NON–FUSED SAFETY SWITCH
PA	PAGING SYSTEM
PLC	PLUMBING CONTRACTOR
REL	RELOCATE
RED	RELOCATED
SL	SINGLE LINE
SS	SURGE SUPPRESSION
T	TELEPHONE
TL	TWIST LOCK

DENOTATIONS & ABBREVIATIONS (CONT.)

TP	TAMPER PROOF
UE	UNDERGROUND ELECTRIC
UF	UNDERGROUND FIBER
UT	UNDERGROUND TELEPHONE
W	WALL MOUNTED
WG	WIRE GUARD
WP	WEATHERPROOF
WPG	WEATHERPROOF/GROUND FAULT INTERRUPTER
WT	WATER TIGHT

GENERAL PROJECT NOTES:

G1. UNLESS OTHERWISE NOTED, PROVIDE ALL EQUIPMENT SHOWN ON THE PLANS. THE ELECTRICAL CONTRACTOR SHALL COORDINATE ALL SYMBOLS SHOWN ON THE PLANS WITH THE SYMBOL LIST. IT SHALL BE THE RESPONSIBILITY OF THE CONTRACTOR TO VERIFY THE INTENT OF ANY SYMBOL THAT IS SHOWN ON THE PLANS AND NOT INDICATED ON THE SYMBOL LIST WITH THE ENGINEER PRIOR TO BID.

G2. COORDINATE THE FINAL LOCATIONS OF ALL LIGHT FIXTURES WITH THE ARCHITECT'S REFLECTED CEILING PLANS. REPORT ANY DISCREPANCIES TO THE ARCHITECT PRIOR TO INSTALLATION.

G3. THE CONTRACTOR SHALL VERIFY THE LOCATION OF ALL UNDERGROUND UTILITIES WITHIN THE CONSTRUCTION AREA THREE (3) WORKING DAYS NOTICE BEFORE COMMENCE DIGGING. NOTIFY THE LOCAL OR STATE AUTHORITY HAVING JURISDICTION AND WAIT THE REQUIRED TIME BEFORE COMMENCING TO DIG.

G4. THE CONTRACTOR SHALL COORDINATE CONDUIT RUNS, CABLE TRAY, LIGHTING FIXTURES AND OTHER EQUIPMENT LOCATIONS WITH THE OTHER TRADE CONTRACTORS TO AVOID CONFLICTS.

G5. WHERE VOLTAGES AND FREQUENCIES ON THE DRAWINGS AND IN THE SPECIFICATIONS DIFFER FROM THE LOCAL ONES, ALL WORK SHALL BE PERFORMED USING THE LOCAL VOLTAGES AND FREQUENCIES.

G6. THE MINIMUM WIRE SIZE ON THE PROJECT SHALL BE 4mm2. THE MINIMUM CONDUIT SIZE SHALL BE 20mm. THE MINIMUM BREAKER SIZE SHALL BE 20 AMPS.

G7. THE CONTRACTOR SHALL PUT A MAXIMUM OF 6 DUPLEX SOCKETS ON A 20A SINGLE POLE CIRCUIT.

G8. WHERE THE 1010 SCOPE REVIEW, 1015 TECHNICAL REVIEW, DRAWINGS, AND SPECIFICATIONS DIFFER FROM AMERICAN CODES OR STANDARDS THE 1010, 1015, DRAWINGS, AND SPECIFICATIONS SHALL RULE.

G9. WORK FOR THE AMMUNITION SUPPLY POINT SHALL BE DONE IN ACCORDANCE WITH DEPARTMENT OF DEFENSE STANDARD DOD 6055.9–STD.

G10. ALL CONDUIT AND DEVICES SHALL BE SURFACE MOUNTED UNLESS OTHERWISE INDICATED.

US Army Corps of Engineers
Afghanistan Engineer District

SYMBOL	DESCRIPTION	DATE	APR

DESIGNED BY: JRG
DATE: 09–30–09
DWN BY: JRG
SUBMITTED BY: BAKER
CHK BY: JRG
FILE NO.: ANPSDE–000XXX

Michael Baker Jr., Inc.
A unit of Michael Baker Corporation
Airside Business Park
100 Airside Drive
Moon Township PA 15108
www.mbakercorp.com

STANDARD DESIGN
ADMINISTRATION BUILDING – 2–STORY (1446 GSM)
WOOD FIRED HEAT OPTION

ELECTRICAL SYMBOLS AND ABBREVIATIONS

SHEET REFERENCE NUMBER:
E0

100% SUBMISSION

GENERAL NOTES:

1. REFER TO DRAWING #E0 FOR THE ELECTRICAL SYMBOLS LIST.
2. EXIT SIGNS SHALL BE WIRED AHEAD OF ANY LOCAL SWITCHING ON CIRCUITS.
3. REFER TO DRAWING #E7 FOR THE LIGHTING FIXTURE SCHEDULE.
4. REFER TO DRAWING #E6 FOR THE POWER RISER.
5. REFER TO DRAWING #E8 FOR PANEL SCHEDULES.
6. LIGHT FIXTURES INDICATED AS EMERGENCY SHALL BE PROVIDED WITH A BATTERY BACKUP BALLAST.

NUMBERED NOTES:

(1) CIRCUIT SHALL BE CONTINUED TO THE FLOOR ABOVE.

(2) PROVIDE REMOTE BATTERY PACK IN WATER HEATER ROOM TO POWER THIS FIXTURE. THIS BATTERY PACK SHALL BE WIRED INTO THE CIRCUIT SHOWN AHEAD OF ANY LOCAL SWITCHING.

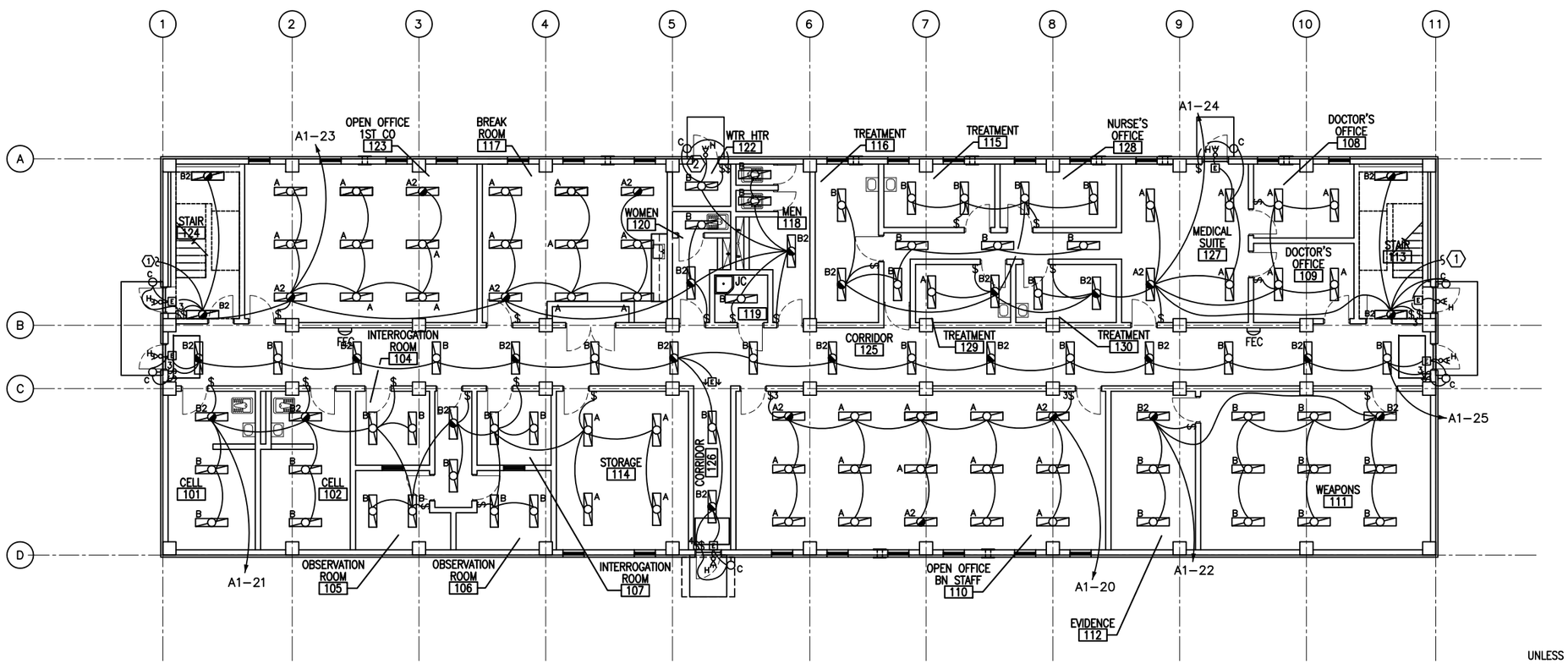

1 / E1 E1 FIRST FLOOR LIGHTING PLAN

SCALE: 1:100

N

UNLESS OTHERWISE NOTED, LINEAR DIMENSIONS SHOWN ARE IN MILLIMETERS (MM)

1 0 1 2 3 4 5 6 7 8 9

1:100

US Army Corps of Engineers

Afghanistan Engineer District

SYMBOL	DESCRIPTION	DATE	APR

DESIGNED BY: JRG
DATE: 09-30-09
DWN BY: JRG
SUBMITTED BY: BAKER
CHK BY: JRG
FILE NO.: ANPSDE-101XXX

Michael Baker Jr., Inc.
A unit of Michael Baker Corporation
Airside Business Park
100 Airside Drive
Moon Township PA 15108
www.mbakercorp.com

STANDARD DESIGN
ADMINISTRATION BUILDING – 2-STORY (1446 GSM)
WOOD FIRED HEAT OPTION

FIRST FLOOR LIGHTING PLAN

SHEET REFERENCE NUMBER:

E1

100% SUBMISSION

GENERAL NOTES:

1. REFER TO DRAWING #E0 FOR THE ELECTRICAL SYMBOLS LIST.
2. EXIT SIGNS SHALL BE WIRED AHEAD OF ANY LOCAL SWITCHING ON CIRCUITS.
3. REFER TO DRAWING #E7 FOR THE LIGHTING FIXTURE SCHEDULE.
4. REFER TO DRAWING #E6 FOR THE POWER RISER.
5. REFER TO DRAWING #E8 FOR PANEL SCHEDULES.
6. LIGHT FIXTURES INDICATED AS EMERGENCY SHALL BE PROVIDED WITH A BATTERY BACKUP BALLAST.

NUMBERED NOTES:

(1) CIRCUIT SHALL BE CONTINUED TO THE FLOOR BELOW.

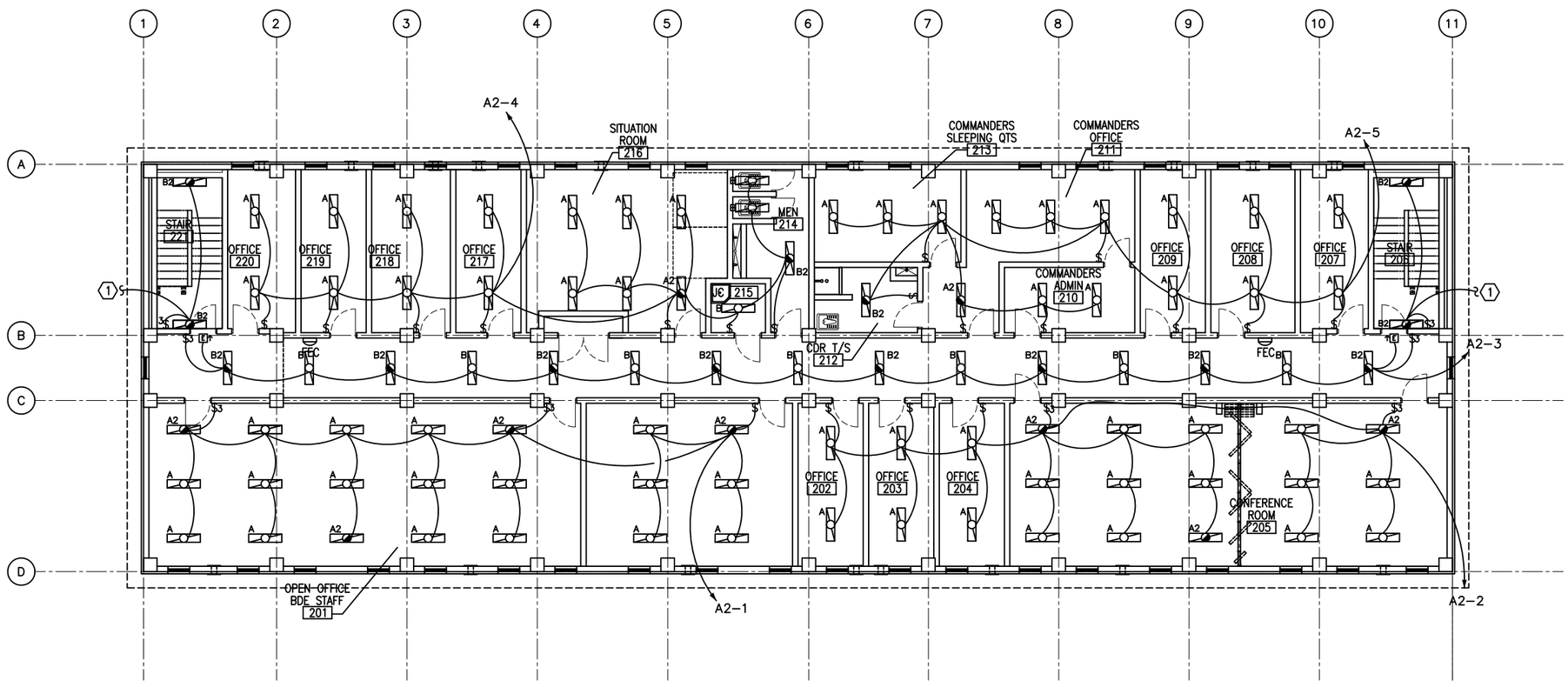

1 E2 E2 SECOND FLOOR LIGHTING PLAN

SCALE: 1:100

N

US Army Corps of Engineers

Afghanistan Engineer District

SYMBOL	DESCRIPTION	DATE	APR

DESIGNED BY: JRG	DATE: 09-30-09	
DWN BY: JRG	SUBMITTED BY: BAKER	
CHK BY: JRG	FILE NO.: ANPSDE-102XXX	

Michael Baker Jr., Inc.
A unit of Michael Baker Corporation
Airside Business Park
100 Airside Drive
Moon Township PA 15108
www.mbakercorp.com

STANDARD DESIGN
ADMINISTRATION BUILDING – 2-STORY (1446 GSM)
WOOD FIRED HEAT OPTION

SECOND FLOOR LIGHTING PLAN

SHEET REFERENCE NUMBER:

E2

100% SUBMISSION

GENERAL NOTES:

1. REFER TO DRAWING #E0 FOR THE ELECTRICAL SYMBOLS LIST.
2. REFER TO DRAWING #E6 FOR THE POWER RISER.
3. REFER TO DRAWING #E8 FOR PANEL SCHEDULES.
4. COORDINATE EXACT MOUNTING LOCATION OF DISCONNECTING MEANS FOR MECHANICAL AND PLUMBING EQUIPMENT IN THE FIELD.
5. FUSIBLE SAFETY SWITCHES THAT ARE NOT OTHERWISE IDENTIFIED SHALL BE 380V, 1P, 30A FUSED SAFETY SWITCHES WITH 20A FUSES.

NUMBERED NOTES:

1. PANEL A1 (SECTIONS 1 AND 2).
2. NEMA 3R, 380V, 3P, 60A FUSED DISCONNECT FUSED AT 60A. SEE PLUMBING DRAWINGS FOR EXACT LOCATION OF WATER HEATER.
3. SEE DRAWING #E8 FOR WIRE AND CONDUIT SIZE.
4. PROVIDE POWER CONNECTION TO MAKEUP AIR UNIT #1. SEE DRAWINGS #M1 AND #E8 FOR MORE INFORMATION.
5. PROVIDE POWER CONNECTION TO MAKEUP AIR UNIT #2. SEE DRAWINGS #M1 AND #E8 FOR MORE INFORMATION.
6. PROVIDE POWER CONNECTION TO MAKEUP AIR UNIT #3. SEE DRAWINGS #M1 AND #E8 FOR MORE INFORMATION.
7. PROVIDE POWER CONNECTION TO ELECTRIC UNIT HEATER #2. SEE DRAWINGS #M1 AND #E8 FOR MORE INFORMATION.

NUMBERED NOTES (CONT.):

8. PROVIDE POWER CONNECTION TO EXHAUST FANS. SEE DRAWINGS #M1 AND #E8 FOR MORE INFORMATION.
9. PROVIDE POWER CONNECTION TO OUTDOOR UNIT OF SPLIT SYSTEM HEAT PUMP. SEE DRAWINGS #M1 AND #E8 FOR MORE INFORMATION.
10. PROVIDE POWER CONNECTION TO ELECTRIC UNIT HEATER #4. SEE DRAWINGS #M1 AND #E8 FOR MORE INFORMATION.
11. PROVIDE POWER CONNECTION TO ELECTRIC UNIT HEATER #5. SEE DRAWINGS #M1 AND #E8 FOR MORE INFORMATION.
12. PROVIDE POWER CONNECTION TO INDOOR UNIT OF SPLIT SYSTEM HEAT PUMP. SEE DRAWINGS #M1 AND #E8 FOR MORE INFORMATION.
13. THE DISCONNECTING MEANS FOR THIS PIECE OF EQUIPMENT SHALL BE IN A NEMA 3R ENCLOSURE.
14. COORDINATE EXACT LOCATION AND MOUNTING OF ALL ELECTRICAL DEVICES AND CONDUIT IN THE CELLS AND INTERROGATION ROOMS. FINAL LOCATION AND INSTALLATION DETAILS SHALL BE AS DIRECTED BY AN ARMY CORPS OF ENGINEERS REPRESENTATIVE.

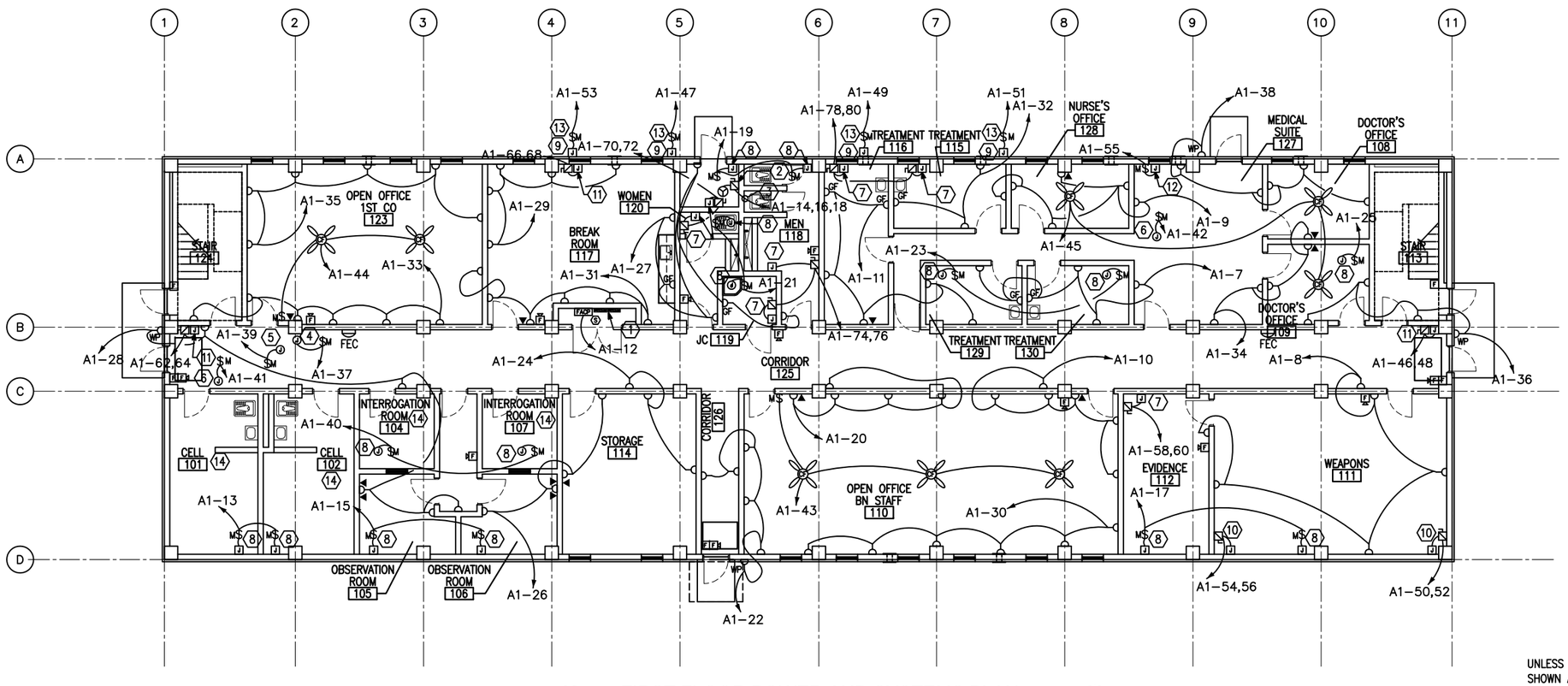

1 E3 E3 FIRST FLOOR POWER AND SYSTEMS PLAN

SCALE: 1:100

N

UNLESS OTHERWISE NOTED, LINEAR DIMENSIONS SHOWN ARE IN MILLIMETERS (MM)

1 0 1 2 3 4 5 6 7 8 9

1:100

US Army Corps of Engineers

Afghanistan Engineer District

SYMBOL	DESCRIPTION	DATE	APR

DESIGNED BY: JRG	DATE: 09-30-09
DWN BY: JRG	SUBMITTED BY: BAKER
CHK BY: JRG	FILE NO.: ANPSDE-103XXX

Michael Baker Jr., Inc.
A unit of Michael Baker Corporation
Airside Business Park
100 Airside Drive
Moon Township PA 15108
www.mbakercorp.com

STANDARD DESIGN
ADMINISTRATION BUILDING – 2-STORY (1446 GSM)
WOOD FIRED HEAT OPTION

FIRST FLOOR POWER AND SYSTEMS PLAN

SHEET REFERENCE NUMBER:

E3

100% SUBMISSION

GENERAL NOTE:

1. REFER TO DRAWING #E0 FOR THE ELECTRICAL SYMBOLS LIST.
2. REFER TO DRAWING #E6 FOR THE POWER RISER.
3. REFER TO DRAWING #E8 FOR PANEL SCHEDULES.
4. COORDINATE EXACT MOUNTING LOCATION OF DISCONNECTING MEANS FOR MECHANICAL AND PLUMBING EQUIPMENT IN THE FIELD.
5. FUSIBLE SAFETY SWITCHES THAT ARE NOT OTHERWISE IDENTIFIED SHALL BE 380V, 1P, 30A FUSED SAFETY SWITCHES WITH 20A FUSES.

NUMBERED NOTES:

1. PANEL A2 (SECTIONS 1 AND 2).
2. 32mm CONDUIT OVER TO SPEAKER CLUSTER ON POLE. SEE SPEAKER CLUSTER DETAIL ON DRAWING #E6.
3. PROVIDE POWER CONNECTION TO INDOOR UNIT OF SPLIT SYSTEM HEAT PUMP. SEE DRAWINGS #M1 AND #E8 FOR MORE INFORMATION.
4. PROVIDE POWER CONNECTION TO EXHAUST FANS. SEE DRAWINGS #M1 AND #E8 FOR MORE INFORMATION.
5. PROVIDE POWER CONNECTION TO MAKEUP AIR UNIT #1. SEE DRAWINGS #M1 AND #E8 FOR MORE INFORMATION.
6. PROVIDE POWER CONNECTION TO ELECTRIC UNIT HEATER #2. SEE DRAWINGS #M1 AND #E8 FOR MORE INFORMATION.

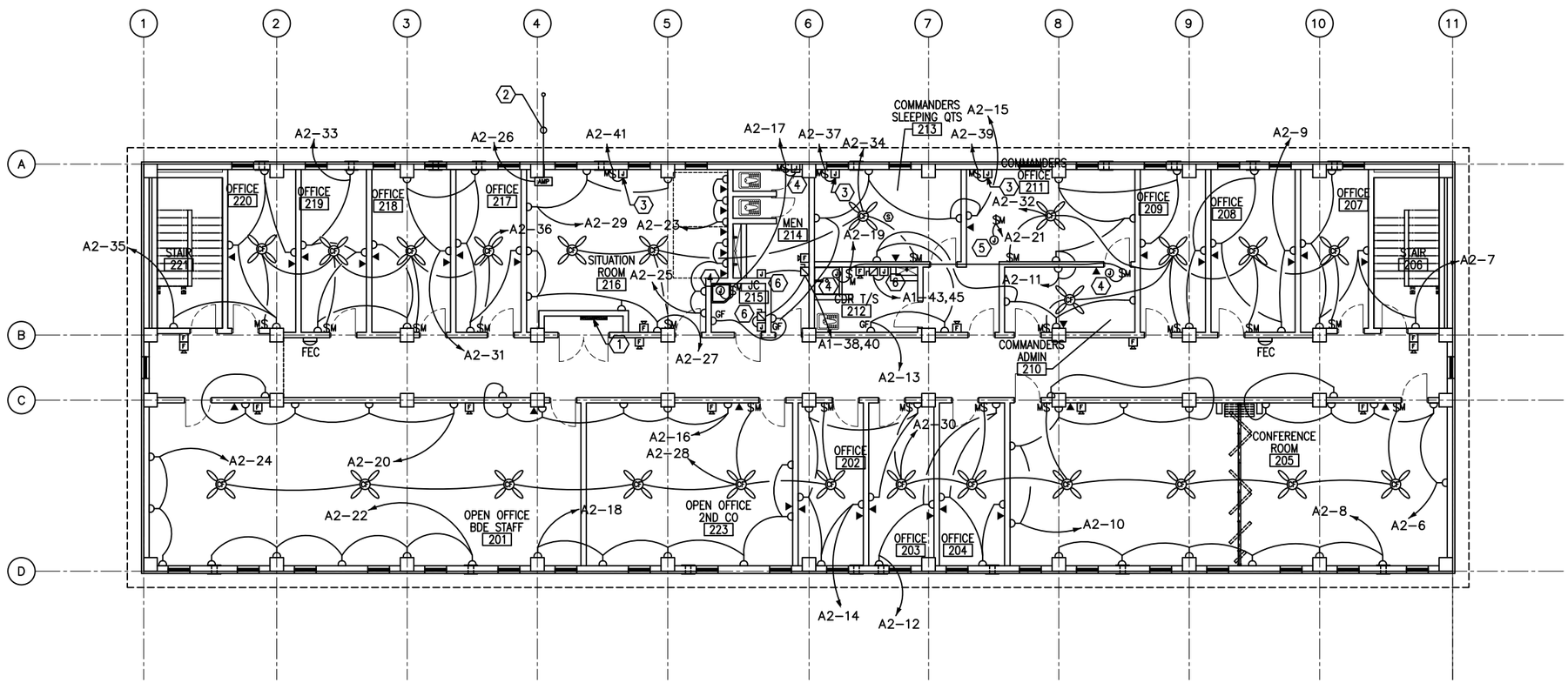

1 E4 E4 SECOND FLOOR POWER AND SYSTEMS PLAN

SCALE: 1:100

N

UNLESS OTHERWISE NOTED, LINEAR DIMENSIONS SHOWN ARE IN MILLIMETERS (MM)

1 0 1 2 3 4 5 6 7 8 9

1:100

US Army Corps of Engineers

Afghanistan Engineer District

SYMBOL	DESCRIPTION	DATE	APR

DESIGNED BY: JRG | DATE: 09-30-09
DWN BY: JRG | SUBMITTED BY: BAKER
CHK BY: JRG | FILE NO.: ANPSDE-104XXX

Michael Baker Jr., Inc
A unit of Michael Baker Corporation
Airside Business Park
100 Airside Drive
Moon Township PA 15108
www.mbakercorp.com

STANDARD DESIGN
ADMINISTRATION BUILDING – 2-STORY (1446 GSM)
WOOD FIRED HEAT OPTION

SECOND FLOOR POWER AND SYSTEMS PLAN

SHEET REFERENCE NUMBER:

E4

100% SUBMISSION

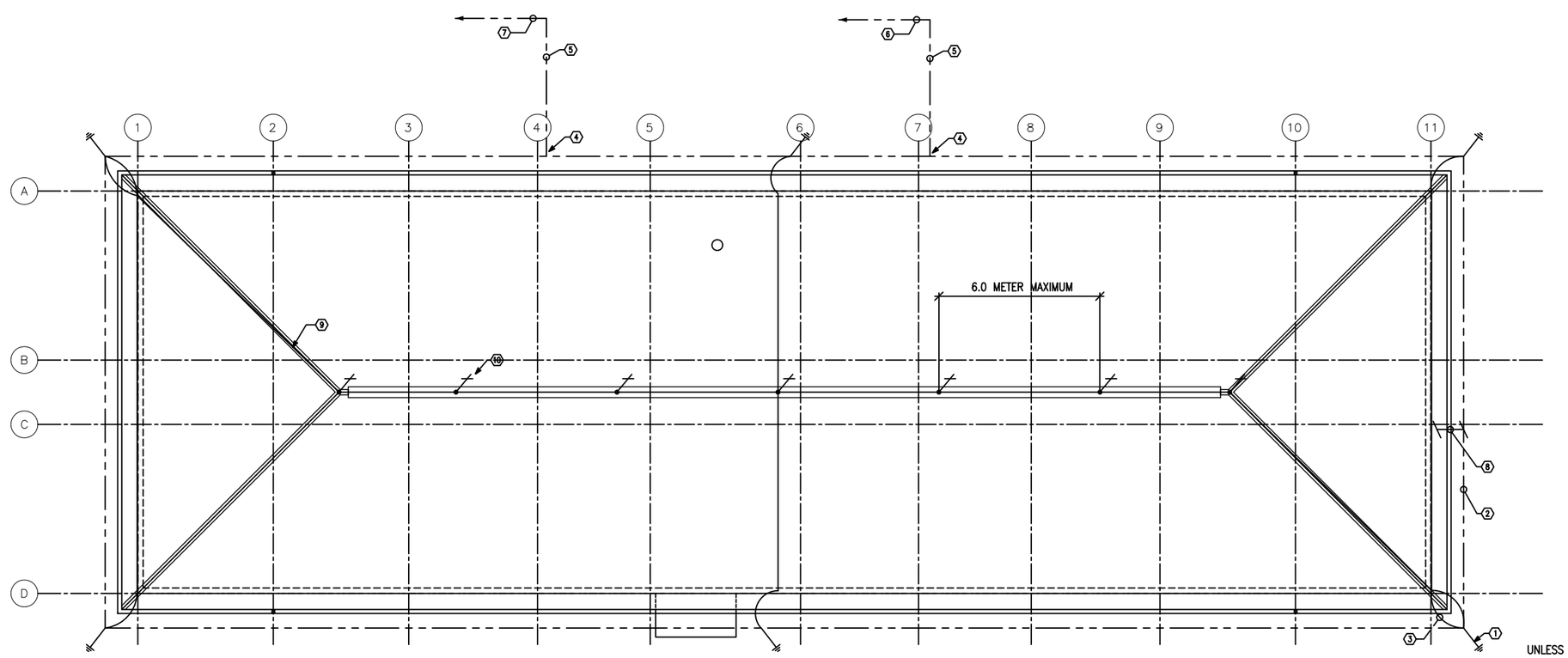

1 / E5 E5 ROOF LIGHTNING PROTECTION PLAN

SCALE: 1:100

N

GENERAL NOTE:

1. REFER TO DRAWING #E0 FOR ELECTRICAL SYMBOLS LIST.
2. FLAG POLE SHALL HAVE THE SAME LIGHTNING PROTECTION SYSTEM AS THE POLE SUPPORTING THE PUBLIC ADDRESS SPEAKER CLUSTER. SEE DRAWING #E6 FOR DETAILS.
3. REFER TO DRAWING #E6 FOR DETAILS RELATING TO LIGHTNING PROTECTION AND GROUNDING.

GENERAL NOTE:

1. INSTALL DOWN CONDUCTOR IN 25mm SCHEDULE 80 PVC CONDUIT TO 20mm DIAMETER X 3 METERS SOLID COPPER TINNED GROUND ROD (TYP.)
2. 1 120.0mm² BARE, TINNED COPPER COUNTERPOISE GROUND 700mm BELOW GRADE.
3. CADWELD TO BUILDING STRUCTURE AT 18 METERS O.C. AROUND ENTIRE PERIMETER OF BUILDING. (TYP.)
4. CADWELD TO BUILDING STRUCTURE AND/OR TO THE GROUND LOOP.
5. 1 120.0mm² BARE, TINNED COPPER IN 25mm PVC CONDUIT.
6. TO LIGHTNING PROTECTION ON THE POLE THAT THE SPEAKER CLUSTER IS LOCATED ON.
7. TO LIGHTNING PROTECTION ON THE FLAGPOLE.
8. 700mm MIN. (TYP)
9. 120mm2 LIGHTNING PROTECTION CABLE.
10. AIR TERMINAL (TYP.)

UNLESS OTHERWISE NOTED, LINEAR DIMENSIONS SHOWN ARE IN MILLIMETERS (MM)

1 0 1 2 3 4 5 6 7 8 9
1:100

US Army Corps of Engineers
Afghanistan Engineer District

SYMBOL	DESCRIPTION	DATE	APR

DESIGNED BY: JRG
DATE: 09-30-09
DWN BY: JRG
SUBMITTED BY: BAKER
CHK BY: JRG
FILE NO.: ANPSDE-105XXX

Michael Baker Jr., Inc.
A unit of Michael Baker Corporation
Airside Business Park
100 Airside Drive
Moon Township PA 15108
www.mbakercorp.com

STANDARD DESIGN
ADMINISTRATION BUILDING – 2-STORY (1446 GSM)
WOOD FIRED HEAT OPTION

ROOF LIGHTNING PROTECTION PLAN

SHEET REFERENCE NUMBER:
E5

100% SUBMISSION

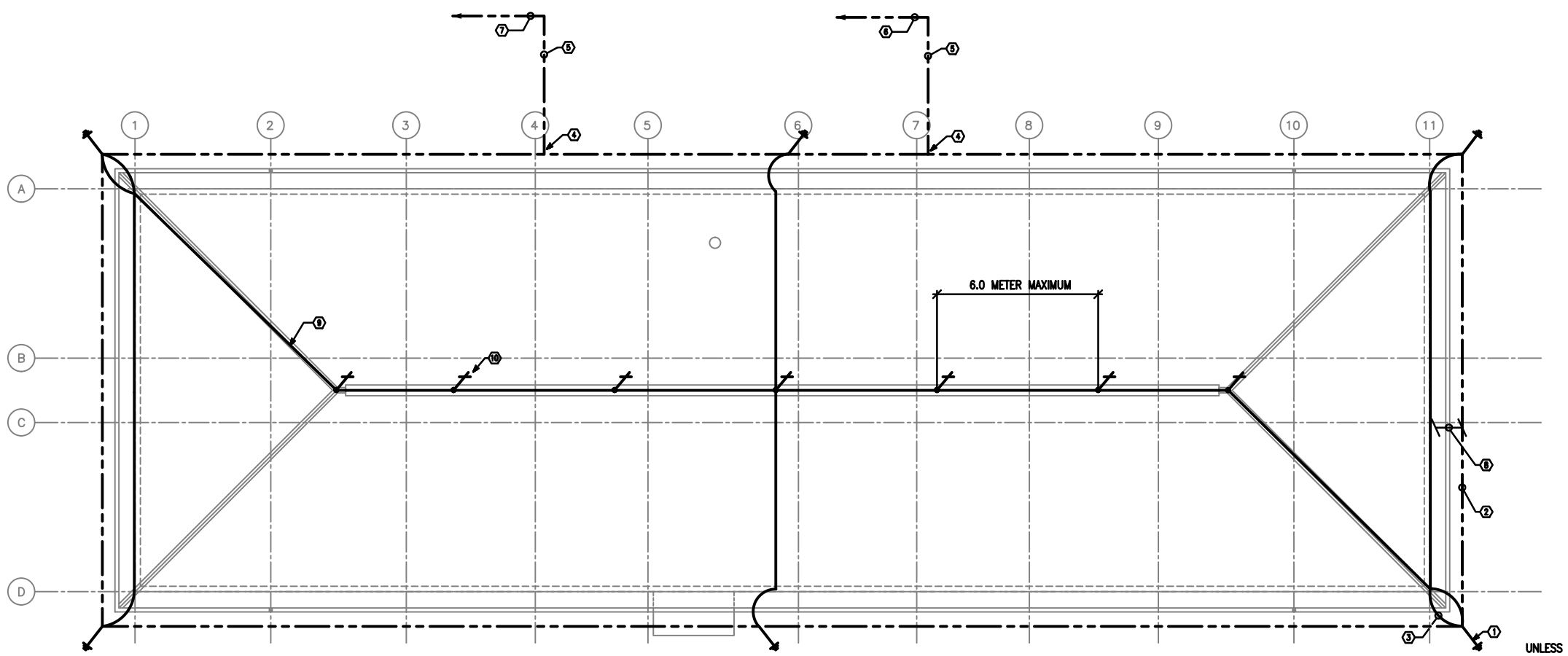

1 / E5 E5 ROOF LIGHTNING PROTECTION PLAN

SCALE: 1:100

N

GENERAL NOTE:

1. REFER TO DRAWING #E0 FOR ELECTRICAL SYMBOLS LIST.
2. FLAG POLE SHALL HAVE THE SAME LIGHTNING PROTECTION SYSTEM AS THE POLE SUPPORTING THE PUBLIC ADDRESS SPEAKER CLUSTER. SEE DRAWING #E6 FOR DETAILS.
3. REFER TO DRAWING #E6 FOR DETAILS RELATING TO LIGHTNING PROTECTION AND GROUNDING.

GENERAL NOTE:

1. INSTALL DOWN CONDUCTOR IN 25mm SCHEDULE 80 PVC CONDUIT TO 20mm DIAMETER X 3 METERS SOLID COPPER TINNED GROUND ROD (TYP.)
2. 1 120.0mm² BARE, TINNED COPPER COUNTERPOISE GROUND 700mm BELOW GRADE.
3. CADWELD TO BUILDING STRUCTURE AT 18 METERS O.C. AROUND ENTIRE PERIMETER OF BUILDING. (TYP.)
4. CADWELD TO BUILDING STRUCTURE AND/OR TO THE GROUND LOOP.
5. 1 120.0mm² BARE, TINNED COPPER IN 25mm PVC CONDUIT.
6. TO LIGHTNING PROTECTION ON THE POLE THAT THE SPEAKER CLUSTER IS LOCATED ON.
7. TO LIGHTNING PROTECTION ON THE FLAGPOLE.
8. 700mm MIN. (TYP)
9. 120mm LIGHTNING PROTECTION CABLE.
10. AIR TERMINAL (TYP.)

UNLESS OTHERWISE NOTED, LINEAR DIMENSIONS SHOWN ARE IN MILLIMETERS (MM)

1 0 1 2 3 4 5 6 7 8 9
1:100

US Army Corps of Engineers
Afghanistan Engineer District

SYMBOL	DESCRIPTION	DATE	APR.

DESIGNED BY: JRG	DATE: 09-30-09
DWN BY: JRG	SUBMITTED BY: BAKER
CHK BY: JRG	FILE NO.: ANPSDE-105XXX

Michael Baker Jr., Inc.
A unit of Michael Baker Corporation
Airside Business Park
100 Airside Drive
Moon Township PA 15108
www.mbakercorp.com

STANDARD DESIGN
ADMINISTRATION BUILDING - 2-STORY (1446 GSM)
ELECTRIC HEAT OPTION

ROOF LIGHTNING PROTECTION PLAN

SHEET REFERENCE NUMBER:
E5

100% SUBMISSION

PANELBOARD A1 SURFACE MOUNTED ____ ASYM. A.I.C. MIN.
____ AMP. MAIN LUGS (OR) 400 AMP. MAIN BREAKER W/ 400 AMP. TRIP
CIRCUIT BREAKER TYPE 380/220 VOLTS 3 PHASE ____ WIRE 50 HZ 400 AMP. BUS

CKT. NO.	TRIP AMPS	NO. POLES	WIRE MM²	GND MM²	CONDUIT MM	LOAD SERVED	LOAD-V.A. A0	LOAD-V.A. B0	LOAD-V.A. C0	LOAD-V.A. A0	LOAD-V.A. B0	LOAD-V.A. C0	LOAD SERVED	CONDUIT MM	GND MM²	WIRE MM²	NO. POLES	TRIP AMPS	CKT. NO.
1	20	1	4.0	4.0	20	LIGHTING	1.4			1.1			LIGHTING	20	4.0	4.0	1	20	2
3	20	1	4.0	4.0	20	LIGHTING		0.9			2.2		LIGHTING	20	4.0	4.0	1	20	4
5	20	1	4.0	4.0	20	LIGHTING			1.4			1.5	LIGHTING	20	4.0	4.0	1	20	6
7	20	1	4.0	4.0	20	RECEPTACLES	1.0			1.2			RECEPTACLES	20	4.0	4.0	1	20	8
9	20	1	4.0	4.0	20	RECEPTACLES		1.2			1.2		RECEPTACLES	20	4.0	4.0	1	20	10
11	20	1	4.0	4.0	20	RECEPTACLES			0.6			0.5	F.A.C.P.	20	4.0	4.0	1	20	12
13	20	1	4.0	4.0	20	EXHAUST FANS - 101, 102	0.5			8.0			WATER HEATER - 122	32	6.0	25.0	3	60	14
15	20	1	4.0	4.0	20	EXHAUST FANS - 105, 106		0.5			8.0								16
17	20	1	4.0	4.0	20	EXHAUST FANS - 111, 112			0.5			8.0							18
19	20	1	4.0	4.0	20	EXHAUST FANS - 118, 122	0.5			1.0			RECEPTACLES	20	4.0	4.0	1	20	20
21	20	1	4.0	4.0	20	EXHAUST FANS - 119, 120		0.5			1.2		RECEPTACLES	20	4.0	4.0	1	20	22
23	20	1	4.0	4.0	20	EXHAUST FANS - 129, 130			0.5			1.0	RECEPTACLES	20	4.0	4.0	1	20	24
25	20	1	4.0	4.0	20	EXHAUST FANS - 109	0.5			1.2			RECEPTACLES	20	4.0	4.0	1	20	26
27	20	1	4.0	4.0	20	RECEPTACLES		1.2			1.2		RECEPTACLES	20	4.0	4.0	1	20	28
29	20	1	4.0	4.0	20	RECEPTACLES			1.2			1.2	RECEPTACLES	20	4.0	4.0	1	20	30
31	20	1	4.0	4.0	20	RECEPTACLES	1.2			1.2			RECEPTACLES	20	4.0	4.0	1	20	32
33	20	1	4.0	4.0	20	RECEPTACLES		1.2			1.2		RECEPTACLES	20	4.0	4.0	1	20	34
35	20	1	4.0	4.0	20	RECEPTACLES			1.2			1.2	RECEPTACLES	20	4.0	4.0	1	20	36
37	40	1	10.0	6.0	20	MUA-1	5.0			1.2			RECEPTACLES	20	4.0	4.0	1	20	38
39	40	1	10.0	6.0	20	MUA-2		5.0			0.5		EXHAUST FANS - 104, 107	20	4.0	4.0	1	20	40
41	40	1	10.0	6.0	20	MUA-3			5.0			5.0	MUA-3	20	6.0	10.0	1	40	42
							10.1	10.5	10.4	14.9	15.5	18.4							

TOTAL CONN. LOAD PER PHASE (KVA): A0 72.2 B0 69.9 C0 65.1

TOTAL CONN. LOAD 207.2 KVA. 70 % DEMAND = ESTIMATED DEMAND LOAD 145.1 SUPPLIED FROM SWITCHGEAR MAIN DISTRIBUTION

• MAIN BREAKER SHALL BE 3P EARTH GROUND TYPE
•• PROVIDE WITH FEED-THROUGH LUGS
••• THE LOAD ON THIS PANEL INCLUDES A1 (SECTIONS 1 AND 2) AND A2 (SECTIONS 1 AND 2).

PANELBOARD A1 SURFACE MOUNTED ____ ASYM. A.I.C. MIN.
400 AMP. MAIN LUGS (OR) ____ AMP. MAIN BREAKER W/ 400 AMP. TRIP
CIRCUIT BREAKER TYPE 380/220 VOLTS 3 PHASE ____ WIRE 50 HZ 400 AMP. BUS

CKT. NO.	TRIP AMPS	NO. POLES	WIRE MM²	GND MM²	CONDUIT MM	LOAD SERVED	LOAD-V.A. A0	LOAD-V.A. B0	LOAD-V.A. C0	LOAD-V.A. A0	LOAD-V.A. B0	LOAD-V.A. C0	LOAD SERVED	CONDUIT MM	GND MM²	WIRE MM²	NO. POLES	TRIP AMPS	CKT. NO.
43	20	1	4.0	4.0	20	CEILING FANS-110	0.6			0.4			CEILING FANS-123	20	4.0	4.0	1	20	44
45	20	1	4.0	4.0	20	CEILING FANS-108,109,128		0.6			2.5		ELECTRIC HEATER-125	20	4.0	4.0	2	20	46
47	20	1	4.0	4.0	20	HP-1 (OUTDOOR)			2.5			2.5							48
49	20	1	4.0	4.0	20	HP-1 (OUTDOOR)	2.5			2.0			ELECTRIC HEATER-111	20	4.0	4.0	2	20	50
51	20	1	4.0	4.0	20	HP-2 (OUTDOOR)		2.5			2.0								52
53	20	1	4.0	4.0	20	HP-3 (OUTDOOR)			2.5			2.0	ELECTRIC HEATER-111	20	4.0	4.0	2	20	54
55	50	1	25.0	6.0	32	HP-2 (INDOOR)	6.5			2.0									56
57	200	3	95.0	16.0	50	PANEL A2	23.0				1.3		ELECTRIC HEATER-112	20	4.0	4.0	2	20	58
59								27.3				1.3							60
61									17.8	2.5			ELECTRIC HEATER-125	20	4.0	4.0	2	20	62
63						SPARE					2.5								64
65						SPARE						2.5	ELECTRIC HEATER-117	20	4.0	4.0	2	20	66
67						SPARE				2.5									68
69						SPARE					2.6		ELECTRIC HEATERS-120,122	20	4.0	4.0	2	20	70
71						SPARE						2.6							72
73						SPARE				2.6			ELECTRIC HEATERS-118,119	20	4.0	4.0	2	20	74
75						SPARE					2.6								76
77						SPARE						2.6	ELECTRIC HEATER-115,116	20	4.0	4.0	2	20	78
79						SPARE				2.6									80
81						SPARE							SPARE						82
83						SPARE							SPARE						84
							32.6	30.4	22.8	14.6	13.5	13.5							

TOTAL CONN. LOAD PER PHASE (KVA): A0 47.2 B0 43.9 C0 36.3

TOTAL CONN. LOAD 127.4 KVA. 70 % DEMAND = ESTIMATED DEMAND LOAD 89.2 SUPPLIED FROM PANEL A1 (SECTION 1)

PANELBOARD A2 (SECTION 1) SURFACE MOUNTED ____ ASYM. A.I.C. MIN.
____ AMP. MAIN LUGS (OR) 200 AMP. MAIN BREAKER W/ 200 AMP. TRIP
CIRCUIT BREAKER TYPE 380/220 VOLTS 3 PHASE ____ WIRE 50 HZ 200 AMP. BUS

CKT. NO.	TRIP AMPS	NO. POLES	WIRE MM²	GND MM²	CONDUIT MM	LOAD SERVED	LOAD-V.A. A0	LOAD-V.A. B0	LOAD-V.A. C0	LOAD-V.A. A0	LOAD-V.A. B0	LOAD-V.A. C0	LOAD SERVED	CONDUIT MM	GND MM²	WIRE MM²	NO. POLES	TRIP AMPS	CKT. NO.
1	20	1	4.0	4.0	20	LIGHTING	1.7			1.5			LIGHTING	20	4.0	4.0	1	20	2
3	20	1	4.0	4.0	20	LIGHTING		1.1			1.2		LIGHTING	20	4.0	4.0	1	20	4
5	20	1	4.0	4.0	20	LIGHTING			1.2			1.2	RECEPTACLES	20	4.0	4.0	1	20	6
7	20	1	4.0	4.0	20	RECEPTACLES	1.0			1.2			RECEPTACLES	20	4.0	4.0	1	20	8
9	20	1	4.0	4.0	20	RECEPTACLES		1.2			1.2		RECEPTACLES	20	4.0	4.0	1	20	10
11	20	1	4.0	4.0	20	RECEPTACLES			1.2			1.2	RECEPTACLES	20	4.0	4.0	1	20	12
13	20	1	4.0	4.0	20	RECEPTACLES	1.2			1.2			RECEPTACLES	20	4.0	4.0	1	20	14
15	20	1	4.0	4.0	20	RECEPTACLES		1.2			1.2		RECEPTACLES	20	4.0	4.0	1	20	16
17	20	1	4.0	4.0	20	EXHAUST FANS - 214, 215			0.5			1.2	RECEPTACLES	20	4.0	4.0	1	20	18
19	20	1	4.0	4.0	20	EXHAUST FAN - 212	0.5			1.0			RECEPTACLES	20	4.0	4.0	1	20	20
21	40	1	10.0	6.0	20	MUA-1		5.0			1.0		RECEPTACLES	20	4.0	4.0	1	20	22
23	20	1	4.0	4.0	20	RECEPTACLES			0.6			0.6	RECEPTACLES	20	4.0	4.0	1	20	24
25	20	1	4.0	4.0	20	RECEPTACLES	0.8			0.3			SPEAKER AMPLIFIER	20	4.0	4.0	1	20	26
27	20	1	4.0	4.0	20	RECEPTACLES		0.8			1.2		CEILING FAN-201,202	20	4.0	4.0	1	20	28
29	20	1	4.0	4.0	20	RECEPTACLES			0.6			1.2	CEILING FAN-203,204,205	20	4.0	4.0	1	20	30
31	20	1	4.0	4.0	20	RECEPTACLES	1.2			1.0			CEILING FAN-207-211	20	4.0	4.0	1	20	32
33	20	1	4.0	4.0	20	RECEPTACLES		1.2			0.6		CEILING FAN-213,216	20	4.0	4.0	1	20	34
35	20	1	4.0	4.0	20	RECEPTACLES			1.0			0.8	CEILING FAN-217-220	20	4.0	4.0	1	20	36
37	50	1	16.0	6.0	25	HP-1 (INDOOR)	6.5			2.6			ELECTRIC HEATERS-214,215	20	4.0	4.0	2	20	38
39	50	1	16.0	6.0	25	HP-2 (INDOOR)		6.5			2.6								40
41	50	1	16.0	6.0	25	HP-3 (INDOOR)			6.5				SPARE				1	20	42
							12.9	17.0	11.6	8.8	9.0	6.2							

TOTAL CONN. LOAD PER PHASE (KVA): A0 23.0 B0 27.3 C0 17.8

TOTAL CONN. LOAD 68.1 KVA. 70 % DEMAND = ESTIMATED DEMAND LOAD 47.7 SUPPLIED FROM PANEL A1 (SECTION 2)

• MAIN BREAKER SHALL BE 3P EARTH GROUND TYPE
•• PROVIDE WITH FEED-THROUGH LUGS
••• THE LOAD ON THIS PANEL INCLUDES A2 (SECTIONS 1 AND 2).

PANELBOARD A2 (SECTION 2) SURFACE MOUNTED ____ ASYM. A.I.C. MIN.
200 AMP. MAIN LUGS (OR) ____ AMP. MAIN BREAKER W/ 200 AMP. TRIP
CIRCUIT BREAKER TYPE 380/220 VOLTS 3 PHASE ____ WIRE 50 HZ 200 AMP. BUS

CKT. NO.	TRIP AMPS	NO. POLES	WIRE MM²	GND MM²	CONDUIT MM	LOAD SERVED	LOAD-V.A. A0	LOAD-V.A. B0	LOAD-V.A. C0	LOAD-V.A. A0	LOAD-V.A. B0	LOAD-V.A. C0	LOAD SERVED	CONDUIT MM	GND MM²	WIRE MM²	NO. POLES	TRIP AMPS	CKT. NO.
43	20	2	4.0	4.0	20	ELECTRIC HEATER - 212	1.3						SPARE				1	20	44
45								1.3					SPARE				1	20	46
47	20	1				SPARE							SPARE				1	20	48
49	20	1				SPARE							SPARE				1	20	50
51	20	1				SPARE							SPARE				1	20	52
53	20	1				SPARE							SPARE				1	20	54
55	20	1				SPARE							SPARE				1	20	56
57	20	1				SPARE							SPARE				1	20	58
59	20	1				SPARE							SPARE				1	20	60
61	20	1				SPARE							SPARE				1	20	62
63	20	1				SPARE							SPARE				1	20	64
65	20	1				SPARE							SPARE				1	20	66
67	20	1				SPARE							SPARE				1	20	68
69	20	1				SPARE							SPARE				1	20	
71	20	1				SPARE							SPARE				1	20	
73	20	1				SPARE							SPARE				1	20	
75	20	1				SPARE							SPARE				1	20	
77	20	1				SPARE							SPARE				1	20	
79	20	1				SPARE							SPARE				1	20	
81	20	1				SPARE							SPARE				1	20	
83	20	1				SPARE							SPARE				1	20	
							1.3	1.3	0.0	0.0	0.0	0.0							

TOTAL CONN. LOAD PER PHASE (KVA): A0 1.3 B0 1.3 C0 0.0

TOTAL CONN. LOAD 2.6 KVA. 70 % DEMAND = ESTIMATED DEMAND LOAD 1.9 SUPPLIED FROM PANEL A2 (SECTION 1)

US Army Corps of Engineers
Afghanistan Engineer District

SYMBOL	DESCRIPTION	DATE	APR

DESIGNED BY: JRG
DATE: 09-30-09
DWN BY: JRG
SUBMITTED BY: BAKER
CHK BY: JRG
FILE NO.: ANPSDE-608XXX

Michael Baker Jr., Inc.
A unit of Michael Baker Corporation
Airside Business Park
100 Airside Drive
Moon Township PA 15108
www.mbakercorp.com

STANDARD DESIGN
ADMINISTRATION BUILDING – 2-STORY (1446 GSM)
WOOD FIRED HEAT OPTION

PANEL SCHEDULES AND RISER DIAGRAM

SHEET REFERENCE NUMBER:
E8

100% SUBMISSION

AFGHAN NATIONAL POLICE

STANDARD BUILDING DESIGNS

DINING FACILITIES BUILDING TYPE 2 (559 GSM)

SHEET INDEX

G1 COVER SHEET

S1 GENERAL NOTES
S2 GENERAL NOTES
S3 GENERAL NOTES
S4 GENERAL NOTES
S5 FOUNDATION PLAN
S6 ROOF FRAMING PLAN
S7 ENLARGED KITCHEN ANNEX AND WOOD STORAGE ROOF FRAMING PLAN
S8 SECTIONS & DETAILS
S9 SECTIONS & DETAILS
S10 SECTIONS & DETAILS
S11 SECTIONS & DETAILS
S12 TYPICAL DETAILS

A1 FLOOR PLAN
A2 ROOF PLAN AND DETAILS
A3 EXTERIOR ELEVATIONS
A4 BUILDING & WALL SECTIONS
A5 DOOR, WINDOW & FINISH TYPES & DETAILS
A6 LATRINE DETAILS
A7 DFAC ENLARGED KITCHEN ANNEX AND WOOD STORAGE PLANS AND DETAILS
A8 MISCELLANEOUS DETAILS
A9 ENLARGED PROPANE STOVE PLAN AND DETAILS

SHEET INDEX

P1 FLOOR PLAN - PLUMBING
P2 FLOOR PLAN - PLUMBING
P3 DRAINAGE ISOMETRIC
P4 PLUMBING SYMBOLS & ABBREVIATIONS, ISOMETRICS, SCHEMATICS & DETAILS

M1 HVAC FLOOR PLAN
M2 HVAC DETAILS

E0 ELECTRICAL SYMBOLS AND ABBREVIATIONS
E1 LIGHTING PLAN
E2 POWER AND SYSTEMS PLAN
E3 DETAILS
E4 LIGHT FIXTURE SCHEDULE
E5 PANEL SCHEDULES AND RISER DIAGRAM

US Army Corps of Engineers
Afghanistan Engineer District

SYMBOL	DESCRIPTION	DATE	APR

DESIGNED BY: JDS
DWN BY: JDS
CHK BY: JDS
DATE: 09-30-09
SUBMITTED BY: BAKER
FILE NO.: ANPSDG-001XXX

Michael Baker Jr., Inc
A unit of Michael Baker Corporation
Airside Business Park
100 Airside Drive
Moon Township, PA 15108
www.mbakercorp.com

AFGHAN NATIONAL POLICE
STANDARD DESIGN
DINING FACILITIES BUILDING (559 GSM)
WOOD FIRED HEAT OPTION
COVER SHEET

SHEET REFERENCE NUMBER:
G1

100% SUBMISSION

STRUCTURAL ABBREVIATIONS:

ACI	AMERICAN CONCRETE INSTITUTE
AISC	AMERICAN INSTITUTE OF STEEL CONSTRUCTION
ALT	ALTERNATE
ASTM	AMERICAN SOCIETY FOR TESTING AND MATERIALS
AWS	AMERICAN WELDING SOCIETY
ARCH	ARCHITECTURAL
B	BOTTOM
BLDG	BUILDING
BOTT	BOTTOM
℄	CENTER LINE
CFMF	COLD FORM METAL FRAME
CFS	COLD FORMED STEEL
CIP	CAST IN PLACE
CIPL	CAST-IN-PLACE LINTEL
CJ	CONTROL JOINT
CLG	CEILING
CLR	CLEAR
CMU	CONCRETE MASONRY UNIT
COEFF	COEFFICIENT
COL	COLUMN
CONC	CONCRETE
CONT	CONTINUOUS
COORD	COORDINATE
CSJ	CONSTRUCTION JOINT
CTJ	CONTROL JOINT
DIA	DIAMETER
DIAG	DIAGONAL
DIM	DIMENSION
DWG	DRAWING
DWL	DOWEL
EA	EACH
ELEC	ELECTRICAL
ELEV	ELEVATION
EMBED	EMBEDMENT
EQUIV	EQUIVALENT
ETC	ET CETERA
E.W.	EACH WAY
EXT	EXTERIOR
FTG	FOOTING
GA	GAUGE
HORIZ	HORIZONTAL
HRS	HOURS
IBC	INTERNATIONAL BUILDING CODE
INT	INTERIOR
Kg	KILOGRAM
KIP	KIPS (1 KIP = 1,000 POUNDS)
kN	KILONEWTON
kPa	KILOPASCAL
L#	ANGLE (# INDICATES SIZE)
LLV	LONG LEG VERTICAL
M	METER
MAX	MAXIMUM
MBM	METAL BUILDING MANUFACTURER
MBMA	METAL BUILDING MANUFACTURERS ASSOCIATION
MECH	MECHANICAL
MFG	MANUFACTURER
MID	MIDDLE
MIN	MINIMUM
MISC	MISCELLANEOUS
MM	MILLIMETER
MPa	MEGAPASCAL
MTL	METAL
MWFRS	MAIN WIND FORCE RESISTING SYSTEM
N	NEWTON
N	NORTH
N/A	NOT APPLICABLE
#	NUMBER SYMBOL FOR REBAR SIZE
NTS	NOT TO SCALE
O.C.	ON CENTER
OPNG	OPENING
PL or PL	PLATE
PRE-ENG	PRE-ENGINEERED
REINF	REINFORCED
REQ'D	REQUIRED
SIM	SIMILAR
SPECS	SPECIFICATIONS
STD	STANDARD
STRUCT	STRUCTURAL
SW	SHEAR WALL
T	TOP
T/	TOP OF
T/ELEV	TOP ELEVATION
T&B	TOP AND BOTTOM
THK	THICK
TM	TRADE MARK
TYP	TYPICAL
UFC	UNIFIED FACILITIES CRITERIA
UON	UNLESS OTHERWISE NOTED
VERT	VERTICAL
W	WIDTH
W/	WITH

GENERAL NOTES

1.0 THIS PROJECT HAS BEEN DESIGNED FOR THE WEIGHTS AND MATERIALS INDICATED ON THE SHEETS AND FOR THE LIVE LOADS INDICATED IN THE DESIGN CRITERIA. IT IS THE CONTRACTOR'S RESPONSIBILITY TO DETERMINE ALLOWABLE CONSTRUCTION LOADS AND TO PROVIDE PROPER DESIGN AND CONSTRUCTION OF FALSEWORK, FORMWORK, STAGING, BRACING, SHEETING AND SHORING, ETC.

1.1 COORDINATE THESE SHEETS WITH THE ARCHITECTURAL, MECHANICAL, ELECTRICAL, PLUMBING, AND CIVIL SHEETS. ALL DIMENSIONS SHOWN ON THE SHEETS ARE MILLIMETERS UNLESS NOTED OTHERWISE.

1.2 THE CONTRACTOR SHALL VERIFY AND COORDINATE ALL FLOOR AND ROOF OPENING SIZES AND LOCATIONS, EQUIPMENT PAD SIZES AND LOCATIONS, ANCHOR BOLT LAYOUTS, ETC WITH EQUIPMENT SELECTED. THE CONTRACTOR SHALL MAKE ANY REQUIRED MODIFICATIONS AT NO ADDITIONAL COST.

1.3 THE CONTRACTOR SHALL REFER TO THE ARCHITECTURAL, MECHANICAL, ELECTRICAL AND PLUMBING SHEETS FOR SLEEVES, CURBS, INSERTS OR OPENINGS, ETC. NOT HEREIN INDICATED.

1.4 SLAB OPENINGS SMALLER THAN 250mm DIA TO BE CORE DRILLED IN FIELD UON. SEE MECHANICAL, ELECTRICAL AND PLUMBING SHEETS FOR LOCATIONS OF THESE OPENINGS.

1.5 WORK NOT INCLUDED ON THE SHEETS BUT IMPLIED TO BE SIMILAR TO THAT SHOWN AT CORRESPONDING PLACES ELSEWHERE ON THE SHEETS SHALL BE REPEATED.

1.6 IN CASE OF CONFLICT BETWEEN THE NOTES, DETAILS AND SPECIFICATIONS THE MOST RIGID REQUIREMENTS SHALL GOVERN.

1.7 SEE ARCHITECTURAL SHEETS FOR LOCATIONS OF MASONRY AND DRYWALL NON-LOAD BEARING PARTITIONS. PROVIDE COMPRESSIBLE FIRESAFING AT TOP OF WALL AS REQUIRED BY ARCHITECTURAL SHEETS.

1.8 COORDINATE FINISHED FLOOR DATUM ELEVATION 0.0m WITH THE CIVIL SHEETS.

1.9 DESIGN PRE-ENGINEERED METAL BUILDINGS IN ACCORDANCE W/ MBMA LATEST EDITION PER DESIGN CRITERIA ON SHEET S2.

2.0 FOUNDATION NOTES

2.1 THE GEOTECHNICAL ANALYSIS FOR THIS PROJECT IS THE RESPONSIBILITY OF THE CONTRACTOR AWARDED THE WORK. DESIGN VALUES USED IN THE STRUCTURAL ANALYSIS OF THE BUILDINGS HEREIN INDICATED HAVE BEEN ASSUMED AND SHALL BE CONFIRMED AND VERIFIED AS PART OF THE GEOTECHNICAL INVESTIGATION. VALUES WHICH DO NOT MEET THE REQUIREMENTS INDICATED ON SHEET S2 SHALL BE IMMEDIATELY BROUGHT TO THE ATTENTION OF THE CONTRACTING OFFICER FOR CONSIDERATION AND DETERMINATION ON THE NEXT APPROPRIATE COURSE OF ACTION.

2.2 SEE THE SPECIFICATION FOR ADDITIONAL REQUIREMENTS TO THOSE OUTLINED IN THE GEOTECHNICAL INVESTIGATION FOR EXCAVATION AND PREPARATION OF THE FOUNDATION AND THE SLAB ON GRADE SUBGRADE INCLUDING COMPACTION PROCEDURES.

2.3 EXCAVATIONS FOR FOOTINGS SHALL HAVE THE SIDES AND BOTTOMS TEMPORARILY LINED WITH 0.25mm POLYETHYLENE IF PLACEMENT OF CONCRETE DOES NOT OCCUR WITHIN 24 HRS OF THE EXCAVATION OF THE FOOTING.

2.4 FOUNDATION CONDITIONS NOTED DURING CONSTRUCTION WHICH DIFFER FROM THOSE DESCRIBED IN THE GEOTECHNICAL REPORT SHALL BE REPORTED TO THE GENERAL CONTRACTOR BEFORE FURTHER CONSTRUCTION IS ATTEMPTED. SEE PROJECT SPECIFICATIONS.

2.5 NO FOOTINGS OR SLABS SHALL BE POURED INTO OR AGAINST SUBGRADE CONTAINING FREE WATER, FROST, ICE OR LOOSE MATERIAL. FROST DEPTH ASSUMED TO BE 800MM

2.6 ALL SLAB-ON-GRADE, TRENCH BOTTOMS AND OTHER ON-GRADE INTERIOR HORIZONTAL SURFACES SHALL BE PLACED OVER A 0.25mm VAPOR RETARDER OVER A 100mm #57 STONE WATER BARRIER PLACED ON SUBGRADE PROPERLY PREPARED IN ACCORDANCE WITH THE CONTRACT SPECIFICATIONS. (UON)

2.7 SEE PLUMBING, ELECTRICAL & CIVIL SHEETS FOR REQUIRED UNDERSLAB UTILITIES.

2.8 SEE ARCHITECTURAL SHEETS FOR ALL WATERPROOFING DETAILS AND MATERIALS.

2.9 IF UNDERMINING OF FOOTINGS OCCURS, FILL VOIDS WITH 15MPa CONCRETE. DO NOT ATTEMPT TO REPLACE AND RECOMPACT SOIL.

3.0 CONCRETE

3.1 CONCRETE SHALL HAVE THE UNIT WEIGHT AND THE MINIMUM COMPRESSIVE STRENGTHS (f'c) AT 28 DAYS AS SHOWN IN THE CONCRETE MATERIALS SCHEDULE ON SHEET S3. SEE SPECIFICATIONS FOR ADDITIONAL INFORMATION. ENTRAIN AIR TO PRODUCE TOTAL AIR CONTENT ACCORDING TO THE SPECIFICATIONS FOR CONCRETE EXPOSED TO FREEZING TEMPERATURES (EXTERIOR FOOTINGS, SLAB TURNDOWNS, EXTERIOR SLABS AND SLABS-ON-GRADE, EXTERIOR RETAINING WALLS, AND EXTERIOR GRADE BEAMS.)

3.2 GROUT FOR BASE PLATES SHALL BE NON-SHRINKABLE GROUT AND SHALL HAVE A MINIMUM SPECIFIED COMPRESSIVE STRENGTH AT 28 DAYS OF 35MPa, UNLESS NOTED OTHERWISE.

3.3 NO CALCIUM CHLORIDE SHALL BE USED IN ANY CONCRETE.

3.4 MIXING, TRANSPORTING AND PLACING OF CONCRETE SHALL CONFORM TO ACI 301M-05

3.5 ALL CONCRETE WORK SHALL CONFORM TO THE REQUIREMENTS OF THE AMERICAN CONCRETE INSTITUTE (ACI) 318M MANUAL (metric), "BUILDING CODE REQUIREMENTS FOR REINFORCED CONCRETE", AND REQUIREMENTS OUTLINED IN THE CONTRACT SPECIFICATIONS. WHEN THERE IS A CONFLICT BETWEEN ACI AND THE SPECIFICATIONS, THE MORE STRINGENT SHALL GOVERN.

3.6 CHAMFER ALL EXPOSED EXTERNAL CORNERS OF CONCRETE WITH 20mm x45 DEGREE CHAMFER UON.

3.7 CONCRETE REINFORCEMENT BARS SHALL CONFORM TO ASTM A615M-96a, GRADE 420. REINFORCING BARS SHALL NOT BE TACK WELDED, WELDED, HEATED OR CUT, UNLESS INDICATED ON THE CONTRACT DOCUMENTS. ALL LAP SPLICES SHALL BE CLASS "B" UON.

3.8 HORIZONTAL FOOTING AND HORIZONTAL WALL REINFORCEMENT SHALL BE CONTINUOUS AND SHALL HAVE 90 DEGREE BENDS AND EXTENSIONS, OR CORNER BARS OF EQUIVALENT SIZE LAPPED WITH A CLASS B TENSION SPLICE AT CORNERS AND INTERSECTIONS. TOP BAR CRITERIA SHALL APPLY IF 300mm OR MORE OF FRESH CONCRETE IS PLACED BELOW BAR.

3.9 SLABS-ON-GRADE SHALL HAVE CONSTRUCTION JOINTS OR CRACK CONTROL JOINTS AS SHOWN ON THE SHEETS. CONSTRUCTION JOINTS CAN BE USED AT CONTROL JOINT LOCATIONS AT CONTRACTORS OPTION. SEE SLAB PLANS & JOINT DETAILS FOR ADDITIONAL INFORMATION. FOR AREAS NOT SHOWN ON SHEETS, THE MAXIMUM SPACING OF CONSTRUCTION/ CRACK CONTROL JOINTS SHALL BE 4800mm

3.10 SEE SPECIFICATIONS FOR ALL WATERPROOFING/DAMPPROOFING REQUIREMENTS.

3.11 ALL CONCRETE REINFORCEMENT SHALL BE DETAILED, FABRICATED, LABELED, SUPPORTED, AND SPACED IN FORMS AND SECURED IN PLACE IN ACCORDANCE WITH THE PROCEDURES AND REQUIREMENTS OUTLINED IN THE LATEST EDITION OF THE "BUILDING CODE REQUIREMENTS FOR REINFORCED CONCRETE", ACI 318M, AND THE "MANUAL OF STANDARD PRACTICE FOR DETAILING REINFORCED CONCRETE STRUCTURES", ACI 315M, LATEST EDITION.

3.12 SHOP DRAWINGS SHOWING REINFORCING DETAILS, INCLUDING STEEL SIZES, SPACING AND PLACEMENT, SHALL BE SUBMITTED FOR REVIEW PRIOR TO FABRICATION.

3.13 ALL DOWELS SHALL MATCH SIZE AND NUMBER OF MAIN REINFORCING, UNLESS NOTED OTHERWISE ON SHEETS.

3.14 ADDITIONAL BARS SHALL BE PROVIDED AROUND ALL FLOOR AND WALL OPENINGS AS SHOWN ON THE SHEETS.

3.15 SEE ARCHITECTURAL SHEETS FOR TYPE AND LOCATION OF ALL FLOOR FINISHES.

3.16 THE CONTRACTOR SHALL COORDINATE ADDITIONAL WALL/SLAB OPENINGS NOT SHOWN ON STRUCTURAL SHEETS. SEE MECHANICAL, ELECTRICAL, PLUMBING AND CIVIL SHEETS.

3.17 UNLESS NOTED OTHERWISE, ALL CURBS SHALL BE REINFORCED WITH AT LEAST (1)-#13 CONTINUOUS AND #13 AT 300mm O.C. DOWELS TO STRUCTURE BELOW.

3.18 THE SUB-CONTRACTOR SHALL VERIFY ALL OPENINGS, PAD SIZES, AND ANCHOR BOLTS WITH EQUIPMENT SELECTED.

3.19 FOR ALL WALLS & PIERS, PROVIDE DOWELS INTO FOOTING AT EACH VERT REINF BAR, UON DOWEL SIZE SHALL BE SAME AS VERT REINF.

3.20 ALL DEFORMED BAR ANCHORS SHALL BE TRS NELSON DIVISION OR EQUAL 15mm DIA (UON) CONFORMING TO ASTM A-496M WITH A MINIMUM TENSILE STRENGTH OF 550 MPa. INSTALL ANCHORS IN ACCORDANCE WITH MANUFACTURERS RECOMMENDATIONS BY AUTOMATIC END WELDING AS INDICATED ON THE DRAWINGS. NO UNAUTHORIZED OR FIELD WELDING SHALL BE MADE WITHOUT AUTHORIZATION FROM THE MANUFACTURER.

3.21 ALL REINFORCING INDICATED TO BE WELDED SHALL BE IN ACCORDANCE WITH ASTM A706M. "LOW ALLOY STEEL DEFORMED BARS FOR CONCRETE REINFORCEMENT". ANY INSTALLATIONS USING MANUFACTURER'S EQUIPMENT SHALL BE PER MANUFACTURER'S RECOMMENDATIONS.

3.22 PROVIDE CONCRETE POUR STOPS OR FORMS AS REQUIRED FOR INSTALLATION OF ALL CONCRETE WORK.

3.23 PROVIDE ADDITIONAL (2)-#13 x 600mm REINFORCING BARS IN SLAB-ON-GRADE AT ALL RE-ENTRANT CORNERS. PLACE BARS AT MID-DEPTH OF SLAB WITH A CLEARANCE OF 50mm FROM CORNER UON.

4.0 CONCRETE MASONRY

4.1 MASONRY CONSTRUCTION AND MATERIALS SHALL CONFORM TO ALL REQUIREMENTS OF THESE CONTRACT DOCUMENTS AND THE PROJECT SPECIFICATIONS.

4.2 THE SPECIFIED ULTIMATE COMPRESSIVE STRENGTH OF CONCRETE MASONRY (f'm) ON THE NET AREA IS A MINIMUM OF 10.4 MPa.

4.3 PROVIDE TWO #16 BARS CONTINUOUS IN ALL CMU AND CAST-IN-PLACE BOND BEAMS UON ON THE SHEETS. INTERMEDIATE BOND BEAMS SHALL BE CONTINUOUS AND SPACED AT A MAXIMUM OF 1200mm OC VERTICALLY. ALL BOND BEAMS SHALL BE A MINIMUM OF 200mm IN DEPTH WITH REINFORCING BEING CONTINUOUS AND HAVING STANDARD ACI HOOKS AT EACH END. PROVIDE STANDARD BAR SPLICES AS SPECIFIED.

4.4 FOR WALL REINFORCING, SEE MIN CMU WALL REINFORCING DETAIL ON SHEET S12.

4.5 CMU CELLS THAT REQUIRE VERTICAL REINFORCING BARS AS INDICATED ON THE CONTRACT DRAWINGS AND/OR SPECS SHALL HAVE REINF BAR PLACED IN CENTERS OF CMU CELLS AND CONTINUOUSLY GROUTED UON.

4.6 PROVIDE LADDER TYPE JOINT REINFORCEMENT AT 200mm FOR EXTERIOR & 400mm FOR INTERIOR ON CENTER MAXIMUM, UON MINIMUM ROD SIZE USED SHALL BE 9 GA. DEFORMED WIRE AND CONFORM TO ASTM A82M, UON.

4.7 PROVIDE CONTROL JOINTS AS INDICATED ON THE ARCHITECTURAL SHEETS.

4.8 GROUT FOR MASONRY SHALL BE NORMAL WEIGHT AND HAVE A MINIMUM COMPRESSIVE STRENGTH OF 25 MPa AT 28 DAYS. GROUT SHALL CONFORM TO ASTM C476M. GROUT LIFTS SHALL NOT EXCEED 1400mm.

4.9 USE MORTAR TYPE S CONFORMING TO ASTM C270M, SEE SPECIFICATIONS.

4.10 CONCRETE MASONRY UNITS SHALL BE NORMAL WEIGHT AND CONFORM TO ASTM C90M.

4.11 ALL CMU CELLS, OPEN CAVITIES, AND AIR SPACES SHALL BE GROUTED. TO STOP FRAGMENTS FROM MORTAR BLAST

4.12 BOND BEAM REINFORCING SHALL BE DISCONTINUOUS AT CONTROL JOINTS (UON). MAXIMUM CONTROL JOINT SPACING SHALL BE AS INDICATED ON THE ARCHITECTURAL SHEETS.

4.13 CONTRACTOR SHALL COORDINATE LOCATION OF ALL OPENINGS SEE ARCH, MECH, ELEC, AND PLUMBING SHEETS. FOR SIZE AND LOCATION OF OPENINGS.

4.14 MASONRY WALLS SHALL NOT BE BACK FILLED PRIOR TO THE MORTAR AND GROUT ATTAINING THEIR RESPECTIVE MAXIMUM DESIGN STRENGTHS PER SPECIFICATIONS.

5.0 STEEL DECK

5.1 STEEL DECK SHALL BE ASTM A611M, GRADES C & D OR A653M STRUCTURAL QUALITY HAVING A MINIMUM YIELD STRENGTH OF 345 MPa FOR FLOOR DECK AND 228 MPa FOR ROOF DECK AS PER THE STEEL DECK INSTITUTE (SDI) DESIGN MANUAL.

5.2 STEEL DECK SHALL BE ERECTED IN ACCORDANCE WITH THE MANUFACTURER'S SPECIFICATIONS AND ERECTION LAYOUTS AND CONNECTED TO SUPPORTING MEMBERS AS INDICATED.

5.3 COMPOSITE FLOOR DECK

5.3.1 STEEL FLOOR DECK SHALL BE 51mm RIB HEIGHT, 18 GA HOT-DIP GALVANIZED (SDI TYPE 2VLI-18) UON.

5.3.2 FLOOR DECK SHALL HAVE THE FOLLOWING MINIMUM PROPERTIES:

	18 GAUGE
MOMENT OF INERTIA, Ip	$760mm^4/mm$ WIDTH
SECTION MODULUS (TOP OF DECK), Sn	$27.5mm^3/mm$ WIDTH
SECTION MODULUS (BOTT OF DECK) Sp	$27.8mm^3/mm$ WIDTH

5.3.3 FLOOR DECK SHALL BE FASTENED TO THE SUPPORTS AS INDICATED IN THE BOTTOM OF THE FLUTES USING A SDI 36/7 PATTERN. DECK SIDELAPS SHALL BE ATTACHED USING #10 SELF-TAPPING TEK SCREWS WITH A MINIMUM 3-SIDE LAP CONNECTIONS PER SPAN.

5.3.4 SUSPENDED CEILINGS, LIGHT FIXTURES, DUCTS, CONDUITS, PIPING OR OTHER UTILITIES SHALL NOT BE SUPPORTED BY THE STEEL FLOOR DECK.

5.3.5 IN ADDITION TO MEETING THE MINIMUM REQUIREMENTS ABOVE, THE DECK MANUFACTURER SHALL DESIGN THE FLOOR DECK AND ATTACHMENTS TO STEEL FOR A MAXIMUM DEFLECTION DUE TO WET CONCRETE & 1 KPa CONSTANT LOAD OF L/240. FLOOR DECK SHALL NOT REQUIRE SHORING DURING CONCRETE PLACEMENT.

5.4 ROOF DECK

5.4.1 STEEL ROOF DECK SHALL BE 38mm RIB HEIGHT, 18 GA HOT-DIP GALVANIZED (SDI TYPE B-18) UON.

5.4.2 ROOF DECK SHALL HAVE THE FOLLOWING MINIMUM PROPERTIES:

	18 GAUGE
MOMENT OF INERTIA, Ip	$399mm^4/mm$ WIDTH
SECTION MODULUS (TOP OF DECK), Sn	$17.58mm^3/mm$ WIDTH
SECTION MODULUS (BOTT OF DECK) Sp	$17.10mm^3/mm$ WIDTH

5.4.3 ROOF DECK SHALL BE FASTENED TO THE SUPPORTS AS INDICATED IN THE BOTTOM OF THE FLUTES USING A SDI 36/7 PATTERN. DECK SIDELAPS SHALL BE ATTACHED USING #10 SELF-TAPPING TEK SCREWS WITH A MINIMUM 3-SIDE LAP CONNECTIONS PER SPAN.

5.4.4 SUSPENDED CEILINGS, LIGHT FIXTURES, DUCTS, CONDUITS, PIPING OR OTHER UTILITIES SHALL NOT BE SUPPORTED BY THE STEEL ROOF DECK.

5.4.5 IN ADDITION TO MEETING THE MINIMUM REQUIREMENTS ABOVE, THE DECK MANUFACTURER SHALL DESIGN THE ROOF DECK AND ATTACHMENTS TO STEEL FOR A MAXIMUM DEFLECTION DUE TO WET CONCRETE & 1 KPa CONSTANT LOAD OF L/240. ROOF DECK SHALL NOT REQUIRE SHORING DURING CONCRETE PLACEMENT.

6.0 STRUCTURAL STEEL

6.1 STRUCTURAL STEEL ROLLED SHAPES AND PLATES SHALL CONFORM TO THE MATERIAL INFORMATION SCHEDULE. DIMENSIONS AND PROPERTIES SHALL BE IN ACCORDANCE TO ASTM A36M.

6.2 ANCHOR BOLTS SHALL CONFORM TO ASTM A36M, HEAVY HEX.

6.3 CONNECTION BOLTS FOR STRUCTURAL STEEL MEMBERS SHALL BE 20 DIA ASTM A325M-N, UON; NUTS SHALL CONFORM TO ASTM A563M; WASHERS SHALL CONFORM TO ASTM F436M. CONNECTION BOLTS SHALL HAVE A HARDENED WASHER PLACED UNDER THE ELEMENT TO BE TIGHTENED.

6.4 DETAILING OF STRUCTURAL STEEL CONNECTIONS MUST BE CONSISTENT WITH RECOGNIZED, PUBLISHED METHODS SUCH AS IN THE AISC "STEEL CONSTRUCTION MANUAL", THIRTEENTH EDITION; "ENGINEERING FOR STEEL CONSTRUCTION", OR "VOLUME II CONNECTIONS MANUAL OF STEEL CONSTRUCTION".

6.4.1 THE CODE OF STANDARD PRACTICE OF AISC THIRTEENTH EDITION IS AMENDED SUCH THAT THE FABRICATOR/DETAILER IS RESPONSIBLE FOR THE DESIGN AND DETAILING OF ALL CONNECTIONS.

6.5 STANDARD FRAMING CONNECTIONS SHALL BE DETAILED BY THE FABRICATOR IN ACCORDANCE WITH THE AISC "STEEL CONSTRUCTION MANUAL", THIRTEENTH EDITION. CONNECTIONS SHALL BE DESIGNED TO DEVELOP A MINIMUM END REACTION OF 54kN.

6.5.1 UNLESS NOTED OTHERWISE AS THUS: (##kN), CONNECTIONS SHALL BE DESIGNED AND DETAILED FOR THE END REACTION DETERMINED FROM PART 2 – "ALLOWABLE UNIFORM LOAD TABLES" FROM THE AISC STEEL CONSTRUCTION MANUAL THIRTEENTH EDITION OR A MINIMUM OF 54 kN WHICH EVER IS GREATER.

6.6 ALL MEMBERS AND CONNECTIONS ON THE CONTRACT DRAWINGS AND CONNECTIONS NOT SHOWN SHALL BE DESIGNED AND SEALED BY A LICENSED PROFESSIONAL ENGINEER, DETAILED AND SUBMITTED FOR APPROVAL AND SHOWN ON THE SHOP DRAWINGS.

6.7 ALTERNATIVE CONNECTION DETAILS MAY BE SUBMITTED ON SHOP DRAWINGS BY THE CONTRACTOR ONLY IF ACCOMPANIED BY COMPLETE STRUCTURAL CALCULATIONS PREPARED AND SEALED BY A LICENSED PROFESSIONAL ENGINEER AND SUBMITTED FOR REVIEW.

6.8 CALCULATIONS FOR DETAILS MUST SHOW A RATIONAL ANALYSIS OF A COMPLETE LOAD PATH, INCLUDING LOCAL EFFECTS ON WEBS, FLANGES, ETC OF THE CONNECTED MEMBERS AND THE DEVICES (PLATES, SEATS, BRACKETS, BOLTS, WEBS, ETC) AFFECTING ALL CONNECTIONS. FAILURE TO SUBMIT SUCH CALCULATIONS FOR REVIEW CONCURRENT WITH SHOP DRAWING ERECTION PLANS AND DETAILS WILL BE CAUSE FOR REJECTION OF THAT SUBMITTAL.

6.8.1 ALL SHEAR TAB CONNECTIONS SUBMITTED AS AN ALTERNATE FOR APPROVAL SHALL BE DESIGNED USING A FLEXIBLE SUPPORT CONDITION.

6.8.2 BEAM AND GIRDER CONNECTIONS SHALL BE DESIGNED SUCH THAT ALL ADDITIONAL STRESSES DUE TO CONNECTION ECCENTRICITY SHALL BE DEVELOPED BY THE CONNECTION AND NOT INDUCE ANY ADDITIONAL STRESSES INTO SUPPORTING MEMBERS.

6.9 STRUCTURAL STEEL DETAILING, FABRICATION AND ERECTION SHALL CONFORM TO THE AISC "SPECIFICATION FOR STRUCTURAL STEEL BUILDINGS – ALLOWABLE STRESS DESIGN AND PLASTIC DESIGN" AND THE AISC "CODE OF STANDARD PRACTICE FOR STEEL BUILDINGS AND BRIDGES" – LATEST EDITIONS.

6.10 WELDING SHALL CONFORM TO THE AMERICAN WELDING SOCIETY STRUCTURAL WELDING CODE AWS D1.1. ELECTRODES FOR SHOP AND FIELD WELDS SHALL BE CLASS E70XX. ALL WELDING SHALL BE DONE BY QUALIFIED, CERTIFIED WELDERS PER THE ABOVE STANDARD.

6.11 SHOP AND FIELD TESTING OF WELDS AND BOLTS SHALL BE AS OUTLINED IN THE SPECIFICATIONS.

6.12 ALL FILLET WELDS SHALL BE A MINIMUM OF 5mm UNLESS NOTED OTHERWISE

6.13 THERE SHALL BE NO FIELD CUTTING OF STRUCTURAL STEEL MEMBERS FOR THE WORK OF OTHER TRADES WITHOUT PRIOR APPROVAL OF THE CONTRACTING OFFICER.

6.14 FOR FLOOR AND ROOF OPENINGS, THE FABRICATOR SHALL VERIFY OPENING LOCATIONS WITH EQUIPMENT SELECTED AND MAKE ANY NECESSARY MODIFICATIONS AT NO ADDITIONAL COST. THE CONTRACTOR SHALL COORDINATE MECHANICAL UNITS AND OPENINGS & ARCHITECTURAL ITEMS REQUIRED FOR COMPLETE INSTALLATION OF WORK. IT IS THE RESPONSIBILITY OF FABRICATOR TO RECEIVE ALL NECESSARY INFORMATION PRIOR TO FABRICATION OF THE STEEL.

6.15 ALL STRUCTURAL STEEL SHALL BE PRIMED AS PER THE SPECIFICATIONS.

6.16 ALL PLATES NOT INDICATED SHALL BE 13mm MIN THICKNESS. ALL ANGLES NOT INDICATED SHALL BE 76x76x7.9 MIN. ALL WELDS NOT INDICATED SHALL BE 6mm MIN ALL AROUND UON.

6.17 SEE MECHANICAL, ELECTRICAL, AND PLUMBING SHEETS FOR ADDITIONAL OPENINGS NOT SHOWN. ALL OPENINGS SHALL BE FRAMED 4 SIDES WITH C200x17'S UON.

US Army Corps of Engineers

Afghanistan Engineer District

SYMBOL	DESCRIPTION	DATE	APR

DESIGNED BY: WJJ	DWN BY: RCG	CHK BY: CWW	DATE: 09-30-09
SUBMITTED BY: BAKER	FILE NO.: ANPSDS-001XXX		

Michael Baker Jr, Inc
A unit of Michael Baker Corporation
Airside Business Park
100 Airside Drive
Moon Township, PA 15108
www.mbakercorp.com

AFGHAN NATIONAL POLICE
STANDARD DESIGN
DINING FACILITIES BUILDING (559 GSM)
WOOD FIRED HEAT OPTION

GENERAL NOTES

SHEET REFERENCE NUMBER:

S1

100% SUBMISSION

STRUCTURAL DESIGN CRITERIA

ALL DESIGNS SHALL CONFORM TO THE PROVISIONS OF THE IBC 2006 AS APPLICABLE

1.0 DESIGN LOADS

1.1 DEAD LOADS

1.1.1 ROOF DEAD LOADS – PRE-ENGINEERED FRAMING

	MAXIMUM GRAVITY LOAD	MINIMUM GRAVITY LOAD
STEEL FRAMING	0.20 KPa	0.15 KPa
METAL DECKING/ROOFING	0.14 KPa	0.05 KPa
MECH/ELEC/PLUMBING	0.15 KPa	0.10 KPa
METAL PANEL CEILING	0.15 KPa	0.15 KPa
MISC	0.40 KPa	0.00 KPa
	1.00 KPa	0.45 KPa

1.2 LIVE LOADS (PER IBC 2006)

1.2.1 ROOF LIVE LOADS: ALL BUILDINGS

GREATER OF 1.0 KPa MINIMUM OR SNOW LOAD

1.2.2 SLAB-ON-GRADE LIVE LOADS

ALL BUILDINGS 4.80 KPa

1.3 SNOW LOADS (PER IBC 2006)

1.3.1 DESIGN PARAMETERS

GROUND SNOW LOAD (per UFC 3-310-01)	1.0 KPa
SNOW IMPORTANCE FACTOR	1.0
SNOW EXPOSURE FACTOR	1.0

1.4 SEISMIC LOADS (PER IBC 2006 & UFC 3-310-04)

1.4.1 SEISMIC PARAMETERS – PRE-ENGINEERED BUILDINGS

SEISMIC OCCUPANCY CATEGORY	II
SEISMIC IMPORTANCE FACTOR (I)	1.0
SEISMIC SITE CLASS	D
Ss	1.280
S1	0.510
Sds	0.853
Sd1	0.510
SEISMIC DESIGN CATEGORY	D
SEISMIC RESISTING SYSTEM	MOMENT RESISTING FRAME INTERMEDIATE STEEL MOMENT FRAMES
RESPONSE MODIFICATION FACTOR (R)	4.5
RESPONSE COEFFICIENT (Cs)	0.133
SEISMIC ANALYTICAL PROCEDURE	EQUIV LATERAL FORCE
SEISMIC BASE SHEAR	222.4 kN

1.5 WIND LOADS (PER IBC 2006)

1.5.1 DESIGN PARAMETERS

BASIC WIND SPEED	137 Km/h
WIND IMPORTANCE FACTOR	1.0
WIND EXPOSURE CATEGORY	D
DIRECTIONALITY COEFFICIENT (Kd)	0.85
TOPOGRAPHIC FACTOR (Kzt)	1.0

1.5.2 DESIGN WIND PRESSURE – MAIN WINDFORCE RESISTING SYSTEM

LOCATION	CORNER ZONE WIDTH "a"	MEAN ROOF HEIGHT "h"	WINDWARD WALL (@ MEAN ROOF HEIGHT)	LEEWARD WALL (@ MEAN ROOF HEIGHT)	ROOF
FIELD ZONE	N/A	5110mm	600 N/m^2	−570 N/m^2	−780 N/m^2
CORNER ZONE	1440mm	5110mm	830 N/m^2	−680 N/m^2	−1130 N/m^2

a = 10% OF LEAST HORIZONTAL DIMENSION OR 0.4h, WHICHEVER IS SMALLER, BUT NOT LESS THAN EITHER 4% OF LEAST HORIZONTAL DIMENSION OR 0.9M.
h = MEAN ROOF HIEGHT, IN METERS, EXCEPT THAT EAVE HIEGHT SHALL BE USED FOR ANGLE GREATER THAN 10°.

1.5.3 DESIGN WIND PRESSURE – WALL COMPONENTS AND CLADDING

EXTERIOR WALL SYSTEMS & THEIR ATTACHMENTS TO THE PRIMARY STRUCTURE SHALL BE DESIGNED FOR THE PRESSURES SHOWN IN THE DIAGRAM BELOW:

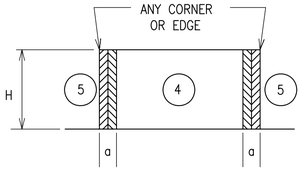

LOCATION	WINDWARD PRESSURE N/m^2 (inward)		LEEWARD PRESSURE N/m^2 (outward)		a
	4	5	4	5	
MAIN BUILDING					(mm)
AREA = 1 m^2	1050	1050	−1140	−1410	1440
AREA = 2 m^2	1010	1010	−1100	−1310	1440
AREA = 5 m^2	910	910	−1000	−1120	1440
AREA = 10 m^2	820	820	−910	−930	1440

NOTES:
1. DESIGN WIND PRESSURES ABOVE REPRESENT THE NET PRESSURE (SUM OF INTERNAL AND EXTERNAL PRESSURE) APPLIED NORMAL TO ALL SURFACES.
2. LINEAR INTERPOLATION BETWEEN VALUES OF TRIBUTARY AREA IS PERMISSIBLE.
3. PLUS AND MINUS SIGNS SIGNIFY PRESSURE TOWARD AND AWAY FROM THE EXTERIOR SURFACE, RESPECTIVELY.

1.5 WIND LOADS (CONT)

1.5.4 DESIGN WIND PRESSURE – ROOF COMPONENTS AND CLADDING

ROOF COMPONENTS & THEIR ATTACHMENTS SHALL BE DESIGNED FOR THE PRESSURES SHOWN IN THE ADJACENT DIAGRAM & TABLE BELOW:

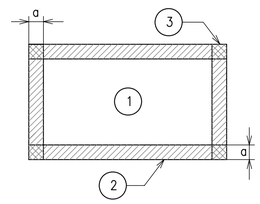

ROOF MEAN HEIGHT

LOCATION	GROSS UPLIFT PRESSURE N/m^2 (upward)			a
	1	2	3	
MAIN BUILDING				(mm)
AREA = 1 m^2	−970	−1670	−2480	1440
AREA = 2 m^2	−950	−1540	−2320	1440
AREA = 5 m^2	−880	−1260	−1990	1440
AREA = 10 m^2	−880	−1240	−1960	1440

NOTES:
1. DESIGN WIND PRESSURES ABOVE REPRESENT THE NET PRESSURE (SUM OF INTERNAL AND EXTERNAL PRESSURE) APPLIED NORMAL TO ALL SURFACES.
2. LINEAR INTERPOLATION BETWEEN VALUES OF TRIBUTARY AREA IS PERMISSIBLE.
3. PLUS AND MINUS SIGNS SIGNIFY PRESSURE TOWARD AND AWAY FROM THE EXTERIOR SURFACE, RESPECTIVELY.

2.0 FOUNDATION DESIGN CRITERIA (TO BE CONFIRMED BY THE CONTRACTOR)

THE GEOTECHNICAL ANALYSIS FOR THIS PROJECT IS THE RESPONSIBILITY OF THE CONTRACTOR AWARDED THE WORK. DESIGN VALUES USED IN THE STRUCTURAL ANALYSIS OF THE BUILDINGS HEREIN INDICATED HAVE BEEN ASSUMED AND SHALL BE CONFIRMED AND VERIFIED AS PART OF THE GEOTECHNICAL INVESTIGATION. VALUES WHICH DO NOT MEET THE REQUIREMENTS INDICATED BELOW SHALL BE IMMEDIATELY BROUGHT TO THE ATTENTION OF THE CONTRACTING OFFICER FOR CONSIDERATION AND DETERMINATION ON THE NEXT APPROPRIATE COURSE OF ACTION.

2.1.1 SOIL DESIGN PARAMETERS

NET ALLOWABLE SOIL BEARING CAPACITY	96.0 KPa
UNIT WEIGHT OF SOIL (moist)	1800 Kg/m^3
COEFF ACTIVE EARTH PRESSURE (Kpa)	0.30
COEFF PASSIVE EARTH PRESSURE (Kpp)	3.33
COEFF AT-REST EARTH PRESSURE (Kpr)	.55
COEFF OF SOIL FRICTION	.35
SUBGRADE MODULUS	4120 g/cm^3
MINIMUM BEARING DEPTH BELOW GRADE	800mm
SEISMIC SITE CLASS (based on in-situ soil)	D

US Army Corps of Engineers
Afghanistan Engineer District

SYMBOL	DESCRIPTION	DATE	APR

DESIGNED BY: WJJ
DWN BY: RCG
CHK BY: CWW
DATE: 09-30-09
SUBMITTED BY: BAKER
FILE NO.: ANPSDS-002XXX

Michael Baker Jr., Inc
A unit of Michael Baker Corporation
Airside Business Park
100 Airside Drive
Moon Township, PA 15108
www.mbakercorp.com

AFGHAN NATIONAL POLICE
STANDARD DESIGN
DINING FACILITIES BUILDING (559 GSM)
WOOD FIRED HEAT OPTION

GENERAL NOTES

SHEET REFERENCE NUMBER:
S2

100% SUBMISSION

MINIMUM LAP SPLICES OF REINFORCING BARS IN TENSION (PER ACI 318M–05)

f'c = 28 MPa CONCRETE

BAR SIZE \ CENTER TO CENTER BAR SPACING	(---TOP BARS--) LESS THAN 4db	(---TOP BARS--) 4db OR MORE	(--OTHER BARS--) LESS THAN 4db	(--OTHER BARS--) 4db OR MORE	4db
#10	460	460	410	410	40
#13	660	610	510	480	50
#16	1020	760	790	580	60
#19	1450	910	1120	710	80
#22	1960	1090	1500	840	90
#25	2590	1450	1980	1120	100
#29	3280	1830	2510	1420	110
#32	4140	2340	3200	1780	130
#36	5080	2840	3910	2180	140

NOTES:

1. LAP SPLICES ABOVE ARE IN MILLIMETERS UON.
2. YIELD STRENGTH OF REINFORCEMENT, fy, IS 420 MPa (LAP SPLICE LENGTH IS IN MILLIMETERS)
3. CONCRETE IS NORMAL WEIGHT (2400 Kg/m^3)
4. TOP BAR INDICATES HORIZONTAL REINFORCEMENT WHICH IS PLACED ABOVE 300mm OR MORE OF FRESH CONCRETE.
5. SEE COLUMN SCHEDULE FOR COLUMN AND SHEAR WALL VERTICAL LAP SPLICE.
6. STRAIGHT DEVELOPMENT LENGTH OF AN UNLAPPED BAR IS EQUAL TO VALUE FROM TABLE DIVIDED BY 1.3.
7. CATEGORY FOR BARS SPACED LESS THAN 4d, OR ON CENTER CORRESPONDS TO CATEGORY 1 IN THE CRSI HANDBOOK WHEREAS FOR BARS SPACED 4d, OR MORE ON CENTER CORRESPOND TO CRSI CATEGORY 5.

STEEL MATERIALS SCHEDULE

STRUCTURAL ELEMENT	FY YIELD STRENGTH (MPa)	REMARKS
BEAMS & GIRDERS	250	ASTM A36M ASTM A6M
COLUMNS	240	ASTM A53–95 GRADE B ASTM A6M
MISC BRACING	250	ASTM A572M ASTM A6M
CONNECTIONS, PLATES, & ALL OTHERS	250	ASTM A36M ASTM A6M
ANCHOR BOLTS	–	ASTM A36M or A307M ASTM A6M
PIPES	240	ASTM A53–95 GRADE B ASTM A6M
TUBING	345	ASTM A500–93 GRADE C ASTM A6M
HIGH STRENGTH BOLTS	–	ASTM A325M–N
WELDING ELECTRODES	–	AWS D1.1–90 E70xx

CONCRETE COVER SCHEDULE

MINIMUM CONCRETE COVER PROTECTION FOR REINFORCEMENT BARS SHALL BE AS FOLLOWS: (SEE ACI 318M–05, SECTION 7.7 FOR CONDITIONS NOT NOTED). DIMENSIONS FOR BAR PLACEMENT GIVEN IN SECTIONS AND DETAILS SHALL SUPERSEDE MINIMUM COVER REQUIREMENTS GIVEN HERE. DIMENSIONS ARE IN mm.

FOOTINGS (EARTH FORMED)		70
COLUMNS / PIERS (TO TIES)		40
GRADE BEAMS OR SLAB TURNED DOWN EDGES:		
TOP		40
BOTTOM (EARTH FORMED)		70
SIDES (EARTH FORMED)		70
SIDES (BOARD FORMED)	#16 BAR & SMALLER	40
	#19 THRU #36 BAR	50
ELEVATED BEAMS & SLABS:		
BEAM TIES & STIRRUPS (NOT EXPOSED TO WEATHER)		40
BEAM TIES & STIRRUPS (EXPOSED TO WEATHER)		50
FLOOR SLABS (NOT EXPOSED TO WEATHER)		20
FLOOR SLABS (EXPOSED TO WEATHER)		
#19 & LARGER		50
#13 & SMALLER		40
ROOF SLAB BARS		25
SLABS–ON–GRADE (NO EXPOSURE TO WEATHER) FROM TOP		20
SLABS–ON–GRADE (EXPOSURE TO WEATHER) FROM TOP		40
UTILITY TUNNEL WALLS, RETAINING WALLS AND SHEAR WALLS, (NO SURFACES SHALL BE EARTH FORMED) EARTH SIDE AND FRONT SIDE (EXPOSED TO WEATHER):		
#16 BAR AND SMALLER		40
#19 THRU #36 BAR		50

PROVIDE STANDARD BAR CHAIRS AND SPACERS AS REQUIRED TO MAINTAIN CONCRETE PROTECTION SPECIFIED.

CONCRETE MATERIALS SCHEDULE

STRUCTURAL ELEMENT	f'c CONCRETE COMPRESSIVE STRENGTH @ 28 DAYS (MPa)
SLAB–ON–GRADE/TURN–DOWN SLABS	28
FLOOR SLABS	28
ALL FOOTINGS (UON)	28
MISC. CURBS, WALLS AND PADS UON	28
CAST–IN–PLACE LINTEL	28
CONCRETE FRAMING – BEAMS AND COLUMNS	28

NOTES:

1. ALL CONCRETE SHALL BE NORMAL WEIGHT CONCRETE. (2400 Kg/m^3 UON)
2. ALL CONCRETE SHALL HAVE A MAX WATER–CEMENT RATIO OF 0.45.

STANDARD HOOKS IN TENSION PER (ACI 318M–05)

HOOK DEVELOPMENT LENGTH Ldh (mm)	
BAR SIZE	f'c 28 MPa
#10	180
#13	250
#16	300
#19	380
#22	430
#25	480
#29	560
#32	610
#36	690

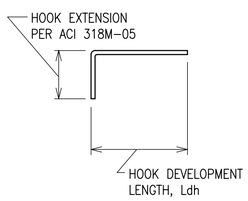

NOTES:

1. CONCRETE IS NORMAL WEIGHT CONCRETE.
2. BAR YIELD STRENGTH, fy = 420 MPa
3. SIDE COVER REQUIREMENTS OF ACI SECT. 12.5.3.2 ARE ASSUMED TO NOT BE MET.
4. TIE OR STIRRUP REQUIREMENTS OF ACI SECT. 12.5.3.2 ARE ASSUMED TO NOT BE MET.
5. REDUCTION FOR EXCESS REINFORCEMENT IS NOT TAKEN.
6. HOOK DEVELOPMENT LENGTH IS VALID FOR 180° HOOKS ALSO.

SPREAD FOOTING AND PIER SCHEDULE

MARK	FOOTING SIZE LENGTH (mm)	FOOTING SIZE WIDTH (mm)	FOOTING SIZE THICKNESS (mm)	FOOTING REINFORCING	PIER SIZE (mm)	PIER T/PIER	PIER VERT. BARS	PIER TIES	REMARKS
F1	2500	2500	300	(7)–#16 E.W. T&B	900	–150	(8)–#19	2 SETS #13 @ 125	HAIRPINS REQ'D. SEE DETAILS
F2	1800	1800	300	(5)–#16 E.W. T&B	900	–150	(8)–#19	#13 @ 250 TOP 2 @ 75	-----
F3	1200	1200	300	(4)–#16 E.W. T&B	900	–150	(8)–#19	#13 @ 250 TOP 2 @ 75	-----

NOTES:

1. DIMENSIONS NOTED ARE MILLIMETERS (mm) UON
2. T/PIER ELEV GIVEN IN REFERENCE TO 0.0 mm DATUM OR FINISH FLOOR ELEV/SLAB ELEV, DISTANCE ABOVE OR BELOW INDICATED AS NEGATIVE OR POSITIVE.
3. PIER SIZE INDICATED IS SQUARE (DIMENSION SAME IN BOTH DIRECTIONS) UON

US Army Corps of Engineers
Afghanistan Engineer District

SYMBOL	DESCRIPTION	DATE	APR

DESIGNED BY: BAKER
DWN BY: RCG
CHK BY: CWW
DATE: 09–30–09
SUBMITTED BY: BAKER
FILE NO.: ANPSDS–003XXX

Michael Baker Jr., Inc.
A unit of Michael Baker Corporation
Airside Business Park
100 Airside Drive
Moon Township, PA 15108
www.mbakercorp.com

AFGHAN NATIONAL POLICE
STANDARD DESIGN
DINING FACILITIES BUILDING (559 GSM)
WOOD FIRED HEAT OPTION

GENERAL NOTES

SHEET REFERENCE NUMBER:
S3

100% SUBMISSION

CMU LINTEL SCHEDULE

OPENING TYPE OR SIZE, BEAM LOCATION OR TYPE	MAX SPAN (mm)	LINTEL DEPTH (mm)	REINFORCING BOTTOM
EXT WALL OPENING, 1-STORY BLDG	1800	400	(2)-#13
EXT WALL OPENING, 1-STORY BLDG	900	200	(2)-#13
INT WALL OPENING, NON-BEARING	2400	400	(2)-#13
INT WALL OPENING, NON-BEARING	1800	200	(2)-#13
INT WALL OPENING, NON-BEARING	900	200	(2)-#13
INT SERVERY OPENING	4880	600	(3)-#19
INT WALL OPENING, SHEAR WALL	900	200	(2)-#13
INT WALL OPENING, SHEAR WALL	1800	200	(2)-#13
INT WALL OPENING, SHEAR WALL	2400	400	(2)-#16
EXT KITCHEN ANNEX	1800	1000	(2)-#16

1. STRUCTURAL SHEETS DO NOT INDICATE ALL OPENINGS IN MASONRY WALLS. VERIFY NUMBER, SIZE AND LOCATION OF ALL OPENINGS IN MASONRY WALLS FROM ARCHITECTURAL SHEETS AND APPROVED PLUMBING, MECHANICAL, AND ELECTRICAL SHOP DRAWINGS.
2. PROVIDE 200mm BEARING EA END FOR 200mm DEEP CMU LINTEL PROVIDE 400mm BEARING EA END FOR 400mm DEEP CMU LINTEL.
3. FOR HEAD DETAILS REFER TO ARCHITECTURAL SHEETS.
4. REINFORCING SHALL BE ASTM A615M, GRADE 420. CONCRETE FOR CAST-IN-PLACE BEAMS SHALL HAVE A MINIMUM COMPRESSIVE STRENGTH OF 28 MPa AT 28 DAYS.
5. CONTRACTOR SHALL SUBMIT FOR APPROVAL SHOP DRAWINGS AND SCHEDULES SHOWING SIZE, DETAILS, LOCATIONS, ETC FOR ALL CAST-IN-PLACE BEAMS IN CMU WALLS.

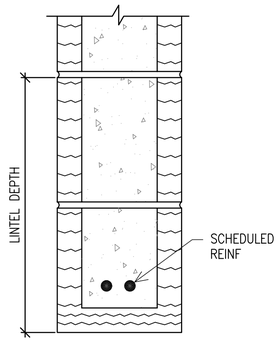

TYPICAL CMU LINTEL DETAIL

SCALE: NTS

NOTE:
1. SEE SCHEDULE THIS SHEET FOR REINFORCING & LINTEL DEPTH

MAXIMUM CMU WALL UNSUPPORTED HEIGHT OR LENGTH

	WALL THICKNESS (mm)	EXTERIOR WALL NON-LOAD BEARING (mm)	INTERIOR NON-LOAD BEARING WALL (mm)
MAX HEIGHT OR LENGTH BETWEEN SUPPORTS	200	4800	7200

NOTE: CMU WALL MAXIMUM LATERAL SUPPORT SPACING GIVEN IN SECTIONS AND DETAILS SHALL SUPERSEDE THE ABOVE SCHEDULE REQUIREMENTS.

MASONRY REINFORCING MINIMUM LAP SPLICES

BAR SIZE	BASIC LAP SPLICE Ld FOR CMU REINFORCING (mm)
#10	450
#13	600
#16	750
#19	900
#22	1050
#25	1200

TYPICAL CMU WALL REINFORCING SCHEDULE

WALL TYPE OR LOCATION	WALL THICKNESS (mm)	CONT VERT REINF (CENTERED IN CMU, UON)	INTERMEDIATE CMU LINTEL (CIP BB)			REMARKS
			DEPTH (mm)	REINF (BOTT UON)	MAX BOND BEAM VERT SPACING (mm)	
ALL PERIMETER/EXTERIOR WALLS (UON)	200	1-#16 @ 600	200	2-#16	1200	-----
LOAD BEARING INTERIOR WALLS WITH TOP AND BOTT SUPPORTS	200	1-#13 @ 800	200	2-#16	1200	-----
NON-LOAD BEARING INTERIOR WALLS WITH TOP AND BOTT SUPPORTS	300	1-#16 @ 800	200	2-#16	1200	-----
KITCHEN ANNEX	200	1-#16 @ 800	200	2-#16	800	-----

NOTES:
1. REINFORCING SIZES AND SPACING GIVEN IN SECTIONS AND DETAILS SHALL SUPERSEDE THE ABOVE SCHEDULE REQUIREMENTS.
2. PROVIDE CONTINUOUS CAST IN PLACE CONCRETE BOND BEAM AT ALL WALL LATERAL SUPPORT LOCATIONS.
3. REINFORCING INDICATED SHALL BE CONTINUOUS FOR FULL EXTENT OF SPLICE FOLLOWING THE REQUIREMENTS OF THE LAP SPLICE TABLE SHOWN ON THIS SHEET.
4. WALLS HAVE BEEN DESIGNATED AS VERTICALLY SPANNING UON AND THEREFORE MUST BE TEMPORARILY SUPPORTED DURING CONSTRUCTION UNTIL THE SUPPORTING DIAPHRAGMS (FLOOR AND ROOF SYSTEMS) HAVE BEEN COMPLETELY INSTALLED. SHORING IS THE RESPONSIBILITY OF THE CONTRACTOR.
5. ALL CMU WALLS SHALL BE FULLY GROUTED IN LIFTS NOT EXCEEDING THOSE BY CODE (UON)
6. SEE TYPICAL CMU WALL DETAILS ON SHEET S12.

US Army Corps of Engineers
Afghanistan Engineer District

SYMBOL	DESCRIPTION	DATE	APR

DESIGNED BY: BAKER
DWN BY: RCG
CHK BY: CWW
DATE: 09-30-09
SUBMITTED BY: BAKER
FILE NO.: ANPSDS-004XXX

Michael Baker Jr., Inc
A unit of Michael Baker Corporation
Airside Business Park
100 Airside Drive
Moon Township, PA 15108
www.mbakercorp.com

AFGHAN NATIONAL POLICE
STANDARD DESIGN
DINING FACILITIES BUILDING (559 GSM)
WOOD FIRED HEAT OPTION

GENERAL NOTES

SHEET REFERENCE NUMBER:
S4

100% SUBMISSION

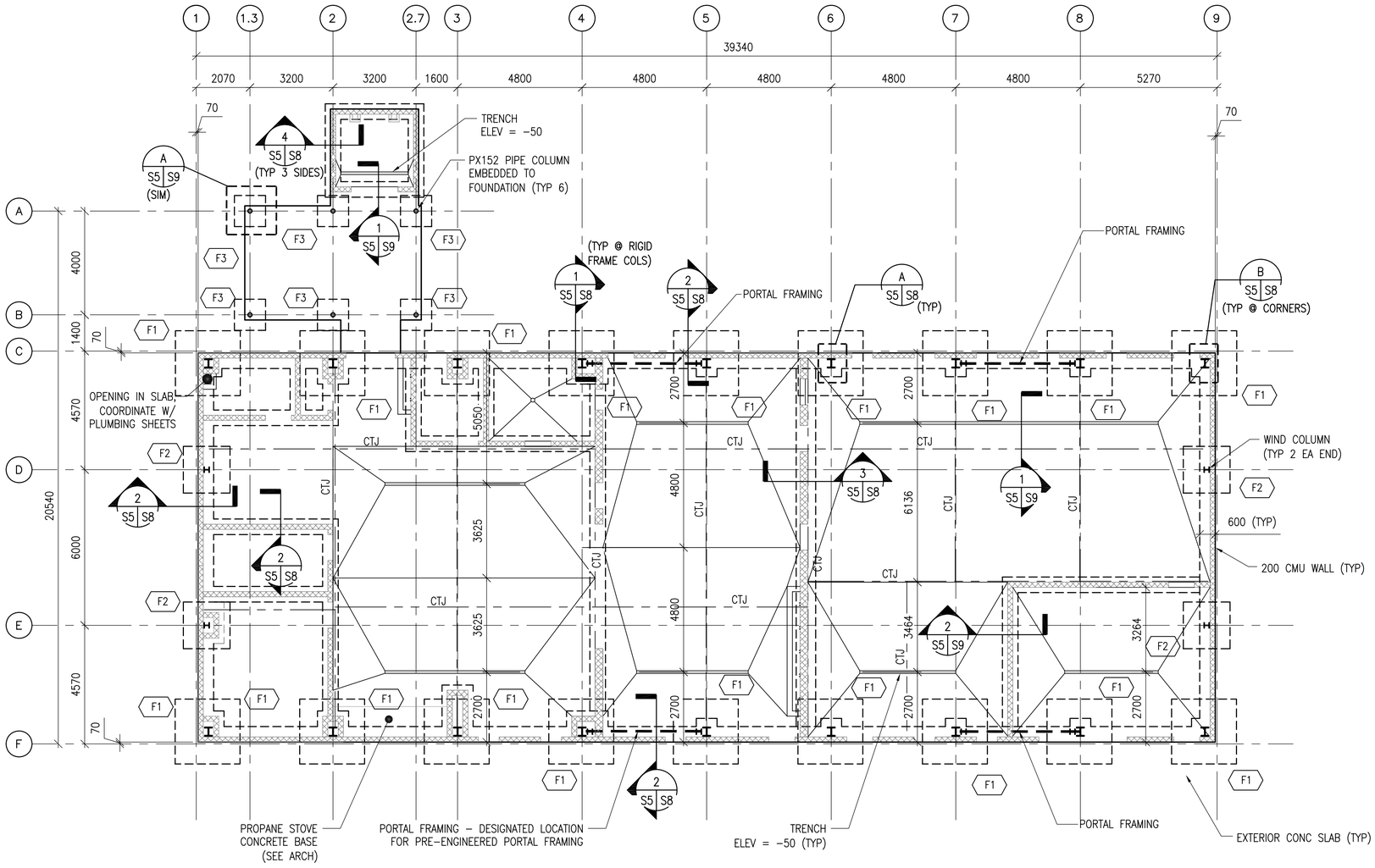

FOUNDATION PLAN

SCALE: 1:100

NOTES:

1. FINISH FIRST FLOOR ELEVATION SHALL BE (DATUM 0.0) ALL PLUS OR MINUS DIMENSIONS INDICATED ON PLAN OR REFERRED TO IN NOTES RELATE TO FINISH FIRST FLOOR ELEVATION.
2. TOP OF EXTERIOR FOOTINGS SHALL BE -500 UNLESS OTHERWISE INDICATED.
3. TOP OF INTERIOR FOOTING SHALL BE -400 UNLESS OTHERWISE INDICATED.
4. UNLESS OTHERWISE INDICATED, FLOORS SHALL BE 150 THICK CONCRETE SLAB-ON-GRADE W/ #13 REBAR @ 450 OC EW (38 CLR TOP) OVER 100 COMPACTED CAPILLARY WATER BARRIER (#57 STONE)
5. SPREAD FOOTINGS INDICATED THUS (XXXX) ON PLAN. REFER TO SPREAD FOOTING SCHEDULE ON SHEET S3.
6. REFER TO SHEETS S1 TO S4 FOR STRUCTURAL NOTES, BASIS OF DESIGN, SYMBOLS AND ABBREVIATIONS.
7. CTJ & CJ INDICATES SLAB CONTROL OR CONSTRUCTION JOINTS. RESPECTIVELY, REFER TO SHEET S12 FOR SECTIONS & DETAILS.
8. REFER TO ARCHITECTURAL SHEETS FOR MASONRY PARTITION TYPES.
9. ALL CMU TO BE FULLY GROUTED UNLESS OTHERWISE NOTED. SEE CMU WALL REINFORCING SCHEDULE ON SHEET S4.
10. SEE MECHANICAL AND ELECTRICAL SHEETS FOR CONCRETE PAD LOCATIONS, SIZES, AND THICKNESS NOT SHOWN. SEE SHEET S12 FOR DETAILS.
11. ——→ INDICATES SLOPE IN SLAB ON GRADE. COORDINATE LOCATION AND ELEVATION WITH ARCHITECTURAL AND PLUMBING SHEETS. (TYP)
12. PRIOR TO CONSTRUCTION OF FOUNDATIONS, THE CONTRACTOR SHALL COORDINATE THE LOCATIONS OF ALL FOOTINGS, PIERS, AND TURN DOWN SLAB EDGES WITH THE PRE-ENGINEERED BUILDING DRAWINGS AND REVISE AS NECESSARY.
13. PRE-ENGINEERED COLUMN BASES SHALL BE DESIGNED AS PINNED ONLY.
14. LOCATIONS OF PORTAL FRAMES HAVE BEEN SHOWN IN PLAN AND SHALL NOT BE MODIFIED UNLESS APPROVED BY THE CONTRACTING OFFICER.
15. ALL PIERS FOR PRE-ENGINEERED BUILDING COLUMNS SHALL HAVE HAIR-PIN TIES AS INDICATED IN THE DETAILS.
16. ANCHOR BOLTS FOR PRE-ENGINEERED BUILDING COLUMNS SHALL BE MINIMUM OF (4)-20 DIA A36M ANCHOR BOLTS WITH 300 EMBED MIN.
17. TOP OF PIER ELEVATION SET AT -150. COORDINATE BOTTOM/BASE PLATE AND GROUT REQUIREMENTS WITH PRE-ENGINEERED BUILDING MANUFACTURER.

UNLESS OTHERWISE NOTED, LINEAR DIMENSIONS SHOWN ARE IN MILLIMETERS (MM)

0 2000 4000 8000

SCALE: 1: 100

US Army Corps of Engineers

Afghanistan Engineer District

SYMBOL	DESCRIPTION	DATE	APR

DESIGNED BY: WJJ
DWN BY: RCG
CHK BY: CWW
DATE: 09-30-09
SUBMITTED BY: BAKER
FILE NO.: ANPSDS-105XXX

Michael Baker Jr., Inc.
A unit of Michael Baker Corporation
Airside Business Park
100 Airside Drive
Moon Township, PA 15108
www.mbakercorp.com

AFGHAN NATIONAL POLICE
STANDARD DESIGN
DINING FACILITIES BUILDING (559 GSM)
WOOD FIRED HEAT OPTION

FOUNDATION PLAN

SHEET REFERENCE NUMBER:

S5

100% SUBMISSION

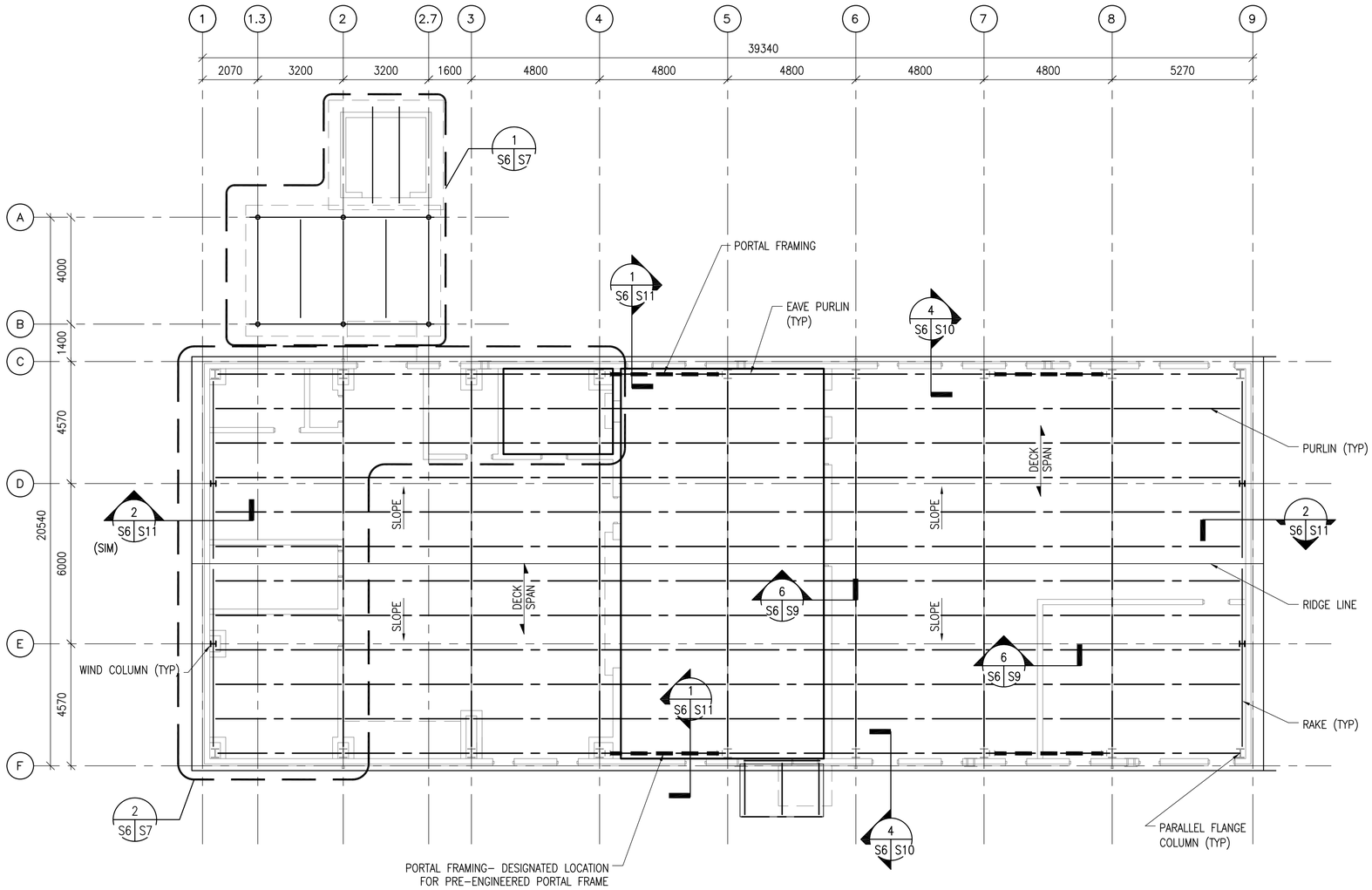

ROOF FRAMING PLAN

SCALE: 1:100

NOTES:

1. REFER TO SHEETS S1 TO S4 FOR STRUCTURAL NOTES, BASIS OF DESIGN SYMBOLS AND ABBREVIATIONS.
2. PRE-ENGINEERED BUILDING MANUFACTURER SHALL COORDINATE ALL LOADING REQUIREMENTS INDICATED ON THE SHEETS AND SPECIFICATIONS WITH OTHER TRADES.
3. PRE-ENGINEERED BUILDING COLUMN BASES SHALL BE DESIGNED AS PINNED ONLY.
4. LOCATIONS OF PORTAL FRAMES HAVE BEEN SHOWN IN PLAN AND SHALL NOT BE MODIFIED UNLESS APPROVED BY THE CONTRACTING OFFICER.
5. PRE-ENGINEERED BUILDING MANUFACTURER SHALL COORDINATE ALL HANGING LOADING FROM EQUIPMENT OR ARCHITECTURAL ELEMENTS AND INCLUDE IN THE DESIGN OF THE FRAMING.
6. SEE SPECIFICATION FOR LATERAL DRIFT REQUIREMENTS.
7. BUILDING DOES NOT NEED PROVISIONS FOR FUTURE EXPANSION AT END WALLS.
8. PRE-ENGINEERED BUILDING MANUFACTURER IS RESPONSIBLE TO DESIGN ALL JAMB AND HEAD CONDITION SUPPORT SUB-FRAMING AS REQUIRED FOR THE LOADING INDICATED AND THE REQUIREMENTS OF THE ATTACHED COMPONENTS.
9. SEE CMU WALL REINFORCING SCHEDULE ON SHEET S4.
10. ROOF DECK OVER KITCHEN ANNEX BUILDING SHALL BE 38mm, 18 GAUGE, TYPE B WIDE RIB METAL DECK.

UNLESS OTHERWISE NOTED, LINEAR DIMENSIONS SHOWN ARE IN MILLIMETERS (MM)

0 2000 4000 8000

SCALE: 1: 100

US Army Corps of Engineers

Afghanistan Engineer District

SYMBOL	DESCRIPTION	DATE	APR

DESIGNED BY: WJJ	DATE: 09-30-09		
DWN BY: RCG	SUBMITTED BY: BAKER		
CHK BY: CWW	FILE NO.: ANPS96-106XXX		

Michael Baker Jr., Inc
A unit of Michael Baker Corporation
Airside Business Park
100 Airside Drive
Moon Township, PA 15108
www.mbakercorp.com

AFGHAN NATIONAL POLICE
STANDARD DESIGN
DINING FACILITIES BUILDING (559 GSM)
WOOD FIRED HEAT OPTION

ROOF FRAMING PLAN

SHEET REFERENCE NUMBER:

S6

100% SUBMISSION

NOTES:
1. REFER TO SHEETS S1 TO S4 FOR STRUCTURAL NOTES, BASIS OF DESIGN SYMBOLS AND ABBREVIATIONS.
2. SEE SPECIFICATION FOR LATERAL DRIFT REQUIREMENTS.
3. ROOF DECK OVER KITCHEN ANNEX BUILDING SHALL BE 38mm, 18 GAUGE, TYPE B WIDE RIB METAL DECK.
4. SEE CMU WALL REINFORCING SCHEDULE ON SHEET S4.

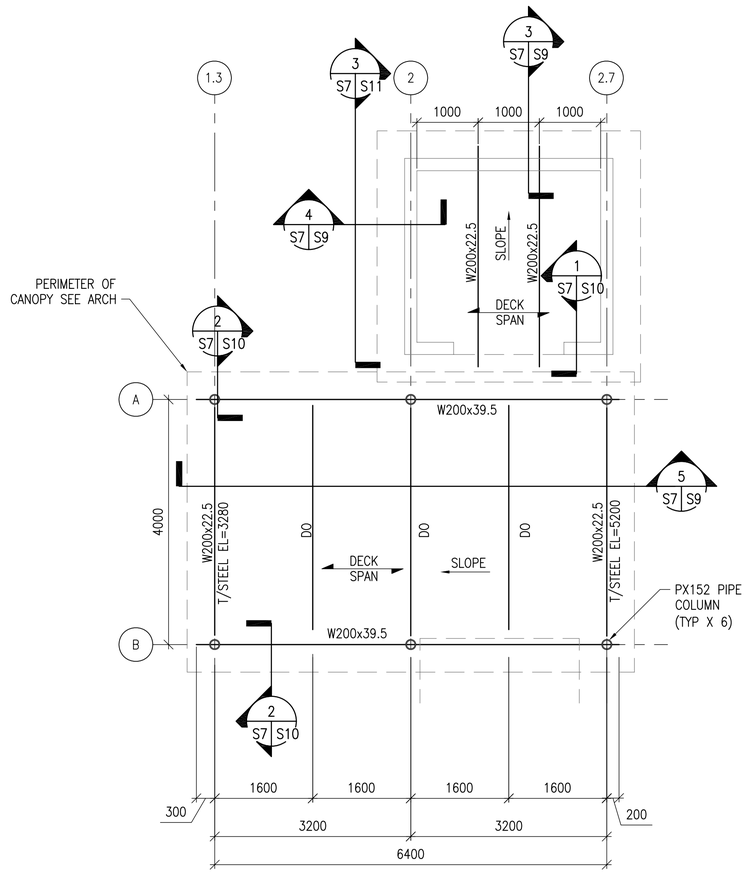

1 S6 S7 ENLARGED KITCHEN ANNEX AND WOOD STORAGE ROOF FRAMING PLAN
SCALE: 1:50

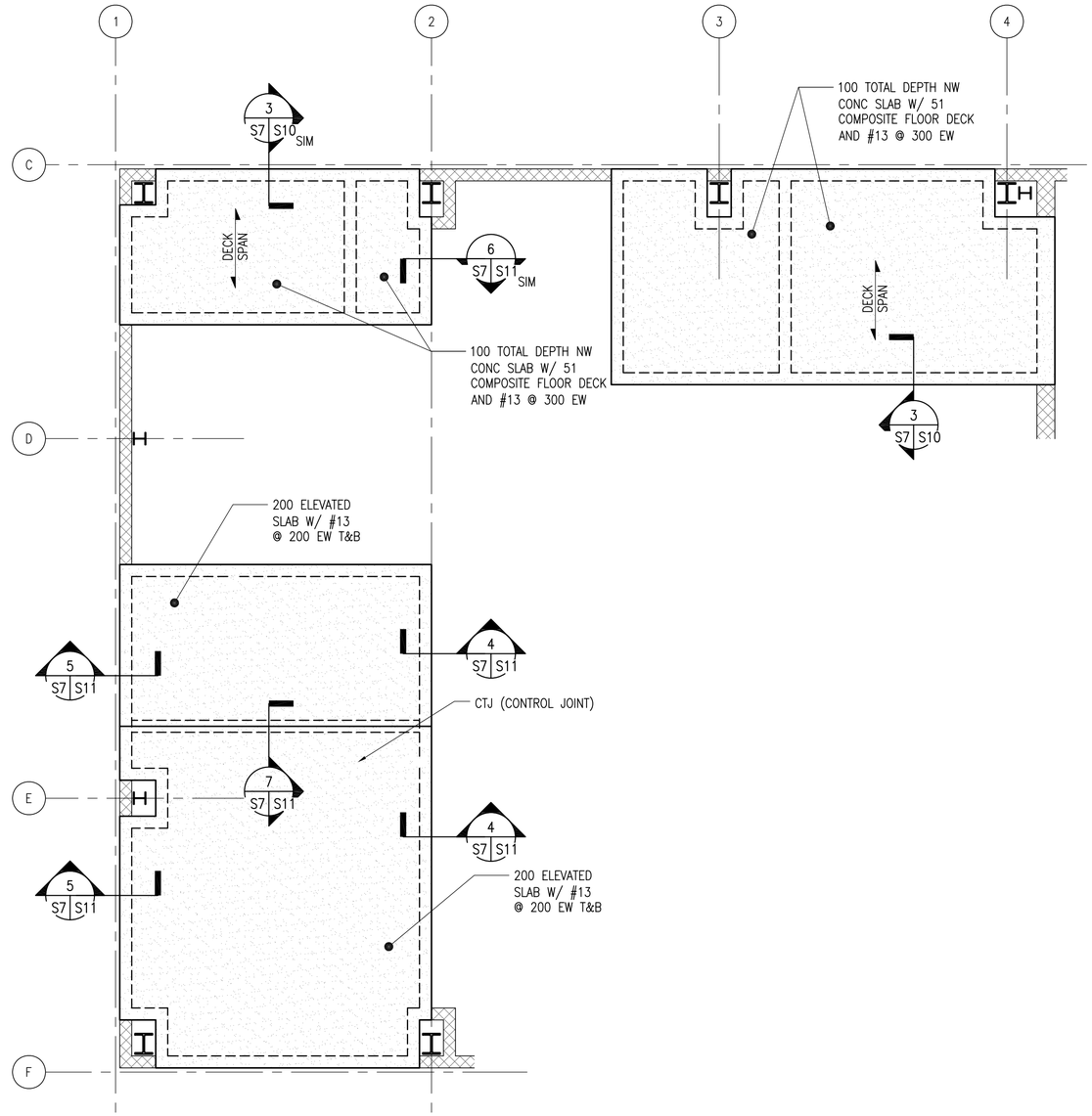

2 S6 S7 ENLARGED ELEVATED SLAB STORAGE AREA FRAMING PLAN
SCALE: 1:50

UNLESS OTHERWISE NOTED, LINEAR DIMENSIONS SHOWN ARE IN MILLIMETERS (MM)
0 1000 2000 4000
SCALE: 1: 50

US Army Corps of Engineers
Afghanistan Engineer District

SYMBOL	DESCRIPTION	DATE	APR

DESIGNED BY: WJ
DWN BY: RCG
CHK BY: CWW
DATE: 09-30-09
SUBMITTED BY: BAKER
FILE NO.: ANPSDS-107XXX

Michael Baker Jr., Inc
A unit of Michael Baker Corporation
Airside Business Park
100 Airside Drive
Moon Township, PA 15108
www.mbakercorp.com

AFGHAN NATIONAL POLICE
STANDARD DESIGN
DINING FACILITIES BUILDING (559 GSM)
WOOD FIRED HEAT OPTION
ENLARGED KITCHEN ANNEX AND WOOD STORAGE ROOF FRAMING PLAN

SHEET REFERENCE NUMBER:
S7

100% SUBMISSION

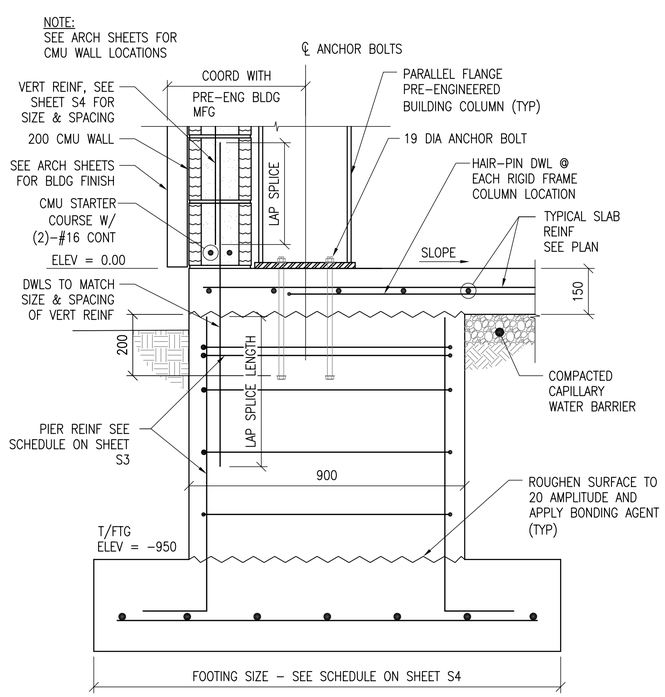

1 S5 S8 SECTION
SCALE: 1:10

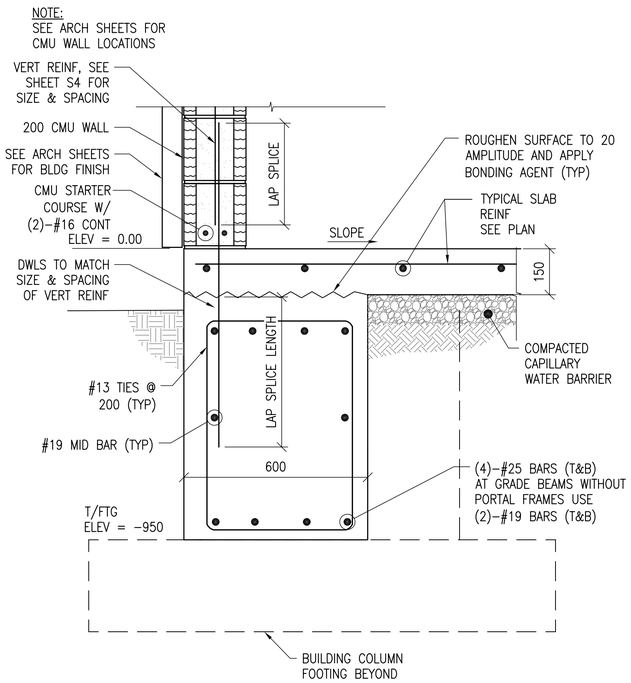

2 S5 S8 SECTION
SCALE: 1:10

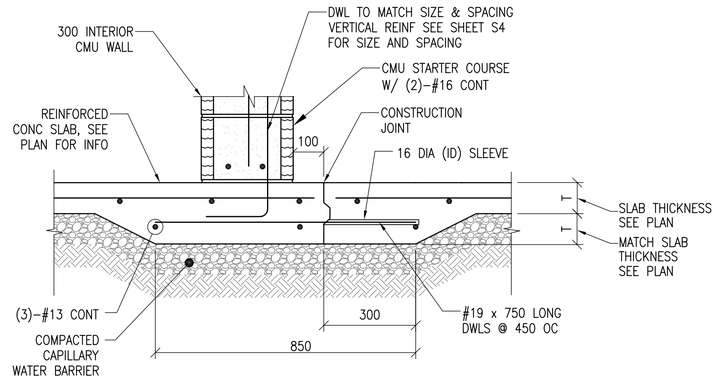

3 S5 S8 CONTROL JOINT
DETAIL AT CMU WALL
SCALE: 1:10

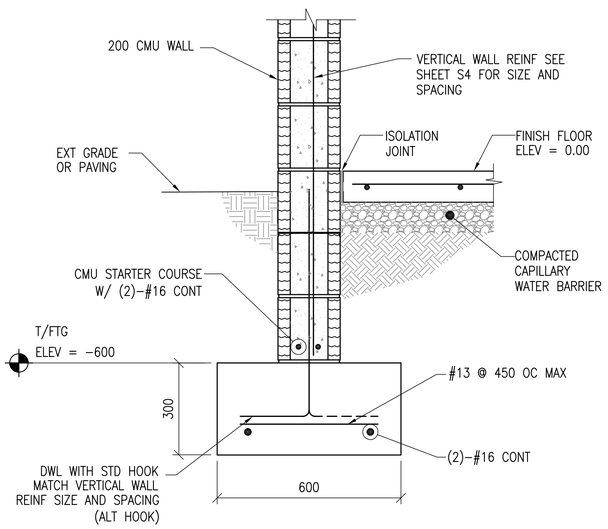

4 S5 S8 SECTION
SCALE: 1:10

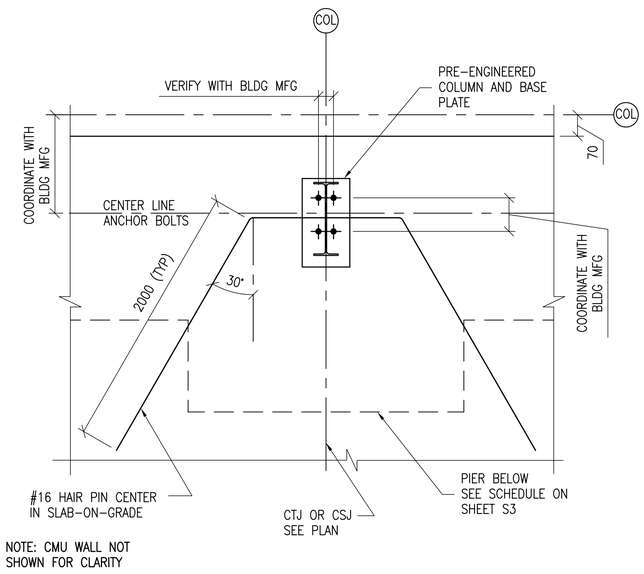

A S5 S8 COLUMN DETAIL
SCALE: 1:10

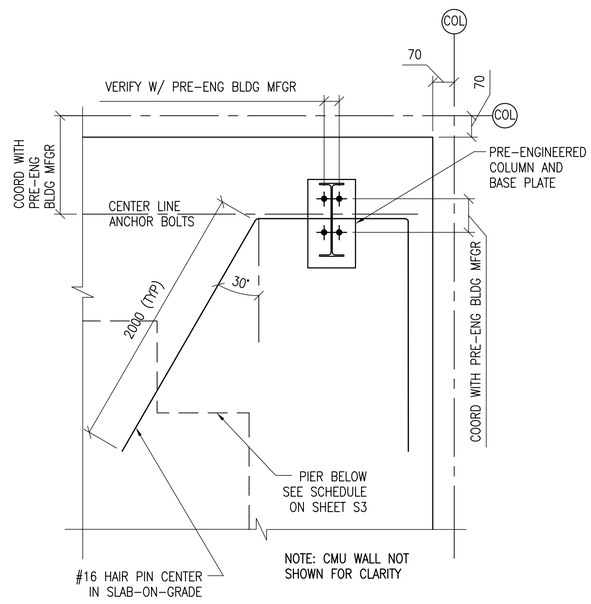

B S5 S8 COLUMN DETAIL
SCALE: 1:10

UNLESS OTHERWISE NOTED, LINEAR DIMENSIONS SHOWN ARE IN MILLIMETERS (MM)

0 200 400 800
SCALE: 1: 10

US Army Corps of Engineers
Afghanistan Engineer District

SYMBOL	DESCRIPTION	DATE	APR

DESIGNED BY: WJJ
DWN BY: RCG
CHK BY: CWW
DATE: 09-30-09
SUBMITTED BY: BAKER
FILE NO.: ANPSDS-308XXX

Michael Baker Jr., Inc
A unit of Michael Baker Corporation
Airside Business Park
100 Airside Drive
Moon Township, PA 15108
www.mbakercorp.com

AFGHAN NATIONAL POLICE
STANDARD DESIGN
DINING FACILITIES BUILDING (559 GSM)
WOOD FIRED HEAT OPTION

SECTIONS & DETAILS

SHEET REFERENCE NUMBER:
S8

100% SUBMISSION

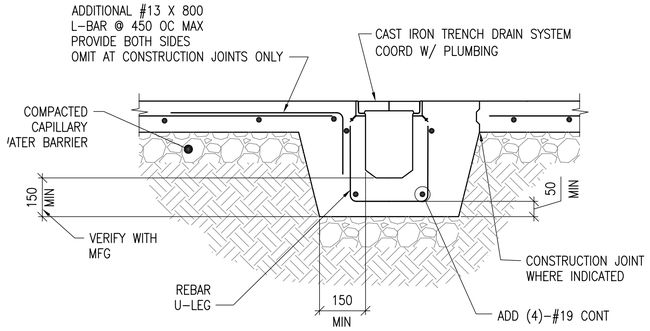

1 S5 S9 SECTION
SCALE: 1:10

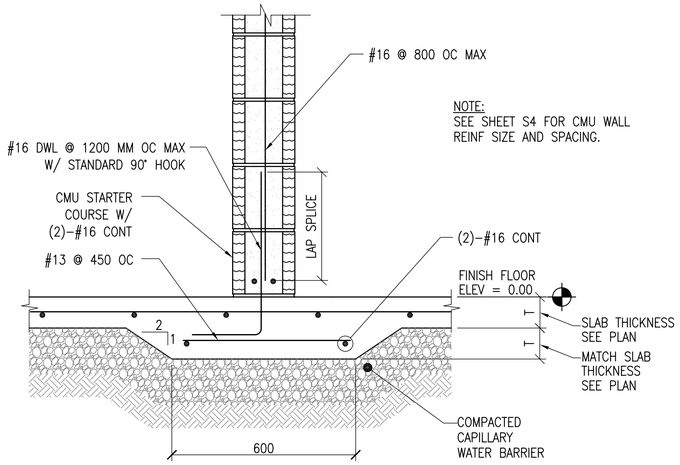

2 S5 S9 SECTION
SCALE: 1:10

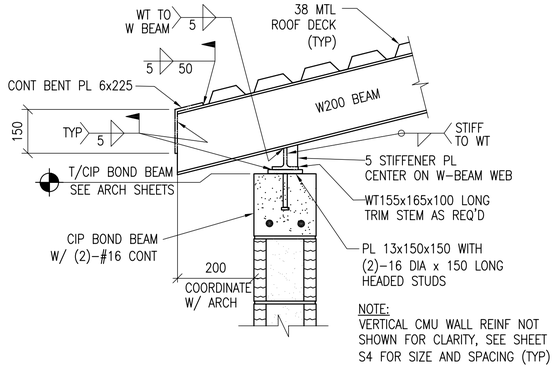

3 S7 S9 SECTION
SCALE: 1:10

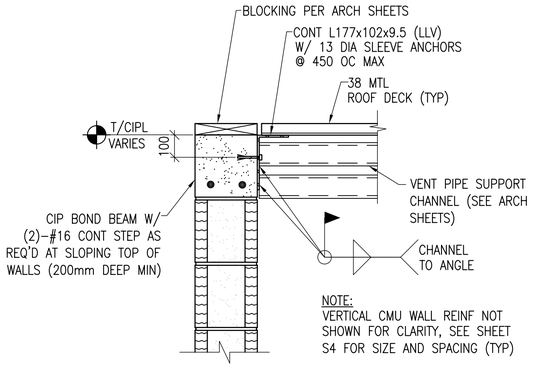

4 S7 S9 SECTION
SCALE: 1:10

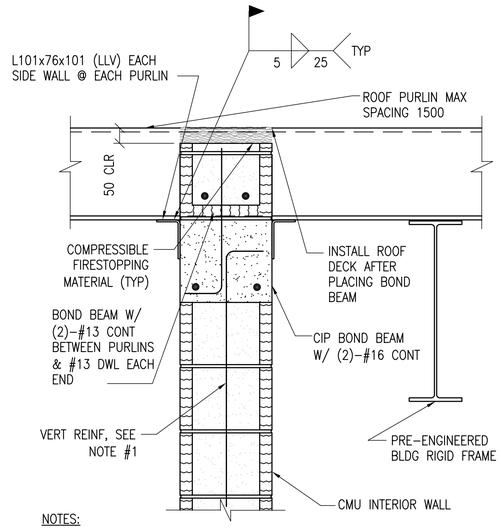

NOTES:

1. SEE SHEET S4 FOR REINF SIZE AND SPACING
2. REQUIRED AT INTERIOR CMU WALL LENGTHS THAT EXCEED 3600 BETWEEN OPPOSING CMU WALLS THAT ARE TIED.

6 S6 S9 SECTION
SCALE: 1:10

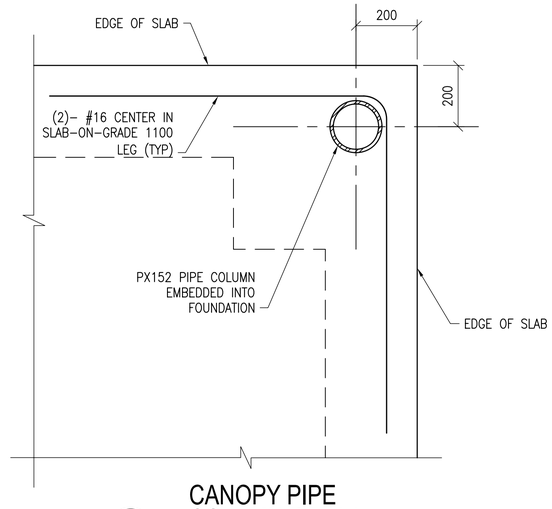

A S5 S9 CANOPY PIPE COLUMN DETAIL
SCALE: 1:10

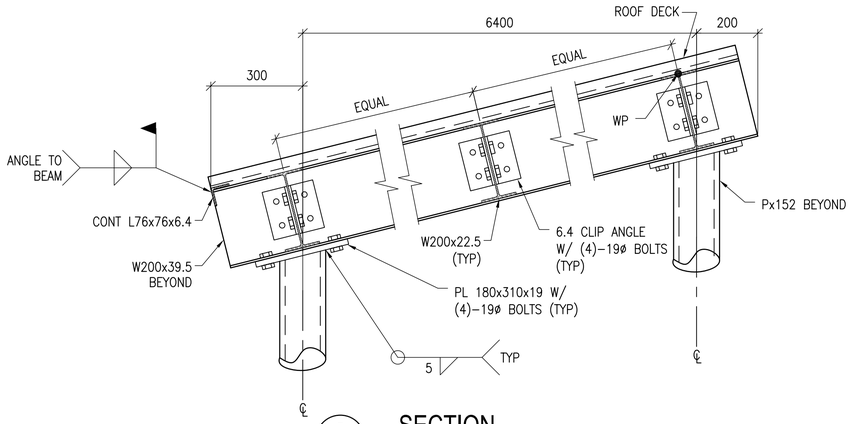

5 S7 S9 SECTION
SCALE: 1:10

UNLESS OTHERWISE NOTED, LINEAR DIMENSIONS SHOWN ARE IN MILLIMETERS (MM)

0 200 400 800
SCALE: 1: 10

US Army Corps of Engineers
Afghanistan Engineer District

SYMBOL	DESCRIPTION	DATE	APR

DESIGNED BY: WJJ
DATE: 09-30-09
DWN BY: RCG
SUBMITTED BY: BAKER
CHK BY: CWW
FILE NO.: ANPSDS-309XXX

Michael Baker Jr., Inc.
A unit of Michael Baker Corporation
Airside Business Park
100 Airside Drive
Moon Township, PA 15108
www.mbakercorp.com

AFGHAN NATIONAL POLICE
STANDARD DESIGN
DINING FACILITIES BUILDING (559 GSM)
WOOD FIRED HEAT OPTION

SECTIONS & DETAILS

SHEET REFERENCE NUMBER:
S9

100% SUBMISSION

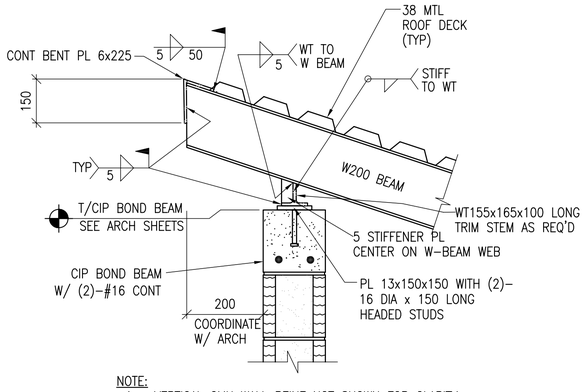

NOTE:
1. VERTICAL CMU WALL REINF NOT SHOWN FOR CLARITY, SEE SHEE S4 FOR SIZE AND SPACING (TYP)

1 S7 S10 **SECTION**
SCALE: 1:10

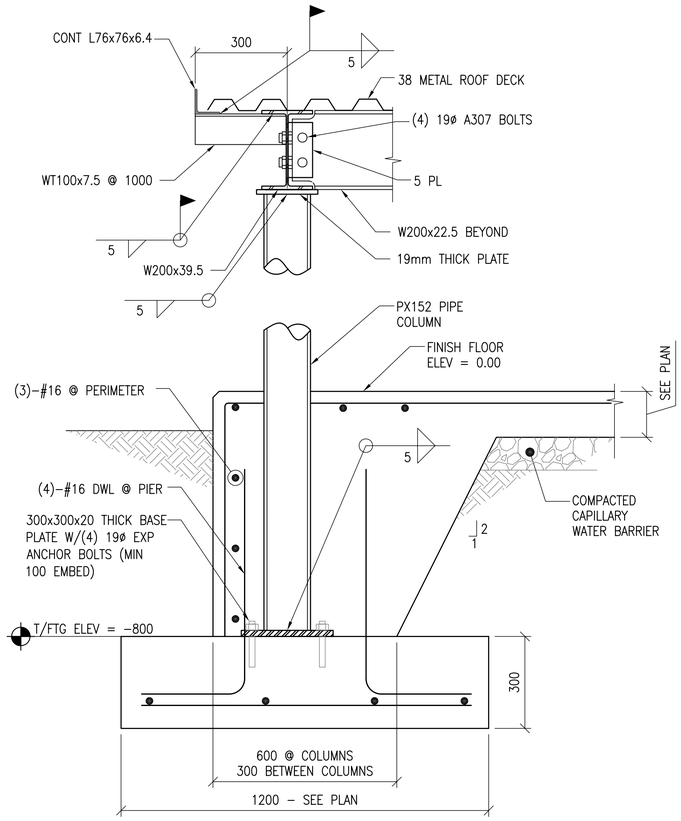

2 S7 S10 **SECTION**
SCALE: 1:10

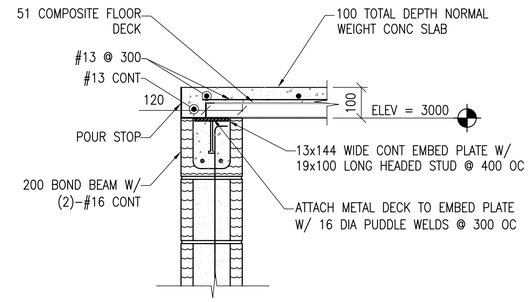

3 S7 S10 **DETAIL**
SCALE: 1:10

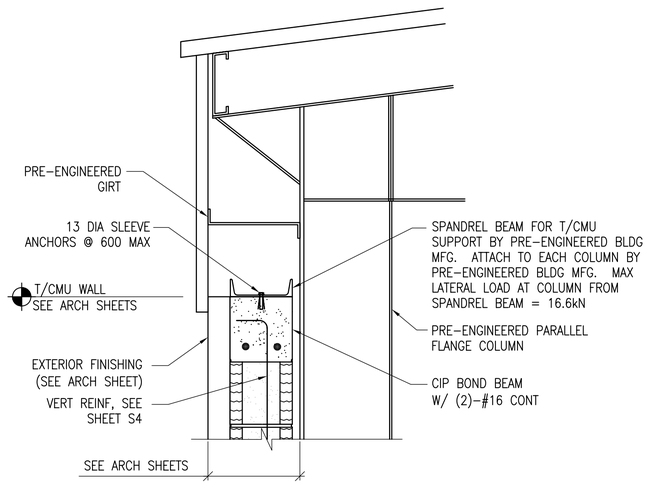

NOTE:
VERTICAL CMU WALL REINF NOT SHOWN FOR CLARITY, SEE SHEET S4 FOR SIZE AND SPACING (TYP)

4 S6 S10 **SECTION**
SCALE: 1:10

UNLESS OTHERWISE NOTED, LINEAR DIMENSIONS SHOWN ARE IN MILLIMETERS (MM)

0 200 400 800
SCALE: 1: 10

US Army Corps of Engineers
Afghanistan Engineer District

SYMBOL	DESCRIPTION	DATE	APR

DESIGNED BY: WJJ
DATE: 09-30-09
DWN BY: RCG
SUBMITTED BY: BAKER
CHK BY: CWW
FILE NO.: ANPSDS-310XXX

Michael Baker Jr., Inc
A unit of Michael Baker Corporation
Airside Business Park
100 Airside Drive
Moon Township, PA 15108
www.mbakercorp.com

AFGHAN NATIONAL POLICE
STANDARD DESIGN
DINING FACILITIES BUILDING (559 GSM)
WOOD FIRED HEAT OPTION

SECTIONS & DETAILS

SHEET REFERENCE NUMBER:
S10

100% SUBMISSION

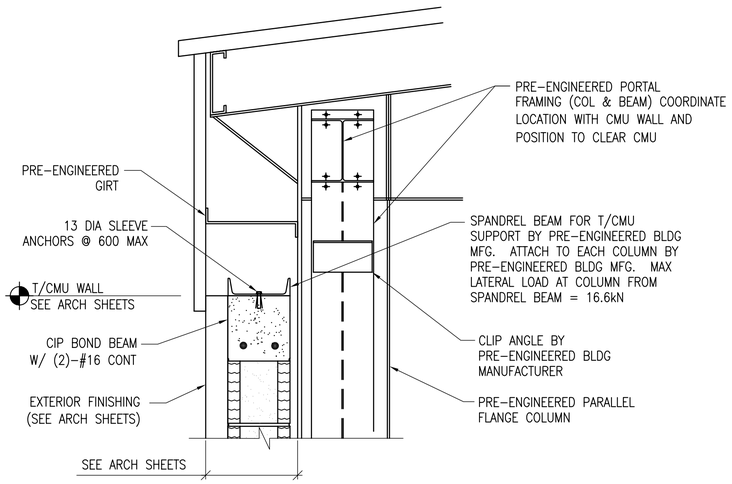

NOTE:
VERTICAL CMU WALL REINF NOT SHOWN FOR CLARITY, SEE SHEET S4 FOR SIZE AND SPACING (TYP)

1 S6 S11 SECTION
SCALE: 1:10

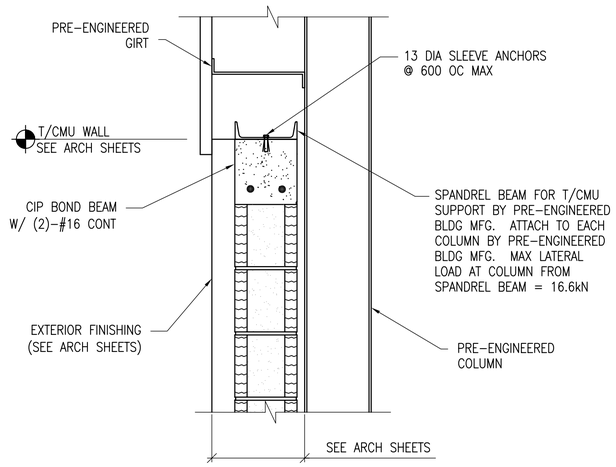

NOTE:
VERTICAL CMU WALL REINF NOT SHOWN FOR CLARITY, SEE SHEET S4 FOR SIZE AND SPACING (TYP)

2 S6 S11 SECTION
SCALE: 1:10

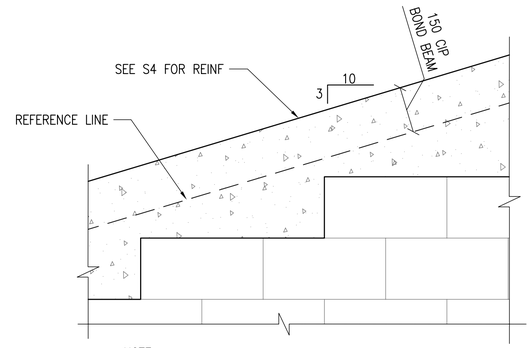

NOTE:
1. STEP BOND BEAM @ INTERIOR/EXTERIOR CMU WALLS

3 S7 S11 SECTION
SCALE: 1:10

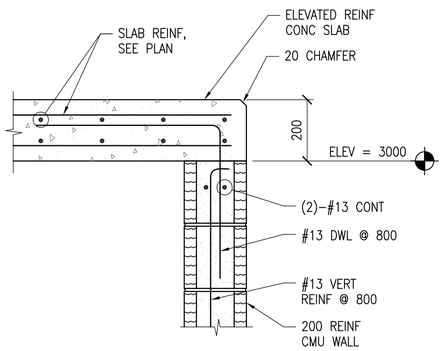

4 S7 S11 SECTION
SCALE: 1:10

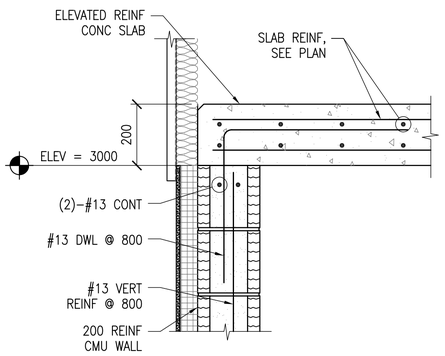

5 S7 S11 SECTION
SCALE: 1:10

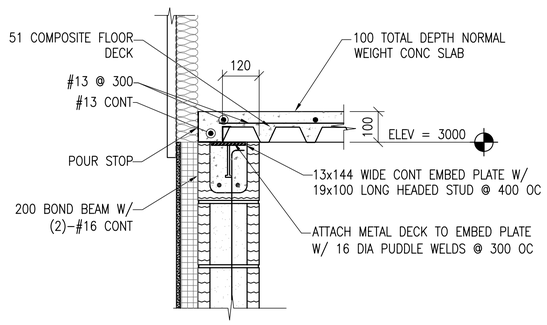

6 S7 S11 SECTION
SCALE: 1:10

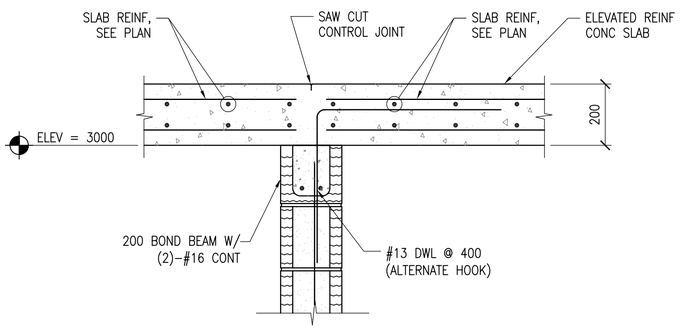

7 S7 S11 SECTION
SCALE: 1:10

UNLESS OTHERWISE NOTED, LINEAR DIMENSIONS SHOWN ARE IN MILLIMETERS (MM)

0 200 400 800
SCALE: 1: 10

US Army Corps of Engineers
Afghanistan Engineer District

SYMBOL	DESCRIPTION	DATE	APR

DESIGNED BY: WJJ
DATE: 09-30-09
DWN BY: RCG
SUBMITTED BY: BAKER
CHK BY: CWW
FILE NO.: ANPSDS-311XXX

Michael Baker Jr, Inc
A unit of Michael Baker Corporation
Airside Business Park
100 Airside Drive
Moon Township, PA 15108
www.mbakercorp.com

AFGHAN NATIONAL POLICE
STANDARD DESIGN
DINING FACILITIES BUILDING (559 GSM)
WOOD FIRED HEAT OPTION

SECTIONS & DETAILS

SHEET REFERENCE NUMBER:
S11

100% SUBMISSION

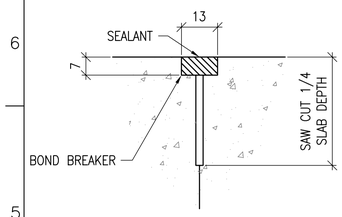

CONTROL JOINT DETAIL

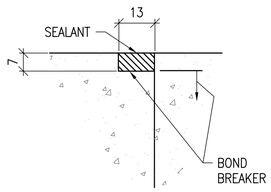

CONSTRUCTION JOINT DETAIL

TYPICAL CONCRETE SLAB JOINT FINISH DETAIL

1 / S12 SCALE: NTS

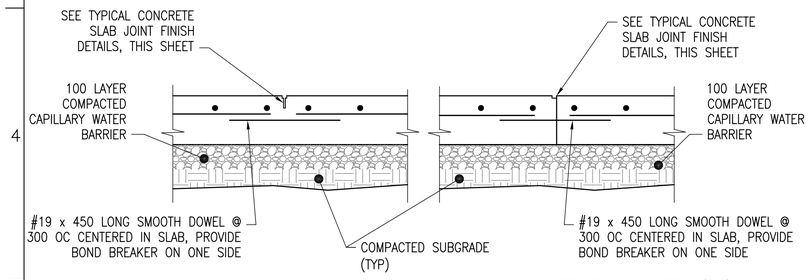

CONTROL JOINT DETAIL (CTJ)

CONSTRUCTION JOINT DETAIL (CSJ)

TYPICAL SLAB ON GRADE JOINT DETAILS

2 / S12 SCALE: NTS

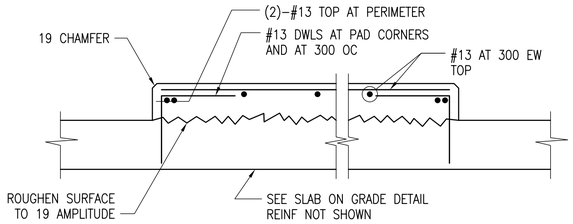

INTERIOR EQUIPMENT PAD DETAIL

3 / S12 SCALE: NTS

DETAIL NOTE:
1. COORDINATE EQUIPMENT PAD SIZE AND LOCATIONS W/ ELECTRICAL/MECHANICAL SHEETS AND EQUIPMENT MANUFACTURER.

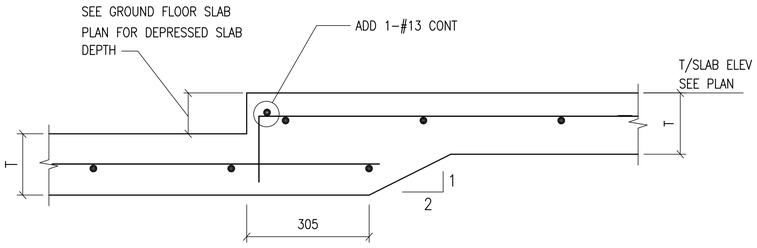

T = SLAB DEPTH, SEE GROUND FLOOR SLAB PLAN FOR T

SLAB DEPRESSION SECTION

4 / S12 SCALE: 1:10

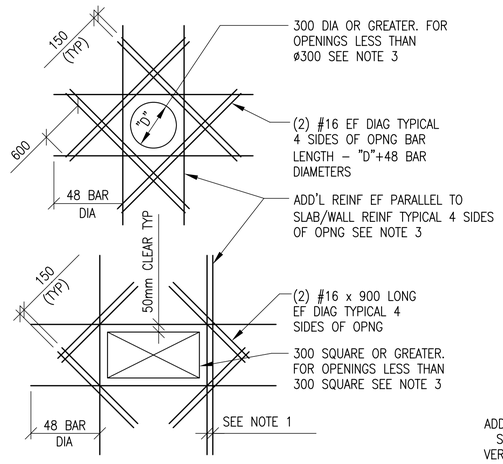

SLAB OPENINGS

DETAIL NOTES:
1. WHERE MORE THAN ONE ADDITIONAL BAR IS REQUIRED PARALLEL TO THE EXISTING SLAB/WALL REINFORCING THE ADDITIONAL REINFORCING BARS SHALL BE SPACED AT 100 ON CENTER.
2. ADDITIONAL REINFORCING PARALLEL TO THE SLAB/WALL REINFORCING SHALL BE #16 BARS THAT PROVIDE A STEEL AREA ON EACH SIDE OF THE OPENING EQUAL TO 1/2 THE AREA OF THE REINFORCING CUT BY THE OPENING.
3. FOR OPENINGS WITH SIDES OR DIAMETERS LESS THAN 300 SPREAD THE SLAB/WALL REINFORCING TO CLEAR THE OPENING.

ADD'L REINFORCEMENT DETAILS

5 / S12 SCALE: NTS

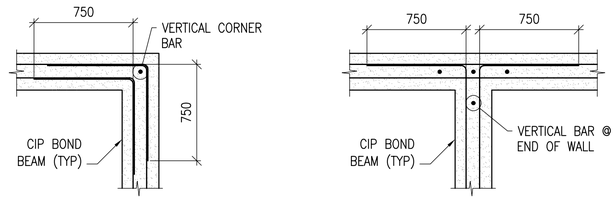

BOND BEAM CORNER

BOND BEAM INTERSECTION

CIP BOND BEAM DETAILS

6 / S12 SCALE: NTS

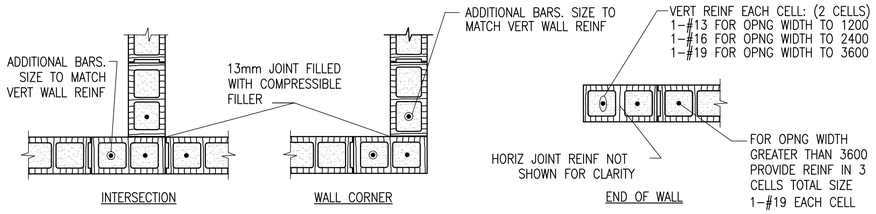

INTERSECTION

WALL CORNER

END OF WALL

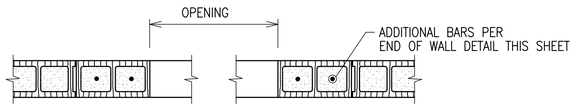

MASONRY OPENING W/ LINTEL

NOTES:
1. OPENING WIDTH SHALL NOT EXCEED 3600 FOR THIS TYPE OF JAMB
2. ALL CMU CELLS FULLY GROUTED

TYPICAL CMU DETAILS

7 / S12 SCALE: NTS

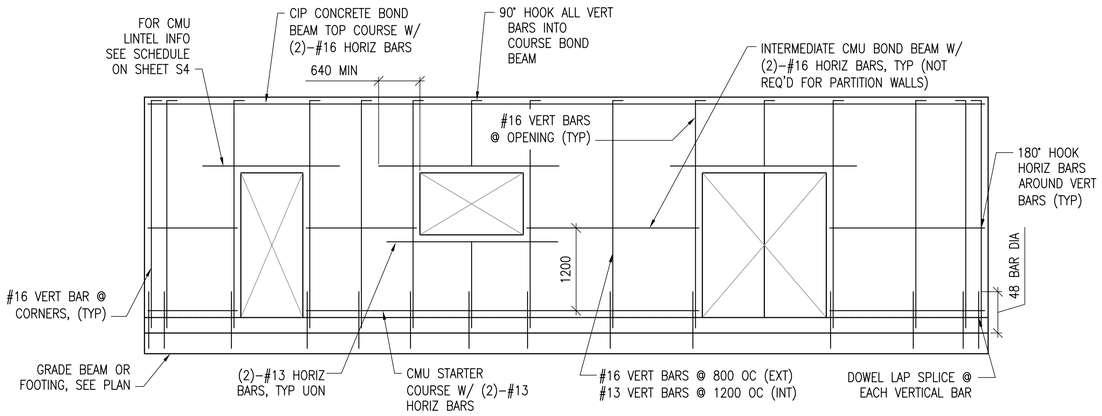

MIN CMU WALL REINFORCING

8 / S12 SCALE: NTS

LINTEL NOTES:
CMU LINTEL REINFORCEMENT AS PER SCHEDULE ON SHEET S4

UNLESS OTHERWISE NOTED, LINEAR DIMENSIONS SHOWN ARE IN MILLIMETERS (MM)

0 200 400 800

SCALE: 1: 10

US Army Corps of Engineers
Afghanistan Engineer District

SYMBOL	DESCRIPTION	DATE	APR

DESIGNED BY: WJJ
DWN BY: RCG
CHK BY: CWW
DATE: 09–30–09
SUBMITTED BY: BAKER
FILE NO.: ANPSDS–512XXX

Michael Baker Jr., Inc
A unit of Michael Baker Corporation
Airside Business Park
100 Airside Drive
Moon Township, PA 15108
www.mbakercorp.com

AFGHAN NATIONAL POLICE
STANDARD DESIGN
DINING FACILITIES BUILDING (559 GSM)
WOOD FIRED HEAT OPTION

TYPICAL DETAILS

SHEET REFERENCE NUMBER:
S12

100% SUBMISSION

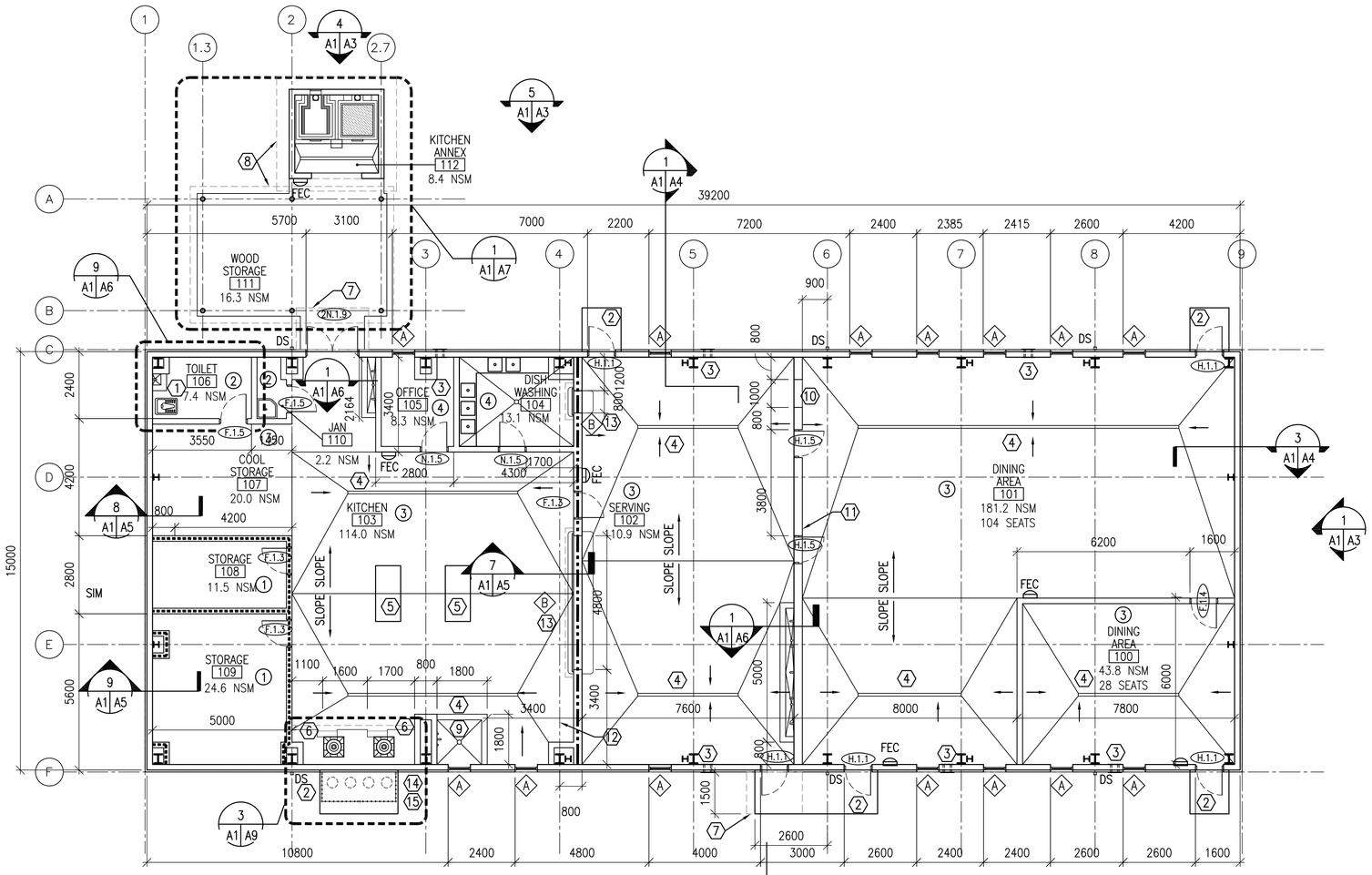

FLOOR PLAN

SCALE: 1:100
559.0 GSM

GENERAL NOTES:

A. INTERIOR PARTITIONS ARE 3000 MM HIGH, UNLESS OTHERWISE NOTED. INTERIOR PARTITIONS SHALL BE 200 MM CMU UNLESS OTHERWISE NOTED.
B. OPENINGS FOR DOORS SHALL BE LOCATED A MINIMUM OF 200 MM FROM THE ADJACENT WALL.
C. SURFACES TO BE PAINTED SHALL BE CLEAN AND FREE OF FOREIGN MATTER BEFORE APPLICATION OF PAINT. CLEANING SHALL BE SCHEDULED SO THAT DUST AND OTHER CONTAMINANTS WILL NOT FALL ON WET, NEWLY PAINTED SURFACES.
D. CONCRETE AND INTERIOR MASONRY SURFACES GROUTED SOLID SHALL BE ALLOWED TO DRY AT LEAST 30 DAYS BEFORE PAINTING EXCEPT CONCRETE SLAB ON GRADE WHICH SHALL BE ALLOWED TO CURE 90 DAYS BEFORE PAINTING.
E. PAINTS CONTAINING LEAD IN EXCESS OF 0.06 PERCENT BY WEIGHT OF THE TOTAL NONVOLATILE CONTENT SHALL NOT BE USED.
F. MERCURIAL FUNGICIDES SHALL NOT BE USED IN OIL–BASE PAINT.
G. REMOVE LOOSE DIRT AND CLEAN SURFACES BEFORE PAINTING. APPLY PAINT TO INTERIOR STRUCTURAL RIGID FRAMINGS AND CEILINGS AND TEST FOR ADHESION. PRIMER COAT FOR MASONRY. INITIAL FIRST COAT WITH AN ACRYLIC LATEX PAINT FOR EXTERIOR SURFACES AND A SECOND COAT WITH A WATER REPELLENT ACRYLIC LATEX PAINT.
H. METAL DOORS AND FRAMES SHALL RECEIVE A PRIMER COAT PLUS TWO COATS OF PAINT.
I. DIMENSIONS ARE TO STRUCTURAL COLUMN GRID, EDGE OF WINDOW OPENINGS, AND TO HINGE SIDE OF DOOR OPENINGS.
J. FILL ANULAR SPACE AT ANY AND ALL PENETRATIONS IN FIRE RATED PARTITIONS AND CEILINGS WITH APPROPRIATE FIRE STOPPING MATERIALS.
K. PROVIDE 1 HOUR SEPARATION AT STORAGE ROOM 108 AND 109 IN ACCORDANCE WITH IBC TBALE 508.2.
L. PROVIDE 2 HOUR SEPARATION BETWEEN KITCHEN AND SERVING IN ACCORDANCE WITH SCOPE OF WORK.
M. PROPANE TANKS CONNECTED FOR USE SHALL BE LOCATED OUTSIDE OF BUILDINGS IN ACCORDANCE WITH NFPA 58, 6.2.1. PROPANE TANKS CONNECTED FOR USE ARE PERMITTED TO BE INSTALLED ZERO FEET FROM BUILDINGS IN ACCORDANCE WITH NFPA 58, 6.3.1 AND TABLE 6.3.1, PROVIDED EACH CONTAINER IS LESS THAN 125 WATER GALLONS IN CAPACITY. PROPANE TANK DESIGN FOR THIS PROJECT REQUIRES (3) TANKS OF 22.5 WATER GALLONS (100 POUNDS) CAPACITY EACH. THEREFORE, TANKS ARE PERMITTED TO BE INSTALLED ADJACENT TO THE EXISITNG BUILDING. IN ACCORDNACE WITH NFPA 58, 6.3.7 (1), EXTERIOR OPENINGS LESS THAN 1 METER HORIZONTAL DISTANCE FROM CYLINDERS ARE ABOVE THE LEVEL OF DISCHARGE OF THE CYLINDER PRESSURE RELIEF DEVICE.

ROOM FINISHES: (X)

1. WALLS: PAINTED PLASTER,
   FLOOR: SEALED CONCRETE
   CEILING: PAINTED PLASTER APPLIED TO STRUCTURE
2. WALLS: 2400 MM HIGH CERAMIC TILE WAINSCOT, PAINTED PLASTER ABOVE WAINSCOT
   FLOOR: CERAMIC TILE
   CEILING: PAINTED PLASTER
3. WALLS: METAL LINER PANEL ABOVE PAINTED PLASTER
   FLOOR: SEALED CONCRETE
   CEILING: METAL LINER PANEL
4. WALLS: PAINTED PLASTER
   FLOOR: SEALED CONCRETE
   CEILING: EXPOSED METAL DECK

KEY NOTES: (X)

1. TYPICAL TOILET LAYOUT – RE: DETAIL 3/A6
2. CONCRETE STOOP – RE: DETAIL 10/A5
3. TWO–PIECE WALL THIMBLE AND TRIM PLATE FOR OPTIONAL WOOD BURNING STOVE CHIMNEY PIPE. STOVE AND PIPE BY OTHERS.
4. TRENCH DRAIN – RE: STRUCTURAL & PLUMBING
5. KITCHEN WORKTABLE
6. PROPANE STOVE WITH HOOD RE: SHEET A9
7. LINE OF CANOPY ABOVE
8. LINE OF ROOF OVERHANG ABOVE
9. POT WASH STATION – RE: PLUMBING
10. 1000 X 2200 MASONRY OPENING
11. FULL HEIGHT 300 MM CMU WALL (EXTEND TO UNDERSIDE OF PURLINS)
12. FULL HEIGHT, 300 MM CMU WALL. EXTEND TO UNDERSIDE OF METAL BUILDING RIGID FRAME. APPLY FIREPROOFING TO RIGID FRAME ABOVE RATED WALL.
13. 90 MINUTES COUNTER DOOR.
14. POSTS: 50 MM DIAMETER GALVANIZED PIPE, RE: SHEET A9.
15. GATES: GALVANIZED CHAINLINK FENCE ATTACHED TO 50 MM DIAMETER GALVANIZED PIPE. FINISHED HEIGHT SHALL BE 1800 MM MINIMUM.

LEGEND:

- F.1.4 — DOOR TYPE, SEE SHEET A5
- A — WINDOW TYPE, SEE SHEET A5
- X — KEY NOTE
- FEC — FIRE EXTINGUISHER CABINET
- 1–HOUR RATED PARTITION
- 2–HOUR RATED PARTITION
- 4–HOUR RATED PARTITION
- 1 — ROOM FINISH
- DS — METAL DOWNSPOUT

UNLESS OTHERWISE NOTED, LINEAR DIMENSIONS SHOWN ARE IN MILLIMETERS (MM)

0 2000 4000 8000
SCALE: 1: 100

US Army Corps of Engineers
Afghanistan Engineer District

SYMBOL	DESCRIPTION	DATE	APR

DESIGNED BY: DLB
DATE: 09–30–09
DWN BY: ECN
SUBMITTED BY: BAKER
CHK BY: NLJ
FILE NO.: ANPSDA–101XXX

Michael Baker Jr., Inc.
A unit of Michael Baker Corporation
Airside Business Park
100 Airside Drive
Moon Township, PA 15108
www.mbakercorp.com

AFGHAN NATIONAL POLICE
STANDARD DESIGN
DINING FACILITIES BUILDING (559 GSM)
WOOD FIRED HEAT OPTION
FLOOR PLAN

SHEET REFERENCE NUMBER:
A1

100% SUBMISSION

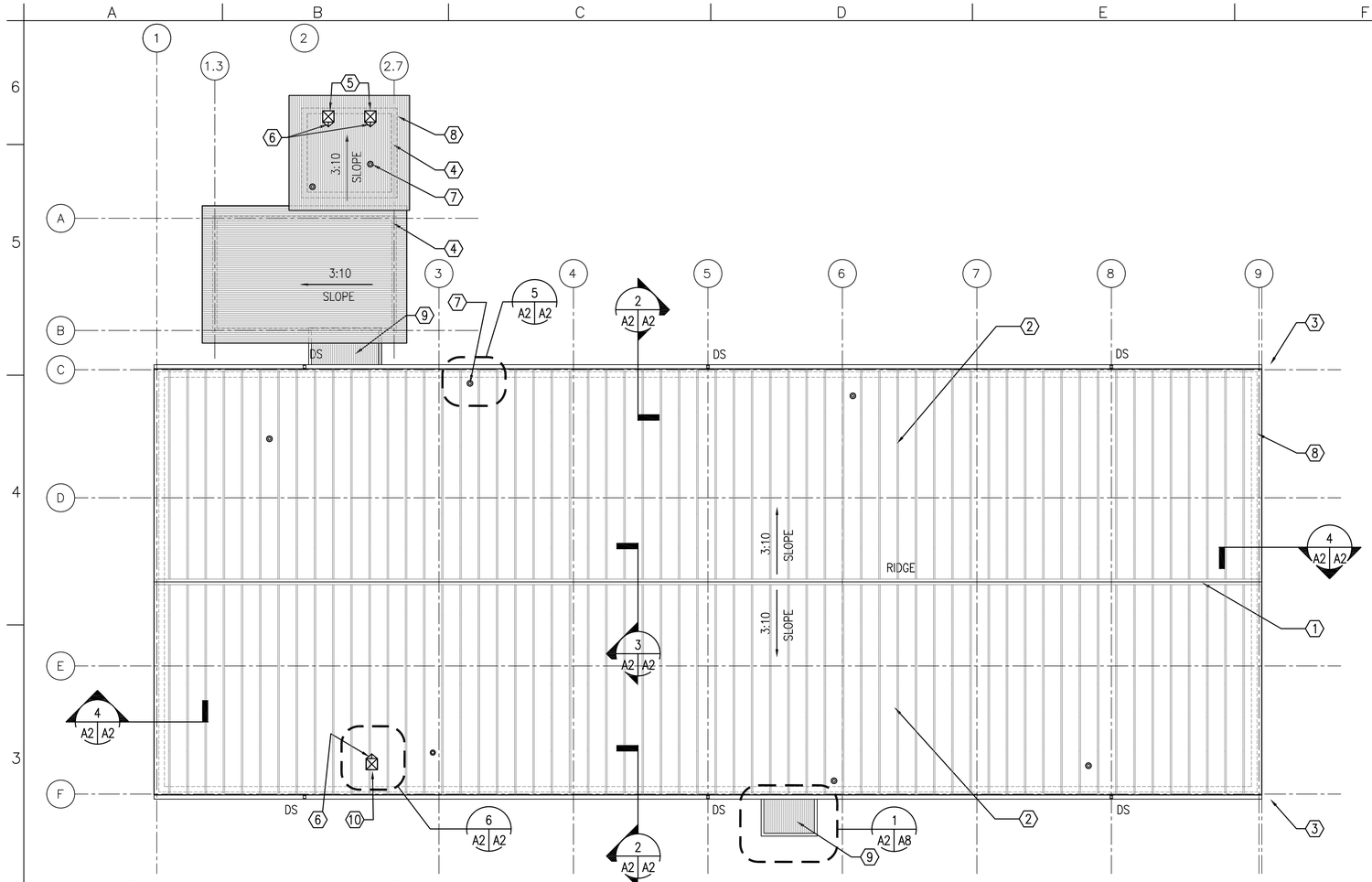

1 A2 A2 ROOF PLAN
SCALE: 1:100

ROOF PLAN NOTES:

1. THE CONTRACTOR SHALL SIZE THE GUTTERS, DOWNSPOUTS AND SPLASHBLOCKS PER REQUIREMENTS OF THE INTERNATIONAL PLUMBING CODE TO ACCOMMODATE A MAXIMUM 50 MILLIMETER PER HOUR RAINFALL.
2. PRODUCTS BY METAL BUILDING MANUFACTUER:
   A. PRE-FINISHED METAL ROOF PANELS
   B. STEEL PURLINS
   C. VINYL FACED FIBERGLASS INSULATION.
   D. ACCESSORIES.
   E. GUTTERS, DOWNSPOUTS AND SUPPORT.
   F. PRE-FINISHED METAL SIDING
3. ROOFING INSTALLATION SHALL BE CONTINUOUS WITH ALL OPERATIONS PROCEEDING TOGETHER. BEFORE CESSATION OF WORK ON EACH WORKING DAY OR WHEN WORK IS INTERRUPTED DUE TO RAINFALL OR OTHER CAUSES, THE ROOF SHALL BE SEALED AGAINST WATER INTRUSION.

KEY NOTES: (X)

1. CONTINUOUS RIDGE FLASHING
2. METAL ROOF PANEL OVER STEEL PURLIN W/ VINYL FACED FIBERGLASS INSULATION BY METAL BUILDING MANUFACTURER.
3. METAL GUTTERS AND DOWNSPOUTS BY METAL BUILDING MANUFACTURER.
4. CORRUGATED METAL ROOF PANELS
5. PREFINISHED METAL CHIMNEY CAP WITH BIRD SCREEN.
6. ROOF CRICKET – RE: DETAIL 6/A2
7. ROOF PENETRATION – RE: DETAIL 5/A2
8. LINE OF BUILDING WALL BELOW
9. METAL CANOPY
10. ROOF MOUNTED EXHAUST FAN

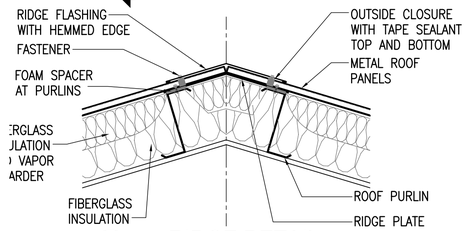

3 A2 A2 RIDGE DETAIL
SCALE: 1:10

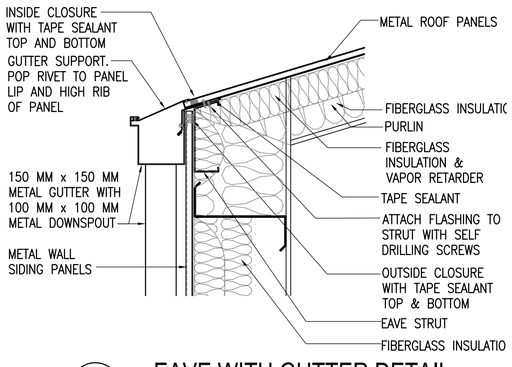

2 A2 A2 EAVE WITH GUTTER DETAIL
SCALE: 1:10

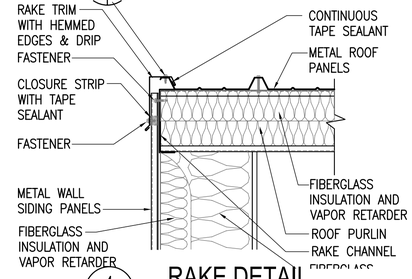

4 A2 A2 RAKE DETAIL
SCALE: 1:10

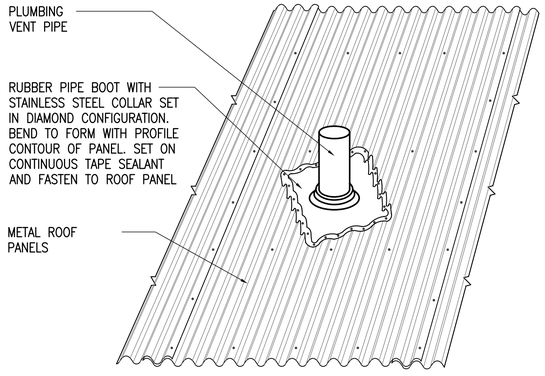

5 A2 A2 PLUMBING PIPE DETAIL
SCALE: NONE

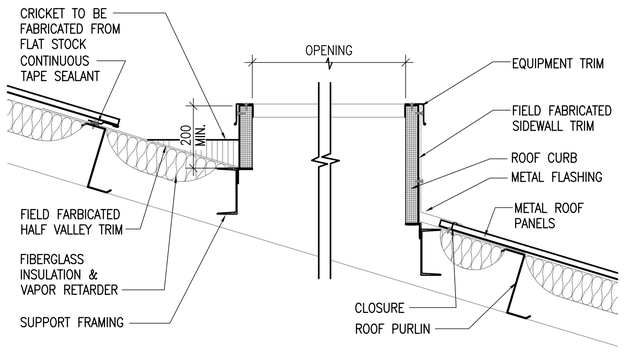

6 A2 A2 ROOF CURB DETAIL
SCALE: 1:10

UNLESS OTHERWISE NOTED, LINEAR DIMENSIONS SHOWN ARE IN MILLIMETERS (MM)

0 200 400 800
SCALE: 1: 10

0 2000 4000 8000
SCALE: 1: 100

US Army Corps of Engineers
Afghanistan Engineer District

SYMBOL	DESCRIPTION	DATE	APR

DESIGNED BY: DLB
DWN BY: ECN
CHK BY: NLJ
DATE: 09-30-09
SUBMITTED BY: BAKER
FILE NO.: ANPSDA-102XXX

Michael Baker Jr., Inc
A unit of Michael Baker Corporation
Airside Business Park
100 Airside Drive
Moon Township, PA 15108
www.mbakercorp.com

AFGHAN NATIONAL POLICE
STANDARD DESIGN
DINING FACILITIES BUILDING (559 GSM)
WOOD FIRED HEAT OPTION

ROOF PLAN AND DETAILS

SHEET REFERENCE NUMBER:
A2

100% SUBMISSION

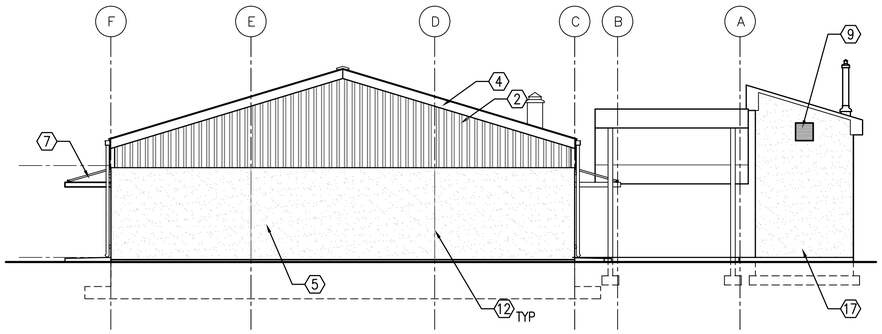

1 A1 A2 NORTH ELEVATION
SCALE: 1:100

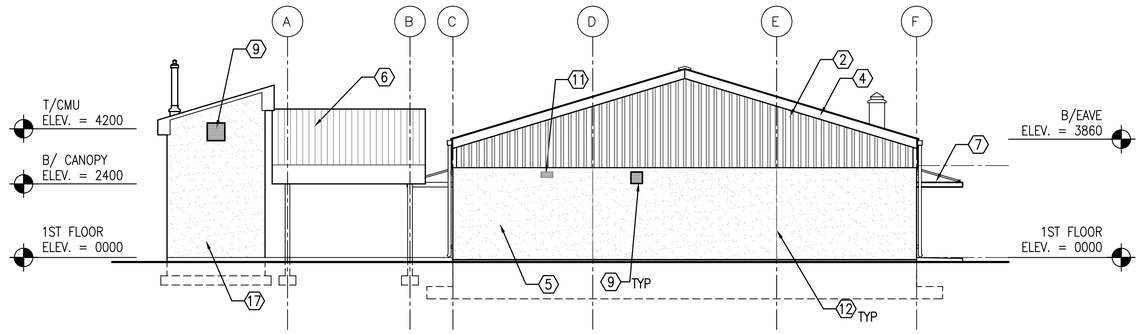

2 A1 A2 SOUTH ELEVATION
SCALE: 1:100

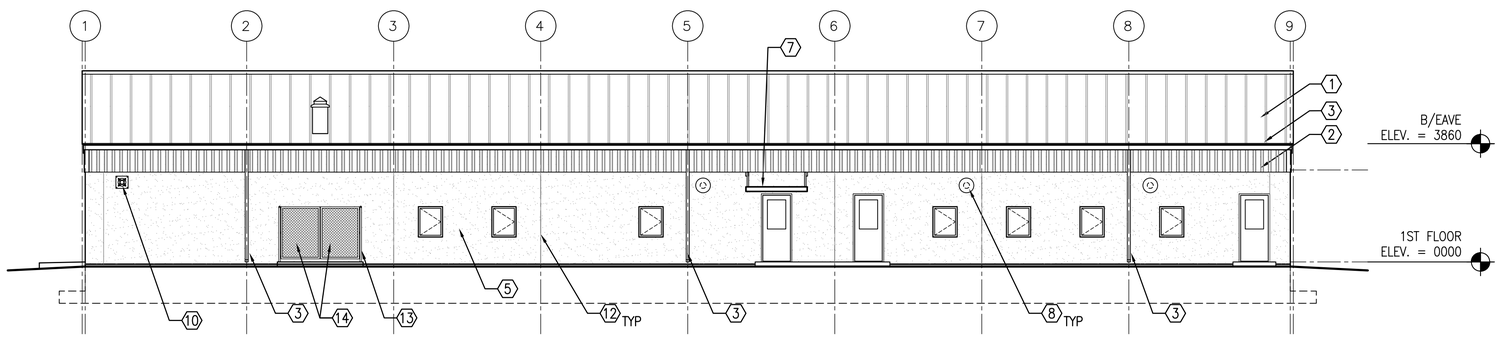

3 A1 A2 WEST ELEVATION
SCALE: 1:100

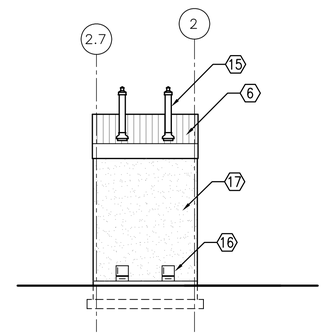

4 A1 A3 KITCHEN ANNEX ELEVATION
SCALE: 1:100

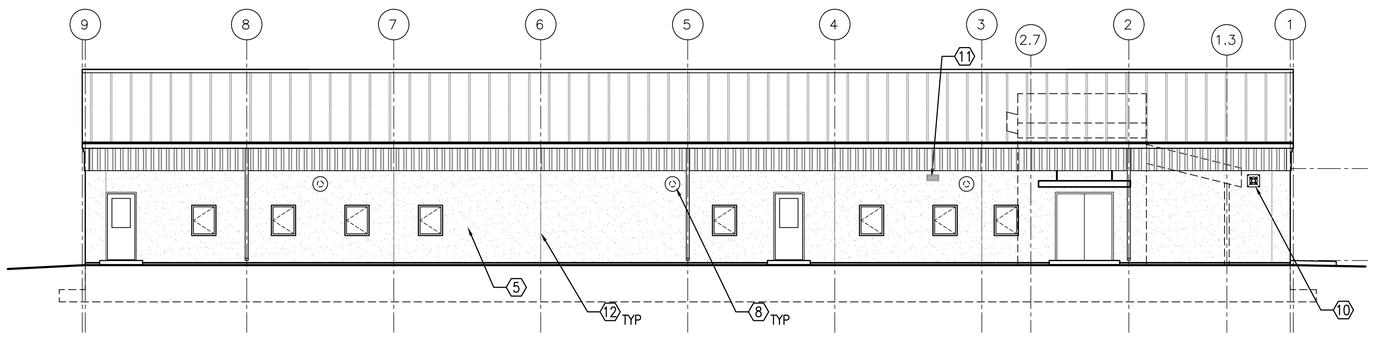

5 A1 A2 EAST ELEVATION
SCALE: 1:100

UNLESS OTHERWISE NOTED, LINEAR DIMENSIONS SHOWN ARE IN MILLIMETERS (MM)

0 2000 4000 8000
SCALE: 1: 100

KEY NOTES: (X)

1. PRE–FINISHED METAL ROOF PANELS BY METAL BUILDING MANUFACTURER.
2. PRE–FINISHED METAL WALL PANELS BY METAL BUILDING MANUFACTURER.
3. METAL GUTTERS AND DOWNSPOUTS BY METAL BUILDING MANUFACTURER, TYPICAL
4. RAKE TRIM BY METAL BUILDING MANUFACTURER
5. STUCCO AND RIGID INSULATION ON CMU
6. CORRUGATED METAL ROOF PANELS
7. METAL ENTRANCE CANOPY
8. TWO–PIECE WALL THIMBLE AND TRIM PLATE FOR OPTIONAL WOOD BURNING STOVE CHIMNEY PIPE. STOVE AND PIPE BY OTHERS.
9. LOUVER – RE: MECH
10. EXHAUST FAN – RE: MECH
11. EXHAUST FAN WITH DUCT WALL CAP – RE: MECH
12. CMU CONTROL JOINT, TYPICAL.
13. POSTS: 50 MM DIAMETER GALVANIZED PIPE, RE: SHEET A9
14. GATES: GALVANIZED CHAINLINK FENCE ATTACHED TO 50 MM DIAMETER GALVANIZED PIPE. FINISHED HEIGHT SHALL BE 1800 MM MINIMUM.
15. STAINLESS STEEL VENT PIPE
16. CAST IRON DOORS
17. STUCCO ON CMU

GENERAL NOTES:

1. COORDINATE SIZE AND LOCATION OF OPENINGS FOR MECHANICAL ITEMS WITH MECHANICAL DRAWINGS.
2. PROVIDE STRUCTURAL LINTELS AS REQUIRED – RE: STRUCT.
3. PROVIDE CMU CONTROL JOINT AT EACH STEEL COLUMN – RE: DETAIL 6/A4.

US Army Corps of Engineers
Afghanistan Engineer District

SYMBOL	DESCRIPTION	DATE	APR

DESIGNED BY: DLB
DWN BY: ECN
CHK BY: NLJ
DATE: 09–30–09
SUBMITTED BY: BAKER
FILE NO.: ANPSDA–203XXX

Michael Baker Jr., Inc.
A unit of Michael Baker Corporation
Airside Business Park
100 Airside Drive
Moon Township, PA 15108
www.mbakercorp.com

AFGHAN NATIONAL POLICE
STANDARD DESIGN
DINING FACILITIES BUILDING (559 GSM)
WOOD FIRED HEAT OPTION

EXTERIOR ELEVATIONS

SHEET REFERENCE NUMBER:
A3

100% SUBMISSION

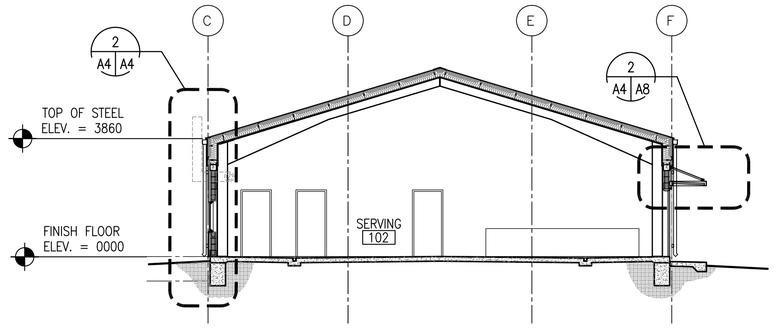

1 A1 A4 BUILDING SECTION
SCALE: 1:100

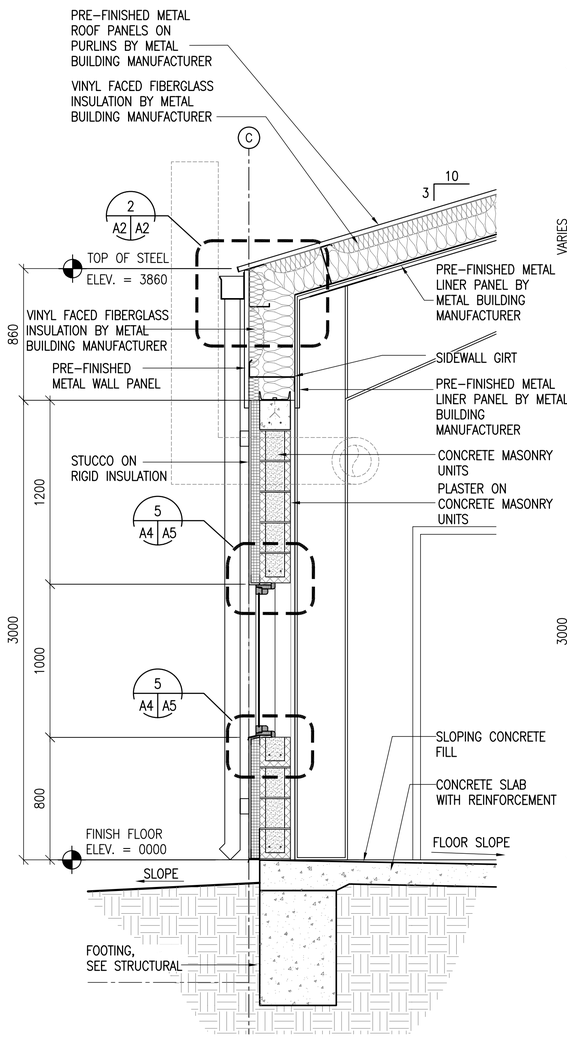

2 A1 A4 WALL SECTION
SCALE: 1:20

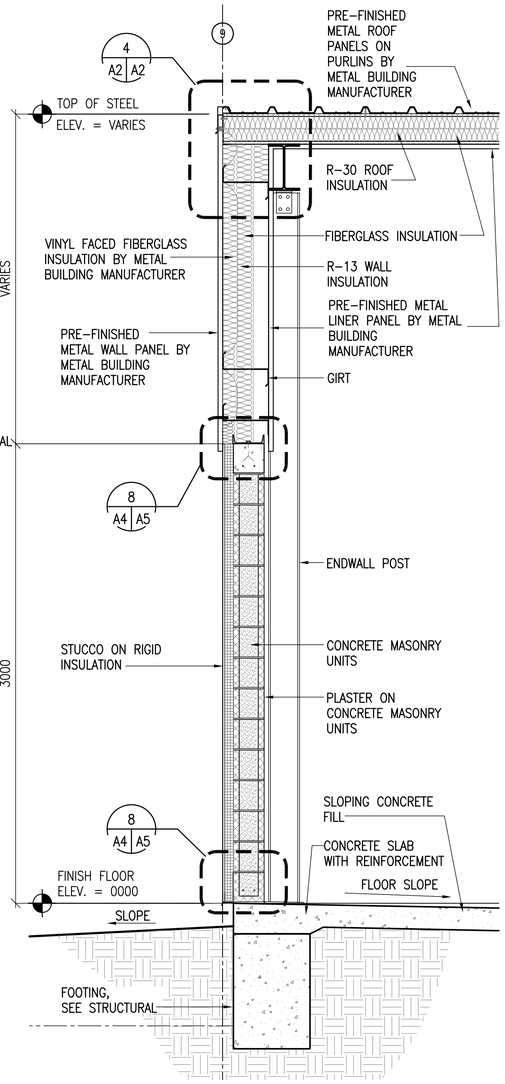

3 A1 A4 WALL SECTION
SCALE: 1:20

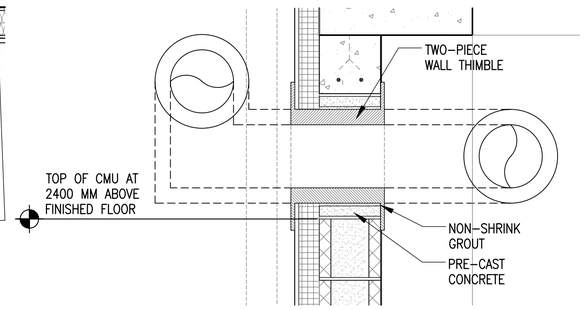

4 A4 A4 THIMBLE DETAIL, TYPICAL
SCALE: 1:10

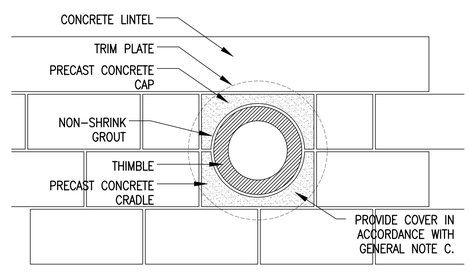

5 A4 A4 THIMBLE DETAIL, TYPICAL
SCALE: 1:10

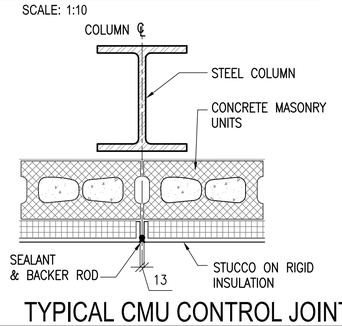

6 A4 A4 TYPICAL CMU CONTROL JOINT
SCALE: 1:10

GENERAL NOTES:

A. COORDINATE SIZE AND LOCATION OF OPENINGS FOR MECHANICAL ITEMS WITH MECHANICAL DRAWINGS.
B. PROVIDE STRUCTURAL LINTELS AS REQUIRED – RE: STRUCT
C. PROVIDE 480 MM SQUARE, 1.5 MM THICK GALVANIZED SHEET METAL COVER WITH 13 MM HEMMED EDGE FOR WALL THIMBLE UNTIL STOVE PIPE IS PROVIDED. INSTALL COVER ON EXTERIOR FACE OF THIMBLE TRIM PLATE. COVER SHALL BE SET IN SILICONE SEALANT AND FASTENED WITH 4 STAINLESS STEEL SCREWS. ALIGN FASTENER LOCATIONS WITH COVER PLATE FASTENER OPENINGS SO ADDITIONAL FASTENER PENETRATIONS ARE NOT CREATED IN EXTERIOR FINISH.

UNLESS OTHERWISE NOTED, LINEAR DIMENSIONS SHOWN ARE IN MILLIMETERS (MM)

0 200 400 800
SCALE: 1: 10

0 400 800 1600
SCALE: 1: 20

0 2000 4000 8000
SCALE: 1: 100

US Army Corps of Engineers
Afghanistan Engineer District

SYMBOL	DESCRIPTION	DATE	APR

DESIGNED BY: DLB
DATE: 09-30-09
DWN BY: ECN
SUBMITTED BY: BAKER
CHK BY: NLJ
FILE NO.: ANPSDA-304XXX

Michael Baker Jr., Inc
A unit of Michael Baker Corporation
Airside Business Park
100 Airside Drive
Moon Township, PA 15108
www.mbakercorp.com

AFGHAN NATIONAL POLICE
STANDARD DESIGN
DINING FACILITIES BUILDING (559 GSM)
WOOD FIRED HEAT OPTION

BUILDING & WALL SECTIONS

SHEET REFERENCE NUMBER:
A4

100% SUBMISSION

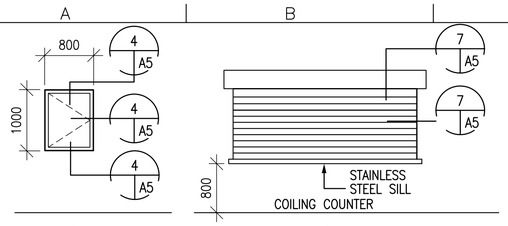

1 A5 A5 WINDOW TYPES
SCALE: 1:50

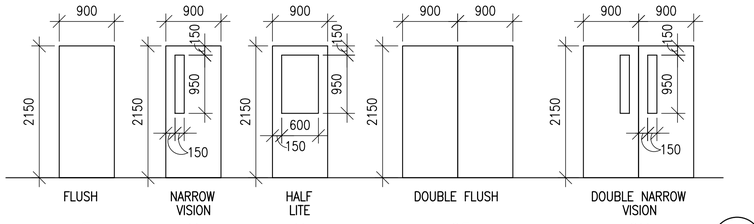

2 A5 A5 DOOR TYPES
SCALE: 1:50

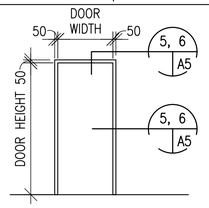

3 A5 A5 FRAME TYPES
SCALE: 1:50

US Army Corps of Engineers
Afghanistan Engineer District

DOOR TYPES NOTES:

1. INTERIOR AND EXTERIOR METAL DOORS AND FRAME COLORS SHALL MATCH ADJACENT WALL COLORS AS SELECTED BY THE CONTRACTING OFFICER.
2. HARDWARE SHALL BE HEAVY DUTY, COMMERCIAL GRADE, STAINLESS STEEL WITH A MATTE FINISH.
3. FRAMES, EXCEPT FIRE-RATED FRAMES, SHALL BE MOUNTED AND ADJUSTED IN ACCORDANCE WITH MANUFACTURER'S INSTRUCTIONS. FRAMES SHALL BE FASTENED WITH MINIMUM OF THREE FASTENING POINTS PER SIDE AT REGULAR INTERVALS.
4. DIMENSIONS SHOWN ON DOOR SCHEDULE ARE BASED UPON MODULAR MASONRY (OR ROUGH OPENING), HEIGHT OF 2200mm FOR STANDARD PERSONNEL DOORS. CONTRACTOR SHALL COORDINATE WITH DOOR SUPPLIER TO ENSURE THAT DIMENSIONS OF DOORS AND FRAMES PROVIDED ARE COMPATIBLE WITH DOOR OPENING DIMENSIONS.
5. DOORS SHALL BE 45 MINUTE DOORS AS REQUIRED IN 1 HOUR RATED WALLS. (IBC TABLE 715.4).
6. DOORS SHALL BE 90 MINUTE DOORS AS REQUIRED IN 2 HOUR RATED WALLS (IBC TABLE 715.4)

WINDOW TYPES NOTES:

1. ALL EXTERIOR WINDOWS SHALL BE WOOD WITH INSECT SCREENS. WINDOWS SHALL BE COMMERCIAL GRADE.
2. GLAZING SHALL BE ACRYLIC SHEET.

DOOR HARDWARE TYPES:

HW-1 1-1/2 PR HINGES
1 EA EXIT DEVICE, SURFACE MOUNTED F08
1 EA CYLINDER. GRADE 1
1 EA DOOR CLOSER, C02061,LOW RESISTANCE
1 EA THRESHOLD J32130

HW-3 1-1/2 PR HINGES, A8112
1 EA LOCKSET W/LEVERS. GRADE 1
1 EA DOOR CLOSER, C02061,LOW RESISTANCE
1 EA DOOR STOP, L02101 OR L02161
1 EA KICKPLATE, J102
1 EA MOP PLATE, J103

HW-4 1-1/2 PR HINGES
1 EA LOCKSET W/LEVERS. GRADE 1
1 EA STOP L02101 OR L02161

HW-5 1-1/2 PR HINGES, A8112
1 EA LOCKSET W/LEVERS. GRADE 1
1 EA DOOR STOP, L02101 OR L02161
2 EA MOP PLATE, J103

HW-6 1-1/2 PR HINGES
1 EA LOCKSET,F93 ENTRY LOCK W/LEVERS. GRADE 1
1 EA DOOR CLOSER, C02061,LOW RESISTANCE
1 EA THRESHOLD J32130

HW-9 3 PR HINGES
2 EA EXIT DEVICE, SURFACE MOUNTED F08
2 EA CYLINDER. GRADE 1
2 EA DOOR CLOSER, C02061,LOW RESISTANCE
1 EA THRESHOLD J32130
1 EA REMOVEABLE MULLION
1 EA COORDINATOR

DOOR TYPE — 2F.1.5 — HDW TYPE
FRAME TYPE

UNLESS OTHERWISE NOTED, LINEAR DIMENSIONS SHOWN ARE IN MILLIMETERS (MM)

0 200 400 800
SCALE: 1: 10

0 400 800 1600
SCALE: 1: 20

0 1000 2000 4000
SCALE: 1: 50

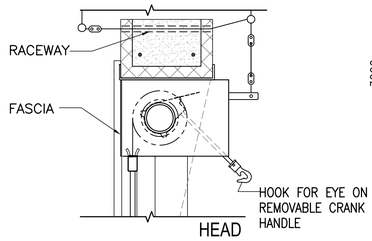

7 A5 A5 COUNTER DOOR DETAILS
SCALE: 1:10

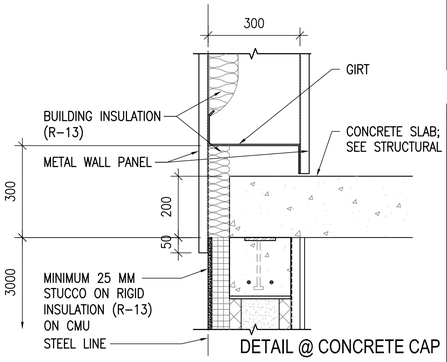

9 A5 A5 EXTERIOR STUCCO DETAIL
SCALE: 1:10

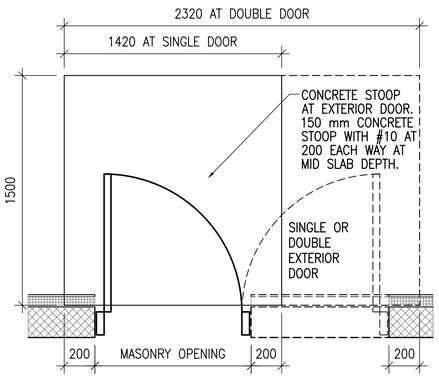

10 A5 A5 CONCRETE STOOP DETAIL
SCALE: 1:10

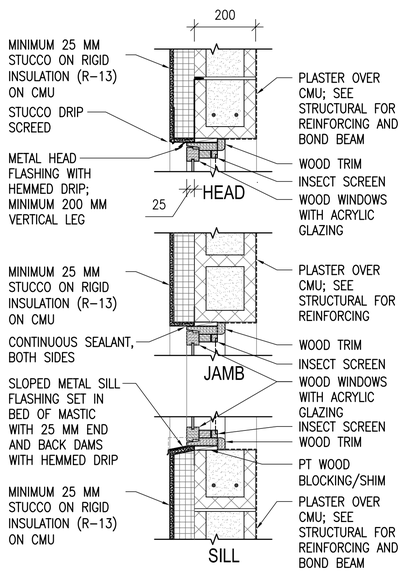

4 A5 A5 WINDOW DETAILS
SCALE: 1:10

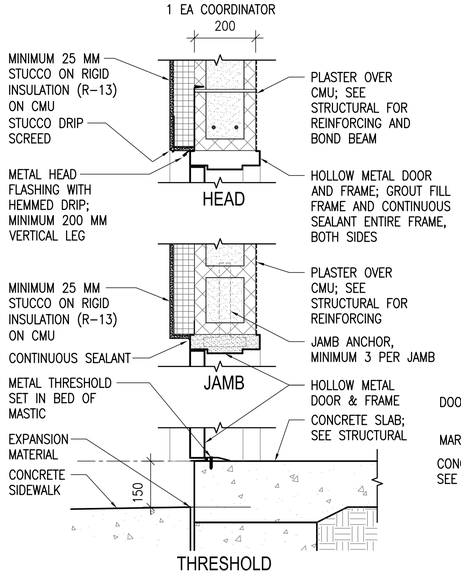

5 A5 A5 EXTERIOR DOOR DETAILS
SCALE: 1:10

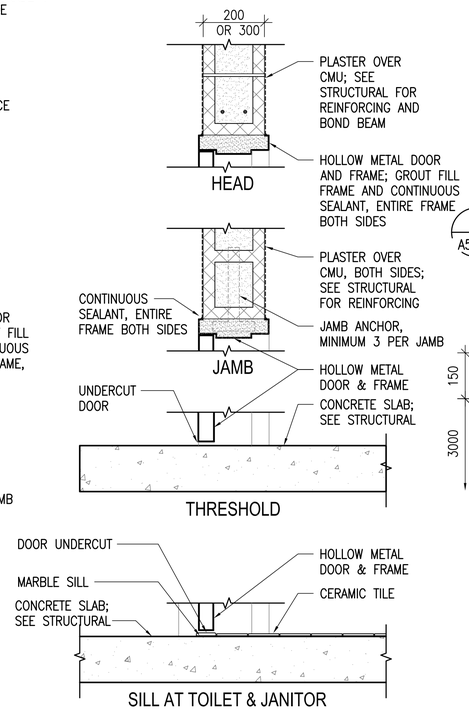

6 A5 A5 INTERIOR DOOR DETAILS
SCALE: 1:10

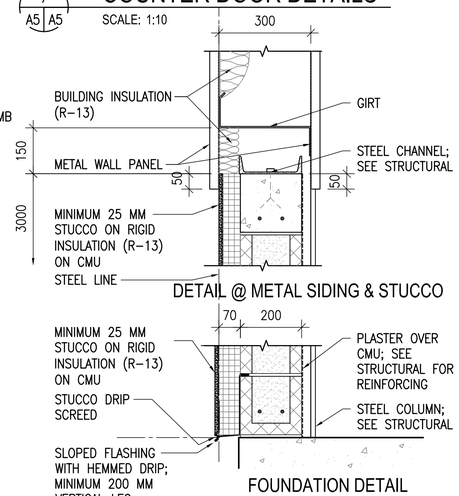

8 A5 A5 EXTERIOR STUCCO DETAILS
SCALE: 1:10

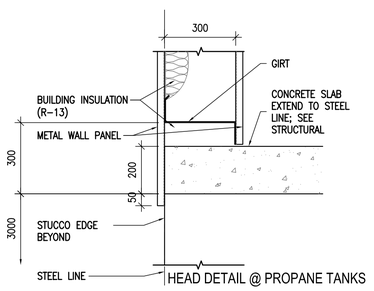

11 A5 A5 EXTERIOR STUCCO DETAIL
SCALE: 1:10

SYMBOL	DESCRIPTION	DATE	APR

DATE:	09-30-09
SUBMITTED BY:	BAKER
FILE NO.:	ANPSDA-505XXX
DESIGNED BY:	BAKER
DWN BY:	AR
CHK BY:	KRC

Michael Baker Jr., Inc.
A unit of Michael Baker Corporation
Airside Business Park
100 Airside Drive
Moon Township, PA 15108
www.mbakercorp.com

AFGHAN NATIONAL POLICE
STANDARD DESIGN
DINING FACILITIES BUILDING (559 GSM)
WOOD FIRED HEAT OPTION

DOOR, WINDOW & FINISH TYPES & DETAILS

SHEET REFERENCE NUMBER:
A5

100% SUBMISSION

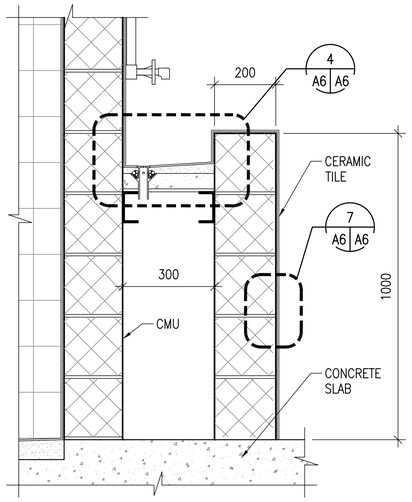

1 A1 A6 **LAVATORY SECTION**

SCALE: 1:10

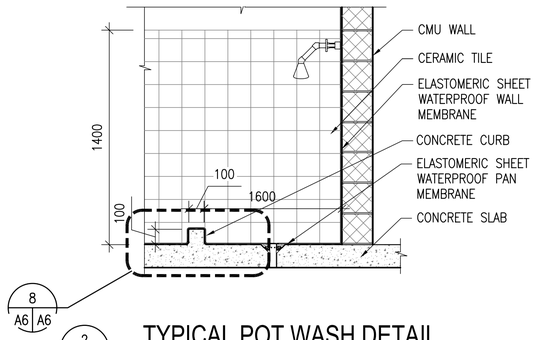

2 A1 A6 **TYPICAL POT WASH DETAIL**

SCALE: 1:20

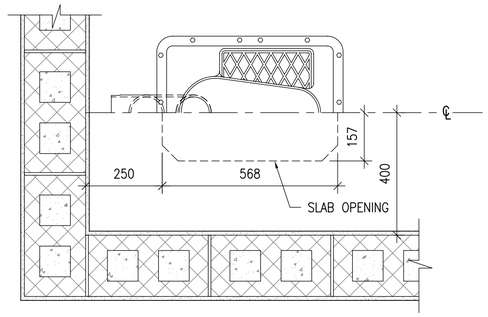

3 A1 A6 **TYPICAL TOILET DETAIL**

SCALE: 1:10

ZURN Z1290 EASTERN STYLE WATER CLOSET

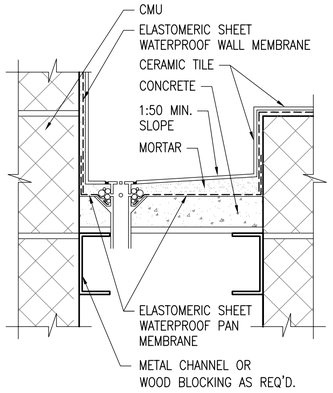

4 A6 A6 **LAVATORY DETAIL**

SCALE: NTS

NOTE: WALL MEMBRANE LAPS OVER PAN MEMBRANE

TCA METHOD: B417

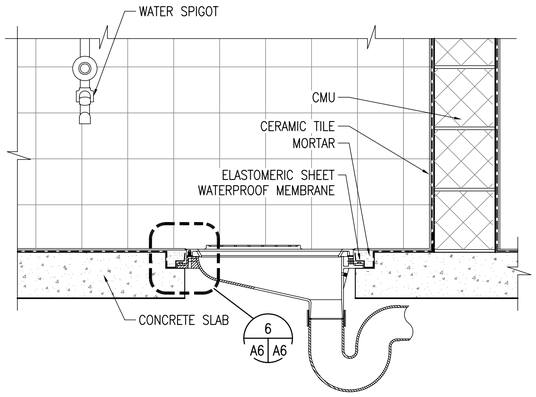

5 A1 A6 **THIN SET LATRINE**

SCALE: 1:10

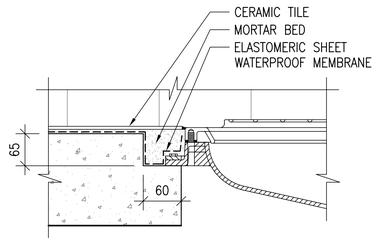

6 A6 A6 **MOUNTING DETAIL**

SCALE: NTS

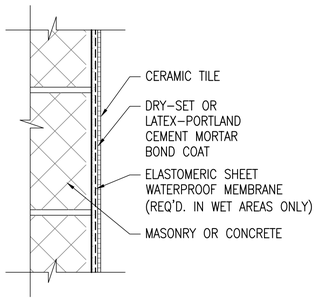

7 A6 A6 **WALL DETAIL**

SCALE: NTS

TCA METHOD: W222

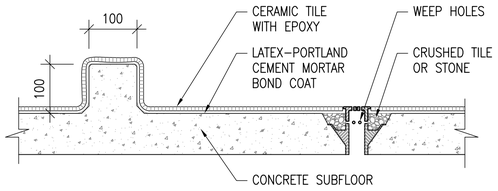

8 A6 A6 **THIN SET CURB DETAIL**

SCALE: 1:5

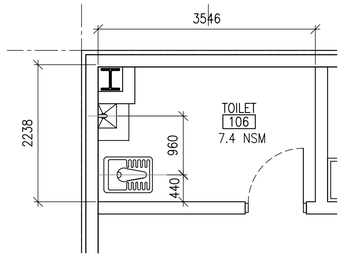

9 A1 A6 **ENLARGED TOILET PLAN**

SCALE: 1:50

UNLESS OTHERWISE NOTED, LINEAR DIMENSIONS SHOWN ARE IN MILLIMETERS (MM)

0 100 200 400 — SCALE: 1: 5

0 200 400 800 — SCALE: 1: 10

0 400 800 1600 — SCALE: 1: 20

0 1000 2000 4000 — SCALE: 1: 50

US Army Corps of Engineers

Afghanistan Engineer District

SYMBOL	DESCRIPTION	DATE	APR

DESIGNED BY: DLB | DATE: 09-30-09

DWN BY: ECN | SUBMITTED BY: BAKER

CHK BY: NLJ | FILE NO.: ANPSDA-506XXX

Michael Baker Jr., Inc
A unit of Michael Baker Corporation
Airside Business Park
100 Airside Drive
Moon Township, PA 15108
www.mbakercorp.com

AFGHAN NATIONAL POLICE
STANDARD DESIGN
DINING FACILITIES BUILDING (559 GSM)
WOOD FIRED HEAT OPTION

LATRINE DETAILS

SHEET REFERENCE NUMBER:

A6

100% SUBMISSION

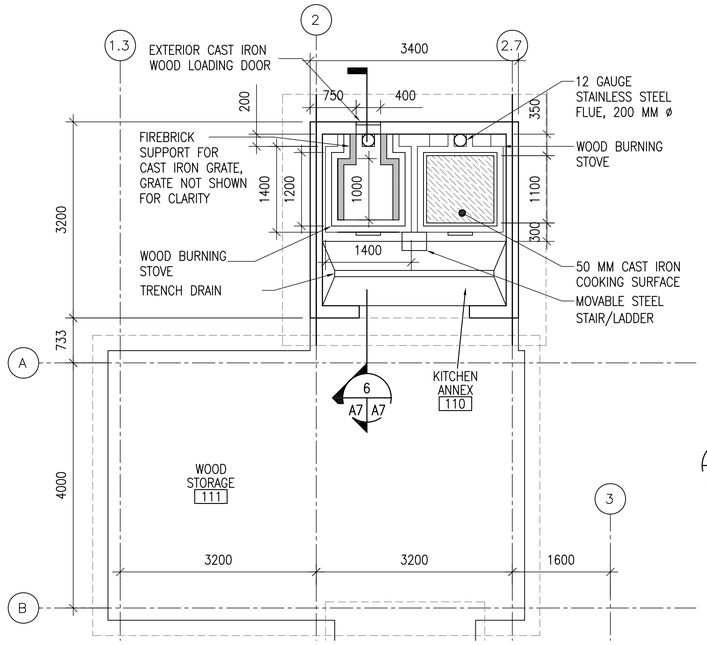

1 A1 A7 ENLARGED KITCHEN ANNEX PLAN

SCALE: 1:50

NOTE: SEE SHEET A2 FOR ROOF PLAN

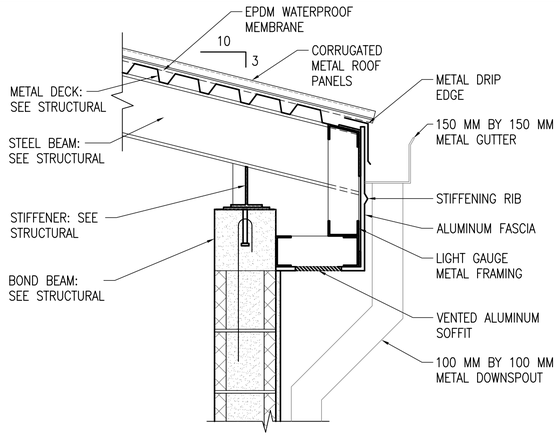

2 A7 A7 LOWER EAVE DETAIL

SCALE: 1:10

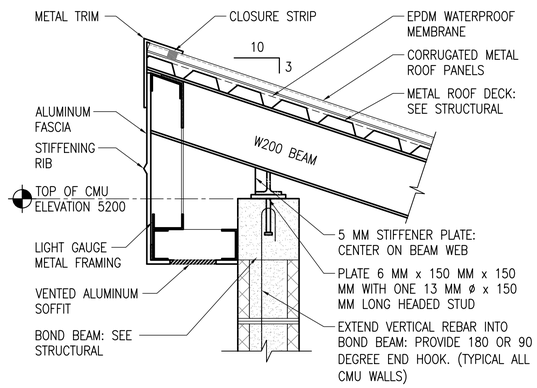

3 A7 A7 UPPER EAVE DETAIL

SCALE: 1:10

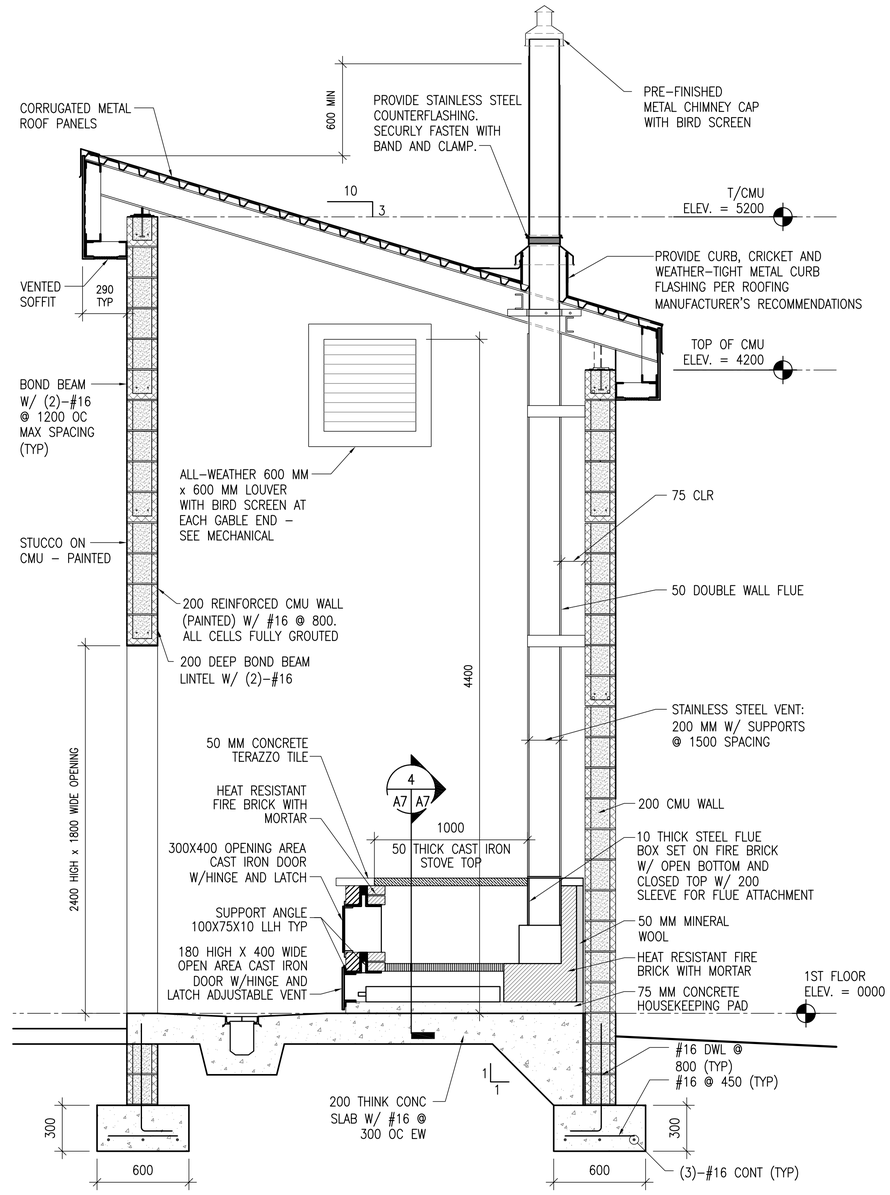

6 A7 A7 KITCHEN ANNEX SECTION

SCALE: 1:20

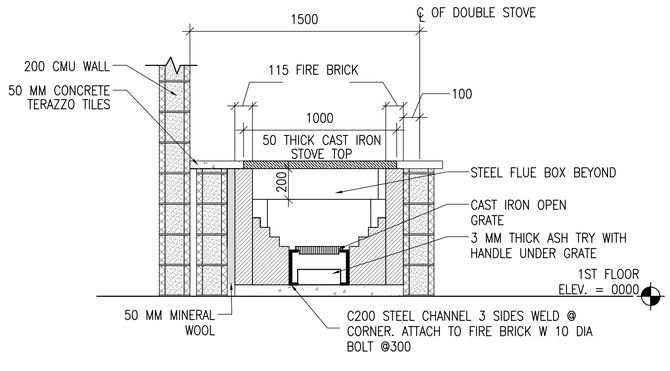

4 A7 A7 FIRE BOX SECTION

SCALE: 1:20

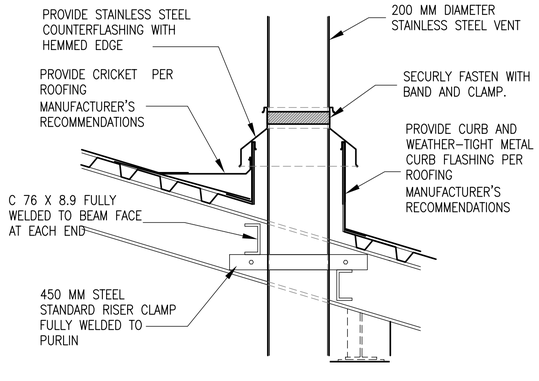

5 A7 A7 ROOF CURB AND FLASHING AT CHIMNEY

SCALE: 1:10

UNLESS OTHERWISE NOTED, LINEAR DIMENSIONS SHOWN ARE IN MILLIMETERS (MM)

0 200 400 800
SCALE: 1: 10

0 400 800 1600
SCALE: 1: 20

0 1000 2000 4000
SCALE: 1: 50

US Army Corps of Engineers
Afghanistan Engineer District

SYMBOL	DESCRIPTION	DATE	APR

DESIGNED BY: DLB
DWN BY: ECN
CHK BY: NLJ
DATE: 09-30-09
SUBMITTED BY: BAKER
FILE NO.: ANPSDA-507XXX

Michael Baker Jr., Inc
A unit of Michael Baker Corporation
Airside Business Park
100 Airside Drive
Moon Township, PA 15108
www.mbakercorp.com

AFGHAN NATIONAL POLICE
STANDARD DESIGN
DINING FACILITIES BUILDING (559 GSM)
WOOD FIRED HEAT OPTION

DFAC ENLARGED KITCHEN ANNEX AND WOOD STORAGE PLANS AND DETAILS

SHEET REFERENCE NUMBER:
A7

100% SUBMISSION

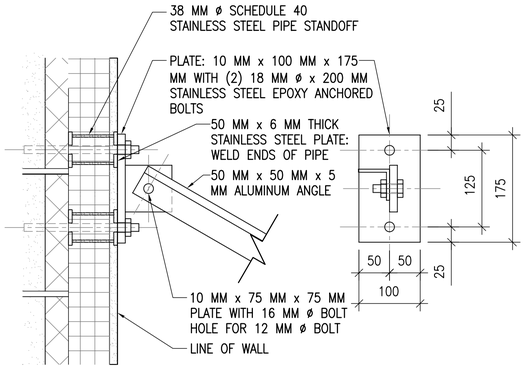

3 A8 A8 TOP CONNECTION DETAIL
SCALE: 1:5

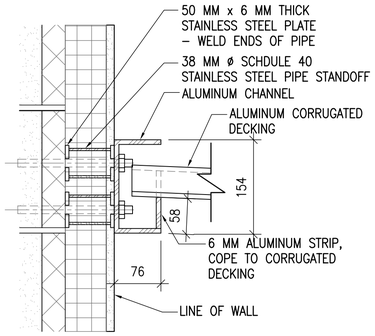

4 A8 A8 BOTTOM CONNECTION DETAIL
SCALE: 1:5

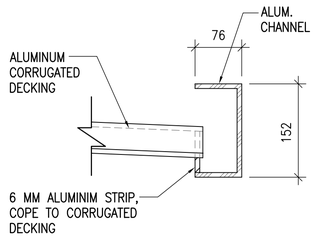

5 A8 A8 FRONT SECTION
SCALE: 1:5

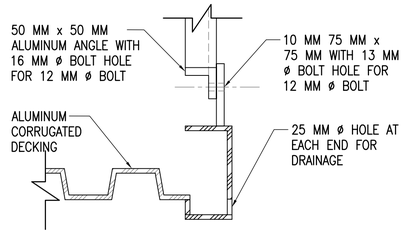

6 A8 A8 SIDE SECTION
SCALE: 1:5 1 AS SHOWN 1 OPP. HAND

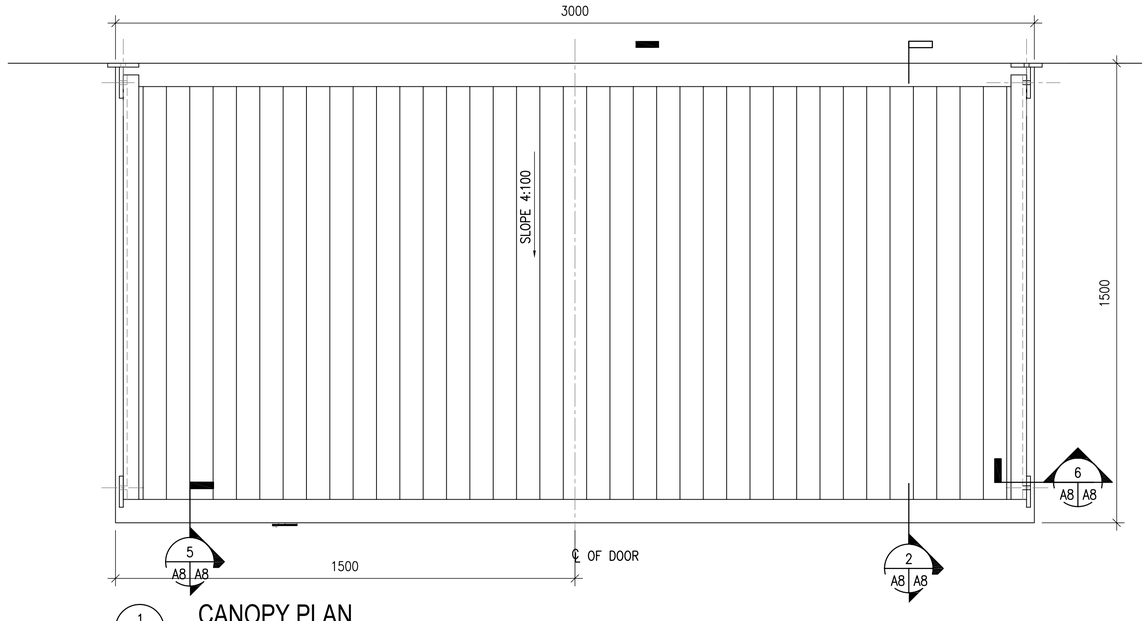

1 A8 A8 CANOPY PLAN
SCALE: 1:10

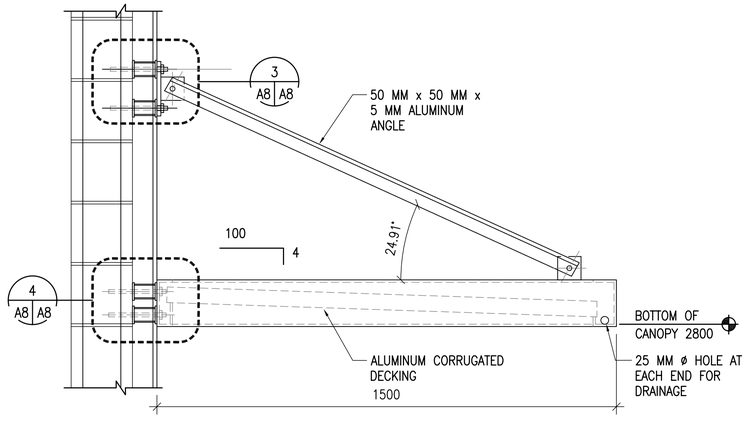

2 A8 A8 CANOPY SECTION
SCALE: 1:10

UNLESS OTHERWISE NOTED, LINEAR DIMENSIONS SHOWN ARE IN MILLIMETERS (MM)

0 100 200 400
SCALE: 1: 5

0 200 400 800
SCALE: 1: 10

US Army Corps of Engineers
Afghanistan Engineer District

SYMBOL	DESCRIPTION	DATE	APR

DESIGNED BY: DLB
DWN BY: ECN
CHK BY: NLJ
DATE: 09-30-09
SUBMITTED BY: BAKER
FILE NO.: ANPSDA-508XXX

Michael Baker Jr., Inc
A unit of Michael Baker Corporation
Airside Business Park
100 Airside Drive
Moon Township, PA 15108
www.mbakercorp.com

AFGHAN NATIONAL POLICE
STANDARD DESIGN
DINING FACILITIES BUILDING (559 GSM)
WOOD FIRED HEAT OPTION

MISCELLANEOUS DETAILS

SHEET REFERENCE NUMBER:
A8

100% SUBMISSION

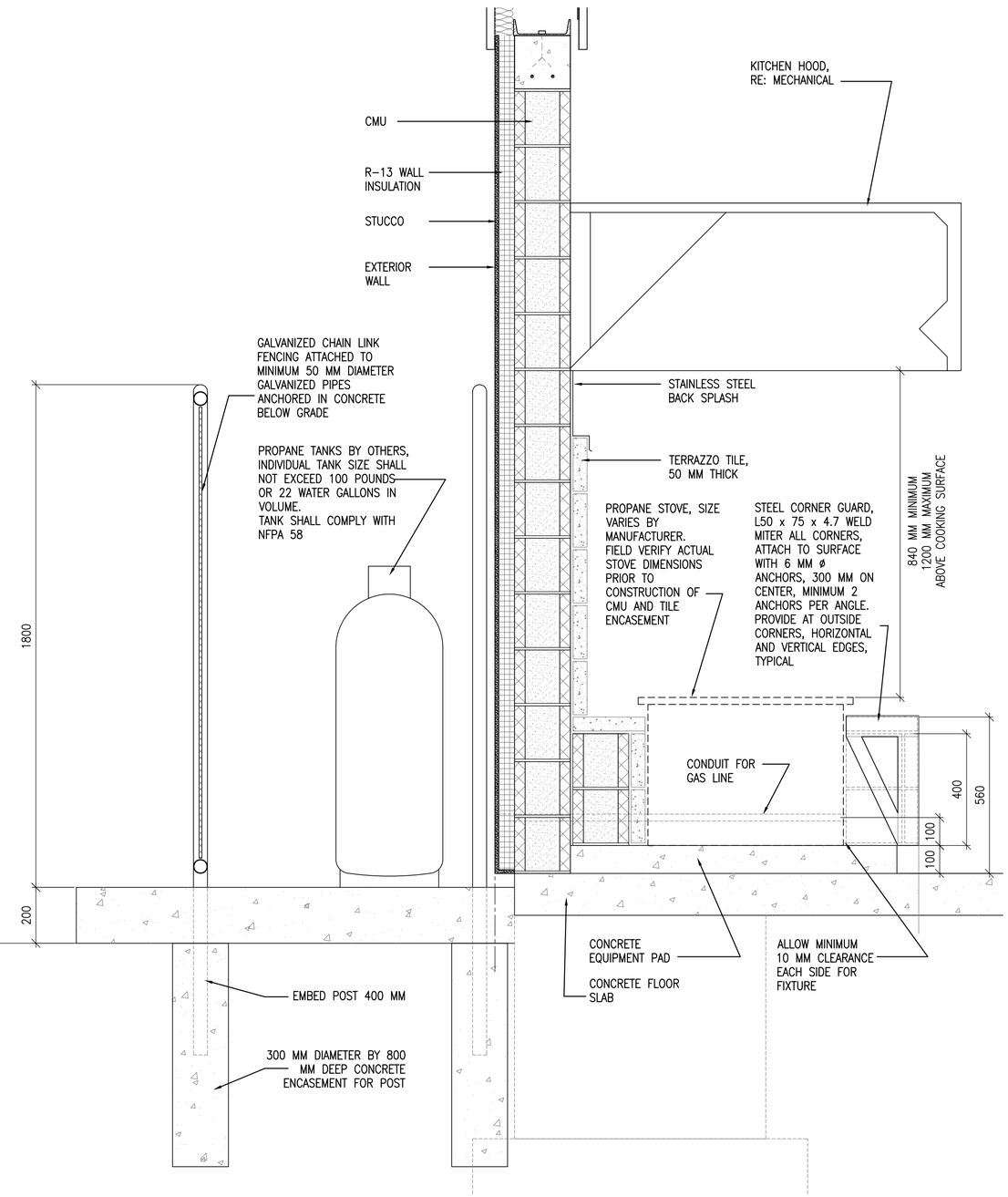

1 A9 A9 PROPANE STOVE ENCASEMENT SECTION

SCALE: 1:20

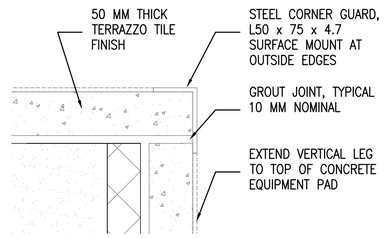

2 A9 A9 CORNER GUARD DETAIL

SCALE: NOT TO SCALE

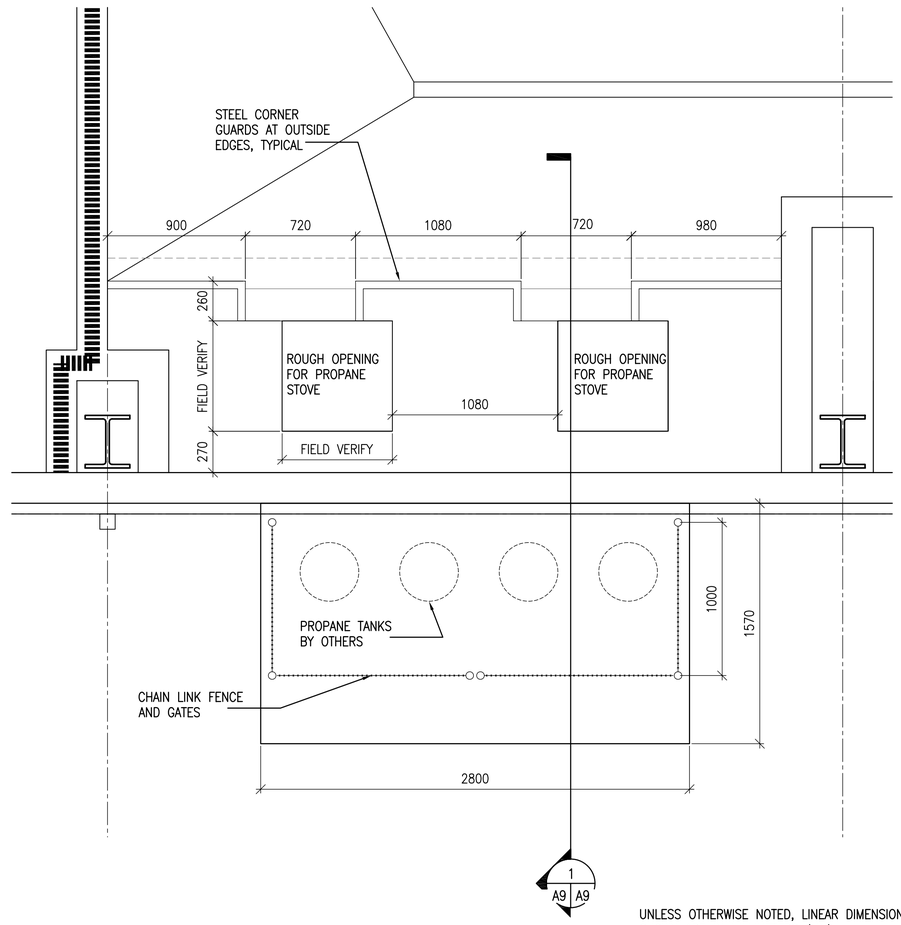

3 A1 A9 PROPANE STOVE ENCASEMENT PLAN

SCALE: 1:10

UNLESS OTHERWISE NOTED, LINEAR DIMENSIONS SHOWN ARE IN MILLIMETERS (MM)

0 400 800 1600

SCALE: 1: 20

0 200 400 800

SCALE: 1: 10

US Army Corps of Engineers

Afghanistan Engineer District

SYMBOL	DESCRIPTION	DATE	APR

DESIGNED BY: NLJ	DATE: 09-30-09
DWN BY: NLJ	SUBMITTED BY: BAKER
CHK BY: NLJ	FILE NO.: ANPSDA-509XXX

Michael Baker Jr, Inc
A unit of Michael Baker Corporation
Airside Business Park
100 Airside Drive
Moon Township, PA 15108
www.mbakercorp.com

AFGHAN NATIONAL POLICE
STANDARD DESIGN
DINING FACILITIES BUILDING (559 GSM)
WOOD FIRED HEAT OPTION

ENLARGED PROPANE STOVE PLAN AND DETAILS

SHEET REFERENCE NUMBER:

A9

100% SUBMISSION

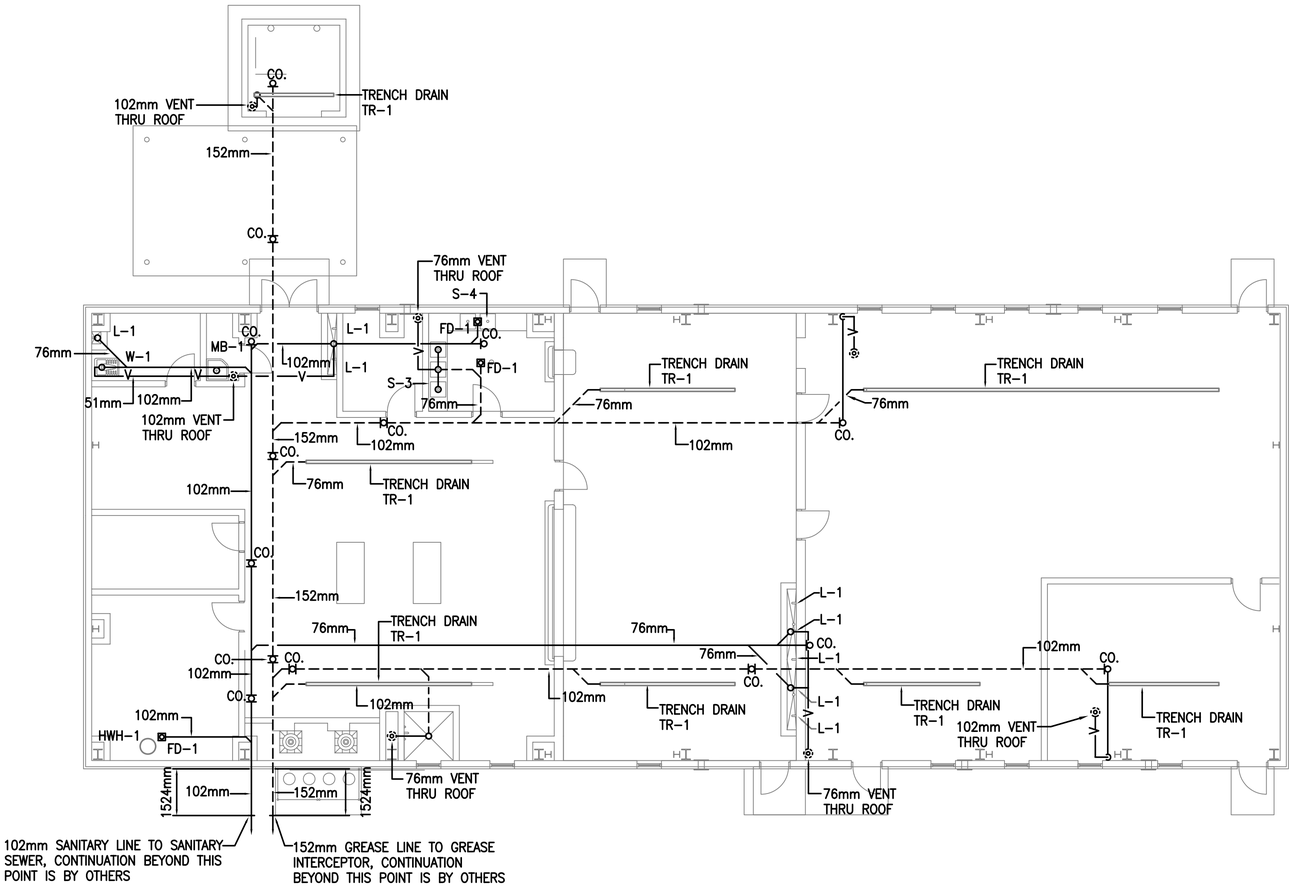

1 P1 P1 DFAC, KITCHEN ANNEX, AND WOOD STORAGE FLOOR PLAN - PLUMBING (SANITARY)

SCALE: 1:100

FLOOR PLAN NOTES:

1. DO NOT SCALE DRAWINGS – ALL DIMENSIONS AND CONDITIONS SHALL BE CHECKED AND VERIFIED BY THE CONTRACTOR AT THE SITE.
2. ALL WORK PERFORMED ON THIS BUILDING SHALL BE IN COMPLIANCE WITH ALL PERTINENT CODES, RULES, ORDINANCES AND REGULATIONS OF THE GOVERNING AUTHORITIES.
3. ALL WORK PERFORMED UNDER AND IN CONNECTION WITH THESE DRAWINGS AND SPECIFICATIONS SHALL BE IN STRICT COMPLIANCE WITH THE LATEST SAFETY AND HEALTH STANDARDS.
4. REPORT ANY DISCREPANCIES FOUND IN THE PLUMBING DRAWINGS AND/OR IN THE SPECIFICATIONS DURING THE BIDDING PROCESS FOR CLARIFICATION BY THE ENGINEER.
5. ALL EASTERN STYLE WATER CLOSETS IN THIS FACILITY ARE TO HAVE THE FIXTURE DESIGNATION OF W-1. EACH FIXTURE SHALL HAVE A (1) INCH (25mm) COLD WATER CONNECTION AND A (4) INCH (102mm) SANITARY CONNECTION.
6. ALL TROUGH FIXTURES IN THIS FACILITY ARE TO HAVE THE FIXTURE DESIGNATION OF L-1. EACH FIXTURE SHALL HAVE A (1/2 INCH) (13mm) COLD WATER, (1/2 INCH) (13mm) HOT WATER CONNECTION AND A (3 INCH) (76mm) SANITARY CONNECTION.
7. PLUMBING CONTRACTOR TO PROVIDE WATER HAMMER ARRESTORS AT ALL WATER CLOSETS.
8. PLUMBING CONTRACTOR TO PROVIDE TRAP PRIMERS AND 1/2" (13mm) COLD WATER LINES FOR ALL FLOOR DRAINS. COLD WATER LINES TO BE UNDER THE FLOOR FROM TRAP PRIMERS TO TRAPS ON FLOOR DRAINS.
9. REFER TO SHEET P4 FOR DETAILS AND SYMBOLS.
10. ALL WATER LINES TO BE EXPOSED. RUN LINES TIGHT TO CEILING AND WALL.

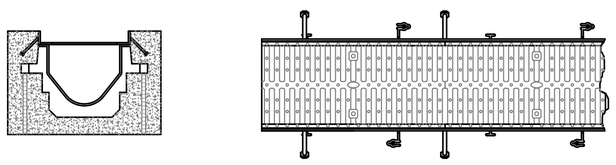

NOTE:
COORDINATE DEPTH, WIDTH, AND SLOPE OF TRENCH DRAIN WITH ARCHITECTURAL PLANS.

2 P1 P1 TRENCH DRAIN DRAIN DETAIL

SCALE: NO SCALE

LEGEND

COLD WATER
HOT WATER
SANITARY ABOVE GROUND
GREASE WASTE UNDER GROUND
VENT LINE

1 0 1 2 3 4 5 6 7 8 9
1:100

US Army Corps of Engineers
Afghanistan Engineer District

SYMBOL	DESCRIPTION	DATE	APR

DESIGNED BY: RMH
DATE: 09-30-09
DWN BY: RMH
SUBMITTED BY: BAKER
CHK BY: CJM III
FILE NO.: ANPSDP-101XXX

Michael Baker Jr., Inc
A unit of Michael Baker Corporation
Airside Business Park
100 Airside Drive
Moon Township, PA 15108
www.mbakercorp.com

AFGHAN NATIONAL POLICE
STANDARD DESIGN
DINING FACILITIES BUILDING (559 GSM)
WOOD FIRED HEAT OPTION

FLOOR PLAN - PLUMBING

SHEET REFERENCE NUMBER:
P1

100% SUBMISSION

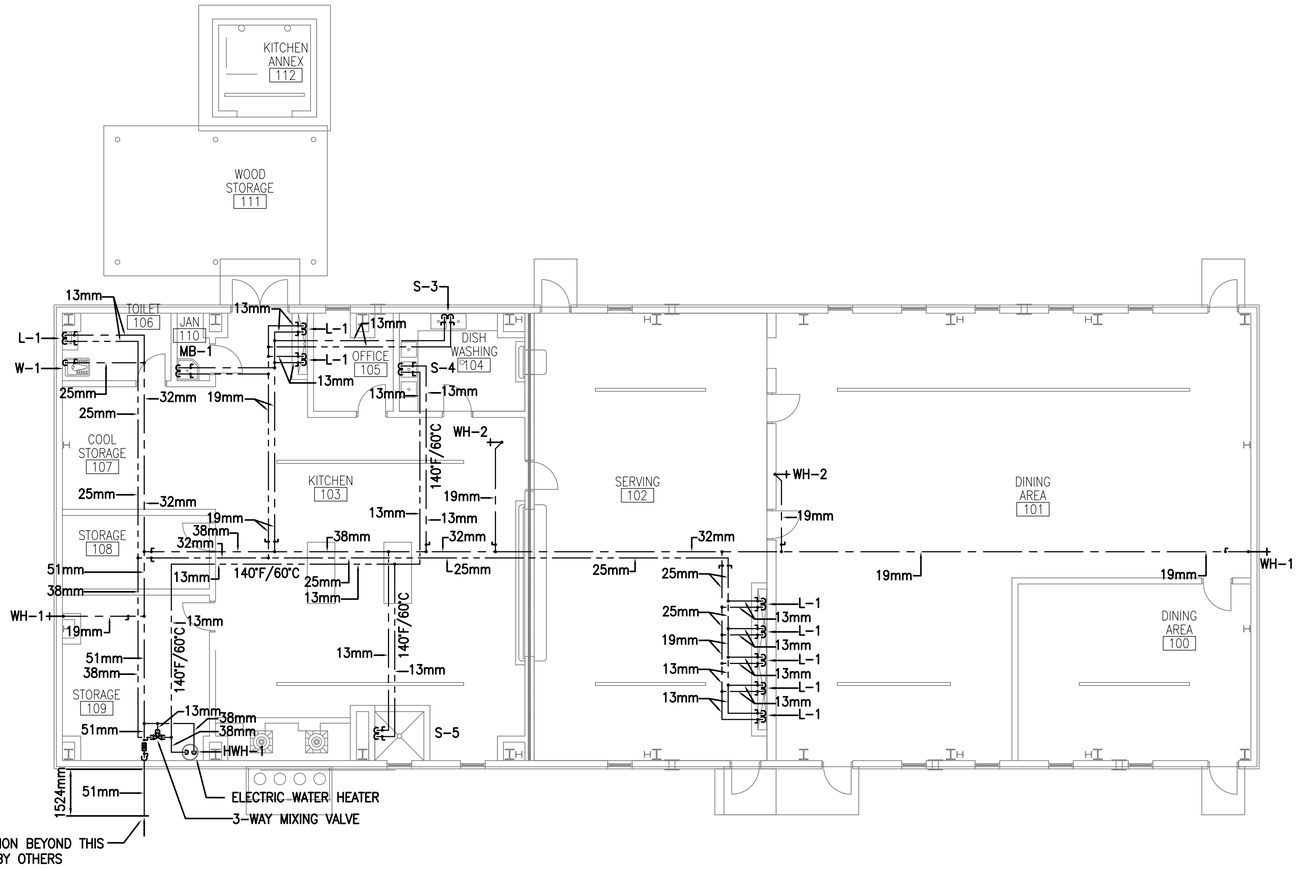

1 P2 P2 DFAC, KITCHEN ANNEX, AND WOOD STORAGE FLOOR PLAN - PLUMBING (WATER)

SCALE: 1:100

FLOOR PLAN NOTES:

1. DO NOT SCALE DRAWINGS – ALL DIMENSIONS AND CONDITIONS SHALL BE CHECKED AND VERIFIED BY THE CONTRACTOR AT THE SITE.
2. ALL WORK PERFORMED ON THIS BUILDING SHALL BE IN COMPLIANCE WITH ALL PERTINENT CODES, RULES, ORDINANCES AND REGULATIONS OF THE GOVERNING AUTHORITIES.
3. ALL WORK PERFORMED UNDER AND IN CONNECTION WITH THESE DRAWINGS AND SPECIFICATIONS SHALL BE IN STRICT COMPLIANCE WITH THE LATEST SAFETY AND HEALTH STANDARDS.
4. REPORT ANY DISCREPANCIES FOUND IN THE PLUMBING DRAWINGS AND/OR IN THE SPECIFICATIONS DURING THE BIDDING PROCESS FOR CLARIFICATION BY THE ENGINEER.
5. ALL EASTERN STYLE WATER CLOSETS IN THIS FACILITY ARE TO HAVE THE FIXTURE DESIGNATION OF W-1. EACH FIXTURE SHALL HAVE A (1) INCH (25mm) COLD WATER CONNECTION AND A (4) INCH (102mm) SANITARY CONNECTION.
6. ALL TROUGH FIXTURES IN THIS FACILITY ARE TO HAVE THE FIXTURE DESIGNATION OF L-1. EACH FIXTURE SHALL HAVE A (1/2 INCH) (13mm) COLD WATER, (1/2 INCH) (13mm) HOT WATER CONNECTION AND A (3 INCH) (76mm) SANITARY CONNECTION.
7. PLUMBING CONTRACTOR TO PROVIDE WATER HAMMER ARRESTORS AT ALL WATER CLOSETS.
8. PLUMBING CONTRACTOR TO PROVIDE TRAP PRIMERS AND 1/2" (13mm) COLD WATER LINES FOR ALL FLOOR DRAINS. COLD WATER LINES TO BE UNDER THE FLOOR FROM TRAP PRIMERS TO TRAPS ON FLOOR DRAINS.
9. REFER TO SHEET S-P1 & S-P2 FOR DETAILS AND SYMBOLS.
10. ALL WATER LINES TO BE EXPOSED. RUN LINES TIGHT TO CEILING AND WALL.

NOTE:

1. SEE SHEET P4 FOR PROPANE PIPING ISOMETRIC AND TANK SUPPORT.
2. EXTEND PROPANE LINE THRU WALL IN PIPE SLEEVE TO A POINT 100mm ABOVE FINISH FLOOR. PIPE SHALL TERMINATE IN FRONT OF PROPANE STOVE WITH SHUT OFF VALVE AND QUICK DISCONNECT NIPPLE.

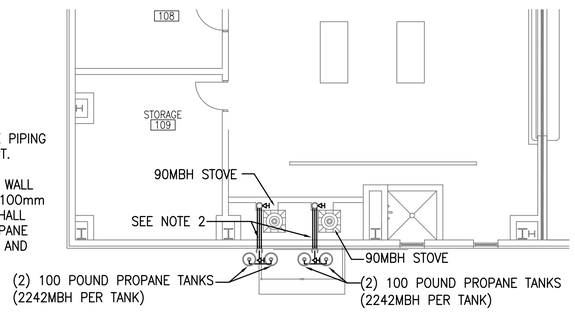

2 P2 P2 PARTIAL DFAC, KITCHEN ANNEX, AND WOOD STORAGE FLOOR PLAN - PLUMBING (PROPANE)

SCALE: 1:100

LEGEND

COLD WATER
HOT WATER
SANITARY ABOVE GROUND
GREASE WASTE UNDER GROUND
VENT LINE

1 0 1 2 3 4 5 6 7 8 9
1:100

US Army Corps of Engineers
Afghanistan Engineer District

SYMBOL	DESCRIPTION	DATE	APR

DESIGNED BY: RMH
DWN BY: RMH
CHK BY: CJM III
DATE: 09-30-09
SUBMITTED BY: BAKER
FILE NO.: ANPSDP-102XXX

Michael Baker Jr., Inc
A unit of Michael Baker Corporation
Airside Business Park
100 Airside Drive
Moon Township, PA 15108
www.mbakercorp.com

AFGHAN NATIONAL POLICE
STANDARD DESIGN
DINING FACILITIES BUILDING (559 GSM)
WOOD FIRED HEAT OPTION

FLOOR PLAN - PLUMBING

SHEET REFERENCE NUMBER:
P2

100% SUBMISSION

GENERAL NOTES:

1. DO NOT SCALE DRAWINGS – ALL DIMENSIONS AND CONDITIONS SHALL BE CHECKED AND VERIFIED BY THE CONTRACTOR AT THE SITE.
2. ALL WORK PERFORMED ON THIS BUILDING SHALL BE IN COMPLIANCE WITH ALL PERTINENT CODES, RULES, ORDINANCES AND REGULATIONS OF THE GOVERNING AUTHORITIES.
3. ALL WORK PERFORMED UNDER AND IN CONNECTION WITH THESE DRAWINGS AND SPECIFICATIONS SHALL BE IN STRICT COMPLIANCE WITH THE LATEST SAFETY AND HEALTH STANDARDS.
4. REPORT ANY DISCREPANCIES FOUND IN THE PLUMBING DRAWINGS AND/ OR IN THE SPECIFICATIONS DURING THE BIDDING PROCESS FOR CLARIFICATION BY THE ENGINEER.

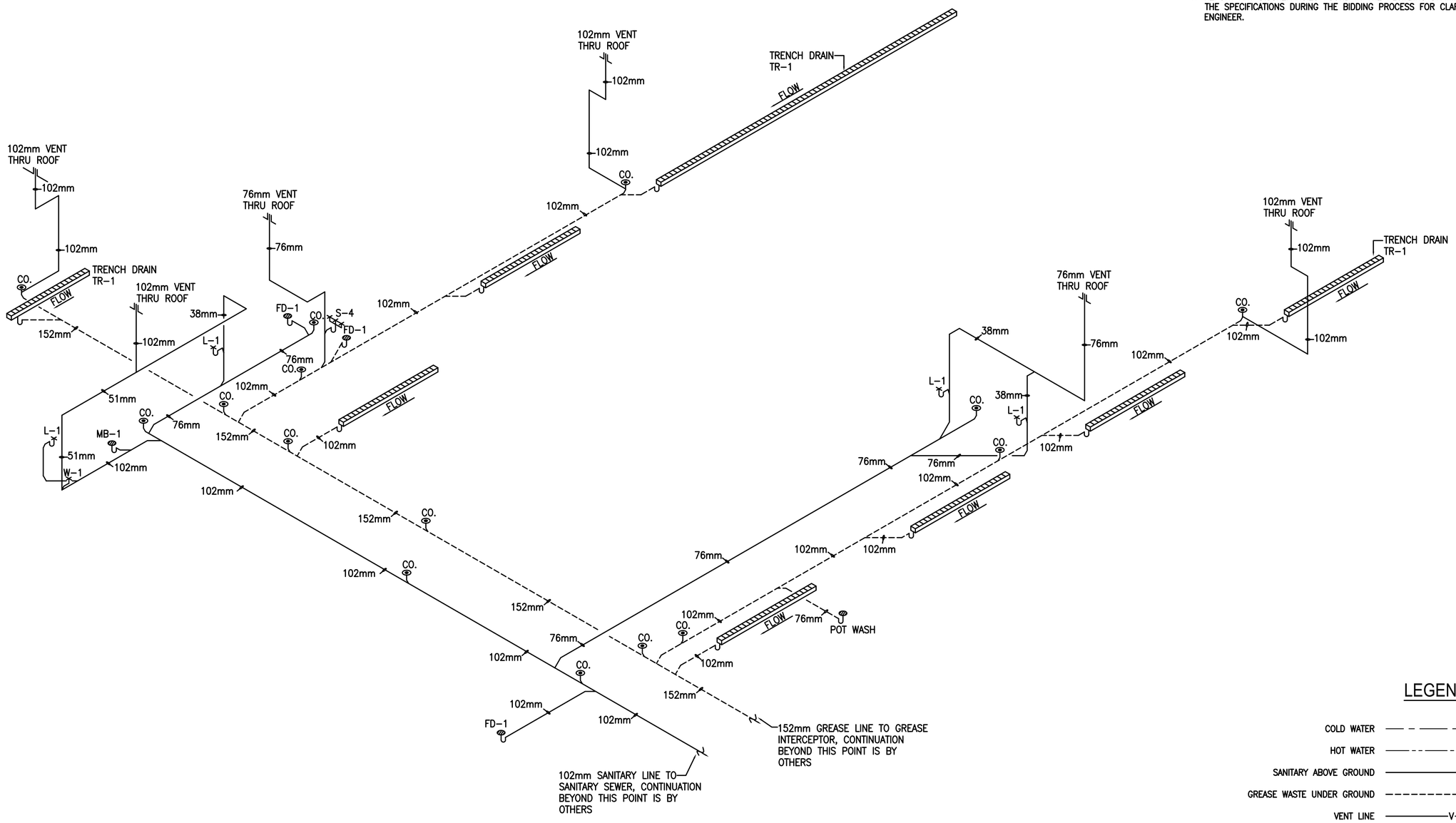

LEGEND

COLD WATER
HOT WATER
SANITARY ABOVE GROUND
GREASE WASTE UNDER GROUND
VENT LINE

1 0 1 2 3 4 5 6 7 8 9
1:100

1 P3 P3 DFAC, KITCHEN ANNEX, AND WOOD STORAGE FLOOR PLAN - DRAINAGE ISOMETRIC
SCALE: 1:100

US Army Corps of Engineers
Afghanistan Engineer District

SYMBOL	DESCRIPTION	DATE	APR

DESIGNED BY: RMH
DATE: 09-30-09
DWN BY: RMH
SUBMITTED BY: BAKER
CHK BY: CJM III
FILE NO.: ANPSDP-903XXX

Michael Baker Jr., Inc
A unit of Michael Baker Corporation
Airside Business Park
100 Airside Drive
Moon Township PA 15108
www.mbakercorp.com

AFGHAN NATIONAL POLICE
STANDARD DESIGN
DINING FACILITIES BUILDING (559 GSM)
WOOD FIRED HEAT OPTION

DRAINAGE ISOMETRIC

SHEET REFERENCE NUMBER:
P3

100% SUBMISSION

PLUMBING LEGEND – SYMBOLS AND ABBREVIATIONS

- SANITARY SEWER PIPING
- VENT PIPING (V)
- COLD WATER PIPING (CW)
- HOT WATER PIPING (HW)
- 140° HOT WATER PIPING (HW)
- BALL VALVE
- UNION
- WATER HAMMER ARRESTOR (WHA)
- BACKFLOW PREVENTER
- CLEANOUT (CO.)
- THERMOMETER
- PRESSURE GAUGE (PG)
- FLOOR DRAIN
- ROOF PENETRATION

DEG. OR °	DEGREE	NO.	NUMBER
DIA. OR ø	DIAMETER	OZ.	OUNCE
E.C.	ELECTRICAL CONTRACTOR	O.D.	OUTSIDE DIAMETER
°F	FAHRENHEIT	%	PERCENT
GA.	GAGE OR GAUGE	PH. OR ø	PHASE (ELECTRICAL)
GAL.	GALLONS	P.C.	PLUMBING CONTRACTOR
G.P.H.	GALLONS PER HOUR	LBS.	POUNDS
G.P.M.	GALLONS PER MINUTE	P.S.I.	POUNDS PER SQUARE INCH
HD.	HEAD	P.S.I.G.	POUNDS PER SQUARE INCH GAGE
HP.	HORSEPOWER	PRESS.	PRESSURE
HR.	HOUR(S)	S.O.V.	SHUT-OFF VALVE
I.D.	INSIDE DIAMETER	SPEC.	SPECIFICATION
KW.	KILOWATT	STD.	STANDARD
M.B.H.	1,000 B.T.U./HR.	TEMP.	TEMPERATURE
MIN.	MINIMUM	TYP.	TYPICAL
N.C.	NORMALLY CLOSED	V.T.R.	VENT THROUGH ROOF
N.O.	NORMALLY OPEN	V.	VOLT
N.T.S.	NOT TO SCALE	VOL.	VOLUME
		W.	WATT

FIXTURE LIST

TYPE	ITEM	SOIL & WASTE	VENT	COLD WATER	HOT WATER	REMARKS	REMARKS 2
W-1	EASTERN STYLE WATER CLOSET	102mm	51mm	25mm	------	FLUSH VALVE	LOW FLOW EFFICIENT TYPE
L-1	TROUGH FIXTURE	38mm	38mm	13mm	13mm	FABRICATED IN FIELD	LOW FLOW EFFICIENT TYPE
L-2	LAVATORY	38mm	38mm	13mm	13mm	WALL HUNG FIXTURE	LOW FLOW EFFICIENT TYPE
SH-1	SHOWER	FLOOR DRAIN	------	13mm	13mm	PRIVATE SHOWER	LOW FLOW EFFICIENT TYPE
S-1	COUNTERTOP SINK	38mm	38mm	13mm	13mm	559mm x 635mm x 165mm STAINLESS STEEL	LOW FLOW EFFICIENT TYPE
S-2	WALL HUNG SINK	38mm	38mm	13mm	13mm	STAINLESS STEEL WALL HUNG TREATMENT ROOM SINK	LOW FLOW EFFICIENT TYPE
S-3	2-COMPARTMENT SINK	INDIRECT WASTE	------	13mm	13mm	STAINLESS STEEL PREP SINK	LOW FLOW EFFICIENT TYPE
S-4	3-COMPARTMENT SINK	38mm	38mm	13mm	13mm	STAINLESS STEEL DISHWASHING SINK	LOW FLOW EFFICIENT TYPE
S-5	POT WASH	38mm	38mm	13mm	13mm	STAINLESS STEEL DISHWASHING SINK	LOW FLOW EFFICIENT TYPE
MB-1	MOP BASIN	76mm	51mm	19mm	19mm	------	LOW FLOW EFFICIENT TYPE
HWH-1	WATER HEATER	---	---	SEE DWG.	SEE DWG.	151 LITER ELECTRIC WATER HEATER, 380/3ø, 24KW	----------

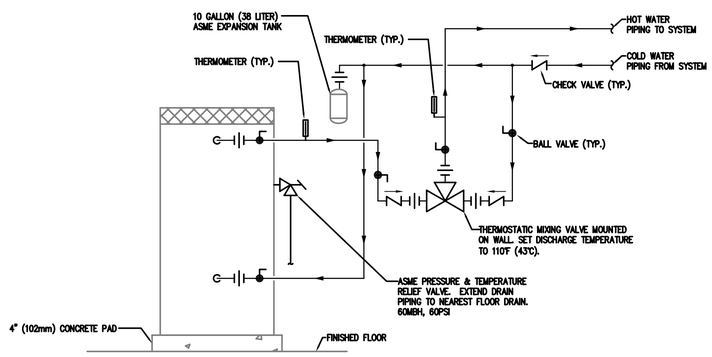

ELECTRIC WATER HEATER PIPING SCHEMATIC
NO SCALE

GENERAL PLUMBING KITCHEN NOTES:

1. ALL ROUGH-INS AND FINAL PLUMBING CONNECTIONS SHALL BE PERFORMED IN STRICT ACCORDANCE WITH THE LATEST CODE REQUIREMENTS. PLUMBING CONTRACTOR SHALL BE RESPONSIBLE FOR VERIFICATION AND COMPLIANCE WITH ALL APPLICABLE CODE REQUIREMENTS.

2. PLUMBING CONTRACTOR SHALL BE RESPONSIBLE FOR PROVIDING AND INSTALLING ALL FAUCETS, VACUUM BREAKERS, CHECK VALVES, ETC. REQUIRED FOR ITEMS OF FOOD SERVICE EQUIPMENT THAT ARE NOT SUPPLIED AS PART OF THE EQUIPMENT, AND FOR PROVIDING FINAL CONNECTIONS TO SAME.

3. PLUMBING CONTRACTOR SHALL PROVIDE ALL FLOOR DRAINS, P-TRAPS, FLOOR SINKS, TRAPS, SHUT-OFF VALVES, SHOCK ABSORBERS, PIPING, GAUGES, FITTINGS, AND ANY ADDITIONAL PIPING AND/OR FITTINGS REQUIRED FOR EQUIPMENT INSTALLATION.

GENERAL PLUMBING NOTES:

1. ALL SANITARY PIPING SHALL BE BELOW FLOOR, AND ALL WATER, AND VENT PIPING SHALL BE TIGHT TO CEILING, UNLESS OTHERWISE NOTED.

2. PLUMBING CONTRACTOR SHALL COORDINATE PLUMBING WORK WITH THE WORK OF ALL OTHER TRADES. VERIFY THE LOCATIONS OF ALL UTILITIES AT THE SITE PRIOR TO THE START OF ANY PLUMBING WORK.

3. COORDINATE ALL ACCESS PANEL LOCATIONS WITH THE ARCHITECT AND GENERAL CONTRACTOR.

4. ALL SANITARY PIPING BELOW SLAB SHALL BE A MINIMUM OF 51mm, UNLESS OTHERWISE NOTED OR AS REQUIRED BY THE LOCAL AUTHORITY HAVING JURISDICTION.

5. ALL SANITARY BRANCH LINES SHALL BE SLOPED AT 6mm PER 305mm, AND ALL MAIN LINES SHALL BE SLOPED AT 3mm PER 305mm, UNLESS OTHERWISE NOTED OR AS REQUIRED BY THE LOCAL AUTHORITY HAVING JURISDICTION.

6. THE PLUMBING CONTRACTOR SHALL BE RESPONSIBLE FOR COORDINATION WITH ALL UTILITY AUTHORITIES FOR INSTALLATION REQUIRMENTS, REGULATIONS, FEES, PERMITS, AND APPROVALS BEFORE THE START OF CONSTRUCTION.

7. THE PLUMBING CONTRACTOR SHALL ROUGH-IN AND CONNECT ALL EQUIPMENT REQUIRING WATER, WASTE, AND/OR VENT WHETHER OR NOT FURNISHED UNDER THIS CONTRACT. THE PLUMBING CONTRACTOR SHALL ALSO FURNISH AND INSTALL ALL NECESSARY PIPE, FITTINGS, VALVES, TRAPS, ETC., REQUIRED FOR A COMPLETE INSTALLATION, LEAVING SAME READY FOR SERVICE.

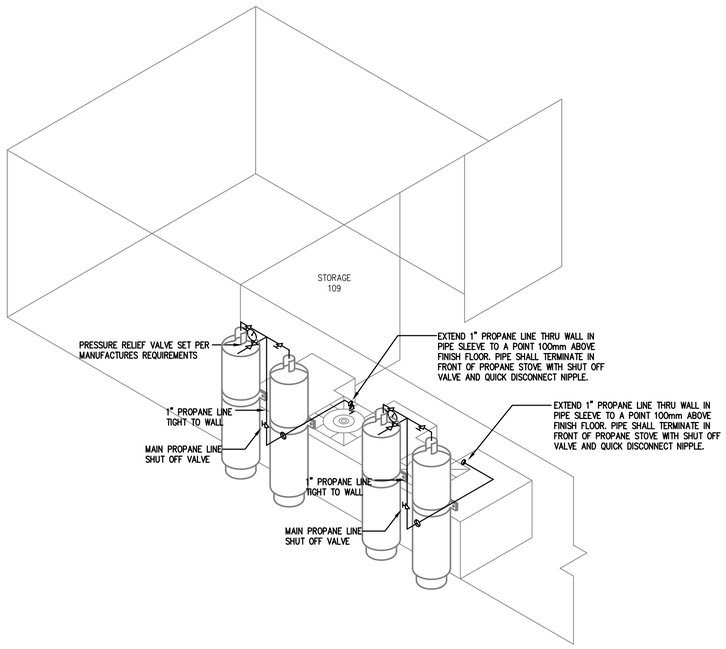

PROPANE PIPING ISOMETRIC
N.T.S.

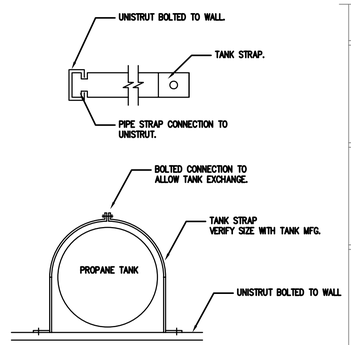

PROPANE TANK SUPPORT
N.T.S.

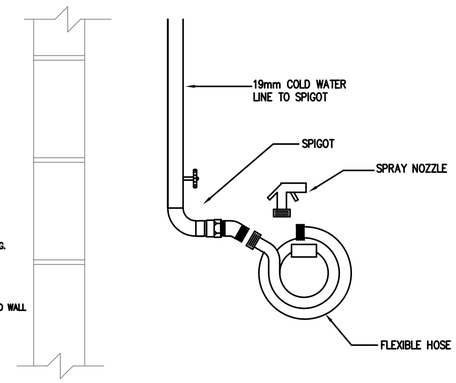

TYPICAL DETAIL – SPIGOT, FLEXIBLE HOSE, AND SPRAY NOZZLE
NO SCALE

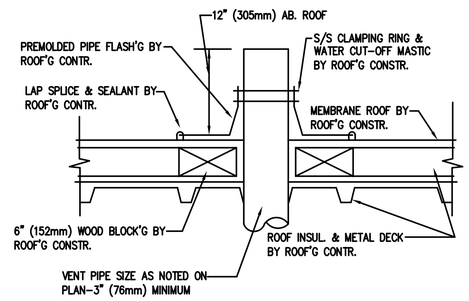

TYPICAL DETAIL – VENT THRU ROOF
NO SCALE

US Army Corps of Engineers
Afghanistan Engineer District

SYMBOL	DESCRIPTION	DATE	APR

DESIGNED BY: RMH
DWN BY: RMH
CHK BY: CJM III
DATE: 09-30-09
SUBMITTED BY: BAKER
FILE NO.: ANPSDP-504XXX

Michael Baker Jr., Inc
A unit of Michael Baker Corporation
Airside Business Park
100 Airside Drive
Moon Township, PA 15108
www.mbakercorp.com

AFGHAN NATIONAL POLICE
STANDARD DESIGN
DINING FACILITIES BUILDING (559 GSM)
WOOD FIRED HEAT OPTION

PLUMBING SYMBOLS & ABBREVIATIONS, ISOMETRICS, SCHEMATICS & DETAILS

SHEET REFERENCE NUMBER:
P4

100% SUBMISSION

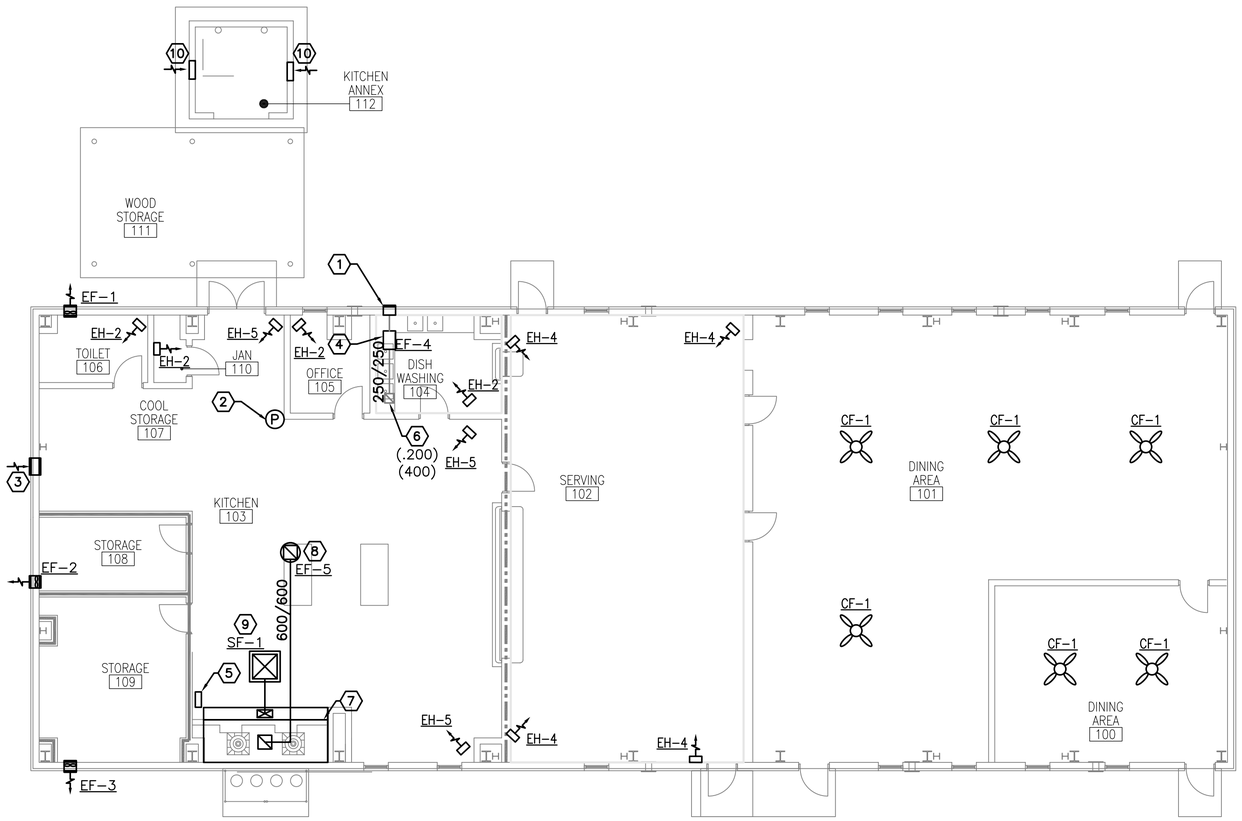

FLOOR PLAN - HVAC

1 M1 M1

SCALE: 1:100

NUMBERED NOTE:

1. WALL CAP PER FAN MFG.
2. HOOD FIRE SUPRESSION SYSTEM.
3. 400X400 (16X16) LOW LEAKAGE GRAVITY WALL LOUVER FOR INTAKE RELIEF AIR. PROVIDE WEATHERPROOF LOUVER W/ 50mm (2") WASH DOWN FILTER AND SAND TRAP.
4. INLINE EXHAUST FAN, SECURED TO STRUCTURE ABOVE WITH SPRING ISOLATORS, DUCTED TO WALL CAP.
5. REMOTE PULL STATION FOR HOOD FIRE SUPRESSION SYSTEM.
6. 250x250 (10x10) EGC, BALANCE TO CMS (CFM) IN PARENTHESIS.
7. 4M LONG UL RATED KITCHEN HOOD WITH UPBLAST EXHAUST FAN AND MAKE UP AIR FAN. HOOD SUPPLIED AND INSTALLED BY MC. SEE DETAILS ON M2. ALL FINAL ELECTRICAL CONNECTIONS SHALL BE BY E.C.
8. UPBLAST EXHAUST FAN CONNECTED TO HOOD DUCT AS REQUIRED. FAN SHALL SET LEVEL ON ROOF CURB. SEE DETAILS ON M2. ALL FINAL ELECTRICAL CONNECTIONS SHALL BE BY E.C.
9. FILTERED SUPPLY FAN SET LEVEL ON ROOF CURB. PROVIDE 500x500 DUCT DOWN TO FACE SUPPLY ON HOOD. MAINTAIN MIN. 3.1M BETWEEN EXHAUST AND INTAKE FANS. SEE DETAILS ON M2. ALL FINAL ELECTRICAL CONNECTIONS SHALL BE BY E.C.
10. 600X600 (24X24) WALL LOUVER, VERIFY LOCATION WITH ARCHITECTURAL DRAWINGS.

GENERAL NOTES:

1. DO NOT SCALE DRAWINGS – ALL DIMENSIONS AND CONDITIONS SHALL BE CHECKED AND VERIFIED BY THE CONTRACTOR AT THE SITE.
2. ALL WORK PERFORMED ON THIS BUILDING SHALL BE IN COMPLIANCE WITH ALL PERTINENT CODES, RULES, ORDINANCES AND REGULATIONS OF THE GOVERNING AUTHORITIES.
3. ALL WORK PERFORMED UNDER AND IN CONNECTION WITH THESE DRAWINGS AND SPECIFICATIONS SHALL BE IN STRICT COMPLIANCE WITH THE LATEST SAFETY AND HEALTH STANDARDS.

SYMBOLS:

- (X) KEY NOTE
- (.050) AIR VOLUME IN CUBIC METERS PER SECOND (CMS)
- FD FIRE DAMPER
- EXHAUST AIR GRILLE

FAN SCHEDULE

NO.	TYPE	FAN CMS	DRIVE	HP	SP mmH20	ELECT. CHAR.	SWITCH
EF-1	WALL	0.050	DIRECT	FRACT	13	220/1/50	@ WALL
EF-2	WALL	0.050	DIRECT	FRACT	13	220/1/50	@ WALL
EF-3	WALL	0.050	DIRECT	FRACT	13	220/1/50	@ WALL
EF-4	INLINE	0.200	DIRECT	FRACT	13	220/1/50	@ WALL
EF-5	UPBLAST	2.500	DIRECT	2	25	220/1/50	@ HOOD
SF-1	SUPPLY	2.400	DIRECT	2	13	220/1/50	@ HOOD

NOTE:
1. EF-2 SHALL BE EXPLOSION PROOF.
2. INLINE FANS SHALL BE SURFACE MOUNTED WITH SPRING ISOLATORS.
3. ALL FINAL ELECTRICAL CONNECTIONS ARE BY THE ELECTRICAL CONTRACTOR.

ELECTRIC UNIT HEATER SCHEDULE

NO.	CMS	KW	F.A.T. °C	ELECT. CHAR.	MOUNTING
EH-2	.200	2.6	38	370/1/50	WALL HUNG
EH-4	.200	4	38	370/1/50	WALL HUNG
EH-5	.200	5	38	370/1/50	WALL HUNG

NOTES:
1. UNIT HEATERS SHALL BE MOUNTED FROM STRUCTURE ABOVE.
2. UNIT HEATERS SHALL HAVE TAMPER PROOF INTEGRAL STATS.

CEILING FAN

NO.	BLADE SIZE mm	BLADE SIZE IN	VOLTAGE	SWITCH
CF-1	1320	52	220/1/50	@ WALL

NOTES:
1. FINAL ELECTRICAL CONNECTIONS BY EC.

US Army Corps of Engineers
Afghanistan Engineer District

SYMBOL	DESCRIPTION	DATE	APR

DESIGNED BY: RML
DATE: 09-30-09
DWN BY: JJN
SUBMITTED BY: BAKER
CHK BY: CJM
FILE NO.: ANPSDM-101XXX

Michael Baker Jr., Inc
A unit of Michael Baker Corporation
Airside Business Park
100 Airside Drive
Moon Township, PA 15108
www.mbakercorp.com

AFGHAN NATIONAL POLICE
STANDARD DESIGN
DINING FACILITIES BUILDING (559 GSM)
WOOD FIRED HEAT OPTION

HVAC FLOOR PLAN

SHEET REFERENCE NUMBER:
M1

100% SUBMISSION

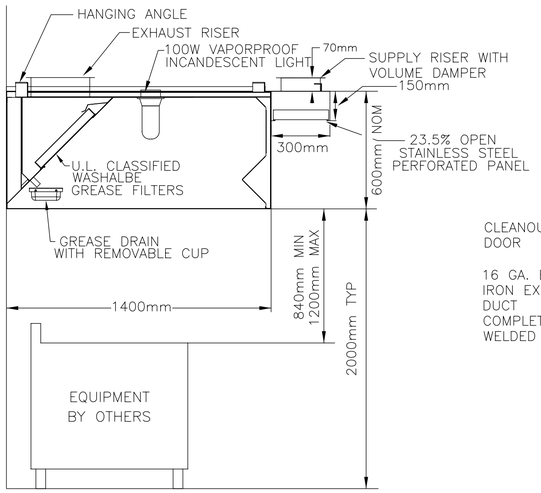

KITCHEN HOOD SECTION

N.T.S.

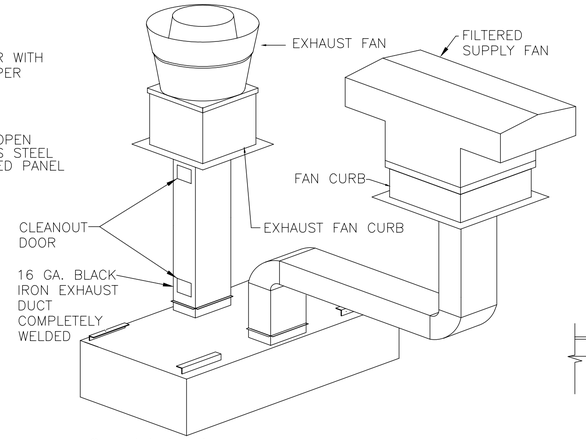

Correct Installation
1. EXHAUST DUCT STRAIGHT UP
   (IF DUCT CANNOT GO STRAIGHT UP USE OFFSETS)
2. FIRST ELBOW AT LEAST 450MM ABOVE HOOD
3. AT LEAST 1.2M BETWEEN ELBOWS
4. USE RADIUS BACK ELBOWS ONLY
5. DO NOT USE FLEXIBLE SUPPLY DUCTWORK.
6. INSULATE SUPPLY AND EXHAUST DUCTS.

KITCHEN HOOD DUCT DETAIL

N.T.S.

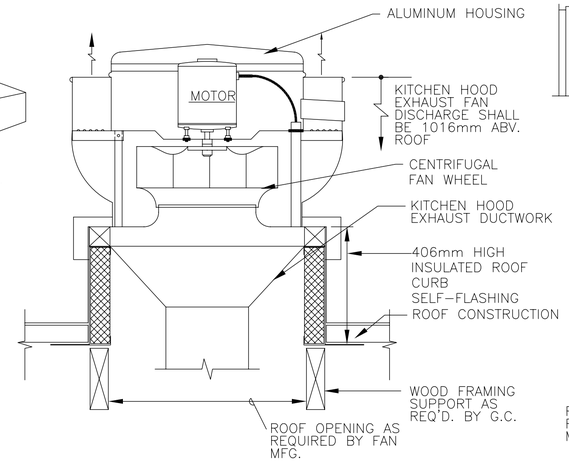

KITCHEN ROOF EXHAUST FAN

N.T.S.

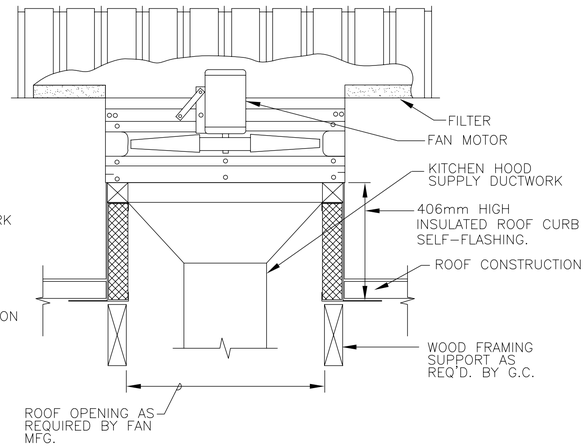

FILTERED SUPPLY FAN

N.T.S.

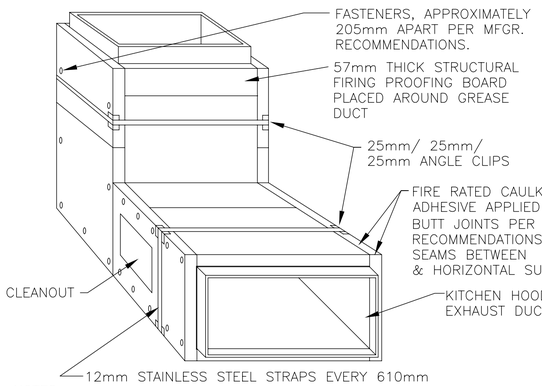

NOTES:
1. WHEN INSTALLING CLEANOUT DOOR COVER, USE REMOVABLE STAINLESS STEEL BANDS AT 305mm O.C. MAXIMUM (2 BANDS MINIMUM).
2. DUCT SYSTEM SHALL BE SLOPED PER NFPA REGULATIONS.
3. DUCT HANGERS AND SUPPORTS FOR HORIZONTAL & VERTICAL RUNS SHALL BE DESIGNED TO PROVIDE ADEQUATE SUPPORT FOR THE DUCT AND ENCLOSURE ACCORDING TO REQUIREMENTS OF THE BUILDING & MECHANICAL CODES.
4. LABELS SHALL BE PROVIDED BY THE ENCLOSURE MANUFACTURER AND BE PLACED ADJACENT TO ALL CLEANOUT OPENINGS WHICH STATE THAT COVER MUST BE REPLACED USING REMOVABLE STAINLESS STEEL BANDS AT 305mm O.C. MAXIMUM (2 BANDS MINIMUM).
5. DUCT AND ENCLOSURE SHALL BE SUPPORTED BY HANGERS FROM BUILDING STRUCTURAL STEEL. MAXIMUM DISTANCE BETWEEN SUPPORTS SHALL BE 1220mm.
6. PROVIDE 40mm GREASE DUCT INSULATION ON ALL KITCHEN EXHAUST DUCTS.

KITCHEN HOOD EXHAUST DUCT

N.T.S.

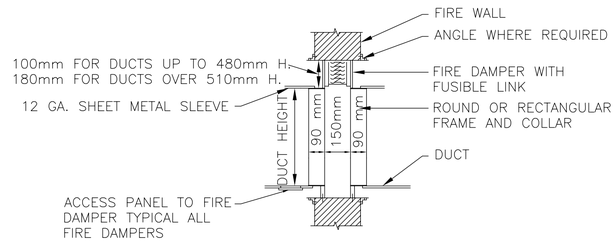

FIRE DAMPER DETAIL

N.T.S.

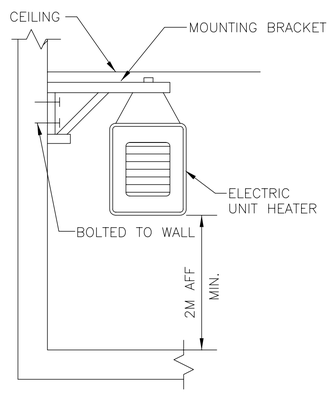

ELECTRIC UNIT HEATER MOUNTING

N.T.S.

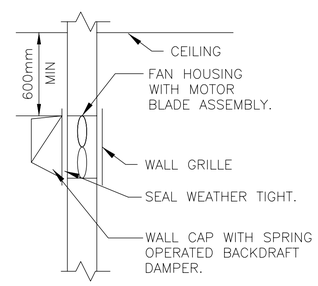

WALL MOUNTED EXHAUST FAN DETAIL

N.T.S.

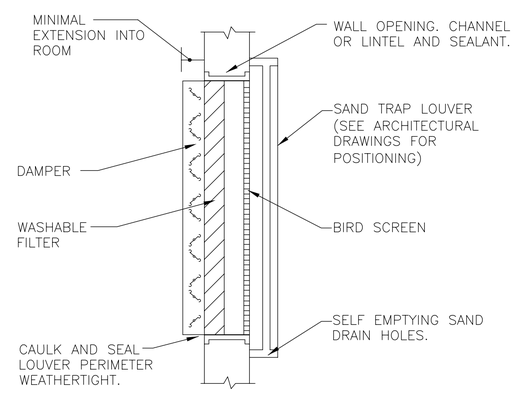

FILTERED SAND TRAP LOUVER

N.T.S.

US Army Corps of Engineers
Afghanistan Engineer District

SYMBOL	DESCRIPTION	DATE	APR

DESIGNED BY: RML	DATE: 09-30-09		
DWN BY: JJN	SUBMITTED BY: BAKER		
CHK BY: CJM	FILE NO.: ANPSDM-502XXX		

Michael Baker Jr., Inc.
A unit of Michael Baker Corporation
Airside Business Park
100 Airside Drive
Moon Township, PA 15108
www.mbakercorp.com

AFGHAN NATIONAL POLICE
STANDARD DESIGN
DINING FACILITIES BUILDING (559 GSM)
WOOD FIRED HEAT OPTION

HVAC DETAILS

SHEET REFERENCE NUMBER:
M2

100% SUBMISSION

POWER

- DISTRIBUTION PANELBOARD
- NEW PANELBOARD – SURFACE
- NEW PANELBOARD – RECESSED
- EXISTING PANELBOARD
- GENERATOR
- TVSS — TRANSIENT VOLTAGE SURGE SURPRESSOR
- TRANSFORMER (DRAWN TO SIZE)
- PS — POWER SUPPLY
- CP — CONTROL PANEL
- TC — TIME CLOCK
- TIM — ASTRONOMICAL TIME CLOCK– "SEE SPEC."
- R — RELAY WITH RATING AND NUMBER OF POLES AS NOTED ON DRAWINGS– "SEE SPEC."
- J — JUNCTION BOX
- J — JUNCTION BOX – CEILING
- PB — PULL BOX
- BD — BUS DUCT HORIZONTAL
- BUS DUCT VERTICAL
- EMERGENCY POWER OFF PUSH BUTTON
- NON–FUSIBLE SAFETY SWITCH
- FUSIBLE SAFETY SWITCH
- M — MOTOR
- $M — MOTOR STARTING SWITCH – 20A RATED
- $K — KEY SWITCH – 20A RATED
- FC — FAN COIL – FURNISHED BY MECHANICAL CONTRACTOR, ELECTRICAL CONTRACTOR SHALL INSTALL AND PROVIDE POWER CONNECTION
- UH — UNIT HEATER – FURNISHED BY MECHANICAL CONTRACTOR, ELECTRICAL CONTRACTOR SHALL INSTALL AND PROVIDE POWER CONNECTION
- D — JUNCTION BOX FOR CONNECTION TO GARBAGE DISPOSAL
- CF — LIGHT/HEATER/FAN – FURNISHED BY MECHANICAL CONTRACTOR, ELECTRICAL CONTRACTOR SHALL INSTALL AND PROVIDE POWER CONNECTION
- ELECTRIC WATER HEATER
- EPO — WEATHERPROOF / EXPLOSION PROOF EMERGENCY POWER OFF PUSH–BUTTON TO BE INTERCONNECTED WITH GENERATOR SHUT DOWN CONTROL
- CF — CEILING FAN – REFER TO SPECIFICATION SECTION 26 20 00

RECEPTACLES

- DUPLEX 20A BRITISH STANDARD UNSWITCHED SOCKETS
- GF — DUPLEX 20A BRITISH STANDARD UNSWITCHED SOCKETS – 10mA GROUND FAULT INTERRUPTER TYPE
- WP — DUPLEX 20A BRITISH STANDARD UNSWITCHED SOCKETS – 10mA GROUND FAULT INTERRUPTER TYPE WITH WEATHERPROOF COVER
- EXP — DUPLEX 20A BRITISH STANDARD UNSWITCHED SOCKETS – EXPLOSION PROOF
- * — INDICATES MOUNT DEVICE ABOVE COUNTER TOP

LIGHTNING PROTECTION

- AIR TERMINAL 20mm O.D. X 4m SOLID COPPER, NICKEL PLATED ON ADHESIVE BASE.
- EQ — EQUIPMENT AIR TERMINAL
- TEST WELL WITH GROUND ROD(S)
- GROUND ROD
- G — GROUND PLATE
- G — MAIN GROUND CONDUCTER CONCEALED WITHIN CONSTRUCTION
- G — MAIN GROUND CONDUCTOR EXPOSED ON EXPOSED ON BUILDING EXTERIOR SURFACE
- G — GROUND CONDUCTOR CAD WELDED TO GROUND CABLE OR EQUIPMENT
- G — GROUND CONDUCTOR CAD WELDED TO BUILDING STEEL COLUMN
- GROUND ROD TRIPOD, SPACED 10 FEET APART.
- LEVEL TO LEVEL CABLE

LIGHTING

- LIGHTING FIXTURE – SEE FIXTURE SCHEDULE FOR MORE INFORMATION
- LIGHTING FIXTURE – SEE FIXTURE SCHEDULE FOR MORE INFORMATION
- DOWNLIGHT
- LIGHTING FIXTURE ON NORMAL/EMERGENCY
- WALL MOUNTED LIGHT FIXTURE
- E — EXIT SIGN – DIRECTIONAL ARROWS AS INDICATED ON DRAWINGS
- B — BATTERY PACK WITH HEADS AS INDICATED ON DRAWINGS
- REMOTE HEAD FOR BATTERY PACK
- $ — SINGLE POLE SWITCH – 20A RATED
- $3 — 3–WAY SWITCH – 20A RATED
- $4 — 4–WAY SWITCH – 20A RATED
- PC — PHOTOCELL VOLTAGE TO MATCH CIRCUITRY
- LC — LIGHTING CONTACTOR
- POLE MOUNTED SITE LIGHTING FIXTURE– NUMBER OF FIXTURES PER POLE AS INDICATED ON DRAWINGS
- EXTERIOR DIRECTIONAL LIGHTING FIXTURE
- a — SMALL CASE LETTERS REPRESENTS LAMP(S) / SWITCHES. WHEN USED WITH AN OCCUPANCY SENSOR THIS INDICATES SENSOR WITH MANUAL OVERRIDE SWITCH

TELECOMMUNICATIONS

- TELEPHONE OUTLET(S) @ 18" AFF. U.N.O. WITH 3/4" RACEWAY TERMINATED ABOVE NEAREST ACCESSIBLE CEILING OR TO TELEPHONE TERMINAL BOARD IF NO ACCESSIBLE CEILING AVAILABLE. SEE TELE/DATA RISER DIAGRAM FOR OUTLET AND CABLE DESCRIPTION
- DATA OUTLET(S) @ 18" AFF. U.N.O. WITH 3/4" RACEWAY TERMINATED ABOVE NEAREST ACCESSIBLE CEILING OR TO DATA EQUIPMENT RACK IF NO ACCESSIBLE CEILING AVAILABLE. SEE TELE/DATA RISER DIAGRAM FOR OUTLET AND CABLE DESCRIPTION

TELECOMMUNICATIONS (CONTINUED)

- COMBINATION TELEPHONE/DATA OUTLET(S) @ 18" AFF. U.N.O. WITH 1" RACEWAY TERMINATED ABOVE NEAREST ACCESSIBLE CEILING OR TO TELE/DATA TERMINAL AREA IF NO ACCESSIBLE CEILING AVAILABLE. SEE TELE/DATA RISER DIAGRAM FOR OUTLET AND CABLE DESCRIPTION
- W — WALL MTD. TELEPHONE OUTLET WITH 3/4" RACEWAY TERMINATED ABOVE NEAREST ACCESSIBLE CEILING OR TO TELEPHONE TERMINAL BOARD IF NO ACCESSIBLE CEILING AVAILABLE. SEE TELE/DATA RISER DIAGRAM FOR OUTLET AND CABLE DESCRIPTION
- (x)T — INDICATES NUMBER OF TELEPHONE OUTLET(S) AND ASSOCIATED CABLING
- (x)D — INDICATES NUMBER OF DATA OUTLET(S) AND ASSOCIATED CABLING
- (x)TF — INDICATES NUMBER OF TELEPHONE OUTLETS AND ASSOCIATED CABLING WITH 1 OUTLET AND CABLE DEDICATED FOR FAX

SINGLE LINE SYMBOLS

- SWITCH
- BREAKER
- FUSE
- TRANSFORMER
- CAPACITOR
- GROUND
- CONTACT (NORMALLY OPEN)
- CONTACT (NORMALLY CLOSED)
- AUTOMATIC TRANSFER SWITCH
- MANUAL DOUBLE THROW SWITCH
- CURRENT TRANSFORMER
- INDICATES NEW ELECTRICAL EQUIPMENT
- C — INDICATES NEW CONTROL WIRING AND CONDUIT
- EQUIPMENT OUTLINE

MISCELLANEOUS

- BRANCH CIRCUIT WIRING CONCEALED ABOVE CEILINGS, SURFACE MOUNTED ON WALLS
- BRANCH CIRCUIT WIRING – #10 AWG
- BRANCH CIRCUIT WIRING – UNDER FLOOR
- HOME RUN BACK TO PANEL
- CONDUIT TURNED DOWN
- CONDUIT TURNED UP
- LV — LOW VOLTAGE WIRING AND CONDUIT
- CT–X — CABLE TRAY ("X" DENOTES WIDTH)
- INDICATES CONTINUATION OF LINE

FIRE ALARM

- FACP — FIRE ALARM CONTROL PANEL WITH BATTERY BACKUP
- F — FIRE ALARM PULL STATION

FIRE ALARM (CONTINUED)

- F — FIRE ALARM STROBE – WALL MOUNTED
- F — FIRE ALARM AUDIBLE/STROBE – WM
- F — FIRE ALARM HORN/STROBE – WM
- S — SMOKE DETECTOR
- H — HEAT DETECTOR CEILING MOUNTED
- D — DUCT DETECTOR – PROVIDED BY EC, INSTALLED BY MC AND CONNECTED BY EC

DENOTATIONS & ABBREVIATIONS

AFF	ABOVE FINISHED FLOOR
C	CEILING MOUNTED
E	EMERGENCY
EC	ELECTRICAL CONTRACTOR
EPO	EMERGENCY POWER OFF
EXP	EXPLOSION PROOF
F	FIRE ALARM
FF	FLUSH FLOOR MOUNTED
FL	FLUORESCENT
FO	FIBER OPTIC
FSS	FUSED SAFETY SWITCH
G	GROUND FAULT INTERRUPTER
GC	GENERAL CONTRACTOR
HOA	HAND–OFF AUTO
I	INFRARED
ICD	INCANDESCENT
IG	ISOLATED GROUND
K	KEY
LV	LOW VOLTAGE
M	MOTOR
MC	MECHANICAL CONTRACTOR
NE	NORMAL/EMERGENCY
NFSS	NON–FUSED SAFETY SWITCH
PA	PAGING SYSTEM
PLC	PLUMBING CONTRACTOR
REL	RELOCATE
RED	RELOCATED
SL	SINGLE LINE
SS	SURGE SUPPRESSION
T	TELEPHONE
TL	TWIST LOCK

DENOTATIONS & ABBREVIATIONS (CONT.)

TP	TAMPER PROOF
UE	UNDERGROUND ELECTRIC
UF	UNDERGROUND FIBER
UT	UNDERGROUND TELEPHONE
W	WALL MOUNTED
WG	WIRE GUARD
WP	WEATHERPROOF
WPG	WEATHERPROOF/GROUND FAULT INTERRUPTER
WT	WATER TIGHT

GENERAL PROJECT NOTES:

G1. UNLESS OTHERWISE NOTED, PROVIDE ALL EQUIPMENT SHOWN ON THE PLANS. THE ELECTRICAL CONTRACTOR SHALL COORDINATE ALL SYMBOLS SHOWN ON THE PLANS WITH THE SYMBOL LIST. IT SHALL BE THE RESPONSIBILITY OF THE CONTRACTOR TO VERIFY THE INTENT OF ANY SYMBOL THAT IS SHOWN ON THE PLANS AND NOT INDICATED ON THE SYMBOL LIST WITH THE ENGINEER PRIOR TO BID.

G2. COORDINATE THE FINAL LOCATIONS OF ALL LIGHT FIXTURES WITH THE ARCHITECT'S REFLECTED CEILING PLANS. REPORT ANY DISCREPANCIES TO THE ARCHITECT PRIOR TO INSTALLATION.

G3. THE CONTRACTOR SHALL VERIFY THE LOCATION OF ALL UNDERGROUND UTILITIES WITHIN THE CONSTRUCTION AREA THREE (3) WORKING DAYS NOTICE BEFORE COMMENCE DIGGING. NOTIFY THE LOCAL OR STATE AUTHORITY HAVING JURISDICTION AND WAIT THE REQUIRED TIME BEFORE COMMENCING TO DIG.

G4. THE CONTRACTOR SHALL COORDINATE CONDUIT RUNS, CABLE TRAY, LIGHTING FIXTURES AND OTHER EQUIPMENT LOCATIONS WITH THE OTHER TRADE CONTRACTORS TO AVOID CONFLICTS.

G5. WHERE VOLTAGES AND FREQUENCIES ON THE DRAWINGS AND IN THE SPECIFICATIONS DIFFER FROM THE LOCAL ONES, ALL WORK SHALL BE PERFORMED USING THE LOCAL VOLTAGES AND FREQUENCIES.

G6. THE MINIMUM WIRE SIZE ON THE PROJECT SHALL BE 4mm2. THE MINIMUM CONDUIT SIZE SHALL BE 20mm. THE MINIMUM BREAKER SIZE SHALL BE 20 AMPS.

G7. THE CONTRACTOR SHALL PUT A MAXIMUM OF 6 DUPLEX SOCKETS ON A 20A SINGLE POLE CIRCUIT.

G8. WHERE THE 1010 SCOPE REVIEW, 1015 TECHNICAL REVIEW, DRAWINGS, AND SPECIFICATIONS DIFFER FROM AMERICAN CODES OR STANDARDS THE 1010, 1015, DRAWINGS, AND SPECIFICATIONS SHALL RULE.

G9. WORK FOR THE AMMUNITION SUPPLY POINT SHALL BE DONE IN ACCORDANCE WITH DEPARTMENT OF DEFENSE STANDARD DOD 6055.9–STD.

G10. ALL CONDUIT AND DEVICES SHALL BE SURFACE MOUNTED UNLESS OTHERWISE INDICATED.

US Army Corps of Engineers
Afghanistan Engineer District

SYMBOL	DESCRIPTION	DATE	APR

DESIGNED BY: JRG
DWN BY: JRG
CHK BY: JRG
DATE: 09–30–09
SUBMITTED BY: BAKER
FILE NO.: ANPSDE–000XXX

Michael Baker Jr., Inc.
A unit of Michael Baker Corporation
Airside Business Park
100 Airside Drive
Moon Township, PA 15108
www.mbakercorp.com

AFGHAN NATIONAL POLICE
STANDARD DESIGN
DINING FACILITIES BUILDING (559 GSM)
WOOD FIRED HEAT OPTION

ELECTRICAL SYMBOLS AND ABBREVIATIONS

SHEET REFERENCE NUMBER:
E0

100% SUBMISSION

GENERAL NOTES:

1. REFER TO DRAWING #E0 FOR THE ELECTRICAL SYMBOLS LIST.
2. EXIT SIGNS SHALL BE WIRED AHEAD OF ANY LOCAL SWITCHING ON CIRCUITS.
3. REFER TO DRAWING #E7 FOR THE LIGHTING FIXTURE SCHEDULE.
4. REFER TO DRAWING #E6 FOR THE POWER RISER.
5. REFER TO DRAWING #E8 FOR PANEL SCHEDULES.
6. LIGHT FIXTURES INDICATED AS EMERGENCY SHALL BE PROVIDED WITH A BATTERY BACKUP BALLAST.

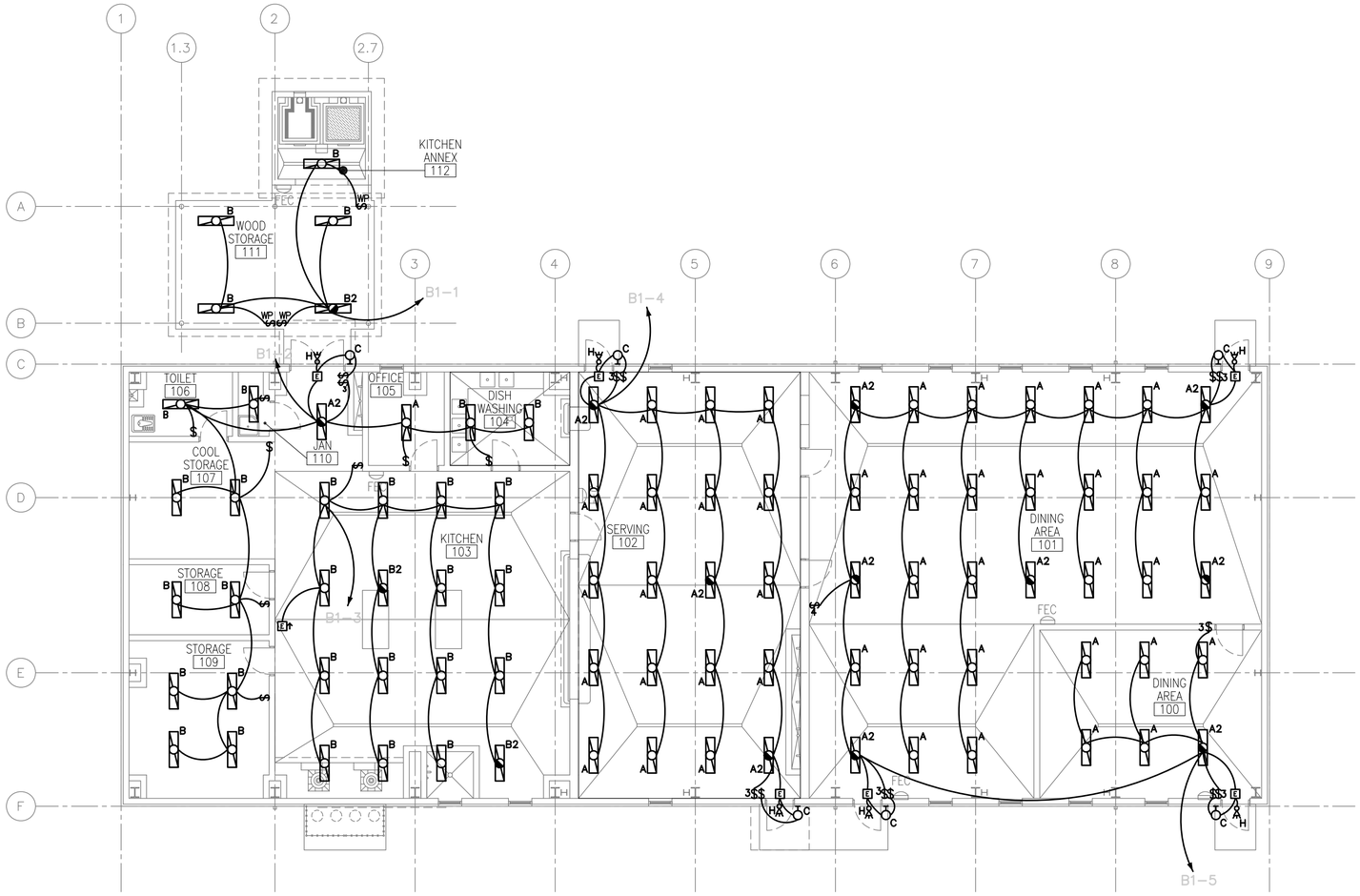

1 / E1 E1 LIGHTING PLAN

SCALE: 1:100

UNLESS OTHERWISE NOTED, LINEAR DIMENSIONS SHOWN ARE IN MILLIMETERS (MM)

1 0 1 2 3 4 5 6 7 8 9

1:100

US Army Corps of Engineers

Afghanistan Engineer District

SYMBOL	DESCRIPTION	DATE	APR

DATE:	09-30-09
SUBMITTED BY:	BAKER
FILE NO.:	ANPSDE-101XXX
DESIGNED BY:	JRG
DWN BY:	JRG
CHK BY:	JRG

Michael Baker Jr., Inc
A unit of Michael Baker Corporation
Airside Business Park
100 Airside Drive
Moon Township, PA 15108
www.mbakercorp.com

AFGHAN NATIONAL POLICE
STANDARD DESIGN
DINING FACILITIES BUILDING (559 GSM)
WOOD FIRED HEAT OPTION

LIGHTING PLAN

SHEET REFERENCE NUMBER:

E1

100% SUBMISSION

GENERAL NOTES:

1. REFER TO DRAWING #E0 FOR THE ELECTRICAL SYMBOLS LIST.
2. REFER TO DRAWING #E6 FOR THE POWER RISER.
3. REFER TO DRAWING #E8 FOR PANEL SCHEDULES.
4. COORDINATE EXACT MOUNTING LOCATION OF DISCONNECTING MEANS FOR MECHANICAL AND PLUMBING EQUIPMENT IN THE FIELD.
5. FUSIBLE SAFETY SWITCHES THAT ARE NOT OTHERWISE IDENTIFIED SHALL BE 380V, 1P, 30A FUSED SAFETY SWITCHES WITH 20A FUSES.

NUMBERED NOTE:

1. PROVIDE POWER CONNECTION TO EXHAUST FAN #1. SEE DRAWINGS #E5 AND #M1 FOR MORE INFORMATION.
2. PROVIDE POWER CONNECTION TO ELECTRIC UNIT HEATER #2. SEE DRAWINGS #E5 AND #M1 FOR MORE INFORMATION.
3. PROVIDE POWER CONNECTION TO EXHAUST FAN #4. SEE DRAWINGS #E5 AND #M1 FOR MORE INFORMATION.
4. PROVIDE POWER CONNECTION TO ELECTRIC UNIT HEATER #5. SEE DRAWINGS #E5 AND #M1 FOR MORE INFORMATION.
5. PROVIDE POWER CONNECTION TO ELECTRIC HEATER #4. SEE DRAWINGS #E5 AND #M1 FOR MORE INFORMATION.
6. PROVIDE POWER CONNECTION TO EXHAUST FAN #3. SEE DRAWINGS #E5 AND #M1 FOR MORE INFORMATION.
7. PROVIDE POWER CONNECTION TO SUPPLY FAN #1. SEE DRAWINGS #E5 AND #M1 FOR MORE INFORMATION.
8. PROVIDE POWER CONNECTION TO EXHAUST FAN #2. SEE DRAWINGS #E5 AND #M1 FOR MORE INFORMATION.

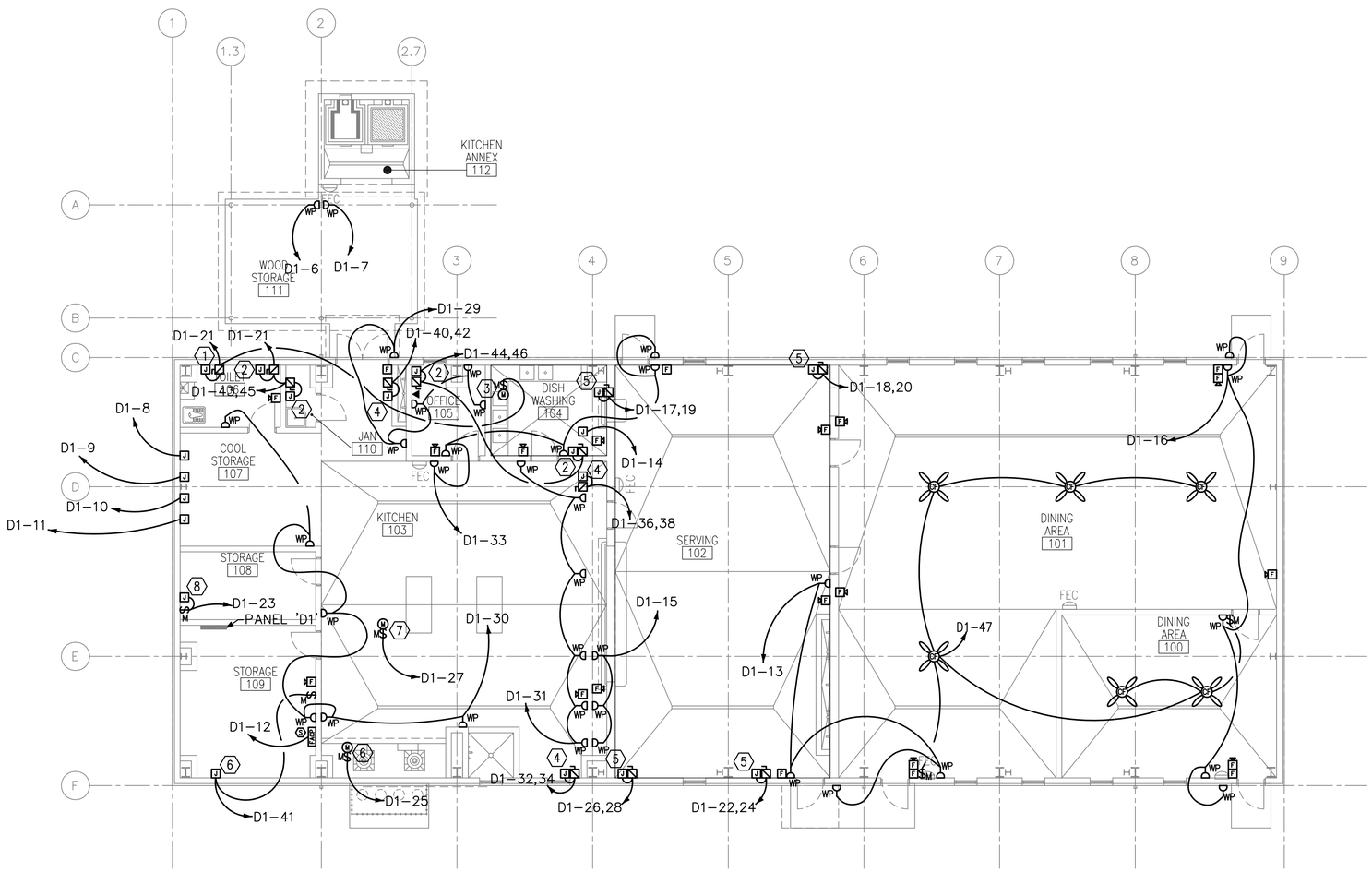

1 / E2 E2 POWER AND SYSTEMS PLAN

SCALE: 1:100

UNLESS OTHERWISE NOTED, LINEAR DIMENSIONS SHOWN ARE IN MILLIMETERS (MM)

1 0 1 2 3 4 5 6 7 8 9

1:100

US Army Corps of Engineers

Afghanistan Engineer District

SYMBOL	DESCRIPTION	DATE	APR

DATE:	09-30-09
SUBMITTED BY:	BAKER
FILE NO.:	ANPSDE-102XXX
DESIGNED BY:	JRG
DWN BY:	JRG
CHK BY:	JRG

Michael Baker Jr., Inc
A unit of Michael Baker Corporation
Airside Business Park
100 Airside Drive
Moon Township, PA 15108
www.mbakercorp.com

AFGHAN NATIONAL POLICE
STANDARD DESIGN
DINING FACILITIES BUILDING (559 GSM)
WOOD FIRED HEAT OPTION

POWER AND SYSTEMS PLAN

SHEET REFERENCE NUMBER:

E2

100% SUBMISSION

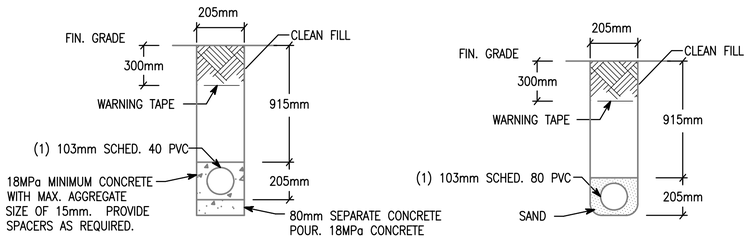

NOTE: PVC CONDUIT SHALL BE DIRECT BURIED SCHEDULE 80 FOR NO TRAFFIC AREAS AND CONCRETE-ENCASED SCHEDULE 40 FOR UNDER ROADWAYS OR TRAFFIC AREAS.

1 / E5 E3 TYPICAL DUCT BANK DETAILS FOR CONDUIT IN SAND OR CONCRETE

SCALE: N.T.S.

N

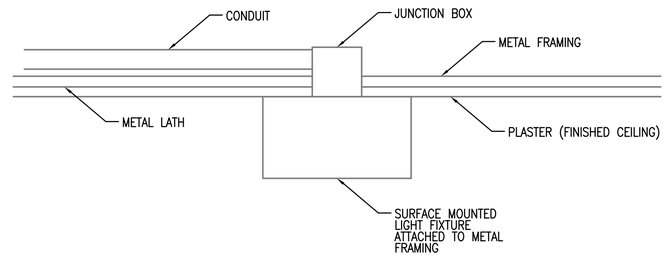

2 / E3 E3 TYPICAL DETAIL FOR SURFACE MOUNTED LIGHT FIXTURES

SCALE: N.T.S.

N

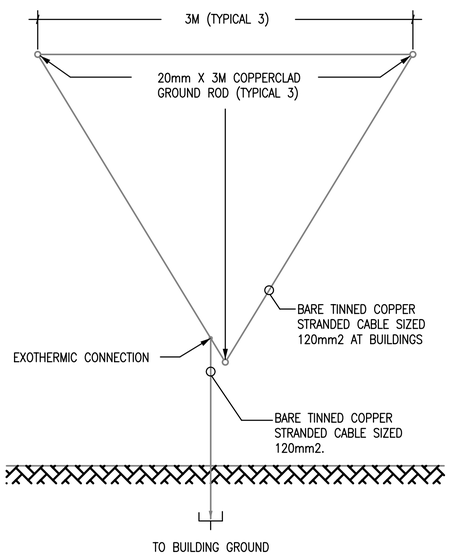

3 / E3 E3 GROUND TRIPOD SYSTEM DETAIL - PLAN

SCALE: N.T.S.

N

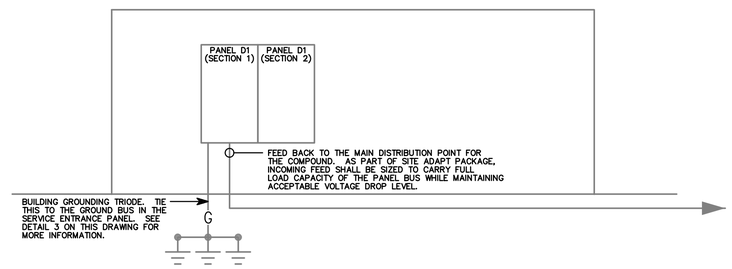

4 / E3 E3 D.2 RISER DIAGRAM

SCALE: N.T.S.

N

US Army Corps of Engineers

Afghanistan Engineer District

SYMBOL	DESCRIPTION	DATE	APR

DESIGNED BY: JRG
DATE: 09-30-09
DWN BY: JRG
SUBMITTED BY: BAKER
CHK BY: JRG
FILE NO.: ANPSDE-503XXX

Michael Baker Jr., Inc
A unit of Michael Baker Corporation
Airside Business Park
100 Airside Drive
Moon Township, PA 15108
www.mbakercorp.com

AFGHAN NATIONAL POLICE
STANDARD DESIGN
DINING FACILITIES BUILDING (559 GSM)
WOOD FIRED HEAT OPTION

DETAILS

SHEET REFERENCE NUMBER:

E3

100% SUBMISSION

FIXTURE MARK 'A'

PARABOLIC SURFACE/PENDANT MOUNTED 300MM x 1200MM FLUORESCET FIXTURE WITH ELECTRONIC BALLAST.

FIXTURE MARK 'A2':
SAME FIXTURE AS 'A' WITH EMERGENCY BALLAST.

FIXTURE MARK 'B'

WET LOCATION WRAP AROUND SURFACE/PENDANT MOUNTED FLUORESCENT FIXTURE WITH PRISMATIC ACRYLIC LENS AND ELECTRONIC BALLAST.

FIXTURE MARK 'B2':
SAME FIXTURE AS 'B' WITH EMERGENCY BALLAST.

FIXTURE MARK 'C'

INCANDESCENT ONE PIECE WITH APPROVED LENS, STABILIZED HIGH IMPACT POLY CARBONATE

FIXTURE MARK 'H'

REMOTE HEAD EXTERIOR LIGHT HEAD POWERED FROM EXIT SIGN BATTERY– 12V DOUBLE HEAD CORROSION RESISTANT WITH UL34 WEATHERPROOF CONSTRUCTION

FIXTURE MARK 'E'

UNIVERSAL MOUNT ENGINEER GRADE THERMOPLASTIC HOUSING EXIT SIGN WITH LED LAMPS, RED LETTERS 6" IN HEIGHT WITH ARROWS AS INDICATED, WITH 12V CADMIUM BATTERY

FIXTURE MARK 'J'

EXPLOSION–PROOF (2) LAMP FIXTURE PROVIDED WITH LAMPS. COPPER FREE, ALUMINUM HOUSING, TEMPERED BOROSILICATE GLASS, AND BIAX LAMPS WITH WIRE GUARD

LIGHTING FIXTURE SCHEDULE

FIXTURE MARK	STYLE NUMBER AND TYPE	NUMBER AND TYPE OF LAMPS	VOLTAGE	MOUNTING	NOTES
A	PARABOLIC SURFACE/PENDANT MOUNTED 300MM X 1200MM FLUORESCENT FIXTURE WITH ELECTRONIC BALLAST	(2) 32W 3500K	220V – 1ø 50HZ	PENDANT MOUNTED FROM SLOPED CEILINGS	FURNISHED WITH ELECTRONIC BALLAST. PARABOLIC LOUVER SHALL BE SPECULAR LENS IRADESCENCE TYPE.
A2	SAME AS FIXTURE 'A' WITH EMERGENCY BALLAST	(2) 32W 3500K	220V – 1ø 50HZ	PENDANT MOUNTED FROM SLOPED CEILINGS	FURNISHED WITH ELECTRONIC BALLAST. PARABOLIC LOUVER SHALL BE SPECULAR LENS IRADESCENCE TYPE. EMERGENCY BALLAST SELF TEST.
B	WET LOCATION WRAP AROUND SURFACE/PENDANT MOUNTED FLUORESCENT FIXTURE WITH PRISMATIC ACRYLIC LENS AND ELECTRONIC BALLAST	(2) 32W 3500K	220V – 1ø 50HZ	PENDANT MOUNTED FROM SLOPED CEILINGS	FURNISHED WITH ELECTRONIC BALLAST, VIRGIN ACRYLIC WRAP AROUND LENS.
B2	SAME AS FIXTURE 'B' WITH EMERGENCY BALLAST	(2) 32W 3500K	220V – 1ø 50HZ	PENDANT MOUNTED FROM SLOPED CEILINGS	FURNISHED WITH ELECTRONIC BALLAST, VIRGIN ACRYLIC WRAP AROUND LENS. EMERGENCY BALLAST WITH SELF TEST SWITCH.
C	INCANDESCENT ONE PIECE W/ APPROVED LENS STABILIZED HIGH IMPACT POLY CARBONATE.	(1) A19 – 100W INCANDESCENT	220V – 1ø 50HZ	WALL MOUNTED ABOVE EXTERIOR DOORS	
H	REMOTE HEAD EXTERIOR LIGHT HEAD POWERED FROM EXIT SIGN BATTERY– 12V DOUBLE HEAD CORROSION RESISTANT WITH UL34 WEATHERPROOF CONSTRUCTION	(2) 12W/12V HALOGEN LAMP	12V – 1ø 50HZ	EXTERIOR WALL MOUNTED AT TOP OF DOOR HEIGHT	
J	EXPLOSION–PROOF (2) LAMP FIXTURE PROVIDED WITH LAMPS. COPPER FREE, ALUMINUM HOUSING, TEMPERED BOROSILICATE GLASS, AND BIAX LAMPS WITH WIRE GUARD	(2) 40W 3500K BIAX FLUORESCENT LAMPS	220V – 1ø 50HZ	PENDANT MOUNTED FROM SLOPED CEILINGS	FURNISHED WITH LAMPS AND WIRE GUARD
E	UNIVERSAL MOUNT ENGINEER GRADE THERMOPLASTIC HOUSING EXIT SIGN WITH LED LAMPS, RED LETTERS 6" IN HEIGHT WITH ARROWS AS INDICATED, WITH 12V CADMIUM BATTERY WITH REMOTE HEAD CAPABILITY	LED LAMPS	220V – 1ø 50HZ	UNIVERSAL MOUNTING	

US Army Corps of Engineers
Afghanistan Engineer District

SYMBOL	DESCRIPTION	DATE	APR

DESIGNED BY: JRG
DATE: 09–30–09
DWN BY: JRG
SUBMITTED BY: BAKER
CHK BY: JRG
FILE NO.: ANPSDE–604XXX

Michael Baker Jr., Inc
A unit of Michael Baker Corporation
Airside Business Park
100 Airside Drive
Moon Township, PA 15108
www.mbakercorp.com

AFGHAN NATIONAL POLICE
STANDARD DESIGN
DINING FACILITIES BUILDING (559 GSM)
WOOD FIRED HEAT OPTION

LIGHT FIXTURE SCHEDULE

SHEET REFERENCE NUMBER:
E4

100% SUBMISSION

PANELBOARD D1 (SECTION 1) SURFACE MOUNTED _____ ASYM. A.I.C. MIN.
_____ AMP. MAIN LUGS (OR) 200 AMP. MAIN BREAKER W/ 200 AMP. TRIP
CIRCUIT BREAKER TYPE 380/220 VOLTS 3 PHASE 4 WIRE 50 HZ 200 AMP. BUS

CKT. NO.	TRIP AMPS	NO. POLES	WIRE MM 2	GND MM2	CONDUIT MM	LOAD SERVED	LOAD-V.A. AØ	LOAD-V.A. BØ	LOAD-V.A. CØ	LOAD-V.A. AØ	LOAD-V.A. BØ	LOAD-V.A. CØ	LOAD SERVED	CONDUIT MM	GND MM2	WIRE MM2	NO. POLES	TRIP AMPS	CKT. NO.
1	20	1	4.0	4.0	20	LIGHTING – 110, 111	0.5			1.1			LIGHTING – 104–109	20	4.0	4.0	1	20	2
3	20	1	4.0	4.0	20	LIGHTING – 103		1.2			1.7		LIGHTING – 102	20	4.0	4.0	1	20	4
5	20	1	4.0	4.0	20	LIGHTING – 100, 101			2.6			1.5	LIGHTING	20	4.0	4.0	1	20	6
7	20	1	4.0	4.0	20	J–BOX – 107	1.5			1.5			J–BOX	20	4.0	4.0	1	20	8
9	20	1	4.0	4.0	20	J–BOX – 107		1.5			1.5		J–BOX	20	4.0	4.0	1	20	10
11	20	1	4.0	4.0	20	RECEPTACLES			1.0			0.5	F.A.C.P.	20	4.0	4.0	1	20	12
13	20	1	4.0	4.0	20	RECEPTACLES	0.8			1.5			J–BOX – DISHWASHER	20	4.0	4.0	1	20	14
15	20	1	4.0	4.0	20	RECEPTACLES		0.6			1.2		J–BOX – DISHWASHER	20	4.0	4.0	1	20	16
17	20	2	4.0	4.0	20	ELECTRIC HEAT – 102			2.0			2.0	ELECTRIC HEAT – 102	20	4.0	4.0	2	20	18
19							2.0			2.0									20
21	20	1	4.0	4.0	20	EXHAUST FANS – 104, 106		0.5			2.0		ELECTRIC HEAT – 102	20	4.0	4.0	2	20	22
23	20	1	4.0	4.0	20	EXHAUST FAN – 108			0.5			2.0							24
25	20	1	4.0	4.0	20	EXHAUST FAN – 103	2.7			2.0			ELECTRIC HEAT – 102	20	4.0	4.0	2	20	26
27	20	1	4.0	4.0	20	SUPPLY FAN – 103		2.7			2.0								28
29	20	1	4.0	4.0	20	RECEPTACLES			1.0			1.2	RECEPTACLES	20	4.0	4.0	1	20	30
31	20	1	4.0	4.0	20	RECEPTACLES	1.2			2.5			ELECTRIC HEAT – 103	20	4.0	4.0	2	20	32
33	20	1	4.0	4.0	20	RECEPTACLES		1.0			2.5								34
35	60	3	25.0	6.0	32	WATER HEATER			8.0			2.5	ELECTRIC HEAT – 103	20	4.0	4.0	2	20	36
37							8.0			2.5									38
39								8.0			2.5		ELECTRIC HEAT – 103	20	4.0	4.0	2	20	40
41	20	1	4.0	4.0	20	EXHAUST FAN – 110			0.5			2.5							42
							16.7	15.5	15.6	13.1	13.4	12.2							

TOTAL CONN. LOAD PER PHASE (KVA): AØ 35.0 BØ 34.1 CØ 29.0

TOTAL CONN. LOAD 98.1 KVA. 70 % DEMAND = ESTIMATED DEMAND LOAD 68.7 SUPPLIED FROM SWITCHGEAR MAIN DISTRIBUTION

• MAIN BREAKER SHALL BE 3P EARTH GROUND TYPE.
•• PROVIDE PANEL WITH FEED THRU LUGS.
••• LOAD ON THIS PANEL INCLUDES THE LOADS ON PANEL D1 (SECTIONS 1 AND 2).

PANELBOARD D1 (SECTION 2) SURFACE MOUNTED _____ ASYM. A.I.C. MIN.
200 AMP. MAIN LUGS (OR) _____ AMP. MAIN BREAKER W/ _____ AMP. TRIP
CIRCUIT BREAKER TYPE 380/220 VOLTS 3 PHASE 4 WIRE 50 HZ 200 AMP. BUS

CKT. NO.	TRIP AMPS	NO. POLES	WIRE MM 2	GND MM2	CONDUIT MM	LOAD SERVED	LOAD-V.A. AØ	LOAD-V.A. BØ	LOAD-V.A. CØ	LOAD-V.A. AØ	LOAD-V.A. BØ	LOAD-V.A. CØ	LOAD SERVED	CONDUIT MM	GND MM2	WIRE MM2	NO. POLES	TRIP AMPS	CKT. NO.
43	20	2	4.0	4.0	20	ELECTRIC HEAT – 106, 111	2.6			2.6			ELECTRIC HEAT – 104, 105	20	4.0	4.0	2	20	44
45								2.6			2.6								46
47	20	1	4.0	4.0	20	CEILING FANS			1.2				SPARE				1	20	48
49	20	1				SPARE							SPARE				1	20	50
51	20	1				SPARE							SPARE				1	20	52
53	20	1				SPARE							SPARE				1	20	54
55	20	1				SPARE							SPARE				1	20	56
57	20	1				SPARE							SPARE				1	20	58
59	20	1				SPARE							SPARE				1	20	60
61	20	1				SPARE							SPARE				1	20	62
63	20	1				SPARE							SPARE				1	20	64
65	20	1				SPARE							SPARE				1	20	66
67	20	1				SPARE							SPARE				1	20	68
69	20	1				SPARE							SPARE				1	20	70
71	20	1				SPARE							SPARE				1	20	72
73	20	1				SPARE							SPARE				1	20	74
75	20	1				SPARE							SPARE				1	20	76
77	20	1				SPARE							SPARE				1	20	78
79	20	1				SPARE							SPARE				1	20	80
81	20	1				SPARE							SPARE				1	20	82
83	20	1				SPARE							SPARE				1	20	84
							2.6	2.6	1.2	2.6	2.6	0.0							

TOTAL CONN. LOAD PER PHASE (KVA): AO 5.2 BO 5.2 CO 1.2

TOTAL CONN. LOAD 10.4 KVA. 70 % DEMAND = ESTIMATED DEMAND LOAD 7.3 SUPPLIED FROM PANEL D1 (SECTION 1)

US Army Corps of Engineers
Afghanistan Engineer District

SYMBOL	DESCRIPTION	DATE	APR

DESIGNED BY: JRG
DWN BY: JRG
CHK BY: JRG
DATE: 09–30–09
SUBMITTED BY: BAKER
FILE NO.: ANPSDE–605XXX

Michael Baker Jr., Inc
A unit of Michael Baker Corporation
Airside Business Park
100 Airside Drive
Moon Township, PA 15108
www.mbakercorp.com

AFGHAN NATIONAL POLICE
STANDARD DESIGN
DINING FACILITIES BUILDING (559 GSM)
WOOD FIRED HEAT OPTION

PANEL SCHEDULES AND RISER DIAGRAM

SHEET REFERENCE NUMBER:
E5

100% SUBMISSION

STANDARD BUILDING DESIGNS

TRAINING BUILDING

SHEET INDEX

G1 COVER SHEET

S1 GENERAL NOTES
S2 GENERAL NOTES
S3 GENERAL NOTES
S4 GENERAL NOTES
S5 FOUNDATION/SLAB PLAN
S6 ROOF FRAMING PLAN
S7 SECTIONS & DETAILS
S8 SECTIONS & DETAILS
S9 TYPICAL DETAILS

A1 FLOOR PLAN
A2 ROOF PLAN AND DETAILS
A3 EXTERIOR ELEVATIONS
A4 BUILDING & WALL SECTIONS
A5 DOOR, WINDOW & HARDWARE TYPES & DETAILS
A6 MISCELLANEOUS DETAILS

M1 FLOOR PLAN - HVAC

E0 ELECTRICAL SYMBOLS AND ABBREVIATIONS
E1 LIGHTING PLAN
E2 POWER AND SYSTEMS PLAN
E3 DETAILS
E4 LIGHT FIXTURE SCHEDULE
E5 PANEL SCHEDULES AND RISER DIAGRAM

US Army Corps of Engineers
Afghanistan Engineer District

SYMBOL	DESCRIPTION	DATE	APR

DESIGNED BY: JDS
DATE: 09-30-09
DWN BY: JDS
SUBMITTED BY: BAKER
CHK BY: JDS
FILE NO.: ANPSDG-001XXX

Michael Baker Jr., Inc.
A unit of Michael Baker Corporation
Airside Business Park
100 Airside Drive
Moon Township PA 15108
www.mbakercorp.com

STANDARD DESIGN
TRAINING BUILDING
WOOD FIRED HEAT OPTION
COVER SHEET

SHEET REFERENCE NUMBER:
G1

100% SUBMISSION

STRUCTURAL ABBREVIATIONS:

ACI	AMERICAN CONCRETE INSTITUTE
AISC	AMERICAN INSTITUTE OF STEEL CONSTRUCTION
ALT	ALTERNATE
ASTM	AMERICAN SOCIETY FOR TESTING AND MATERIALS
AWS	AMERICAN WELDING SOCIETY
ARCH	ARCHITECTURAL
B	BOTTOM
BLDG	BUILDING
BOTT	BOTTOM
℄	CENTER LINE
CFMF	COLD FORM METAL FRAME
CFS	COLD FORMED STEEL
CIP	CAST IN PLACE
CIPL	CAST-IN-PLACE LINTEL
CJ	CONTROL JOINT
CLG	CEILING
CLR	CLEAR
CMU	CONCRETE MASONRY UNIT
COEFF	COEFFICIENT
COL	COLUMN
CONC	CONCRETE
CONT	CONTINUOUS
COORD	COORDINATE
CSJ	CONSTRUCTION JOINT
CTJ	CONTROL JOINT
DIA	DIAMETER
DIAG	DIAGONAL
DIM	DIMENSION
DWG	DRAWING
DWL	DOWEL
EA	EACH
ELEC	ELECTRICAL
ELEV	ELEVATION
EMBED	EMBEDMENT
EQUIV	EQUIVALENT
ETC	ET CETERA
E.W.	EACH WAY
EXT	EXTERIOR
FTG	FOOTING
GA	GAUGE
HORIZ	HORIZONTAL
HRS	HOURS
IBC	INTERNATIONAL BUILDING CODE
INT	INTERIOR
Kg	KILOGRAM
KIP	KIPS (1 KIP = 1,000 POUNDS)
kN	KILONEWTON
kPa	KILOPASCAL
L#	ANGLE (# INDICATES SIZE)
LLV	LONG LEG VERTICAL
M	METER
MAX	MAXIMUM
MBM	METAL BUILDING MANUFACTURER
MBMA	METAL BUILDING MANUFACTURERS ASSOCIATION
MECH	MECHANICAL
MFG	MANUFACTURER
MID	MIDDLE
MIN	MINIMUM
MISC	MISCELLANEOUS
MM	MILLIMETER
MPa	MEGAPASCAL
MTL	METAL
MWFRS	MAIN WIND FORCE RESISTING SYSTEM
N	NEWTON
N	NORTH
N/A	NOT APPLICABLE
#	NUMBER SYMBOL FOR REBAR SIZE
NTS	NOT TO SCALE
O.C.	ON CENTER
OPNG	OPENING
ℙ or PL	PLATE
PRE-ENG	PRE-ENGINEERED
REINF	REINFORCED
REQ'D	REQUIRED
SIM	SIMILAR
SPECS	SPECIFICATIONS
STD	STANDARD
STRUCT	STRUCTURAL
T	TOP
T/	TOP OF
T/ELEV	TOP ELEVATION
T&B	TOP AND BOTTOM
THK	THICK
TM	TRADE MARK
TYP	TYPICAL
UFC	UNIFIED FACILITIES CRITERIA
UON	UNLESS OTHERWISE NOTED
VERT	VERTICAL
W	WIDTH
W/	WITH

GENERAL NOTES

1.0 THIS PROJECT HAS BEEN DESIGNED FOR THE WEIGHTS AND MATERIALS INDICATED ON THE SHEETS AND FOR THE LIVE LOADS INDICATED IN THE DESIGN CRITERIA. IT IS THE CONTRACTOR'S RESPONSIBILITY TO DETERMINE ALLOWABLE CONSTRUCTION LOADS AND TO PROVIDE PROPER DESIGN AND CONSTRUCTION OF FALSEWORK, FORMWORK, STAGING, BRACING, SHEETING AND SHORING, ETC.

1.1 COORDINATE THESE SHEETS WITH THE ARCHITECTURAL, MECHANICAL, ELECTRICAL, PLUMBING, AND CIVIL SHEETS. ALL DIMENSIONS SHOWN ON THE SHEETS ARE MILLIMETERS UNLESS NOTED OTHERWISE.

1.2 THE CONTRACTOR SHALL VERIFY AND COORDINATE ALL FLOOR AND ROOF OPENING SIZES AND LOCATIONS, EQUIPMENT PAD SIZES AND LOCATIONS, ANCHOR BOLT LAYOUTS, ETC WITH EQUIPMENT SELECTED. THE CONTRACTOR SHALL MAKE ANY REQUIRED MODIFICATIONS AT NO ADDITIONAL COST.

1.3 THE CONTRACTOR SHALL REFER TO THE ARCHITECTURAL, MECHANICAL, ELECTRICAL AND PLUMBING SHEETS FOR SLEEVES, CURBS, INSERTS OR OPENINGS, ETC. NOT HEREIN INDICATED.

1.4 SLAB OPENINGS SMALLER THAN 250mm DIA TO BE CORE DRILLED IN FIELD UON. SEE MECHANICAL, ELECTRICAL AND PLUMBING SHEETS FOR LOCATIONS OF THESE OPENINGS.

1.5 WORK NOT INCLUDED ON THE SHEETS BUT IMPLIED TO BE SIMILAR TO THAT SHOWN AT CORRESPONDING PLACES ELSEWHERE ON THE SHEETS SHALL BE REPEATED.

1.6 IN CASE OF CONFLICT BETWEEN THE NOTES, DETAILS AND SPECIFICATIONS THE MOST RIGID REQUIREMENTS SHALL GOVERN.

1.7 SEE ARCHITECTURAL SHEETS FOR LOCATIONS OF MASONRY AND DRYWALL NON-LOAD BEARING PARTITIONS. PROVIDE COMPRESSIBLE FIRESAFING AT TOP OF WALL AS REQUIRED BY ARCHITECTURAL SHEETS.

1.8 COORDINATE FINISHED FLOOR DATUM ELEVATION 0.0m WITH THE CIVIL SHEETS.

1.9 DESIGN PRE-ENGINEERED METAL BUILDINGS IN ACCORDANCE W/ MBMA LATEST EDITION PER DESIGN CRITERIA ON SHEET S2.

2.0 FOUNDATION NOTES

2.1 THE GEOTECHNICAL ANALYSIS FOR THIS PROJECT IS THE RESPONSIBILITY OF THE CONTRACTOR AWARDED THE WORK. DESIGN VALUES USED IN THE STRUCTURAL ANALYSIS OF THE BUILDINGS HEREIN INDICATED HAVE BEEN ASSUMED AND SHALL BE CONFIRMED AND VERIFIED AS PART OF THE GEOTECHNICAL INVESTIGATION. VALUES WHICH DO NOT MEET THE REQUIREMENTS INDICATED ON SHEET S2 SHALL BE IMMEDIATELY BROUGHT TO THE ATTENTION OF THE CONTRACTING OFFICER FOR CONSIDERATION AND DETERMINATION ON THE NEXT APPROPRIATE COURSE OF ACTION.

2.2 SEE THE SPECIFICATION FOR ADDITIONAL REQUIREMENTS TO THOSE OUTLINED IN THE GEOTECHNICAL INVESTIGATION FOR EXCAVATION AND PREPARATION OF THE FOUNDATION AND THE SLAB ON GRADE SUBGRADE INCLUDING COMPACTION PROCEDURES.

2.3 EXCAVATIONS FOR FOOTINGS SHALL HAVE THE SIDES AND BOTTOMS TEMPORARILY LINED WITH 0.25mm POLYETHYLENE IF PLACEMENT OF CONCRETE DOES NOT OCCUR WITHIN 24 HRS OF THE EXCAVATION OF THE FOOTING.

2.4 FOUNDATION CONDITIONS NOTED DURING CONSTRUCTION WHICH DIFFER FROM THOSE DESCRIBED IN THE GEOTECHNICAL REPORT SHALL BE REPORTED TO THE GENERAL CONTRACTOR BEFORE FURTHER CONSTRUCTION IS ATTEMPTED. SEE PROJECT SPECIFICATIONS.

2.5 NO FOOTINGS OR SLABS SHALL BE POURED INTO OR AGAINST SUBGRADE CONTAINING FREE WATER, FROST, ICE OR LOOSE MATERIAL. FROST DEPTH ASSUMED TO BE 800MM

2.6 ALL SLAB-ON-GRADE, TRENCH BOTTOMS AND OTHER ON-GRADE INTERIOR HORIZONTAL SURFACES SHALL BE PLACED OVER A 0.25mm VAPOR RETARDER OVER A 100mm #57 STONE WATER BARRIER PLACED ON SUBGRADE PROPERLY PREPARED IN ACCORDANCE WITH THE CONTRACT SPECIFICATIONS. (UON)

2.7 SEE PLUMBING, ELECTRICAL & CIVIL SHEETS FOR REQUIRED UNDERSLAB UTILITIES.

2.8 SEE ARCHITECTURAL SHEETS FOR ALL WATERPROOFING DETAILS AND MATERIALS.

2.9 IF UNDERMINING OF FOOTINGS OCCURS, FILL VOIDS WITH 15MPa CONCRETE. DO NOT ATTEMPT TO REPLACE AND RECOMPACT SOIL.

3.0 CONCRETE

3.1 CONCRETE SHALL HAVE THE UNIT WEIGHT AND THE MINIMUM COMPRESSIVE STRENGTHS (f'c) AT 28 DAYS AS SHOWN IN THE CONCRETE MATERIALS SCHEDULE ON SHEET S3. SEE SPECIFICATIONS FOR ADDITIONAL INFORMATION. ENTRAIN AIR TO PRODUCE TOTAL AIR CONTENT ACCORDING TO THE SPECIFICATIONS FOR CONCRETE EXPOSED TO FREEZING TEMPERATURES (EXTERIOR FOOTINGS, SLAB TURNDOWNS, EXTERIOR SLABS AND SLABS-ON-GRADE, EXTERIOR RETAINING WALLS, AND EXTERIOR GRADE BEAMS.)

3.2 GROUT FOR BASE PLATES SHALL BE NON-SHRINKABLE GROUT AND SHALL HAVE A MINIMUM SPECIFIED COMPRESSIVE STRENGTH AT 28 DAYS OF 35MPa, UNLESS NOTED OTHERWISE.

3.3 NO CALCIUM CHLORIDE SHALL BE USED IN ANY CONCRETE.

3.4 MIXING, TRANSPORTING AND PLACING OF CONCRETE SHALL CONFORM TO ACI 301M-05

3.5 ALL CONCRETE WORK SHALL CONFORM TO THE REQUIREMENTS OF THE AMERICAN CONCRETE INSTITUTE (ACI) 318M MANUAL (metric), "BUILDING CODE REQUIREMENTS FOR REINFORCED CONCRETE", AND REQUIREMENTS OUTLINED IN THE CONTRACT SPECIFICATIONS. WHEN THERE IS A CONFLICT BETWEEN ACI AND THE SPECIFICATIONS, THE MORE STRINGENT SHALL GOVERN.

3.6 CHAMFER ALL EXPOSED EXTERNAL CORNERS OF CONCRETE WITH 20mm x45 DEGREE CHAMFER UON.

3.7 CONCRETE REINFORCEMENT BARS SHALL CONFORM TO ASTM A615M-96a, GRADE 420. REINFORCING BARS SHALL NOT BE TACK WELDED, WELDED, HEATED OR CUT, UNLESS INDICATED ON THE CONTRACT DOCUMENTS. ALL LAP SPLICES SHALL BE CLASS "B" UON.

3.8 HORIZONTAL FOOTING AND HORIZONTAL WALL REINFORCEMENT SHALL BE CONTINUOUS AND SHALL HAVE 90 DEGREE BENDS AND EXTENSIONS, OR CORNER BARS OF EQUIVALENT SIZE LAPPED WITH A CLASS B TENSION SPLICE AT CORNERS AND INTERSECTIONS. TOP BAR CRITERIA SHALL APPLY IF 300mm OR MORE OF FRESH CONCRETE IS PLACED BELOW BAR.

3.9 SLABS-ON-GRADE SHALL HAVE CONSTRUCTION JOINTS OR CRACK CONTROL JOINTS AS SHOWN ON THE SHEETS. CONSTRUCTION JOINTS CAN BE USED AT CONTROL JOINT LOCATIONS AT CONTRACTORS OPTION. SEE SLAB PLANS & JOINT DETAILS FOR ADDITIONAL INFORMATION. FOR AREAS NOT SHOWN ON SHEETS, THE MAXIMUM SPACING OF CONSTRUCTION/ CRACK CONTROL JOINTS SHALL BE 4800mm

3.10 SEE SPECIFICATIONS FOR ALL WATERPROOFING/DAMPPROOFING REQUIREMENTS.

3.11 ALL CONCRETE REINFORCEMENT SHALL BE DETAILED, FABRICATED, LABELED, SUPPORTED, AND SPACED IN FORMS AND SECURED IN PLACE IN ACCORDANCE WITH THE PROCEDURES AND REQUIREMENTS OUTLINED IN THE LATEST EDITION OF THE "BUILDING CODE REQUIREMENTS FOR REINFORCED CONCRETE", ACI 318M, AND THE "MANUAL OF STANDARD PRACTICE FOR DETAILING REINFORCED CONCRETE STRUCTURES", ACI 315M, LATEST EDITION.

3.12 SHOP DRAWINGS SHOWING REINFORCING DETAILS, INCLUDING STEEL SIZES, SPACING AND PLACEMENT, SHALL BE SUBMITTED FOR REVIEW PRIOR TO FABRICATION.

3.13 ALL DOWELS SHALL MATCH SIZE AND NUMBER OF MAIN REINFORCING, UNLESS NOTED OTHERWISE ON SHEETS.

3.14 ADDITIONAL BARS SHALL BE PROVIDED AROUND ALL FLOOR AND WALL OPENINGS AS SHOWN ON THE SHEETS.

3.15 SEE ARCHITECTURAL SHEETS FOR TYPE AND LOCATION OF ALL FLOOR FINISHES.

3.16 THE CONTRACTOR SHALL COORDINATE ADDITIONAL WALL/SLAB OPENINGS NOT SHOWN ON STRUCTURAL SHEETS. SEE MECHANICAL, ELECTRICAL, PLUMBING AND CIVIL SHEETS.

3.17 UNLESS NOTED OTHERWISE, ALL CURBS SHALL BE REINFORCED WITH AT LEAST (1)-#13 CONTINUOUS AND #13 AT 300mm O.C. DOWELS TO STRUCTURE BELOW.

3.18 THE SUB-CONTRACTOR SHALL VERIFY ALL OPENINGS, PAD SIZES, AND ANCHOR BOLTS WITH EQUIPMENT SELECTED.

3.19 FOR ALL WALLS & PIERS, PROVIDE DOWELS INTO FOOTING AT EACH VERT REINF BAR, UON DOWEL SIZE SHALL BE SAME AS VERT REINF.

3.20 ALL DEFORMED BAR ANCHORS SHALL BE TRS NELSON DIVISION OR EQUAL 15mm DIA (UON) CONFORMING TO ASTM A-496M WITH A MINIMUM TENSILE STRENGTH OF 550 MPa. INSTALL ANCHORS IN ACCORDANCE WITH MANUFACTURERS RECOMMENDATIONS BY AUTOMATIC END WELDING AS INDICATED ON THE DRAWINGS. NO UNAUTHORIZED OR FIELD WELDING SHALL BE MADE WITHOUT AUTHORIZATION FROM THE MANUFACTURER.

3.21 ALL REINFORCING INDICATED TO BE WELDED SHALL BE IN ACCORDANCE WITH ASTM A706M. "LOW ALLOY STEEL DEFORMED BARS FOR CONCRETE REINFORCEMENT". ANY INSTALLATIONS USING MANUFACTURER'S EQUIPMENT SHALL BE PER MANUFACTURER'S RECOMMENDATIONS.

3.22 PROVIDE CONCRETE POUR STOPS OR FORMS AS REQUIRED FOR INSTALLATION OF ALL CONCRETE WORK.

3.23 PROVIDE ADDITIONAL (2)-#13 x 600mm REINFORCING BARS IN SLAB-ON-GRADE AT ALL RE-ENTRANT CORNERS. PLACE BARS AT MID-DEPTH OF SLAB WITH A CLEARANCE OF 50mm FROM CORNER UON.

4.0 CONCRETE MASONRY

4.1 MASONRY CONSTRUCTION AND MATERIALS SHALL CONFORM TO ALL REQUIREMENTS OF THESE CONTRACT DOCUMENTS AND THE PROJECT SPECIFICATIONS.

4.2 THE SPECIFIED ULTIMATE COMPRESSIVE STRENGTH OF CONCRETE MASONRY (f'm) ON THE NET AREA IS A MINIMUM OF 10.4 MPa.

4.3 PROVIDE TWO #16 BARS CONTINUOUS IN ALL CMU AND CAST-IN-PLACE BOND BEAMS UON ON THE SHEETS. BOND BEAMS SHALL BE CONTINUOUS AND SPACED AT A MAXIMUM OF 1200mm OC VERTICALLY. ALL BOND BEAMS SHALL BE A MINIMUM OF 200mm IN DEPTH WITH REINFORCING BEING CONTINUOUS AND HAVING STANDARD ACI HOOKS AT EACH END. PROVIDE STANDARD BAR SPLICES AS SPECIFIED.

4.4 FOR MINIMUM WALL REINFORCING, SEE MIN CMU WALL REINFORCING DETAILS ON SHEET S9.

4.5 CMU CELLS THAT REQUIRE VERTICAL REINFORCING BARS AS INDICATED ON THE CONTRACT DRAWINGS AND/OR SPECS SHALL HAVE REINF BAR PLACED IN CENTERS OF CMU CELLS AND CONTINUOUSLY GROUTED UON.

4.6 PROVIDE LADDER TYPE JOINT REINFORCEMENT AT 200mm FOR EXTERIOR & 400mm FOR INTERIOR ON CENTER MAXIMUM, UON MINIMUM ROD SIZE USED SHALL BE 9 GA. DEFORMED WIRE AND CONFORM TO ASTM A82M, UON.

4.7 PROVIDE CONTROL JOINTS AS INDICATED ON THE ARCHITECTURAL SHEETS.

4.8 GROUT FOR MASONRY SHALL BE NORMAL WEIGHT AND HAVE A MINIMUM COMPRESSIVE STRENGTH OF 25 MPa AT 28 DAYS. GROUT SHALL CONFORM TO ASTM C476M. GROUT LIFTS SHALL NOT EXCEED 1400mm.

4.9 USE MORTAR TYPE S CONFORMING TO ASTM C270M, SEE SPECIFICATIONS.

4.10 CONCRETE MASONRY UNITS SHALL BE NORMAL WEIGHT AND CONFORM TO ASTM C90M.

4.11 ALL CMU CELLS, OPEN CAVITIES, AND AIR SPACES SHALL BE GROUTED. TO STOP FRAGMENTS FROM MORTAR BLAST

4.12 BOND BEAM REINFORCING SHALL BE DISCONTINUOUS AT CONTROL JOINTS (UON). MAXIMUM CONTROL JOINT SPACING SHALL BE AS INDICATED ON THE ARCHITECTURAL SHEETS.

4.13 CONTRACTOR SHALL COORDINATE LOCATION OF ALL OPENINGS SEE ARCH, MECH, ELEC, AND PLUMBING SHEETS. FOR SIZE AND LOCATION OF OPENINGS.

4.14 MASONRY WALLS SHALL NOT BE BACK FILLED PRIOR TO THE MORTAR AND GROUT ATTAINING THEIR RESPECTIVE MAXIMUM DESIGN STRENGTHS PER SPECIFICATIONS.

5.0 STEEL DECK

5.1 STEEL DECK SHALL BE ASTM A611M, GRADES C & D OR A653 STRUCTURAL QUALITY HAVING A MINIMUM YIELD STRENGTH OF 345 MPa AS PER THE STEEL DECK INSTITUTE (SDI) DESIGN MANUAL.

5.2 STEEL DECK SHALL BE ERECTED IN ACCORDANCE WITH THE MANUFACTURER'S SPECIFICATIONS AND ERECTION LAYOUTS AND CONNECTED TO SUPPORTING MEMBERS AS INDICATED.

5.3 COMPOSITE FLOOR DECK

5.3.1 STEEL FLOOR DECK SHALL BE 51mm RIB HEIGHT, 18 GA HOT-DIP GALVANIZED (SDI TYPE 2VLI-18) UON.

5.3.2 FLOOR DECK SHALL HAVE THE FOLLOWING MINIMUM PROPERTIES:

	18 GAUGE
MOMENT OF INERTIA, Ip	760mm4/mm WIDTH
SECTION MODULUS (TOP OF DECK), Sn	27.5mm3/mm WIDTH
SECTION MODULUS (BOTT OF DECK) Sp	27.8mm3/mm WIDTH

5.3.3 FLOOR DECK SHALL BE FASTENED TO THE SUPPORTS AS INDICATED IN THE BOTTOM OF THE FLUTES USING A SDI 36/7 PATTERN. DECK SIDELAPS SHALL BE ATTACHED USING #10 SELF-TAPPING TEK SCREWS WITH A MINIMUM 3-SIDE LAP CONNECTIONS PER SPAN.

5.3.4 SUSPENDED CEILINGS, LIGHT FIXTURES, DUCTS, CONDUITS, PIPING OR OTHER UTILITIES SHALL NOT BE SUPPORTED BY THE STEEL FLOOR DECK.

5.3.5 IN ADDITION TO MEETING THE MINIMUM REQUIREMENTS ABOVE, THE DECK MANUFACTURER SHALL DESIGN THE FLOOR DECK AND ATTACHMENTS TO STEEL FOR A MAXIMUM DEFLECTION DUE TO WET CONCRETE & 1 KPa CONSTANT LOAD OF L/240. FLOOR DECK SHALL NOT REQUIRE SHORING DURING CONCRETE PLACEMENT.

6.0 STRUCTURAL STEEL

6.1 STRUCTURAL STEEL ROLLED SHAPES AND PLATES SHALL CONFORM TO THE MATERIAL INFORMATION SCHEDULE. DIMENSIONS AND PROPERTIES SHALL BE IN ACCORDANCE TO ASTM A36.

6.2 ANCHOR BOLTS SHALL CONFORM TO ASTM A36M, HEAVY HEX UNLESS NOTED OTHERWISE.

6.3 CONNECTION BOLTS FOR STRUCTURAL STEEL MEMBERS SHALL BE 20 DIA ASTM A325M-N, UON; NUTS SHALL CONFORM TO ASTM A563M; WASHERS SHALL CONFORM TO ASTM F436M. CONNECTION BOLTS SHALL HAVE A HARDENED WASHER PLACED UNDER THE ELEMENT TO BE TIGHTENED.

6.4 DETAILING OF STRUCTURAL STEEL CONNECTIONS MUST BE CONSISTENT WITH RECOGNIZED, PUBLISHED METHODS SUCH AS IN THE AISC "STEEL CONSTRUCTION MANUAL", THIRTEENTH EDITION; "ENGINEERING FOR STEEL CONSTRUCTION", OR "VOLUME II CONNECTIONS MANUAL OF STEEL CONSTRUCTION".

6.4.1 THE CODE OF STANDARD PRACTICE OF AISC THIRTEENTH EDITION IS AMENDED SUCH THAT THE FABRICATOR/DETAILER IS RESPONSIBLE FOR THE DESIGN AND DETAILING OF ALL CONNECTIONS.

6.5 STANDARD FRAMING CONNECTIONS SHALL BE DETAILED BY THE FABRICATOR IN ACCORDANCE WITH THE AISC "STEEL CONSTRUCTION MANUAL", THIRTEENTH EDITION. CONNECTIONS SHALL BE DESIGNED TO DEVELOP A MINIMUM END REACTION OF 54kN.

6.5.1 UNLESS NOTED OTHERWISE AS THUS: (##kN), CONNECTIONS SHALL BE DESIGNED AND DETAILED FOR THE END REACTION DETERMINED FROM PART 2 - "ALLOWABLE UNIFORM LOAD TABLES" FROM THE AISC STEEL CONSTRUCTION MANUAL 13TH EDITION OR A MINIMUM OF 54 kN WHICH EVER IS GREATER.

6.6 ALL MEMBERS AND CONNECTIONS ON THE CONTRACT DRAWINGS AND CONNECTIONS NOT SHOWN SHALL BE DESIGNED AND SEALED BY A LICENSED PROFESSIONAL ENGINEER, DETAILED AND SUBMITTED FOR APPROVAL AND SHOWN ON THE SHOP DRAWINGS.

6.7 ALTERNATIVE CONNECTION DETAILS MAY BE SUBMITTED ON SHOP DRAWINGS BY THE CONTRACTOR ONLY IF ACCOMPANIED BY COMPLETE STRUCTURAL CALCULATIONS PREPARED AND SEALED BY A LICENSED PROFESSIONAL ENGINEER AND SUBMITTED FOR REVIEW.

6.8 CALCULATIONS FOR DETAILS MUST SHOW A RATIONAL ANALYSIS OF A COMPLETE LOAD PATH, INCLUDING LOCAL EFFECTS ON WEBS, FLANGES, ETC OF THE CONNECTED MEMBERS AND THE DEVICES (PLATES, SEATS, BRACKETS, BOLTS, WEBS, ETC) AFFECTING ALL CONNECTIONS. FAILURE TO SUBMIT SUCH CALCULATIONS FOR REVIEW CONCURRENT WITH SHOP DRAWING ERECTION PLANS AND DETAILS WILL BE CAUSE FOR REJECTION OF THAT SUBMITTAL.

6.8.1 ALL SHEAR TAB CONNECTIONS SUBMITTED AS AN ALTERNATE FOR APPROVAL SHALL BE DESIGNED USING A FLEXIBLE SUPPORT CONDITION.

6.8.2 BEAM AND GIRDER CONNECTIONS SHALL BE DESIGNED SUCH THAT ALL ADDITIONAL STRESSES DUE TO CONNECTION ECCENTRICITY SHALL BE DEVELOPED BY THE CONNECTION AND NOT INDUCE ANY ADDITIONAL STRESSES INTO SUPPORTING MEMBERS.

6.9 STRUCTURAL STEEL DETAILING, FABRICATION AND ERECTION SHALL CONFORM TO THE AISC "SPECIFICATION FOR STRUCTURAL STEEL BUILDINGS - ALLOWABLE STRESS DESIGN AND PLASTIC DESIGN" AND THE AISC "CODE OF STANDARD PRACTICE FOR STEEL BUILDINGS AND BRIDGES" - LATEST EDITIONS.

6.10 WELDING SHALL CONFORM TO THE AMERICAN WELDING SOCIETY STRUCTURAL WELDING CODE AWS D1.1. ELECTRODES FOR SHOP AND FIELD WELDS SHALL BE CLASS E70XX. ALL WELDING SHALL BE DONE BY QUALIFIED, CERTIFIED WELDERS PER THE ABOVE STANDARD.

6.11 SHOP AND FIELD TESTING OF WELDS AND BOLTS SHALL BE AS OUTLINED IN THE SPECIFICATIONS.

6.12 ALL FILLET WELDS SHALL BE A MINIMUM OF 5mm UNLESS NOTED OTHERWISE

6.13 THERE SHALL BE NO FIELD CUTTING OF STRUCTURAL STEEL MEMBERS FOR THE WORK OF OTHER TRADES WITHOUT PRIOR APPROVAL OF THE CONTRACTING OFFICER.

6.14 FOR FLOOR AND ROOF OPENINGS, THE FABRICATOR SHALL VERIFY OPENING LOCATIONS WITH EQUIPMENT SELECTED AND MAKE ANY NECESSARY MODIFICATIONS AT NO ADDITIONAL COST. THE CONTRACTOR SHALL COORDINATE MECHANICAL UNITS AND OPENINGS & ARCHITECTURAL ITEMS REQUIRED FOR COMPLETE INSTALLATION OF WORK. IT IS THE RESPONSIBILITY OF FABRICATOR TO RECEIVE ALL NECESSARY INFORMATION PRIOR TO FABRICATION OF THE STEEL.

6.15 ALL STRUCTURAL STEEL SHALL BE PRIMED AS PER THE SPECIFICATIONS.

6.16 ALL PLATES NOT INDICATED SHALL BE 13mm MIN THICKNESS. ALL ANGLES NOT INDICATED SHALL BE 76x76x7.9 MIN. ALL WELDS NOT INDICATED SHALL BE 6mm MIN ALL AROUND UON.

6.17 SEE MECHANICAL, ELECTRICAL, AND PLUMBING SHEETS FOR ADDITIONAL OPENINGS NOT SHOWN. ALL OPENINGS SHALL BE FRAMED 4 SIDES WITH C200x17'S UON.

US Army Corps of Engineers
Afghanistan Engineer District

SYMBOL	DESCRIPTION	DATE	APR

DESIGNED BY: WJJ
DWN BY: RCG
CHK BY: CWW
DATE: 09-30-09
SUBMITTED BY: BAKER
FILE NO.: ANPSDS-001XXX

Michael Baker Jr., Inc.
A unit of Michael Baker Corporation
Airside Business Park
100 Airside Drive
Moon Township PA 15108
www.mbakercorp.com

STANDARD DESIGN
TRAINING BUILDING
WOOD FIRED HEAT OPTION

GENERAL NOTES

SHEET REFERENCE NUMBER:
S1

100% SUBMISSION

STRUCTURAL DESIGN CRITERIA

ALL DESIGNS SHALL CONFORM TO THE PROVISIONS OF THE IBC 2006 AS APPLICABLE

1.0 DESIGN LOADS

1.1 DEAD LOADS

1.1.1 ROOF DEAD LOADS – PRE-ENGINEERED FRAMING

	MAXIMUM GRAVITY LOAD	MINIMUM GRAVITY LOAD
STEEL FRAMING	0.20 KPa	0.15 KPa
METAL DECKING/ROOFING	0.14 KPa	0.05 KPa
MECH/ELEC/PLUMBING	0.15 KPa	0.10 KPa
METAL PANEL CEILING	0.15 KPa	0.15 KPa
MISC	0.40 KPa	0.00 KPa
	1.00 KPa	0.45 KPa

1.2 LIVE LOADS (PER IBC 2006)

1.2.1 ROOF LIVE LOADS: ALL BUILDINGS

GREATER OF 1.0 KPa MINIMUM OR SNOW LOAD

1.2.2 SLAB-ON-GRADE LIVE LOADS

ALL BUILDINGS 4.80 KPa

1.3 SNOW LOADS (PER IBC 2006)

1.3.1 DESIGN PARAMETERS

GROUND SNOW LOAD (per UFC 3-310-01)	1.0 KPa
SNOW IMPORTANCE FACTOR	1.0
SNOW EXPOSURE FACTOR	1.0

1.4 SEISMIC LOADS (PER IBC 2006 & UFC 3-310-04)

1.4.1 SEISMIC PARAMETERS – PRE-ENGINEERED BUILDINGS

SEISMIC OCCUPANCY CATEGORY	II
SEISMIC IMPORTANCE FACTOR (I)	1.0
SEISMIC SITE CLASS	D
Ss	1.280
S1	0.510
Sds	0.853
Sd1	0.510
SEISMIC DESIGN CATEGORY	D
SEISMIC RESISTING SYSTEM	MOMENT RESISTING FRAME INTERMEDIATE STEEL MOMENT FRAMES
RESPONSE MODIFICATION FACTOR (R)	4.5
RESPONSE COEFFICIENT (Cs)	0.133
SEISMIC ANALYTICAL PROCEDURE	EQUIV LATERAL FORCE
SEISMIC BASE SHEAR	48.9kN

1.5 WIND LOADS (PER IBC 2006)

1.5.1 DESIGN PARAMETERS

BASIC WIND SPEED	137 Km/h
WIND IMPORTANCE FACTOR	1.0
WIND EXPOSURE CATEGORY	D
DIRECTIONALITY COEFFICIENT (Kd)	0.85
TOPOGRAPHIC FACTOR (Kzt)	1.0

1.5.2 DESIGN WIND PRESSURE – MAIN WINDFORCE RESISTING SYSTEM

LOCATION	CORNER ZONE WIDTH "a"	MEAN ROOF HEIGHT "h"	WINDWARD WALL (@ MEAN ROOF HEIGHT)	LEEWARD WALL (@ MEAN ROOF HEIGHT)	ROOF
FIELD ZONE	N/A	5095mm	600 N/m^2	−570 N/m^2	−780 N/m^2
CORNER ZONE	1440mm	5095mm	830 N/m^2	−680 N/m^2	−1130 N/m^2

a = 10% OF LEAST HORIZONTAL DIMENSION OR 0.4h, WHICHEVER IS SMALLER, BUT NOT LESS THAN EITHER 4% OF LEAST HORIZONTAL DIMENSION OR 0.9M.
h = MEAN ROOF HIEGHT, IN METERS, EXCEPT THAT EAVE HIEGHT SHALL BE USED FOR ANGLE GREATER THAN 10°.

1.5.3 DESIGN WIND PRESSURE – WALL COMPONENTS AND CLADDING

EXTERIOR WALL SYSTEMS & THEIR ATTACHMENTS TO THE PRIMARY STRUCTURE SHALL BE DESIGNED FOR THE PRESSURES SHOWN IN THE DIAGRAM BELOW:

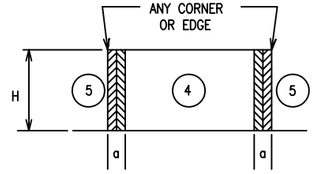

LOCATION	WINDWARD PRESSURE N/m^2 (inward)		LEEWARD PRESSURE N/m^2 (outward)		a
	4	5	4	5	
MAIN BUILDING					(mm)
AREA = 1 m^2	1050	1050	−1140	−1410	1440
AREA = 2 m^2	1010	1010	−1100	−1310	1440
AREA = 5 m^2	910	−910	−1000	−1120	1440
AREA = 10 m^2	820	820	−910	−930	1440

NOTES:
1. DESIGN WIND PRESSURES ABOVE REPRESENT THE NET PRESSURE (SUM OF INTERNAL AND EXTERNAL PRESSURE) APPLIED NORMAL TO ALL SURFACES.
2. LINEAR INTERPOLATION BETWEEN VALUES OF TRIBUTARY AREA IS PERMISSIBLE.
3. PLUS AND MINUS SIGNS SIGNIFY PRESSURE TOWARD AND AWAY FROM THE EXTERIOR SURFACE, RESPECTIVELY.

1.5 WIND LOADS (CONT)

1.5.4 DESIGN WIND PRESSURE – ROOF COMPONENTS AND CLADDING

ROOF COMPONENTS & THEIR ATTACHMENTS SHALL BE DESIGNED FOR THE PRESSURES SHOWN IN THE ADJACENT DIAGRAM & TABLE BELOW:

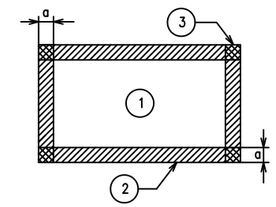

ROOF MEAN HEIGHT

LOCATION	GROSS UPLIFT PRESSURE N/m^2 (upward)			a
	1	2	3	
MAIN BUILDING				(mm)
AREA = 1 m^2	−970	−1670	−2480	1440
AREA = 2 m^2	−950	−1540	−2320	1440
AREA = 5 m^2	−880	−1260	−1990	1440
AREA = 10 m^2	−880	−1240	−1960	1440

NOTES:
1. DESIGN WIND PRESSURES ABOVE REPRESENT THE NET PRESSURE (SUM OF INTERNAL AND EXTERNAL PRESSURE) APPLIED NORMAL TO ALL SURFACES.
2. LINEAR INTERPOLATION BETWEEN VALUES OF TRIBUTARY AREA IS PERMISSIBLE.
3. PLUS AND MINUS SIGNS SIGNIFY PRESSURE TOWARD AND AWAY FROM THE EXTERIOR SURFACE, RESPECTIVELY.

2.0 FOUNDATION DESIGN CRITERIA (TO BE CONFIRMED BY THE CONTRACTOR)

THE GEOTECHNICAL ANALYSIS FOR THIS PROJECT IS THE RESPONSIBILITY OF THE CONTRACTOR AWARDED THE WORK. DESIGN VALUES USED IN THE STRUCTURAL ANALYSIS OF THE BUILDINGS HEREIN INDICATED HAVE BEEN ASSUMED AND SHALL BE CONFIRMED AND VERIFIED AS PART OF THE GEOTECHNICAL INVESTIGATION. VALUES WHICH DO NOT MEET THE REQUIREMENTS INDICATED BELOW SHALL BE IMMEDIATELY BROUGHT TO THE ATTENTION OF THE CONTRACTING OFFICER FOR CONSIDERATION AND DETERMINATION ON THE NEXT APPROPRIATE COURSE OF ACTION.

2.1.1 SOIL DESIGN PARAMETERS

NET ALLOWABLE SOIL BEARING CAPACITY	96.0 KPa
UNIT WEIGHT OF SOIL (moist)	1800 Kg/m^3
COEFF ACTIVE EARTH PRESSURE (Kpa)	0.30
COEFF PASSIVE EARTH PRESSURE (Kpp)	3.33
COEFF AT-REST EARTH PRESSURE (Kpr)	.55
COEFF OF SOIL FRICTION	.35
SUBGRADE MODULUS	4120 g/cm^3
MINIMUM BEARING DEPTH BELOW GRADE	800mm
SEISMIC SITE CLASS (based on in-situ soil)	D

US Army Corps of Engineers
Afghanistan Engineer District

SYMBOL	DESCRIPTION	DATE	APR

DESIGNED BY: WJJ
DATE: 09-30-09
DWN BY: RCG
SUBMITTED BY: BAKER
CHK BY: CWW
FILE NO.: ANPSDS-002XXX

Michael Baker Jr., Inc.
A unit of Michael Baker Corporation
Airside Business Park
100 Airside Drive
Moon Township PA 15108
www.mbakercorp.com

STANDARD DESIGN
TRAINING BUILDING
WOOD FIRED HEAT OPTION

GENERAL NOTES

SHEET REFERENCE NUMBER:
S2

100% SUBMISSION

MINIMUM LAP SPLICES OF REINFORCING BARS IN TENSION (PER ACI 318M–05)

f'c = 28 MPa CONCRETE

BAR SIZE \ CENTER TO CENTER BAR SPACING	(---TOP BARS--) LESS THAN 4db	(---TOP BARS--) 4db OR MORE	(--OTHER BARS--) LESS THAN 4db	(--OTHER BARS--) 4db OR MORE	4db
#10	460	460	410	410	40
#13	660	610	510	480	50
#16	1020	760	790	580	60
#19	1450	910	1120	710	80
#22	1960	1090	1500	840	90
#25	2590	1450	1980	1120	100
#29	3280	1830	2510	1420	110
#32	4140	2340	3200	1780	130
#36	5080	2840	3910	2180	140

NOTES:

1. LAP SPLICES ABOVE ARE IN MILLIMETERS UON.
2. YIELD STRENGTH OF REINFORCEMENT, fy, IS 400MPa (LAP SPLICE LENGTH IS IN MILLIMETERS).
3. CONCRETE IS NORMAL WEIGHT (2400Kg/m³).
4. TOP BAR INDICATES HORIZONTAL REINFORCEMENT WHICH IS PLACED ABOVE 300mm OR MORE OF FRESH CONCRETE.
5. SEE COLUMN SCHEDULE FOR COLUMN AND SHEAR WALL VERTICAL LAP SPLICE.
6. STRAIGHT DEVELOPMENT LENGTH OF AN UNLAPPED BAR IS EQUAL TO VALUE FROM TABLE DIVIDED BY 1.3.
7. CATEGORY FOR BARS SPACED LESS THAN 4d, OR ON CENTER CORRESPONDS TO CATEGORY 1 IN THE CRSI HANDBOOK WHEREAS FOR BARS SPACED 4d, OR MORE ON CENTER CORRESPOND TO CRSI CATEGORY 5.

STEEL MATERIALS SCHEDULE

STRUCTURAL ELEMENT	FY YIELD STRENGTH (MPa)	REMARKS
BEAMS & GIRDERS	250	ASTM A36M ASTM A6M
COLUMNS	240	ASTM A53–95 GRADE B ASTM A6M
MISC BRACING	250	ASTM A572M ASTM A6M
CONNECTIONS, PLATES, & ALL OTHERS	250	ASTM A36M ASTM A6M
ANCHOR BOLTS	–	ASTM A36M or A307M ASTM A6M
PIPES	240	ASTM A53–95 GRADE B ASTM A6M
TUBING	345	ASTM A500–93 GRADE C ASTM A6M
HIGH STRENGTH BOLTS	–	ASTM A325M–N
WELDING ELECTRODES	–	AWS D1.1–90 E70xx

CONCRETE COVER SCHEDULE

MINIMUM CONCRETE COVER PROTECTION FOR REINFORCEMENT BARS SHALL BE AS FOLLOWS: (SEE ACI 318M–05, SECTION 7.7 FOR CONDITIONS NOT NOTED). DIMENSIONS FOR BAR PLACEMENT GIVEN IN SECTIONS AND DETAILS SHALL SUPERSEDE MINIMUM COVER REQUIREMENTS GIVEN HERE. DIMENSIONS ARE IN mm.

FOOTINGS (EARTH FORMED)		70
COLUMNS / PIERS (TO TIES)		40
GRADE BEAMS OR SLAB TURNED DOWN EDGES:		
TOP		40
BOTTOM (EARTH FORMED)		70
SIDES (EARTH FORMED)		70
SIDES (BOARD FORMED)	#16 BAR & SMALLER	40
	#19 THRU #36 BAR	50
ELEVATED BEAMS & SLABS:		
BEAM TIES & STIRRUPS (NOT EXPOSED TO WEATHER)		40
BEAM TIES & STIRRUPS (EXPOSED TO WEATHER)		50
FLOOR SLABS (NOT EXPOSED TO WEATHER)		20
FLOOR SLABS (EXPOSED TO WEATHER)		
#19 & LARGER		50
#13 & SMALLER		40
ROOF SLAB BARS		25
SLABS–ON–GRADE (NO EXPOSURE TO WEATHER) FROM TOP		20
SLABS–ON–GRADE (EXPOSURE TO WEATHER) FROM TOP		40
UTILITY TUNNEL WALLS, RETAINING WALLS AND SHEAR WALLS, (NO SURFACES SHALL BE EARTH FORMED) EARTH SIDE AND FRONT SIDE (EXPOSED TO WEATHER):		
#16 BAR AND SMALLER		40
#19 THRU #36 BAR		50

PROVIDE STANDARD BAR CHAIRS AND SPACERS AS REQUIRED TO MAINTAIN CONCRETE PROTECTION SPECIFIED.

CONCRETE MATERIALS SCHEDULE

STRUCTURAL ELEMENT	f'c CONCRETE COMPRESSIVE STRENGTH @ 28 DAYS (MPa)
SLAB–ON–GRADE/TURN–DOWN SLABS	28
FLOOR SLABS	28
ALL FOOTINGS (UON)	28
MISC. CURBS, WALLS AND PADS UON	28
CAST–IN–PLACE LINTEL	28
CONCRETE FRAMING – BEAMS AND COLUMNS	28

NOTES:

1. ALL CONCRETE SHALL BE NORMAL WEIGHT CONCRETE. (2400 Kg/m³ UON)
2. ALL CONCRETE SHALL HAVE A MAX WATER–CEMENT RATIO OF 0.45.

STANDARD HOOKS IN TENSION PER (ACI 318M–05)

BAR SIZE	HOOK DEVELOPMENT LENGTH Ldh (mm) f'c 28 MPa
#10	180
#13	250
#16	300
#19	380
#22	430
#25	480
#29	560
#32	610
#36	690

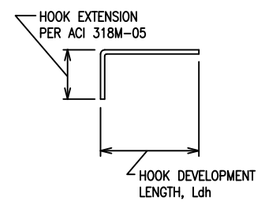

NOTES:

1. CONCRETE IS NORMAL WEIGHT CONCRETE.
2. BAR YIELD STRENGTH, fy = 420 MPa
3. SIDE COVER REQUIREMENTS OF ACI SECT. 12.5.3.2 ARE ASSUMED TO NOT BE MET.
4. TIE OR STIRRUP REQUIREMENTS OF ACI SECT. 12.5.3.2 ARE ASSUMED TO NOT BE MET.
5. REDUCTION FOR EXCESS REINFORCEMENT IS NOT TAKEN.
6. HOOK DEVELOPMENT LENGTH IS VALID FOR 180° HOOKS ALSO.

SPREAD FOOTING AND PIER SCHEDULE

MARK	FOOTING SIZE LENGTH (mm)	FOOTING SIZE WIDTH (mm)	FOOTING SIZE THICKNESS (mm)	FOOTING REINFORCING	PIER SIZE (mm)	PIER T/PIER	PIER VERT. BARS	PIER TIES	REMARKS
F1	2500	2500	300	(7)–#16 EW T&B	900	–150	(8)–#19	2 SETS #13 @ 125	HAIRPINS REQ'D. SEE DETAILS
F2	1800	1800	300	(5)–#16 EW T&B	900	–150	(8)–#19	#13 @ 250 TOP 2 @ 75	----
F3	2500	2500	300	(7)–#16 EW T&B	1000 x2080	–150	(16)–#19	2 SETS #13 @ 125	HAIRPINS REQ'D. SEE DETAILS

NOTES:

1. DIMENSIONS NOTED ARE MILLIMETERS (mm) UON
2. T/PIER ELEV GIVEN IN REFERENCE TO 0.0 mm DATUM OR FINISH FLOOR ELEV/SLAB ELEV, DISTANCE ABOVE OR BELOW INDICATED AS NEGATIVE OR POSITIVE.
3. PIER SIZE INDICATED IS SQUARE (DIMENSION SAME IN BOTH DIRECTIONS) UON

US Army Corps of Engineers
Afghanistan Engineer District

SYMBOL	DESCRIPTION	DATE	APR

DESIGNED BY: W.L.J
DATE: 09–30–09
DWN BY: RCG
SUBMITTED BY: BAKER
CHK BY: CWW
FILE NO.: ANPSDS–003XXX

Michael Baker Jr., Inc.
A unit of Michael Baker Corporation
Airside Business Park
100 Airside Drive
Moon Township PA 15108
www.mbakercorp.com

STANDARD DESIGN
TRAINING BUILDING
WOOD FIRED HEAT OPTION

GENERAL NOTES

SHEET REFERENCE NUMBER:
S3

100% SUBMISSION

MASONRY CONCRETE LINTEL SCHEDULE

OPENING TYPE OR SIZE, BEAM LOCATION OR TYPE	MAX SPAN (mm)	BEAM DEPTH (mm)	MAIN REINFORCING			SHEAR REINF STIRRUPS
			TOP	BOTTOM	OTHER	
EXT WALL OPENING, 1-STORY BLDG	1800	400	(2)-#13	(2)-#13		----
EXT WALL OPENING, 1-STORY BLDG	900	200		(2)-#13		----
INT WALL OPENING, NON-BEARING	2400	400		(2)-#13		----
INT WALL OPENING, NON-BEARING	1800	200		(2)-#13		----
INT WALL OPENING, NON-BEARING	900	200		(2)-#13		----
INT WALL OPENING, SHEAR WALL	900	200		(2)-#13		----
INT WALL OPENING, SHEAR WALL	1800	200	(2)-#13	(2)-#13		----
INT WALL OPENING, SHEAR WALL	2400	400	(2)-#16	(2)-#16		#13 @ 300

1. STRUCTURAL SHEETS DO NOT INDICATE ALL OPENINGS IN MASONRY WALLS. VERIFY NUMBER, SIZE AND LOCATION OF ALL OPENINGS IN MASONRY WALLS FROM ARCHITECTURAL SHEETS AND APPROVED PLUMBING, MECHANICAL, AND ELECTRICAL SHOP DRAWINGS.
2. PROVIDE 200mm BEARING EA END FOR 200mm DEEP CMU LINTEL PROVIDE 400mm BEARING EA END FOR 400mm DEEP CMU LINTEL.
3. FOR HEAD DETAILS REFER TO ARCHITECTURAL SHEETS.
4. REINFORCING SHALL BE ASTM A615M, GRADE 400. CONCRETE FOR CAST-IN-PLACE BEAMS SHALL HAVE A MINIMUM COMPRESSIVE STRENGTH OF 28 MPa AT 28 DAYS.
5. CONTRACTOR SHALL SUBMIT FOR APPROVAL SHOP DRAWINGS AND SCHEDULES SHOWING SIZE, DETAILS, LOCATIONS, ETC FOR ALL CAST-IN-PLACE BEAMS IN CMU WALLS.

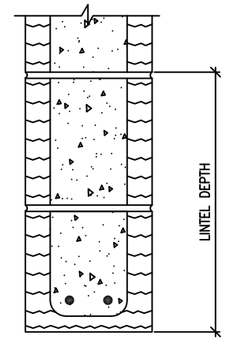

TYPICAL CMU LINTEL DETAIL

SCALE: NTS

NOTE:
1. SEE SCHEDULE THIS SHEET FOR REINFORCING & LINTEL DEPTH

MAXIMUM CMU WALL UNSUPPORTED HEIGHT OR LENGTH

	WALL THICKNESS (mm)	EXTERIOR WALL NON-LOAD BEARING (mm)	INTERIOR NON-LOAD BEARING WALL (mm)
MAX HEIGHT OR LENGTH BETWEEN SUPPORTS	200	4800	7200

NOTE: CMU WALL MAXIMUM LATERAL SUPPORT SPACING GIVEN IN SECTIONS AND DETAILS SHALL SUPERSEDE THE ABOVE SCHEDULE REQUIREMENTS.

MASONRY REINFORCING MINIMUM LAP SPLICES

BAR SIZE	BASIC LAP SPLICE Ld FOR CMU REINFORCING (mm)
#10	450
#13	600
#16	750
#19	900
#22	1050
#25	1200

TYPICAL CMU WALL REINFORCING SCHEDULE

WALL TYPE OR LOCATION	WALL THICKNESS (mm)	CONT VERT REINF (CENTERED IN CMU, UON)	CONT CAST IN PLACE BOND BEAM			REMARKS
			DEPTH (mm)	REINF (BOTT UON)	MAX BOND BEAM VERT SPACING (mm)	
ALL PERIMETER/EXTERIOR WALLS (UON)	200	1-#16 @ 600	200	2-#16	1200	-----
NON-LOAD BEARING INTERIOR WALLS WITH TOP AND BOTT SUPPORTS	200	1-#13 @ 1200	200	2-#16	1200	-----

NOTES:
1. REINFORCING SIZES AND SPACING GIVEN IN SECTIONS AND DETAILS SHALL SUPERSEDE THE ABOVE SCHEDULE REQUIREMENTS.
2. PROVIDE CONTINUOUS CAST IN PLACE CONCRETE BOND BEAM AT ALL WALL LATERAL SUPPORT LOCATIONS.
3. REINFORCING INDICATED SHALL BE CONTINUOUS FOR FULL EXTENT OF SPLICE FOLLOWING THE REQUIREMENTS OF THE LAP SPLICE TABLE SHOWN ON THIS SHEET.
4. WALLS HAVE BEEN DESIGNATED AS VERTICALLY SPANNING UON AND THEREFORE MUST BE TEMPORARILY SUPPORTED DURING CONSTRUCTION UNTIL THE SUPPORTING DIAPHRAGMS (FLOOR AND ROOF SYSTEMS) HAVE BEEN COMPLETELY INSTALLED. SHORING IS THE RESPONSIBILITY OF THE CONTRACTOR.
5. ALL CMU WALLS SHALL BE FULLY GROUTED IN LIFTS NOT EXCEEDING THOSE BY CODE (UON)
6. SEE TYPICAL CMU WALL DETAILS ON SHEET S9.

US Army Corps of Engineers
Afghanistan Engineer District

SYMBOL	DESCRIPTION	DATE	APR

DESIGNED BY: W.L.J
DATE: 09-30-09
DWN BY: RCG
SUBMITTED BY: BAKER
CHK BY: CWW
FILE NO.: ANPSDS-004XXX

Michael Baker Jr., Inc.
A unit of Michael Baker Corporation
Airside Business Park
100 Airside Drive
Moon Township PA 15108
www.mbakercorp.com

STANDARD DESIGN
TRAINING BUILDING
WOOD FIRED HEAT OPTION

GENERAL NOTES

SHEET REFERENCE NUMBER:
S4

100% SUBMISSION

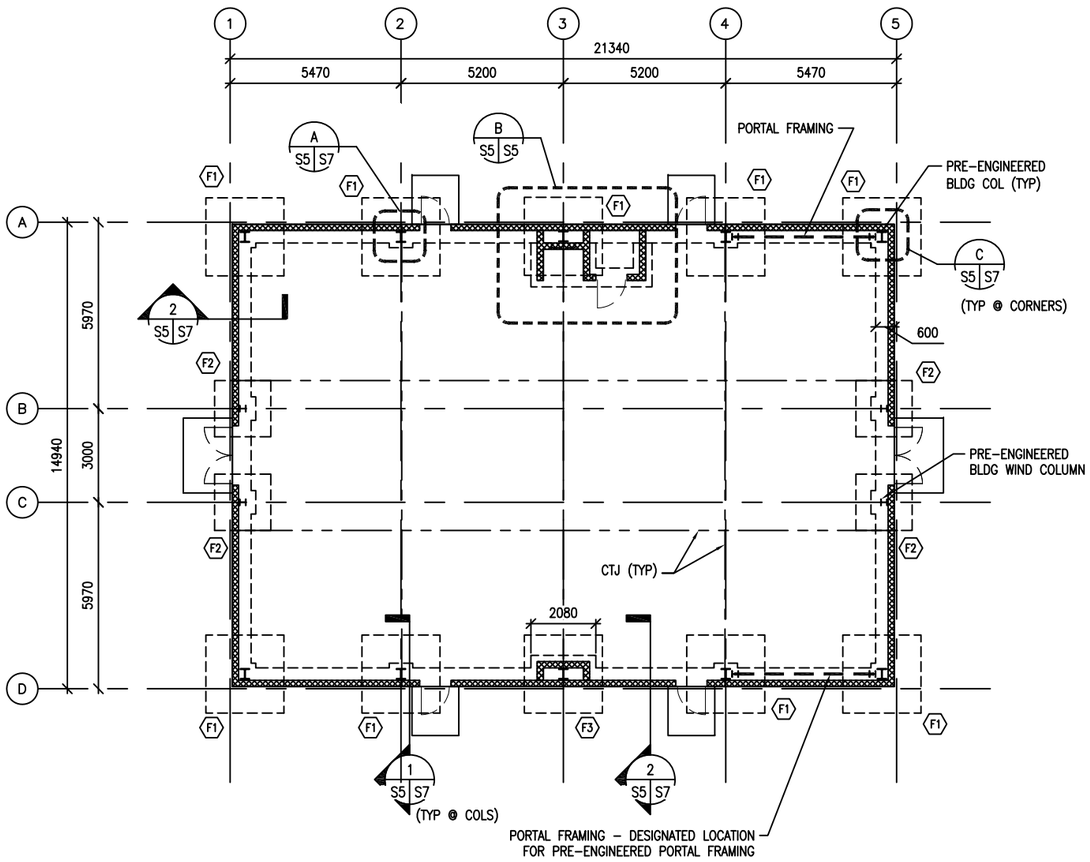

FOUNDATION PLAN

SCALE: 1:100

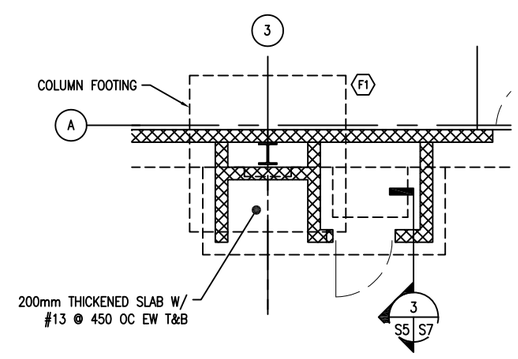

DETAIL

SCALE: 1:50

PLAN NOTES:

1. FINISH FIRST FLOOR ELEVATION SHALL BE (DATUM 0.0). ALL PLUS OR MINUS DIMENSIONS INDICATED ON PLAN OR REFERRED TO IN NOTES RELATE TO FINISH FIRST FLOOR ELEVATION.
2. TOP OF FOOTINGS SHALL BE –500 UNLESS OTHERWISE INDICATED.
3. UNLESS OTHERWISE INDICATED, FLOORS SHALL BE 150 THICK CONCRETE SLAB–ON–GRADE W/ #13 REBAR @ 450 OC EW (38 CLR TOP) OVER 100 COMPACTED CAPILLARY WATER BARRIER (#57 STONE).
4. SPREAD FOOTINGS INDICATED THUS (XXXX) ON PLAN. REFER TO SPREAD FOOTING SCHEDULE ON SHEET S3.
5. REFER TO SHEETS S1 TO S3 FOR STRUCTURAL NOTES, BASIS OF DESIGN, SYMBOLS, & ABBREVIATIONS.
6. CTJ & CSJ INDICATES SLAB CONTROL OR CONSTRUCTION JOINTS RESPECTIVELY. REFER TO SHEET S9 FOR DETAILS.
7. REFER TO ARCHITECTURAL SHEETS FOR MASONRY PARTITION TYPES.
8. ALL CMU TO BE FULLY GROUTED UNLESS OTHERWISE NOTED. SEE CMU WALL REINFORCING SCHEDULE ON SHEET S4.
9. SEE MECHANICAL AND ELECTRICAL SHEETS FOR CONCRETE PAD LOCATIONS, SIZES, AND THICKNESS NOT SHOWN. SEE SHEET S9 FOR DETAILS.
10. PRIOR TO CONSTRUCTION OF FOUNDATIONS, THE CONTRACTOR SHALL COORDINATE THE LOCATIONS OF ALL FOOTINGS, PIERS, AND TURN DOWN SLAB EDGES WITH THE PRE–ENGINEERED BUILDING DRAWINGS AND REVISE AS NECESSARY.
11. PRE–ENGINEERED COLUMN BASES SHALL BE DESIGNED AS PINNED ONLY.
12. LOCATIONS OF PORTAL FRAMES HAVE BEEN SHOWN IN PLAN AND SHALL NOT BE MODIFIED UNLESS APPROVED BY THE CONTRACTING OFFICER.
13. PORTAL FRAME COLUMNS ARE TO BE ATTACHED TO MAIN RIGID FRAME COLUMNS AT BASE AND DO NOT REQUIRE ADDITIONAL PIERS.
14. ALL PIERS FOR PRE–ENGINEERED BUILDING COLUMNS SHALL HAVE HAIR–PIN TIES AS INDICATED IN THE DETAILS.
15. ANCHOR BOLTS FOR PRE–ENGINEERED BUILDING COLUMNS/PORTAL FRAMES SHALL BE (4)–20 DIA A36M ANCHOR BOLTS (MIN) WITH 300 EMBED MIN INTO PIER/GRADE BEAM.
16. TOP OF PIER ELEVATION SET AT –100. COORDINATE BOTTOM/BASE PLATE AND GROUT REQUIREMENTS WITH PRE–ENGINEERED BUILDING MANUFACTURER.

UNLESS OTHERWISE NOTED, LINEAR DIMENSIONS SHOWN ARE IN MILLIMETERS (MM)

SCALE: 1: 50

SCALE: 1: 100

US Army Corps of Engineers

Afghanistan Engineer District

SYMBOL	DESCRIPTION	DATE	APR

DESIGNED BY: W.LJ
DATE: 09–30–09
DWN BY: RCG
SUBMITTED BY: BAKER
CHK BY: CWW
FILE NO.: ANPSDS–105XXX

Michael Baker Jr., Inc.
A unit of Michael Baker Corporation
Airside Business Park
100 Airside Drive
Moon Township PA 15108
www.mbakercorp.com

STANDARD DESIGN
TRAINING BUILDING
WOOD FIRED HEAT OPTION

FOUNDATION/SLAB PLAN

SHEET REFERENCE NUMBER:

S5

100% SUBMISSION

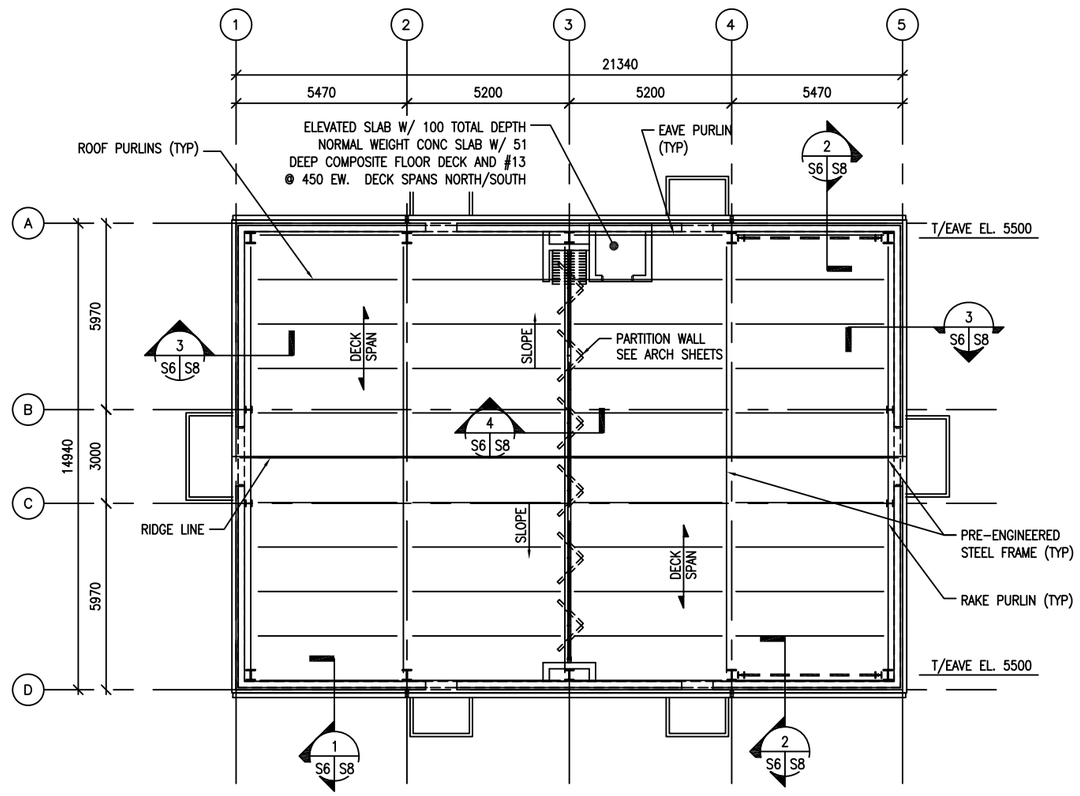

ROOF FRAMING PLAN

SCALE: 1:100

NOTES:

1. REFER TO SHEETS S1 TO S4 FOR STRUCTURAL NOTES, BASIS OF DESIGN SYMBOLS AND ABBREVIATIONS.
2. PRE-ENGINEERED BUILDING MANUFACTURER SHALL COORDINATE ALL LOADING REQUIREMENTS INDICATED ON THE SHEETS AND SPECIFICATIONS WITH OTHER TRADES.
3. PRE-ENGINEERED BUILDING COLUMN BASES SHALL BE DESIGNED AS PINNED ONLY.
4. LOCATIONS OF PORTAL FRAMES HAVE BEEN SHOWN IN PLAN AND SHALL NOT BE MODIFIED UNLESS APPROVED BY THE CONTRACTING OFFICER.
5. PRE-ENGINEERED BUILDING MANUFACTURER SHALL COORDINATE ALL HANGING LOADING FROM EQUIPMENT OR ARCHITECTURAL ELEMENTS AND INCLUDE IN THE DESIGN OF THE FRAMING.
6. SEE SPECIFICATION FOR LATERAL DRIFT REQUIREMENTS.
7. BUILDING DOES NOT NEED PROVISIONS FOR FUTURE EXPANSION AT END WALLS.
8. PRE-ENGINEERED BUILDING MANUFACTURER IS RESPONSIBLE TO DESIGN ALL JAMB AND HEAD CONDITION SUPPORT SUB-FRAMING AS REQUIRED FOR THE LOADING INDICATED AND THE REQUIREMENTS OF THE ATTACHED COMPONENTS.
9. SEE CMU WALL REINFORCING SCHEDULE ON SHEET S4.

UNLESS OTHERWISE NOTED, LINEAR DIMENSIONS SHOWN ARE IN MILLIMETERS (MM)

0 2000 4000 8000

SCALE: 1: 100

US Army Corps of Engineers

Afghanistan Engineer District

SYMBOL	DESCRIPTION	DATE	APR

DESIGNED BY: W.L.J
DATE: 09-30-09
DWN BY: RCG
SUBMITTED BY: BAKER
CHK BY: CWW
FILE NO.: ANPSDS-106XXX

Michael Baker Jr., Inc.
A unit of Michael Baker Corporation
Airside Business Park
100 Airside Drive
Moon Township PA 15108
www.mbakercorp.com

STANDARD DESIGN
TRAINING BUILDING
WOOD FIRED HEAT OPTION

ROOF FRAMING PLAN

SHEET REFERENCE NUMBER:

S6

100% SUBMISSION

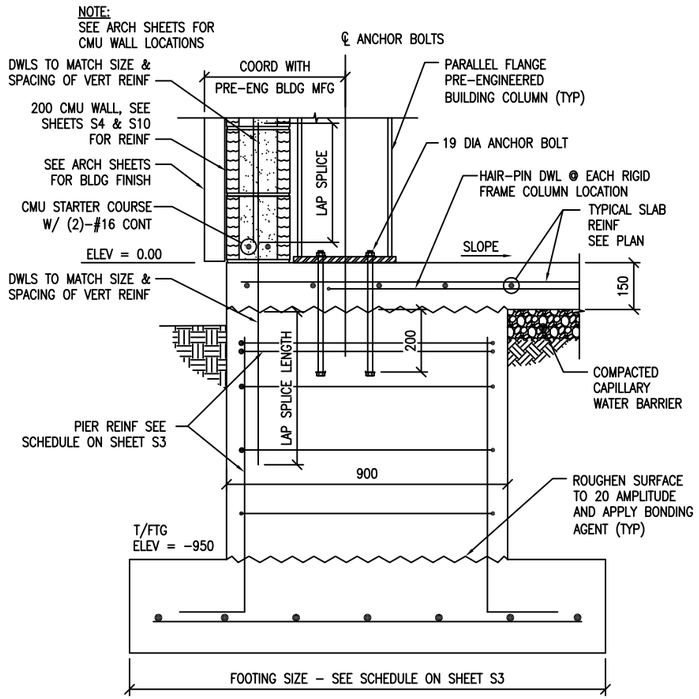

1 S5 S7 SECTION
SCALE: 1:10

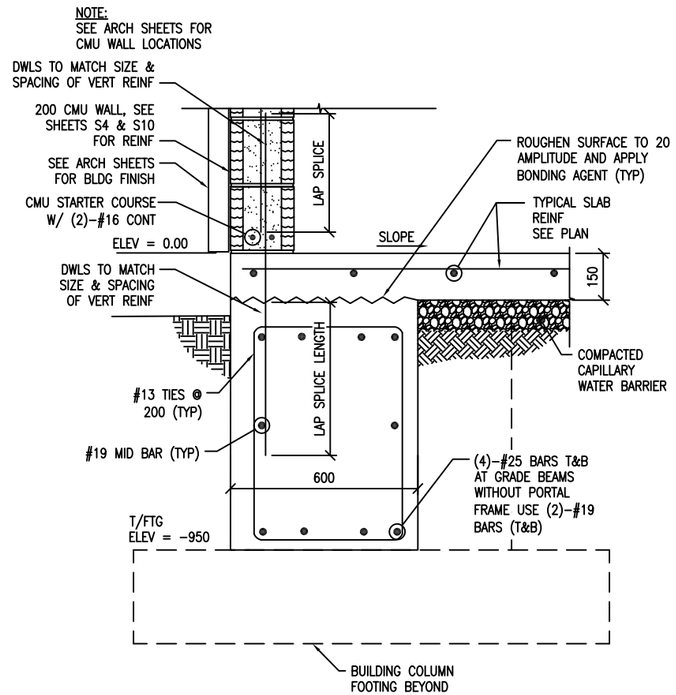

2 S5 S7 SECTION
SCALE: 1:10

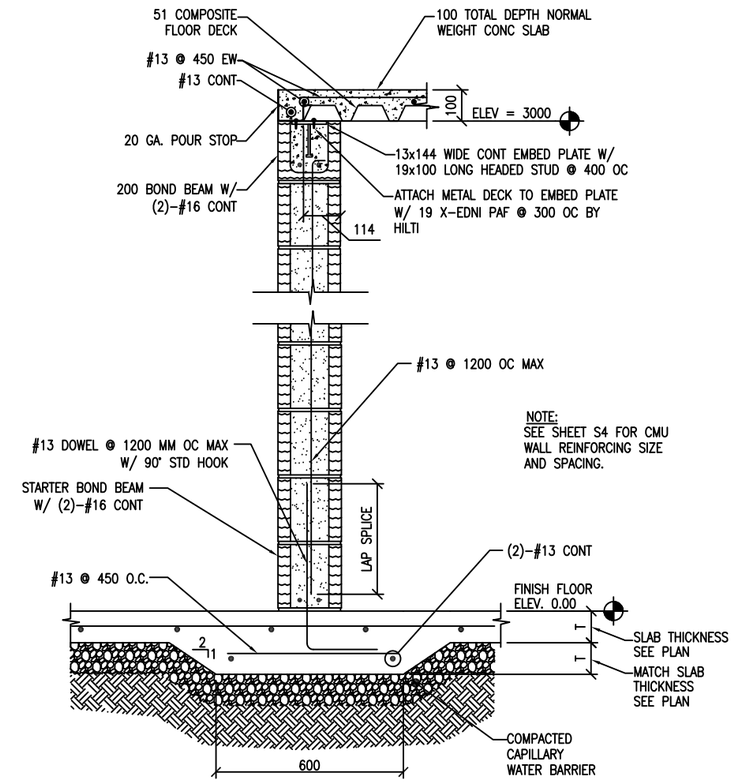

3 S5 S7 SECTION
SCALE: 1:10

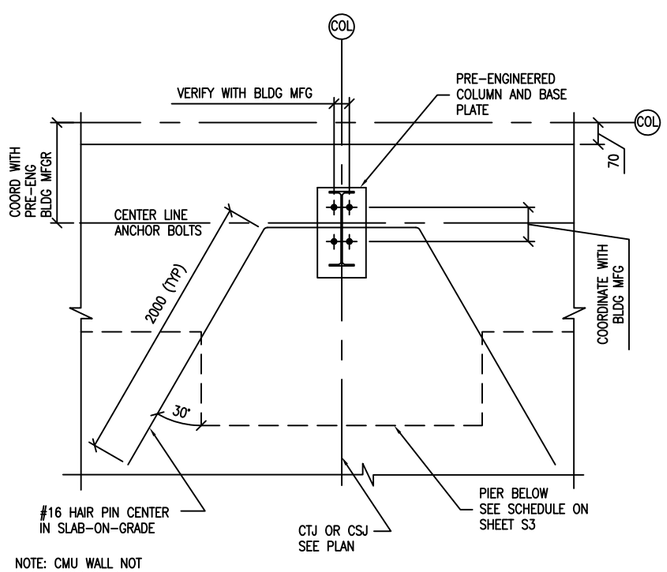

A S5 S7 COLUMN DETAIL
SCALE: 1:10

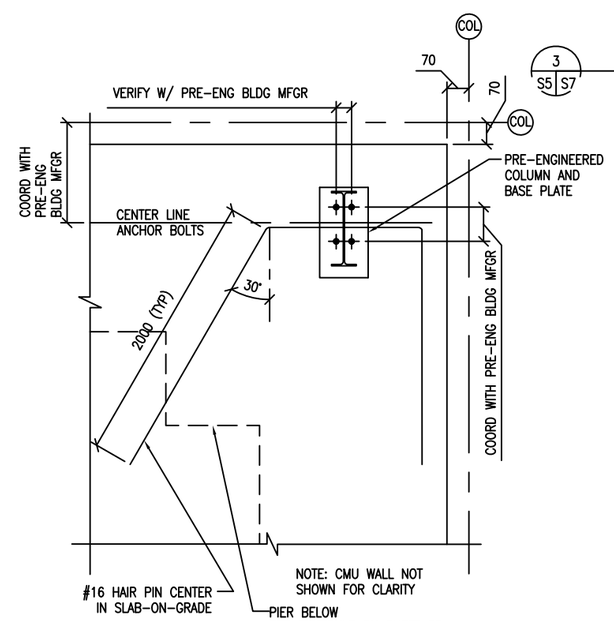

C S5 S7 COLUMN DETAIL
SCALE: 1:10

UNLESS OTHERWISE NOTED, LINEAR DIMENSIONS SHOWN ARE IN MILLIMETERS (MM)

0 200 400 800
SCALE: 1: 10

US Army Corps of Engineers
Afghanistan Engineer District

SYMBOL	DESCRIPTION	DATE	APR

DESIGNED BY: W.L.J
DATE: 09-30-09
DWN BY: RCG
SUBMITTED BY: BAKER
CHK BY: CWW
FILE NO.: ANPSDS-307XXX

Michael Baker Jr., Inc.
A unit of Michael Baker Corporation
Airside Business Park
100 Airside Drive
Moon Township PA 15108
www.mbakercorp.com

STANDARD DESIGN
TRAINING BUILDING
WOOD FIRED HEAT OPTION

SECTIONS & DETAILS

SHEET REFERENCE NUMBER:
S7

100% SUBMISSION

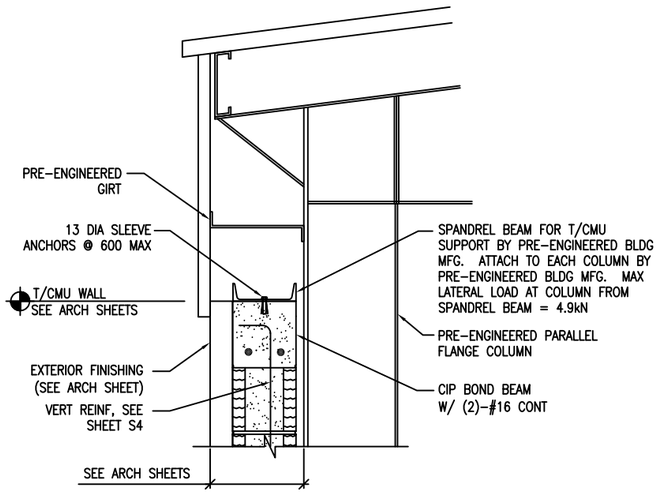

NOTE:
SEE SHEET S4 FOR VERT REINF SIZE AND SPACING (TYP)

1 S6 S8 SECTION
SCALE: 1:10

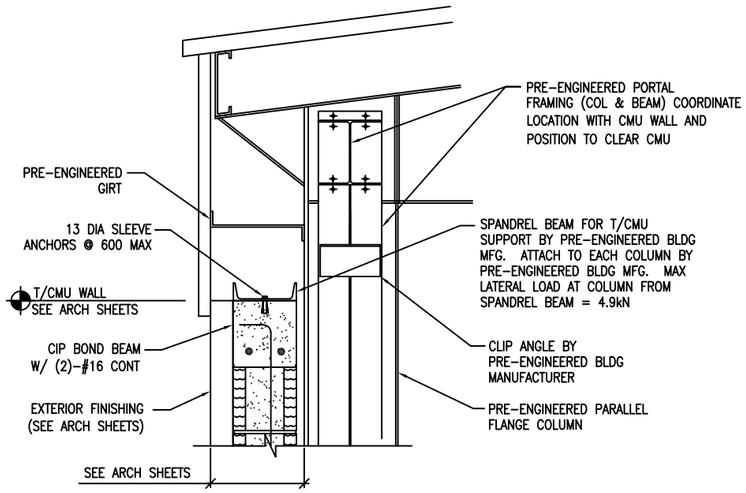

NOTE:
SEE SHEET S4 FOR VERT REINF SIZE AND SPACING (TYP)

2 S6 S8 SECTION
SCALE: 1:10

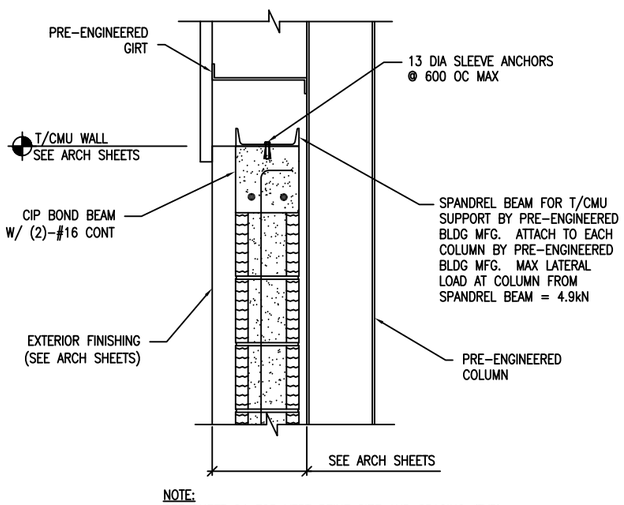

NOTE:
SEE SHEET S4 FOR VERT REINF SIZE AND SPACING (TYP)

3 S6 S8 SECTION
SCALE: 1:10

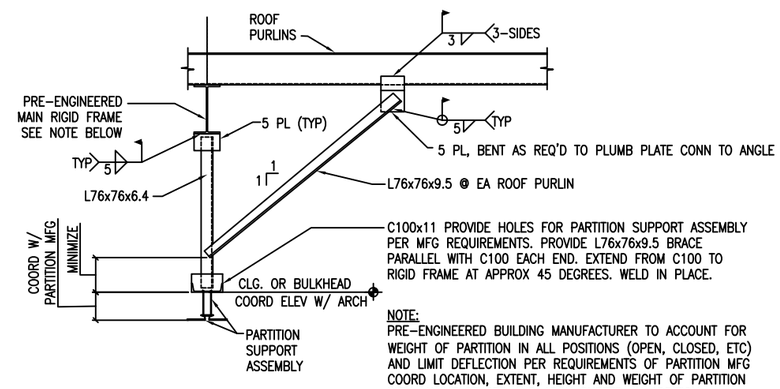

NOTE:
PRE-ENGINEERED BUILDING MANUFACTURER TO ACCOUNT FOR WEIGHT OF PARTITION IN ALL POSITIONS (OPEN, CLOSED, ETC) AND LIMIT DEFLECTION PER REQUIREMENTS OF PARTITION MFG COORD LOCATION, EXTENT, HEIGHT AND WEIGHT OF PARTITION WITH MANUFACTURER AND ARCH SHEETS. IN ADDITION, PRE-ENGINEERED BUILDING MFG SHALL INCLUDE ADDITIONAL WEIGHTS FROM BULKHEADS AND APPURTENANCES, ETC

4 S6 S8 SECTION
SCALE: 1:20

UNLESS OTHERWISE NOTED, LINEAR DIMENSIONS SHOWN ARE IN MILLIMETERS (MM)

0 200 400 800
SCALE: 1: 10

0 400 800 1600
SCALE: 1: 20

US Army Corps of Engineers
Afghanistan Engineer District

SYMBOL	DESCRIPTION	DATE	APR

DESIGNED BY: W.L.J
DATE: 09-30-09
DWN BY: RCG
SUBMITTED BY: BAKER
CHK BY: CWW
FILE NO.: ANPSDS-308XXX

Michael Baker Jr., Inc
A unit of Michael Baker Corporation
Airside Business Park
100 Airside Drive
Moon Township PA 15108
www.mbakercorp.com

STANDARD DESIGN
TRAINING BUILDING
WOOD FIRED HEAT OPTION

SECTIONS & DETAILS

SHEET REFERENCE NUMBER:
S8

100% SUBMISSION

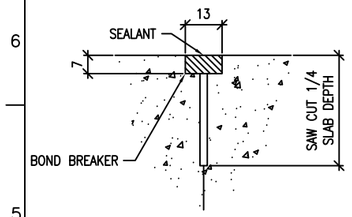

CONTROL JOINT DETAIL

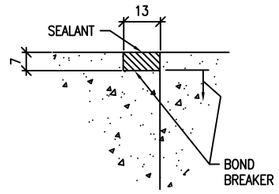

CONSTRUCTION JOINT DETAIL

1/S12 TYPICAL CONCRETE SLAB JOINT FINISH DETAIL

SCALE: NTS

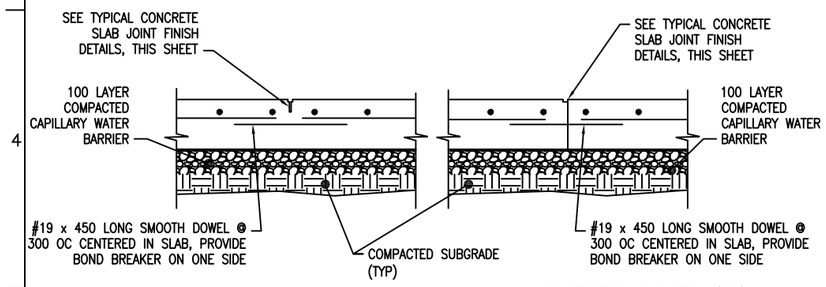

CONTROL JOINT DETAIL (CTJ)

CONSTRUCTION JOINT DETAIL (CSJ)

2/S12 TYPICAL SLAB ON GRADE JOINT DETAILS

SCALE: NTS

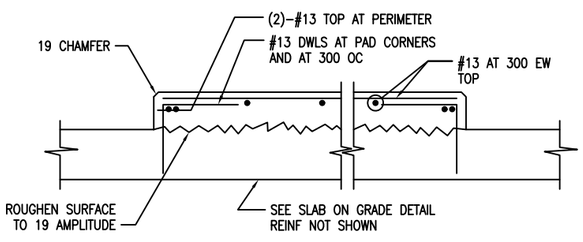

3/S12 INTERIOR EQUIPMENT PAD DETAIL

SCALE: NTS

DETAIL NOTE:

1. COORDINATE EQUIPMENT PAD SIZE AND LOCATIONS W/ ELECTRICAL/MECHANICAL SHEETS AND EQUIPMENT MANUFACTURER.

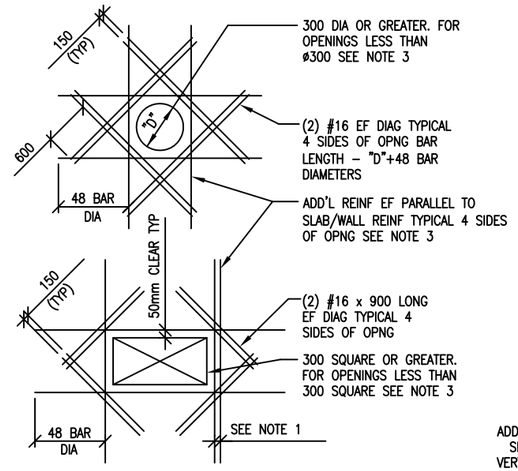

SLAB OPENINGS

DETAIL NOTES:

1. WHERE MORE THAN ONE ADDITIONAL BAR IS REQUIRED PARALLEL TO THE EXISTING SLAB/WALL REINFORCING THE ADDITIONAL REINFORCING BARS SHALL BE SPACED AT 100 ON CENTER.
2. ADDITIONAL REINFORCING PARALLEL TO THE SLAB/WALL REINFORCING SHALL BE #16 BARS THAT PROVIDE A STEEL AREA ON EACH SIDE OF THE OPENING EQUAL TO 1/2 THE AREA OF THE REINFORCING CUT BY THE OPENING.
3. FOR OPENINGS WITH SIDES OR DIAMETERS LESS THAN 300 SPREAD THE SLAB/WALL REINFORCING TO CLEAR THE OPENING.

4/S12 ADD'L REINFORCEMENT DETAILS

SCALE: NTS

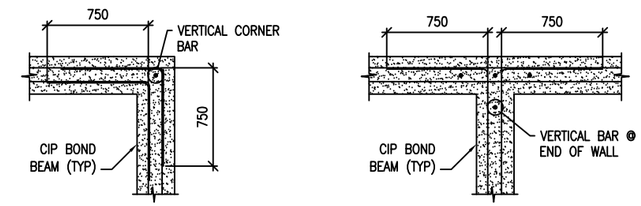

BOND BEAM CORNER

BOND BEAM INTERSECTION

5/S12 CIP BOND BEAM DETAILS

SCALE: NTS

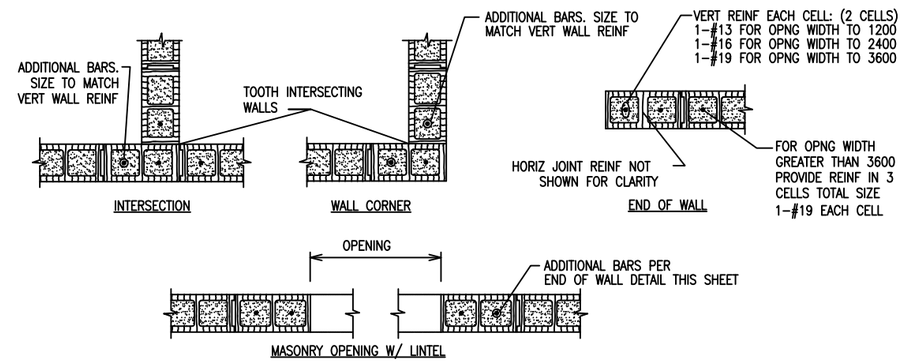

INTERSECTION

WALL CORNER

END OF WALL

MASONRY OPENING W/ LINTEL

NOTE:

1. ALL CMU CELLS FULLY GROUTED

6/S12 TYPICAL CMU DETAILS

SCALE: NTS

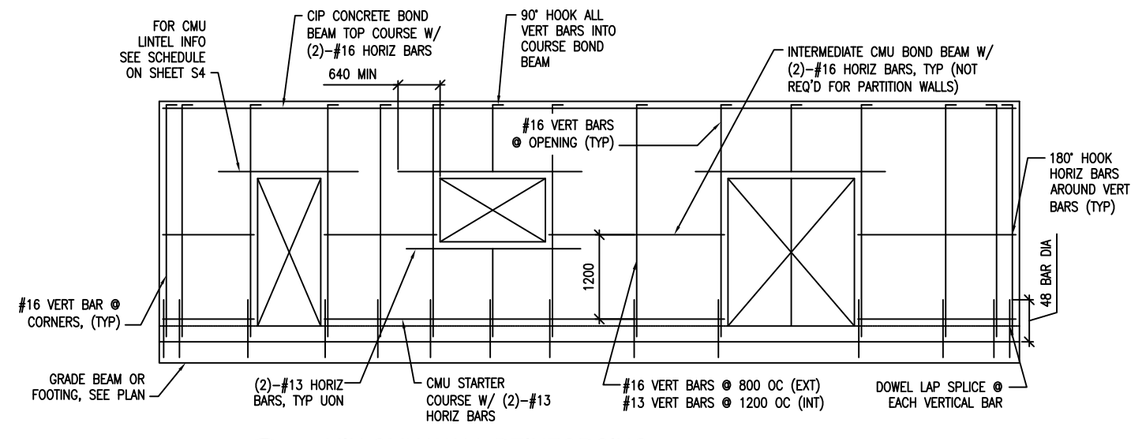

7/S12 MIN CMU WALL REINFORCING

SCALE: NTS

LINTEL NOTES:

CMU LINTEL REINFORCEMENT AS PER SCHEDULE ON SHEET S4

UNLESS OTHERWISE NOTED, LINEAR DIMENSIONS SHOWN ARE IN MILLIMETERS (MM)

US Army Corps of Engineers
Afghanistan Engineer District

SYMBOL	DESCRIPTION	DATE	APR

DESIGNED BY: W.L.J
DATE: 09-30-09
DWN BY: RCG
SUBMITTED BY: BAKER
CHK BY: CWW
FILE NO.: ANPSDS-509XXX

Michael Baker Jr., Inc
A unit of Michael Baker Corporation
Airside Business Park
100 Airside Drive
Moon Township PA 15108
www.mbakercorp.com

STANDARD DESIGN
TRAINING BUILDING
WOOD FIRED HEAT OPTION

TYPICAL DETAILS

SHEET REFERENCE NUMBER:
S9

100% SUBMISSION

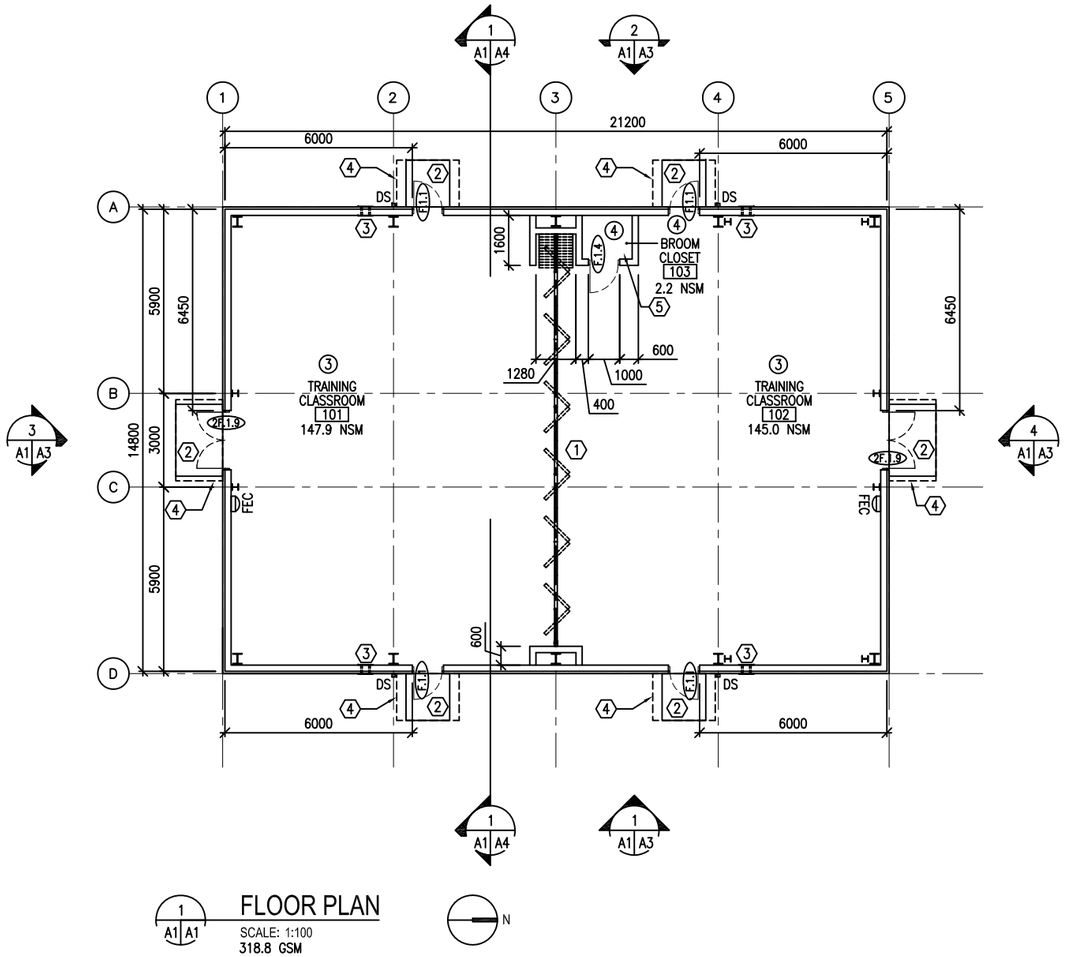

1 A1 A1 FLOOR PLAN

SCALE: 1:100

318.8 GSM

N

ROOM FINISHES: (X)

3.	WALLS:	METAL LINER PANEL ABOVE PAINTED PLASTER
	FLOOR:	SEALED CONCRETE
	CEILING:	METAL LINER PANEL
4.	WALLS:	PAINTED PLASTER
	FLOOR:	SEALED CONCRETE
	CEILING:	EXPOSED METAL DECK

GENERAL NOTES:

A. INTERIOR PARTITIONS ARE 3000 MM HIGH. INTERIOR PARTITIONS SHALL BE 200 MM CMU UNLESS OTHERWISE NOTED.

B. OPENINGS FOR DOORS SHALL BE LOCATED A MINIMUM OF 200 MM FROM THE ADJACENT WALL.

C. SURFACES TO BE PAINTED SHALL BE CLEAN AND FREE OF FOREIGN MATTER BEFORE APPLICATION OF PAINT. CLEANING SHALL BE SCHEDULED SO THAT DUST AND OTHER CONTAMINANTS WILL NOT FALL ON WET, NEWLY PAINTED SURFACES.

D. CONCRETE AND INTERIOR MASONRY SURFACES GROUTED SOLID SHALL BE ALLOWED TO DRY AT LEAST 30 DAYS BEFORE PAINTING EXCEPT CONCRETE SLAB ON GRADE WHICH SHALL BE ALLOWED TO CURE 90 DAYS BEFORE PAINTING.

E. PAINTS CONTAINING LEAD IN EXCESS OF 0.06 PERCENT BY WEIGHT OF THE TOTAL NONVOLATILE CONTENT SHALL NOT BE USED.

F. MERCURIAL FUNGICIDES SHALL NOT BE USED IN OIL-BASE PAINT.

G. REMOVE LOOSE DIRT AND CLEAN SURFACES BEFORE PAINTING. APPLY PAINT TO INTERIOR STRUCTURAL RIGID FRAMINGS AND CEILINGS AND TEST FOR ADHESION. PRIMER COAT FOR MASONRY. INITIAL FIRST COAT WITH AN ACRYLIC LATEX PAINT FOR EXTERIOR SURFACES AND A SECOND COAT WITH A WATER REPELLENT ACRYLIC LATEX PAINT.

H. METAL DOORS AND FRAMES SHALL RECEIVE A PRIMER COAT PLUS TWO COATS OF PAINT.

I. DIMENSIONS ARE TO STRUCTURAL COLUMN GRID, EDGE OF WINDOW OPENINGS, AND TO HINGE SIDE OF DOOR OPENINGS.

KEY NOTES: (X)

1. OPERABLE PARTITION – RE: DETAIL 7/A5
2. CONCRETE STOOP – RE: DETAIL 2/A5
3. TWO-PIECE WALL THIMBLE AND TRIM PLATE FOR OPTIONAL WOOD BURNING STOVE CHIMNEY PIPE. STOVE AND PIPE BY OTHERS.
4. LINE OF CANOPY ABOVE – RE: DETAILS ON A6
5. SEE STRUCTURAL FOR CONCRETE CEILING DETAILS

LEGEND:

F.1.4	DOOR TYPE, SEE SHEET A5
(X)	KEY NOTE
FEC	FIRE EXTINGUISHER CABINET
(1)	ROOM FINISH TYPE

UNLESS OTHERWISE NOTED, LINEAR DIMENSIONS SHOWN ARE IN MILLIMETERS (MM)

0 2000 4000 8000

SCALE: 1: 100

US Army Corps of Engineers

Afghanistan Engineer District

SYMBOL	DESCRIPTION	DATE	APR

DESIGNED BY: KRC	DATE: 09-30-09	
DWN BY: PFF	SUBMITTED BY: BAKER	
CHK BY: NLJ	FILE NO.: ANPSDA-101XXX	

Michael Baker Jr., Inc
A unit of Michael Baker Corporation
Airside Business Park
100 Airside Drive
Moon Township PA 15108
www.mbakercorp.com

STANDARD DESIGN
TRAINING BUILDING
WOOD FIRED HEAT OPTION

FLOOR PLAN

SHEET REFERENCE NUMBER:
A1

100% SUBMISSION

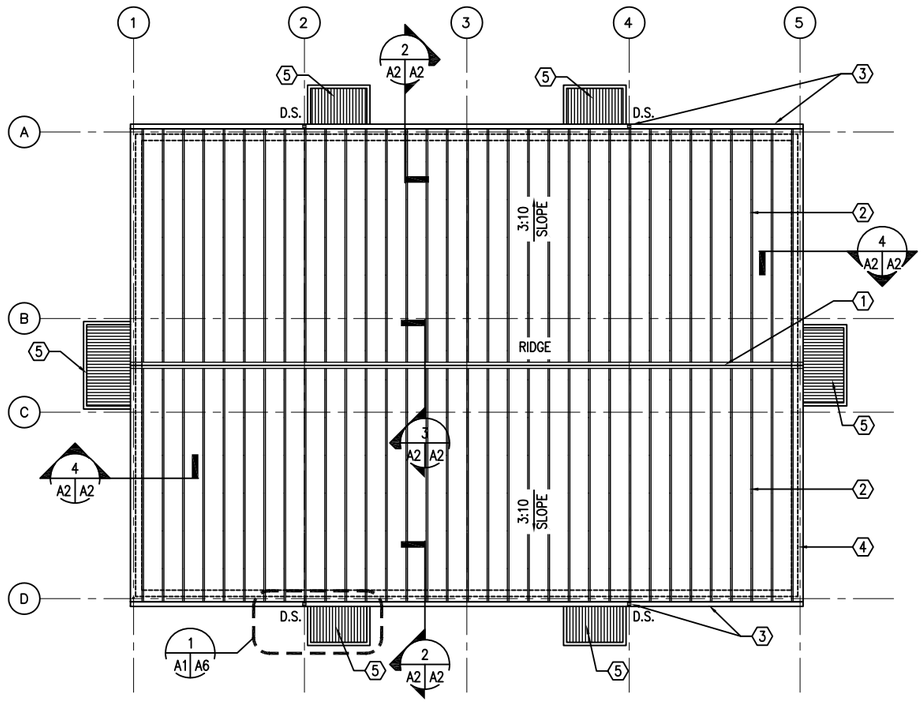

1 A2 A2 ROOF PLAN
SCALE: 1:100

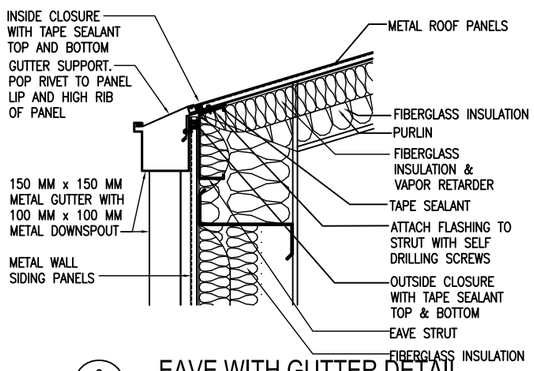

2 A2 A2 EAVE WITH GUTTER DETAIL
SCALE: 1:10

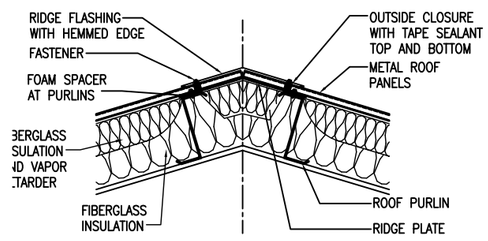

3 A2 A2 RIDGE DETAIL
SCALE: 1:10

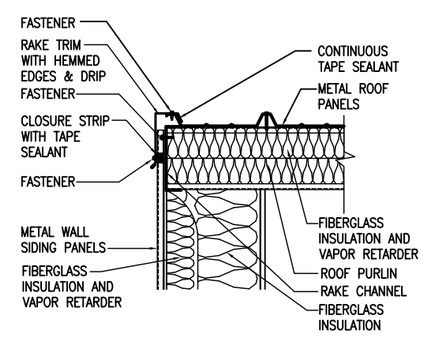

4 A2 A2 RAKE DETAIL
SCALE: 1:10

ROOF PLAN NOTES:

1. THE CONTRACTOR SHALL SIZE THE GUTTER, DOWNSPOUT AND SPLASHBLOCKS PER REQUIREMENTS OF THE INTERNATIONAL PLUMBING CODE TO ACCOMMODATE A MAXIMUM 50 MILLIMETER PER HOUR RAINFALL.
2. PRODUCTS BY METAL BUILDING MANUFACTUER:
   A. PRE-FINISHED METAL ROOF PANELS.
   B. STEEL PURLINS
   C. VINYL FACED FIBERGLASS INSULATION.
   D. ACCESSORIES.
   E. GUTTERS, DOWNSPOUTS AND SUPPORTS.
3. ROOFING INSTALLATION SHALL BE CONTINUOUS WITH ALL OPERATIONS PROCEEDING TOGETHER. BEFORE CESSATION OF WORK ON EACH WORKING DAY OR WHEN WORK IS INTERRUPTED DUE TO RAINFALL OR OTHER CAUSES, THE ROOF SHALL BE SEALED AGAINST WATER INTRUSION.

KEY NOTES: (X)

1. CONTINUOUS RIDGE FLASHING
2. METAL ROOF PANELS OVER STEEL PURLINS WITH VINYL FACED FIBERGLASS INSULATION BY METAL BUILDING MANUFACTURER.
3. METAL GUTTERS AND DOWNSPOUT BY METAL BUILDING MANUFACTURER.
4. LINE OF BUILDING WALL BELOW.
5. METAL CANOPY – RE: SHEET A6.

UNLESS OTHERWISE NOTED, LINEAR DIMENSIONS SHOWN ARE IN MILLIMETERS (MM)

0 200 400 800
SCALE: 1: 10

0 2000 4000 8000
SCALE: 1: 100

US Army Corps of Engineers
Afghanistan Engineer District

SYMBOL	DESCRIPTION	DATE	APR

DESIGNED BY: KRC
DATE: 09-30-09
DWN BY: PFF
SUBMITTED BY: BAKER
CHK BY: NLJ
FILE NO.: ANPSDA-102XXX

Michael Baker Jr., Inc.
A unit of Michael Baker Corporation
Airside Business Park
100 Airside Drive
Moon Township PA 15108
www.mbakercorp.com

STANDARD DESIGN
TRAINING BUILDING
WOOD FIRED HEAT OPTION

ROOF PLAN AND DETAILS

SHEET REFERENCE NUMBER:
A2

100% SUBMISSION

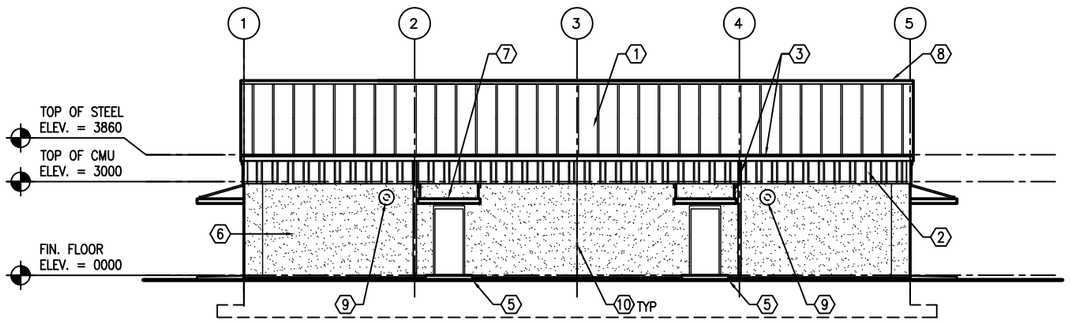

1 A1 A3 EAST ELEVATION
SCALE: 1:100

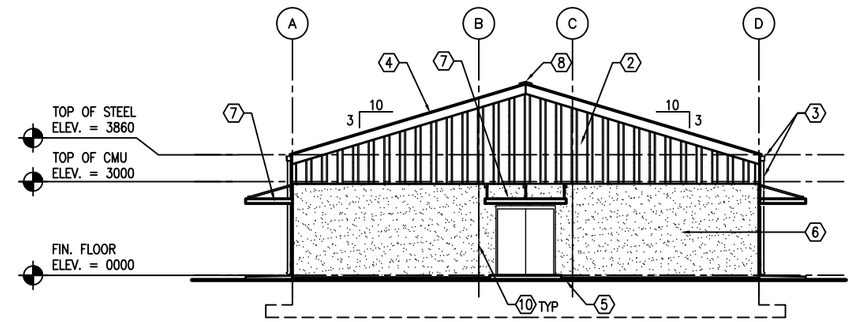

3 A1 A3 SOUTH ELEVATION
SCALE: 1:100

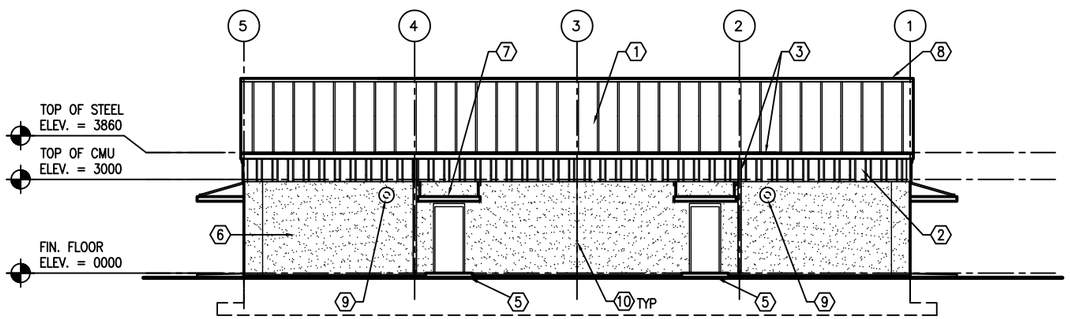

2 A1 A3 WEST ELEVATION
SCALE: 1:100

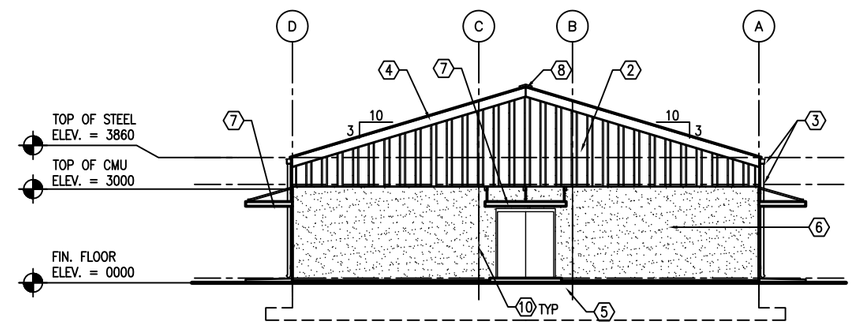

4 A1 A3 NORTH ELEVATION
SCALE: 1:100

KEY NOTES: (X)

1. PRE-FINISHED METAL ROOF PANELS BY METAL BUILDING MANUFACTURER.
2. PRE-FINISHED METAL WALL PANELS BY METAL BUILDING MANUFACTURER.
3. METAL GUTTERS AND DOWNSPOUTS BY METAL BUILDING MANUFACTURER, TYPICAL
4. RAKE TRIM BY METAL BUILDING MANUFACTURER
5. CONCRETE STOOP – RE: DETAIL A5
6. STUCCO AND RIGID INSULATION SYSTEM OVER CMU.
7. METAL CANOPY
8. CONTINUOUS RIDGE FLASHING
9. 275 MM SLEEVE THROUGH WALL WITH CAP FOR FUTURE WOOD BURNING STOVE. MOUNT SLEEVE 2400 MM ABOVE FINISH FLOOR. STOVE BY OTHERS.
10. CMU CONTROL JOINT, TYPICAL.

GENERAL NOTES:

1. COORDINATE SIZE AND LOCATION OF OPENINGS FOR MECHANICAL ITEMS WITH MECHANICAL DRAWINGS.
2. PROVIDE STRUCTURAL LINTELS AS REQUIRED – RE: STRUCT.
3. PROVIDE CMU CONTROL JOINT AT EACH STEEL COLUMN – RE: DETAIL 6/A4.

UNLESS OTHERWISE NOTED, LINEAR DIMENSIONS SHOWN ARE IN MILLIMETERS (MM)

0 2000 4000 8000
SCALE: 1: 100

US Army Corps of Engineers
Afghanistan Engineer District

SYMBOL	DESCRIPTION	DATE	APR

DESIGNED BY: KRC
DWN BY: PFF
CHK BY: NLJ
DATE: 09-30-09
SUBMITTED BY: BAKER
FILE NO.: ANPSDA-203XXX

Michael Baker Jr., Inc.
A unit of Michael Baker Corporation
Airside Business Park
100 Airside Drive
Moon Township PA 15108
www.mbakercorp.com

STANDARD DESIGN
TRAINING BUILDING
WOOD FIRED HEAT OPTION

EXTERIOR ELEVATIONS

SHEET REFERENCE NUMBER:
A3

100% SUBMISSION

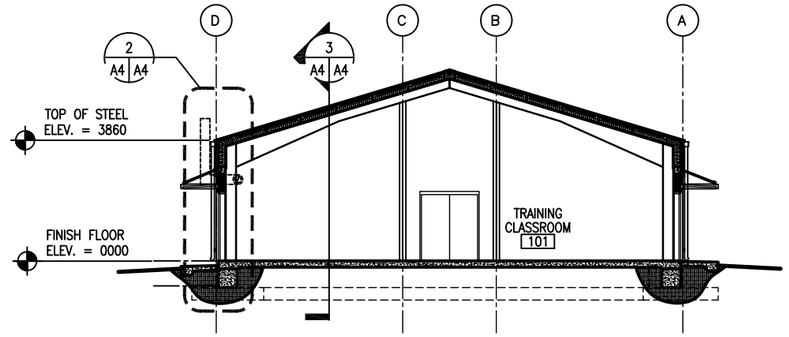

1 A1 A4 BUILDING SECTION
SCALE: 1:100

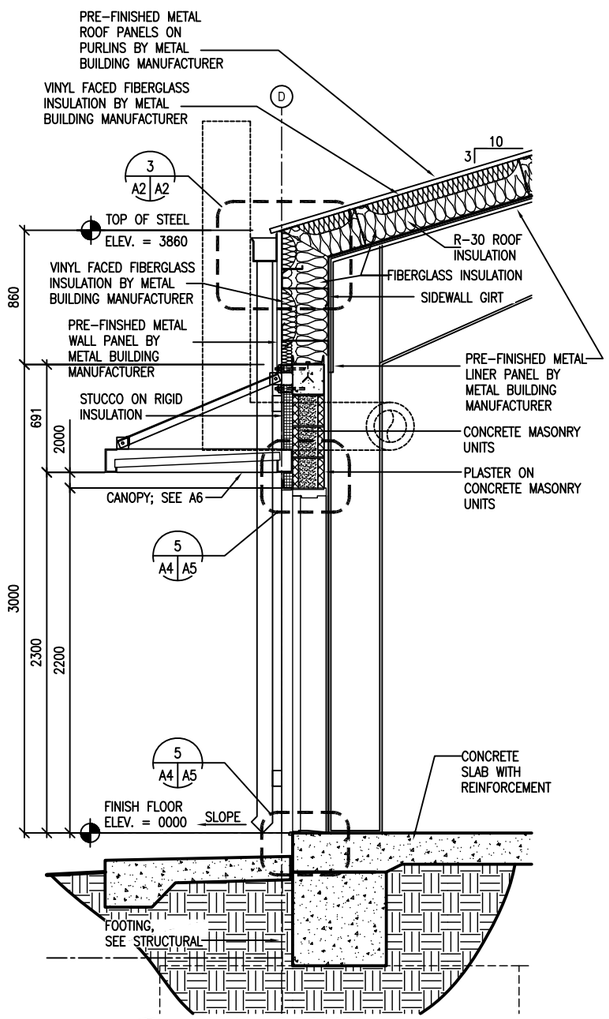

2 A4 A4 WALL SECTION
SCALE: 1:20

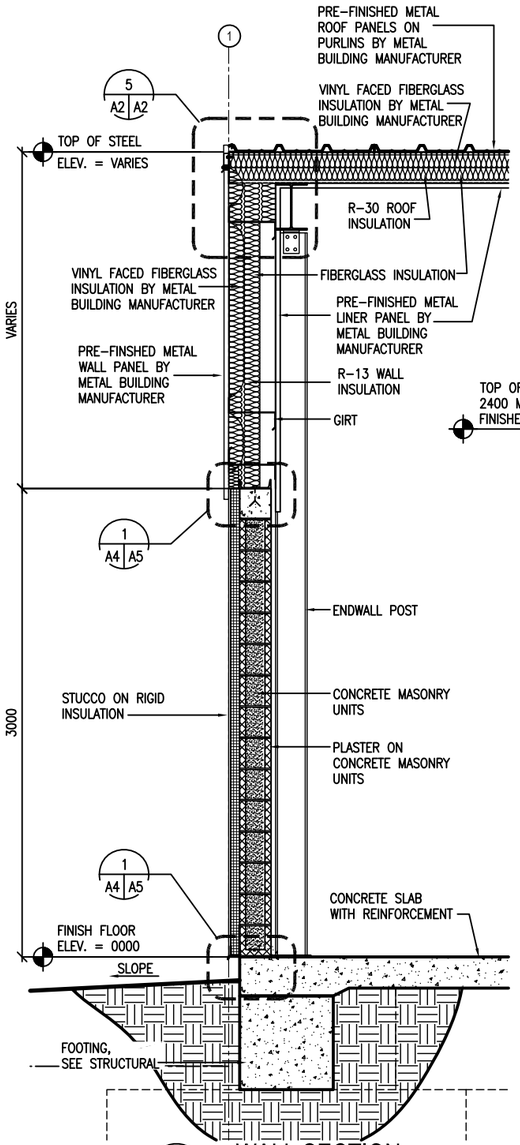

3 A4 A4 WALL SECTION
SCALE: 1:20

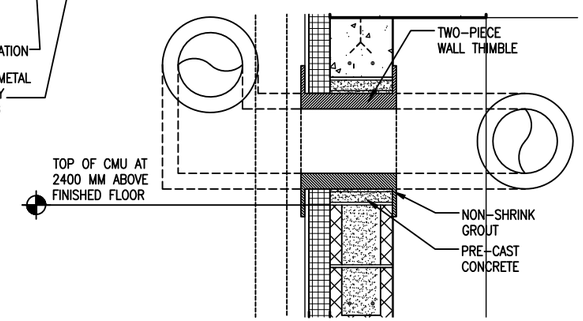

4 A4 A4 THIMBLE DETAIL, TYPICAL
SCALE: 1:10

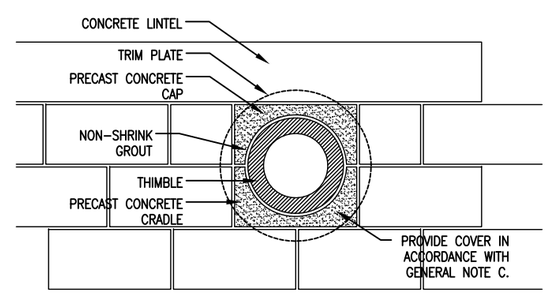

5 A4 A4 THIMBLE DETAIL, TYPICAL
SCALE: 1:10

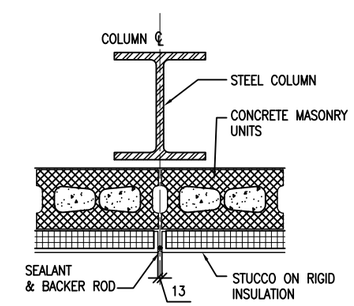

6 A4 A4 TYPICAL CMU CONTROL JOINT
SCALE: 1:10

GENERAL NOTES:

A. COORDINATE SIZE AND LOCATION OF OPENINGS FOR MECHANICAL ITEMS WITH MECHANICAL DRAWINGS.
B. PROVIDE STRUCTURAL LINTELS AS REQUIRED – RE: STRUCT
C. PROVIDE 480 MM SQUARE, 1.5 MM THICK GALVANIZED SHEET METAL COVER WITH 13 MM HEMMED EDGE FOR WALL THIMBLE UNTIL STOVE PIPE IS PROVIDED. INSTALL COVER ON EXTERIOR FACE OF THIMBLE TRIM PLATE. COVER SHALL BE SET IN SILICONE SEALANT AND FASTENED WITH 4 STAINLESS STEEL SCREWS. ALIGN FASTENER LOCATIONS WITH COVER PLATE FASTENER OPENINGS SO ADDITIONAL FASTENER PENETRATIONS ARE NOT CREATED IN EXTERIOR FINISH.

UNLESS OTHERWISE NOTED, LINEAR DIMENSIONS SHOWN ARE IN MILLIMETERS (MM)

0 200 400 800
SCALE: 1: 10

0 400 800 1600
SCALE: 1: 20

0 2000 4000 8000
SCALE: 1: 100

US Army Corps of Engineers
Afghanistan Engineer District

SYMBOL	DESCRIPTION	DATE	APR

DESIGNED BY: KRC
DATE: 09-30-09
DWN BY: PFF
SUBMITTED BY: BAKER
CHK BY: NLJ
FILE NO.: ANPSDA-304XXX

Michael Baker Jr., Inc.
A unit of Michael Baker Corporation
Airside Business Park
100 Airside Drive
Moon Township PA 15108
www.mbakercorp.com

STANDARD DESIGN
TRAINING BUILDING
WOOD FIRED HEAT OPTION
BUILDING & WALL SECTIONS

SHEET REFERENCE NUMBER:
A4

100% SUBMISSION

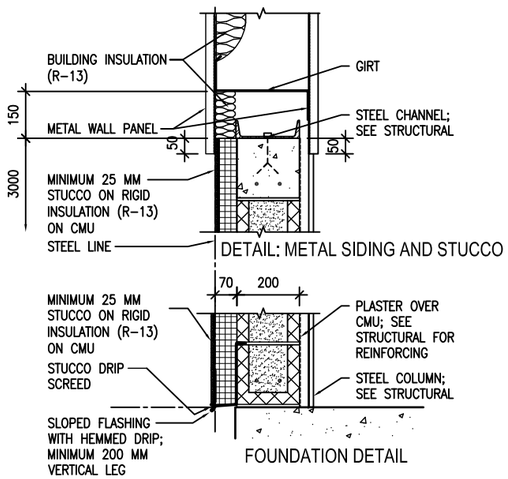

1 A5 A5 EXTERIOR STUCCO DETAILS

SCALE: 1:10

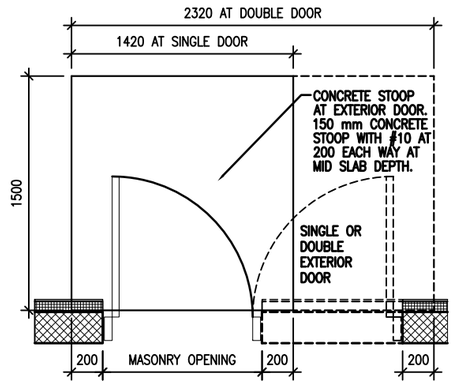

2 A5 A5 CONCRETE STOOP DETAILS

SCALE: 1:10

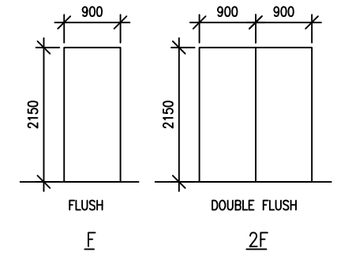

3 A5 A5 DOOR TYPES

SCALE: 1:50

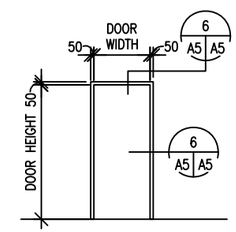

4 A5 A5 FRAME TYPE

SCALE: 1:50

DOOR TYPES NOTES:

1. INTERIOR AND EXTERIOR METAL DOORS AND FRAME COLORS SHALL MATCH ADJACENT WALL COLORS AS SELECTED BY THE CONTRACTING OFFICER.
2. HARDWARE SHALL BE HEAVY DUTY, COMMERCIAL GRADE, STAINLESS STEEL WITH A MATTE FINISH.
3. FRAMES, EXCEPT FIRE-RATED FRAMES, SHALL BE MOUNTED AND ADJUSTED IN ACCORDANCE WITH MANUFACTURER'S INSTRUCTIONS. FRAMES SHALL BE FASTENED WITH MINIMUM OF THREE FASTENING POINTS PER SIDE AT REGULAR INTERVALS.
4. DIMENSIONS SHOWN ON DOOR SCHEDULE ARE BASED UPON MODULAR MASONRY (OR ROUGH OPENING), HEIGHT OF 2200mm FOR STANDARD PERSONNEL DOORS. CONTRACTOR SHALL COORDINATE WITH DOOR SUPPLIER TO ENSURE THAT DIMENSIONS OF DOORS AND FRAMES PROVIDED ARE COMPATIBLE WITH DOOR OPENING DIMENSIONS.

HARDWARE TYPES:

HW-1 1-1/2 PR HINGES
1 EA EXIT DEVICE, SURFACE MOUNTED F08
1 EA CYLINDER, GRADE 1
1 EA DOOR CLOSER, C02061,LOW RESISTANCE
1 EA THRESHOLD J32130

HW-4 1-1/2 PR HINGES
1 EA LOCKSET W/LEVERS. GRADE 1
1 EA STOP L02101 OR L02161

HW-9 3 PR HINGES
2 EA EXIT DEVICE, SURFACE MOUNTED F08
2 EA CYLINDER. GRADE 1
2 EA DOOR CLOSER, C02061,LOW RESISTANCE
1 EA THRESHOLD J32130
1 EA REMOVEABLE MULLION
1 EA COORDINATOR

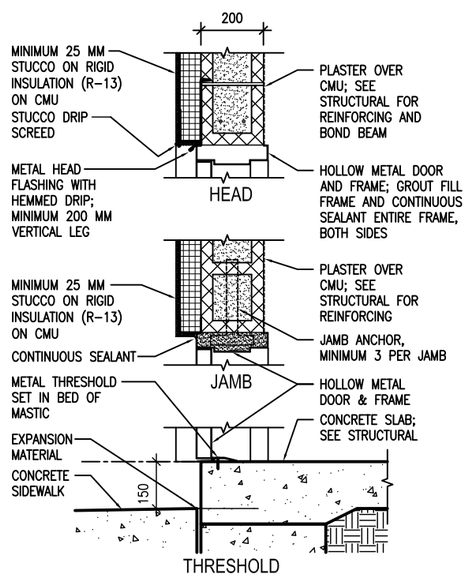

5 A5 A5 EXTERIOR DOOR DETAILS

SCALE: 1:10

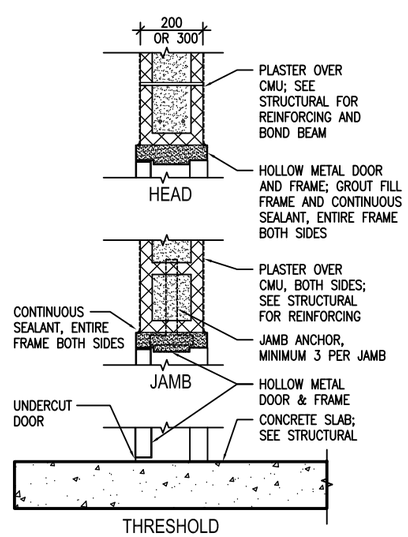

6 A5 A5 INTERIOR DOOR DETAILS

SCALE: 1:10

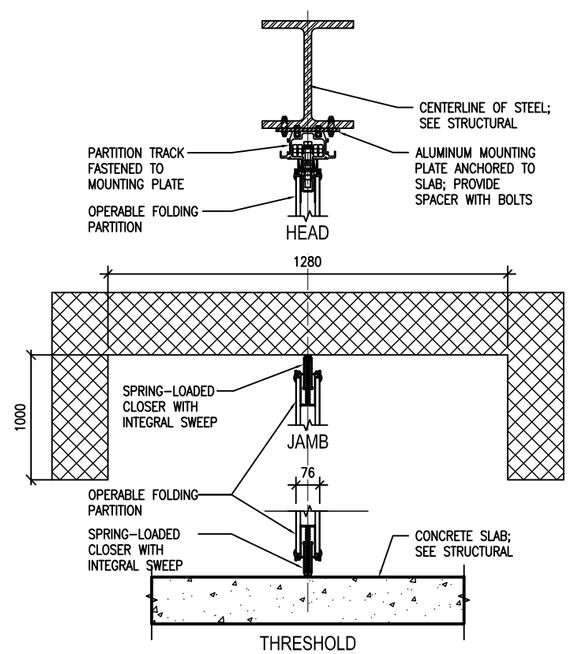

7 A5 A5 OPERABLE PARTITION DETAIL

SCALE: 1:10

UNLESS OTHERWISE NOTED, LINEAR DIMENSIONS SHOWN ARE IN MILLIMETERS (MM)

0 200 400 800
SCALE: 1: 10

0 400 800 1600
SCALE: 1: 20

0 1000 2000 4000
SCALE: 1: 50

US Army Corps of Engineers
Afghanistan Engineer District

SYMBOL	DESCRIPTION	DATE	APR

DESIGNED BY: KRC
DATE: 09-30-09
DWN BY: PFF
SUBMITTED BY: BAKER
CHK BY: NLJ
FILE NO.: ANPSDA-505XXX

Michael Baker Jr., Inc.
A unit of Michael Baker Corporation
Airside Business Park
100 Airside Drive
Moon Township PA 15108
www.mbakercorp.com

STANDARD DESIGN
TRAINING BUILDING
WOOD FIRED HEAT OPTION

DOOR, WINDOW & FINISH TYPES & DETAILS

SHEET REFERENCE NUMBER:
A5

100% SUBMISSION

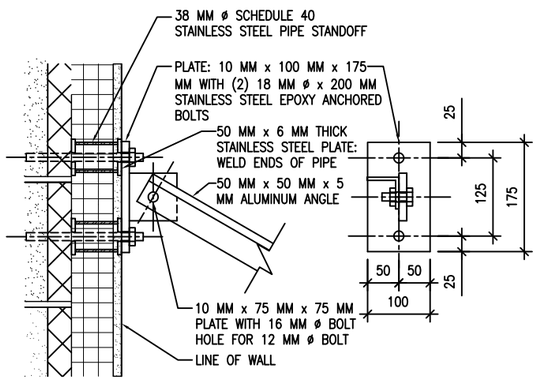

3 A6 A6 TOP CONNECTION DETAIL
SCALE: 1:5

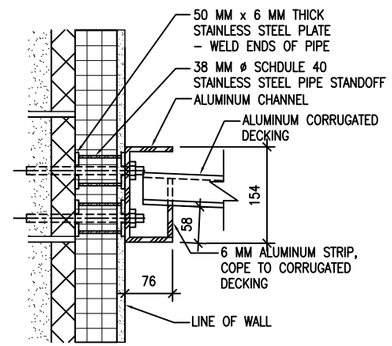

4 A6 A6 BOTTOM CONNECTION DETAIL
SCALE: 1:5

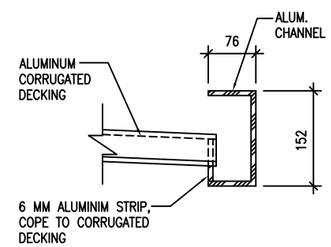

5 A6 A6 FRONT SECTION
SCALE: 1:5

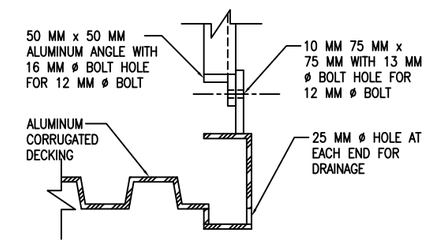

6 A6 A6 SIDE SECTION
SCALE: 1:5 1 AS SHOWN 1 OPP. HAND

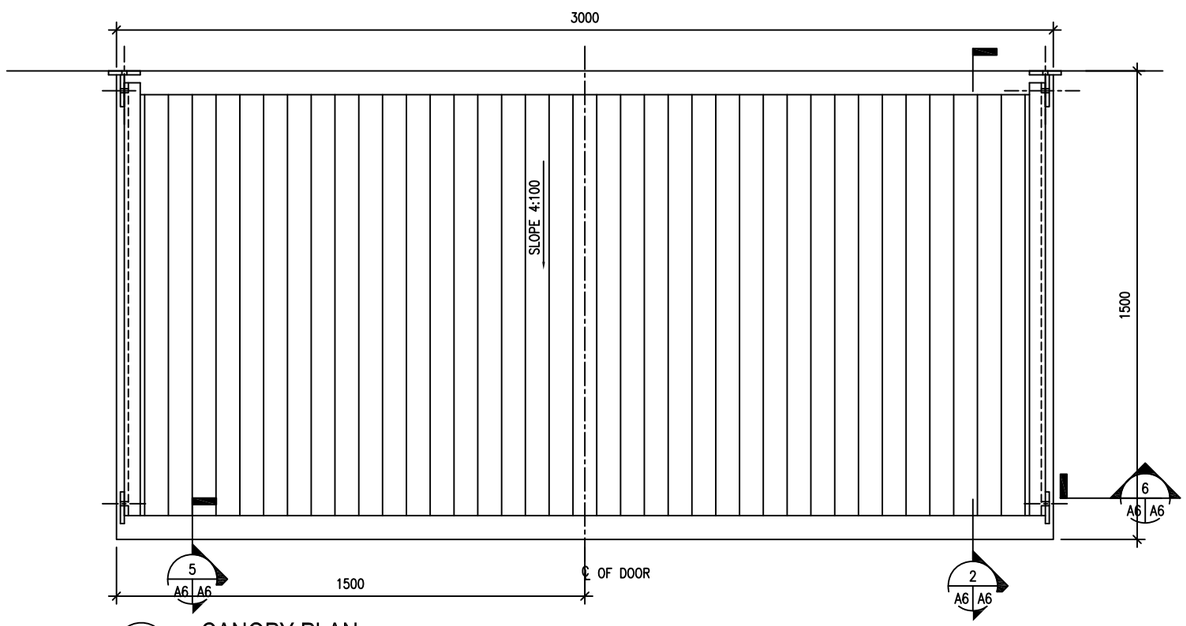

1 A2 A6 CANOPY PLAN
SCALE: 1:10

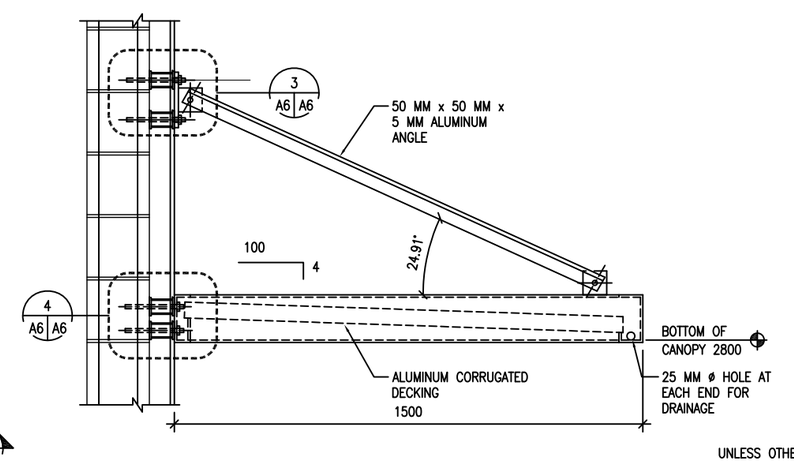

2 A6 A6 CANOPY SECTION
SCALE: 1:10

UNLESS OTHERWISE NOTED, LINEAR DIMENSIONS SHOWN ARE IN MILLIMETERS (MM)

0 100 200 400
SCALE: 1: 5

0 1000 2000 4000
SCALE: 1: 50

US Army Corps of Engineers
Afghanistan Engineer District

SYMBOL	DESCRIPTION	DATE	APR

DESIGNED BY: KRC	DATE: 09-30-09		
DWN BY: PFF	SUBMITTED BY: BAKER		
CHK BY: NLJ	FILE NO.: ANPSDA-506XXX		

Michael Baker Jr., Inc.
A unit of Michael Baker Corporation
Airside Business Park
100 Airside Drive
Moon Township PA 15108
www.mbakercorp.com

STANDARD DESIGN
TRAINING BUILDING
WOOD FIRED HEAT OPTION

MISCELLANEOUS DETAILS

SHEET REFERENCE NUMBER:
A6

100% SUBMISSION

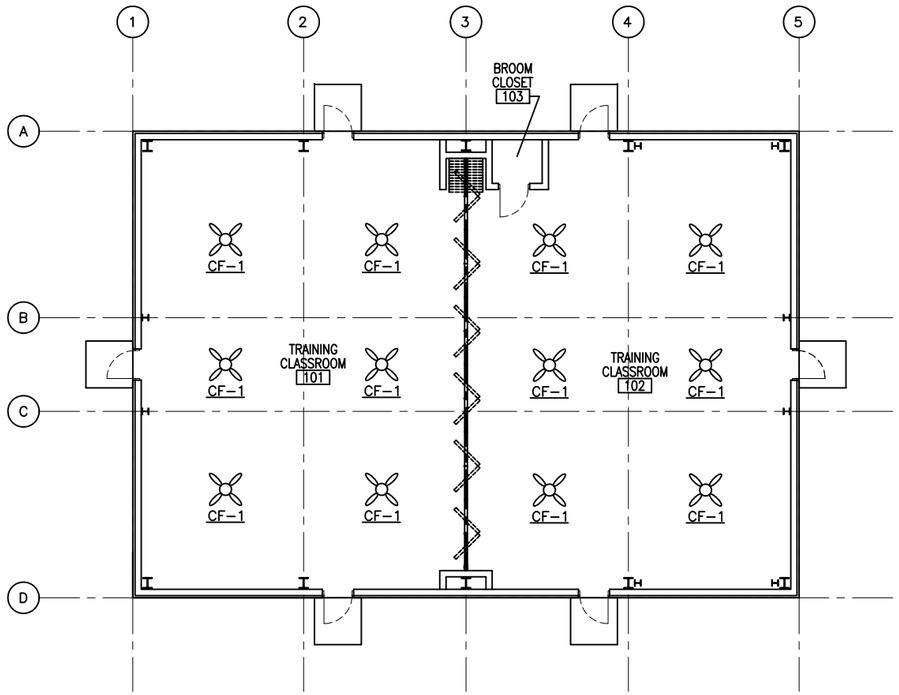

1 M1 M1 FLOOR PLAN - HVAC

SCALE: 1:100

N

GENERAL NOTES:

1. DO NOT SCALE DRAWINGS – ALL DIMENSIONS AND CONDITIONS SHALL BE CHECKED AND VERIFIED BY THE CONTRACTOR AT THE SITE.
2. ALL WORK PERFORMED ON THIS BUILDING SHALL BE IN COMPLIANCE WITH ALL PERTINENT CODES, RULES, ORDINANCES AND REGULATIONS OF THE GOVERNING AUTHORITIES.
3. ALL WORK PERFORMED UNDER AND IN CONNECTION WITH THESE DRAWINGS AND SPECIFICATIONS SHALL BE IN STRICT COMPLIANCE WITH THE LATEST SAFETY AND HEALTH STANDARDS.

CEILING FAN

NO.	BLADE SIZE mm	BLADE SIZE IN	VOLTAGE	SWITCH
CF-1	1320	52	220/1/50	WALL

NOTES:
1. FINAL ELECTRICAL CONNECTIONS BY EC.

US Army Corps of Engineers
Afghanistan Engineer District

SYMBOL	DESCRIPTION	DATE	APR

DESIGNED BY: RML
DATE: 09-30-09
DWN BY: JJN
SUBMITTED BY: BAKER
CHK BY: CJM
FILE NO.: ANPSDM-101XXX

Michael Baker Jr., Inc.
A unit of Michael Baker Corporation
Airside Business Park
100 Airside Drive
Moon Township PA 15108
www.mbakercorp.com

STANDARD DESIGN
TRAINING BUILDING
WOOD FIRED HEAT OPTION

FLOOR PLAN - HVAC

SHEET REFERENCE NUMBER:
M1

100% SUBMISSION

GENERAL NOTES:

1. REFER TO DRAWING #E0 FOR THE ELECTRICAL SYMBOLS LIST.
2. REFER TO DRAWING #E3 FOR THE POWER RISER.
3. REFER TO DRAWING #E5 FOR PANEL SCHEDULES.
4. COORDINATE EXACT MOUNTING LOCATION OF DISCONNECTING MEANS FOR MECHANICAL AND PLUMBING EQUIPMENT IN THE FIELD.
5. FUSIBLE SAFETY SWITCHES THAT ARE NOT OTHERWISE IDENTIFIED SHALL BE 380V, 1P, 30A FUSED SAFETY SWITCHES WITH 20A FUSES.

NUMBERED NOTES:

1. PANEL C1.

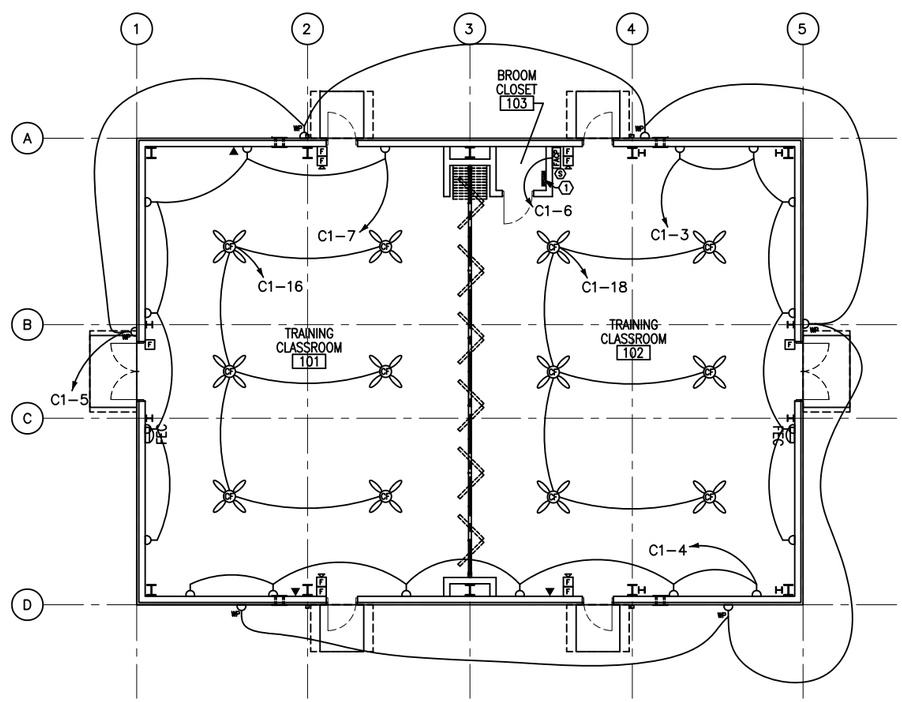

1 E2 E2 POWER AND SYSTEMS PLAN

SCALE: 1:100

N

US Army Corps of Engineers

Afghanistan Engineer District

SYMBOL	DESCRIPTION	DATE	APR

DESIGNED BY: JRG
DATE: 09-30-09
DWN BY: JRG
SUBMITTED BY: BAKER
CHK BY: JRG
FILE NO.: ANPSDE-102XXX

Michael Baker Jr., Inc
A unit of Michael Baker Corporation
Airside Business Park
100 Airside Drive
Moon Township PA 15108
www.mbakercorp.com

STANDARD DESIGN
TRAINING BUILDING
WOOD FIRED HEAT OPTION

POWER AND SYSTEMS PLAN

SHEET REFERENCE NUMBER:
E2

100% SUBMISSION

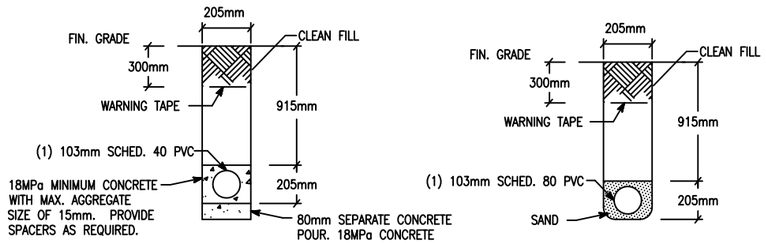

NOTE: PVC CONDUIT SHALL BE DIRECT BURIED SCHEDULE 80 FOR NO TRAFFIC AREAS AND CONCRETE-ENCASED SCHEDULE 40 FOR UNDER ROADWAYS OR TRAFFIC AREAS.

1 E3 E3 TYPICAL DUCT BANK DETAILS FOR CONDUIT IN SAND OR CONCRETE

SCALE: N.T.S.

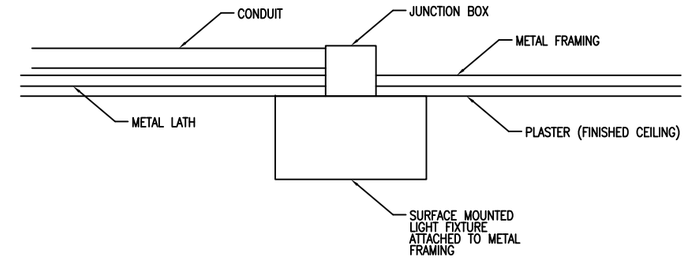

2 E3 E3 TYPICAL DETAIL FOR SURFACE MOUNTED LIGHT FIXTURES

SCALE: N.T.S.

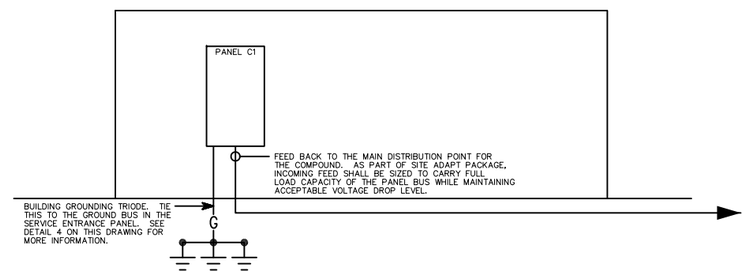

3 E3 E3 TRAINING RISER DIAGRAM

SCALE: N.T.S.

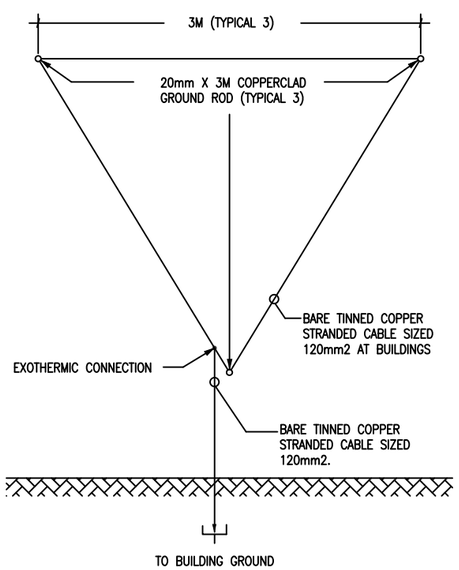

4 E3 E3 GROUND TRIPOD SYSTEM DETAIL - PLAN

SCALE: N.T.S.

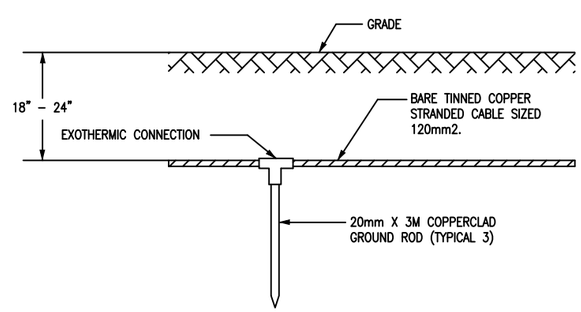

5 E3 E3 GROUND TRIPOD SYSTEM DETAIL - ELEVATION

SCALE: N.T.S.

US Army Corps of Engineers
Afghanistan Engineer District

SYMBOL	DESCRIPTION	DATE	APR

DESIGNED BY: JRG
DATE: 09-30-09
DWN BY: JRG
SUBMITTED BY: BAKER
CHK BY: JRG
FILE NO.: ANPSDE-503XXX

Michael Baker Jr., Inc.
A unit of Michael Baker Corporation
Airside Business Park
100 Airside Drive
Moon Township PA 15108
www.mbakercorp.com

STANDARD DESIGN
TRAINING BUILDING
WOOD FIRED HEAT OPTION

DETAILS

SHEET REFERENCE NUMBER:
E3

100% SUBMISSION

FIXTURE MARK 'A'

PARABOLIC SURFACE/PENDANT MOUNTED 300MM x 1200MM FLUORESCET FIXTURE WITH ELECTRONIC BALLAST.

FIXTURE MARK 'A2':
SAME FIXTURE AS 'A' WITH EMERGENCY BALLAST.

FIXTURE MARK 'C'

INCANDESCENT ONE PIECE WITH APPROVED LENS, STABILIZED HIGH IMPACT POLY CARBONATE

FIXTURE MARK 'H'

REMOTE HEAD EXTERIOR LIGHT HEAD POWERED FROM EXIT SIGN BATTERY– 12V DOUBLE HEAD CORROSION RESISTANT WITH UL34 WEATHERPROOF CONSTRUCTION

FIXTURE MARK 'E'

UNIVERSAL MOUNT ENGINEER GRADE THERMOPLASTIC HOUSING EXIT SIGN WITH LED LAMPS, RED LETTERS 6" IN HEIGHT WITH ARROWS AS INDICATED, WITH 12V CADMIUM BATTERY

LIGHTING FIXTURE SCHEDULE

FIXTURE MARK	STYLE NUMBER AND TYPE	NUMBER AND TYPE OF LAMPS	VOLTAGE	MOUNTING	NOTES
A	PARABOLIC SURFACE/PENDANT MOUNTED 300MM X 1200MM FLUORESCENT FIXTURE WITH ELECTRONIC BALLAST	(2) 32W 3500K	220V – 1ø 50HZ	PENDANT MOUNTED FROM SLOPED CEILINGS	FURNISHED WITH ELECTRONIC BALLAST. PARABOLIC LOUVER SHALL BE SPECULAR LENS IRADESCENCE TYPE.
A2	SAME AS FIXTURE 'A' WITH EMERGENCY BALLAST	(2) 32W 3500K	220V – 1ø 50HZ	PENDANT MOUNTED FROM SLOPED CEILINGS	FURNISHED WITH ELECTRONIC BALLAST. PARABOLIC LOUVER SHALL BE SPECULAR LENS IRADESCENCE TYPE. EMERGENCY BALLAST SELF TEST.
C	INCANDESCENT ONE PIECE W/ APPROVED LENS STABILIZED HIGH IMPACT POLY CARBONATE.	(1) A19 – 100W INCANDESCENT	220V – 1ø 50HZ	WALL MOUNTED ABOVE EXTERIOR DOORS	
H	REMOTE HEAD EXTERIOR LIGHT HEAD POWERED FROM EXIT SIGN BATTERY– 12V DOUBLE HEAD CORROSION RESISTANT WITH UL34 WEATHERPROOF CONSTRUCTION	(2) 12W/12V HALOGEN LAMP	12V – 1ø 50HZ	EXTERIOR WALL MOUNTED AT TOP OF DOOR HEIGHT	
E	UNIVERSAL MOUNT ENGINEER GRADE THERMOPLASTIC HOUSING EXIT SIGN WITH LED LAMPS, RED LETTERS 6" IN HEIGHT WITH ARROWS AS INDICATED, WITH 12V CADMIUM BATTERY WITH REMOTE HEAD CAPABILITY	LED LAMPS	220V – 1ø 50HZ	UNIVERSAL MOUNTING	

US Army Corps of Engineers
Afghanistan Engineer District

SYMBOL	DESCRIPTION	DATE	APR

DESIGNED BY: JRG
DATE: 09-30-09
DWN BY: JRG
SUBMITTED BY: BAKER
CHK BY: JRG
FILE NO.: ANPSDE-604XXX

Michael Baker Jr., Inc
A unit of Michael Baker Corporation
Airside Business Park
100 Airside Drive
Moon Township PA 15108
www.mbakercorp.com

STANDARD DESIGN
TRAINING BUILDING
WOOD FIRED HEAT OPTION

LIGHT FIXTURE SCHEDULE

SHEET REFERENCE NUMBER:
E4

100% SUBMISSION

PANELBOARD C1 SURFACE MOUNTED _____ ASYM. A.I.C. MIN.
AMP. MAIN LUGS (OR) 100 AMP. MAIN BREAKER W/ 100 AMP. TRIP
CIRCUIT BREAKER TYPE 380/220 VOLTS 1 PHASE 3 WIRE 50 HZ 100 AMP. BUS

CKT. NO.	TRIP AMPS	NO. POLES	WIRE MM ²	GND MM ²	CONDUIT MM	LOAD SERVED	LOAD-V.A. A0	LOAD-V.A. B0	LOAD-V.A. A0	LOAD-V.A. B0	LOAD SERVED	CONDUIT MM	GND MM ²	WIRE MM ²	NO. POLES	TRIP AMPS	CKT. NO.
1	20	1	4.0	4.0	20	LIGHTING – 101	1.5		1.5		LIGHTING – 102	20	4.0	4.0	1	20	2
3	20	1	4.0	4.0	20	RECEPTACLES – 102		1.2		1.2	RECEPTACLES – 101, 102	20	4.0	4.0	1	20	4
5	20	1	4.0	4.0	20	RECEPTACLES – EXTERIOR	1.2		0.5		F.A.C.P.	20	4.0	4.0	1	20	6
7	20	1	4.0	4.0	20	RECEPTACLES – 101		1.2			SPARE				1	20	8
9	20	1				SPARE					SPARE				1	20	10
11	20	1				SPARE					SPARE				1	20	12
13	20	1				SPARE					SPARE				1	20	14
15	20	1				SPARE				1.2	CEILING FANS	20	4.0	4.0	1	20	16
17	20	1				SPARE			1.2		CEILING FANS	20	4.0	4.0	1	20	18
19	20	1				SPARE					SPARE				1	20	20
21	20	1				SPARE					SPARE				1	20	22
23	20	1				SPARE					SPARE				1	20	24
25	20	1				SPARE					SPARE				1	20	26
27	20	1				SPARE					SPARE				1	20	28
29	20	1				SPARE					SPARE				1	20	30
31	20	1				SPARE					SPARE				1	20	32
33	20	1				SPARE					SPARE				1	20	34
35	20	1				SPARE					SPARE				1	20	36
37	20	1				SPARE					SPARE				1	20	38
39	20	1				SPARE					SPARE				1	20	40
41	20	1				SPARE					SPARE				1	20	42
							2.7	2.4	3.2	2.4							

TOTAL CONN. LOAD PER PHASE (KVA): A0 5.9 B0 4.8

TOTAL CONN. LOAD 10.7 KVA. 70 % DEMAND = ESTIMATED DEMAND LOAD 7.5 SUPPLIED FROM SWITCHGEAR MAIN DISTRIBUTION

* MAIN BREAKER SHALL BE 3P EARTH GROUND TYPE

US Army Corps of Engineers
Afghanistan Engineer District

SYMBOL	DESCRIPTION	DATE	APR

DESIGNED BY: JRG
DATE: 09-30-09
DWN BY: JRG
SUBMITTED BY: BAKER
CHK BY: JRG
FILE NO.: ANPSDE-605XXX

Michael Baker Jr., Inc
A unit of Michael Baker Corporation
Airside Business Park
100 Airside Drive
Moon Township PA 15108
www.mbakercorp.com

STANDARD DESIGN
TRAINING BUILDING
WOOD FIRED HEAT OPTION

PANEL SCHEDULES AND RISER DIAGRAM

SHEET REFERENCE NUMBER:
E5

100% SUBMISSION