AFGHAN NATIONAL POLICE

STANDARD BUILDING DESIGNS

SECURE STORAGE

SHEET INDEX

G1 COVER SHEET

S1 GENERAL NOTES
S2 DESIGN CRITERIA
S3 FOUNDATION PLAN
S4 ROOF FRAMING PLAN
S5 SECTIONS GENERAL NOTES
S6 TYPICAL DETAILS

A1 FLOOR AND ROOF PLANS
A2 EXTERIOR ELEVATIONS, BUILDING SECTIONS, AND WALL SECTIONS
A3 DOOR & WINDOW TYPES & DETAILS

M1 HVAC PLAN

E0 ELECTRICAL SYMBOLS AND ABBREVIATIONS
E1 LIGHTING AND POWER PLAN
E2 DETAILS
E3 LIGHT FIXTURE SCHEDULE
E4 PANEL SCHEDULES AND RISER DIAGRAM

US Army Corps of Engineers
Afghanistan Engineer District

SYMBOL	DESCRIPTION	DATE	APR

DESIGNED BY: JDS
DWN BY: JDS
CHK BY: JDS
DATE: 09-30-09
SUBMITTED BY: BAKER
FILE NO.: ANPSDG-001XXX

Michael Baker Jr., Inc
A unit of Michael Baker Corporation
Airside Business Park
100 Airside Drive
Moon Township, PA 15108
www.mbakercorp.com

AFGHAN NATIONAL POLICE
STANDARD DESIGN
SECURE STORAGE

COVER SHEET

SHEET REFERENCE NUMBER:
G1

100% SUBMISSION

STRUCTURAL ABBREVIATIONS:

ACI	AMERICAN CONCRETE INSTITUTE
AISC	AMERICAN INSTITUTE OF STEEL CONSTRUCTION
ALT	ALTERNATE
ASTM	AMERICAN SOCIETY FOR TESTING AND MATERIALS
AWS	AMERICAN WELDING SOCIETY
ARCH	ARCHITECTURAL
B	BOTTOM
BLDG	BUILDING
BOTT	BOTTOM
℄	CENTER LINE
CFMF	COLD FORM METAL FRAME
CFS	COLD FORMED STEEL
CIP	CAST IN PLACE
CIPL	CAST-IN-PLACE LINTEL
CJ	CONTROL JOINT
CLR	CLEAR
CMU	CONCRETE MASONRY UNIT
COEFF	COEFFICIENT
COL	COLUMN
CONC	CONCRETE
CONT	CONTINUOUS
COORD	COORDINATE
CSJ	CONSTRUCTION JOINT
CTJ	CONTROL JOINT
DIA	DIAMETER
DIAG	DIAGONAL
DIM	DIMENSION
DWG	DRAWING
DWL	DOWEL
EA	EACH
ELEC	ELECTRICAL
ELEV	ELEVATION
EMBED	EMBEDMENT
EQUIV	EQUIVALENT
ETC	ET CETERA
EW	EACH WAY
EXT	EXTERIOR
FTG	FOOTING
GA	GAUGE
HORIZ	HORIZONTAL
HRS	HOURS
IBC	INTERNATIONAL BUILDING CODE
INT	INTERIOR
Kg	KILOGRAM
KIP	KIPS (1 KIP = 1,000 POUNDS)
kN	KILONEWTON
kPa	KILOPASCAL
L#	ANGLE (# INDICATES SIZE)
LLV	LONG LEG VERTICAL
M	METER
MAX	MAXIMUM
MBM	METAL BUILDING MANUFACTURER
MECH	MECHANICAL
MFG	MANUFACTURER
MID	MIDDLE
MIN	MINIMUM
MISC	MISCELLANEOUS
MM	MILLIMETER
MPa	MEGAPASCAL
MTL	METAL
MWFRS	MAIN WIND FORCE RESISTING SYSTEM
N	NEWTON
N	NORTH
N/A	NOT APPLICABLE
#	NUMBER SYMBOL FOR REBAR SIZE
NTS	NOT TO SCALE
OC	ON CENTER
OPNG	OPENING
ℙ or PL	PLATE
PRE-ENG	PRE-ENGINEERED
REINF	REINFORCED
REQ'D	REQUIRED
SIM	SIMILAR
SPECS	SPECIFICATIONS
STD	STANDARD
STRUCT	STRUCTURAL
T	TOP
T/	TOP OF
T/ELEV	TOP ELEVATION
T&B	TOP AND BOTTOM
THK	THICK
TM	TRADE MARK
TYP	TYPICAL
UON	UNLESS OTHERWISE NOTED
VERT	VERTICAL
W	WIDTH
W/	WITH

GENERAL NOTES

1.0 THIS PROJECT HAS BEEN DESIGNED FOR THE WEIGHTS AND MATERIALS INDICATED ON THE SHEETS AND FOR THE LIVE LOADS INDICATED IN THE DESIGN DATA. IT IS THE CONTRACTOR'S RESPONSIBILITY TO DETERMINE ALLOWABLE CONSTRUCTION LOADS AND TO PROVIDE PROPER DESIGN AND CONSTRUCTION OF FALSEWORK, FORMWORK, STAGING, BRACING, SHEETING AND SHORING, ETC.

1.1 COORDINATE THESE SHEETS WITH THE ARCHITECTURAL, MECHANICAL, ELECTRICAL, PLUMBING, AND CIVIL SHEETS. ALL DIMENSIONS SHOWN ON THE SHEETS ARE MILLIMETERS UNLESS NOTED OTHERWISE.

1.2 THE CONTRACTOR SHALL VERIFY AND COORDINATE ALL FLOOR AND ROOF OPENING SIZES AND LOCATIONS, EQUIPMENT PAD SIZES AND LOCATIONS, ANCHOR BOLT LAYOUTS, ETC WITH EQUIPMENT SELECTED. THE CONTRACTOR SHALL MAKE ANY REQUIRED MODIFICATIONS AT NO ADDITIONAL COST.

1.3 THE CONTRACTOR SHALL REFER TO THE ARCHITECTURAL, MECHANICAL, ELECTRICAL AND PLUMBING SHEETS FOR SLEEVES, CURBS, INSERTS OR OPENINGS, ETC. NOT HEREIN INDICATED.

1.4 SLAB OPENINGS SMALLER THAN 250mm DIA TO BE CORE DRILLED IN FIELD UON. SEE MECHANICAL, ELECTRICAL AND PLUMBING SHEETS FOR LOCATIONS OF THESE OPENINGS.

1.5 WORK NOT INCLUDED ON THE SHEETS BUT IMPLIED TO BE SIMILAR TO THAT SHOWN AT CORRESPONDING PLACES ELSEWHERE ON THE SHEETS SHALL BE REPEATED.

1.6 IN CASE OF CONFLICT BETWEEN THE NOTES, DETAILS AND SPECIFICATIONS THE MOST RIGID REQUIREMENTS SHALL GOVERN.

1.7 SEE ARCHITECTURAL SHEETS FOR LOCATIONS OF MASONRY AND DRYWALL NON-LOAD BEARING PARTITIONS. PROVIDE COMPRESSIBLE FIRESAFING AT TOP OF WALL AS REQUIRED BY ARCHITECTURAL SHEETS.

1.8 COORDINATE FINISHED FLOOR DATUM ELEVATION 0.0m WITH THE CIVIL SHEETS.

2.0 FOUNDATION NOTES

2.1 THE GEOTECHNICAL ANALYSIS FOR THIS PROJECT IS THE RESPONSIBILITY OF THE CONTRACTOR AWARDED THE WORK. DESIGN VALUES USED IN THE STRUCTURAL ANALYSIS OF THE BUILDINGS HEREIN INDICATED HAVE BEEN ASSUMED AND SHALL BE CONFIRMED AND VERIFIED AS PART OF THE GEOTECHNICAL INVESTIGATION. VALUES WHICH DO NOT MEET THE REQUIREMENTS INDICATED ON SHEET S2 SHALL BE IMMEDIATELY BROUGHT TO THE ATTENTION OF THE CONTRACTING OFFICER FOR CONSIDERATION AND DETERMINATION ON THE NEXT APPROPRIATE COURSE OF ACTION.

2.2 SEE THE SPECIFICATION FOR ADDITIONAL REQUIREMENTS TO THOSE OUTLINED IN THE GEOTECHNICAL INVESTIGATION FOR EXCAVATION AND PREPARATION OF THE FOUNDATION AND THE SLAB ON GRADE SUBGRADE INCLUDING COMPACTION PROCEDURES.

2.3 EXCAVATIONS FOR FOOTINGS SHALL HAVE THE SIDES AND BOTTOMS TEMPORARILY LINED WITH 0.25mm POLYETHYLENE IF PLACEMENT OF CONCRETE DOES NOT OCCUR WITHIN 24 HRS OF THE EXCAVATION OF THE FOOTING.

2.4 FOUNDATION CONDITIONS NOTED DURING CONSTRUCTION WHICH DIFFER FROM THOSE DESCRIBED IN THE GEOTECHNICAL REPORT SHALL BE REPORTED TO THE GENERAL CONTRACTOR BEFORE FURTHER CONSTRUCTION IS ATTEMPTED. SEE PROJECT SPECIFICATIONS.

2.5 NO FOOTINGS OR SLABS SHALL BE POURED INTO OR AGAINST SUBGRADE CONTAINING FREE WATER, FROST, ICE OR LOOSE MATERIAL. FROST DEPTH ASSUMED TO BE 800MM

2.6 ALL SLAB-ON-GRADE, TRENCH BOTTOMS AND OTHER ON-GRADE INTERIOR HORIZONTAL SURFACES SHALL BE PLACED OVER A 0.25mm VAPOR RETARDER OVER A 100mm #57 STONE WATER BARRIER PLACED ON SUBGRADE PROPERLY PREPARED IN ACCORDANCE WITH THE CONTRACT SPECIFICATIONS. (UON)

2.7 SEE PLUMBING, ELECTRICAL & CIVIL SHEETS FOR REQUIRED UNDERSLAB UTILITIES.

2.8 SEE ARCHITECTURAL SHEETS FOR ALL WATERPROOFING DETAILS AND MATERIALS.

2.9 IF UNDERMINING OF FOOTINGS OCCURS, FILL VOIDS WITH 15MPa CONCRETE. DO NOT ATTEMPT TO REPLACE AND RECOMPACT SOIL.

3.0 CONCRETE

3.1 CONCRETE SHALL HAVE THE UNIT WEIGHT AND THE MINIMUM COMPRESSIVE STRENGTHS (f'c) AT 28 DAYS AS SHOWN IN THE CONCRETE MATERIALS SCHEDULE ON THIS SHEET. SEE SPECIFICATIONS FOR ADDITIONAL INFORMATION. ENTRAIN AIR TO PRODUCE TOTAL AIR CONTENT ACCORDING TO THE SPECIFICATIONS FOR CONCRETE EXPOSED TO FREEZING TEMPERATURES (EXTERIOR FOOTINGS, SLAB TURNDOWNS, EXTERIOR SLABS AND SLABS-ON-GRADE, EXTERIOR RETAINING WALLS, AND EXTERIOR GRADE BEAMS.)

3.2 GROUT FOR BASE PLATES SHALL BE NON-SHRINKABLE GROUT AND SHALL HAVE A MINIMUM SPECIFIED COMPRESSIVE STRENGTH AT 28 DAYS OF 35MPa, UNLESS NOTED OTHERWISE.

3.3 NO CALCIUM CHLORIDE SHALL BE USED IN ANY CONCRETE.

3.4 MIXING, TRANSPORTING AND PLACING OF CONCRETE SHALL CONFORM TO ACI 301M-05.

3.5 ALL CONCRETE WORK SHALL CONFORM TO THE REQUIREMENTS OF THE AMERICAN CONCRETE INSTITUTE (ACI) 318M MANUAL (metric), "BUILDING CODE REQUIREMENTS FOR REINFORCED CONCRETE", AND REQUIREMENTS OUTLINED IN THE CONTRACT SPECIFICATIONS. WHEN THERE IS A CONFLICT BETWEEN ACI AND THE SPECIFICATIONS, THE MORE STRINGENT SHALL GOVERN.

3.6 CHAMFER ALL EXPOSED EXTERNAL CORNERS OF CONCRETE WITH 20mm x45 DEGREE CHAMFER UON.

3.7 CONCRETE REINFORCEMENT BARS SHALL CONFORM TO ASTM A615M, GRADE 420, REINFORCING BARS SHALL NOT BE TACK WELDED, WELDED, HEATED OR CUT, UNLESS INDICATED ON THE CONTRACT DOCUMENTS. ALL LAP SPLICES SHALL BE CLASS "B" UON.

3.8 HORIZONTAL FOOTING AND HORIZONTAL WALL REINFORCEMENT SHALL BE CONTINUOUS AND SHALL HAVE 90 DEGREE BENDS AND EXTENSIONS, OR CORNER BARS OF EQUIVALENT SIZE LAPPED WITH A CLASS B TENSION SPLICE AT CORNERS AND INTERSECTIONS. TOP BAR CRITERIA SHALL APPLY IF 300mm OR MORE OF FRESH CONCRETE IS PLACED BELOW BAR.

3.9 SLABS-ON-GRADE SHALL HAVE CONSTRUCTION JOINTS OR CRACK CONTROL JOINTS AS SHOWN ON THE SHEETS. CONSTRUCTION JOINTS CAN BE USED AT CONTROL JOINT LOCATIONS AT CONTRACTORS OPTION. SEE SLAB PLANS & JOINT DETAILS FOR ADDITIONAL INFORMATION. FOR AREAS NOT SHOWN ON THE SHEETS, THE MAXIMUM SPACING OF CONSTRUCTION/ CRACK CONTROL JOINTS SHALL BE 4800 mm.

3.10 SEE SPECIFICATIONS FOR ALL WATERPROOFING/DAMPPROOFING REQUIREMENT.

3.11 ALL CONCRETE REINFORCEMENT SHALL BE DETAILED, FABRICATED, LABELED, SUPPORTED, AND SPACED IN FORMS AND SECURED IN PLACE IN ACCORDANCE WITH THE PROCEDURES AND REQUIREMENTS OUTLINED IN THE LATEST EDITION OF THE "BUILDING CODE REQUIREMENTS FOR REINFORCED CONCRETE", ACI 318M, AND THE "MANUAL OF STANDARD PRACTICE FOR DETAILING REINFORCED CONCRETE STRUCTURES", ACI 315M, LATEST EDITION.

3.12 SHOP DRAWINGS SHOWING REINFORCING DETAILS, INCLUDING STEEL SIZES, SPACING AND PLACEMENT, SHALL BE SUBMITTED FOR REVIEW PRIOR TO FABRICATION.

3.13 ALL DOWELS SHALL MATCH SIZE AND NUMBER OF MAIN REINFORCING, UNLESS NOTED OTHERWISE ON THE SHEETS.

3.14 ADDITIONAL BARS SHALL BE PROVIDED AROUND ALL FLOOR AND WALL OPENINGS AS SHOWN ON THE SHEETS.

3.15 SEE ARCHITECTURAL SHEETS FOR TYPE AND LOCATION OF ALL FLOOR FINISHES.

3.16 THE CONTRACTOR SHALL COORDINATE ADDITIONAL WALL/SLAB OPENINGS NOT SHOWN ON STRUCTURAL SHEETS. SEE MECHANICAL, ELECTRICAL, PLUMBING AND CIVIL SHEETS.

3.17 THE SUB-CONTRACTOR SHALL VERIFY ALL OPENINGS, PAD SIZES, AND ANCHOR BOLTS WITH EQUIPMENT SELECTED.

3.18 FOR ALL WALLS & PIERS, PROVIDE DOWELS INTO FOOTING AT EACH VERT REINF BAR, UON DOWEL SIZE SHALL BE SAME AS VERT REINF.

3.19 ALL REINFORCING INDICATED TO BE WELDED SHALL BE IN ACCORDANCE WITH ASTM A706M. "LOW ALLOY STEEL DEFORMED BARS FOR CONCRETE REINFORCEMENT". ANY INSTALLATIONS USING MANUFACTURER'S EQUIPMENT SHALL BE PER MANUFACTURER'S RECOMMENDATIONS.

3.20 PROVIDE CONCRETE POUR STOPS OR FORMED AS REQUIRED FOR INSTALLATION OF ALL CONCRETE WORK.

3.21 PROVIDE ADDITIONAL (2)-#13 x 600mm REINFORCING BARS IN SLAB-ON GRADE AT ALL RE-ENTRANT CORNERS. PLACE BARS AT MID-DEPTH OF SLAB WITH A CLEARANCE OF 50mm FROM CORNER UON.

4.0 CONCRETE MASONRY

4.1 MASONRY CONSTRUCTION AND MATERIALS SHALL CONFORM TO ALL REQUIREMENTS OF THESE CONTRACT DOCUMENTS AND THE PROJECT SPECIFICATIONS.

4.2 THE SPECIFIED ULTIMATE COMPRESSIVE STRENGTH OF CONCRETE MASONRY (f'm) ON THE NET AREA IS A MINIMUM OF 10.4 MPa.

4.3 PROVIDE TWO #16 BARS CONTINUOUS IN ALL CMU AND CAST-IN-PLACE BOND BEAMS UON ON THE SHEETS. BOND BEAM REINFORCING SHALL BE CONTINUOUS AND SPACED AT A MAXIMUM OF 1200mm OC VERTICALLY. PROVIDE BOND BEAM STARTER COURSE AT BOTTOM OF FIRST COURSE ON ALL MASONRY WALLS AND PARTITIONS. ALL BOND BEAMS SHALL BE A MINIMUM OF 200mm IN DEPTH WITH REINFORCING BEING CONTINUOUS AND HAVING STANDARD ACI HOOKS AT EACH END. PROVIDE STANDARD BAR SPLICES AS SPECIFIED.

4.4 FOR WALL REINFORCING SEE "MIN CMU WALL REINFORCING" DETAILS ON SHEET S6. PROVIDE STANDARD BAR SPLICES AS SPECIFIED. ALL VERTICAL REINFORCEMENT EXTENDS FULL HEIGHT OF WALL.

4.5 CMU CELLS THAT REQUIRE VERTICAL REINFORCING BARS AS INDICATED ON THE CONTRACT DRAWINGS AND/OR SPECS SHALL HAVE REINF BARS PLACED IN CENTERS OF CMU CELLS AND CONTINUOUSLY GROUTED UON.

4.6 PROVIDE LADDER TYPE JOINT REINFORCEMENT AT (200mm EXTERIOR & 400mm INTERIOR) ON CENTER MAXIMUM UON MINIMUM ROD SIZE USED SHALL BE 9 GA. DEFORMED WIRE AND CONFORM TO ASTM A82M, UON.

4.7 PROVIDE CONTROL JOINTS AS INDICATED ON THE ARCHITECTURAL SHEETS.

4.8 GROUT FOR MASONRY SHALL BE NORMAL WEIGHT AND HAVE A MINIMUM COMPRESSIVE STRENGTH OF 25 MPa AT 28 DAYS. GROUT SHALL CONFORM TO ASTM C476M. GROUT LIFTS SHALL NOT EXCEED 1400mm.

4.9 USE MORTAR TYPE S CONFORMING TO ASTM C270M, SEE SPECIFICATIONS.

4.10 CONCRETE MASONRY UNITS SHALL BE NORMAL WEIGHT AND CONFORM TO ASTM C90M.

4.11 ALL CMU CELLS, OPEN CAVITIES, AND AIR SPACES SHALL BE GROUTED TO STOP FRAGMENTS FROM MORTAR BLAST

4.12 BOND BEAM REINFORCING SHALL BE DISCONTINUOUS AT CONTROL JOINTS (UON). MAXIMUM CONTROL JOINT SPACING SHALL BE AS INDICATED ON THE ARCHITECTURAL SHEETS.

4.13 CONTRACTOR SHALL COORDINATE LOCATION OF ALL OPENINGS SEE ARCH, MECH, ELEC, AND PLUMBING SHEETS. FOR SIZE AND LOCATION OF OPENINGS.

4.14 MASONRY WALLS SHALL NOT BE BACK FILLED PRIOR TO THE MORTAR AND GROUT ATTAINING THEIR RESPECTIVE MAXIMUM DESIGN STRENGTHS PER SPECIFICATIONS.

MASONRY REINFORCING MINIMUM LAP SPLICES

BAR SIZE	BASIC LAP SPLICE Ld FOR CMU REINFORCING
#10	450
#13	600
#16	750

MINIMUM LAP SPLICES OF REINFORCING BARS IN TENSION (PER ACI 318M-05)

f'c = 28 MPa CONCRETE

BAR SIZE \ CENTER TO CENTER BAR SPACING	(---TOP BARS--) LESS THAN 4db	(---TOP BARS--) 4db OR MORE	(--OTHER BARS--) LESS THAN 4db	(--OTHER BARS--) 4db OR MORE	(--OTHER BARS--) 4db
#10	460	460	410	410	40
#13	660	610	510	480	50
#16	1020	760	790	580	60

NOTES:

1. LAP SPLICES ABOVE ARE IN MILLIMETERS UON.
2. YIELD STRENGTH OF REINFORCEMENT, fy, IS 420MPa (LAP SPLICE LENGTH IS IN MILLIMETERS).
3. CONCRETE IS NORMAL WEIGHT (2400Kg/m^3).
4. TOP BAR INDICATES HORIZONTAL REINFORCEMENT WHICH IS PLACED ABOVE 300mm OR MORE OF FRESH CONCRETE.
5. SEE COLUMN SCHEDULE FOR COLUMN AND SHEAR WALL VERTICAL LAP SPLICE.
6. STRAIGHT DEVELOPMENT LENGTH OF AN UNLAPPED BAR IS EQUAL TO VALUE FROM TABLE DIVIDED BY 1.3.
7. CATEGORY FOR BARS SPACED LESS THAN 4d, OR ON CENTER CORRESPONDS TO CATEGORY 1 IN THE CRSI HANDBOOK WHEREAS FOR BARS SPACED 4d, OR MORE ON CENTER CORRESPOND TO CRSI CATEGORY 5.

CONCRETE MATERIALS SCHEDULE

STRUCTURAL ELEMENT	f'c CONCRETE COMPRESSIVE STRENGTH @ 28 DAYS (MPa)
SLAB-ON-GRADE/TURN-DOWN SLABS	28
ROOF AND FLOOR SLABS	28
ALL FOOTINGS (UON)	28
MISC. CURBS, WALLS AND PADS UON	28
CAST-IN-PLACE LINTEL	28

NOTES:
1. ALL CONCRETE SHALL BE NORMAL WEIGHT CONCRETE. (2400 Kg/m^3 UON)
2. ALL CONCRETE SHALL HAVE A WATER-CEMENT RATIO OF 0.45.

STANDARD HOOKS IN TENSION PER (ACI 318M-05)

HOOK DEVELOPMENT LENGTH Ldh (mm)

BAR SIZE	f'c 28 MPa
#10	180
#13	250
#16	300
#19	380
#22	430
#25	480
#29	560
#32	610
#36	690

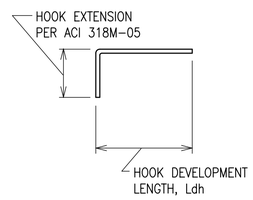

NOTES:

1. CONCRETE IS NORMAL WEIGHT CONCRETE.
2. BAR YIELD STRENGTH, fy = 420 MPa
3. SIDE COVER REQUIREMENTS OF ACI SECT. 12.5.3.2 ARE ASSUMED TO NOT BE MET.
4. TIE OR STIRRUP REQUIREMENTS OF ACI SECT. 12.5.3.2 ARE ASSUMED TO NOT BE MET.
5. REDUCTION FOR EXCESS REINFORCEMENT IS NOT TAKEN.
6. HOOK DEVELOPMENT LENGTH IS VALID FOR 180° HOOKS ALSO.

US Army Corps of Engineers
Afghanistan Engineer District

SYMBOL	DESCRIPTION	DATE	APR

DESIGNED BY: GDH
DWN BY: MDB
CHK BY: CWW
DATE: 09-30-09
SUBMITTED BY: BAKER
FILE NO.: ANPSDS-001XXX

Michael Baker Jr., Inc
A unit of Michael Baker Corporation
Airside Business Park
100 Airside Drive
Moon Township, PA 15108
www.mbakercorp.com

AFGHAN NATIONAL POLICE
STANDARD DESIGN
SECURE STORAGE

GENERAL NOTES

SHEET REFERENCE NUMBER:
S1

100% SUBMISSION

STRUCTURAL DESIGN CRITERIA

ALL DESIGNS SHALL CONFORM TO THE PROVISIONS OF THE IBC 2006 AS APPLICABLE

1.0 DESIGN LOADS

1.1 DEAD LOADS

1.1.1 ROOF DEAD LOADS

	MAXIMUM GRAVITY LOAD	MINIMUM GRAVITY LOAD
MISC	0.05 KPa	0.00 KPa
	0.05 KPa	0.00 KPa

1.1.2 ROOF DEAD LOADS – CONCRETE FRAMING

	MAXIMUM GRAVITY LOAD
CONC FLAT SLAB	6.00 KPa
MISC	0.05 KPa
	6.05 KPa

1.2 LIVE LOADS (PER IBC 2006)

1.2.1 ROOF LIVE LOADS: ALL BUILDINGS

GREATER OF 1.0 KPa MINIMUM OR SNOW LOAD

1.2.2 SLAB-ON-GRADE LIVE LOADS

LIVE LOAD 12.0 KPa

1.3 SNOW LOADS (PER IBC 2006)

1.3.1 DESIGN PARAMETERS

GROUND SNOW LOAD (per UFC 3-310-01)	PER LOCAL CONDITION
SNOW IMPORTANCE FACTOR	1.0 KPa
SNOW EXPOSURE FACTOR	1.0 KPa

1.4 SEISMIC LOADS (PER IBC 2006 & UFC 3-310-04)

1.4.1 SEISMIC PARAMETERS – LOAD BEARING MASONRY

SEISMIC OCCUPANCY CATEGORY	II
SEISMIC IMPORTANCE FACTOR (I)	1.0
SEISMIC SITE CLASS	D
Ss	1.280
S1	0.510
Sds	0.853
Sd1	0.510
SEISMIC DESIGN CATEGORY	D
SEISMIC RESISTING SYSTEM	BEARING WALL SYSTEM SPECIAL REINF SHEAR WALLS
RESPONSE MODIFICATION FACTOR (R)	5.0
RESPONSE COEFFICIENT (Cs)	0.170
SEISMIC ANALYTICAL PROCEDURE	EQUIV LATERAL FORCE
SEISMIC BASE SHEAR	284.7kN

1.5 WIND LOADS (PER IBC 2006)

1.5.1 DESIGN PARAMETERS

BASIC WIND SPEED	137 Km/h
WIND IMPORTANCE FACTOR	1.0
WIND EXPOSURE CATEGORY	D
DIRECTIONALITY COEFFICIENT (Kd)	0.85
TOPOGRAPHIC FACTOR (Kzt)	1.0

1.5.2 DESIGN WIND PRESSURE – MAIN WINDFORCE RESISTING SYSTEM

LOCATION	CORNER ZONE WIDTH "a"	MEAN ROOF HEIGHT "h"	WINDWARD WALL (@ MEAN ROOF HEIGHT)	LEEWARD WALL (@ MEAN ROOF HEIGHT)	ROOF
FIELD ZONE	N/A	3790mm	508 N/m^2	286 N/m^2	867 N/m^2
CORNER ZONE	900mm	3790mm	776 N/m^2	421 N/m^2	–1340 N/m^2

a = 10% OF LEAST HORIZONTAL DIMENSION OR 0.4h, WHICHEVER IS SMALLER, BUT NOT LESS THAN EITHER 4% OF LEAST HORIZONTAL DIMENSION OR 0.9M.
h = MEAN ROOF HIEGHT, IN METERS, EXCEPT THAT EAVE HIEGHT SHALL BE USED FOR ANGLE GREATER THAN 10°.

1.5.3 DESIGN WIND PRESSURE – WALL COMPONENTS AND CLADDING

EXTERIOR WALL SYSTEMS & THEIR ATTACHMENTS TO THE PRIMARY STRUCTURE SHALL BE DESIGNED FOR THE PRESSURES SHOWN IN THE DIAGRAM BELOW:

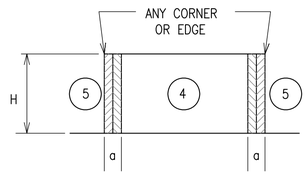

LOCATION	WINDWARD PRESSURE N/m^2 (inward)		LEEWARD PRESSURE N/m^2 (outward)		a
	4	5	4	5	
MAIN BUILDING					(mm)
AREA = 1 m^2	909	909	–986	–1216	900
AREA = 2 m^2	867	867	–948	–1134.8	900
AREA = 5 m^2	804	804	–885	–1010	900
AREA = 10 m^2	804	804	–885	–1010	900

NOTES:
1. DESIGN WIND PRESSURES ABOVE REPRESENT THE NET PRESSURE (SUM OF INTERNAL AND EXTERNAL PRESSURE) APPLIED NORMAL TO ALL SURFACES.
2. LINEAR INTERPOLATION BETWEEN VALUES OF TRIBUTARY AREA IS PERMISSIBLE.
3. PLUS AND MINUS SIGNS SIGNIFY PRESSURE TOWARD AND AWAY FROM THE EXTERIOR SURFACE, RESPECTIVELY.

1.5 WIND LOADS (CON'T)

1.5.4 DESIGN WIND PRESSURE – ROOF COMPONENTS AND CLADDING

ROOF COMPONENTS & THEIR ATTACHMENTS SHALL BE DESIGNED FOR THE PRESSURES SHOWN IN THE ADJACENT DIAGRAM & TABLE BELOW:

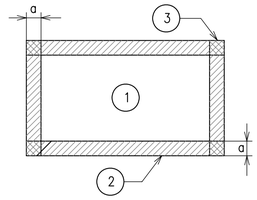

ROOF MEAN HEIGHT

LOCATION	GROSS UPLIFT PRESSURE N/m^2 (upward)			a
	1	2	3	
MAIN BUILDING				(mm)
AREA = 1 m^2	–838	–1460	–1460	900
AREA = 2 m^2	–838	–1460	–1460	900
AREA = 5 m^2	–838	–1460	–1460	900
AREA = 10 m^2	–838	–1460	–1460	900

NOTES:
1. DESIGN WIND PRESSURES ABOVE REPRESENT THE NET PRESSURE (SUM OF INTERNAL AND EXTERNAL PRESSURE) APPLIED NORMAL TO ALL SURFACES.
2. LINEAR INTERPOLATION BETWEEN VALUES OF TRIBUTARY AREA IS PERMISSIBLE.
3. PLUS AND MINUS SIGNS SIGNIFY PRESSURE TOWARD AND AWAY FROM THE EXTERIOR SURFACE, RESPECTIVELY.

2.0 FOUNDATION DESIGN CRITERIA (TO BE CONFIRMED BY THE CONTRACTOR)

THE GEOTECHNICAL ANALYSIS FOR THIS PROJECT IS THE RESPONSIBILITY OF THE CONTRACTOR AWARDED THE WORK. DESIGN VALUES USED IN THE STRUCTURAL ANALYSIS OF THE BUILDINGS HEREIN INDICATED HAVE BEEN ASSUMED AND SHALL BE CONFIRMED AND VERIFIED AS PART OF THE GEOTECHNICAL INVESTIGATION. VALUES WHICH DO NOT MEET THE REQUIREMENTS INDICATED BELOW SHALL BE IMMEDIATELY BROUGHT TO THE ATTENTION OF THE CONTRACTING OFFICER FOR CONSIDERATION AND DETERMINATION ON THE NEXT APPROPRIATE COURSE OF ACTION.

2.1.1 SOIL DESIGN PARAMETERS

NET ALLOWABLE SOIL BEARING CAPACITY	96.0 KPa
UNIT WEIGHT OF SOIL (moist)	1800 Kg/m^3
COEFF ACTIVE EARTH PRESSURE (Kpa)	0.30
COEFF PASSIVE EARTH PRESSURE (Kpp)	3.33
COEFF AT-REST EARTH PRESSURE (Kpr)	.55
COEFF OF SOIL FRICTION	.35
SUBGRADE MODULUS	4120 g/m^3
MINIMUM BEARING DEPTH BELOW GRADE	800mm
SEISMIC SITE CLASS (based on in-situ soil)	D

CONCRETE COVER SCHEDULE

MINIMUM CONCRETE COVER PROTECTION FOR REINFORCEMENT BARS SHALL BE AS FOLLOWS: (SEE ACI 318M-05, SECTION 7.7 FOR CONDITIONS NOT NOTED). DIMENSIONS FOR BAR PLACEMENT GIVEN IN SECTIONS AND DETAILS SHALL SUPERSEDE MINIMUM COVER REQUIREMENTS GIVEN HERE. DIMENSIONS ARE IN mm.

FOOTINGS (EARTH FORMED)		70
COLUMNS / PIERS (TO TIES)		40
GRADE BEAMS OR SLAB TURNED DOWN EDGES:		
TOP		40
BOTTOM (EARTH FORMED)		70
SIDES (EARTH FORMED)		70
SIDES (BOARD FORMED)	#16 BAR & SMALLER	40
	#19 THRU #36 BAR	50
ELEVATED BEAMS & SLABS:		
BEAM TIES & STIRRUPS (NOT EXPOSED TO WEATHER)		40
BEAM TIES & STIRRUPS (EXPOSED TO WEATHER)		50
FLOOR SLABS (NOT EXPOSED TO WEATHER)		20
FLOOR SLABS (EXPOSED TO WEATHER)		
#19 & LARGER		50
#13 & SMALLER		40
ROOF SLAB BARS		25
SLABS-ON-GRADE (NO EXPOSURE TO WEATHER) FROM TOP		20
SLABS-ON-GRADE (EXPOSURE TO WEATHER) FROM TOP		40
UTILITY TUNNEL WALLS, RETAINING WALLS AND SHEAR WALLS, (NO SURFACES SHALL BE EARTH FORMED) EARTH SIDE AND FRONT SIDE (EXPOSED TO WEATHER):		
#16 BAR AND SMALLER		40
#19 THRU #36 BAR		50

PROVIDE STANDARD BAR CHAIRS AND SPACERS AS REQUIRED TO MAINTAIN CONCRETE PROTECTION SPECIFIED.

CMU LINTEL SCHEDULE

OPENING TYPE OR SIZE, BEAM LOCATION OR TYPE	MAX SPAN (mm)	BEAM DEPTH (mm)	MAIN REINFORCING			SHEAR REINF STIRRUPS
			TOP	BOTTOM	OTHER	
INT WALL OPENING, NON-BEARING	1800	400		(2)-#13		----
INT WALL OPENING, NON-BEARING	900	200		(2)-#13		----

1. STRUCTURAL DRAWINGS DO NOT INDICATE ALL OPENINGS IN MASONRY WALLS. VERIFY NUMBER, SIZE AND LOCATION OF ALL OPENINGS IN MASONRY WALLS FROM ARCHITECTURAL SHEETS AND APPROVED PLUMBING, MECHANICAL, AND ELECTRICAL SHOP DRAWINGS.
2. PROVIDE 200mm BEARING EA END FOR 200mm DEEP CMU LINTEL PROVIDE 400mm BEARING EA END FOR 400mm DEEP CMU LINTEL.
3. FOR HEAD DETAILS REFER TO ARCHITECTURAL SHEETS.
4. REINFORCING SHALL BE ASTM A615M, GRADE 420. CONCRETE FOR CAST-IN-PLACE BEAMS SHALL HAVE A MINIMUM COMPRESSIVE STRENGTH OF 28 MPa AT 28 DAYS.
5. CONTRACTOR SHALL SUBMIT FOR APPROVAL SHOP DRAWINGS AND SCHEDULES SHOWING SIZE, DETAILS, LOCATIONS, ETC FOR ALL CAST-IN-PLACE BEAMS IN CMU WALLS.

US Army Corps of Engineers
Afghanistan Engineer District

SYMBOL	DESCRIPTION	DATE	APR

DESIGNED BY: GDH
DWN BY: MDB
CHK BY: CWW
DATE: 09-30-09
SUBMITTED BY: BAKER
FILE NO.: ANPSDS-002XXX

Michael Baker Jr, Inc
A unit of Michael Baker Corporation
Airside Business Park
100 Airside Drive
Moon Township, PA 15108
www.mbakercorp.com

AFGHAN NATIONAL POLICE
STANDARD DESIGN
SECURE STORAGE

DESIGN CRITERIA

SHEET REFERENCE NUMBER:
S2

100% SUBMISSION

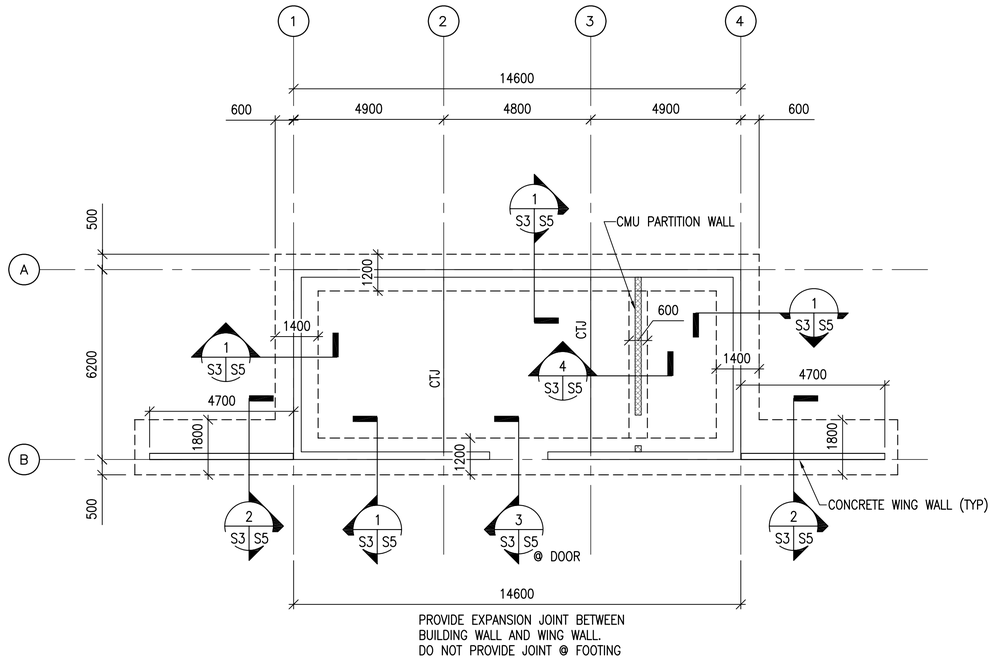

FOUNDATION PLAN

SCALE: 1:100

N

NOTES:

1. FINISH FIRST FLOOR ELEVATION SHALL BE (DATUM 0.0) ALL PLUS OR MINUS DIMENSIONS INDICATED ON PLAN OR REFERRED TO IN NOTES RELATE TO FINISH FIRST FLOOR ELEVATION.
2. TOP OF EXTERIOR FOOTINGS SHALL BE −500 UNLESS OTHERWISE INDICATED.
3. UNLESS OTHERWISE INDICATED, FLOORS SHALL BE 150 THICK CONCRETE SLAB−ON−GRADE W/ 13 DIA REBAR @ 250 OC EW (38 CLR TOP) OVER 100 COMPACTED POROUS FILL (#57 STONE)
4. REFER TO SHEETS S1 & S2 FOR STRUCTURAL NOTES, BASIS OF DESIGN, SYMBOLS AND ABBREVIATIONS.
5. CTJ AND CJ INDICATES SLAB CONTROL OR CONSTRUCTION JOINTS RESPECTIVELY REFER TO SHEET S6 FOR SECTIONS & DETAILS.
6. REFER TO ARCHITECTURAL SHEETS FOR MASONRY PARTITION TYPES AND SHEET S6 FOR REINFORCEMENT.
7. SEE MECHANICAL AND ELECTRICAL SHEETS FOR CONCRETE PAD LOCATIONS, SIZES, AND THICKNESS NOT SHOWN. SEE SHEET S6 FOR DETAILS.
8. CONCRETE ROOF STRUCTURE SHALL BE POURED−IN−PLACE IN ONE CONTINUOUS OPERATION AND SHORED AS REQUIRED UNTIL THE CONCRETE REACHES 75% OF ITS DESIGN STRENGTH AS A MINIMUM.
9. CONCRETE WALLS OF THE BUILDING SHALL NOT HAVE BACKFILL PLACED AGAINST THEM UNTIL THE SLAB−ON−GRADE AND CONCRETE ROOF STRUCTURES ARE IN PLACE AND ALL CONCRETE HAS ACHIEVED 75% OF ITS DESIGN STRENGTH AS A MINIMUM.

UNLESS OTHERWISE NOTED, LINEAR DIMENSIONS SHOWN ARE IN MILLIMETERS (MM)

0 2000 4000 8000

SCALE: 1: 100

US Army Corps of Engineers

Afghanistan Engineer District

SYMBOL	DESCRIPTION	DATE	APR

DESIGNED BY: GDH	DATE: 09−30−09
DWN BY: MDB	SUBMITTED BY: BAKER
CHK BY: CWW	FILE NO.: ANPSDS−103XXX

Michael Baker Jr., Inc
A unit of Michael Baker Corporation
Airside Business Park
1500 Airside Drive
Moon Township, PA 15108
www.mbakercorp.com

AFGHAN NATIONAL POLICE
STANDARD DESIGN
SECURE STORAGE

FOUNDATION PLAN

SHEET REFERENCE NUMBER:

S3

100% SUBMISSION

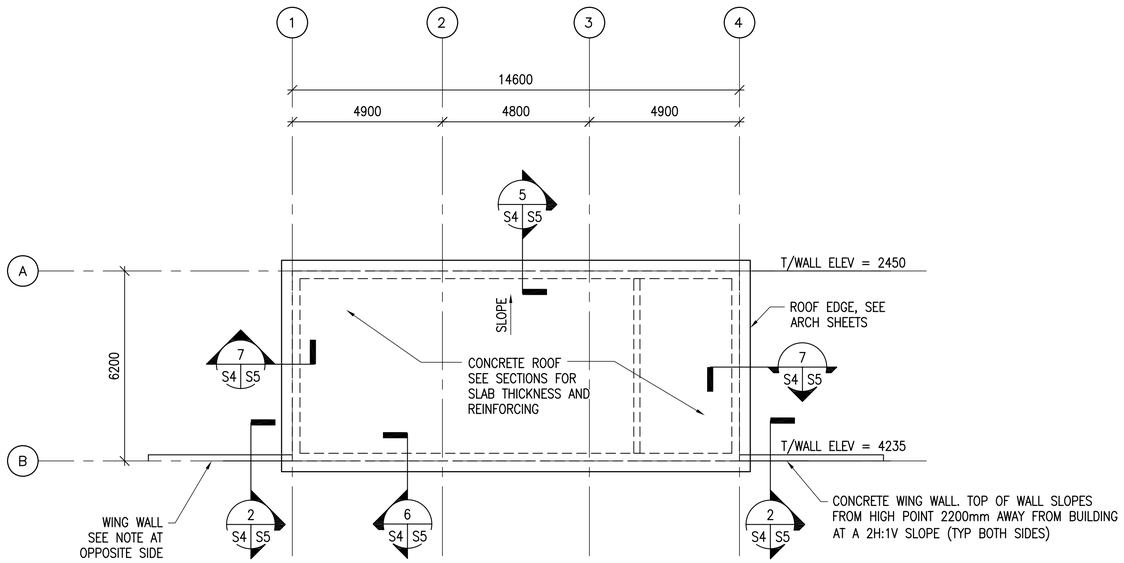

1 S4 S4

ROOF FRAMING PLAN

SCALE: 1:100

N

NOTES :

1. REFER TO SHEET S3 FOR PLAN NOTES.

UNLESS OTHERWISE NOTED, LINEAR DIMENSIONS SHOWN ARE IN MILLIMETERS (MM)

0 2000 4000 8000

SCALE: 1: 100

US Army Corps of Engineers

Afghanistan Engineer District

SYMBOL	DESCRIPTION	DATE	APR

DESIGNED BY: GDH
DATE: 09-30-09
DWN BY: MDB
SUBMITTED BY: BAKER
CHK BY: CWW
FILE NO.: ANPSDS-104XXX

Michael Baker Jr., Inc.
A unit of Michael Baker Corporation
Airside Business Park
100 Airside Drive
Moon Township, PA 15108
www.mbakercorp.com

AFGHAN NATIONAL POLICE
STANDARD DESIGN
SECURE STORAGE

ROOF FRAMING PLAN

SHEET REFERENCE NUMBER:

S4

100% SUBMISSION

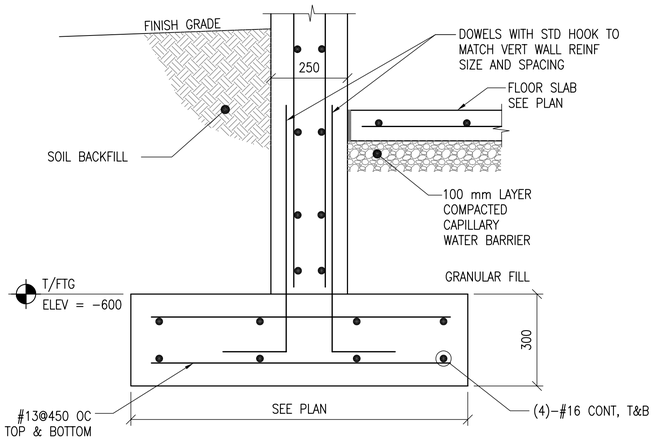

1 S3 S5 SECTION
SCALE: 1:10

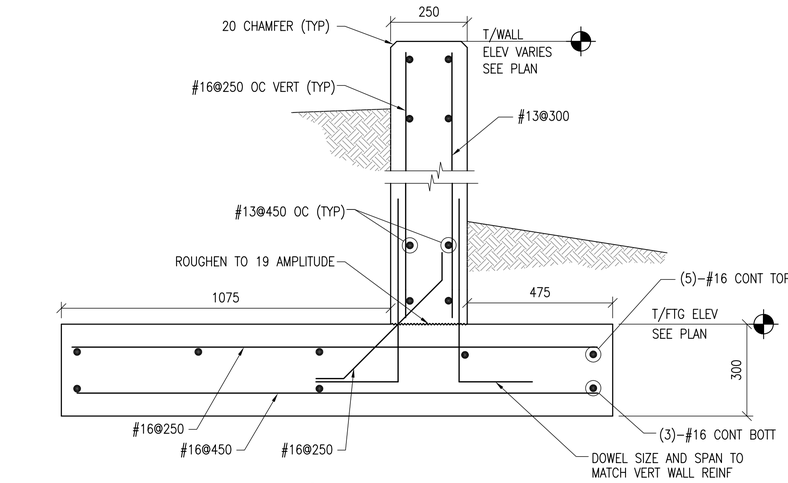

2 S3,S4 S5 SECTION
SCALE: 1:10

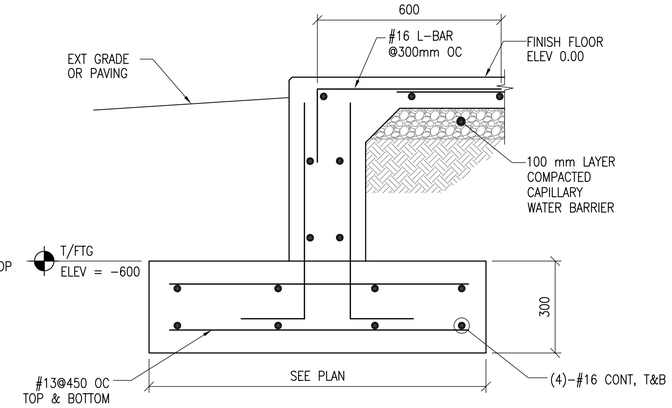

3 S3 S5 SECTION
SCALE: 1:10

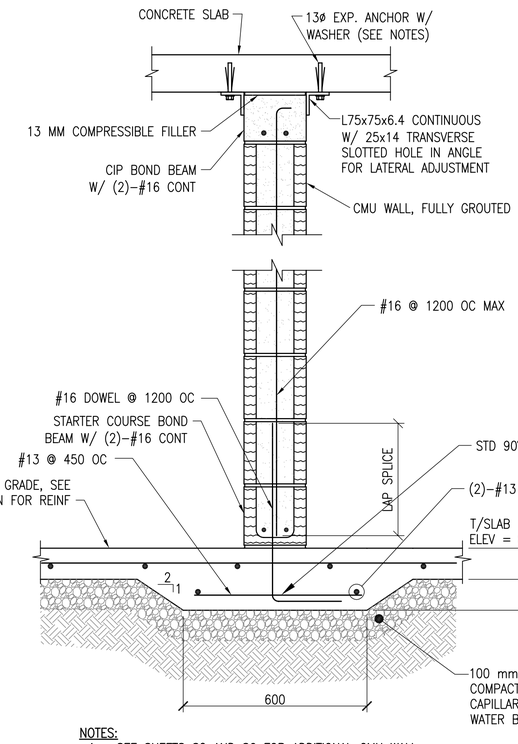

NOTES:
1. SEE SHEETS S2 AND S6 FOR ADDITIONAL CMU WALL REINFORCING REQUIREMENTS.
2. EMBED EXPANSION ANCHOR 82 MINIMUM INTO SOLID CONCRETE.
3. INSTALL 13 MM ISOLATION JOINT VERTICALLY AT WALL ENDS THAT ARE ADJACENT TO CONCRETE WALLS.
4. USE STEEL WASHER BETWEEN ANCHOR HEAD AND ANGLE. NOMINAL WASHER INSIDE AND OUTSIDE DIAMETER TO BE 14 & 35 RESPECTIVELY.

4 S3 S5 SECTION
SCALE: 1:10

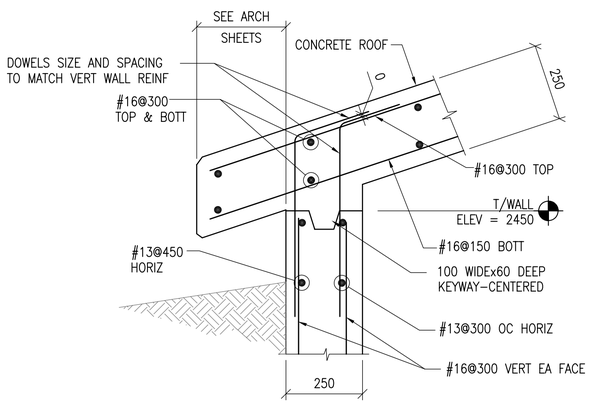

5 S4 S5 SECTION
SCALE: 1:10

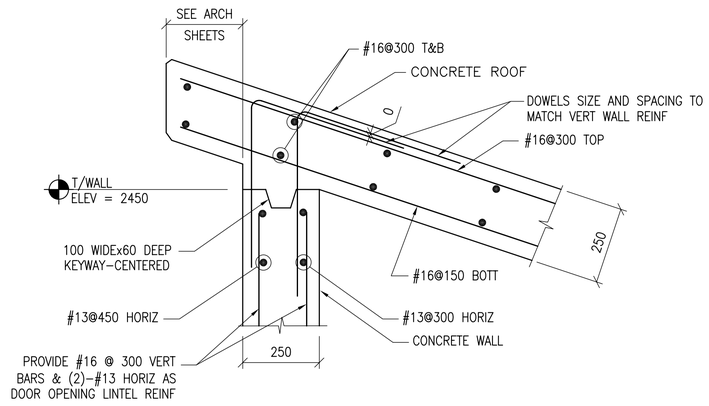

6 S4 S5 SECTION
SCALE: 1:10

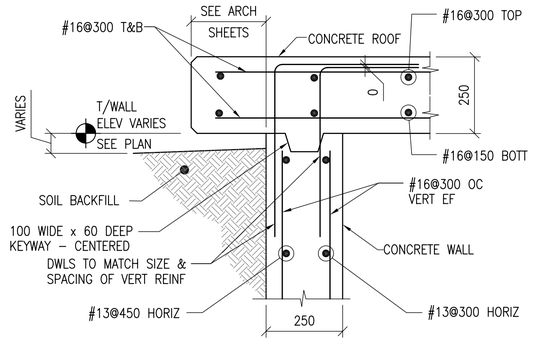

7 S4 S5 SECTION
SCALE: 1:10

UNLESS OTHERWISE NOTED, LINEAR DIMENSIONS SHOWN ARE IN MILLIMETERS (MM)

0 200 400 800
SCALE: 1: 10

US Army Corps of Engineers
Afghanistan Engineer District

SYMBOL	DESCRIPTION	DATE	APR

DESIGNED BY: GDH | DATE: 09-30-09
DWN BY: MDB | SUBMITTED BY: BAKER
CHK BY: CWW | FILE NO.: ANPSDS-305XXX

Michael Baker Jr., Inc
A unit of Michael Baker Corporation
Airside Business Park
100 Airside Drive
Moon Township, PA 15108
www.mbakercorp.com

AFGHAN NATIONAL POLICE
STANDARD DESIGN
SECURE STORAGE

SECTIONS
GENERAL NOTES

SHEET REFERENCE NUMBER:
S5

100% SUBMISSION

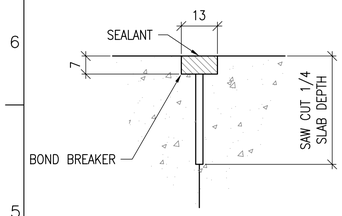

CONTROL JOINT DETAIL

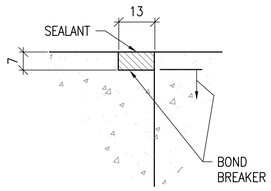

CONSTRUCTION JOINT DETAIL

1/S6 TYPICAL CONCRETE SLAB JOINT FINISH DETAIL

SCALE: NTS

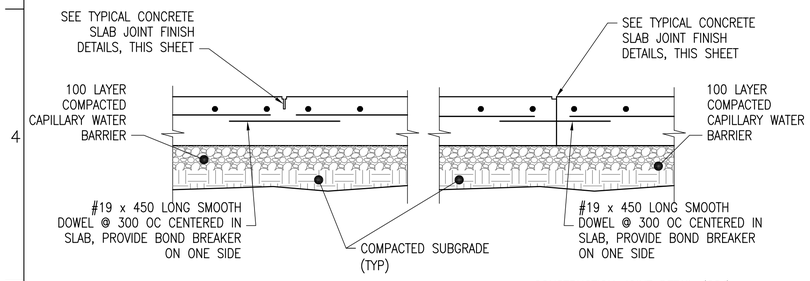

CONTROL JOINT DETAIL (CTJ)

CONSTRUCTION JOINT DETAIL (CSJ)

2/S6 TYPICAL SLAB ON GRADE JOINT DETAILS

SCALE: NTS

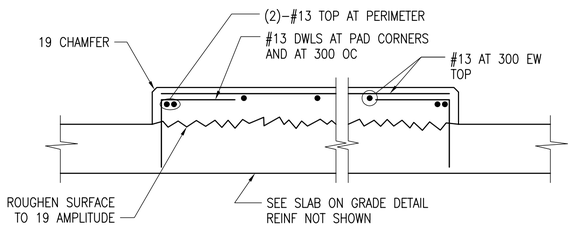

3/S6 INTERIOR EQUIPMENT PAD DETAIL

SCALE: NTS

DETAIL NOTE:

1. COORDINATE EQUIPMENT PAD SIZE AND LOCATIONS W/ ELECTRICAL/MECHANICAL SHEETS AND EQUIPMENT MANUFACTURER.

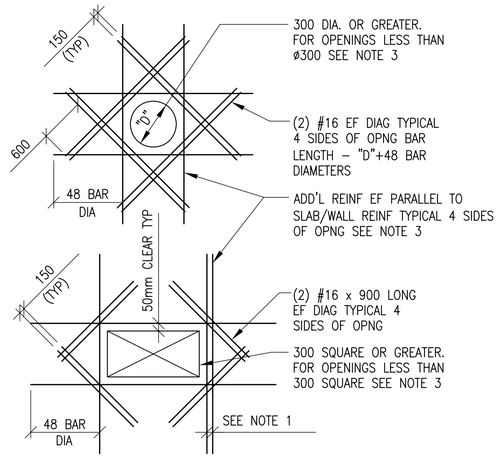

SLAB OPENINGS

4/S6 ADD'L REINFORCEMENT DETAILS

SCALE: NTS

DETAIL NOTES:

1. WHERE MORE THAN ONE ADDITIONAL BAR IS REQUIRED PARALLEL TO THE EXISTING SLAB/WALL REINFORCING THE ADDITIONAL REINFORCING BARS SHALL BE SPACED AT 100 ON CENTER.
2. ADDITIONAL REINFORCING PARALLEL TO THE SLAB/WALL REINFORCING SHALL BE #15 BARS THAT PROVIDE A STEEL AREA ON EACH SIDE OF THE OPENING EQUAL TO 1/2 THE AREA OF THE REINFORCING CUT BY THE OPENING.
3. FOR OPENINGS WITH SIDES OR DIAMETERS LESS THAN 300 SPREAD THE SLAB/WALL REINFORCING TO CLEAR THE OPENING.

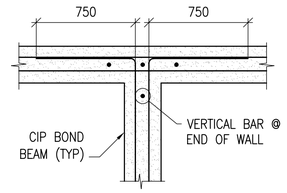

BOND BEAM INTERSECTION

5/S6 CIP BOND BEAM DETAIL

SCALE: NTS

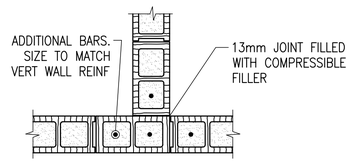

INTERSECTION

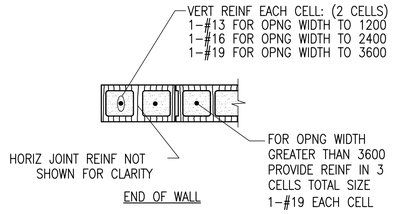

END OF WALL

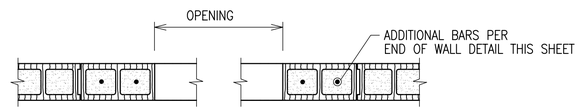

MASONRY OPENING W/ LINTEL

NOTES:

1. OPENING WIDTH SHALL NOT EXCEED 3600 FOR THIS TYPE OF JAMB
2. ALL CMU CELLS FULLY GROUTED

6/S6 TYPICAL CMU DETAILS

SCALE: NTS

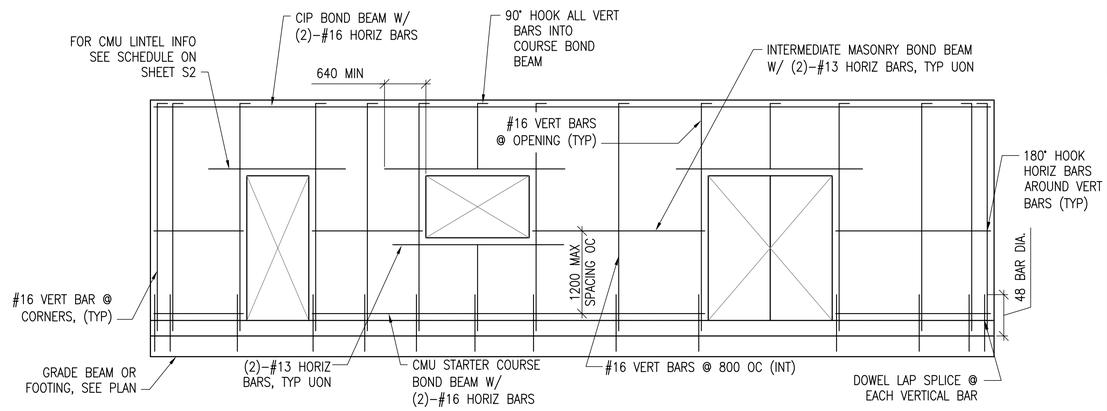

7/S6 MIN CMU WALL REINFORCING

SCALE: NTS

LINTEL NOTES:

CMU LINTEL REINFORCEMENT AS PER SCHEDULE ON SHEET S2

UNLESS OTHERWISE NOTED, LINEAR DIMENSIONS SHOWN ARE IN MILLIMETERS (MM)

US Army Corps of Engineers
Afghanistan Engineer District

SYMBOL	DESCRIPTION	DATE	APR

DATE: 09-30-09
SUBMITTED BY: BAKER
FILE NO.: ANPSDS-506XXX
DESIGNED BY: GDH
DWN BY: RCG
CHK BY: CWW

Michael Baker Jr., Inc.
A unit of Michael Baker Corporation
Airside Business Park
100 Airside Drive
Moon Township, PA 15108
www.mbakercorp.com

AFGHAN NATIONAL POLICE
STANDARD DESIGN
SECURE STORAGE

TYPICAL DETAILS

SHEET REFERENCE NUMBER:
S6

100% SUBMISSION

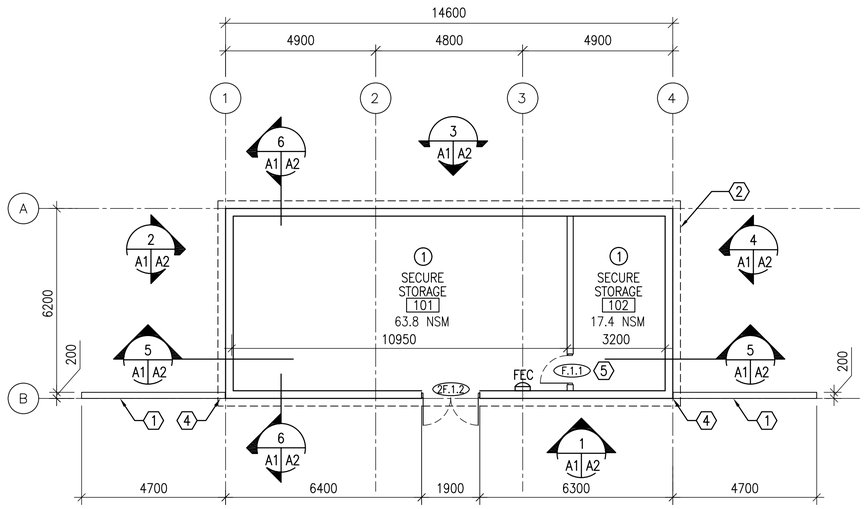

1 A1 A1 FLOOR PLAN
SCALE: 1:100
90.5 GSM

N

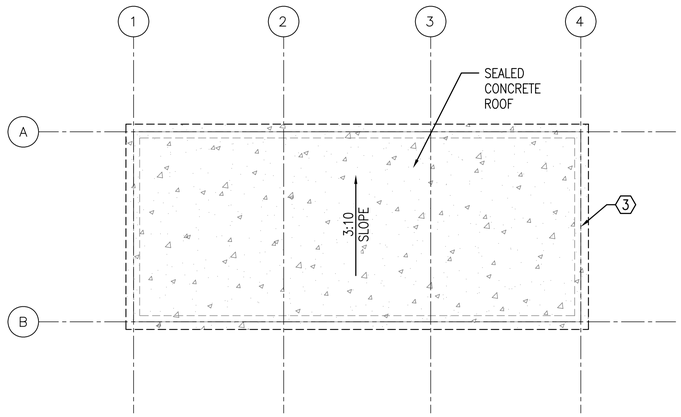

2 A1 A1 ROOF PLAN
SCALE: 1:100

N

GENERAL NOTES:

A. INTERIOR PARTITION SHALL BE 200 MM CMU UNLESS NOTED OTHERWISE.

B. OPENINGS FOR DOORS SHALL BE LOCATED 200 MM FROM THE ADJACENT WALL UNLESS NOTED OTHERWISE.

C. SURFACES TO BE PAINTED SHALL BE CLEAN AND FREE OF FOREIGN MATTER BEFORE APPLICATION OF PAINT. CLEANING SHALL BE SCHEDULED SO THAT DUST AND OTHER CONTAMINANTS WILL NOT FALL ON WET, NEWLY PAINTED SURFACES.

D. CONCRETE AND INTERIOR MASONRY SURFACES GROUTED SOLID SHALL BE ALLOWED TO DRY AT LEAST 30 DAYS BEFORE PAINTING EXCEPT CONCRETE SLAB ON GRADE WHICH SHALL BE ALLOWED TO CURE 90 DAYS BEFORE PAINTING.

E. PAINTS CONTAINING LEAD IN EXCESS OF 0.06 PERCENT BY WEIGHT OF THE TOTAL NONVOLATILE CONTENT SHALL NOT BE USED.

F. MERCURIAL FUNGICIDES SHALL NOT BE USED IN OIL–BASE PAINT.

G. REMOVE LOOSE DIRT AND CLEAN SURFACES BEFORE PAINTING. APPLY PAINT TO INTERIOR STRUCTURAL RIGID FRAMINGS AND CEILINGS AND TEST FOR ADHESION. PRIMER COAT FOR MASONRY. INITIAL FIRST COAT WITH AN ACRYLIC LATEX PAINT FOR EXTERIOR SURFACES AND A SECOND COAT WITH A WATER REPELLENT ACRYLIC LATEX PAINT.

H. METAL DOORS AND FRAMES SHALL RECEIVE A PRIMER COAT PLUS TWO COATS OF PAINT.

I. DIMENSIONS ARE TO STRUCTURAL COLUMN GRID, EDGE OF WINDOW OPENINGS, AND TO HINGE SIDE OF DOOR OPENINGS.

KEY NOTES: (X)

1. CONCRETE WING WALL
2. LINE OF ROOF OVERHANG ABOVE
3. LINE OF BUILDING WALL BELOW
4. EXPANSION JOINT BETWEEN BUILDING WALL AND WING WALLS.
5. PROVIDE UNDERCUT INTERIOR DOOR BETWEEN ROOMS 101 AND 102. RE: MECHANICAL

LEGEND:

F.1.4 DOOR TYPE, SEE SHEET A3

(X) KEY NOTE

FEC FIRE EXTINGUISHER CABINET

(1) ROOM FINISH TYPE DESIGNATION

(X)

ROOM FINISHES:

1. WALLS: PAINTED PLASTER,
   FLOOR: SEALED CONCRETE
   CEILING: PAINTED PLASTER APPLIED TO STRUCTURE

UNLESS OTHERWISE NOTED, LINEAR DIMENSIONS SHOWN ARE IN MILLIMETERS (MM)

0 2000 4000 8000

SCALE: 1: 100

US Army Corps of Engineers
Afghanistan Engineer District

SYMBOL	DESCRIPTION	DATE	APR

DESIGNED BY: BAKER
DWN BY: JEB
CHK BY: NLJ
DATE: 09–30–09
SUBMITTED BY: BAKER
FILE NO.: ANPSDA–101XXX

Michael Baker Jr., Inc
A unit of Michael Baker Corporation
Airside Business Park
100 Airside Drive
Moon Township, PA 15108
www.mbakercorp.com

AFGHAN NATIONAL POLICE
STANDARD DESIGN
SECURE STORAGE

FLOOR AND ROOF PLANS

SHEET REFERENCE NUMBER:
A1

100% SUBMISSION

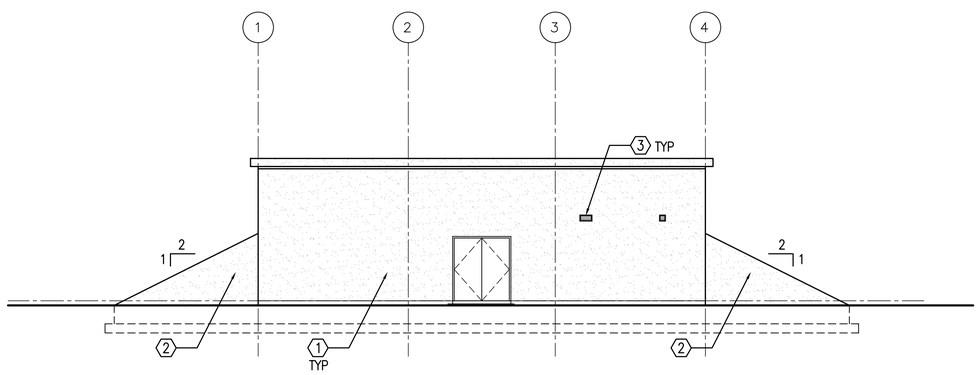

1 A1 A2 EAST ELEVATION
SCALE: 1:100

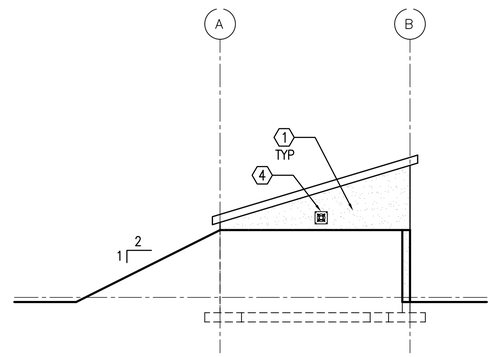

2 A1 A2 SOUTH ELEVATION
SCALE: 1:100

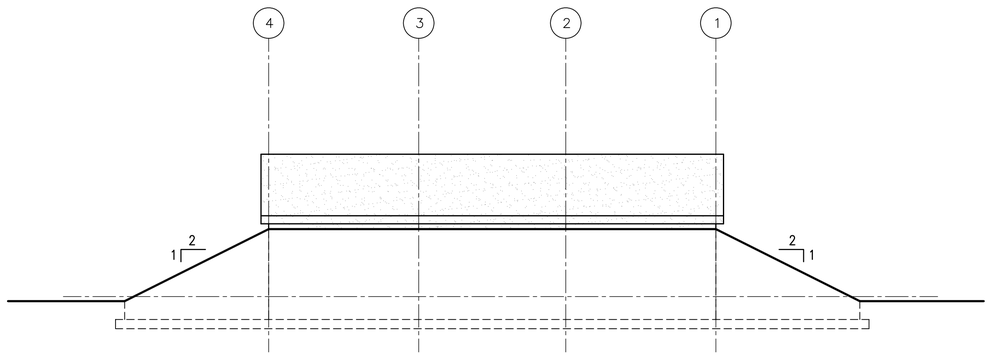

3 A1 A2 WEST ELEVATION
SCALE: 1:100

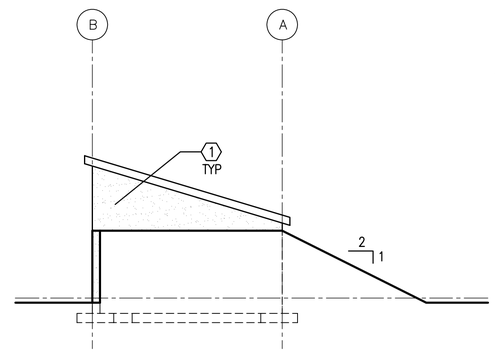

4 A1 A2 NORTH ELEVATION
SCALE: 1:100

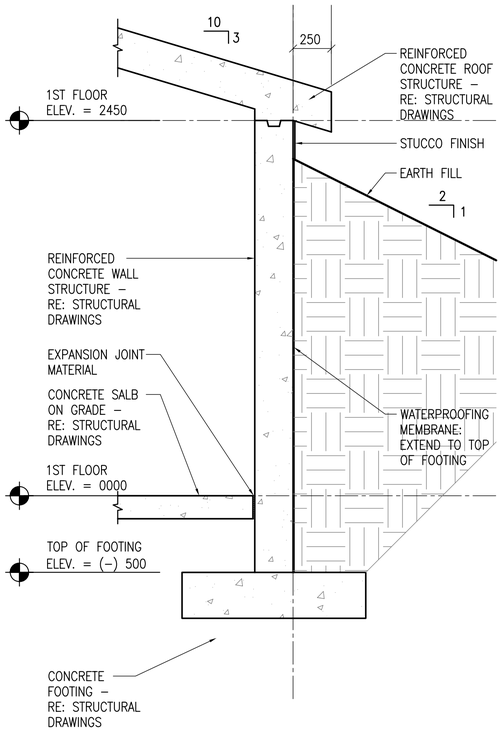

7 A2 A2 WALL SECTION
SCALE: 1:20

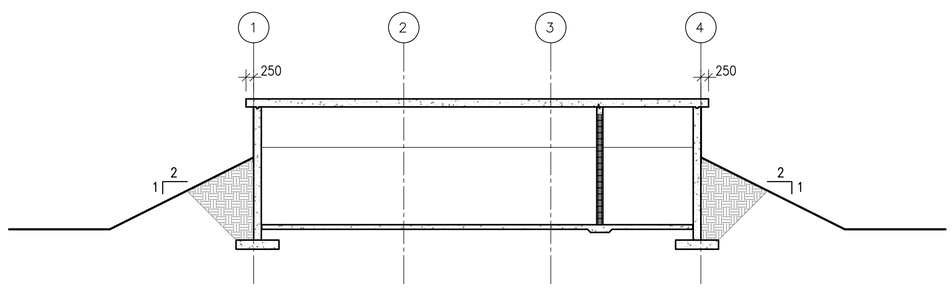

5 A1 A2 LONGITUDINAL BUILDING SECTION
SCALE: 1:100

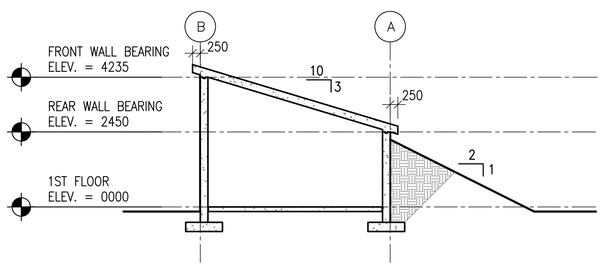

6 A1 A2 TRANSVERSE BUILDING SECTION
SCALE: 1:100

KEY NOTES: (X)

1. STUCCO ON CONCRETE WALLS
2. STUCCO ON CONCRETE WING WALLS
3. LOUVER – RE: MECHANICAL
4. EXHAUST FAN – RE: MECHANICAL

UNLESS OTHERWISE NOTED, LINEAR DIMENSIONS SHOWN ARE IN MILLIMETERS (MM)

0 400 800 1600
SCALE: 1: 20

0 2000 4000 8000
SCALE: 1: 100

US Army Corps of Engineers
Afghanistan Engineer District

SYMBOL	DESCRIPTION	DATE	APR

DESIGNED BY: BAKER		DATE: 09-30-09	
DWN BY: JEB		SUBMITTED BY: BAKER	
CHK BY: NLJ		FILE NO.: ANPSDA-102XXX	

Michael Baker Jr., Inc
A unit of Michael Baker Corporation
Airside Business Park
100 Airside Drive
Moon Township, PA 15108
www.mbakercorp.com

AFGHAN NATIONAL POLICE
STANDARD DESIGN
SECURE STORAGE

EXTERIOR ELEVATIONS,
BUILDING SECTIONS & WALL SECTION

SHEET REFERENCE NUMBER:
A2

100% SUBMISSION

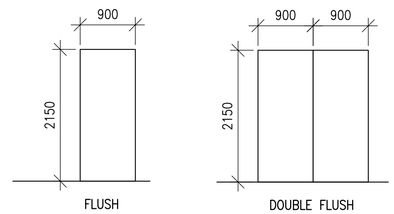

F 2F

1 A3 A3 DOOR TYPES
SCALE: 1:50

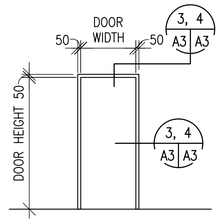

1

2 A3 A3 FRAME TYPES
SCALE: 1:50

DOOR TYPES NOTES:

1. INTERIOR AND EXTERIOR METAL DOORS AND FRAME COLORS SHALL MATCH ADJACENT WALL COLORS AS SELECTED BY THE CONTRACTING OFFICER.
2. HARDWARE SHALL BE HEAVY DUTY, COMMERCIAL GRADE, STAINLESS STEEL WITH A MATTE FINISH.
3. FRAMES, EXCEPT FIRE-RATED FRAMES, SHALL BE MOUNTED AND ADJUSTED IN ACCORDANCE WITH MANUFACTURER'S INSTRUCTIONS. FRAMES SHALL BE FASTENED WITH MINIMUM OF THREE FASTENING POINTS PER SIDE AT REGULAR INTERVALS.
4. DIMENSIONS SHOWN ON DOOR SCHEDULE ARE BASED UPON MODULAR MASONRY (OR ROUGH OPENING), HEIGHT OF 2200mm FOR STANDARD PERSONNEL DOORS. CONTRACTOR SHALL COORDINATE WITH DOOR SUPPLIER TO ENSURE THAT DIMENSIONS OF DOORS AND FRAMES PROVIDED ARE COMPATIBLE WITH DOOR OPENING DIMENSIONS.

HARDWARE TYPES:

HW-1 1-1/2 PR HINGES
1 EA LOCKSET W/LEVERS. GRADE 1, F93
1 EA CYLINDER, GRADE 1
1 EA HEAVY DUTY HASP, WELDED TO EXTERIOR FACE
1 EA THRESHOLD J32130

HW-2 3 PR HINGES
1 EA LOCKSET W/LEVERS. GRADE 1, F93
1 EA CYLINDER. GRADE 1
1 EA HEAVY DUTY HASP WELDED TO EXTERIOR FACE
2 EA FLSUH BOLTS
1 EA REMOVEABLE ASTRAGAL
1 EA THRESHOLD J32130

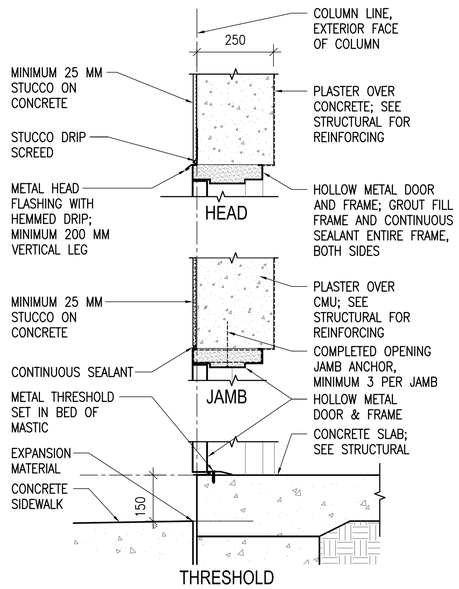

3 A3 A3 EXTERIOR DOOR DETAILS
SCALE: 1:10

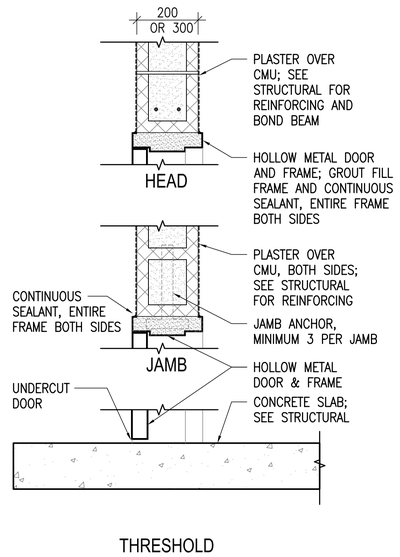

4 A3 A3 INTERIOR DOOR DETAILS
SCALE: 1:10

UNLESS OTHERWISE NOTED, LINEAR DIMENSIONS SHOWN ARE IN MILLIMETERS (MM)

0 200 400 800
SCALE: 1: 10

0 1000 2000 4000
SCALE: 1: 50

US Army Corps of Engineers
Afghanistan Engineer District

SYMBOL	DESCRIPTION	DATE	APR

DESIGNED BY: BAKER	DATE: 09-30-09
DWN BY: AR	SUBMITTED BY: BAKER
CHK BY: KRC	FILE NO.: ANPSDA-303XXX

Michael Baker Jr., Inc
A unit of Michael Baker Corporation
Airside Business Park
100 Airside Drive
Moon Township, PA 15108
www.mbakercorp.com

AFGHAN NATIONAL POLICE
STANDARD DESIGN
SECURE STORAGE

DOOR & WINDOW TYPES & DETAILS

SHEET REFERENCE NUMBER:
A3

100% SUBMISSION

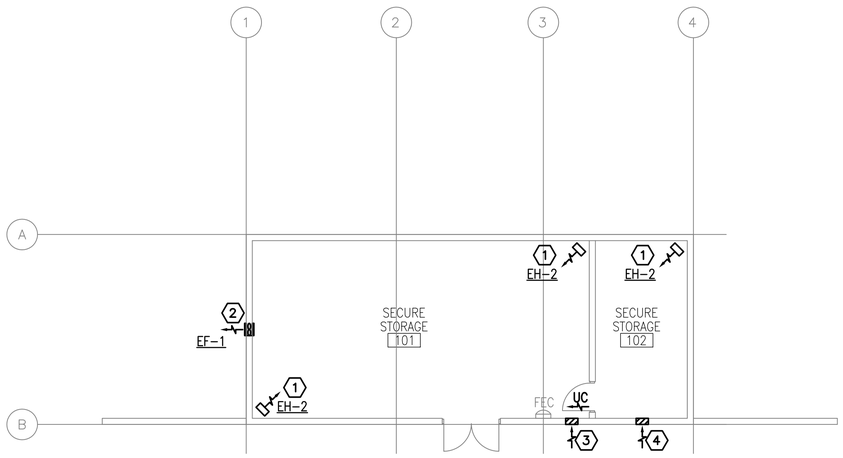

1 M1 M1 HVAC PLAN

SCALE: 1:100

N

GENERAL NOTES:

1. DO NOT SCALE DRAWINGS – ALL DIMENSIONS AND CONDITIONS SHALL BE CHECKED AND VERIFIED BY THE CONTRACTOR AT THE SITE.
2. ALL WORK PERFORMED ON THIS BUILDING SHALL BE IN COMPLIANCE WITH ALL PERTINENT CODES, RULES, ORDINANCES AND REGULATIONS OF THE GOVERNING AUTHORITIES.
3. ALL WORK PERFORMED UNDER AND IN CONNECTION WITH THESE DRAWINGS AND SPECIFICATIONS SHALL BE IN STRICT COMPLIANCE WITH THE LATEST SAFETY AND HEALTH STANDARDS.
4. UC – UNDERCUT DOOR (20mm).

EXHAUST FAN SCHEDULE

NO.	TYPE	FAN CMS	DRIVE	HP	SP mmH20	ELECT. CHAR.	SWITCH
EF–1	WALL	0.100	DIRECT	FRACT	13	220/1/50	W/ STAT

NOTES:
1. WALL MOUNTED EXHAUST FAN MOUNT AT 600mm BELOW CEILING.
2. FANS SHALL HAVE LOW LEAKAGE GRAVITY LOUVER AND SECURITY GRILLE.
3. FANS SHALL BE EXPLOSION PROOF.

ELECTRIC UNIT HEATER SCHEDULE

NO.	CMS	KW	F.A.T. °C	ELECT. CHAR.	MOUNTING
EH–2	.200	2.6	33	370/1/50	CEILING HUNG

NOTES:
1. HEATERS SHALL BE EXPLOSION PROOF.

NUMBERED NOTE:

1. EXPLOSION PROOF ELECTRIC UNIT HEATER SUSPENDED FROM STRUCTURE ABOVE.
2. WALL MOUNTED EXHAUST FAN.
3. 200x400 (8x16) LOW LEAKAGE GRAVITY WALL LOUVER FOR INTAKE. PROVIDE WEATHER PROOF LOUVER W/0.05mm (2") WASH DOWN FILTER AND SAND TRAP.
4. 200x200 (8x8) GRAVITY LOW LEAKAGE EXTERIOR LOUVER. SUPPLIED AND INSTALLED BY EC.

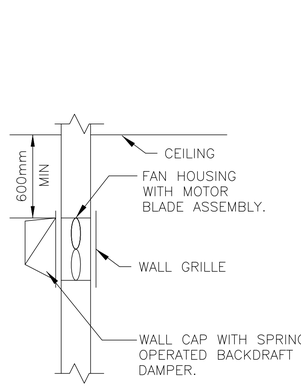

WALL MOUNTED EXHAUST FAN DETAIL

N.T.S.

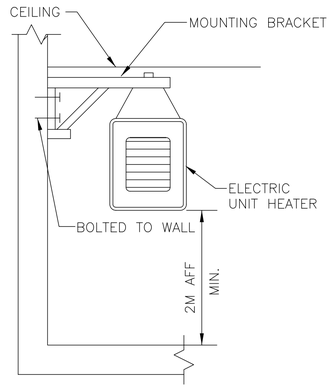

ELECTRIC UNIT HEATER MOUNTING

N.T.S.

US Army Corps of Engineers

Afghanistan Engineer District

SYMBOL	DESCRIPTION	DATE	APR

DESIGNED BY: RML
DATE: 09-30-09
DWN BY: JJN
SUBMITTED BY: BAKER
CHK BY: CJM
FILE NO.: ANPSDM-101XXX

Michael Baker Jr., Inc
A unit of Michael Baker Corporation
Airside Business Park
100 Airside Drive
Moon Township, PA 15108
www.mbakercorp.com

AFGHAN NATIONAL POLICE
STANDARD DESIGN
SECURE STORAGE

HVAC PLAN

SHEET REFERENCE NUMBER:

M1

100% SUBMISSION

POWER

- DISTRIBUTION PANELBOARD
- NEW PANELBOARD – SURFACE
- NEW PANELBOARD – RECESSED
- EXISTING PANELBOARD
- GENERATOR
- TVSS — TRANSIENT VOLTAGE SURGE SURPRESSOR
- TRANSFORMER (DRAWN TO SIZE)
- PS — POWER SUPPLY
- CP — CONTROL PANEL
- TC — TIME CLOCK
- TIM — ASTRONOMICAL TIME CLOCK– "SEE SPEC."
- R — RELAY WITH RATING AND NUMBER OF POLES AS NOTED ON DRAWINGS– "SEE SPEC."
- J — JUNCTION BOX
- J — JUNCTION BOX – CEILING
- PB — PULL BOX
- BD — BUS DUCT HORIZONTAL
- BUS DUCT VERTICAL
- EMERGENCY POWER OFF PUSH BUTTON
- NON–FUSIBLE SAFETY SWITCH
- FUSIBLE SAFETY SWITCH
- M — MOTOR
- $M — MOTOR STARTING SWITCH – 20A RATED
- $K — KEY SWITCH – 20A RATED
- FC — FAN COIL – FURNISHED BY MECHANICAL CONTRACTOR, ELECTRICAL CONTRACTOR SHALL INSTALL AND PROVIDE POWER CONNECTION
- UH — UNIT HEATER – FURNISHED BY MECHANICAL CONTRACTOR, ELECTRICAL CONTRACTOR SHALL INSTALL AND PROVIDE POWER CONNECTION
- D — JUNCTION BOX FOR CONNECTION TO GARBAGE DISPOSAL
- CF — LIGHT/HEATER/FAN – FURNISHED BY MECHANICAL CONTRACTOR, ELECTRICAL CONTRACTOR SHALL INSTALL AND PROVIDE POWER CONNECTION
- ELECTRIC WATER HEATER
- EPO — WEATHERPROOF / EXPLOSION PROOF EMERGENCY POWER OFF PUSH–BUTTON TO BE INTERCONNECTED WITH GENERATOR SHUT DOWN CONTROL
- CF — CEILING FAN – REFER TO SPECIFICATION SECTION 26 20 00

RECEPTACLES

- DUPLEX 20A BRITISH STANDARD UNSWITCHED SOCKETS
- GF — DUPLEX 20A BRITISH STANDARD UNSWITCHED SOCKETS – 10mA GROUND FAULT INTERRUPTER TYPE
- WP — DUPLEX 20A BRITISH STANDARD UNSWITCHED SOCKETS – 10mA GROUND FAULT INTERRUPTER TYPE WITH WEATHERPROOF COVER
- EXP — DUPLEX 20A BRITISH STANDARD UNSWITCHED SOCKETS – EXPLOSION PROOF
- * — INDICATES MOUNT DEVICE ABOVE COUNTER TOP

LIGHTNING PROTECTION

- AIR TERMINAL 20mm O.D. X 4m SOLID COPPER, NICKEL PLATED ON ADHESIVE BASE.
- EQ — EQUIPMENT AIR TERMINAL
- TEST WELL WITH GROUND ROD(S)
- GROUND ROD
- G — GROUND PLATE
- G — MAIN GROUND CONDUCTER CONCEALED WITHIN CONSTRUCTION
- G — MAIN GROUND CONDUCTOR EXPOSED ON EXPOSED ON BUILDING EXTERIOR SURFACE
- G — GROUND CONDUCTOR CAD WELDED TO GROUND CABLE OR EQUIPMENT
- G — GROUND CONDUCTOR CAD WELDED TO BUILDING STEEL COLUMN
- GROUND ROD TRIPOD, SPACED 10 FEET APART.
- LEVEL TO LEVEL CABLE

LIGHTING

- LIGHTING FIXTURE – SEE FIXTURE SCHEDULE FOR MORE INFORMATION
- LIGHTING FIXTURE – SEE FIXTURE SCHEDULE FOR MORE INFORMATION
- DOWNLIGHT
- LIGHTING FIXTURE ON NORMAL/EMERGENCY
- WALL MOUNTED LIGHT FIXTURE
- E — EXIT SIGN – DIRECTIONAL ARROWS AS INDICATED ON DRAWINGS
- B — BATTERY PACK WITH HEADS AS INDICATED ON DRAWINGS
- REMOTE HEAD FOR BATTERY PACK
- $ — SINGLE POLE SWITCH – 20A RATED
- $3 — 3–WAY SWITCH – 20A RATED
- $4 — 4–WAY SWITCH – 20A RATED
- PC — PHOTOCELL VOLTAGE TO MATCH CIRCUITRY
- LC — LIGHTING CONTACTOR
- POLE MOUNTED SITE LIGHTING FIXTURE– NUMBER OF FIXTURES PER POLE AS INDICATED ON DRAWINGS
- EXTERIOR DIRECTIONAL LIGHTING FIXTURE
- a — SMALL CASE LETTERS REPRESENTS LAMP(S) / SWITCHES. WHEN USED WITH AN OCCUPANCY SENSOR THIS INDICATES SENSOR WITH MANUAL OVERRIDE SWITCH

TELECOMMUNICATIONS

- TELEPHONE OUTLET(S) @ 18" AFF. U.N.O. WITH 3/4" RACEWAY TERMINATED ABOVE NEAREST ACCESSIBLE CEILING OR TO TELEPHONE TERMINAL BOARD IF NO ACCESSIBLE CEILING AVAILABLE. SEE TELE/DATA RISER DIAGRAM FOR OUTLET AND CABLE DESCRIPTION
- DATA OUTLET(S) @ 18" AFF. U.N.O. WITH 3/4" RACEWAY TERMINATED ABOVE NEAREST ACCESSIBLE CEILING OR TO DATA EQUIPMENT RACK IF NO ACCESSIBLE CEILING AVAILABLE. SEE TELE/DATA RISER DIAGRAM FOR OUTLET AND CABLE DESCRIPTION

TELECOMMUNICATIONS (CONTINUED)

- COMBINATION TELEPHONE/DATA OUTLET(S) @ 18" AFF. U.N.O. WITH 1" RACEWAY TERMINATED ABOVE NEAREST ACCESSIBLE CEILING OR TO TELE/DATA TERMINAL AREA IF NO ACCESSIBLE CEILING AVAILABLE. SEE TELE/DATA RISER DIAGRAM FOR OUTLET AND CABLE DESCRIPTION
- W — WALL MTD. TELEPHONE OUTLET WITH 3/4" RACEWAY TERMINATED ABOVE NEAREST ACCESSIBLE CEILING OR TO TELEPHONE TERMINAL BOARD IF NO ACCESSIBLE CEILING AVAILABLE. SEE TELE/DATA RISER DIAGRAM FOR OUTLET AND CABLE DESCRIPTION
- (x)T — INDICATES NUMBER OF TELEPHONE OUTLET(S) AND ASSOCIATED CABLING
- (x)D — INDICATES NUMBER OF DATA OUTLET(S) AND ASSOCIATED CABLING
- (x)TF — INDICATES NUMBER OF TELEPHONE OUTLETS AND ASSOCIATED CABLING WITH 1 OUTLET AND CABLE DEDICATED FOR FAX

SINGLE LINE SYMBOLS

- SWITCH
- BREAKER
- FUSE
- TRANSFORMER
- CAPACITOR
- GROUND
- CONTACT (NORMALLY OPEN)
- CONTACT (NORMALLY CLOSED)
- AUTOMATIC TRANSFER SWITCH
- MANUAL DOUBLE THROW SWITCH
- CURRENT TRANSFORMER
- INDICATES NEW ELECTRICAL EQUIPMENT
- C — INDICATES NEW CONTROL WIRING AND CONDUIT
- EQUIPMENT OUTLINE

MISCELLANEOUS

- BRANCH CIRCUIT WIRING CONCEALED ABOVE CEILINGS, SURFACE MOUNTED ON WALLS
- BRANCH CIRCUIT WIRING – #10 AWG
- BRANCH CIRCUIT WIRING – UNDER FLOOR
- HOME RUN BACK TO PANEL
- CONDUIT TURNED DOWN
- CONDUIT TURNED UP
- LV — LOW VOLTAGE WIRING AND CONDUIT
- CT–X — CABLE TRAY ("X" DENOTES WIDTH)
- INDICATES CONTINUATION OF LINE

FIRE ALARM

- FACP — FIRE ALARM CONTROL PANEL WITH BATTERY BACKUP
- F — FIRE ALARM PULL STATION

FIRE ALARM (CONTINUED)

- F — FIRE ALARM STROBE – WALL MOUNTED
- F — FIRE ALARM AUDIBLE/STROBE – WM
- F — FIRE ALARM HORN/STROBE – WM
- S — SMOKE DETECTOR
- H — HEAT DETECTOR CEILING MOUNTED
- D — DUCT DETECTOR – PROVIDED BY EC, INSTALLED BY MC AND CONNECTED BY EC

DENOTATIONS & ABBREVIATIONS

AFF	ABOVE FINISHED FLOOR
C	CEILING MOUNTED
E	EMERGENCY
EC	ELECTRICAL CONTRACTOR
EPO	EMERGENCY POWER OFF
EXP	EXPLOSION PROOF
F	FIRE ALARM
FF	FLUSH FLOOR MOUNTED
FL	FLUORESCENT
FO	FIBER OPTIC
FSS	FUSED SAFETY SWITCH
G	GROUND FAULT INTERRUPTER
GC	GENERAL CONTRACTOR
HOA	HAND–OFF AUTO
I	INFRARED
ICD	INCANDESCENT
IG	ISOLATED GROUND
K	KEY
LV	LOW VOLTAGE
M	MOTOR
MC	MECHANICAL CONTRACTOR
NE	NORMAL/EMERGENCY
NFSS	NON–FUSED SAFETY SWITCH
PA	PAGING SYSTEM
PLC	PLUMBING CONTRACTOR
REL	RELOCATE
RED	RELOCATED
SL	SINGLE LINE
SS	SURGE SUPPRESSION
T	TELEPHONE
TL	TWIST LOCK

DENOTATIONS & ABBREVIATIONS (CONT.)

TP	TAMPER PROOF
UE	UNDERGROUND ELECTRIC
UF	UNDERGROUND FIBER
UT	UNDERGROUND TELEPHONE
W	WALL MOUNTED
WG	WIRE GUARD
WP	WEATHERPROOF
WPG	WEATHERPROOF/GROUND FAULT INTERRUPTER
WT	WATER TIGHT

GENERAL PROJECT NOTES:

G1. UNLESS OTHERWISE NOTED, PROVIDE ALL EQUIPMENT SHOWN ON THE PLANS. THE ELECTRICAL CONTRACTOR SHALL COORDINATE ALL SYMBOLS SHOWN ON THE PLANS WITH THE SYMBOL LIST. IT SHALL BE THE RESPONSIBILITY OF THE CONTRACTOR TO VERIFY THE INTENT OF ANY SYMBOL THAT IS SHOWN ON THE PLANS AND NOT INDICATED ON THE SYMBOL LIST WITH THE ENGINEER PRIOR TO BID.

G2. COORDINATE THE FINAL LOCATIONS OF ALL LIGHT FIXTURES WITH THE ARCHITECT'S REFLECTED CEILING PLANS. REPORT ANY DISCREPANCIES TO THE ARCHITECT PRIOR TO INSTALLATION.

G3. THE CONTRACTOR SHALL VERIFY THE LOCATION OF ALL UNDERGROUND UTILITIES WITHIN THE CONSTRUCTION AREA THREE (3) WORKING DAYS NOTICE BEFORE COMMENCE DIGGING. NOTIFY THE LOCAL OR STATE AUTHORITY HAVING JURISDICTION AND WAIT THE REQUIRED TIME BEFORE COMMENCING TO DIG.

G4. THE CONTRACTOR SHALL COORDINATE CONDUIT RUNS, CABLE TRAY, LIGHTING FIXTURES AND OTHER EQUIPMENT LOCATIONS WITH THE OTHER TRADE CONTRACTORS TO AVOID CONFLICTS.

G5. WHERE VOLTAGES AND FREQUENCIES ON THE DRAWINGS AND IN THE SPECIFICATIONS DIFFER FROM THE LOCAL ONES, ALL WORK SHALL BE PERFORMED USING THE LOCAL VOLTAGES AND FREQUENCIES.

G6. THE MINIMUM WIRE SIZE ON THE PROJECT SHALL BE 4mm2. THE MINIMUM CONDUIT SIZE SHALL BE 20mm. THE MINIMUM BREAKER SIZE SHALL BE 20 AMPS.

G7. THE CONTRACTOR SHALL PUT A MAXIMUM OF 6 DUPLEX SOCKETS ON A 20A SINGLE POLE CIRCUIT.

G8. WHERE THE 1010 SCOPE REVIEW, 1015 TECHNICAL REVIEW, DRAWINGS, AND SPECIFICATIONS DIFFER FROM AMERICAN CODES OR STANDARDS THE 1010, 1015, DRAWINGS, AND SPECIFICATIONS SHALL RULE.

G9. WORK FOR THE SECURE STORAGE SHALL BE DONE IN ACCORDANCE WITH DEPARTMENT OF DEFENSE STANDARD DOD 6055.9–STD.

G10. ALL CONDUIT AND DEVICES SHALL BE SURFACE MOUNTED UNLESS OTHERWISE INDICATED.

US Army Corps of Engineers
Afghanistan Engineer District

SYMBOL	DESCRIPTION	DATE	APR

DESIGNED BY: JRG
DATE: 09-30-09
DWN BY: JRG
SUBMITTED BY: BAKER
CHK BY: JRG
FILE NO.: ANPSDE-000XXX

Michael Baker Jr., Inc.
A unit of Michael Baker Corporation
Airside Business Park
100 Airside Drive
Moon Township, PA 15108
www.mbakercorp.com

AFGHAN NATIONAL POLICE
STANDARD DESIGN
SECURE STORAGE

ELECTRICAL SYMBOLS AND ABBREVIATIONS

SHEET REFERENCE NUMBER:
E0

100% SUBMISSION

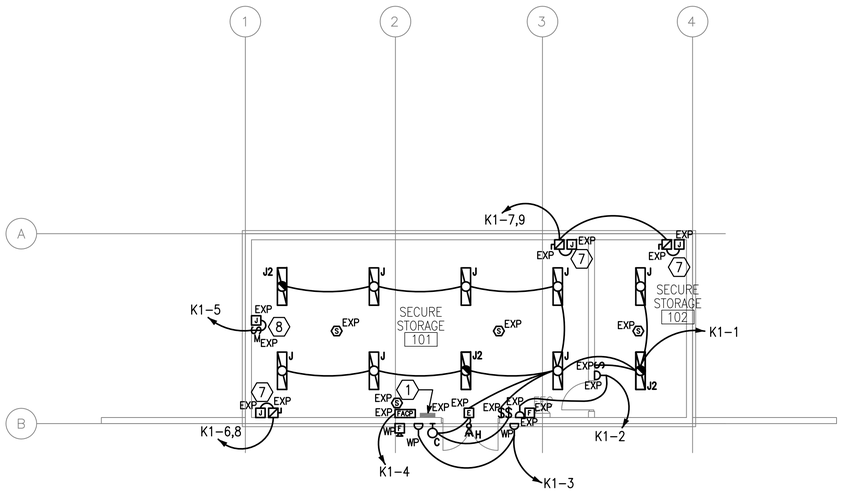

1 E1 E1 LIGHTING AND POWER PLAN

SCALE: 1:100

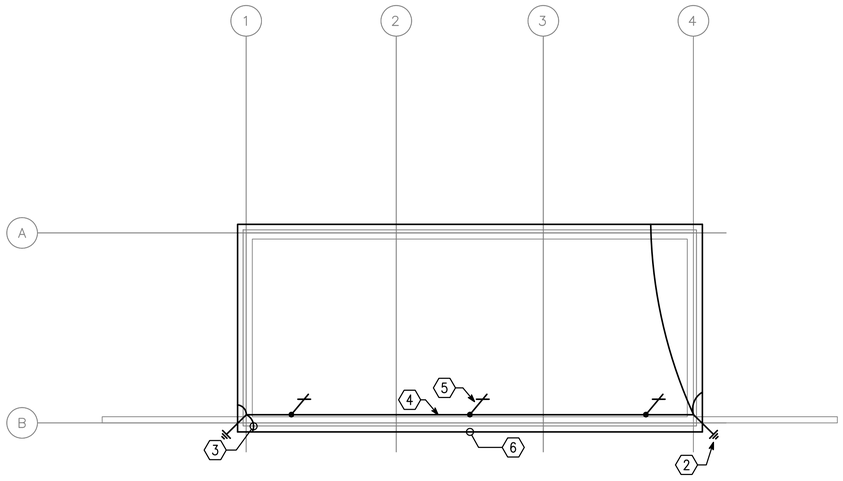

2 E1 E1 ROOF LIGHTNING PROTECTION PLAN

SCALE: 1:100

GENERAL NOTES:

1. REFER TO DRAWING #E0 FOR THE ELECTRICAL SYMBOLS LIST.
2. EXIT SIGNS SHALL BE WIRED AHEAD OF ANY LOCAL SWITCHING ON CIRCUITS.
3. REFER TO DRAWING #E3 FOR THE LIGHTING FIXTURE SCHEDULE.
4. REFER TO DRAWING #E2 FOR THE POWER RISER.
5. REFER TO DRAWING #E4 FOR PANEL SCHEDULES.
6. LIGHT FIXTURES INDICATED AS EMERGENCY SHALL BE PROVIDED WITH A BATTERY BACKUP BALLAST.
7. COORDINATE EXACT MOUNTING LOCATION OF DISCONNECTING MEANS FOR MECHANICAL AND PLUMBING EQUIPMENT IN THE FIELD.
8. FUSIBLE SAFETY SWITCHES THAT ARE NOT OTHERWISE IDENTIFIED SHALL BE 380V, 1P, 30A FUSED SAFETY SWITCHES WITH 20A FUSES.
9. ALL PANELS, DEVICES, EQUIPMENT, ETC. SHALL BE EXPLOSION-PROOF OR SHALL BE PROVIDED WITH AN EXPLOSION-PROOF ENCLOSURE. ALL WORK IN THIS BUILDING SHALL BE IN ACCORDANCE WITH NEC ARTICLE 511. EXPLOSION PROOF EQUIPMENT SHALL BE USED FOR ALL FIXTURES AND DEVICES. PROVIDE CONDUIT SEALS WHERE REQUIRED. ALL WIRING SHALL BE IN ACCORDANCE WITH NEC ARTICLE 501. FOR CLASS I LOCATIONS.

NUMBERED NOTES:

1. PANEL K1 WITH NEMA 4X EXPLOSION-PROOF COVER.
2. INSTALL DOWN CONDUCTOR IN 25MM SCHEDULE 80 PVC CONDUIT TO 20MM DIAMETER X 3 METERS SOLID COPPER TINNED GROUND ROD. (TYPICAL)
3. CADWELD TO BUILDING STRUCTURE AT 18 METERS ON CENTER AROUND THE ENTIRE PERIMETER OF THE BUILDING. (TYPICAL)
4. 120mm LIGHTNING PROTECTION CABLE.
5. AIR TERMINAL. (TYPICAL)
6. (1) 120.0MM2 BARE, TINNED, COPPER COUNTERPOISE GROUND 700MM BELOW GRADE.
7. PROVIDE POWER CONNECTION TO ELECTRIC UNIT HEATER #2. SEE DRAWINGS #M1 AND #E4 FOR MORE INFORMATION.
8. PROVIDE POWER CONNECTION TO EXHAUST FANS. SEE DRAWINGS #M1 AND #E4 FOR MORE INFORMATION.

UNLESS OTHERWISE NOTED, LINEAR DIMENSIONS SHOWN ARE IN MILLIMETERS (MM)

1 0 1 2 3 4 5 6 7 8 9

1:100

US Army Corps of Engineers

Afghanistan Engineer District

SYMBOL	DESCRIPTION	DATE	APR

DESIGNED BY: JRG
DATE: 09-30-09
DWN BY: JRG
SUBMITTED BY: BAKER
CHK BY: JRG
FILE NO.: ANPSDE-101XXX

Michael Baker Jr., Inc
A unit of Michael Baker Corporation
Airside Business Park
100 Airside Drive
Moon Township, PA 15108
www.mbakercorp.com

AFGHAN NATIONAL POLICE
STANDARD DESIGN
SECURE STORAGE

LIGHTING AND POWER PLAN

SHEET REFERENCE NUMBER:

E1

100% SUBMISSION

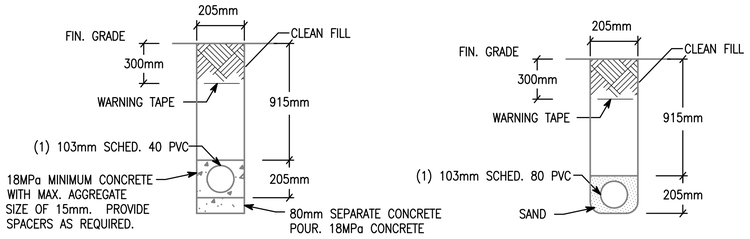

NOTE: PVC CONDUIT SHALL BE DIRECT BURIED SCHEDULE 80 FOR NO TRAFFIC AREAS AND CONCRETE-ENCASED SCHEDULE 40 FOR UNDER ROADWAYS OR TRAFFIC AREAS.

1 E2 | E2 TYPICAL DUCT BANK DETAILS FOR CONDUIT IN SAND OR CONCRETE

SCALE: N.T.S.

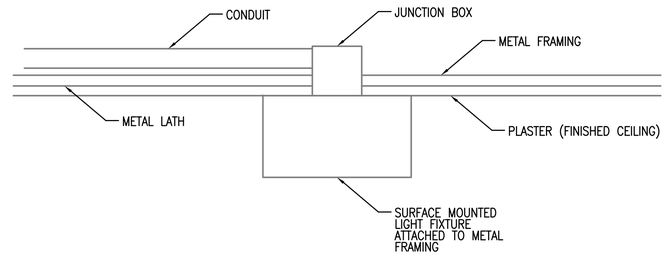

2 E2 | E2 TYPICAL DETAIL FOR SURFACE MOUNTED LIGHT FIXTURES

SCALE: N.T.S.

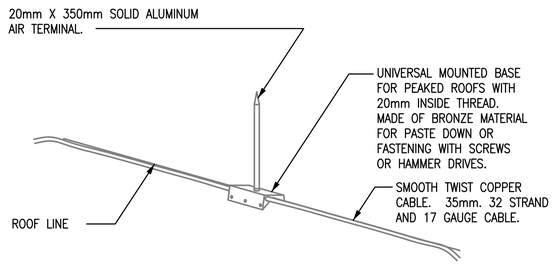

3 E2 | E2 LIGHTNING PROTECTION AIR TERMINAL DETAIL

SCALE: N.T.S.

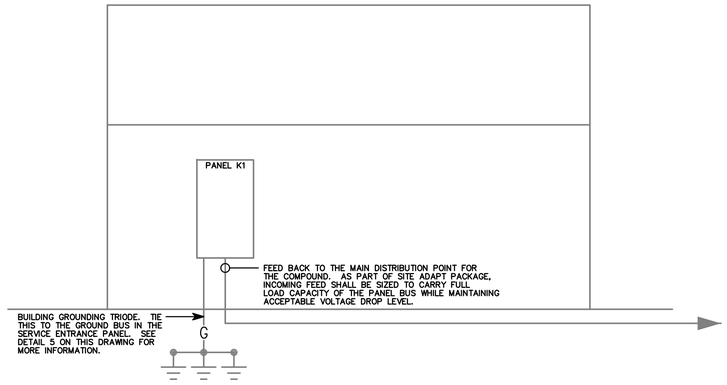

4 E2 | E2 B.1 RISER DIAGRAM

SCALE: N.T.S.

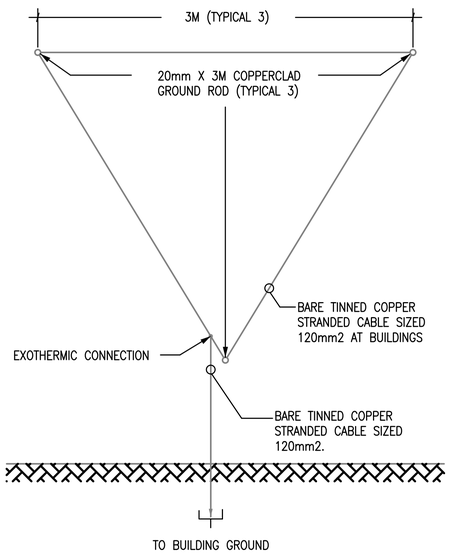

5 E2 | E2 GROUND TRIPOD SYSTEM DETAIL - PLAN

SCALE: N.T.S.

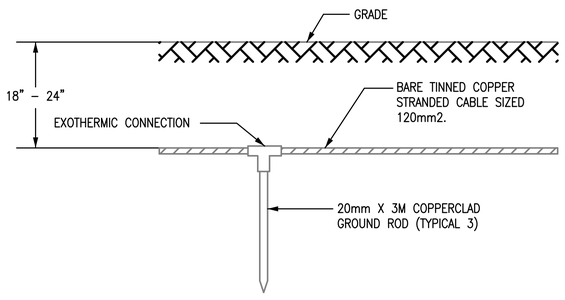

6 E2 | E2 GROUND TRIPOD SYSTEM DETAIL - ELEVATION

SCALE: N.T.S.

US Army Corps of Engineers
Afghanistan Engineer District

SYMBOL	DESCRIPTION	DATE	APR

DESIGNED BY: JRG	DATE: 09-30-09		
DWN BY: JRG	SUBMITTED BY: BAKER		
CHK BY: JRG	FILE NO.: ANPSDE-502XXX		

Michael Baker Jr., Inc
A unit of Michael Baker Corporation
Airside Business Park
100 Airside Drive
Moon Township, PA 15108
www.mbakercorp.com

AFGHAN NATIONAL POLICE
STANDARD DESIGN
SECURE STORAGE

DETAILS

SHEET REFERENCE NUMBER:
E2

100% SUBMISSION

LIGHTING FIXTURE SCHEDULE

FIXTURE MARK	STYLE NUMBER AND TYPE	NUMBER AND TYPE OF LAMPS	VOLTAGE	MOUNTING	NOTES
C	INCANDESCENT ONE PIECE W/ APPROVED LENS STABILIZED HIGH IMPACT POLY CARBONATE.	(1) A19 – 100W INCANDESCENT	220V – 1ø 50HZ	WALL MOUNTED ABOVE EXTERIOR DOORS	
H	REMOTE HEAD EXTERIOR LIGHT HEAD POWERED FROM EXIT SIGN BATTERY– 12V DOUBLE HEAD CORROSION RESISTANT WITH UL34 WEATHERPROOF CONSTRUCTION	(2) 12W/12V HALOGEN LAMP	12V – 1ø 50HZ	EXTERIOR WALL MOUNTED AT TOP OF DOOR HEIGHT	
J	EXPLOSION–PROOF (2) LAMP FIXTURE PROVIDED WITH LAMPS. COPPER FREE, ALUMINUM HOUSING, TEMPERED BOROSILICATE GLASS, AND BIAX LAMPS WITH WIRE GUARD	(2) 40W 3500K BIAX FLUORESCENT LAMPS	220V – 1ø 50HZ	PENDANT MOUNTED FROM SLOPED CEILINGS	FURNISHED WITH LAMPS AND WIRE GUARD
J2	SAME AS FIXTURE 'A' WITH EMERGENCY BALLAST	(2) 40W 3500K BIAX FLUORESCENT LAMPS	220V – 1ø 50HZ	PENDANT MOUNTED FROM SLOPED CEILINGS	FURNISHED WITH LAMPS, WIRE GUARD, EMERGENCY BALLAST WITH SELF TEST SWITCH
E	UNIVERSAL MOUNT ENGINEER GRADE THERMOPLASTIC HOUSING EXIT SIGN WITH LED LAMPS, RED LETTERS 6" IN HEIGHT WITH ARROWS AS INDICATED, WITH 12V CADMIUM BATTERY WITH REMOTE HEAD CAPABILITY	LED LAMPS	220V – 1ø 50HZ	UNIVERSAL MOUNTING	

FIXTURE MARK 'C'

INCANDESCENT ONE PIECE WITH APPROVED LENS, STABILIZED HIGH IMPACT POLY CARBONATE

FIXTURE MARK 'H'

REMOTE HEAD EXTERIOR LIGHT HEAD POWERED FROM EXIT SIGN BATTERY– 12V DOUBLE HEAD CORROSION RESISTANT WITH UL34 WEATHERPROOF CONSTRUCTION

FIXTURE MARK 'E'

UNIVERSAL MOUNT ENGINEER GRADE THERMOPLASTIC HOUSING EXIT SIGN WITH LED LAMPS, RED LETTERS 6" IN HEIGHT WITH ARROWS AS INDICATED, WITH 12V CADMIUM BATTERY

FIXTURE MARK 'J'

EXPLOSION–PROOF (2) LAMP FIXTURE PROVIDED WITH LAMPS. COPPER FREE, ALUMINUM HOUSING, TEMPERED BOROSILICATE GLASS, AND BIAX LAMPS WITH WIRE GUARD

FIXTURE MARK 'J2':
SAME FIXTURE AS 'J' WITH EMERGENCY BALLAST.

US Army Corps of Engineers
Afghanistan Engineer District

SYMBOL	DESCRIPTION	DATE	APR

DESIGNED BY: JRG
DATE: 09-30-09
DWN BY: JRG
SUBMITTED BY: BAKER
CHK BY: JRG
FILE NO.: ANPSDE-603XXX

Michael Baker Jr., Inc.
A unit of Michael Baker Corporation
Airside Business Park
100 Airside Drive
Moon Township, PA 15108
www.mbakercorp.com

AFGHAN NATIONAL POLICE
STANDARD DESIGN
SECURE STORAGE

LIGHT FIXTURE SCHEDULE

SHEET REFERENCE NUMBER:
E3

100% SUBMISSION

PANELBOARD K1 SURFACE MOUNTED ASYM. A.I.C. MIN.
AMP. MAIN LUGS (OR) 100 AMP. MAIN BREAKER W/ 100 AMP. TRIP
CIRCUIT BREAKER TYPE 380/220 VOLTS 3 PHASE 4 WIRE 50 HZ 100 AMP. BUS

CKT. NO.	TRIP AMPS	NO. POLES	WIRE MM 2	GND MM2	CONDUIT MM	LOAD SERVED	LOAD-V.A. A0	LOAD-V.A. B0	LOAD-V.A. C0	LOAD-V.A. A0	LOAD-V.A. B0	LOAD-V.A. C0	LOAD SERVED	CONDUIT MM	GND MM2	WIRE MM2	NO. POLES	TRIP AMPS	CKT. NO.
1	20	1	4.0	4.0	20	LIGHTING - 101, 102	0.6			0.6			RECEPTACLES - 102	20	4.0	4.0	1	20	2
3	20	1	4.0	4.0	20	RECEPTACLES-OUTDOOR		0.6			0.5		F.A.C.P.	20	4.0	4.0	1	20	4
5	20	1	4.0	4.0	20	EF-1			0.2			1.3	EH-2	20	4.0	4.0	2	20	6
7	20	2	4.0	4.0	20	EH-2	1.3			1.3								20	8
9	20							1.3					SPARE				1	20	10
11	20	1				SPARE							SPARE				1	20	12
							1.9	1.9	0.2	1.9	0.5	1.3							

TOTAL CONN. LOAD PER PHASE (KVA): A0 3.8 B0 2.4 C0 1.5

TOTAL CONN. LOAD 7.7 KVA. 70 % DEMAND = ESTIMATED DEMAND LOAD 5.4 SUPPLIED FROM MAIN SWITCHGEAR DISTRIBUTION

• MAIN BREAKER SHALL BE 3P EARTH GROUND TYPE

US Army Corps of Engineers
Afghanistan Engineer District

SYMBOL	DESCRIPTION	DATE	APR

DESIGNED BY: JRG
DWN BY: JRG
CHK BY: JRG
DATE: 09-30-09
SUBMITTED BY: BAKER
FILE NO.: ANPSDE-604XXX

Michael Baker Jr., Inc
A unit of Michael Baker Corporation
Airside Business Park
100 Airside Drive
Moon Township, PA 15108
www.mbakercorp.com

AFGHAN NATIONAL POLICE
STANDARD DESIGN
SECURE STORAGE

PANEL SCHEDULES AND RISER DIAGRAM

SHEET REFERENCE NUMBER:
E4

100% SUBMISSION

STANDARD BUILDING DESIGNS

V10 - VEHICLE MAINTENANCE (3 BAY) AND POL BUILDING

SHEET INDEX

G1 COVER SHEET

S1 GENERAL NOTES
S2 GENERAL NOTES
S3 GENERAL NOTES
S4 GENERAL NOTES
S5 FOUNDATION PLAN
S6 VEHICLE MAINTENANCE AND POL BUILDING ROOF FRAMING PLAN
S7 VEHICLE MAINTENANCE AND POL BUILDINNG SECTIONS AND DETAILS
S8 SECTIONS & DETAILS
S9 SECTIONS & DETAILS
S10 TYPICAL DETAILS (VEHICLE MAINTENANCE BLDG)

A1 FLOOR AND ROOF PLANS
A2 ROOF DETAILS
A3 EXTERIOR ELEVATIONS
A4 BUILDING & WALL SECTIONS
A5 DOOR, WINDOW & HARDWARE TYPES & DETAILS
A6 SECTION DETAILS
A7 MISCELLANEOUS DETAILS

P1 FLOOR PLAN - PLUMBING AND DRAINAGE ISOMETRIC

M1 HVAC FLOOR PLAN

SHEET INDEX (CONTINUED)

E0 ELECTRICAL SYMBOLS AND ABBREVIATIONS
E1 LIGHTING PLAN
E2 POWER AND SYSTEMS PLAN
E3 DETAILS
E4 LIGHT FIXTURE SCHEDULE
E5 PANEL SCHEDULES AND RISER DIAGRAM

US Army Corps of Engineers®
AFGHANISTAN ENGINEER DISTRICT

MARK	DESCRIPTION	DATE	APPR.	MARK	DESCRIPTION	DATE	APPR.

U.S. ARMY CORPS OF ENGINEERS
AFGHANISTAN DISTRICT
APO AE 09356

DESIGNED BY: DATE:
DWN BY: CKD BY: SOLICITATION NO.:
SUBMITTED BY: CONTRACT NO.:
PLOT SCALE: 1:1 PLOT DATE: $DATE$
SIZE: ANSI D FILE NAME: $FILE$ FILE NUMBER:

STANDARD DESIGN
V10 - VEHICLE MAINTENANCE - 3 BAY

COVER SHEET

SHEET IDENTIFICATION
G1
SHEET 1 OF 25

$FILE$ $DATE$ $TIME$

STRUCTURAL ABBREVIATIONS:

ACI	AMERICAN CONCRETE INSTITUTE
AISC	AMERICAN INSTITUTE OF STEEL CONSTRUCTION
ALT	ALTERNATE
ASTM	AMERICAN SOCIETY FOR TESTING AND MATERIALS
AWS	AMERICAN WELDING SOCIETY
ARCH	ARCHITECTURAL
B	BOTTOM
BLDG	BUILDING
BOTT	BOTTOM
℄	CENTER LINE
CFMF	COLD FORM METAL FRAME
CFS	COLD FORMED STEEL
CIP	CAST IN PLACE
CIPL	CAST-IN-PLACE LINTEL
CJ	CONTROL JOINT
CLG	CEILING
CLR	CLEAR
CMU	CONCRETE MASONRY UNIT
COEFF	COEFFICIENT
COL	COLUMN
CONC	CONCRETE
CONT	CONTINUOUS
COORD	COORDINATE
CSJ	CONSTRUCTION JOINT
CTJ	CONTROL JOINT
DIA	DIAMETER
DIAG	DIAGONAL
DIM	DIMENSION
DWG	DRAWING
DWL	DOWEL
EA	EACH
ELEC	ELECTRICAL
ELEV	ELEVATION
EMBED	EMBEDMENT
EQUIV	EQUIVALENT
ETC	ET CETERA
E.W.	EACH WAY
EXT	EXTERIOR
FTG	FOOTING
GA	GAUGE
HORIZ	HORIZONTAL
HRS	HOURS
IBC	INTERNATIONAL BUILDING CODE
INT	INTERIOR
Kg	KILOGRAM
KIP	KIPS (1 KIP = 1,000 POUNDS)
kN	KILONEWTON
kPa	KILOPASCAL
L#	ANGLE (# INDICATES SIZE)
LLV	LONG LEG VERTICAL
M	METER
MAX	MAXIMUM
MBM	METAL BUILDING MANUFACTURER
MBMA	METAL BUILDING MANUFACTURERS ASSOCIATION
MECH	MECHANICAL
MFG	MANUFACTURER
MID	MIDDLE
MIN	MINIMUM
MISC	MISCELLANEOUS
MM	MILLIMETER
MPa	MEGAPASCAL
MTL	METAL
MWFRS	MAIN WIND FORCE RESISTING SYSTEM
N	NEWTON
N	NORTH
N/A	NOT APPLICABLE
#	NUMBER SYMBOL FOR REBAR SIZE
NTS	NOT TO SCALE
O.C.	ON CENTER
OPNG	OPENING
ℙ or PL	PLATE
PRE-ENG	PRE-ENGINEERED
REINF	REINFORCED
REQ'D	REQUIRED
SIM	SIMILAR
SPECS	SPECIFICATIONS
STD	STANDARD
STRUCT	STRUCTURAL
T	TOP
T/	TOP OF
T/ELEV	TOP ELEVATION
T&B	TOP AND BOTTOM
THK	THICK
TM	TRADE MARK
TYP	TYPICAL
UFC	UNIFIED FACILITIES CRITERIA
UON	UNLESS OTHERWISE NOTED
VERT	VERTICAL
W	WIDTH
W/	WITH

GENERAL NOTES

1.0 THIS PROJECT HAS BEEN DESIGNED FOR THE WEIGHTS AND MATERIALS INDICATED ON THE SHEETS AND FOR THE LIVE LOADS INDICATED IN THE DESIGN CRITERIA. IT IS THE CONTRACTOR'S RESPONSIBILITY TO DETERMINE ALLOWABLE CONSTRUCTION LOADS AND TO PROVIDE PROPER DESIGN AND CONSTRUCTION OF FALSEWORK, FORMWORK, STAGING, BRACING, SHEETING AND SHORING, ETC.

1.1 COORDINATE THESE SHEETS WITH THE ARCHITECTURAL, MECHANICAL, ELECTRICAL, PLUMBING, AND CIVIL SHEETS. ALL DIMENSIONS SHOWN ON THE SHEETS ARE MILLIMETERS UNLESS NOTED OTHERWISE.

1.2 THE CONTRACTOR SHALL VERIFY AND COORDINATE ALL FLOOR AND ROOF OPENING SIZES AND LOCATIONS, EQUIPMENT PAD SIZES AND LOCATIONS, ANCHOR BOLT LAYOUTS, ETC WITH EQUIPMENT SELECTED. THE CONTRACTOR SHALL MAKE ANY REQUIRED MODIFICATIONS AT NO ADDITIONAL COST.

1.3 THE CONTRACTOR SHALL REFER TO THE ARCHITECTURAL, MECHANICAL, ELECTRICAL AND PLUMBING SHEETS FOR SLEEVES, CURBS, INSERTS OR OPENINGS, ETC. NOT HEREIN INDICATED.

1.4 SLAB OPENINGS SMALLER THAN 250mm DIA TO BE CORE DRILLED IN FIELD UON. SEE MECHANICAL, ELECTRICAL AND PLUMBING SHEETS FOR LOCATIONS OF THESE OPENINGS.

1.5 WORK NOT INCLUDED ON THE SHEETS BUT IMPLIED TO BE SIMILAR TO THAT SHOWN AT CORRESPONDING PLACES ELSEWHERE ON THE SHEETS SHALL BE REPEATED.

1.6 IN CASE OF CONFLICT BETWEEN THE NOTES, DETAILS AND SPECIFICATIONS THE MOST RIGID REQUIREMENTS SHALL GOVERN.

1.7 SEE ARCHITECTURAL SHEETS FOR LOCATIONS OF MASONRY AND DRYWALL NON-LOAD BEARING PARTITIONS. PROVIDE COMPRESSIBLE FIRESAFING AT TOP OF WALL AS REQUIRED BY ARCHITECTURAL SHEETS.

1.8 COORDINATE FINISHED FLOOR DATUM ELEVATION 0.0m WITH THE CIVIL SHEETS.

1.9 DESIGN PRE-ENGINEERED METAL BUILDINGS IN ACCORDANCE W/ MBMA LATEST EDITION PER DESIGN CRITERIA ON SHEET S2.

2.0 FOUNDATION NOTES

2.1 THE GEOTECHNICAL ANALYSIS FOR THIS PROJECT IS THE RESPONSIBILITY OF THE CONTRACTOR AWARDED THE WORK. DESIGN VALUES USED IN THE STRUCTURAL ANALYSIS OF THE BUILDINGS HEREIN INDICATED HAVE BEEN ASSUMED AND SHALL BE CONFIRMED AND VERIFIED AS PART OF THE GEOTECHNICAL INVESTIGATION. VALUES WHICH DO NOT MEET THE REQUIREMENTS INDICATED ON SHEET S2 SHALL BE IMMEDIATELY BROUGHT TO THE ATTENTION OF THE CONTRACTING OFFICER FOR CONSIDERATION AND DETERMINATION ON THE NEXT APPROPRIATE COURSE OF ACTION.

2.2 SEE THE SPECIFICATION FOR ADDITIONAL REQUIREMENTS TO THOSE OUTLINED IN THE GEOTECHNICAL INVESTIGATION FOR EXCAVATION AND PREPARATION OF THE FOUNDATION AND THE SLAB ON GRADE SUBGRADE INCLUDING COMPACTION PROCEDURES.

2.3 EXCAVATIONS FOR FOOTINGS SHALL HAVE THE SIDES AND BOTTOMS TEMPORARILY LINED WITH 0.25mm POLYETHYLENE IF PLACEMENT OF CONCRETE DOES NOT OCCUR WITHIN 24 HRS OF THE EXCAVATION OF THE FOOTING.

2.4 FOUNDATION CONDITIONS NOTED DURING CONSTRUCTION WHICH DIFFER FROM THOSE DESCRIBED IN THE GEOTECHNICAL REPORT SHALL BE REPORTED TO THE GENERAL CONTRACTOR BEFORE FURTHER CONSTRUCTION IS ATTEMPTED. SEE PROJECT SPECIFICATIONS.

2.5 NO FOOTINGS OR SLABS SHALL BE POURED INTO OR AGAINST SUBGRADE CONTAINING FREE WATER, FROST, ICE OR LOOSE MATERIAL. FROST DEPTH ASSUMED TO BE 800MM

2.6 ALL SLAB-ON-GRADE, TRENCH BOTTOMS AND OTHER ON-GRADE INTERIOR HORIZONTAL SURFACES SHALL BE PLACED OVER A 0.25mm VAPOR RETARDER OVER A 100mm #57 STONE WATER BARRIER PLACED ON SUBGRADE PROPERLY PREPARED IN ACCORDANCE WITH THE CONTRACT SPECIFICATIONS. (UON)

2.7 SEE PLUMBING, ELECTRICAL & CIVIL SHEETS FOR REQUIRED UNDERSLAB UTILITIES.

2.8 SEE ARCHITECTURAL SHEETS FOR ALL WATERPROOFING DETAILS AND MATERIALS.

2.9 IF UNDERMINING OF FOOTINGS OCCURS, FILL VOIDS WITH 15MPa CONCRETE. DO NOT ATTEMPT TO REPLACE AND RECOMPACT SOIL.

3.0 CONCRETE

3.1 CONCRETE SHALL HAVE THE UNIT WEIGHT AND THE MINIMUM COMPRESSIVE STRENGTHS (f'c) AT 28 DAYS AS SHOWN IN THE CONCRETE MATERIALS SCHEDULE ON SHEET S3. SEE SPECIFICATIONS FOR ADDITIONAL INFORMATION. ENTRAIN AIR TO PRODUCE TOTAL AIR CONTENT ACCORDING TO THE SPECIFICATIONS FOR CONCRETE EXPOSED TO FREEZING TEMPERATURES (EXTERIOR FOOTINGS, SLAB TURNDOWNS, EXTERIOR SLABS AND SLABS-ON-GRADE, EXTERIOR RETAINING WALLS, AND EXTERIOR GRADE BEAMS.)

3.2 GROUT FOR BASE PLATES SHALL BE NON-SHRINKABLE GROUT AND SHALL HAVE A MINIMUM SPECIFIED COMPRESSIVE STRENGTH AT 28 DAYS OF 35MPa, UNLESS NOTED OTHERWISE.

3.3 NO CALCIUM CHLORIDE SHALL BE USED IN ANY CONCRETE.

3.4 MIXING, TRANSPORTING AND PLACING OF CONCRETE SHALL CONFORM TO ACI 301M-05

3.5 ALL CONCRETE WORK SHALL CONFORM TO THE REQUIREMENTS OF THE AMERICAN CONCRETE INSTITUTE (ACI) 318M MANUAL (metric), "BUILDING CODE REQUIREMENTS FOR REINFORCED CONCRETE", AND REQUIREMENTS OUTLINED IN THE CONTRACT SPECIFICATIONS. WHEN THERE IS A CONFLICT BETWEEN ACI AND THE SPECIFICATIONS, THE MORE STRINGENT SHALL GOVERN.

3.6 CHAMFER ALL EXPOSED EXTERNAL CORNERS OF CONCRETE WITH 20mm x45 DEGREE CHAMFER UON.

3.7 CONCRETE REINFORCEMENT BARS SHALL CONFORM TO ASTM A615M-96a, GRADE 420 MPa. REINFORCING BARS SHALL NOT BE TACK WELDED, WELDED, HEATED OR CUT, UNLESS INDICATED ON THE CONTRACT DOCUMENTS. ALL LAP SPLICES SHALL BE CLASS "B" UON.

3.8 HORIZONTAL FOOTING AND HORIZONTAL WALL REINFORCEMENT SHALL BE CONTINUOUS AND SHALL HAVE 90 DEGREE BENDS AND EXTENSIONS, OR CORNER BARS OF EQUIVALENT SIZE LAPPED WITH A CLASS B TENSION SPLICE AT CORNERS AND INTERSECTIONS. TOP BAR CRITERIA SHALL APPLY IF 300mm OR MORE OF FRESH CONCRETE IS PLACED BELOW BAR.

3.9 SLABS-ON-GRADE SHALL HAVE CONSTRUCTION JOINTS OR CRACK CONTROL JOINTS AS SHOWN ON THE SHEETS. CONSTRUCTION JOINTS CAN BE USED AT CONTROL JOINT LOCATIONS AT CONTRACTORS OPTION. SEE SLAB PLANS & JOINT DETAILS FOR ADDITIONAL INFORMATION. FOR AREAS NOT SHOWN ON SHEETS, THE MAXIMUM SPACING OF CONSTRUCTION/ CRACK CONTROL JOINTS SHALL BE 4800mm

3.10 SEE SPECIFICATIONS FOR ALL WATERPROOFING/DAMPPROOFING REQUIREMENTS.

3.11 ALL CONCRETE REINFORCEMENT SHALL BE DETAILED, FABRICATED, LABELED, SUPPORTED, AND SPACED IN FORMS AND SECURED IN PLACE IN ACCORDANCE WITH THE PROCEDURES AND REQUIREMENTS OUTLINED IN THE LATEST EDITION OF THE "BUILDING CODE REQUIREMENTS FOR REINFORCED CONCRETE", ACI 318M, AND THE "MANUAL OF STANDARD PRACTICE FOR DETAILING REINFORCED CONCRETE STRUCTURES", ACI 315M, LATEST EDITION.

3.12 SHOP DRAWINGS SHOWING REINFORCING DETAILS, INCLUDING STEEL SIZES, SPACING AND PLACEMENT, SHALL BE SUBMITTED FOR REVIEW PRIOR TO FABRICATION.

3.13 ALL DOWELS SHALL MATCH SIZE AND NUMBER OF MAIN REINFORCING, UNLESS NOTED OTHERWISE ON SHEETS.

3.14 ADDITIONAL BARS SHALL BE PROVIDED AROUND ALL FLOOR AND WALL OPENINGS AS SHOWN ON THE SHEETS.

3.15 SEE ARCHITECTURAL SHEETS FOR TYPE AND LOCATION OF ALL FLOOR FINISHES.

3.16 THE CONTRACTOR SHALL COORDINATE ADDITIONAL WALL/SLAB OPENINGS NOT SHOWN ON STRUCTURAL SHEETS. SEE MECHANICAL, ELECTRICAL, PLUMBING AND CIVIL SHEETS.

3.17 UNLESS NOTED OTHERWISE, ALL CURBS SHALL BE REINFORCED WITH AT LEAST (1)-#13 CONTINUOUS AND #13 AT 300mm O.C. DOWELS TO STRUCTURE BELOW.

3.18 THE SUB-CONTRACTOR SHALL VERIFY ALL OPENINGS, PAD SIZES, AND ANCHOR BOLTS WITH EQUIPMENT SELECTED.

3.19 FOR ALL WALLS & PIERS, PROVIDE DOWELS INTO FOOTING AT EACH VERT REINF BAR, UON DOWEL SIZE SHALL BE SAME AS VERT REINF.

3.20 ALL DEFORMED BAR ANCHORS SHALL BE TRS NELSON DIVISION OR EQUAL 15mm DIA (UON) CONFORMING TO ASTM A-496M WITH A MINIMUM TENSILE STRENGTH OF 550 MPa. ANCHOR DIMENSIONS SHALL BE IN ACCORDANCE WITH ASTM D-19. INSTALL ANCHORS IN ACCORDANCE WITH MANUFACTURERS RECOMMENDATIONS BY AUTOMATIC END WELDING AS INDICATED ON THE DRAWINGS. NO UNAUTHORIZED OR FIELD WELDING SHALL BE MADE WITHOUT AUTHORIZATION FROM THE MANUFACTURER.

3.21 ALL REINFORCING INDICATED TO BE WELDED SHALL BE IN ACCORDANCE WITH ASTM A706M. "LOW ALLOY STEEL DEFORMED BARS FOR CONCRETE REINFORCEMENT". ANY INSTALLATIONS USING MANUFACTURER'S EQUIPMENT SHALL BE PER MANUFACTURER'S RECOMMENDATIONS.

3.22 PROVIDE CONCRETE POUR STOPS OR FORMS AS REQUIRED FOR INSTALLATION OF ALL CONCRETE WORK.

3.23 PROVIDE ADDITIONAL (2)-#13 x 600mm REINFORCING BARS IN SLAB-ON-GRADE AT ALL RE-ENTRANT CORNERS. PLACE BARS AT MID-DEPTH OF SLAB WITH A CLEARANCE OF 50mm FROM CORNER UON.

4.0 CONCRETE MASONRY

4.1 MASONRY CONSTRUCTION AND MATERIALS SHALL CONFORM TO ALL REQUIREMENTS OF THESE CONTRACT DOCUMENTS AND THE PROJECT SPECIFICATIONS.

4.2 THE SPECIFIED ULTIMATE COMPRESSIVE STRENGTH OF CONCRETE MASONRY (f'm) ON THE NET AREA IS A MINIMUM OF 10.4 MPa.

4.3 PROVIDE TWO #16 BARS CONTINUOUS IN ALL CMU AND CAST-IN-PLACE BOND BEAMS UON ON THE SHEETS. INTERMEDIATE BOND BEAMS SHALL BE CONTINUOUS AND SPACED AT A MAXIMUM OF 1200mm OC VERTICALLY. ALL BOND BEAMS SHALL BE A MINIMUM OF 200mm IN DEPTH WITH REINFORCING BEING CONTINUOUS AND HAVING STANDARD ACI HOOKS AT EACH END. PROVIDE STANDARD BAR SPLICES AS SPECIFIED.

4.4 FOR MINIMUM WALL REINFORCING, SEE MIN CMU WALL REINFORCING DETAILS ON SHEET S10.

4.5 CMU CELLS THAT REQUIRE VERTICAL REINFORCING BARS AS INDICATED ON THE CONTRACT DRAWINGS AND/OR SPECS SHALL HAVE REINF BAR PLACED IN CENTERS OF CMU CELLS AND CONTINUOUSLY GROUTED UON.

4.6 PROVIDE LADDER TYPE JOINT REINFORCEMENT AT 200mm FOR EXTERIOR & 400mm FOR INTERIOR ON CENTER MAXIMUM, UON MINIMUM ROD SIZE USED SHALL BE 9 GA. DEFORMED WIRE AND CONFORM TO ASTM A82M, UON.

4.7 PROVIDE CONTROL JOINTS AS INDICATED ON THE ARCHITECTURAL SHEETS.

4.8 GROUT FOR MASONRY SHALL BE NORMAL WEIGHT AND HAVE A MINIMUM COMPRESSIVE STRENGTH OF 25 MPa AT 28 DAYS. GROUT SHALL CONFORM TO ASTM C476M. GROUT LIFTS SHALL NOT EXCEED 1400mm.

4.9 USE MORTAR TYPE S CONFORMING TO ASTM C270M, SEE SPECIFICATIONS.

4.10 CONCRETE MASONRY UNITS SHALL BE NORMAL WEIGHT AND CONFORM TO ASTM C90M.

4.11 ALL CMU CELLS, OPEN CAVITIES, AND AIR SPACES SHALL BE GROUTED. TO STOP FRAGMENTS FROM MORTAR BLAST

4.12 BOND BEAM REINFORCING SHALL BE DISCONTINUOUS AT CONTROL JOINTS (UON). MAXIMUM CONTROL JOINT SPACING SHALL BE AS INDICATED ON THE ARCHITECTURAL SHEETS.

4.13 CONTRACTOR SHALL COORDINATE LOCATION OF ALL OPENINGS SEE ARCH, MECH, ELEC, AND PLUMBING SHEETS. FOR SIZE AND LOCATION OF OPENINGS.

4.14 MASONRY WALLS SHALL NOT BE BACK FILLED PRIOR TO THE MORTAR AND GROUT ATTAINING THEIR RESPECTIVE MAXIMUM DESIGN STRENGTHS PER SPECIFICATIONS.

5.0 STEEL DECK

5.1 STEEL DECK SHALL BE ASTM A611M, GRADES C & D OR A653M STRUCTURAL QUALITY HAVING A MINIMUM YIELD STRENGTH OF 345 MPa AS PER THE STEEL DECK INSTITUTE (SDI) DESIGN MANUAL.

5.2 STEEL DECK SHALL BE ERECTED IN ACCORDANCE WITH THE MANUFACTURER'S SPECIFICATIONS AND ERECTION LAYOUTS AND CONNECTED TO SUPPORTING MEMBERS AS INDICATED.

5.3 COMPOSITE FLOOR DECK

5.3.1 STEEL FLOOR DECK SHALL BE 51mm RIB HEIGHT, 18 GA HOT-DIP GALVANIZED (SDI TYPE 2VLI-18) UON.

5.3.2 FLOOR DECK SHALL HAVE THE FOLLOWING MINIMUM PROPERTIES:

	18 GAUGE
MOMENT OF INERTIA, Ip	760mm4/mm WIDTH
SECTION MODULUS (TOP OF DECK), Sn	27.5mm3/mm WIDTH
SECTION MODULUS (BOTT OF DECK) Sp	27.8mm3/mm WIDTH

5.3.3 FLOOR DECK SHALL BE FASTENED TO THE SUPPORTS AS INDICATED IN THE BOTTOM OF THE FLUTES USING A SDI 36/7 PATTERN. DECK SIDELAPS SHALL BE ATTACHED USING #10 SELF-TAPPING TEK SCREWS WITH A MINIMUM 3-SIDE LAP CONNECTIONS PER SPAN.

5.3.4 SUSPENDED CEILINGS, LIGHT FIXTURES, DUCTS, CONDUITS, PIPING OR OTHER UTILITIES SHALL NOT BE SUPPORTED BY THE STEEL FLOOR DECK.

5.3.5 IN ADDITION TO MEETING THE MINIMUM REQUIREMENTS ABOVE, THE DECK MANUFACTURER SHALL DESIGN THE FLOOR DECK AND ATTACHMENTS TO STEEL FOR A MAXIMUM DEFLECTION DUE TO WET CONCRETE & 1 KPa CONSTANT LOAD OF L/240. FLOOR DECK SHALL NOT REQUIRE SHORING DURING CONCRETE PLACEMENT.

6.0 STRUCTURAL STEEL

6.1 STRUCTURAL STEEL ROLLED SHAPES AND PLATES SHALL CONFORM TO THE MATERIAL INFORMATION SCHEDULE. DIMENSIONS AND PROPERTIES SHALL BE IN ACCORDANCE TO ASTM A36M.

6.2 ANCHOR BOLTS SHALL CONFORM TO ASTM A36M HEAVY HEX UNLESS NOTED OTHERWISE.

6.3 CONNECTION BOLTS FOR STRUCTURAL STEEL MEMBERS SHALL BE 20 DIA ASTM A325M-N, UON; NUTS SHALL CONFORM TO ASTM A563M; WASHERS SHALL CONFORM TO ASTM F436M. CONNECTION BOLTS SHALL HAVE A HARDENED WASHER PLACED UNDER THE ELEMENT TO BE TIGHTENED.

6.4 DETAILING OF STRUCTURAL STEEL CONNECTIONS MUST BE CONSISTENT WITH RECOGNIZED, PUBLISHED METHODS SUCH AS IN THE AISC "STEEL CONSTRUCTION MANUAL", THIRTEENTH EDITION; "ENGINEERING FOR STEEL CONSTRUCTION", OR "VOLUME II CONNECTIONS MANUAL OF STEEL CONSTRUCTION".

6.4.1 THE CODE OF STANDARD PRACTICE OF AISC THIRTEENTH EDITION IS AMENDED SUCH THAT THE FABRICATOR/DETAILER IS RESPONSIBLE FOR THE DESIGN AND DETAILING OF ALL CONNECTIONS.

6.5 STANDARD FRAMING CONNECTIONS SHALL BE DETAILED BY THE FABRICATOR IN ACCORDANCE WITH THE AISC "STEEL CONSTRUCTION MANUAL", THIRTEENTH EDITION. CONNECTIONS SHALL BE DESIGNED TO DEVELOP A MINIMUM END REACTION OF 54kN.

6.5.1 UNLESS NOTED OTHERWISE AS THUS: (##kN), CONNECTIONS SHALL BE DESIGNED AND DETAILED FOR THE END REACTION DETERMINED FROM PART 2 – "ALLOWABLE UNIFORM LOAD TABLES" FROM THE AISC STEEL CONSTRUCTION MANUAL 13TH EDITION OR A MINIMUM OF 54 kN WHICH EVER IS GREATER.

6.6 ALL MEMBERS AND CONNECTIONS ON THE CONTRACT DRAWINGS AND CONNECTIONS NOT SHOWN SHALL BE DESIGNED AND SEALED BY A LICENSED PROFESSIONAL ENGINEER, DETAILED AND SUBMITTED FOR APPROVAL AND SHOWN ON THE SHOP DRAWINGS.

6.7 ALTERNATIVE CONNECTION DETAILS MAY BE SUBMITTED ON SHOP DRAWINGS BY THE CONTRACTOR ONLY IF ACCOMPANIED BY COMPLETE STRUCTURAL CALCULATIONS PREPARED AND SEALED BY A LICENSED PROFESSIONAL ENGINEER AND SUBMITTED FOR REVIEW.

6.8 CALCULATIONS FOR DETAILS MUST SHOW A RATIONAL ANALYSIS OF A COMPLETE LOAD PATH, INCLUDING LOCAL EFFECTS ON WEBS, FLANGES, ETC OF THE CONNECTED MEMBERS AND THE DEVICES (PLATES, SEATS, BRACKETS, BOLTS, WEBS, ETC) AFFECTING ALL CONNECTIONS. FAILURE TO SUBMIT SUCH CALCULATIONS FOR REVIEW CONCURRENT WITH SHOP DRAWING ERECTION PLANS AND DETAILS WILL BE CAUSE FOR REJECTION OF THAT SUBMITTAL.

6.8.1 ALL SHEAR TAB CONNECTIONS SUBMITTED AS AN ALTERNATE FOR APPROVAL SHALL BE DESIGNED USING A FLEXIBLE SUPPORT CONDITION.

6.8.2 BEAM AND GIRDER CONNECTIONS SHALL BE DESIGNED SUCH THAT ALL ADDITIONAL STRESSES DUE TO CONNECTION ECCENTRICITY SHALL BE DEVELOPED BY THE CONNECTION AND NOT INDUCE ANY ADDITIONAL STRESSES INTO SUPPORTING MEMBERS.

6.9 STRUCTURAL STEEL DETAILING, FABRICATION AND ERECTION SHALL CONFORM TO THE AISC "SPECIFICATION FOR STRUCTURAL STEEL BUILDINGS – ALLOWABLE STRESS DESIGN AND PLASTIC DESIGN" AND THE AISC "CODE OF STANDARD PRACTICE FOR STEEL BUILDINGS AND BRIDGES" – LATEST EDITIONS.

6.10 WELDING SHALL CONFORM TO THE AMERICAN WELDING SOCIETY STRUCTURAL WELDING CODE AWS D1.1. ELECTRODES FOR SHOP AND FIELD WELDS SHALL BE CLASS E70XX. ALL WELDING SHALL BE DONE BY QUALIFIED, CERTIFIED WELDERS PER THE ABOVE STANDARD.

6.11 SHOP AND FIELD TESTING OF WELDS AND BOLTS SHALL BE AS OUTLINED IN THE SPECIFICATIONS.

6.12 ALL FILLET WELDS SHALL BE A MINIMUM OF 5mm UNLESS NOTED OTHERWISE

6.13 THERE SHALL BE NO FIELD CUTTING OF STRUCTURAL STEEL MEMBERS FOR THE WORK OF OTHER TRADES WITHOUT PRIOR APPROVAL OF THE CONTRACTING OFFICER.

6.14 FOR FLOOR AND ROOF OPENINGS, THE FABRICATOR SHALL VERIFY OPENING LOCATIONS WITH EQUIPMENT SELECTED AND MAKE ANY NECESSARY MODIFICATIONS AT NO ADDITIONAL COST. THE CONTRACTOR SHALL COORDINATE MECHANICAL UNITS AND OPENINGS & ARCHITECTURAL ITEMS REQUIRED FOR COMPLETE INSTALLATION OF WORK. IT IS THE RESPONSIBILITY OF FABRICATOR TO RECEIVE ALL NECESSARY INFORMATION PRIOR TO FABRICATION OF THE STEEL.

6.15 ALL STRUCTURAL STEEL SHALL BE PRIMED AS PER THE SPECIFICATIONS.

6.16 ALL PLATES NOT INDICATED SHALL BE 13mm MIN THICKNESS. ALL ANGLES NOT INDICATED SHALL BE 76x76x7.9 MIN. ALL WELDS NOT INDICATED SHALL BE 6mm MIN ALL AROUND UON.

6.17 SEE MECHANICAL, ELECTRICAL, AND PLUMBING SHEETS FOR ADDITIONAL OPENINGS NOT SHOWN. ALL OPENINGS SHALL BE FRAMED 4 SIDES WITH C200x17'S UON.

US Army Corps of Engineers®
AFGHANISTAN ENGINEER DISTRICT

MARK	DESCRIPTION	DATE	APPR.	MARK	DESCRIPTION	DATE	APPR.

U.S. ARMY CORPS OF ENGINEERS
AFGHANISTAN DISTRICT
APO AE 09356

DESIGNED BY: | DATE:
DWN BY: | CKD BY: | SOLICITATION NO.:
SUBMITTED BY: | CONTRACT NO.:
PLOT SCALE: 1:1 | PLOT DATE: 11/22/2011 | FILE NUMBER:
SIZE: ANSI D | FILE NAME: VM10_S-001.dgn

STANDARD DESIGN
V10 - VEHICLE MAINTENANCE - 3 BAY

GENERAL NOTES

SHEET IDENTIFICATION
S1
SHEET 2 OF 26

P:\VM10_Vehicle Maintenance-3_Bay\VM10_S-001.dgn
11/23/2011 9:42:01 AM

STRUCTURAL DESIGN CRITERIA

ALL DESIGNS SHALL CONFORM TO THE PROVISIONS OF THE IBC 2006 AS APPLICABLE

1.0 DESIGN LOADS

1.1 DEAD LOADS

1.1.1 ROOF DEAD LOADS – PRE-ENGINEERED FRAMING

	MAXIMUM GRAVITY LOAD	MINIMUM GRAVITY LOAD
STEEL FRAMING	0.20 KPa	0.15 KPa
METAL DECKING/ROOFING	0.14 KPa	0.05 KPa
MECH/ELEC/PLUMBING	0.15 KPa	0.10 KPa
METAL PANEL CEILING	0.15 KPa	0.15 KPa
MISC	0.40 KPa	0.00 KPa
	1.00 KPa	0.45 KPa

1.2 LIVE LOADS (PER IBC 2006)

1.2.1 ELEVATED SLAB

STORAGE AREA 4.80 KPa

1.2.2 ROOF LIVE LOADS: ALL BUILDINGS

GREATER OF 1.0 KPa MINIMUM OR SNOW LOAD

1.2.3 SLAB-ON-GRADE LIVE LOADS

ALL BUILDINGS 4.80 KPa

1.3 SNOW LOADS (PER IBC 2006)

1.3.1 DESIGN PARAMETERS

GROUND SNOW LOAD (per UFC 3-310-01)	1.0 KPa
SNOW IMPORTANCE FACTOR	1.0
SNOW EXPOSURE FACTOR	1.0

1.4 SEISMIC LOADS (PER IBC 2006 & UFC 3-310-04)

1.4.1 SEISMIC PARAMETERS – PRE-ENGINEERED BUILDINGS

SEISMIC OCCUPANCY CATEGORY	II
SEISMIC IMPORTANCE FACTOR (I)	1.0
SEISMIC SITE CLASS	D
Ss	1.280
S1	0.510
Sds	0.853
Sd1	0.510
SEISMIC DESIGN CATEGORY	D
SEISMIC RESISTING SYSTEM	MOMENT RESISTING FRAME INTERMEDIATE STEEL MOMENT FRAMES
RESPONSE MODIFICATION FACTOR (R)	4.5
RESPONSE COEFFICIENT (Cs)	EQUIV LATERAL FORCE
SEISMIC ANALYTICAL PROCEDURE	111.2kn
SEISMIC BASE SHEAR	0.133

1.5 WIND LOADS (PER IBC 2006)

1.5.1 DESIGN PARAMETERS

BASIC WIND SPEED	137 Km/h
WIND IMPORTANCE FACTOR	1.0
WIND EXPOSURE CATEGORY	D
DIRECTIONALITY COEFFICIENT (Kd)	0.85
TOPOGRAPHIC FACTOR (Kzt)	1.0

1.5.2 DESIGN WIND PRESSURE – MAIN WINDFORCE RESISTING SYSTEM

LOCATION	CORNER ZONE WIDTH "a"	MEAN ROOF HEIGHT (h)	WINDWARD WALL (@ MEAN ROOF HEIGHT)	LEEWARD WALL (@ MEAN ROOF HEIGHT)	ROOF
FIELD ZONE	N/A	6544mm	600 N/m^2	−570 N/m^2	−780 N/m^2
CORNER ZONE	1440mm	6544mm	830 N/m^2	−680 N/m^2	−1130 N/m^2

a = 10% OF LEAST HORIZONTAL DIMENSION OR 0.4h, WHICHEVER IS SMALLER, BUT NOT LESS THAN EITHER 4% OF LEAST HORIZONTAL DIMENSION OR 0.9M.
h = MEAN ROOF HIEGHT, IN METERS, EXCEPT THAT EAVE HIEGHT SHALL BE USED FOR ANGLE GREATER THAN 10°.

1.5.3 DESIGN WIND PRESSURE – WALL COMPONENTS AND CLADDING

EXTERIOR WALL SYSTEMS & THEIR ATTACHMENTS TO THE PRIMARY STRUCTURE SHALL BE DESIGNED FOR THE PRESSURES SHOWN IN THE DIAGRAM BELOW:

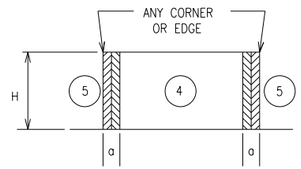

LOCATION	WINDWARD PRESSURE N/m^2 (inward)		LEEWARD PRESSURE N/m^2 (outward)		a
	4	5	4	5	
MAIN BUILDING					(mm)
AREA = 1 m^2	1050	1050	−1140	−1410	1440
AREA = 2 m^2	1010	1010	−1100	−1310	1440
AREA = 5 m^2	910	910	−1000	−1120	1440
AREA = 10 m^2	820	820	−910	−930	1440

NOTES:
1. DESIGN WIND PRESSURES ABOVE REPRESENT THE NET PRESSURE (SUM OF INTERNAL AND EXTERNAL PRESSURE) APPLIED NORMAL TO ALL SURFACES.
2. LINEAR INTERPOLATION BETWEEN VALUES OF TRIBUTARY AREA IS PERMISSIBLE.
3. PLUS AND MINUS SIGNS SIGNIFY PRESSURE TOWARD AND AWAY FROM THE EXTERIOR SURFACE, RESPECTIVELY.

1.5 WIND LOADS (CONT)

1.5.4 DESIGN WIND PRESSURE – ROOF COMPONENTS AND CLADDING

ROOF COMPONENTS & THEIR ATTACHMENTS SHALL BE DESIGNED FOR THE PRESSURES SHOWN IN THE ADJACENT DIAGRAM & TABLE BELOW:

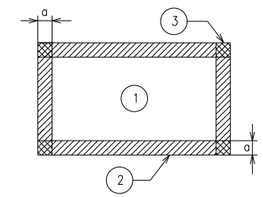

ROOF MEAN HEIGHT

LOCATION	GROSS UPLIFT PRESSURE N/m^2 (upward)			a
	1	2	3	
MAIN BUILDING				(mm)
AREA = 1 m^2	−970	−1670	−2480	1440
AREA = 2 m^2	−950	−1540	−2320	1440
AREA = 5 m^2	−880	−1260	−1990	1440
AREA = 10 m^2	−880	−1240	−1960	1440

NOTES:
1. DESIGN WIND PRESSURES ABOVE REPRESENT THE NET PRESSURE (SUM OF INTERNAL AND EXTERNAL PRESSURE) APPLIED NORMAL TO ALL SURFACES.
2. LINEAR INTERPOLATION BETWEEN VALUES OF TRIBUTARY AREA IS PERMISSIBLE.
3. PLUS AND MINUS SIGNS SIGNIFY PRESSURE TOWARD AND AWAY FROM THE EXTERIOR SURFACE, RESPECTIVELY.

2.0 FOUNDATION DESIGN CRITERIA (TO BE CONFIRMED BY THE CONTRACTOR)

THE GEOTECHNICAL ANALYSIS FOR THIS PROJECT IS THE RESPONSIBILITY OF THE CONTRACTOR AWARDED THE WORK. DESIGN VALUES USED IN THE STRUCTURAL ANALYSIS OF THE BUILDINGS HEREIN INDICATED HAVE BEEN ASSUMED AND SHALL BE CONFIRMED AND VERIFIED AS PART OF THE GEOTECHNICAL INVESTIGATION. VALUES WHICH DO NOT MEET THE REQUIREMENTS INDICATED BELOW SHALL BE IMMEDIATELY BROUGHT TO THE ATTENTION OF THE CONTRACTING OFFICER FOR CONSIDERATION AND DETERMINATION ON THE NEXT APPROPRIATE COURSE OF ACTION.

2.1.1 SOIL DESIGN PARAMETERS

NET ALLOWABLE SOIL BEARING CAPACITY	96.0 KPa
UNIT WEIGHT OF SOIL (moist)	1800 Kg/m^3
COEFF ACTIVE EARTH PRESSURE (Kpa)	0.30
COEFF PASSIVE EARTH PRESSURE (Kpp)	3.33
COEFF AT-REST EARTH PRESSURE (Kpr)	.55
COEFF OF SOIL FRICTION	.35
SUBGRADE MODULUS	4120 g/m^3
MINIMUM BEARING DEPTH BELOW GRADE	800mm
SEISMIC SITE CLASS (based on in-situ soil)	D

US Army Corps of Engineers®
AFGHANISTAN ENGINEER DISTRICT

MARK	DESCRIPTION	DATE	APPR.	MARK	DESCRIPTION	DATE	APPR.

U.S. ARMY CORPS OF ENGINEERS
AFGHANISTAN DISTRICT
APO AE 09356

DESIGNED BY: DWN BY: CKD BY: SUBMITTED BY: DATE: SOLICITATION NO.: CONTRACT NO.: FILE NUMBER:
PLOT SCALE: 1:1 PLOT DATE: 11/23/2011 SIZE: ANSI D FILE NAME: VM10_S-002.dgn

STANDARD DESIGN
V10 - VEHICLE MAINTENANCE - 3 BAY

GENERAL NOTES

SHEET IDENTIFICATION
S2
SHEET 3 OF 26

P:\VM10_Vehicle Maintenance-3_Bay\VM10_S-002.dgn
11/23/2011 10:14:28 AM

MINIMUM LAP SPLICES OF REINFORCING BARS IN TENSION (PER ACI 318M-05)

f'c = 28 MPa CONCRETE

BAR SIZE \ CENTER TO CENTER BAR SPACING	(---TOP BARS--) LESS THAN 4db	(---TOP BARS--) 4db OR MORE	(--OTHER BARS--) LESS THAN 4db	(--OTHER BARS--) 4db OR MORE	4db
#10	460	460	410	410	40
#13	660	610	510	480	50
#16	1020	760	790	580	60
#19	1450	910	1120	710	80
#22	1960	1090	1500	840	90
#25	2590	1450	1980	1120	100
#29	3280	1830	2510	1420	110
#32	4140	2340	3200	1780	130
#36	5080	2840	3910	2180	140

NOTES:

1. LAP SPLICES ABOVE ARE IN MILLIMETERS UON.
2. YIELD STRENGTH OF REINFORCEMENT, fy, IS 400MPa (LAP SPLICE LENGTH IS IN MILLIMETERS).
3. CONCRETE IS NORMAL WEIGHT (2400Kg/m^3).
4. TOP BAR INDICATES HORIZONTAL REINFORCEMENT WHICH IS PLACED ABOVE 300mm OR MORE OF FRESH CONCRETE.
5. SEE COLUMN SCHEDULE FOR COLUMN AND SHEAR WALL VERTICAL LAP SPLICE.
6. STRAIGHT DEVELOPMENT LENGTH OF AN UNLAPPED BAR IS EQUAL TO VALUE FROM TABLE DIVIDED BY 1.3.
7. CATEGORY FOR BARS SPACED LESS THAN 4d, OR ON CENTER CORRESPONDS TO CATEGORY 1 IN THE CRSI HANDBOOK WHEREAS FOR BARS SPACED 4d, OR MORE ON CENTER CORRESPOND TO CRSI CATEGORY 5.

STEEL MATERIALS SCHEDULE

STRUCTURAL ELEMENT	FY YIELD STRENGTH (MPa)	REMARKS
BEAMS & GIRDERS	250	ASTM A36M ASTM A6M
COLUMNS	240	ASTM A53-95 GRADE B ASTM A6M
MISC BRACING	250	ASTM A572M ASTM A6M
CONNECTIONS, PLATES, & ALL OTHERS	250	ASTM A36M ASTM A6M
ANCHOR BOLTS	-	ASTM A36M or A307M ASTM A6M
PIPES	240	ASTM A53-95 GRADE B ASTM A6M
TUBING	345	ASTM A500-93 GRADE C ASTM A6M
HIGH STRENGTH BOLTS	-	ASTM A325M-N
WELDING ELECTRODES	-	AWS D1.1-90 E70xx

CONCRETE COVER SCHEDULE

MINIMUM CONCRETE COVER PROTECTION FOR REINFORCEMENT BARS SHALL BE AS FOLLOWS: (SEE ACI 318M-05, SECTION 7.7 FOR CONDITIONS NOT NOTED). DIMENSIONS FOR BAR PLACEMENT GIVEN IN SECTIONS AND DETAILS SHALL SUPERSEDE MINIMUM COVER REQUIREMENTS GIVEN HERE. DIMENSIONS ARE IN mm.

FOOTINGS (EARTH FORMED)		70
COLUMNS / PIERS (TO TIES)		40
GRADE BEAMS OR SLAB TURNED DOWN EDGES:		
TOP		40
BOTTOM (EARTH FORMED)		70
SIDES (EARTH FORMED)		70
SIDES (BOARD FORMED)	#16 BAR & SMALLER	40
	#19 THRU #36 BAR	50
ELEVATED BEAMS & SLABS:		
BEAM TIES & STIRRUPS (NOT EXPOSED TO WEATHER)		40
BEAM TIES & STIRRUPS (EXPOSED TO WEATHER)		50
FLOOR SLABS (NOT EXPOSED TO WEATHER)		20
FLOOR SLABS (EXPOSED TO WEATHER)		
#19 & LARGER		50
#13 & SMALLER		40
ROOF SLAB BARS		25
SLABS-ON-GRADE (NO EXPOSURE TO WEATHER) FROM TOP		20
SLABS-ON-GRADE (EXPOSURE TO WEATHER) FROM TOP		40
UTILITY TUNNEL WALLS, RETAINING WALLS AND SHEAR WALLS, (NO SURFACES SHALL BE EARTH FORMED) EARTH SIDE AND FRONT SIDE (EXPOSED TO WEATHER):		
#16 BAR AND SMALLER		40
#19 THRU #36 BAR		50

PROVIDE STANDARD BAR CHAIRS AND SPACERS AS REQUIRED TO MAINTAIN CONCRETE PROTECTION SPECIFIED.

CONCRETE MATERIALS SCHEDULE

STRUCTURAL ELEMENT	f'c CONCRETE COMPRESSIVE STRENGTH @ 28 DAYS (MPa)
SLAB-ON-GRADE/TURN-DOWN SLABS	28
ROOF AND FLOOR SLABS	28
ALL FOOTINGS (UON)	28
MISC. CURBS, WALLS AND PADS UON	28
CAST-IN-PLACE LINTEL	28
CONCRETE FRAMING - BEAMS AND COLUMNS	28

NOTES:
1. ALL CONCRETE SHALL BE NORMAL WEIGHT CONCRETE (2400 Kg/m^3 UON)
2. ALL CONCRETE SHALL HAVE A MAX WATER-CEMENT RATIO OF 0.45.

STANDARD HOOKS IN TENSION PER (ACI 318M-05)

HOOK DEVELOPMENT LENGTH Ldh (mm)

BAR SIZE	f'c 28 MPa
#10	180
#13	250
#16	300
#19	380
#22	430
#25	480
#29	560
#32	610
#36	690

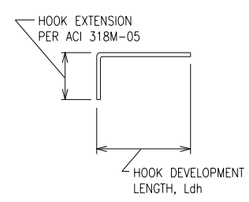

NOTES:
1. CONCRETE IS NORMAL WEIGHT CONCRETE.
2. BAR YIELD STRENGTH, fy = 420 MPa
3. SIDE COVER REQUIREMENTS OF ACI SECT. 12.5.3 ARE ASSUMED TO NOT BE MET.
4. TIE OR STIRRUP REQUIREMENTS OF ACI SECT. 12.5.3 ARE ASSUMED TO NOT BE MET.
5. REDUCTION FOR EXCESS REINFORCEMENT IS NOT TAKEN.
6. HOOK DEVELOPMENT LENGTH IS VALID FOR 180° HOOKS ALSO.

SPREAD FOOTING AND PIER SCHEDULE

MARK	FOOTING SIZE LENGTH	FOOTING SIZE WIDTH	FOOTING SIZE THICKNESS	FOOTING REINFORCING	PIER SIZE	PIER T/PIER	PIER VERT. BARS	PIER TIES	REMARKS
F1	2500	2500	300	(7)-#16 EW T&B	900	-150	(8)-#19	2 SETS #13 @ 125	HAIRPINS REQ'D. SEE DETAILS
F2	1800	1800	300	(5)-#16 EW T&B	900	-150	(8)-#19	#13 @ 250 TOP 2 @ 75	----

NOTES:
1. DIMENSIONS NOTED ARE MILLIMETERS (mm) UON
2. T/PIER ELEV GIVEN IN REFERENCE TO 0.0 mm DATUM OR FINISH FLOOR ELEV/SLAB ELEV, DISTANCE ABOVE OR BELOW INDICATED AS NEGATIVE OR POSITIVE.
3. PIER SIZE INDICATED IS SQUARE (DIMENSION SAME IN BOTH DIRECTIONS) UON

US Army Corps of Engineers®
AFGHANISTAN ENGINEER DISTRICT

MARK	DESCRIPTION	DATE	APPR.	MARK	DESCRIPTION	DATE	APPR.

DESIGNED BY: | DWN BY: | CKD BY: | SUBMITTED BY: | DATE: | SOLICITATION NO.: | CONTRACT NO.: | PLOT SCALE: 1:1 | PLOT DATE: 11/20/2011 | FILE NUMBER: | SIZE: ANSI D | FILE NAME: VM10_S-003.dgn

U.S. ARMY CORPS OF ENGINEERS
AFGHANISTAN DISTRICT
APO AE 09356

STANDARD DESIGN
V10 - VEHICLE MAINTENANCE - 3 BAY

GENERAL NOTES

SHEET IDENTIFICATION
S3
SHEET 4 OF 26

P:\VM10_Vehicle Maintenance-3_Bay\VM10_S-003.dgn
11/23/2011 10:18:24 AM

CMU LINTEL SCHEDULE

OPENING TYPE OR SIZE, BEAM LOCATION OR TYPE	MAX SPAN (mm)	BEAM DEPTH (mm)	MAIN REINFORCING			SHEAR REINF STIRRUPS
			TOP	BOTTOM	OTHER	
EXT WALL OPENING, 1-STORY BLDG	1800	400	(2)-#13	(2)-#13		----
EXT WALL OPENING, 1-STORY BLDG	900	200		(2)-#13		----
INT WALL OPENING, NON-BEARING	2400	400		(2)-#13		----
INT WALL OPENING, NON-BEARING	1800	200		(2)-#13		----
INT WALL OPENING, NON-BEARING	900	200		(2)-#13		----
INT WALL OPENING, SHEAR WALL	900	200		(2)-#13		----
INT WALL OPENING, SHEAR WALL	1800	200	(2)-#13	(2)-#13		----
INT WALL OPENING, SHEAR WALL	2400	400	(2)-#16	(2)-#16		#13 @ 300

1. STRUCTURAL SHEETS DO NOT INDICATE ALL OPENINGS IN MASONRY WALLS. VERIFY NUMBER, SIZE AND LOCATION OF ALL OPENINGS IN MASONRY WALLS FROM ARCHITECTURAL SHEETS AND APPROVED PLUMBING, MECHANICAL, AND ELECTRICAL SHOP DRAWINGS.
2. PROVIDE 200mm BEARING EA END FOR 200mm DEEP CMU LINTEL BB PROVIDE 400mm BEARING EA END FOR 400mm DEEP CMU LINTEL BB.
3. FOR HEAD DETAILS REFER TO ARCHITECTURAL SHEETS.
4. REINFORCING SHALL BE ASTM A615M, GRADE 420. CONCRETE FOR CAST-IN-PLACE BEAMS SHALL HAVE A MINIMUM COMPRESSIVE STRENGTH OF 28 MPa AT 28 DAYS.
5. CONTRACTOR SHALL SUBMIT FOR APPROVAL SHOP DRAWINGS AND SCHEDULES SHOWING SIZE, DETAILS, LOCATIONS, ETC FOR ALL CAST-IN-PLACE BEAMS IN CMU WALLS.

MAXIMUM CMU WALL UNSUPPORTED HEIGHT OR LENGTH

	WALL THICKNESS (mm)	EXTERIOR WALL NON-LOAD BEARING (mm)	INTERIOR NON-LOAD BEARING WALL (mm)
MAX HEIGHT OR LENGTH BETWEEN SUPPORTS	200	4800	7200

NOTE: CMU WALL MAXIMUM LATERAL SUPPORT SPACING GIVEN IN SECTIONS AND DETAILS SHALL SUPERSEDE THE ABOVE SCHEDULE REQUIREMENTS.

MASONRY REINFORCING MINIMUM LAP SPLICES

BAR SIZE	BASIC LAP SPLICE Ld FOR CMU REINFORCING
#10	450
#13	600
#16	750
#19	900
#22	1050
#25	1200

TYPICAL CMU WALL REINFORCING SCHEDULE

WALL TYPE OR LOCATION	WALL THICKNESS (mm)	CONT VERT REINF (CENTERED IN CMU, UON)	CONT CAST IN PLACE BOND BEAM			REMARKS
			DEPTH (mm)	REINF (BOTT UON)	MAX BOND BEAM VERT SPACING(mm)	
ALL PERIMETER/EXTERIOR WALLS (UON)	200	1-#16 @ 800	200	2-#16	1200	-----
NON-LOAD BEARING INTERIOR WALLS WITH TOP AND BOTT SUPPORTS	200	1-#13 @ 1200	200	2-#16	1200	-----

NOTES:
1. REINFORCING SIZES AND SPACING GIVEN IN SECTIONS AND DETAILS SHALL SUPERSEDE THE ABOVE SCHEDULE REQUIREMENTS.
2. PROVIDE CONTINUOUS CAST IN PLACE CONCRETE BOND BEAM AT ALL WALL LATERAL SUPPORT LOCATIONS.
3. REINFORCING INDICATED SHALL BE CONTINUOUS FOR FULL EXTENT OF SPLICE FOLLOWING THE REQUIREMENTS OF THE LAP SPLICE TABLE SHOWN ON THIS SHEET.
4. WALLS HAVE BEEN DESIGNATED AS VERTICALLY SPANNING UON AND THEREFORE MUST BE TEMPORARILY SUPPORTED DURING CONSTRUCTION UNTIL THE SUPPORTING DIAPHRAGMS (FLOOR AND ROOF SYSTEMS) HAVE BEEN COMPLETELY INSTALLED. SHORING IS THE RESPONSIBILITY OF THE CONTRACTOR.
5. ALL CMU WALLS SHALL BE FULLY GROUTED IN LIFTS NOT EXCEEDING THOSE BY CODE (UON)
6. SEE TYPICAL CMU WALL DETAILS ON SHEET S10.

US Army Corps of Engineers®
AFGHANISTAN ENGINEER DISTRICT

MARK	DESCRIPTION	DATE	APPR.	MARK	DESCRIPTION	DATE	APPR.

DESIGNED BY: DATE:
DWN BY: CKD BY: SOLICITATION NO.:
SUBMITTED BY: CONTRACT NO.:
PLOT SCALE: 1:1 PLOT DATE: 11/22/2011 FILE NUMBER:
SIZE: ANSI D FILE NAME: VM10_S-004.dgn

U.S. ARMY CORPS OF ENGINEERS
AFGHANISTAN DISTRICT
APO AE 09356

STANDARD DESIGN
V10 - VEHICLE MAINTENANCE - 3 BAY

GENERAL NOTES

SHEET IDENTIFICATION
S4
SHEET 5 OF 26

P:\VM10_Vehicle Maintenance-3_Bay\VM10_S-004.dgn
11/23/2011 10:22:04 AM

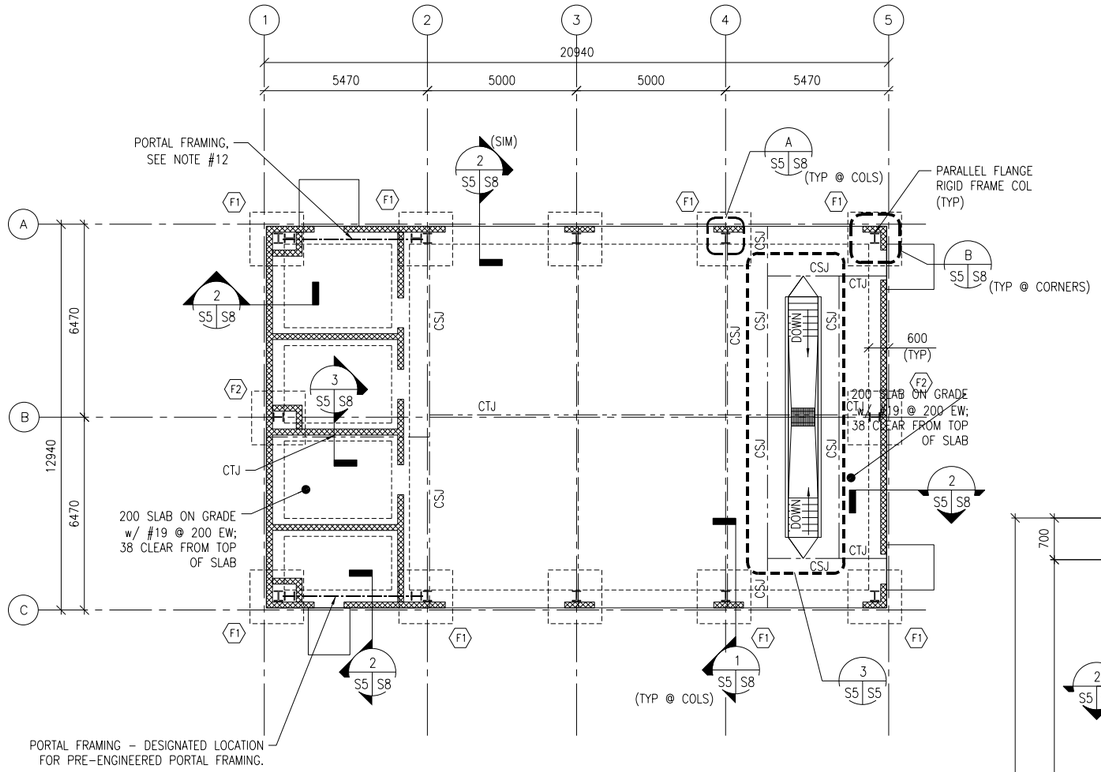

VEHICLE MAINTENANCE FOUNDATION/ SLAB PLAN

1 S5 S5 SCALE: 1:100

N

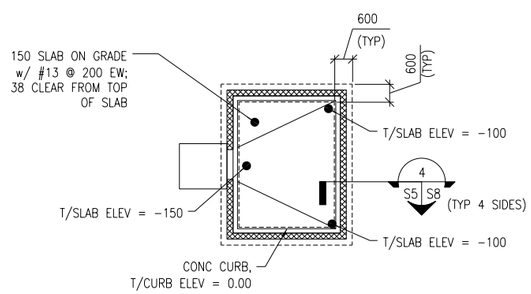

POL BUILDING FOUNDATION/ SLAB PLAN

2 S5 S5 SCALE: 1:100

N

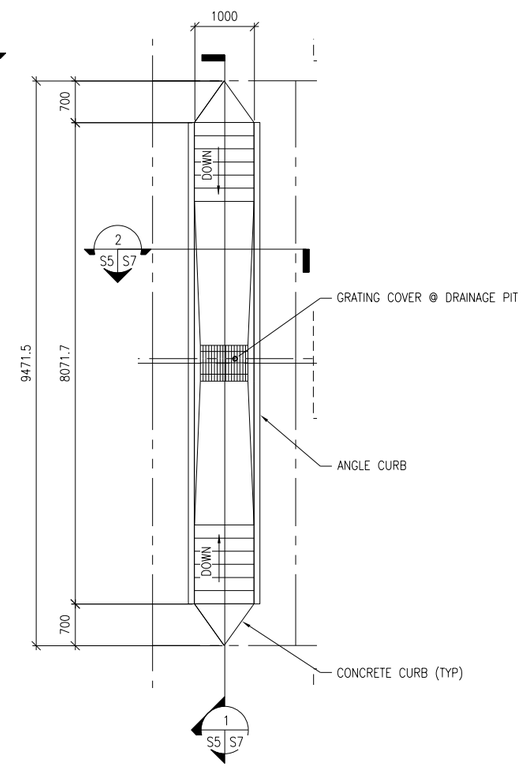

ENLARGED PIT PLAN

3 S5 S5 SCALE: 1:50

N

NOTES:

1. FINISH FIRST FLOOR ELEVATION SHALL BE (DATUM 0.0) ALL PLUS OR MINUS DIMENSIONS INDICATED ON PLAN OR REFERRED TO IN NOTES RELATE TO FINISH FIRST FLOOR ELEVATION.
2. TOP OF FOOTINGS SHALL BE -950 UNLESS OTHERWISE INDICATED.
3. UNLESS OTHERWISE INDICATED, FLOORS SHALL BE 200 THICK (UON) CONCRETE SLAB-ON-GRADE W/ #19 REBAR @ 200 OC E.W. (38 CLR. TOP) OVER 100 COMPACTED POROUS FILL (#57 STONE)
4. SPREAD FOOTINGS INDICATED THUS (XXXX) ON PLAN. REFER TO SPREAD FOOTING SCHEDULE ON SHEET S3.
5. REFER TO SHEETS S1 TO S3 FOR STRUCTURAL NOTES, BASIS OF DESIGN, SYMBOLS AND ABBREVIATIONS.
6. CTJ & CJ INDICATES SLAB CONTROL OR CONSTRUCTION JOINTS. RESPECTIVELY, REFER TO SHEET S10 FOR SECTIONS & DETAILS.
7. REFER TO ARCHITECTURAL SHEETS FOR MASONRY PARTITION TYPES.
8. ALL CMU TO BE FULLY GROUTED UNLESS OTHERWISE NOTED. SEE CMU WALL REINFORCING SCHEDULE ON SHEET S4.
9. SEE MECHANICAL AND ELECTRICAL SHEETS FOR CONCRETE PAD LOCATIONS, SIZES, AND THICKNESS NOT SHOWN. SEE SHEET S11 FOR DETAILS.
10. PRIOR TO CONSTRUCTION OF FOUNDATIONS, THE CONTRACTOR SHALL COORDINATE THE LOCATIONS OF ALL FOOTINGS, PIERS, AND TURN DOWN SLAB EDGES WITH THE PRE-ENGINEERED BUILDING DRAWINGS AND REVISE AS NECESSARY.
11. PRE-ENGINEERED COLUMN BASES SHALL BE DESIGNED AS PINNED ONLY.
12. LOCATIONS OF PORTAL FRAMES HAVE BEEN SHOWN IN PLAN AND SHALL NOT BE MODIFIED UNLESS APPROVED BY THE CONTRACTING OFFICER.
13. ALL PIERS FOR PRE-ENGINEERED BUILDING COLUMNS SHALL HAVE HAIR-PIN TIES AS INDICATED IN THE DETAILS.
14. ANCHOR BOLTS FOR PRE-ENGINEERED BUILDING COLUMNS SHALL BE (4)-20 DIA A36M ANCHOR BOLTS WITH 300 EMBED MIN.
15. TOP OF PIER ELEVATION SET AT -200. COORDINATE BOTTOM/BASE PLATE AND GROUT REQUIREMENTS WITH PRE-ENGINEERED BUILDING MANUFACTURER.

UNLESS OTHERWISE NOTED, LINEAR DIMENSIONS SHOWN ARE IN MILLIMETERS (mm)

0 2000 4000 8000

SCALE: 1: 100

US Army Corps of Engineers®
AFGHANISTAN ENGINEER DISTRICT

MARK	DESCRIPTION	DATE	APPR.	MARK	DESCRIPTION	DATE	APPR.

DESIGNED BY: DWN BY: CKD BY: SUBMITTED BY: DATE: SOLICITATION NO.: CONTRACT NO.: FILE NUMBER:
PLOT SCALE: 1:1 PLOT DATE: 11/22/2011 SIZE: ANSI D FILE NAME: VM10_S-105.dgn

U.S. ARMY CORPS OF ENGINEERS
AFGHANISTAN DISTRICT
APO AE 09356

STANDARD DESIGN
V10 - VEHICLE MAINTENANCE - 3 BAY

FOUNDATION PLAN

SHEET IDENTIFICATION
S5
SHEET 6 OF 26

P:\VM10_Vehicle Maintenance-3_Bay\VM10_S-105.dgn
11/23/2011 10:41:44 AM

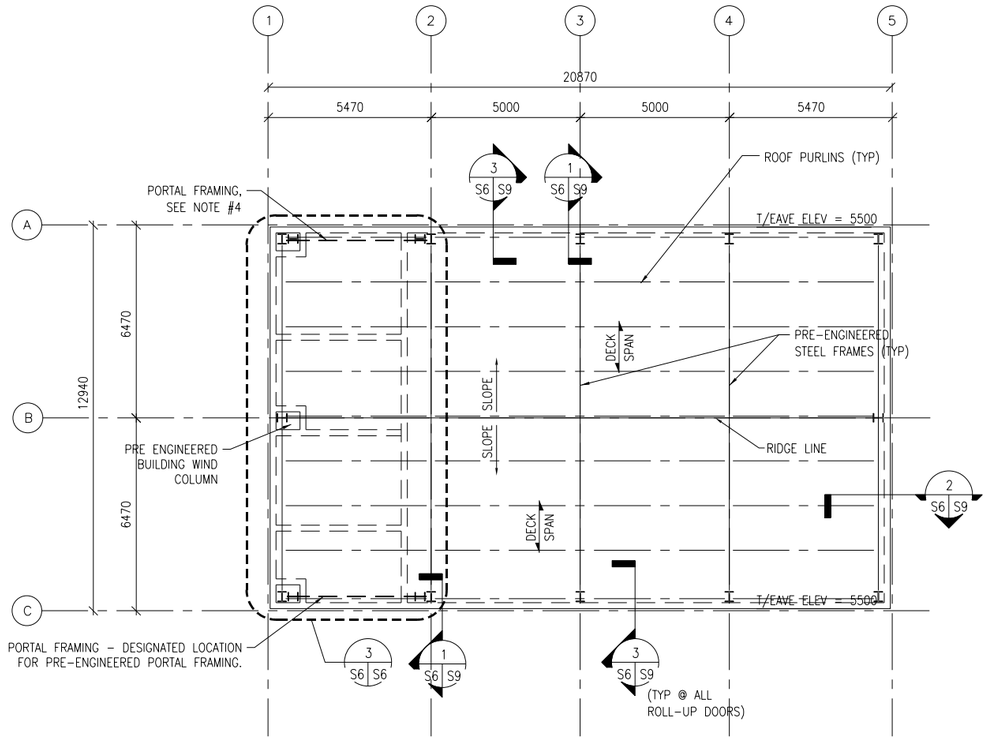

VEHICLE MAINTENANCE ROOF FRAMING PLAN

1 S6 S6 SCALE: 1:100

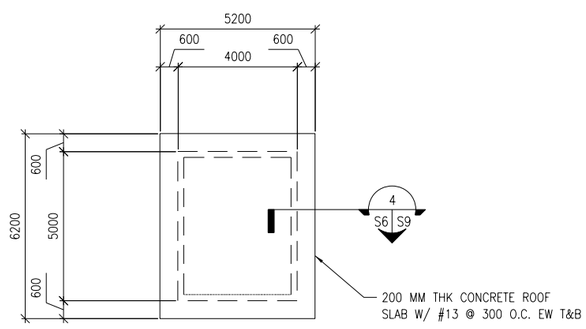

POL BUILDING ROOF FRAMING PLAN

2 S6 S6 SCALE: 1:100

NOTES:

1. REFER TO SHEETS S1 TO S3 FOR STRUCTURAL NOTES, BASIS OF DESIGN SYMBOLS AND ABBREVIATIONS.
2. THE PRE-ENGINEERED BUILDING MANUFACTURER SHALL COORDINATE ALL LOADING REQUIREMENTS INDICATED ON THE SHEETS AND SPECIFICATIONS WITH ARCH., STRUCT., MECH., AND ELEC.
3. PRE-ENGINEERED BUILDING COLUMN BASES SHALL BE DESIGNED AS PINNED ONLY.
4. LOCATIONS OF PORTAL FRAMES HAVE BEEN SHOWN IN PLAN AND SHALL NOT BE MODIFIED UNLESS APPROVED BY THE ENGINEER OF RECORD.
5. THE PRE-ENGINEERED BUILDING MANUFACTURER SHALL COORDINATE ALL HANGING LOADING FROM EQUIPMENT OR ARCHITECTURAL ELEMENTS AND INCLUDE IN THE DESIGN OF THE FRAMING.
6. SEE SPECIFICATION FOR LATERAL DRIFT REQUIREMENTS.
7. LOCATIONS OF END WALL COLUMNS SHALL BE MAINTAINED AT LOCATIONS INDICATED. THE BUILDING DOES NOT NEED PROVISIONS FOR FUTURE EXPANSION AT END WALLS.
8. THE PRE-ENGINEERED BUILDING MANUFACTURER IS RESPONSIBLE TO DESIGN ALL JAMB AND HEAD CONDITION SUPPORT SUB-FRAMING AS REQUIRED FOR THE LOADING INDICATED AND THE REQUIREMENTS OF THE ATTACHED COMPONENTS.
9. SEE CMU WALL REINFORCING SCHEDULE ON SHEET S4.

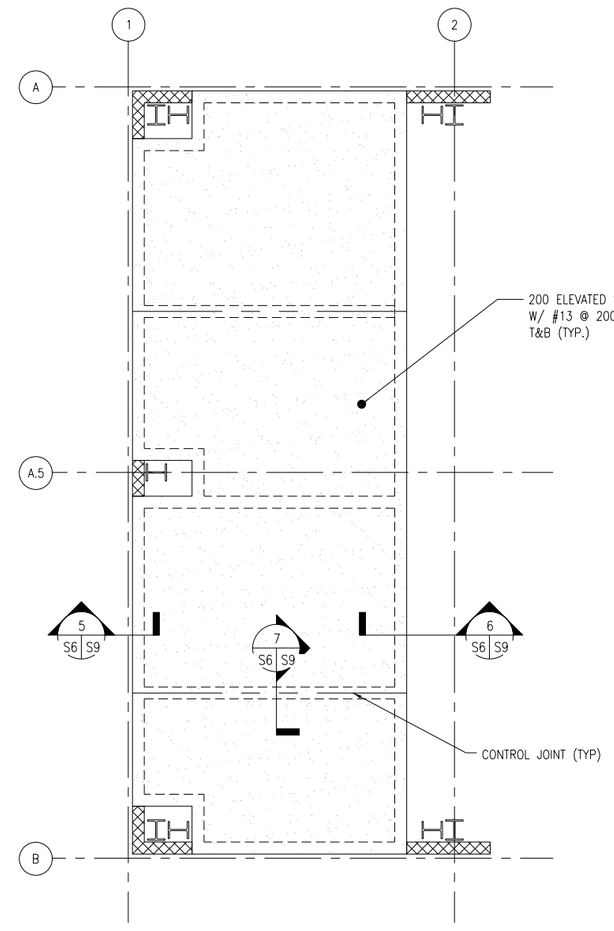

ENLARGED ELEVATED SLAB STORAGE AREA FRAMING PLAN

3 S6 S6 SCALE: 1:50

UNLESS OTHERWISE NOTED, LINEAR DIMENSIONS SHOWN ARE IN MILLIMETERS (mm)

0 2000 4000 8000

SCALE: 1: 100

US Army Corps of Engineers
AFGHANISTAN ENGINEER DISTRICT

MARK	DESCRIPTION	DATE	APPR.	MARK	DESCRIPTION	DATE	APPR.

U.S. ARMY CORPS OF ENGINEERS
AFGHANISTAN DISTRICT
APO AE 09356

DESIGNED BY: DATE:
DWN BY: CKD BY: SOLICITATION NO.:
SUBMITTED BY: CONTRACT NO.:
PLOT SCALE: 1:1 PLOT DATE: FILE NUMBER:
SIZE: ANSI D FILE NAME: VM10_S-106.dgn

STANDARD DESIGN
V10 - VEHICLE MAINTENANCE - 3 BAY

VEHICLE MAINTENANCE/POL BUILDING ROOF FRAMING PLAN

SHEET IDENTIFICATION
S6
SHEET 7 OF 26

P:\VM10_Vehicle Maintenance-3_Bay\VM10_S-106.dgn
11/23/2011 10:50:47 AM

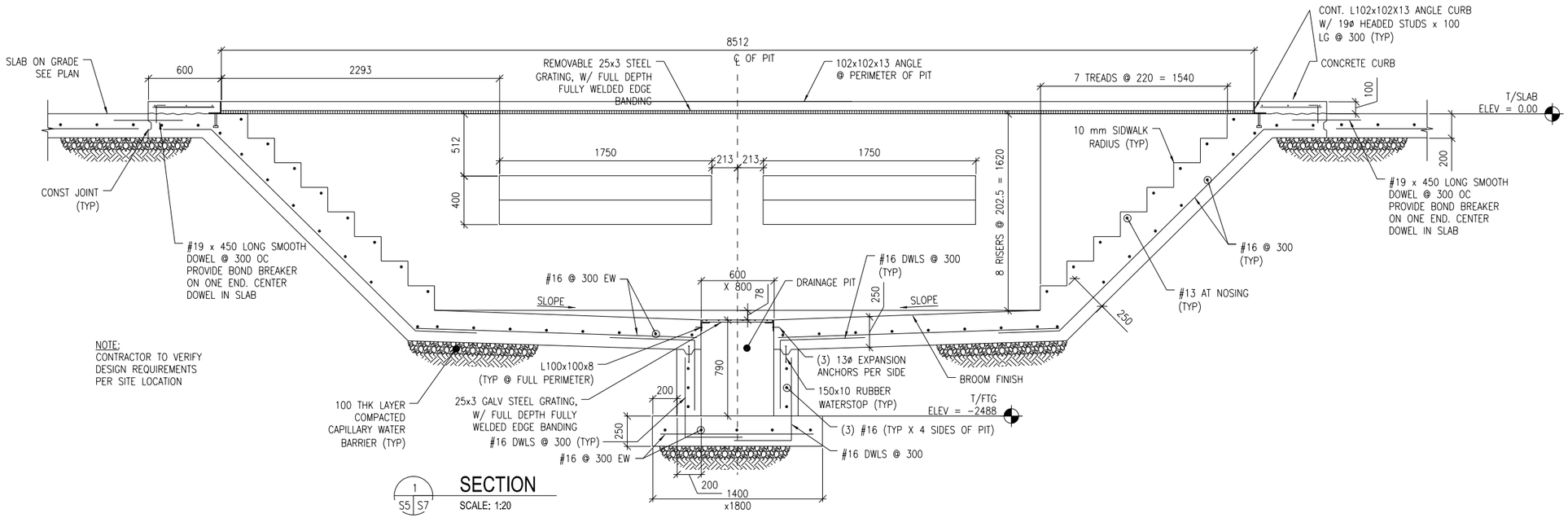

1 S5 S7 **SECTION**
SCALE: 1:20

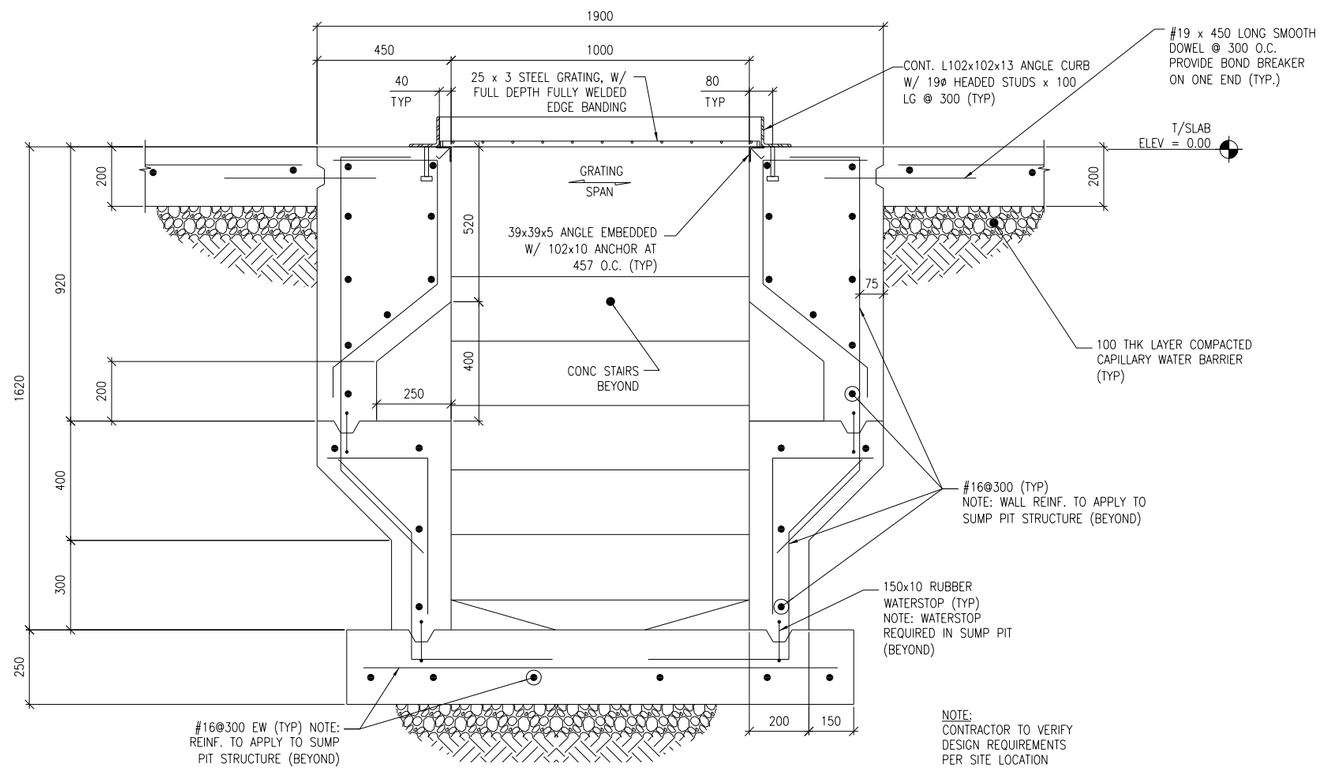

NOTE:
CONTRACTOR TO VERIFY DESIGN REQUIREMENTS PER SITE LOCATION

2 S5 S7 **SECTION**
SCALE: 1:10

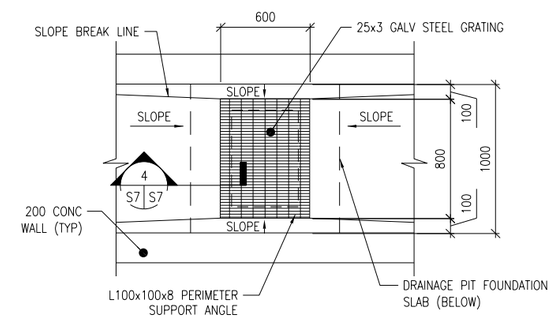

3 S7 S7 **DRAINAGE PIT DETAIL**
SCALE: 1:20

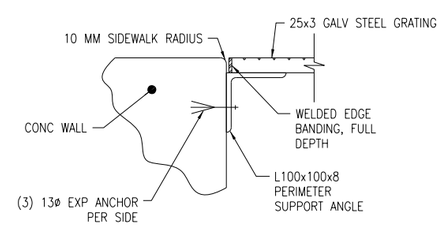

4 S7 S7 **SECTION**
SCALE: 1:5

UNLESS OTHERWISE NOTED, LINEAR DIMENSIONS SHOWN ARE IN MILLIMETERS (mm)

0 100 200 400
SCALE: 1: 5

0 200 400 800
SCALE: 1: 10

0 400 800 1600
SCALE: 1: 20

US Army Corps of Engineers®
AFGHANISTAN ENGINEER DISTRICT

MARK	DESCRIPTION	DATE	APPR.	MARK	DESCRIPTION	DATE	APPR.

U.S. ARMY CORPS OF ENGINEERS
AFGHANISTAN DISTRICT
APO AE 09356

DESIGNED BY: | DWN BY: | CKD BY: | SUBMITTED BY: | PLOT SCALE: 1:1 | PLOT DATE: 11/22/2011 | SIZE: ANSI D | FILE NAME: V M10_S-307.dgn | DATE: | SOLICITATION NO.: | CONTRACT NO.: | FILE NUMBER:

STANDARD DESIGN
V10 - VEHICLE MAINTENANCE - 3 BAY

VEHICLE MAINTENANCE/POL BUILDING
SECTIONS AND DETAILS

SHEET IDENTIFICATION
S7
SHEET 8 OF 26

P:\VM10_Vehicle Maintenance-3_Bay\VM10_S-307.dgn
11/23/2011 10:57:00 AM

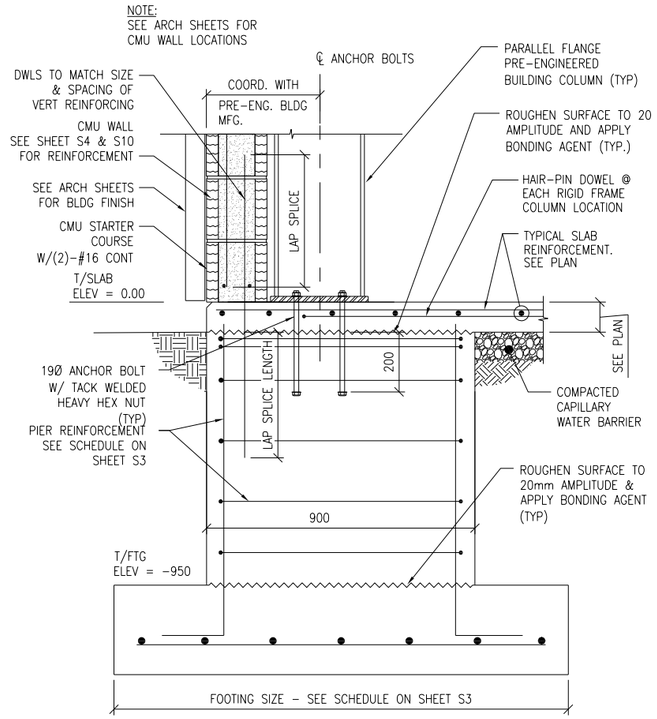

1 S5 S8 SECTION
SCALE: 1:10

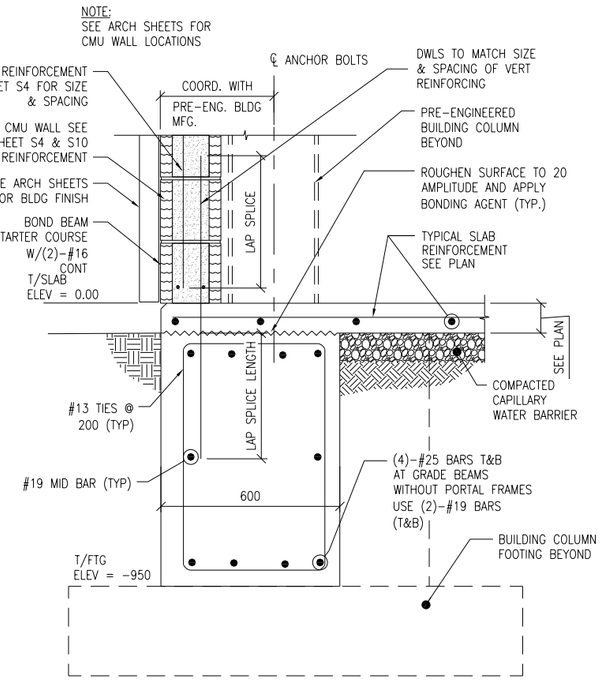

2 S5 S8 SECTION
SCALE: 1:10

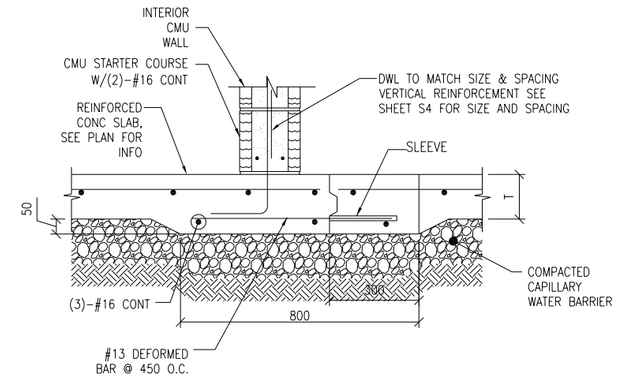

3 S5 S8 SECTION
SCALE: 1:10

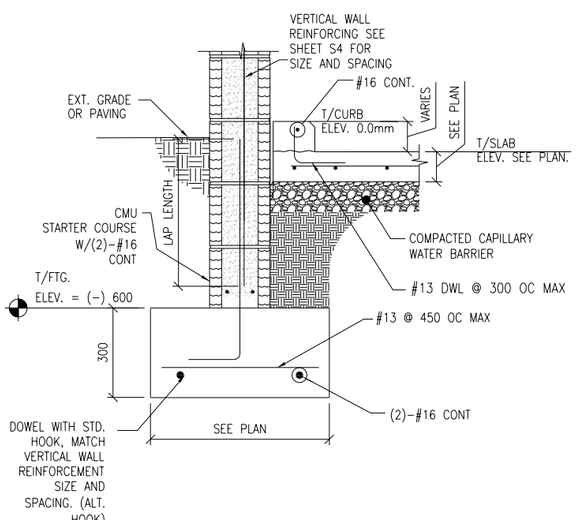

4 S5 S8 SECTION
SCALE: 1:10

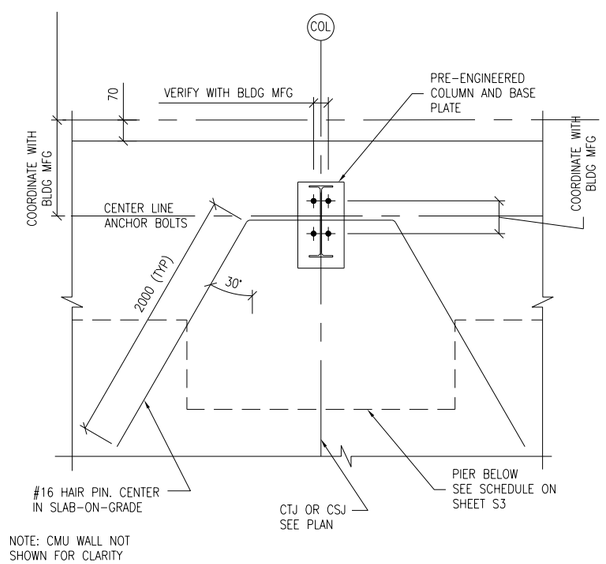

A S5 S8 COLUMN DETAIL
SCALE: 1:10

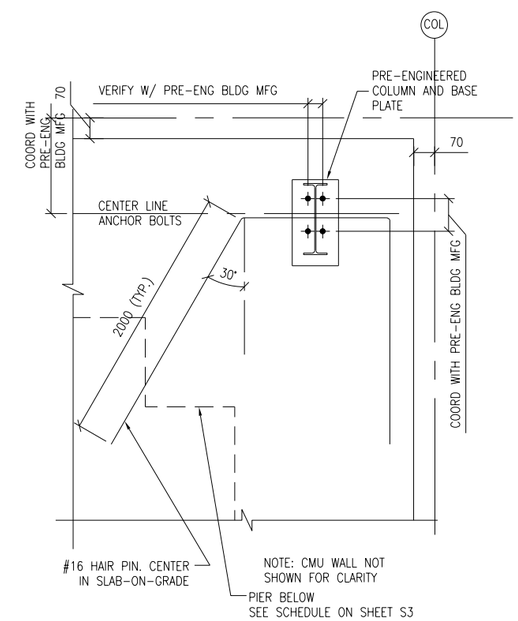

B S5 S8 COLUMN DETAIL
SCALE: 1:10

UNLESS OTHERWISE NOTED, LINEAR DIMENSIONS
SHOWN ARE IN MILLIMETERS (MM)

0 200 400 800
SCALE: 1: 10

US Army Corps of Engineers®
AFGHANISTAN ENGINEER DISTRICT

MARK	DESCRIPTION	DATE	APPR.	MARK	DESCRIPTION	DATE	APPR.

U.S. ARMY CORPS OF ENGINEERS
AFGHANISTAN DISTRICT
APO AE 09356

DESIGNED BY: | DATE:
DWN BY: | CKD BY: | SOLICITATION NO.:
SUBMITTED BY: | CONTRACT NO.:
PLOT SCALE: 1:1 | PLOT DATE: 11/23/2011 | FILE NUMBER:
SIZE: ANSI D | FILE NAME: VM10_S-308.dgn

STANDARD DESIGN
V10 - VEHICLE MAINTENANCE - 3 BAY

SECTIONS AND DETAILS

SHEET IDENTIFICATION
S8
SHEET 9 OF 26

P:\VM10_Vehicle Maintenance-3_Bay\VM10_S-308.dgn
11/23/2011 2:43:18 PM

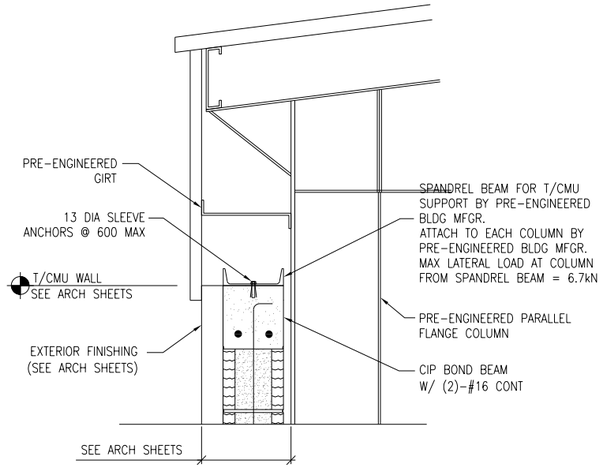

NOTE:
VERTICAL CMU WALL REINF NOT SHOWN FOR CLARITY, SEE SHEET S4 FOR SIZE AND SPACING (TYP)

1 S6 S9 **SECTION**
SCALE: 1:10

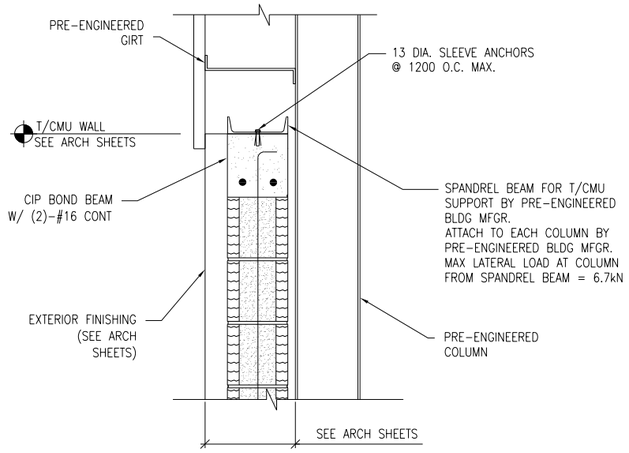

NOTE:
VERTICAL CMU WALL REINF NOT SHOWN FOR CLARITY, SEE SHEET S4 FOR SIZE AND SPACING (TYP)

2 S6 S9 **SECTION**
SCALE: 1:10

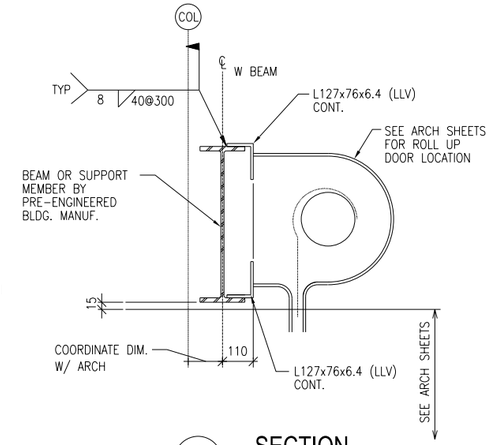

3 S6 S9 **SECTION**
SCALE: 1:10

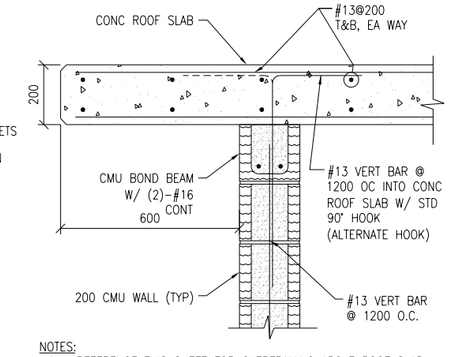

NOTES:
1. REFERENCE THIS SHEET FOR OVERFRAMING ABOVE ROOF SLAB.

4 S6 S9 **SECTION**
SCALE: 1:10

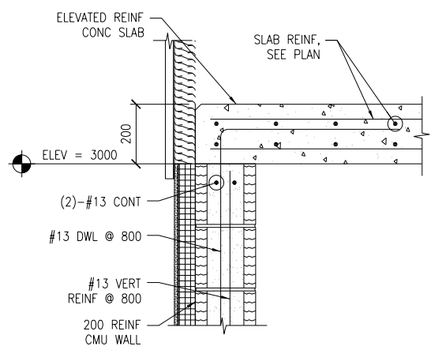

5 S6 S9 **SECTION**
SCALE: 1:10

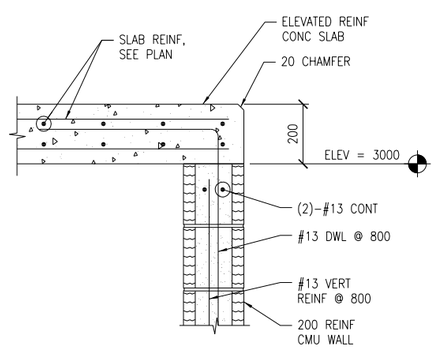

6 S6 S9 **SECTION**
SCALE: 1:10

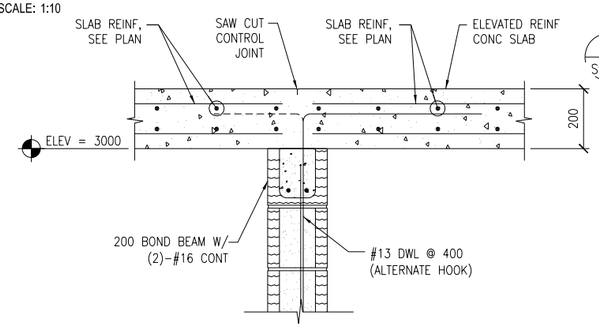

7 S6 S9 **SECTION**
SCALE: 1:10

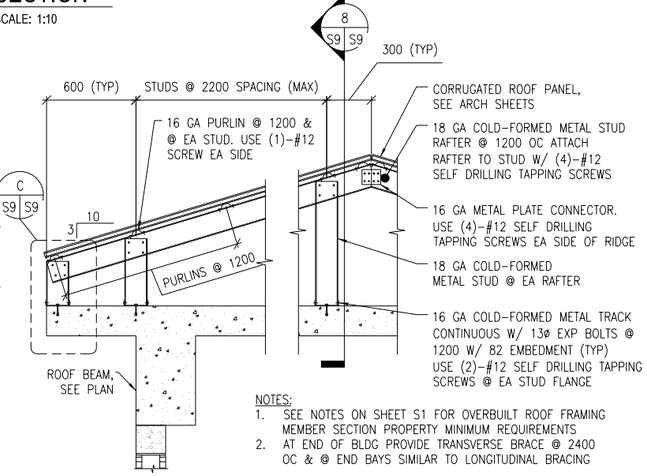

NOTES:
1. SEE NOTES ON SHEET S1 FOR OVERBUILT ROOF FRAMING MEMBER SECTION PROPERTY MINIMUM REQUIREMENTS
2. AT END OF BLDG PROVIDE TRANSVERSE BRACE @ 2400 OC & @ END BAYS SIMILAR TO LONGITUDINAL BRACING

A S9 S9 **TYPICAL ROOF BRACE LAYOUT DETAIL**
SCALE: NTS

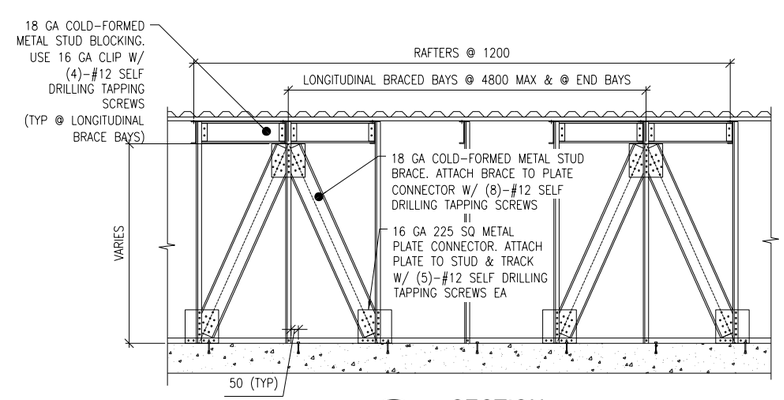

8 S9 S9 **SECTION**
SCALE: NTS

DETAIL NOTE:
AT END OF BLDG PROVIDE TRANSVERSE BRACE @ 2400 OC & @ END BAYS SIMILAR TO LONGITUDINAL BRACING

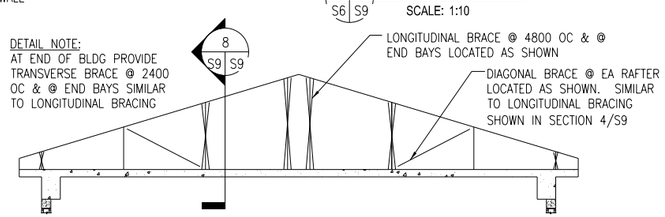

B S9 S9 **TYPICAL OVERBUILT ROOF FRAMING DETAIL**
SCALE: NTS

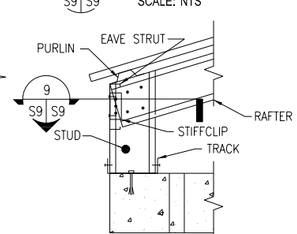

C S9 S9 **DETAIL**
SCALE: 1:10

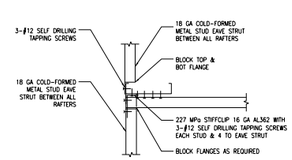

9 S9 S9 **SECTION**
SCALE: 1:5

DOUBLE LEDGE MEMBERS ARE 18 GA COLD-FORMED METAL TRACK.
FY = 344 MPa
DEPTH = 88.9mm
WIDTH = 34.8mm
MOMENT OF INERTIA, Ix = 236x103 mm^4
SECTION MODULUS, SX = 5.3x103 mm^3

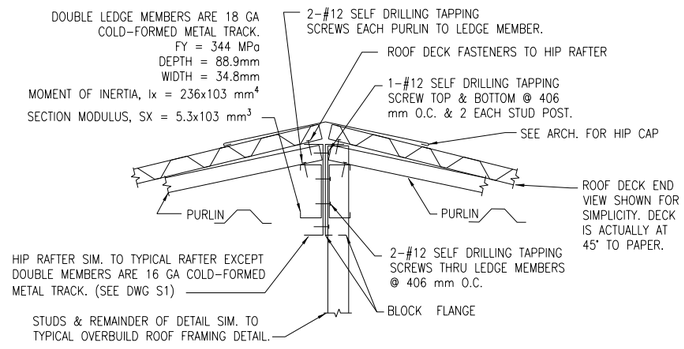

TYPICAL HIP FRAMING DETAIL
SCALE: 1:5

UNLESS OTHERWISE NOTED, LINEAR DIMENSIONS SHOWN ARE IN MILLIMETERS (mm)

0 100 200 400
SCALE: 1: 5

0 200 400 800
SCALE: 1: 10

US Army Corps of Engineers®
AFGHANISTAN ENGINEER DISTRICT

MARK	DESCRIPTION	DATE	APPR.	MARK	DESCRIPTION	DATE	APPR.

U.S. ARMY CORPS OF ENGINEERS
AFGHANISTAN DISTRICT
APO AE 09356

DESIGNED BY: | DATE:
DWN BY: | CKD BY: | SOLICITATION NO.:
SUBMITTED BY: | CONTRACT NO.:
PLOT SCALE: 1:1 | PLOT DATE: 11/22/2011 | FILE NUMBER:
SIZE: ANSI D | FILE NAME: VM10_S-309.dgn

STANDARD DESIGN
V10 - VEHICLE MAINTENANCE - 3 BAY

SECTIONS AND DETAILS

SHEET IDENTIFICATION
S9
SHEET 10 OF 26

P:\VM10_Vehicle Maintenance-3_Bay\VM10_S-309.dgn
11/23/2011 12:54:30 PM

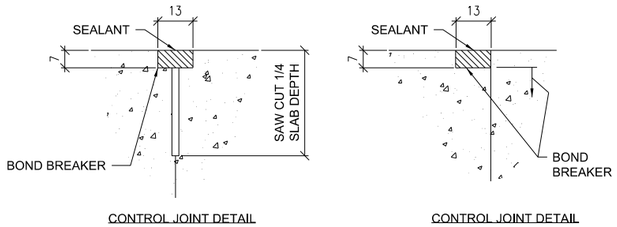

1 S10 TYPICAL CONCRETE SLAB JOINT FINISH DETAIL

SCALE: NTS

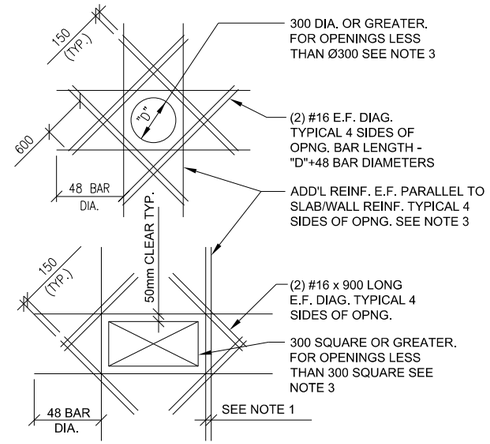

SLAB OPENINGS

DETAIL NOTES:

1. WHERE MORE THAN ONE ADDITIONAL BAR IS REQUIRED PARALLEL TO THE EXISTING SLAB/WALL REINFORCING THE ADDITIONAL REINFORCING BARS SHALL BE SPACED AT 100 ON CENTER.
2. ADDITIONAL REINFORCING PARALLEL TO THE SLAB/WALL REINFORCING SHALL BE #16 BARS THAT PROVIDE A STEEL AREA ON EACH SIDE OF THE OPENING EQUAL TO 1/2 THE AREA OF THE REINFORCING CUT BY THE OPENING.
3. FOR OPENINGS WITH SIDES OR DIAMETERS LESS THAN 300 SPREAD THE SLAB/WALL REINFORCING TO CLEAR THE OPENING.

4 S10 ADD'L CONCRETE REINFORCEMENT DETAILS

SCALE: NTS

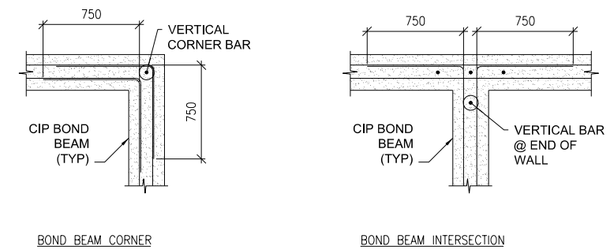

5 S10 CIP BOND BEAM DETAILS

SCALE: NTS

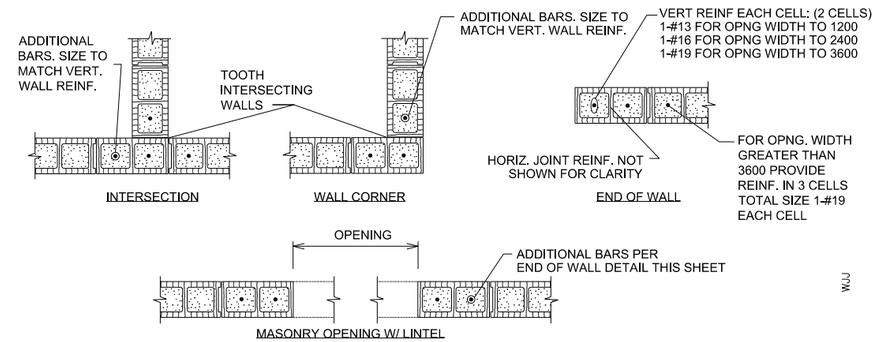

NOTE:

1. ALL CELLS TO BE FULLY GROUTED

6 S10 TYPICAL CMU DETAILS

SCALE: NTS

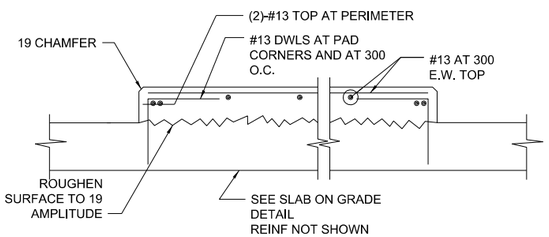

2 S10 INTERIOR EQUIPMENT PAD DETAIL

SCALE: NTS

DETAIL NOTE:

1. COORDINATE EQUIPMENT PAD SIZE AND LOCATIONS W/ ELECTRICAL/MECHANICAL SHEETS AND EQUIPMENT MANUFACTURER.

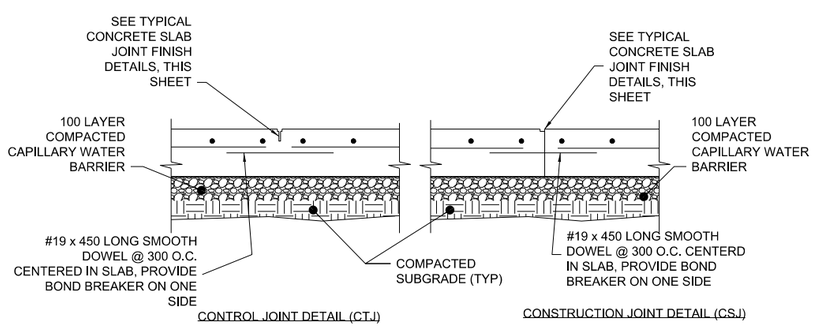

3 S10 TYPICAL SLAB ON GRADE JOINT DETAILS

SCALE: NTS

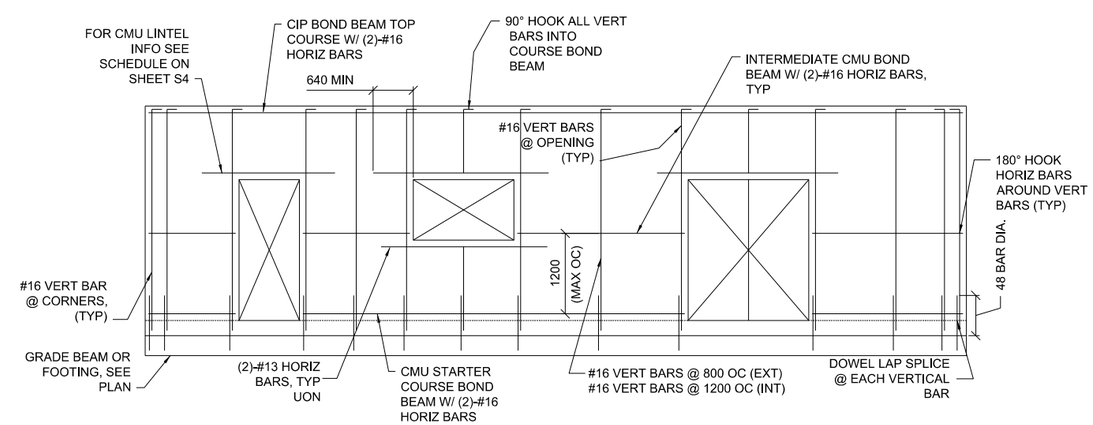

7 S10 MIN CMU WALL REINFORCING

SCALE: NTS

LINTEL NOTES:

CMU LINTEL REINFORCEMENT AS PER SCHEDULE ON SHEET S4

UNLESS OTHERWISE NOTED, LINEAR DIMENSIONS SHOWN ARE IN MILLIMETERS (mm)

US Army Corps of Engineers®
AFGHANISTAN ENGINEER DISTRICT

MARK	DESCRIPTION	DATE	APPR.	MARK	DESCRIPTION	DATE	APPR.

DESIGNED BY: WJJ | DWN BY: RCG | CKD BY: BAKER | SUBMITTED BY: CWW | PLOT SCALE: 1:1 | PLOT DATE: AS SHOWN | SIZE: ANSI D | FILE NAME: VM10_S-510.dgn | DATE: | SOLICITATION NO.: | CONTRACT NO.: | FILE NUMBER:

U.S. ARMY CORPS OF ENGINEERS
AFGHANISTAN DISTRICT
APO AE 09356

STANDARD DESIGN
V10 - VEHICLE MAINTENANCE - 3 BAY

TYPICAL DETAILS
(VEHICLE MAINTENANCE BUILDING)

SHEET IDENTIFICATION
S10
SHEET 11 OF 26

P:\VM10_Vehicle Maintenance-3_Bay\VM10_S-510.dgn
11/23/2011 11:18:32 AM

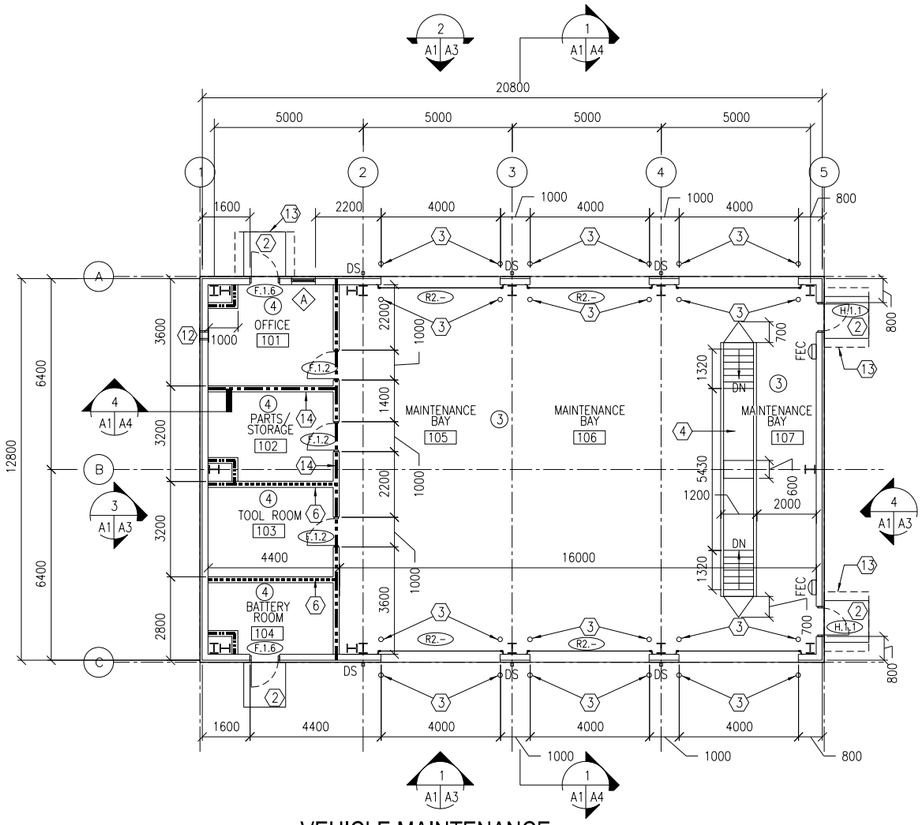

VEHICLE MAINTENANCE FLOOR PLAN

1 A1 A1 SCALE: 1:100

206.3 GSM

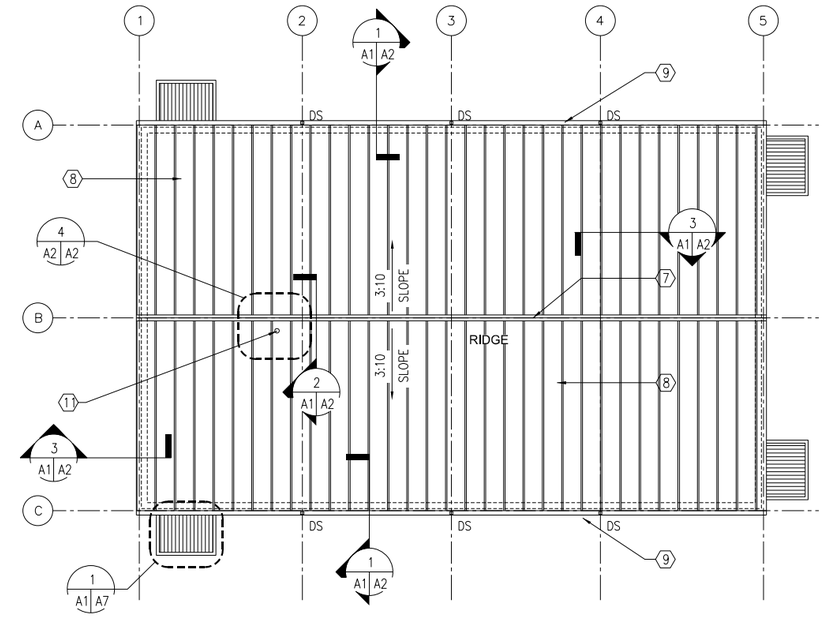

VEHICLE MAINTENANCE ROOF PLAN

2 A1 A1 SCALE: 1:100

VEHICLE MAINTENANCE ROOF PLAN NOTES:

1. PRODUCTS BY METAL BUILDING MANUFACTUER:
   A. PRE-FINISHED METAL ROOF PANELS.
   B. STEEL PURLINS
   C. VINYL FACED FIBERGLASS INSULATION.
   D. ACCESSORIES.
   E. GUTTERS, DOWNSPOUTS AND SUPPORTS.
2. ROOFING INSTALLTION SHALL BE CONTINUOUS WITH ALL OPERATIONS PROCEEDING TOGETHER. BEFORE CESSATION OF WORK ON EACH WORKING DAY OR WHEN WORK IS INTERRUPTED DUE TO RAINFALL OR OTHER CAUSES, THE ROOF SHALL BE SEALED AGAINST WATER INTRUSION.

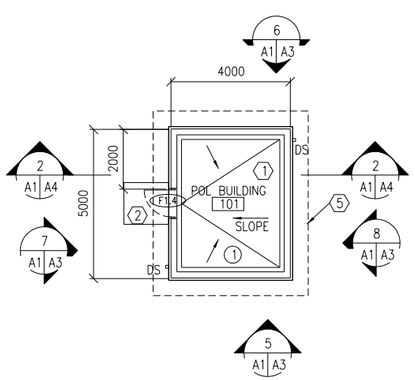

POL BUILDING FLOOR PLAN

3 A1 A1 SCALE: 1:100

21.5 GSM

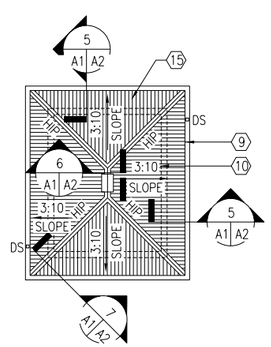

POL BUILDING ROOF PLAN

4 A1 A1 SCALE: 1:100

POL BUILDING ROOF PLAN NOTES:

1. PRODUCTS:
   A. CORRUGATED METAL ROOF PANELS.
2. ROOFING INSTALLATION SHALL BE CONTINUOUS WITH ALL OPERATIONS PROCEEDING TOGETHER. BEFORE CESSATION OF WORK ON EACH WORKING DAY OR WHEN WORK IS INTERRUPTED DUE TO RAINFALL OR OTHER CAUSES, THE ROOF SHALL BE SEALED AGAINST WATER INTRUSION.

ROOM FINISHES: (X)

1. WALLS: PAINTED PLASTER
   FLOOR: SEALED CONCRETE
   CEILING: PAINTED PLASTER APPLIED TO STRUCTURE
3. WALLS: METAL LINER PANEL ABOVE PAINTED PLASTER
   FLOOR: SEALED CONCRETE
   CEILING: METAL LINER PANEL
4. WALLS: PAINTED PLASTER
   FLOOR: SEALED CONCRETE
   CEILING: EXPOSED METAL DECK

GENERAL NOTES:

A. INTERIOR PARTITIONS ARE 3000 mm HIGH. INTERIOR PARTITIONS SHALL BE 200 mm CMU UNLESS OTHERWISE NOTED.

B. OPENINGS FOR DOORS SHALL BE LOCATED A MINIMUM OF 200 mm FROM THE ADJACENT WALL.

C. SURFACES TO BE PAINTED SHALL BE CLEAN AND FREE OF FOREIGN MATTER BEFORE APPLICATION OF PAINT. CLEANING SHALL BE SCHEDULED SO THAT DUST AND OTHER CONTAMINANTS WILL NOT FALL ON WET, NEWLY PAINTED SURFACES.

D. CONCRETE AND INTERIOR MASONRY SURFACES GROUTED SOLID SHALL BE ALLOWED TO DRY AT LEAST 30 DAYS BEFORE PAINTING EXCEPT CONCRETE SLAB ON GRADE WHICH SHALL BE ALLOWED TO CURE 90 DAYS BEFORE PAINTING.

E. PAINTS CONTAINING LEAD IN EXCESS OF 0.06 PERCENT BY WEIGHT OF THE TOTAL NONVOLATILE CONTENT SHALL NOT BE USED.

F. MERCURIAL FUNGICIDES SHALL NOT BE USED IN OIL-BASE PAINT.

G. REMOVE LOOSE DIRT AND CLEAN SURFACES BEFORE PAINTING. APPLY PAINT TO INTERIOR STRUCTURAL RIGID FRAMINGS AND CEILINGS AND TEST FOR ADHESION. PRIMER COAT FOR MASONRY. INITIAL FIRST COAT WITH AN ACRYLIC LATEX PAINT FOR EXTERIOR SURFACES AND A SECOND COAT WITH A WATER REPELLENT ACRYLIC LATEX PAINT.

H. METAL DOORS AND FRAMES SHALL RECEIVE A PRIMER COAT PLUS TWO COATS OF PAINT.

I. DIMENSIONS ARE TO STRUCTURAL COLUMN GRID, EDGE OF WINDOW OPENINGS, AND TO HINGE SIDE OF DOOR OPENINGS.

J. THE 2 HOUR SEPARATION BETWEEN THE MAINTENANCE BAY AND ALL OTHER ANCILLARY INTERIOR SPACES IS PROVIDED AS DIRECTED IN THE SCOPE OF WORK TO COMPLY WITH NFPA 101, 40.2.4.1.2 AND 40.2.5.1. IN ACCORDANCE WITH NFPA 101, TABLE 6.1.14.4.1, THE OFFICE MUST HAVE A 2 HOUR SEPARATION FROM ALL OTHER INTERIOR SPACES. THE BATTERY ROOM MUST HAVE A MINIMUM 1 HOUR SEPARATION FROM ALL OTHER INTERIOR SPACES. PROVIDE SEPARATION AS INDICATED.

K. FILL ANULAR SPACE AT ANY AND ALL PENETRATIONS IN FIRE RATED PARTITIONS AND CEILINGS WITH APPROPRIATE FIRE STOPPING MATERIALS.

KEY NOTES: (X)

1 DEPRESS SLAB 100 mm TO 150 mm - RE: 9,10/A5
2 CONCRETE STOOP - RE: DETAIL 1/A6.
3 GALVANIZED STEEL BOLLARD FILLED WITH CONCRETE ON BOTH SIDE OF ROLL UP DOOR, TYPICAL. SEE DETAIL 4/A6.
4 MAINTENANCE PIT. SEE SECTION 2/A6 AND 3/A6.
5 LINE OF ROOF OVERHANG ABOVE.
6 1-HOUR RATED PARTITION.
7 CONTINUOUS RIDGE FLASHING.
8 PRE-FINISHED METAL ROOF PANELS OVER STEEL PURLINS WITH VINYL FACED FIBERGLASS INSULATION BY METAL BUILDING MANUFACTURER.
9 METAL GUTTERS AND DOWNSPOUTS WITH SPLASH BLOCK.
10 LINE OF BUILDING WALL, BELOW
11 ROOF PENETRATION RE: PLUMBING DRAWINGS
12 TWO-PIECE WALL THIMBLE AND TRIM PLATE FOR OPTIONAL WOOD BURNING STOVE CHIMNEY PIPE. STOVE AND PIPE BY OTHERS.
13 LINE OF CANOPY ABOVE-SEE SHEET A7.
14 2-HOUR RATED PARTITION.
15 CORRUIGATED METAL ROOF PANELS N COLD-FORMED METAL FRAMING.

LEGEND:

F.1.4	DOOR TYPE, SEE SHEET A5
A	WINDOW TYPE, SEE SHEET A5
X	KEY NOTE
FEC	FIRE EXTINGUISHER CABINET
1	ROOM FINISH TYPE DESIGNATION
	1-HOUR RATED PARTITION
	2-HOUR RATED PARTITION

UNLESS OTHERWISE NOTED, LINEAR DIMENSIONS SHOWN ARE IN MILLIMETERS (mm)

0 2000 4000 8000

SCALE: 1: 100

US Army Corps of Engineers
AFGHANISTAN ENGINEER DISTRICT

MARK	DESCRIPTION	DATE	APPR.	MARK	DESCRIPTION	DATE	APPR.

DESIGNED BY: DWN BY: CKD BY: SUBMITTED BY: PLOT SCALE: 1:1 PLOT DATE: 11/20/2011 SIZE: ANSI D FILE NAME: VM10_A-101.dgn FILE NUMBER: CONTRACT NO.: SOLICITATION NO.: DATE:

U.S. ARMY CORPS OF ENGINEERS
AFGHANISTAN DISTRICT
APO AE 09356

STANDARD DESIGN
V10 - VEHICLE MAINTENANCE - 3 BAY

FLOOR AND ROOF PLANS

SHEET IDENTIFICATION
A1
SHEET 12 OF 26

P:\VM10_Vehicle Maintenance-2_Bay\VM10_A-101.dgn
11/23/2011 11:23:02 AM

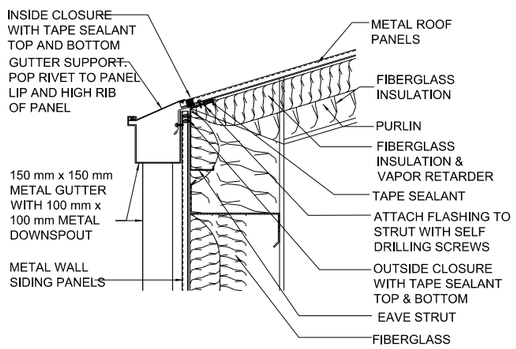

1 A1 A2 EAVE WITH GUTTER DETAIL
SCALE: 1:10

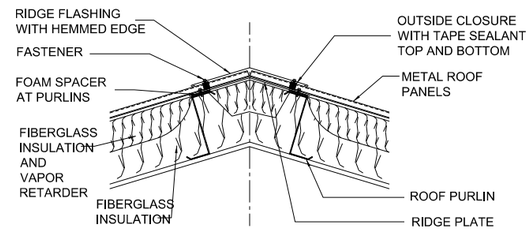

2 A1 A2 RIDGE DETAIL
SCALE: 1:10

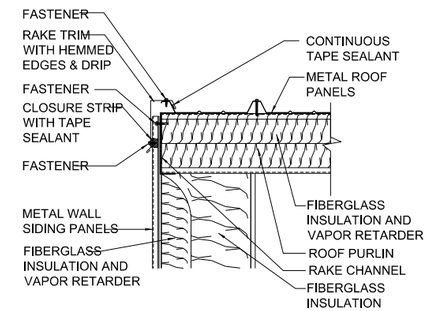

3 A1 A2 RAKE DETAIL
SCALE: 1:10

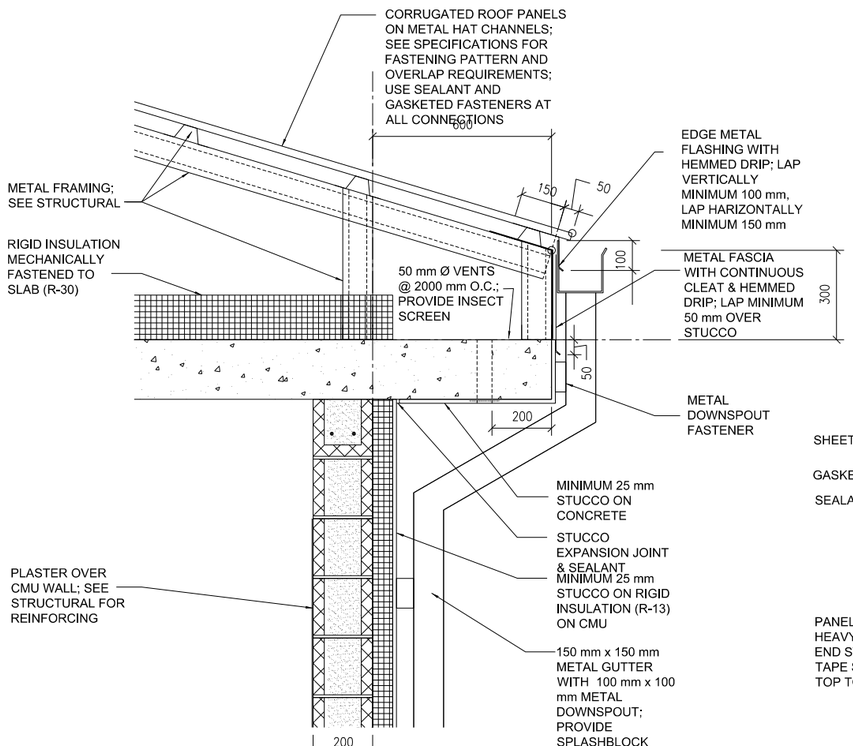

5 A1 A2 POL EAVE DETAIL
SCALE: 1:10

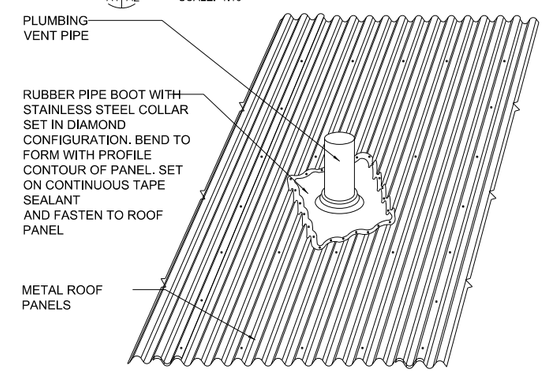

4 A1 A2 PLUMBING VENT DETAIL
SCALE: NONE

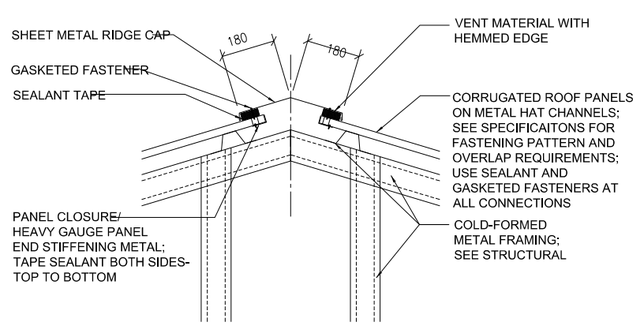

6 A1 A2 POL RIDGE VENT DETAIL
SCALE: 1:10

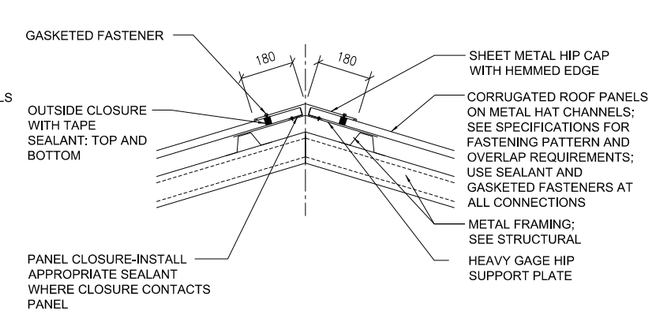

7 A1 A2 POL HIP DETAIL
SCALE: 1:10

UNLESS OTHERWISE NOTED, LINEAR DIMENSIONS SHOWN ARE IN MILLIMETERS (mm)
0 200 400 800
SCALE: 1: 10

US Army Corps of Engineers®
AFGHANISTAN ENGINEER DISTRICT

MARK	DESCRIPTION	DATE	APPR.	MARK	DESCRIPTION	DATE	APPR.

DESIGNED BY: | DATE: | DWN BY: | CKD BY: | SOLICITATION NO.: | SUBMITTED BY: | CONTRACT NO.: | PLOT SCALE: 1:1 | PLOT DATE: 11/22/2011 | FILE NUMBER: | SIZE: ANSI D | FILE NAME: VM10_A-502.dgn

U.S. ARMY CORPS OF ENGINEERS
AFGHANISTAN DISTRICT
APO AE 09356

STANDARD DESIGN
V10 - VEHICLE MAINTENANCE - 3 BAY

ROOF DETAILS

SHEET IDENTIFICATION
A2
SHEET 13 OF 26

P:\VM10_Vehicle Maintenance-3_Bay\VM10_A-502.dgn
11/23/2011 2:35:04 PM

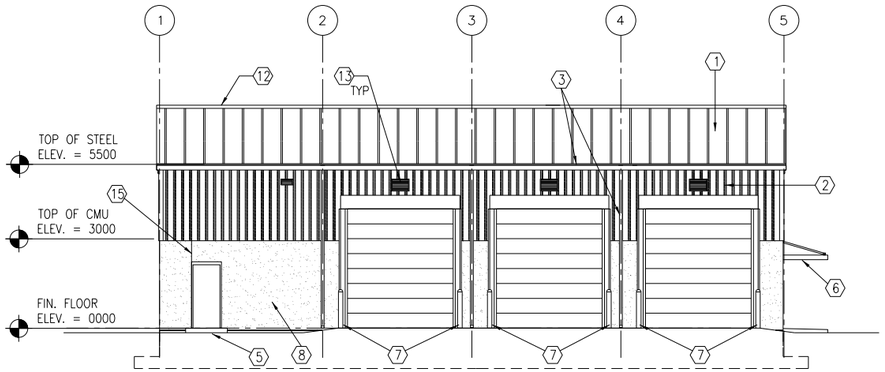

1 A1 A3 EAST ELEVATION
SCALE: 1:100
VEHICLE MAINTENNCE BUILDING

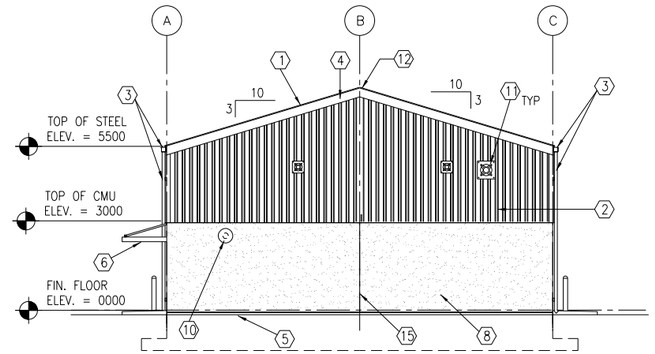

3 A1 A3 SOUTH ELEVATION
SCALE: 1:100
VEHICLE MAINTENNCE BUILDING

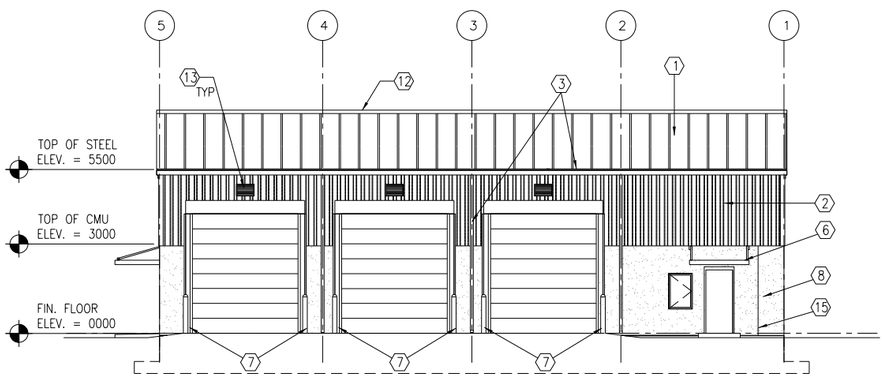

2 A1 A3 WEST ELEVATION
SCALE: 1:100
VEHICLE MAINTENNCE BUILDING

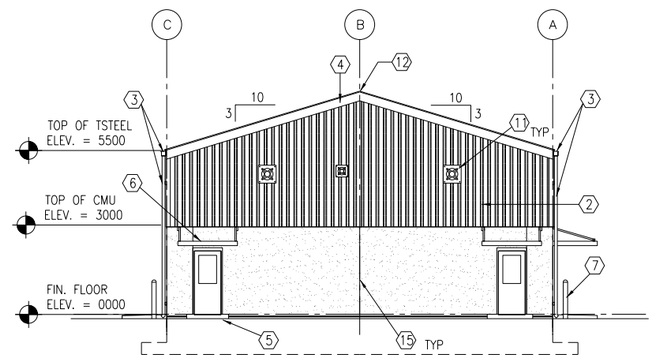

4 A1 A3 NORTH ELEVATION
SCALE: 1:100
VEHICLE MAINTENNCE BUILDING

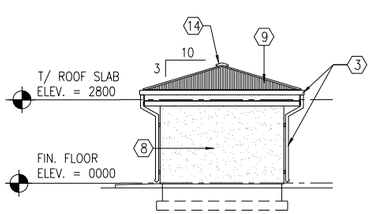

5 A1 A3 POL EAST ELEVATION
SCALE: 1:100
POL BUILDING

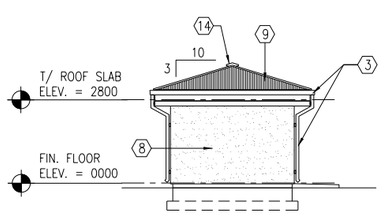

6 A1 A3 POL WEST ELEVATION
SCALE: 1:100
POL BUILDING

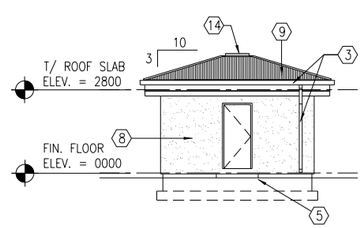

7 A1 A3 POL SOUTH ELEVATION
SCALE: 1:100
POL BUILDING

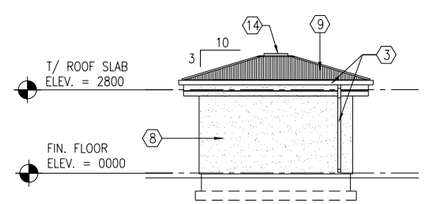

8 A1 A3 POL NORTH ELEVATION
SCALE: 1:100
POL BUILDING

KEY NOTES:

1. PRE-FINISHED METAL ROOF PANELS BY METAL BUILDING MANUFACTURER.
2. PRE-FINISHED METAL WALL PANELS BY METAL BUILDING MANUFACTURER.
3. METAL GUTTERS AND DOWNSPOUTS BY METAL BUILDING MANUFACTURER, TYPICAL.
4. RAKE TRIM BY METAL BUILDING MANUFACTURER.
5. CONCRETE STOOP - RE: DETAIL 1/A6
6. METAL CANOPY BY METAL BUILDING MANUFACTURER.
7. GALVANIZED STEEL BOLLARD FILLED WITH CONCRETE ON EACH SIDE OF ROLL UP DOOR.
8. STUCCO AND RIGID INSULATION SYSTEM OVER CMU.
9. CORRUGATED METAL ROOF PANELS ON COLD-FORMED METAL FRAMING.
10. 275 mm SLEEVE THROUGH WALL WITH CAP FOR FUTURE WOOD BURNING STOVE. MOUNT SLEEVE 2400 mm ABOVE FINISH FLOOR. STOVE BY OTHERS.
11. EXHAUST FAN - RE: MECH
12. CONTINUOUS RIDGE FLASHING - RE: 2/A2
13. LOUVER - RE: MECH
14. RIDGE VENT AND FLASHING - RE: 6,7/A2
15. CMU CONTROL JOINT, TYPICAL.

GENERAL NOTES:

1. COORDINATE SIZE AND LOCATION OF OPENINGS FOR MECHANICAL ITEMS WITH MECHANICAL DRAWINGS.
2. PROVIDE STRUCTURAL LINTELS AS REQUIRED - RE: STRUCT.
3. PROVIDE CMU CONTROL JOINT AT EACH STEEL COLUMN - RE: DETAIL 8/A4.

UNLESS OTHERWISE NOTED, LINEAR DIMENSIONS SHOWN ARE IN MILLIMETERS (mm)

0 2000 4000 8000

SCALE: 1: 100

US Army Corps of Engineers
AFGHANISTAN ENGINEER DISTRICT

MARK	DESCRIPTION	DATE	APPR.	MARK	DESCRIPTION	DATE	APPR.

DESIGNED BY: DWN BY: CKD BY: SUBMITTED BY: PLOT SCALE: 1:1 PLOT DATE: 11/20/2017 SIZE: ANSI D FILE NAME: VM10_A-203.dgn DATE: SOLICITATION NO.: CONTRACT NO.: FILE NUMBER:

U.S. ARMY CORPS OF ENGINEERS
AFGHANISTAN DISTRICT
APO AE 09356

STANDARD DESIGN
V10 - VEHICLE MAINTENANCE - 3 BAY

EXTERIOR ELEVATIONS

SHEET IDENTIFICATION
A3
SHEET 14 OF 26

P:\VM10_Vehicle Maintenance-3_Bay\VM10_A-203.dgn
11/23/2017 01:11 AM

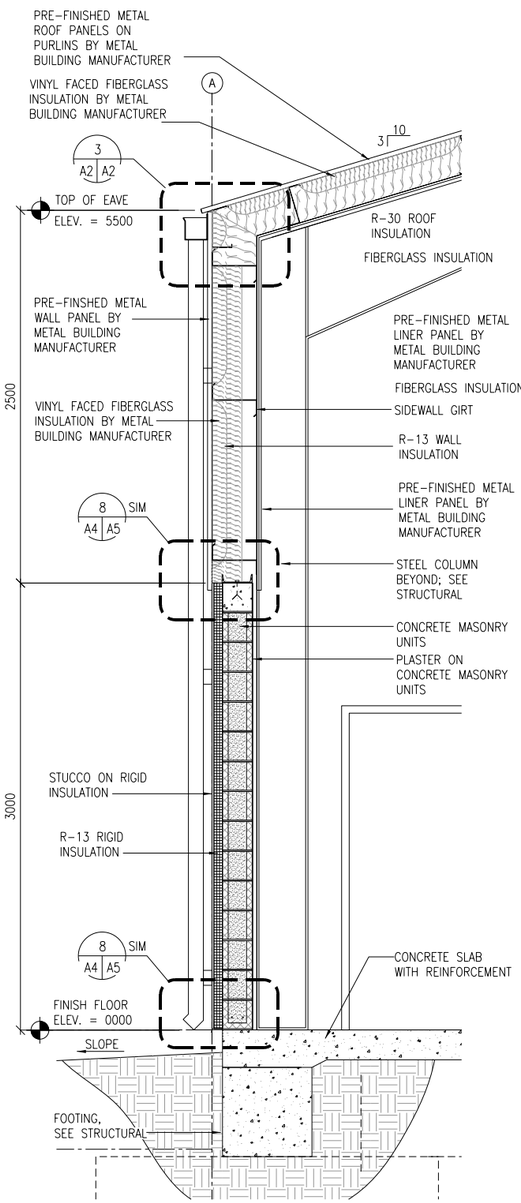

3 A4 A4 WALL SECTION
SCALE: 1:20

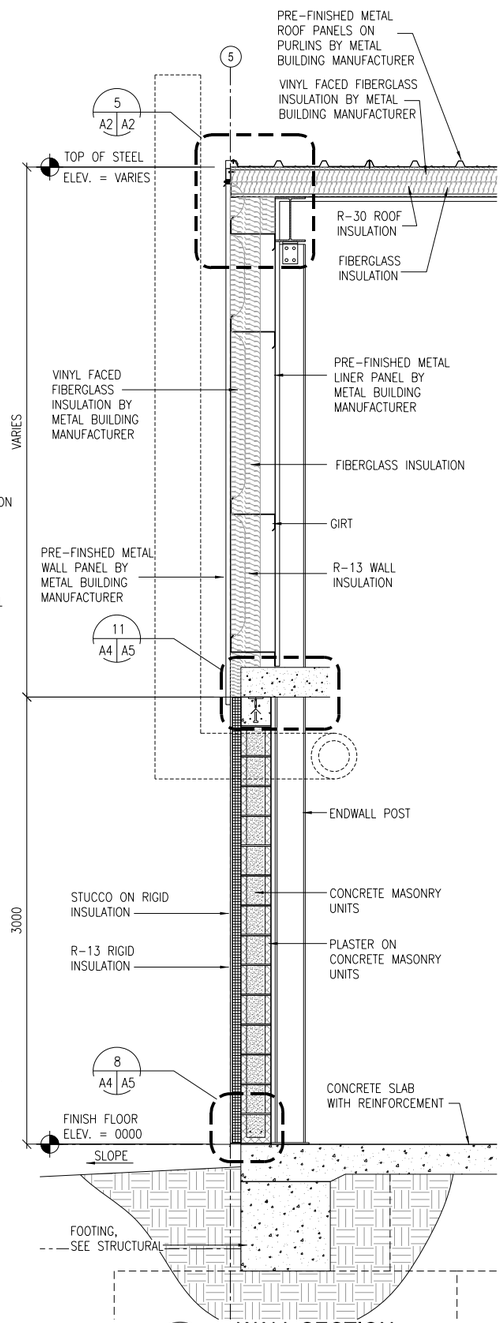

4 A4 A4 WALL SECTION
SCALE: 1:20

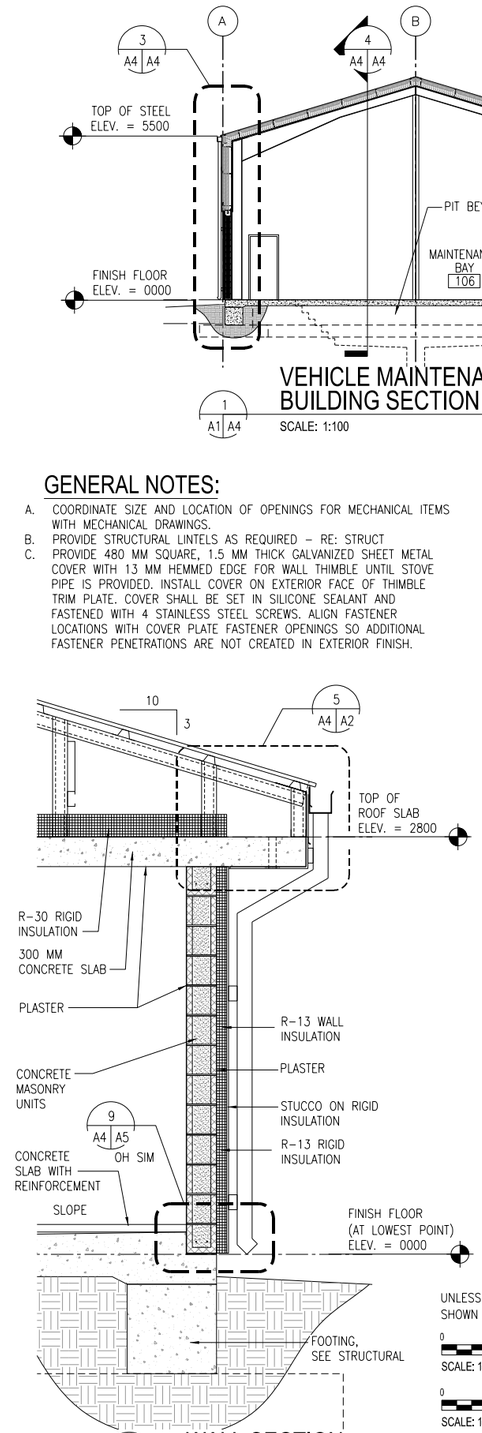

5 A4 A4 WALL SECTION
SCALE: 1:20

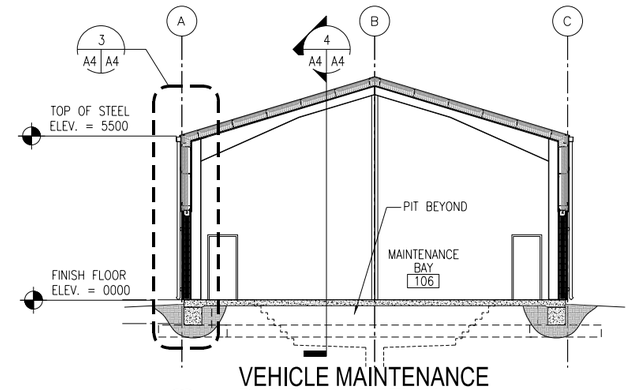

1 A1 A4 VEHICLE MAINTENANCE BUILDING SECTION
SCALE: 1:100

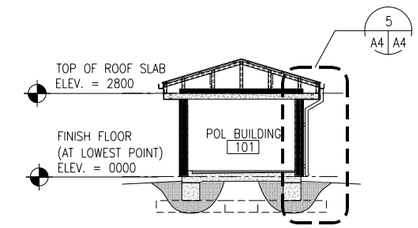

2 A1 A4 POL BUILDING BUILDING SECTION
SCALE: 1:100

GENERAL NOTES:

A. COORDINATE SIZE AND LOCATION OF OPENINGS FOR MECHANICAL ITEMS WITH MECHANICAL DRAWINGS.
B. PROVIDE STRUCTURAL LINTELS AS REQUIRED – RE: STRUCT
C. PROVIDE 480 MM SQUARE, 1.5 MM THICK GALVANIZED SHEET METAL COVER WITH 13 MM HEMMED EDGE FOR WALL THIMBLE UNTIL STOVE PIPE IS PROVIDED. INSTALL COVER ON EXTERIOR FACE OF THIMBLE TRIM PLATE. COVER SHALL BE SET IN SILICONE SEALANT AND FASTENED WITH 4 STAINLESS STEEL SCREWS. ALIGN FASTENER LOCATIONS WITH COVER PLATE FASTENER OPENINGS SO ADDITIONAL FASTENER PENETRATIONS ARE NOT CREATED IN EXTERIOR FINISH.

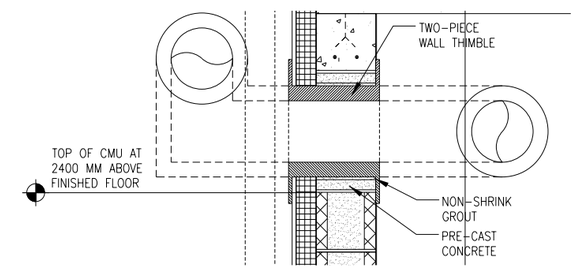

6 A4 A4 THIMBLE DETAIL, TYPICAL
SCALE: 1:10

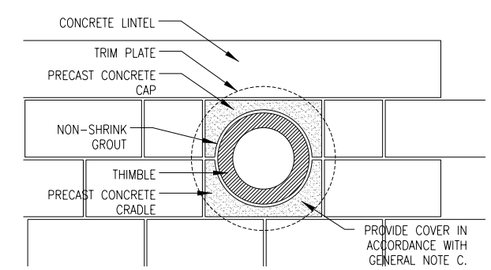

7 A4 A4 THIMBLE DETAIL, TYPICAL
SCALE: 1:10

UNLESS OTHERWISE NOTED, LINEAR DIMENSIONS SHOWN ARE IN MILLIMETERS (mm)

0 200 400 800
SCALE: 1: 10

0 400 800 1600
SCALE: 1: 20

0 2000 4000 8000
SCALE: 1: 100

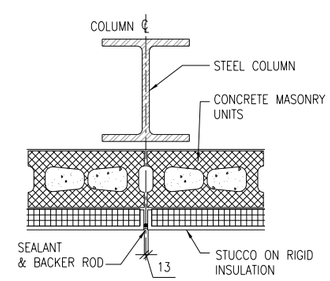

8 A4 A4 TYPICAL CMU CONTROL JOINT
SCALE: 1:10

US Army Corps of Engineers
AFGHANISTAN ENGINEER DISTRICT

MARK	DESCRIPTION	DATE	APPR.	MARK	DESCRIPTION	DATE	APPR.

DESIGNED BY: | DATE:
DWN BY: | CKD BY: | SOLICITATION NO.:
SUBMITTED BY: | CONTRACT NO.:
PLOT SCALE: 1:1 | PLOT DATE: 11/22/2011 | FILE NUMBER:
SIZE: ANSI D | FILE NAME: VM10_A-304.dgn

U.S. ARMY CORPS OF ENGINEERS
AFGHANISTAN DISTRICT
APO AE 09356

STANDARD DESIGN
V10 - VEHICLE MAINTENANCE - 3 BAY

BUILDING AND WALL SECTIONS

SHEET IDENTIFICATION
A4
SHEET 15 OF 26

P:\VM10_Vehicle Maintenance-3_Bay\VM10_A-304.dgn
11/23/2011 11:56:14 AM

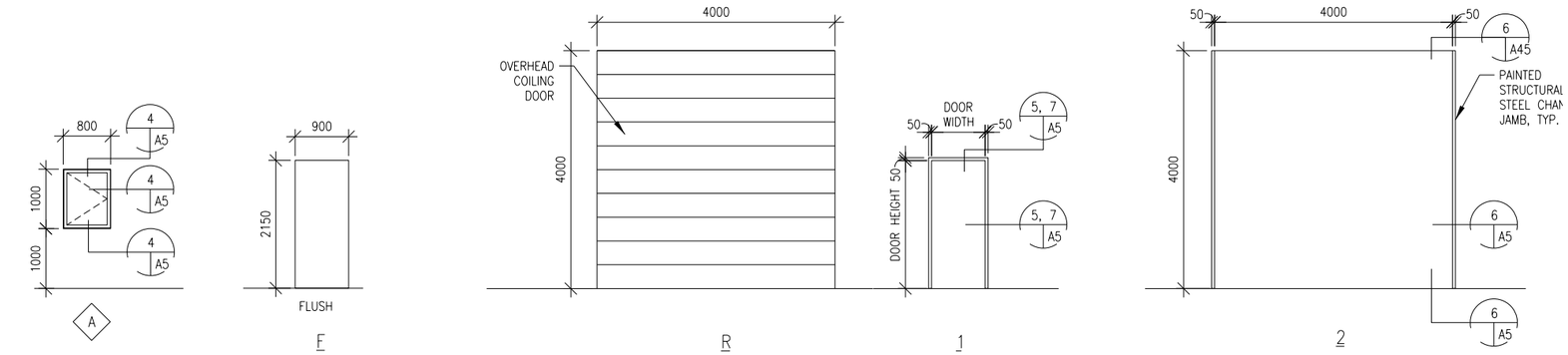

WINDOW TYPES NOTES:

1. ALL EXTERIOR WINDOWS SHALL BE WOOD WITH INSECT SCREENS. WINDOWS SHALL BE COMMERCIAL GRADE.
2. GLAZING SHALL BE ACRYLIC SHEET.

DOOR TYPES NOTES:

1. INTERIOR AND EXTERIOR METAL DOORS AND FRAME COLORS SHALL MATCH ADJACENT WALL COLORS AS SELECTED BY THE CONTRACTING OFFICER.
2. HARDWARE SHALL BE HEAVY DUTY, COMMERCIAL GRADE, STAINLESS STEEL WITH A MATTE FINISH.
3. FRAMES, EXCEPT FIRE-RATED FRAMES, SHALL BE MOUNTED AND ADJUSTED IN ACCORDANCE WITH MANUFACTURER'S INSTRUCTIONS. FRAMES SHALL BE FASTENED WITH MINIMUM OF THREE FASTENING POINTS PER SIDE AT REGULAR INTERVALS.
4. DIMENSIONS SHOWN ON DOOR SCHEDULE ARE BASED UPON MODULAR MASONRY (OR ROUGH OPENING), HEIGHT OF 2200mm FOR STANDARD PERSONNEL DOORS. CONTRACTOR SHALL COORDINATE WITH DOOR SUPPLIER TO ENSURE THAT DIMENSIONS OF DOORS AND FRAMES PROVIDED ARE COMPATIBLE WITH DOOR OPENING DIMENSIONS.
5. DOORS SHALL BE 90 MINUTE DOORS AS REQUIRED IN 2 HOUR RATED WALLS (IBC TABLE 7.5.4) AND NFPA (TABLE 8.3.4.2).

1 A5 A5 WINDOW TYPE

SCALE: 1:50

2 A5 A5 DOOR TYPES

SCALE: 1:50

3 A5 A5 FRAME TYPES

SCALE: 1:50

UNLESS OTHERWISE NOTED, LINEAR DIMENSIONS SHOWN ARE IN MILLIMETERS (mm)

0 1000 2000 4000
SCALE: 1: 50

0 200 400 800
SCALE: 1: 10

DOOR HARDWARE TYPES:

HW-1 1-1/2 PR HINGES
1 EA EXIT DEVICE, SURFACE MOUNTED F08
1 EA CYLINDER. GRADE 1
1 EA DOOR CLOSER, C02061,LOW RESISTANCE
1 EA THRESHOLD J32130

HW-2 1-1/2 PR HINGES
1 EA LOCKSET W/LEVERS. GRADE 1
1 EA DOOR CLOSER, C02061,LOW RESISTANCE

HW-4 1-1/2 PR HINGES
1 EA LOCKSET W/LEVERS. GRADE 1
1 EA STOP L02101 OR L02161

HW-6 1-1/2 PR HINGES
1 EA LOCKSET,F93 ENTRY LOCK W/LEVERS. GRADE 1
1 EA DOOR CLOSER, C02061,LOW RESISTANCE
1 EA THRESHOLD J32130

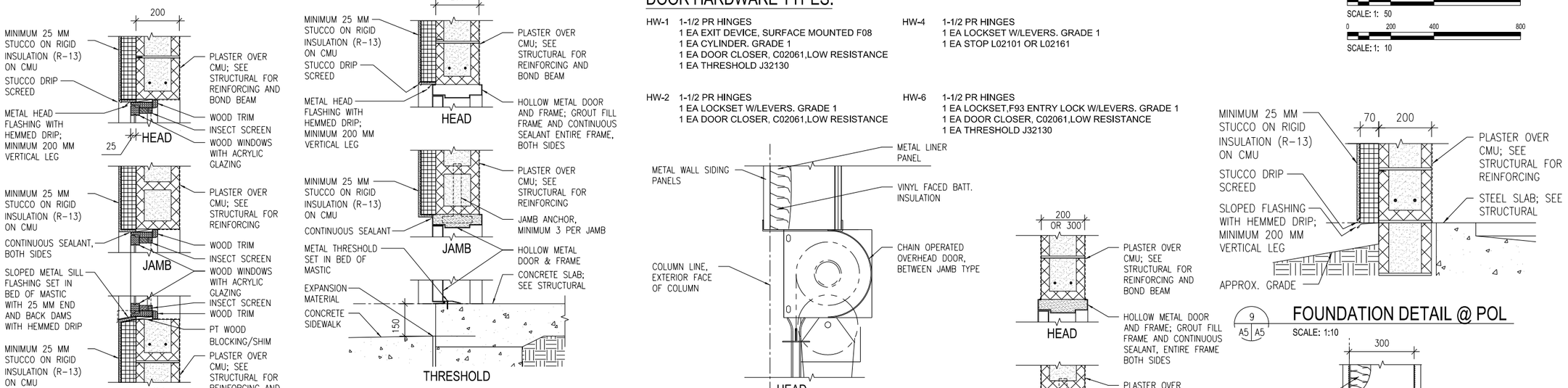

4 A5 A5 WINDOW DETAILS

SCALE: 1:10

5 A5 A5 EXTERIOR DOOR DETAILS

SCALE: 1:10

9 A5 A5 FOUNDATION DETAIL @ POL

SCALE: 1:10

10 A5 A5 THRESHOLD DETAIL @ POL

SCALE: 1:10

11 A5 A5 STUCCO DETAILS

SCALE: 1:10

6 A5 A5 OVERHEAD DOOR DETAILS

SCALE: 1:10

7 A5 A5 INTERIOR DOOR DETAILS

SCALE: 1:10

8 A4 A5 EXTERIOR STUCCO DETAILS

SCALE: 1:10

US Army Corps of Engineers
AFGHANISTAN ENGINEER DISTRICT

MARK	DESCRIPTION	DATE	APPR.	MARK	DESCRIPTION	DATE	APPR.

DESIGNED BY: | DATE: | SOLICITATION NO.: | CONTRACT NO.: | FILE NUMBER:
DWN BY: | CKD BY: | SUBMITTED BY:
PLOT SCALE: 1:1 | PLOT DATE: 11/23/2011 | FILE NAME: V M10_A-505.dgn
SIZE: ANSI D

U.S. ARMY CORPS OF ENGINEERS
AFGHANISTAN DISTRICT
APO AE 09356

STANDARD DESIGN
V10 - VEHICLE MAINTENANCE - 3 BAY

DOOR, WINDOW AND HARDWARE TYPES AND DETAILS

SHEET IDENTIFICATION
A5
SHEET 16 OF 26

P:\VM10_Vehicle Maintenance-3_Bay\VM10_A-505.dgn
11/23/2011 2:28:52 PM

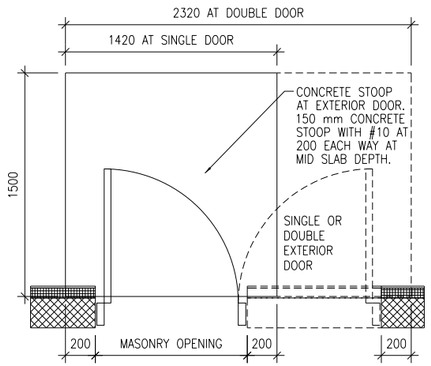

1 A6 A6 CONCRETE STOOP PLAN DETAIL

SCALE: 1:20

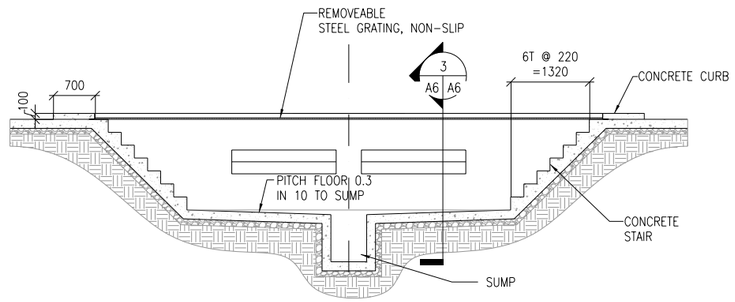

2 A6 A6 VEHICLE MAINTENANCE PIT SECTION

SCALE: 1:50

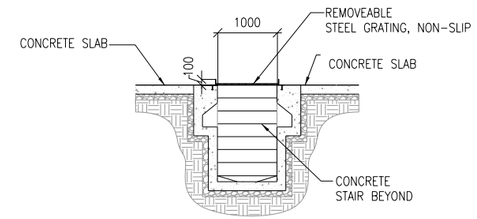

3 A6 A6 VEHICLE MAINTENANCE PIT SECTION

SCALE: 1:50

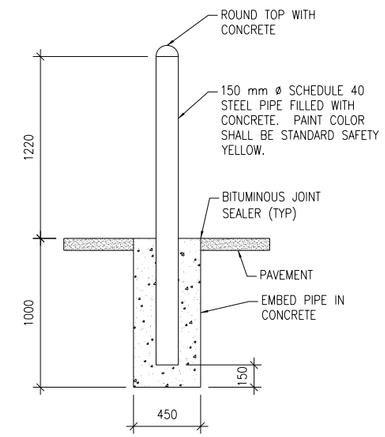

4 A6 A6 STEEL PIPE BOLLARD DETAIL

SCALE: 1:20

UNLESS OTHERWISE NOTED, LINEAR DIMENSIONS SHOWN ARE IN MILLIMETERS (mm)

0 400 800 1600

SCALE: 1: 20

0 1000 2000 4000

SCALE: 1: 50

US Army Corps of Engineers®
AFGHANISTAN ENGINEER DISTRICT

MARK	DESCRIPTION	DATE	APPR.	MARK	DESCRIPTION	DATE	APPR.

DESIGNED BY: | DATE:
DWN BY: | CKD BY: | SOLICITATION NO.:
SUBMITTED BY: | CONTRACT NO.:
PLOT SCALE: 1:1 | PLOT DATE: 11/23/2011 | FILE NUMBER:
SIZE: ANSI D | FILE NAME: VM10_A-506.dgn

U.S. ARMY CORPS OF ENGINEERS
AFGHANISTAN DISTRICT
APO AE 09356

STANDARD DESIGN
V10 - VEHICLE MAINTENANCE - 3 BAY

SECTION DETAILS

SHEET IDENTIFICATION
A6
SHEET 17 OF 26

P:\VM10_Vehicle Maintenance-3_Bay\VM10_A-506.dgn
11/23/2011 2:37:25 PM

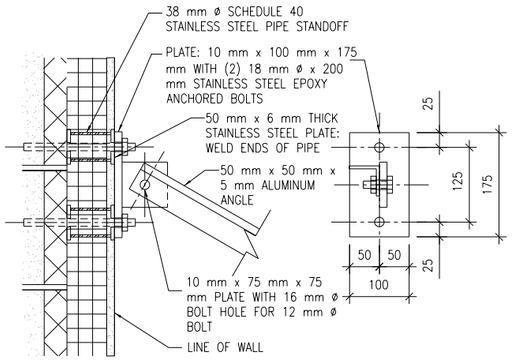

3 A7 A7 TOP CONNECTION DETAIL
SCALE: 1:5

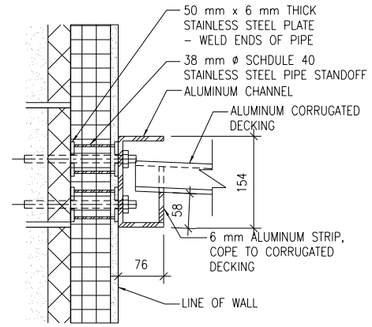

4 A7 A7 BOTTOM CONNECTION DETAIL
SCALE: 1:5

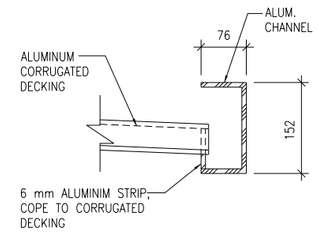

5 A7 A7 FRONT SECTION
SCALE: 1:5

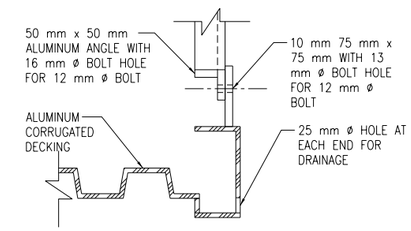

6 A7 A7 SIDE SECTION
SCALE: 1:5 1 AS SHOWN 1 OPP. HAND

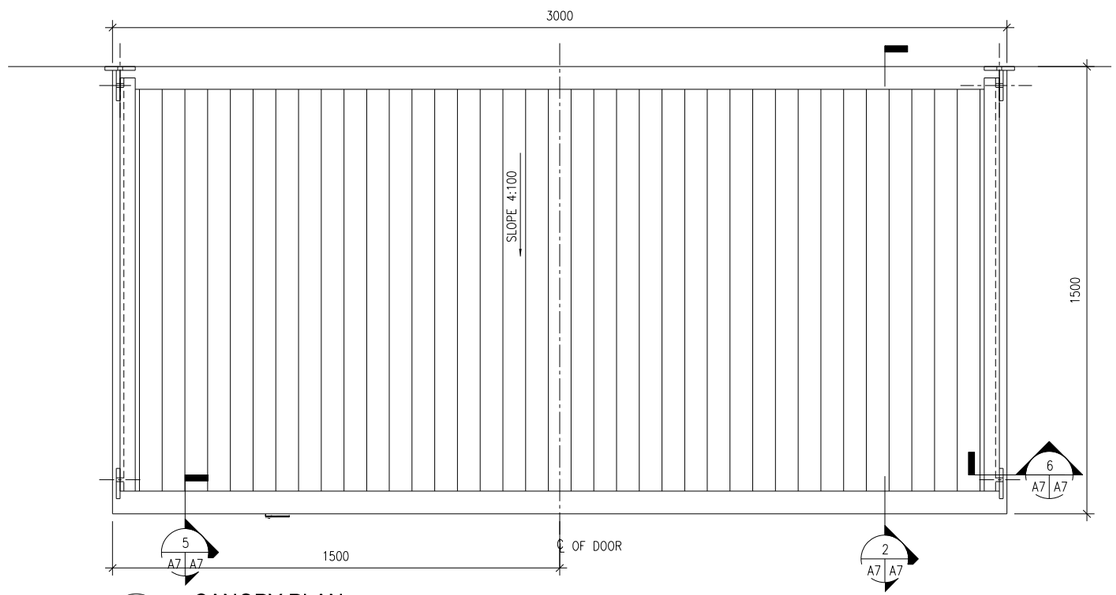

1 A1 A7 CANOPY PLAN
SCALE: 1:10

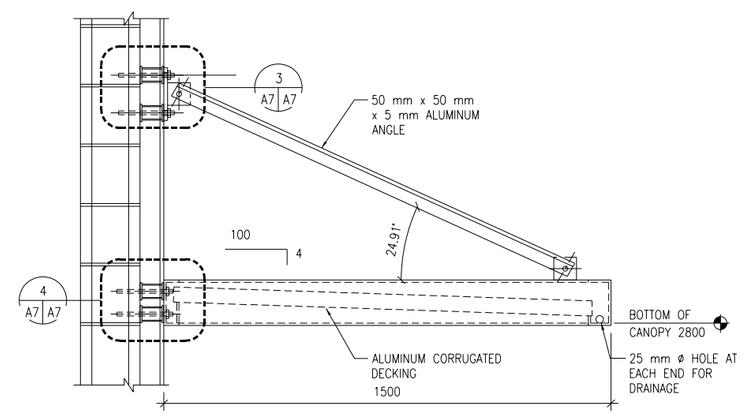

2 A7 A7 CANOPY SECTION
SCALE: 1:10

UNLESS OTHERWISE NOTED, LINEAR DIMENSIONS SHOWN ARE IN MILLIMETERS (mm)

0 100 200 400
SCALE: 1: 5

0 200 400 800
SCALE: 1: 10

US Army Corps of Engineers®
AFGHANISTAN ENGINEER DISTRICT

MARK	DESCRIPTION	DATE	APPR.	MARK	DESCRIPTION	DATE	APPR.

DESIGNED BY: DWN BY: CKD BY: SUBMITTED BY: DATE: SOLICITATION NO.: CONTRACT NO.: FILE NUMBER: PLOT SCALE: 1:1 PLOT DATE: COLOR TYPE: STYLES: SIZE: ANSI D FILE NAME:

U.S. ARMY CORPS OF ENGINEERS
AFGHANISTAN DISTRICT
APO AE 09356

STANDARD DESIGN
V10 - VEHICLE MAINTENANCE - 3 BAY

MISCELLANEOUS DETAILS

SHEET IDENTIFICATION
A7
SHEET 18 OF 26

$FILEL$ $TIME$
$DATE$

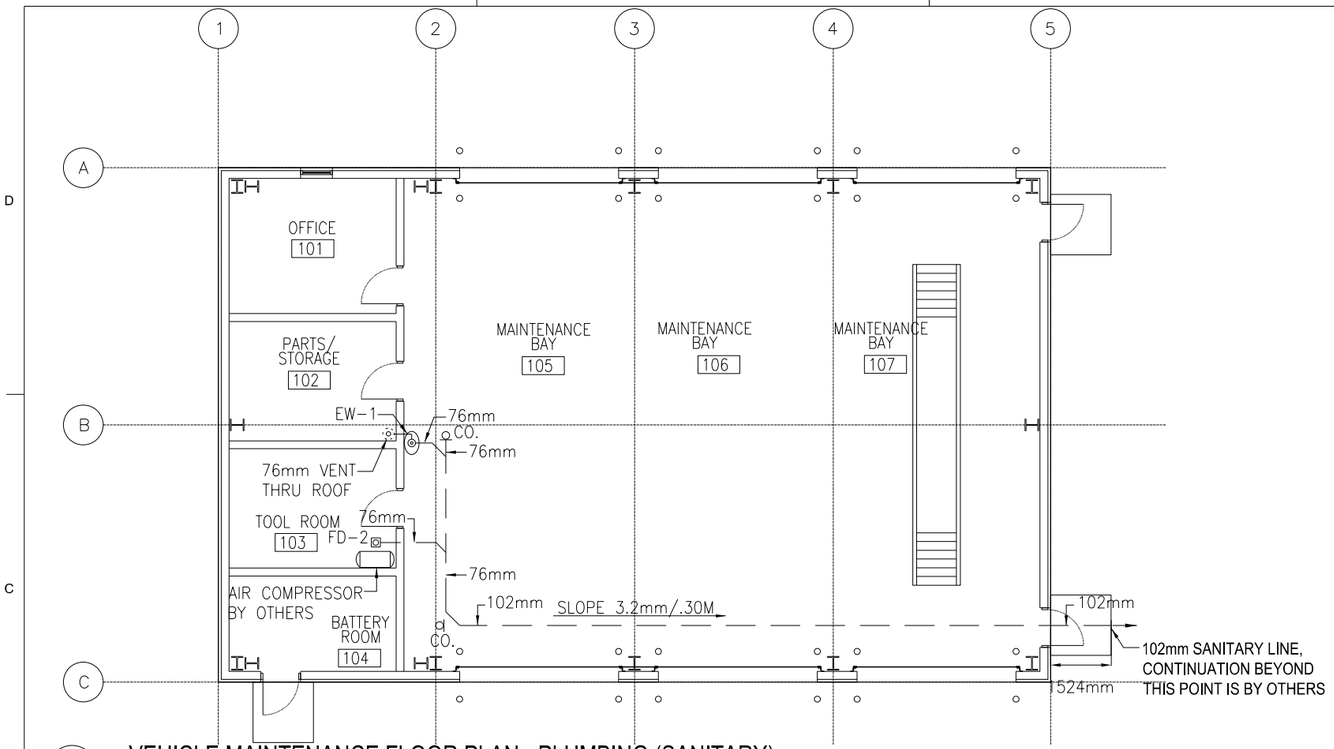

1 P1 P1 VEHICLE MAINTENANCE FLOOR PLAN - PLUMBING (SANITARY)

SCALE: 1:75

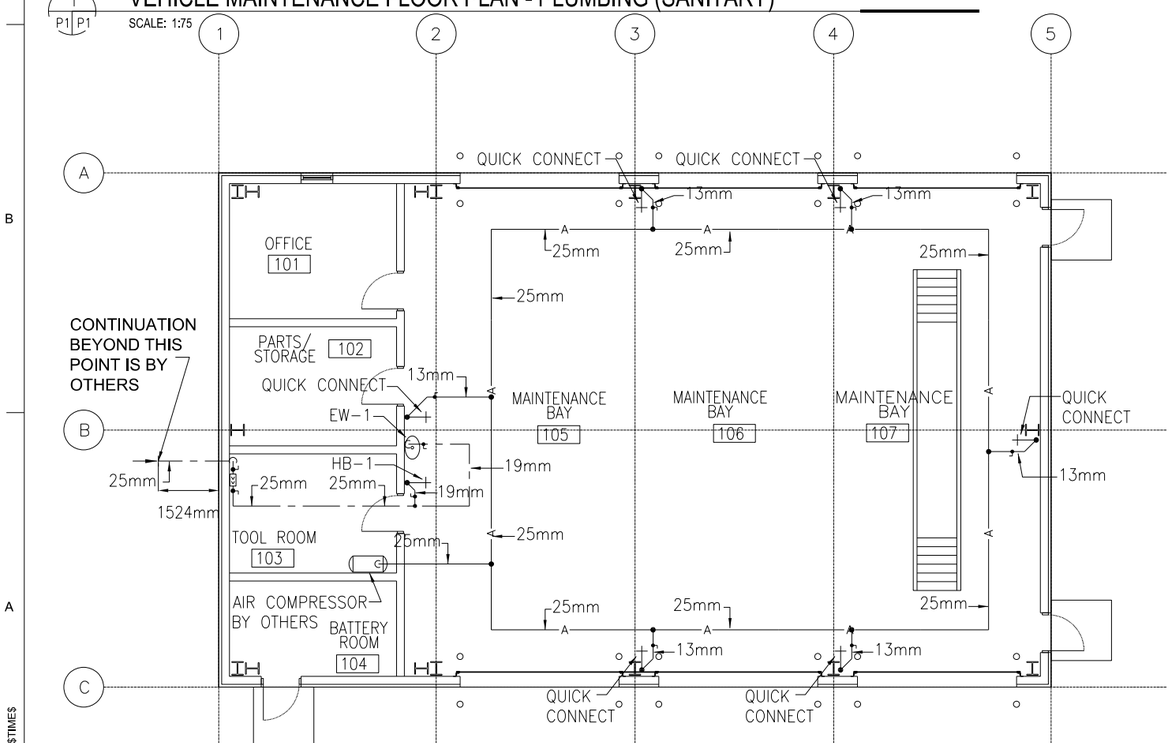

2 P1 P1 VEHICLE MAINTENANCE FLOOR PLAN - PLUMBING (WATER & AIR)

SCALE: 1:75

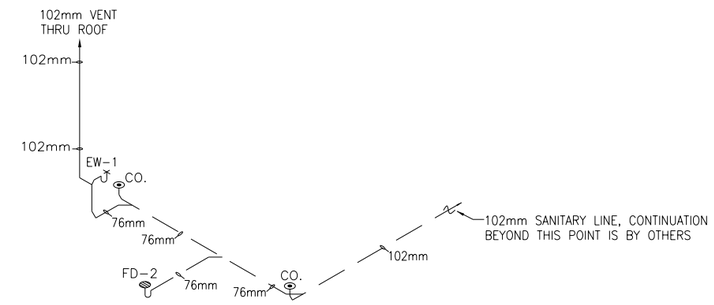

3 P1 P1 DRAINAGE ISOMETRIC

SCALE: NO SCALE

FLOOR PLAN NOTES:

1. DO NOT SCALE DRAWINGS - ALL DIMENSIONS AND CONDITIONS SHALL BE CHECKED AND VERIFIED BY THE CONTRACTOR AT THE SITE.
2. ALL WORK PERFORMED ON THIS BUILDING SHALL BE IN COMPLIANCE WITH ALL PERTINENT CODES, RULES, ORDINANCES AND REGULATIONS OF THE GOVERNING AUTHORITIES.
3. ALL WORK PERFORMED UNDER AND IN CONNECTION WITH THESE DRAWINGS AND SPECIFICATIONS SHALL BE IN STRICT COMPLIANCE WITH THE LATEST SAFETY AND HEALTH STANDARDS.
4. REPORT ANY DISCREPANCIES FOUND IN THE PLUMBING DRAWINGS AND/OR IN THE SPECIFICATIONS DURING THE BIDDING PROCESS FOR CLARIFICATION BY THE ENGINEER.
5. PLUMBING CONTRACTOR TO PROVIDE TRAP PRIMERS AND 1/2" (13mm) COLD WATER LINES FOR ALL FLOOR DRAINS. COLD WATER LINES TO BE UNDER THE FLOOR FROM TRAP PRIMERS TO TRAPS ON FLOOR DRAINS.
6. ALL WATER LINES TO BE EXPOSED. RUN LINES TIGHT TO CEILING AND WALL.

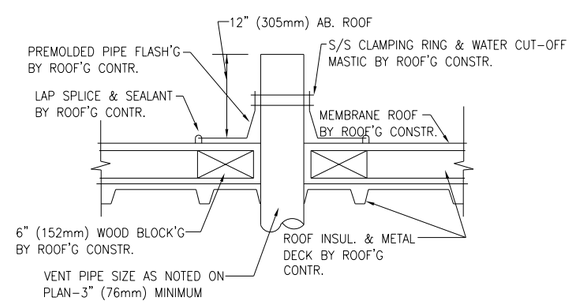

TYPICAL DETAIL – VENT THRU ROOF

NO SCALE

LEGEND

COLD WATER	
HOT WATER	
SANITARY ABOVE GROUND	
SANITARY UNDER GROUND	
VENT LINE	V

1 0 1 2 3 4 5 6 7 8 9

1:100

US Army Corps of Engineers®
AFGHANISTAN ENGINEER DISTRICT

MARK	DESCRIPTION	DATE	APPR.	MARK	DESCRIPTION	DATE	APPR.

DESIGNED BY: | DATE:
DWN BY: | CKD BY: | SOLICITATION NO.:
SUBMITTED BY: | CONTRACT NO.:
PLOT SCALE: 1:1 | PLOT DATE: | FILE NUMBER:
SIZE: ANSI D | FILE NAME: $FILE$

U.S. ARMY CORPS OF ENGINEERS
AFGHANISTAN DISTRICT
APO AE 09356

STANDARD DESIGN
V10 - VEHICLE MAINTENANCE - 3 BAY

FLOOR PLAN - PLUMBING
AND DRAINAGE ISOMETRIC

SHEET IDENTIFICATION
P1

$FILE$ $TIME$
$DATE$

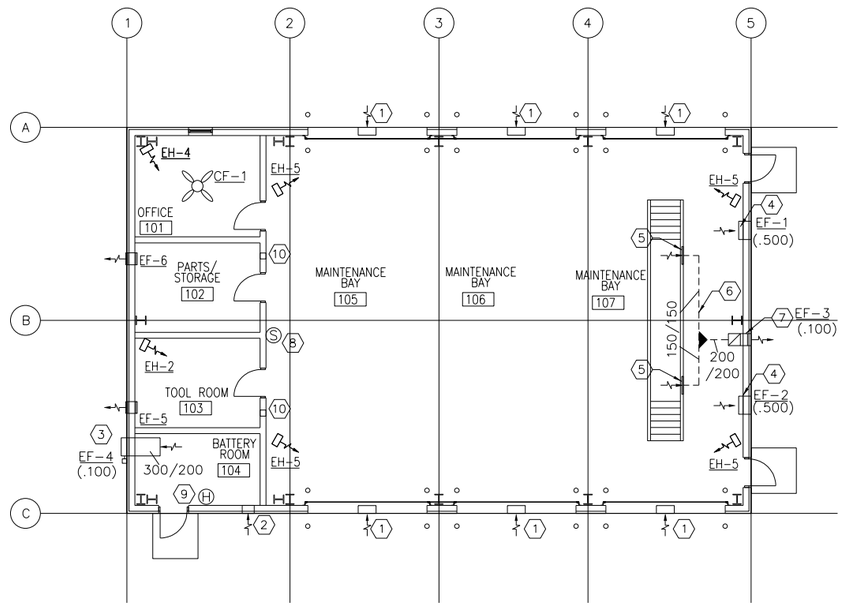

FLOOR HVAC PLAN

1 M1 M1

SCALE: 1:100

GENERAL NOTES:

1. DO NOT SCALE DRAWINGS - ALL DIMENSIONS AND CONDITIONS SHALL BE CHECKED AND VERIFIED BY THE CONTRACTOR AT THE SITE.
2. ALL WORK PERFORMED ON THIS BUILDING SHALL BE IN COMPLIANCE WITH ALL PERTINENT CODES, RULES, ORDINANCES AND REGULATIONS OF THE GOVERNING AUTHORITIES.
3. ALL WORK PERFORMED UNDER AND IN CONNECTION WITH THESE DRAWINGS AND SPECIFICATIONS SHALL BE IN STRICT COMPLIANCE WITH THE LATEST SAFETY AND HEALTH STANDARDS.

BATTERY ROOM FAN OPERATION:

THE BATTERY ROOM WILL BE PROVIDED WITH A DEDICATED EXHAUST FAN INTERLOCKED WITH A HYDROGEN SENSOR TO PROVE FAN IS OPERATING. AN ALARM SHALL SOUND WITH INCREASED HYDROGEN LEVELS AND THE CHARGERS SHALL BE SHUT DOWN. THE FAN SHALL BE INTERLOCKED WITH THE BATTERY CHARGER SO THAT THE CHARGER WILL NOT OPERATE WITHOUT VENTILATION. A WALL MOUNTED FAN SWITCH SHALL BE PROVIDED TO CONTROL THE FAN. FAN MOTORS WILL BE INSTALLED OUTSIDE THE BATTERY ROOM. THE BLOWER WILL HAVE A NON-SPARKING FAN AND THE MOTOR SHALL BE OUT OF THE AIR STREAM.

FAN SCHEDULE

NO.	TYPE	FAN CMS	DRIVE	HP	SP mmH20	ELECT. CHAR.	SWITCH
EF-1	WALL	0.500	DIRECT	1/4	20	220/1/50	@ WALL
EF-2	WALL	0.500	DIRECT	1/4	20	220/1/50	@ WALL
EF-3	WALL	0.100	DIRECT	1/30	25	220/1/50	@ WALL
EF-4	WALL	0.100	DIRECT	1/30	13	220/1/50	@ PANEL
EF-5	WALL	0.050	DIRECT	FRACT	13	220/1/50	@ WALL
EF-6	WALL	0.050	DIRECT	FRACT	13	220/1/50	@ WALL

ELECTRIC UNIT HEATER SCHEDULE

NO.	CMS	KW	F.A.T. °C	ELECT. CHAR.	MOUNTING
EH-2	.200	2.6	38	370/1/50	WALL HUNG
EH-4	.200	4	38	370/1/50	WALL HUNG
EH-5	.200	5	38	370/1/50	WALL HUNG

NOTES:

1. ALL HEATERS SHALL BE CORROSION RESISTANT
2. UNIT HEATERS SHALL HAVE TAMPER PROOF INTEGRAL STATS.
3. UNIT HEATERS SHALL BE MOUNTED AS HIGH AS POSSIBLE.

○ CEILING FAN

NO.	BLADE SIZE mm	BLADE SIZE IN	VOLTAGE	SWITCH
CF-1	1320	52	220/1/50	@ WALL

NOTE:

1. FINAL ELECTRICAL CONNECTIONS BY EC.

SYMBOLS:

- (X) KEY NOTE
- (.050) AIR VOLUME IN CUBIC METERS PER SECOND (CMS)
- ¬ VOLUME DAMPER
- FD FIRE DAMPER
- (X) SENSOR

NUMBERED NOTE:

1. 600X400 (24X16) LOW LEAKAGE GRAVITY WALL LOUVER FOR INTAKE. PROVIDE WEATHER PROOF LOUVER W/ 50mm (2") WASH DOWN FILTER AND SAND TRAP.
2. 400X200 (16X8) LOW LEAKAGE GRAVITY WALL LOUVER FOR INTAKE. PROVIDE WEATHER PROOF LOUVER W/ 50mm (2") WASH DOWN FILTER AND SAND TRAP.
3. WALL EXHAUST FAN MOUNTED AS HIGH AS POSSIBLE, EXTEND DUCT INTO BATTERY ROOM WITH END OPEN. FAN MOTOR SHALL BE OUT OF THE AIR STREAM. FAN TO BE EXPLOSION PROOF.
4. WALL EXHAUST FAN MOUNTED AS HIGH AS POSSIBLE, EXTEND DUCT DOWN TO 150mm ABOVE FLOOR. PROVIDE 2 300X300 (12X12) GRILLES ONE LOCATED 300 (12") AFF AND THE OTHER AT 300 (12") BELOW CEILING. SEE DETAIL THIS SHEET.
5. 300X300 (12X12) WALL EXHAUST GRILLE LOCATED 300mm (12") AFF OF PIT.
6. EXTEND DUCT UNDERGROUND OVER TO WALL AND UP TO EXHAUST FAN.
7. EXHAUST FAN WITH DUCT DOWN BELOW FLOOR TO PIT AS SHOWN.
8. COMBINATION NITROGEN DIOXIDE / CARBON MONOXIDE SENSOR INTERLOCKED WITH EF-1 & EF-2 TO TURN FANS ON WITH INCREASED LEVELS AS SPECIFIED.
9. HYDROGEN SENSOR INTERLOCKED W/ EF-4 MOUNTED AT CEILING.
10. 200X200 (8X8) TRANSFER GRILLE.

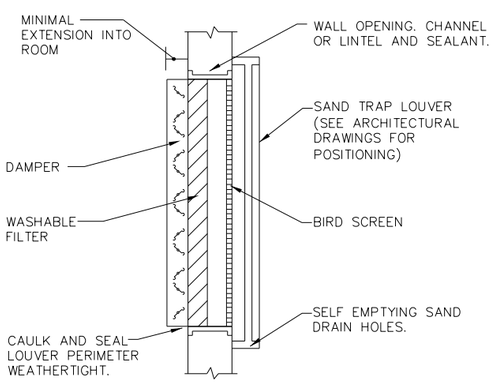

FILTERED SAND TRAP LOUVER

N.T.S.

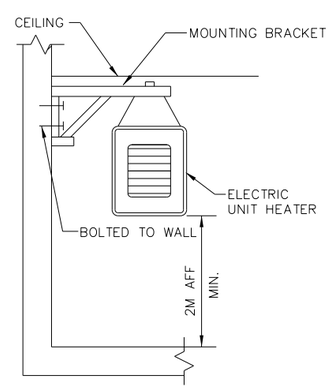

ELECTRIC UNIT HEATER MOUNTING

N.T.S.

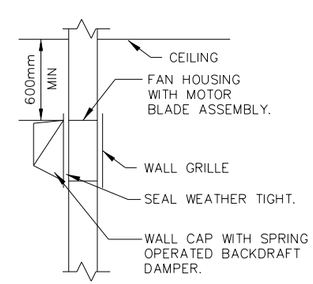

WALL MOUNTED EXHAUST FAN DETAIL

N.T.S.

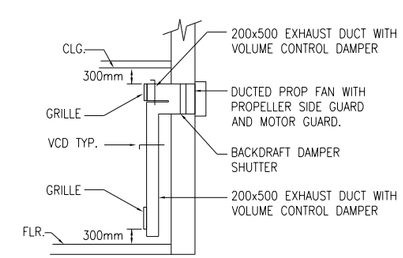

TYPICAL FAN HIGH LOW GRILLE DETAIL

N.T.S.

US Army Corps of Engineers
AFGHANISTAN ENGINEER DISTRICT

MARK	DESCRIPTION	DATE	APPR.	MARK	DESCRIPTION	DATE	APPR.

DESIGNED BY: DATE:
DWN BY: CKD BY: SOLICITATION NO.:
SUBMITTED BY: CONTRACT NO.:
PLOT SCALE: 1:1 PLOT DATE: FILE NUMBER:
SIZE: ANSI D FILE NAME: $FILE$

U.S. ARMY CORPS OF ENGINEERS
AFGHANISTAN DISTRICT
APO AE 09356

STANDARD DESIGN
V10 - VEHICLE MAINTENANCE - 3 BAY

HVAC FLOOR PLAN

SHEET IDENTIFICATION
M1
SHEET 20 OF 26

$FILE$ $TIME$
$DATE$

POWER

- DISTRIBUTION PANELBOARD
- NEW PANELBOARD – SURFACE
- NEW PANELBOARD – RECESSED
- EXISTING PANELBOARD
- GENERATOR
- TVSS – TRANSIENT VOLTAGE SURGE SURPRESSOR
- TRANSFORMER (DRAWN TO SIZE)
- PS – POWER SUPPLY
- CP – CONTROL PANEL
- TC – TIME CLOCK
- TIM – ASTRONOMICAL TIME CLOCK– "SEE SPEC."
- R – RELAY WITH RATING AND NUMBER OF POLES AS NOTED ON DRAWINGS– "SEE SPEC."
- J – JUNCTION BOX
- J – JUNCTION BOX – CEILING
- PB – PULL BOX
- BD – BUS DUCT HORIZONTAL
- BUS DUCT VERTICAL
- EMERGENCY POWER OFF PUSH BUTTON
- NON–FUSIBLE SAFETY SWITCH
- FUSIBLE SAFETY SWITCH
- M – MOTOR
- $M – MOTOR STARTING SWITCH – 20A RATED
- $K – KEY SWITCH – 20A RATED
- FC – FAN COIL – FURNISHED BY MECHANICAL CONTRACTOR, ELECTRICAL CONTRACTOR SHALL INSTALL AND PROVIDE POWER CONNECTION
- UH – UNIT HEATER – FURNISHED BY MECHANICAL CONTRACTOR, ELECTRICAL CONTRACTOR SHALL INSTALL AND PROVIDE POWER CONNECTION
- D – JUNCTION BOX FOR CONNECTION TO GARBAGE DISPOSAL
- CF – LIGHT/HEATER/FAN – FURNISHED BY MECHANICAL CONTRACTOR, ELECTRICAL CONTRACTOR SHALL INSTALL AND PROVIDE POWER CONNECTION
- ELECTRIC WATER HEATER
- EPO – WEATHERPROOF / EXPLOSION PROOF EMERGENCY POWER OFF PUSH–BUTTON TO BE INTERCONNECTED WITH GENERATOR SHUT DOWN CONTROL
- CEILING FAN – REFER TO SPECIFICATION SECTION 26 20 00

RECEPTACLES

- DUPLEX 20A BRITISH STANDARD UNSWITCHED SOCKETS
- GF – DUPLEX 20A BRITISH STANDARD UNSWITCHED SOCKETS – 10mA GROUND FAULT INTERRUPTER TYPE
- WP – DUPLEX 20A BRITISH STANDARD UNSWITCHED SOCKETS – 10mA GROUND FAULT INTERRUPTER TYPE WITH WEATHERPROOF COVER
- EXP – DUPLEX 20A BRITISH STANDARD UNSWITCHED SOCKETS – EXPLOSION PROOF
- * – INDICATES MOUNT DEVICE ABOVE COUNTER TOP

LIGHTNING PROTECTION

- AIR TERMINAL 20mm O.D. X 4m SOLID COPPER, NICKEL PLATED ON ADHESIVE BASE.
- EQ – EQUIPMENT AIR TERMINAL
- TEST WELL WITH GROUND ROD(S)
- GROUND ROD
- G – GROUND PLATE
- G – MAIN GROUND CONDUCTER CONCEALED WITHIN CONSTRUCTION
- G – MAIN GROUND CONDUCTOR EXPOSED ON EXPOSED ON BUILDING EXTERIOR SURFACE
- G – GROUND CONDUCTOR CAD WELDED TO GROUND CABLE OR EQUIPMENT
- G – GROUND CONDUCTOR CAD WELDED TO BUILDING STEEL COLUMN
- G – GROUND ROD TRIPOD, SPACED 10 FEET APART.
- LEVEL TO LEVEL CABLE

LIGHTING

- LIGHTING FIXTURE – SEE FIXTURE SCHEDULE FOR MORE INFORMATION
- LIGHTING FIXTURE – SEE FIXTURE SCHEDULE FOR MORE INFORMATION
- DOWNLIGHT
- LIGHTING FIXTURE ON NORMAL/EMERGENCY
- WALL MOUNTED LIGHT FIXTURE
- E – EXIT SIGN – DIRECTIONAL ARROWS AS INDICATED ON DRAWINGS
- B – BATTERY PACK WITH HEADS AS INDICATED ON DRAWINGS
- REMOTE HEAD FOR BATTERY PACK
- $ – SINGLE POLE SWITCH – 20A RATED
- $3 – 3–WAY SWITCH – 20A RATED
- $4 – 4–WAY SWITCH – 20A RATED
- PC – PHOTOCELL VOLTAGE TO MATCH CIRCUITRY
- LC – LIGHTING CONTACTOR
- POLE MOUNTED SITE LIGHTING FIXTURE– NUMBER OF FIXTURES PER POLE AS INDICATED ON DRAWINGS
- EXTERIOR DIRECTIONAL LIGHTING FIXTURE
- SMALL CASE LETTERS REPRESENTS LAMP(S) / SWITCHES. WHEN USED WITH AN OCCUPANCY SENSOR THIS INDICATES SENSOR WITH MANUAL OVERRIDE SWITCH

TELECOMMUNICATIONS

- TELEPHONE OUTLET(S) @ 18" AFF. U.N.O. WITH 3/4" RACEWAY TERMINATED ABOVE NEAREST ACCESSIBLE CEILING OR TO TELEPHONE TERMINAL BOARD IF NO ACCESSIBLE CEILING AVAILABLE. SEE TELE/DATA RISER DIAGRAM FOR OUTLET AND CABLE DESCRIPTION
- DATA OUTLET(S) @ 18" AFF. U.N.O. WITH 3/4" RACEWAY TERMINATED ABOVE NEAREST ACCESSIBLE CEILING OR TO DATA EQUIPMENT RACK IF NO ACCESSIBLE CEILING AVAILABLE. SEE TELE/DATA RISER DIAGRAM FOR OUTLET AND CABLE DESCRIPTION

TELECOMMUNICATIONS (CONTINUED)

- COMBINATION TELEPHONE/DATA OUTLET(S) @ 18" AFF. U.N.O. WITH 1" RACEWAY TERMINATED ABOVE NEAREST ACCESSIBLE CEILING OR TO TELE/DATA TERMINAL AREA IF NO ACCESSIBLE CEILING AVAILABLE. SEE TELE/DATA RISER DIAGRAM FOR OUTLET AND CABLE DESCRIPTION
- W – WALL MTD. TELEPHONE OUTLET WITH 3/4" RACEWAY TERMINATED ABOVE NEAREST ACCESSIBLE CEILING OR TO TELEPHONE TERMINAL BOARD IF NO ACCESSIBLE CEILING AVAILABLE. SEE TELE/DATA RISER DIAGRAM FOR OUTLET AND CABLE DESCRIPTION
- (x)T – INDICATES NUMBER OF TELEPHONE OUTLET(S) AND ASSOCIATED CABLING
- (x)D – INDICATES NUMBER OF DATA OUTLET(S) AND ASSOCIATED CABLING
- (x)TF – INDICATES NUMBER OF TELEPHONE OUTLETS AND ASSOCIATED CABLING WITH 1 OUTLET AND CABLE DEDICATED FOR FAX

SINGLE LINE SYMBOLS

- SWITCH
- BREAKER
- FUSE
- TRANSFORMER
- CAPACITOR
- GROUND
- CONTACT (NORMALLY OPEN)
- CONTACT (NORMALLY CLOSED)
- AUTOMATIC TRANSFER SWITCH
- MANUAL DOUBLE THROW SWITCH
- CURRENT TRANSFORMER
- INDICATES NEW ELECTRICAL EQUIPMENT
- C – INDICATES NEW CONTROL WIRING AND CONDUIT
- EQUIPMENT OUTLINE

MISCELLANEOUS

- BRANCH CIRCUIT WIRING CONCEALED ABOVE CEILINGS, SURFACE MOUNTED ON WALLS
- BRANCH CIRCUIT WIRING – #10 AWG
- BRANCH CIRCUIT WIRING – UNDER FLOOR
- HOME RUN BACK TO PANEL
- CONDUIT TURNED DOWN
- CONDUIT TURNED UP
- LV – LOW VOLTAGE WIRING AND CONDUIT
- CT–x – CABLE TRAY ("X" DENOTES WIDTH)
- INDICATES CONTINUATION OF LINE

FIRE ALARM

- FACP – FIRE ALARM CONTROL PANEL WITH BATTERY BACKUP
- F – FIRE ALARM PULL STATION

FIRE ALARM (CONTINUED)

- F – FIRE ALARM STROBE – WALL MOUNTED
- F – FIRE ALARM AUDIBLE/STROBE – WM
- F – FIRE ALARM HORN/STROBE – WM
- S – SMOKE DETECTOR
- H – HEAT DETECTOR CEILING MOUNTED
- D – DUCT DETECTOR – PROVIDED BY EC, INSTALLED BY MC AND CONNECTED BY EC

DENOTATIONS & ABBREVIATIONS

AFF	ABOVE FINISHED FLOOR
C	CEILING MOUNTED
E	EMERGENCY
EC	ELECTRICAL CONTRACTOR
EPO	EMERGENCY POWER OFF
EXP	EXPLOSION PROOF
F	FIRE ALARM
FF	FLUSH FLOOR MOUNTED
FL	FLUORESCENT
FO	FIBER OPTIC
FSS	FUSED SAFETY SWITCH
G	GROUND FAULT INTERRUPTER
GC	GENERAL CONTRACTOR
HOA	HAND–OFF AUTO
I	INFRARED
ICD	INCANDESCENT
IG	ISOLATED GROUND
K	KEY
LV	LOW VOLTAGE
M	MOTOR
MC	MECHANICAL CONTRACTOR
NE	NORMAL/EMERGENCY
NFSS	NON–FUSED SAFETY SWITCH
PA	PAGING SYSTEM
PLC	PLUMBING CONTRACTOR
REL	RELOCATE
RED	RELOCATED
SL	SINGLE LINE
SS	SURGE SUPPRESSION
T	TELEPHONE
TL	TWIST LOCK

DENOTATIONS & ABBREVIATIONS (CONT.)

TP	TAMPER PROOF
UE	UNDERGROUND ELECTRIC
UF	UNDERGROUND FIBER
UT	UNDERGROUND TELEPHONE
W	WALL MOUNTED
WG	WIRE GUARD
WP	WEATHERPROOF
WPG	WEATHERPROOF/GROUND FAULT INTERRUPTER
WT	WATER TIGHT

GENERAL PROJECT NOTES:

G1. UNLESS OTHERWISE NOTED, PROVIDE ALL EQUIPMENT SHOWN ON THE PLANS. THE ELECTRICAL CONTRACTOR SHALL COORDINATE ALL SYMBOLS SHOWN ON THE PLANS WITH THE SYMBOL LIST. IT SHALL BE THE RESPONSIBILITY OF THE CONTRACTOR TO VERIFY THE INTENT OF ANY SYMBOL THAT IS SHOWN ON THE PLANS AND NOT INDICATED ON THE SYMBOL LIST WITH THE ENGINEER PRIOR TO BID.

G2. COORDINATE THE FINAL LOCATIONS OF ALL LIGHT FIXTURES WITH THE ARCHITECT'S REFLECTED CEILING PLANS. REPORT ANY DISCREPANCIES TO THE ARCHITECT PRIOR TO INSTALLATION.

G3. THE CONTRACTOR SHALL VERIFY THE LOCATION OF ALL UNDERGROUND UTILITIES WITHIN THE CONSTRUCTION AREA THREE (3) WORKING DAYS NOTICE BEFORE COMMENCE DIGGING. NOTIFY THE LOCAL OR STATE AUTHORITY HAVING JURISDICTION AND WAIT THE REQUIRED TIME BEFORE COMMENCING TO DIG.

G4. THE CONTRACTOR SHALL COORDINATE CONDUIT RUNS, CABLE TRAY, LIGHTING FIXTURES AND OTHER EQUIPMENT LOCATIONS WITH THE OTHER TRADE CONTRACTORS TO AVOID CONFLICTS.

G5. WHERE VOLTAGES AND FREQUENCIES ON THE DRAWINGS AND IN THE SPECIFICATIONS DIFFER FROM THE LOCAL ONES, ALL WORK SHALL BE PERFORMED USING THE LOCAL VOLTAGES AND FREQUENCIES.

G6. THE MINIMUM WIRE SIZE ON THE PROJECT SHALL BE 4mm2. THE MINIMUM CONDUIT SIZE SHALL BE 20mm. THE MINIMUM BREAKER SIZE SHALL BE 20 AMPS.

G7. THE CONTRACTOR SHALL PUT A MAXIMUM OF 6 DUPLEX SOCKETS ON A 20A SINGLE POLE CIRCUIT.

G8. WHERE THE 1010 SCOPE REVIEW, 1015 TECHNICAL REVIEW, DRAWINGS, AND SPECIFICATIONS DIFFER FROM AMERICAN CODES OR STANDARDS THE 1010, 1015, DRAWINGS, AND SPECIFICATIONS SHALL RULE.

G9. WORK FOR THE AMMUNITION SUPPLY POINT SHALL BE DONE IN ACCORDANCE WITH DEPARTMENT OF DEFENSE STANDARD DOD 6055.9–STD.

G10. ALL CONDUIT AND DEVICES SHALL BE SURFACE MOUNTED UNLESS OTHERWISE INDICATED.

US Army Corps of Engineers
AFGHANISTAN ENGINEER DISTRICT

MARK	DESCRIPTION	DATE	APPR.	MARK	DESCRIPTION	DATE	APPR.

DESIGNED BY: | DATE: | DWN BY: | CKD BY: | SOLICITATION NO.: | SUBMITTED BY: | CONTRACT NO.: | PLOT SCALE: 1:1 | PLOT DATE: 11/22/2011 | FILE NUMBER: | SIZE: ANSI D | FILE NAME: VM10_E-000.dgn

U.S. ARMY CORPS OF ENGINEERS
AFGHANISTAN DISTRICT
APO AE 09356

STANDARD DESIGN
V10 - VEHICLE MAINTENANCE - 3 BAY

ELECTRICAL SYMBOLS AND ABBREVIATIONS

SHEET IDENTIFICATION
E0
SHEET 21 OF 26

P:\VM10_Vehicle Maintenance-3_Bay\VM10_E-000.dgn
11/22/2011 3:55:30 PM

GENERAL NOTES:

1. REFER TO DRAWING #E0 FOR THE ELECTRICAL SYMBOLS LIST.
2. EXIT SIGNS SHALL BE WIRED AHEAD OF ANY LOCAL SWITCHING ON CIRCUITS.
3. REFER TO DRAWING #E4 FOR THE LIGHTING FIXTURE SCHEDULE.
4. REFER TO DRAWING #E3 FOR THE POWER RISER.
5. REFER TO DRAWING #E5 FOR PANEL SCHEDULES.
6. LIGHT FIXTURES INDICATED AS EMERGENCY SHALL BE PROVIDED WITH A BATTERY BACKUP BALLAST.

NUMBERED NOTES:

1. ALL WORK IN MAINTENANCE PIT SHALL BE IN ACCORDANCE WITH NEC ARTICLE 511. EXPLOSION PROOF EQUIPMENT SHALL BE USED FOR ALL FIXTURES AND DEVICES. PROVIDE CONDUIT SEALS WHERE REQUIRED. ALL WIRING SHALL BE IN ACCORDANCE WITH NEC ARTICLE 501. FOR CLASS I LOCATIONS.
2. FIXTURE SHALL BE MOUNTED TO WALL OF MAINTENANCE PIT.

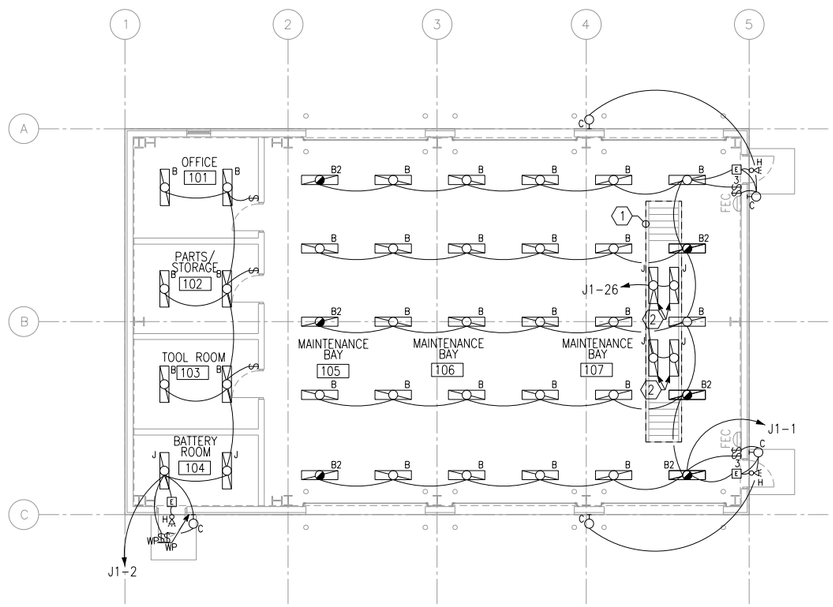

1 E1 E1 LIGHTING PLAN (VEHICLE MAINTENANCE)

SCALE: 1:100

N

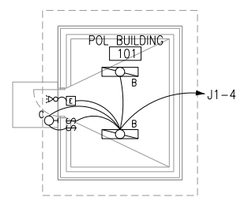

2 E1 E1 LIGHTING PLAN (POL BUILDING)

SCALE: 1:100

N

UNLESS OTHERWISE NOTED, LINEAR DIMENSIONS SHOWN ARE IN MILLIMETERS (mm)

1 0 1 2 3 4 5 6 7 8 9

1:100

E1

LIGHTING PLANS

US Army Corps of Engineers®
AFGHANISTAN ENGINEER DISTRICT

MARK	DESCRIPTION	DATE	APPR.	MARK	DESCRIPTION	DATE	APPR.

U.S. ARMY CORPS OF ENGINEERS
AFGHANISTAN DISTRICT
APO AE 09356

DESIGNED BY: | DATE:
DWN BY: | CKD BY: | SOLICITATION NO.:
SUBMITTED BY: | CONTRACT NO.:
PLOT SCALE: 1:1 | PLOT DATE: | FILE NUMBER:
SIZE: ANSI D | FILE NAME: VM10_E-101.dgn

STANDARD DESIGN
V10 - VEHICLE MAINTENANCE - 3 BAY

LIGHTING PLANS

SHEET IDENTIFICATION
E1
SHEET 22 OF 26

P:\VM10_Vehicle Maintenance-3_Bay\VM10_E-101.dgn
11/22/2014 14:16:06 PM

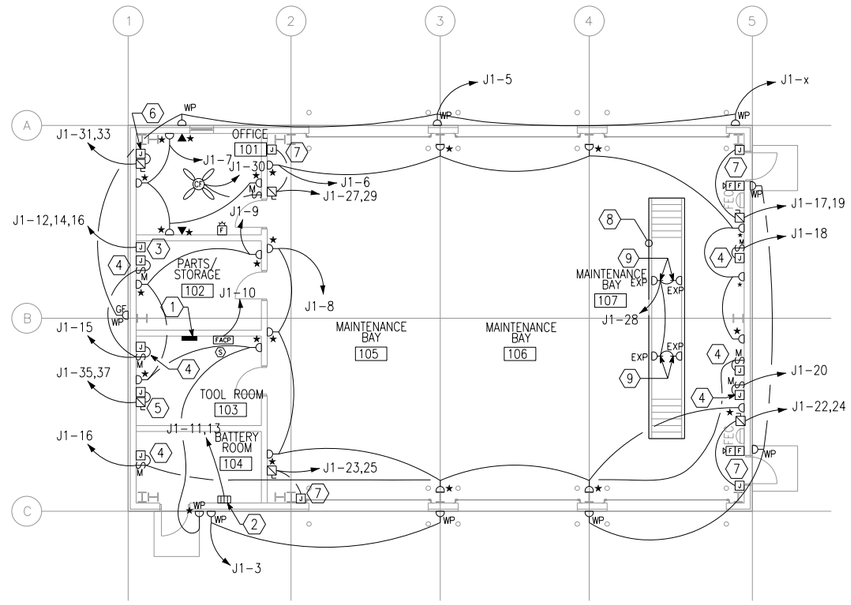

1 E2 E2 POWER AND SYSTEMS PLAN (VEHICLE MAINTENANCE)

SCALE: 1:100

N

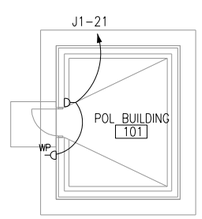

3 E2 E2 POWER AND SYSTEMS PLAN (POL BUILDING)

SCALE: 1:100

N

GENERAL NOTES:

1. REFER TO DRAWING #E0 FOR THE ELECTRICAL SYMBOLS LIST.
2. REFER TO DRAWING #E3 FOR THE POWER RISER.
3. REFER TO DRAWING #E5 FOR PANEL SCHEDULES.
4. COORDINATE EXACT MOUNTING LOCATION OF DISCONNECTING MEANS FOR MECHANICAL AND PLUMBING EQUIPMENT IN THE FIELD.
5. FUSIBLE SAFETY SWITCHES THAT ARE NOT OTHERWISE IDENTIFIED SHALL BE 380V, 1P, 30A FUSED SAFETY SWITCHES WITH 20A FUSES.

NUMBERED NOTE:

1. PANEL J1.
2. BATTERY CHARGER
3. PROVIDE ELECTRICAL CONNECTION TO AIR COMPRESSOR (BY OTHERS). COORDINATE ELECTRICAL CONNECTION WITH MODEL PURCHASED PRIOR TO ROUGH IN OF ELECTRICAL EQUIPMENT.
4. PROVIDE POWER CONNECTION TO EXHAUST FANS. SEE DRAWINGS #M1 AND #E5 FOR MORE INFORMATION.
5. PROVIDE POWER CONNECTION TO ELECTRIC HEATER #2. SEE DRAWINGS #M1 AND #E5 FOR MORE INFORMATION.
6. PROVIDE POWER CONNECTION TO ELECTRIC HEATER #4. SEE DRAWINGS #M1 AND #E5 FOR MORE INFORMATION.
7. PROVIDE POWER CONNECTION TO ELECTRIC HEATER #5. SEE DRAWINGS #M1 AND #E5 FOR MORE INFORMATION.
8. ALL WORK DONE IN THE MAINTENANCE PIT SHALL BE IN ACCORDANCE WITH NEC ARTICLE 511. EXPLOSION PROOF EQUIPMENT SHALL BE USED FOR A FIXTURES AND DEVICES. PROVIDE CONDUIT SEALS WHERE REQUIRED. ALL WIRING SHALL BE IN ACCORDANCE WITH NEC ARTICLE 501. FOR CLASS I LOCATIONS.
9. RECEPTACLE SHALL BE MOUNTED TO WALL OF MAINTENANCE PIT AT 1070mm ABOVE FINISHED FLOOR OF MAINTENANCE PIT.

UNLESS OTHERWISE NOTED, LINEAR DIMENSIONS SHOWN ARE IN MILLIMETERS (mm)

1 0 1 2 3 4 5 6 7 8 9

1:100

US Army Corps of Engineers®
AFGHANISTAN ENGINEER DISTRICT

MARK	DESCRIPTION	DATE	APPR.	MARK	DESCRIPTION	DATE	APPR.

DESIGNED BY: | DATE:
DWN BY: | CKD BY: | SOLICITATION NO.:
SUBMITTED BY: | CONTRACT NO.:
PLOT SCALE: 1:1 | PLOT DATE: 11/22/2011 | FILE NUMBER:
SIZE: ANSI D | FILE NAME: V4710_E-102.dgn

U.S. ARMY CORPS OF ENGINEERS
AFGHANISTAN DISTRICT
APO AE 09356

STANDARD DESIGN
V10 - VEHICLE MAINTENANCE - 3 BAY

POWER AND SYSTEMS PLAN

SHEET IDENTIFICATION
E2
SHEET 23 OF 26

P:\V4710_Vehicle Maintenance-3_Bay\V4710_E-102.dgn
11/22/2011 14:59:35 PM

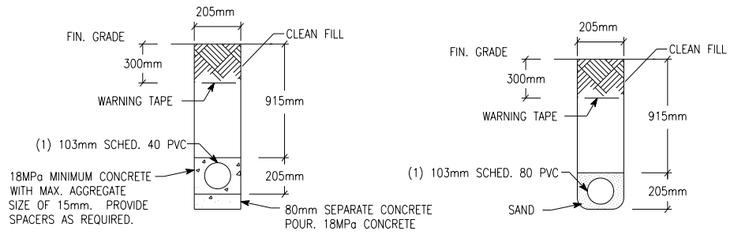

NOTE: PVC CONDUIT SHALL BE DIRECT BURIED SCHEDULE 80 FOR NO TRAFFIC AREAS AND CONCRETE-ENCASED SCHEDULE 40 FOR UNDER ROADWAYS OR TRAFFIC AREAS.

1 / E3 E3 TYPICAL DUCT BANK DETAILS FOR CONDUIT IN SAND OR CONCRETE

SCALE: N.T.S.

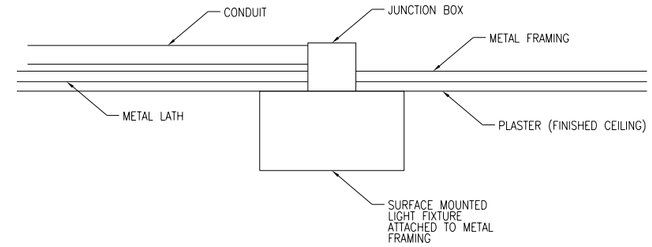

2 / E3 E3 TYPICAL DETAIL FOR SURFACE MOUNTED LIGHT FIXTURES

SCALE: N.T.S.

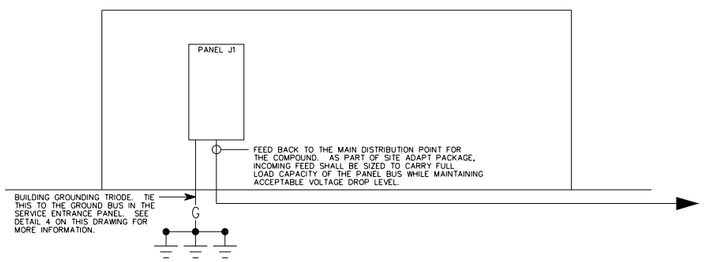

3 / E3 E3 VEHICLE/POL RISER DIAGRAM

SCALE: N.T.S.

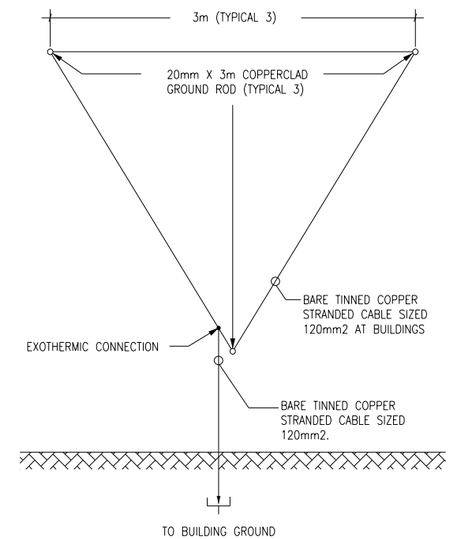

4 / E3 E3 GROUND TRIPOD SYSTEM DETAIL - PLAN

SCALE: N.T.S.

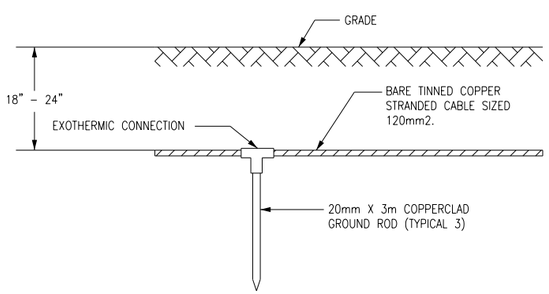

5 / E3 E3 GROUND TRIPOD SYSTEM DETAIL - ELEVATION

SCALE: N.T.S.

US Army Corps of Engineers®
AFGHANISTAN ENGINEER DISTRICT

MARK	DESCRIPTION	DATE	APPR.	MARK	DESCRIPTION	DATE	APPR.

DESIGNED BY: DATE:
DWN BY: CKD BY: SOLICITATION NO.:
SUBMITTED BY: CONTRACT NO.:
PLOT SCALE: 1:1 PLOT DATE: 11/22/2011 FILE NUMBER:
SIZE: ANSI D FILE NAME: VM10_E-503.dgn

U.S. ARMY CORPS OF ENGINEERS
AFGHANISTAN DISTRICT
APO AE 09356

STANDARD DESIGN
V10 - VEHICLE MAINTENANCE - 3 BAY

DETAILS

SHEET IDENTIFICATION
E3
SHEET 24 OF 26

P:\VM10_Vehicle Maintenance-3_Bay\VM10_E-503.dgn
11/22/2011 5:06:30 PM

LIGHTING FIXTURE SCHEDULE

FIXTURE MARK	STYLE NUMBER AND TYPE	NUMBER AND TYPE OF LAMPS	VOLTAGE	MOUNTING	NOTES
B	WET LOCATION WRAP AROUND SURFACE/PENDANT MOUNTED FLUORESCENT FIXTURE WITH PRISMATIC ACRYLIC LENS AND ELECTRONIC BALLAST	(2) 32W 3500K	220V – 1ø 50HZ	PENDANT MOUNTED FROM SLOPED CEILINGS	FURNISHED WITH ELECTRONIC BALLAST, VIRGIN ACRYLIC WRAP AROUND LENS.
B2	SAME AS FIXTURE 'B' WITH EMERGENCY BALLAST	(2) 32W 3500K	220V – 1ø 50HZ	PENDANT MOUNTED FROM SLOPED CEILINGS	FURNISHED WITH ELECTRONIC BALLAST, VIRGIN ACRYLIC WRAP AROUND LENS. EMERGENCY BALLAST WITH SELF TEST SWITCH.
C	INCANDESCENT ONE PIECE W/ APPROVED LENS STABILIZED HIGH IMPACT POLY CARBONATE.	(1) A19 – 100W INCANDESCENT	220V – 1ø 50HZ	WALL MOUNTED ABOVE EXTERIOR DOORS	
H	REMOTE HEAD EXTERIOR LIGHT HEAD POWERED FROM EXIT SIGN BATTERY– 12V DOUBLE HEAD CORROSION RESISTANT WITH UL34 WEATHERPROOF CONSTRUCTION	(2) 12W/12V HALOGEN LAMP	12V – 1ø 50HZ	EXTERIOR WALL MOUNTED AT TOP OF DOOR HEIGHT	
J	EXPLOSION–PROOF (2) LAMP FIXTURE PROVIDED WITH LAMPS. COPPER FREE, ALUMINUM HOUSING, TEMPERED BOROSILICATE GLASS, AND BIAX LAMPS WITH WIRE GUARD	(2) 40W 3500K BIAX FLUORESCENT LAMPS	220V – 1ø 50HZ	PENDANT MOUNTED FROM SLOPED CEILINGS	FURNISHED WITH LAMPS AND WIRE GUARD
E	UNIVERSAL MOUNT ENGINEER GRADE THERMOPLASTIC HOUSING EXIT SIGN WITH LED LAMPS, RED LETTERS 6" IN HEIGHT WITH ARROWS AS INDICATED, WITH 12V CADMIUM BATTERY WITH REMOTE HEAD CAPABILITY	LED LAMPS	220V – 1ø 50HZ	UNIVERSAL MOUNTING	

FIXTURE MARK 'B'

WET LOCATION WRAP AROUND SURFACE/PENDANT MOUNTED FLUORESCENT FIXTURE WITH PRISMATIC ACRYLIC LENS AND ELECTRONIC BALLAST.

FIXTURE MARK 'B2':
SAME FIXTURE AS 'B' WITH EMERGENCY BALLAST.

FIXTURE MARK 'C'

INCANDESCENT ONE PIECE WITH APPROVED LENS, STABILIZED HIGH IMPACT POLY CARBONATE

FIXTURE MARK 'H'

REMOTE HEAD EXTERIOR LIGHT HEAD POWERED FROM EXIT SIGN BATTERY– 12V DOUBLE HEAD CORROSION RESISTANT WITH UL34 WEATHERPROOF CONSTRUCTION

FIXTURE MARK 'E'

UNIVERSAL MOUNT ENGINEER GRADE THERMOPLASTIC HOUSING EXIT SIGN WITH LED LAMPS, RED LETTERS 6" IN HEIGHT WITH ARROWS AS INDICATED, WITH 12V CADMIUM BATTERY

FIXTURE MARK 'J'

EXPLOSION–PROOF (2) LAMP FIXTURE PROVIDED WITH LAMPS. COPPER FREE, ALUMINUM HOUSING, TEMPERED BOROSILICATE GLASS, AND BIAX LAMPS WITH WIRE GUARD

US Army Corps of Engineers®
AFGHANISTAN ENGINEER DISTRICT

MARK	DESCRIPTION	DATE	APPR.

MARK	DESCRIPTION	DATE	APPR.

U.S. ARMY CORPS OF ENGINEERS
AFGHANISTAN DISTRICT
APO AE 09356

DESIGNED BY: | DATE:
DWN BY: | CKD BY: | SOLICITATION NO.:
SUBMITTED BY: | CONTRACT NO.:
PLOT SCALE: 1:1 | PLOT DATE: V10T20211 | FILE NUMBER:
SIZE: ANSI D | FILE NAME: V8M10_E-604.dgn

STANDARD DESIGN
V10 - VEHICLE MAINTENANCE - 3 BAY

LIGHT FIXTURE SCHEDULE

SHEET IDENTIFICATION
E4
SHEET 25 OF 26

P:\VM10_Vehicle Maintenance-3_Bay\VM10_E-604.dgn
11/22/2011 5:24:35 PM

PANELBOARD J1 SURFACE MOUNTED ASYM. A.I.C. MIN.

AMP. MAIN LUGS (OR) 150 AMP. MAIN BREAKER W/ 150 AMP. TRIP

CIRCUIT BREAKER TYPE 380/220 VOLTS 3 PHASE 4 WIRE 50 HZ 150 AMP. BUS

CKT. NO.	TRIP AMPS	NO. POLES	WIRE MM 2	GND MM2	CONDUIT MM	LOAD SERVED	LOAD-V.A. A0	LOAD-V.A. B0	LOAD-V.A. C0	LOAD-V.A. A0	LOAD-V.A. B0	LOAD-V.A. C0	LOAD SERVED	CONDUIT MM	GND MM2	WIRE MM2	NO. POLES	TRIP AMPS	CKT. NO.
1	20	1	4.0	4.0	20	LIGHTING – 105, 106	1.7			0.7			LIGHTING – 101–105	20	4.0	4.0	1	20	2
3	20	1	4.0	4.0	20	RECEPTACLES – EXTERIOR		0.8			0.3		LIGHTING – POL BUILDING	20	4.0	4.0	1	20	4
5	20	1	4.0	4.0	20	RECEPTACLES – EXTERIOR			0.6			1.0	RECEPTACLES – 105, 106	20	4.0	4.0	1	20	6
7	20	1	4.0	4.0	20	RECEPTACLES – 101	0.8			1.0			RECEPTACLES – 105, 106	20	4.0	4.0	1	20	8
9	20	1	4.0	4.0	20	RECEPTACLES – 102–104		1.0			0.5		F.A.C.P.	20	4.0	4.0	1	20	10
11	60	2	16.0	16.0	32	BATTERY CHARGER	9.1		9.1				AIR COMPRESSOR (BY OTHERS)	20	4.0	4.0	2	20	12
13																			14
15	20	1	4.0	4.0	20	EXHAUST FAN – 102, 103		0.5			0.5		EXHAUST FAN – 104, 106	20	4.0	4.0	1	20	16
17	20	2	4.0	4.0	20	ELECTRIC HEAT – 106	2.5		2.5			0.7	EXHAUST FAN – 106	20	4.0	4.0	1	20	18
19										0.7			EXHAUST FAN – 106	20	4.0	4.0	1	20	20
21	20	1	4.0	4.0	20	RECEPTACLES – POL BUILDING		0.6			2.5		ELECTRIC HEAT – 106	20	4.0	4.0	2	20	22
23	20	2	4.0	4.0	20	ELECTRIC UNIT HEATER – 106	2.5		2.5			2.5							24
25										0.5			LIGHTING–MAINTENANCE PIT	20	4.0	4.0	1	20	26
27	20	2	4.0	4.0	20	ELECTRIC UNIT HEATER – 106		2.5			1.0		RECEPTACLES–MAINTENANCE PIT	20	4.0	4.0	1	20	28
29									2.5			0.2	CEILING FAN	20	4.0	4.0	1	20	30
31	20	2	4.0	4.0	20	ELECTRIC UNIT HEATER – 101	2.0						SPARE				1	20	32
33								2.0					SPARE				1	20	34
35	20	2	4.0	4.0	20	ELECTRIC UNIT HEATER – 103	1.3		1.3				SPARE				1	20	36
37													SPARE				1	20	38
39	20	1				SPARE							SPARE				1	20	40
41	20	1				SPARE							SPARE				1	20	42
							19.9	7.4	18.5	2.9	4.8	4.4							

TOTAL CONN. LOAD PER PHASE (KVA): A0 22.8 B0 12.2 C0 22.9

TOTAL CONN. LOAD 57.9 KVA. 70 % DEMAND = ESTIMATED DEMAND LOAD 40.5 SUPPLIED FROM SWITCHGEAR MAIN DISTRIBUTION

* MAIN BREAKER SHALL BE EARTH GROUND TYPE

US Army Corps of Engineers® AFGHANISTAN ENGINEER DISTRICT

MARK	DESCRIPTION	DATE	APPR.	MARK	DESCRIPTION	DATE	APPR.

U.S. ARMY CORPS OF ENGINEERS
AFGHANISTAN DISTRICT
APO AE 09356

DESIGNED BY: DATE:
DWN BY: CKD BY: SOLICITATION NO.:
SUBMITTED BY: CONTRACT NO.:
PLOT SCALE: 1:1 PLOT DATE: $DATE$
SIZE: ANSI D FILE NAME: $FILE$
FILE NUMBER:

STANDARD DESIGN
V10 - VEHICLE MAINTENANCE - 3 BAY

PANEL SCHEDULES AND RISER DIAGRAM

SHEET IDENTIFICATION
E5
SHEET 26 OF 26

$FILE$ $DATE$ $TIME$

AFGHAN NATIONAL POLICE

STANDARD BUILDING DESIGNS

WAREHOUSE BUILDING

SHEET INDEX

G1 COVER SHEET

S1 GENERAL NOTES & DESIGN CRITERIA
S2 DESIGN CRITERIA & SCHEDULES
S3 SCHEDULES
S4 FOUNDATION & ROOF FRAMING PLANS
S5 FOUNDATION SECTIONS & DETAILS
S6 SECTIONS AND DETAILS
S7 TYPICAL DETAILS

A1 FLOOR AND ROOF PLANS AND DETAILS
A2 EXTERIOR ELEVATIONS
A3 DOOR & WINDOW & FINISH TYPES & DETAILS
A4 SECTION DETAILS

E0 ELECTRICAL SYMBOLS AND ABBREVIATIONS
E1 LIGHTING AND POWER PLAN
E2 DETAILS
E3 LIGHT FIXTURE SCHEDULE
E4 PANEL SCHEDULES AND RISER DIAGRAM

US Army Corps of Engineers
Afghanistan Engineer District

SYMBOL	DESCRIPTION	DATE	APR

DESIGNED BY: JDS
DWN BY: JDS
CHK BY: JDS
DATE: 09-30-09
SUBMITTED BY: BAKER
FILE NO.: ANPSDG-001XXX

Michael Baker Jr., Inc
A unit of Michael Baker Corporation
Airside Business Park
100 Airside Drive
Moon Township, PA 15108
www.mbakercorp.com

AFGHAN NATIONAL POLICE
STANDARD DESIGN
WAREHOUSE BUILDING

COVER SHEET

SHEET REFERENCE NUMBER:
G1

100% SUBMISSION

STRUCTURAL ABBREVIATIONS:

ACI	AMERICAN CONCRETE INSTITUTE
AISC	AMERICAN INSTITUTE OF STEEL CONSTRUCTION
ASTM	AMERICAN SOCIETY FOR TESTING AND MATERIALS
ARCH	ARCHITECTURAL
B	BOTTOM
BLDG	BUILDING
BOTT	BOTTOM
℄	CENTER LINE
CFMRF	COLD FORM METAL ROOF FRAME
CFMF	COLD FORM METAL FRAME
CFS	COLD FORMED STEEL
CIP	CAST–IN–PLACE
CIPL	CAST–IN–PLACE LINTEL
CJ	CONTROL JOINT
CLR	CLEAR
CMU	CONCRETE MASONRY UNIT
COEFF	COEFFICIENT
COL	COLUMN
CONC	CONCRETE
CONT	CONTINUOUS
COORD	COORDINATE
CSJ	CONSTRUCTION JOINT
CTJ	CONTROL JOINT
DIA	DIAMETER
DIAG	DIAGONAL
DIM	DIMENSION
DWG	DRAWING
DWL	DOWEL
EA	EACH
EF	EACH FACE
ELEC	ELECTRICAL
ELEV	ELEVATION
EMBED	EMBEDMENT
EQUIV	EQUIVALENT
ETC	ET CETERA
EW	EACH WAY
EXP	EXPANSION
EXT	EXTERIOR
FTG	FOOTING
GA	GAUGE
HORIZ	HORIZONTAL
HRS	HOURS
IBC	INTERNATIONAL BUILDING CODE
INFO	INFORMATION
INT	INTERIOR
Kg	KILOGRAM
Km	KILOMETER
kPa	KILOPASCAL
L#	ANGLE (# INDICATES SIZE)
LONG	LONGITUDINAL
LLV	LONG LEG VERTICAL
M	METER
MAX	MAXIMUM
MBM	METAL BUILDING MANUFACTURER
MECH	MECHANICAL
MFG	MANUFACTURER
MID	MIDDLE
MIN	MINIMUM
MISC	MISCELLANEOUS
MM	MILLIMETER
MPa	MEGAPASCAL
MTL	METAL
MWFRS	MAIN WIND FORCE RESISTING SYSTEM
N	NEWTON
N	NORTH
N/A	NOT APPLICABLE
#	NUMBER SYMBOL FOR REBAR SIZE
NTS	NOT TO SCALE
O.C.	ON CENTER
OPNG	OPENING
ℙ or PL	PLATE
PRE–ENG	PRE–ENGINEERED
REINF	REINFORCED
REQ'D	REQUIRED
SIM	SIMILAR
SPECS	SPECIFICATIONS
STD	STANDARD
STRUCT	STRUCTURAL
T	TOP
T/	TOP OF
T/ELEV	TOP ELEVATION
T&B	TOP AND BOTTOM
THK	THICK
TYP	TYPICAL
SW	SHEAR WALL
UFC	UNIFIED FACILITIES CRITERIA
UON	UNLESS OTHERWISE NOTED
VERT	VERTICAL
W	WIDTH
W/	WITH

GENERAL NOTES

1.0 THIS PROJECT HAS BEEN DESIGNED FOR THE WEIGHTS AND MATERIALS INDICATED ON THE SHEETS AND FOR THE LIVE LOADS INDICATED IN THE DESIGN DATA. IT IS THE CONTRACTOR'S RESPONSIBILITY TO DETERMINE ALLOWABLE CONSTRUCTION LOADS AND TO PROVIDE PROPER DESIGN AND CONSTRUCTION OF FALSEWORK, FORMWORK, STAGING, BRACING, SHEETING AND SHORING, ETC.

1.1 COORDINATE THESE SHEETS WITH THE ARCHITECTURAL, MECHANICAL, ELECTRICAL, PLUMBING, AND CIVIL SHEETS. ALL DIMENSIONS SHOWN ON THE SHEETS ARE MILLIMETERS UNLESS NOTED OTHERWISE.

1.2 THE CONTRACTOR SHALL VERIFY AND COORDINATE ALL FLOOR AND ROOF OPENING SIZES AND LOCATIONS, EQUIPMENT PAD SIZES AND LOCATIONS, ANCHOR BOLT LAYOUTS, ETC WITH EQUIPMENT SELECTED. THE CONTRACTOR SHALL MAKE ANY REQUIRED MODIFICATIONS AT NO ADDITIONAL COST.

1.3 THE CONTRACTOR SHALL REFER TO THE ARCHITECTURAL, MECHANICAL, ELECTRICAL AND PLUMBING SHEETS FOR SLEEVES, CURBS, INSERTS OR OPENINGS, ETC. NOT HEREIN INDICATED.

1.4 SLAB OPENINGS SMALLER THAN 250mm DIA TO BE CORE DRILLED IN FIELD UON. SEE MECHANICAL, ELECTRICAL AND PLUMBING SHEETS FOR LOCATIONS OF THESE OPENINGS.

1.5 WORK NOT INCLUDED ON THE SHEETS BUT IMPLIED TO BE SIMILAR TO THAT SHOWN AT CORRESPONDING PLACES ELSEWHERE ON THE SHEETS SHALL BE REPEATED.

1.6 IN CASE OF CONFLICT BETWEEN THE NOTES, DETAILS AND SPECIFICATIONS THE MOST RIGID REQUIREMENTS SHALL GOVERN.

1.7 SEE ARCHITECTURAL SHEETS FOR LOCATIONS OF MASONRY AND DRYWALL NON–LOAD BEARING PARTITIONS. PROVIDE COMPRESSIBLE FIRESAFING AT TOP OF WALL AS REQUIRED BY ARCHITECTURAL SHEETS.

1.8 COORDINATE FINISHED FLOOR DATUM ELEVATION 0.0m WITH THE CIVIL SHEETS.

2.0 FOUNDATION NOTES

2.1 THE GEOTECHNICAL ANALYSIS FOR THIS PROJECT IS THE RESPONSIBILITY OF THE CONTRACTOR AWARDED THE WORK. DESIGN VALUES USED IN THE STRUCTURAL ANALYSIS OF THE BUILDINGS HEREIN INDICATED HAVE BEEN ASSUMED AND SHALL BE CONFIRMED AND VERIFIED AS PART OF THE GEOTECHNICAL INVESTIGATION. VALUES WHICH DO NOT MEET THE REQUIREMENTS INDICATED ON THE BASIS OF DESIGN SHEET SHALL BE IMMEDIATELY BROUGHT TO THE ATTENTION OF THE CONTRACTING OFFICER FOR CONSIDERATION AND DETERMINATION ON THE NEXT APPROPRIATE COURSE OF ACTION.

2.2 SEE THE SPECIFICATION FOR ADDITIONAL REQUIREMENTS TO THOSE OUTLINED IN THE GEOTECHNICAL INVESTIGATION FOR EXCAVATION AND PREPARATION OF THE FOUNDATION AND THE SLAB ON GRADE SUBGRADE INCLUDING COMPACTION PROCEDURES.

2.3 EXCAVATIONS FOR FOOTINGS SHALL HAVE THE SIDES AND BOTTOMS TEMPORARILY LINED WITH 0.25mm POLYETHYLENE IF PLACEMENT OF CONCRETE DOES NOT OCCUR WITHIN 24 HRS OF THE EXCAVATION OF THE FOOTING.

2.4 FOUNDATION CONDITIONS NOTED DURING CONSTRUCTION WHICH DIFFER FROM THOSE DESCRIBED IN THE GEOTECHNICAL REPORT SHALL BE REPORTED TO THE GENERAL CONTRACTOR BEFORE FURTHER CONSTRUCTION IS ATTEMPTED. SEE PROJECT SPECIFICATIONS.

2.5 NO FOOTINGS OR SLABS SHALL BE POURED INTO OR AGAINST SUBGRADE CONTAINING FREE WATER, FROST, ICE OR LOOSE MATERIAL. FROST DEPTH ASSUMED TO BE 800MM

2.6 ALL SLAB–ON–GRADE, TRENCH BOTTOMS AND OTHER ON–GRADE INTERIOR HORIZONTAL SURFACES SHALL BE PLACED OVER A 0.25mm VAPOR RETARDER OVER A 100mm #57 STONE WATER BARRIER PLACED ON SUBGRADE PROPERLY PREPARED IN ACCORDANCE WITH THE CONTRACT SPECIFICATIONS. (UON)

2.7 SEE PLUMBING, ELECTRICAL & CIVIL SHEETS FOR REQUIRED UNDERSLAB UTILITIES.

2.8 SEE ARCHITECTURAL SHEETS FOR ALL WATERPROOFING DETAILS AND MATERIALS.

2.9 IF UNDERMINING OF FOOTINGS OCCURS, FILL VOIDS WITH 15MPa CONCRETE. DO NOT ATTEMPT TO REPLACE AND RECOMPACT SOIL.

3.0 CONCRETE

3.1 CONCRETE SHALL HAVE THE UNIT WEIGHT AND THE MINIMUM COMPRESSIVE STRENGTHS (f'c) AT 28 DAYS AS SHOWN IN THE CONCRETE MATERIALS SCHEDULE ON SHEET S3. SEE SPECIFICATIONS FOR ADDITIONAL INFORMATION. ENTRAIN AIR TO PRODUCE TOTAL AIR CONTENT ACCORDING TO THE SPECIFICATIONS FOR CONCRETE EXPOSED TO FREEZING TEMPERATURES (EXTERIOR FOOTINGS, SLAB TURNDOWNS, EXTERIOR SLABS AND SLABS–ON–GRADE, EXTERIOR RETAINING WALLS, AND EXTERIOR GRADE BEAMS.)

3.2 NO CALCIUM CHLORIDE SHALL BE USED IN ANY CONCRETE.

3.3 MIXING, TRANSPORTING AND PLACING OF CONCRETE SHALL CONFORM TO ACI 301M–05.

3.4 ALL CONCRETE WORK SHALL CONFORM TO THE REQUIREMENTS OF THE AMERICAN CONCRETE INSTITUTE (ACI) 318M MANUAL (metric), "BUILDING CODE REQUIREMENTS FOR REINFORCED CONCRETE", AND REQUIREMENTS OUTLINED IN THE CONTRACT SPECIFICATIONS. WHEN THERE IS A CONFLICT BETWEEN ACI AND THE SPECIFICATIONS, THE MORE STRINGENT SHALL GOVERN.

3.5 CHAMFER ALL EXPOSED EXTERNAL CORNERS OF CONCRETE WITH 20mm x45 DEGREE CHAMFER UON.

3.6 CONCRETE REINFORCEMENT BARS SHALL CONFORM TO ASTM A615M–96a, GRADE 420 MPa, REINFORCING BARS SHALL NOT BE TACK WELDED, WELDED, HEATED OR CUT, UNLESS INDICATED ON THE CONTRACT DOCUMENTS. ALL LAP SPLICES SHALL BE CLASS "B" UON.

3.7 HORIZONTAL FOOTING AND HORIZONTAL WALL REINFORCEMENT SHALL BE CONTINUOUS AND SHALL HAVE 90 DEGREE BENDS AND EXTENSIONS, OR CORNER BARS OF EQUIVALENT SIZE LAPPED WITH A CLASS B TENSION SPLICE AT CORNERS AND INTERSECTIONS. TOP BAR CRITERIA SHALL APPLY IF 300mm OR MORE OF FRESH CONCRETE IS PLACED BELOW BAR.

3.8 SLABS–ON–GRADE SHALL HAVE CONSTRUCTION JOINTS OR CRACK CONTROL JOINTS AS SHOWN ON THE DRAWINGS. CONSTRUCTION JOINTS CAN BE USED AT CONTROL JOINT LOCATIONS AT CONTRACTORS OPTION. SEE SLAB PLANS & JOINT DETAILS FOR ADDITIONAL INFORMATION. FOR AREAS NOT SHOWN ON DWGS, THE MAXIMUM SPACING OF CONSTRUCTION/ CRACK CONTROL JOINTS SHALL BE 4800mm

3.9 SEE SPECIFICATIONS FOR ALL WATERPROOFING/DAMPPROOFING REQUIREMENT.

3.10 ALL CONCRETE REINFORCEMENT SHALL BE DETAILED, FABRICATED, LABELED, SUPPORTED, AND SPACED IN FORMS AND SECURED IN PLACE IN ACCORDANCE WITH THE PROCEDURES AND REQUIREMENTS OUTLINED IN THE LATEST EDITION OF THE "BUILDING CODE REQUIREMENTS FOR REINFORCED CONCRETE", ACI 318M, AND THE "MANUAL OF STANDARD PRACTICE FOR DETAILING REINFORCED CONCRETE STRUCTURES", ACI 315M, LATEST EDITION.

3.11 SHOP DRAWINGS SHOWING REINFORCING DETAILS, INCLUDING STEEL SIZES, SPACING AND PLACEMENT, SHALL BE SUBMITTED FOR REVIEW PRIOR TO FABRICATION.

3.12 ALL DOWELS SHALL MATCH SIZE AND NUMBER OF MAIN REINFORCING, UNLESS NOTED OTHERWISE ON THE SHEETS.

3.13 ADDITIONAL BARS SHALL BE PROVIDED AROUND ALL FLOOR AND WALL OPENINGS AS SHOWN ON THE SHEETS.

3.14 SEE ARCHITECTURAL SHEETS FOR TYPE AND LOCATION OF ALL FLOOR FINISHES.

3.15 THE CONTRACTOR SHALL COORDINATE ADDITIONAL WALL/SLAB OPENINGS NOT SHOWN ON STRUCTURAL SHEETS. SEE MECHANICAL, ELECTRICAL, PLUMBING AND CIVIL SHEETS.

3.16 UNLESS NOTED OTHERWISE, ALL CURBS SHALL BE REINFORCED WITH AT LEAST (1)–#13 CONTINUOUS AND #13 AT 300mm O.C. DOWELS TO STRUCTURE BELOW.

3.17 THE SUB–CONTRACTOR SHALL VERIFY ALL OPENINGS, PAD SIZES, AND ANCHOR BOLTS WITH EQUIPMENT SELECTED.

3.18 FOR ALL WALLS & PIERS, PROVIDE DOWELS INTO FOOTING AT EACH VERT REINF BAR, UON DOWEL SIZE SHALL BE SAME AS VERT REINF.

3.19 ALL DEFORMED BAR ANCHORS SHALL BE TRS NELSON DIVISION OR EQUAL 15mm DIA (UON) CONFORMING TO ASTM A–496M WITH A MINIMUM TENSILE STRENGTH OF 550 MPa. INSTALL ANCHORS IN ACCORDANCE WITH MANUFACTURERS RECOMMENDATIONS BY AUTOMATIC END WELDING AS INDICATED ON THE DRAWINGS. NO UNAUTHORIZED OR FIELD WELDING SHALL BE MADE WITHOUT AUTHORIZATION FROM THE MANUFACTURER.

3.20 ALL REINFORCING INDICATED TO BE WELDED SHALL BE IN ACCORDANCE WITH ASTM A706M. "LOW ALLOY STEEL DEFORMED BARS FOR CONCRETE REINFORCEMENT". ANY INSTALLATIONS USING MANUFACTURER'S EQUIPMENT SHALL BE PER MANUFACTURER'S RECOMMENDATIONS.

3.21 PROVIDE CONCRETE POUR STOPS OR FORMED AS REQUIRED FOR INSTALLATION OF ALL CONCRETE WORK.

3.22 PROVIDE ADDITIONAL (2)–#13 x 600mm REINFORCING BARS IN SLAB–ON GRADE AT ALL RE–ENTRANT CORNERS. PLACE BARS AT MID–DEPTH OF SLAB WITH A CLEARANCE OF 50mm FROM CORNER UON.

4.0 CONCRETE MASONRY

4.1 MASONRY CONSTRUCTION AND MATERIALS SHALL CONFORM TO ALL REQUIREMENTS OF THESE CONTRACT DOCUMENTS AND THE PROJECT SPECIFICATIONS.

4.2 THE SPECIFIED ULTIMATE COMPRESSIVE STRENGTH OF CONCRETE MASONRY (f'm) ON THE NET AREA IS A MINIMUM OF 10.4 MPa.

4.3 PROVIDE TWO #16 BARS CONTINUOUS IN ALL MASONRY LINTELS UON ON THE SHEETS. BOND BEAM REINFORCING SHALL BE CONTINUOUS AND SPACED AT A MAXIMUM OF 1200mm OC VERTICALLY. ALL BOND BEAMS SHALL BE A MINIMUM OF 200mm IN DEPTH WITH REINFORCING BEING CONTINUOUS AND HAVING STANDARD ACI HOOKS AT EACH END. PROVIDE STANDARD BAR SPLICES AS SPECIFIED.

4.4 FOR WALL REINFORCING SEE "MIN CMU WALL REINFORCING" DETAILS ON SHEET S7. PROVIDE STANDARD BAR SPLICES AS SPECIFIED. ALL VERTICAL REINFORCEMENT EXTENDS FULL HEIGHT OF WALL.

4.5 CMU CELLS THAT REQUIRE VERTICAL REINFORCING BARS AS INDICATED ON THE CONTRACT DRAWINGS AND/OR SPECS SHALL HAVE REINF BARS PLACED IN CENTERS OF CMU CELLS AND CONTINUOUSLY GROUTED UON.

4.6 PROVIDE LADDER TYPE JOINT REINFORCEMENT AT 200 EXTERIOR, & 400 INTERIOR ON CENTER MAXIMUM, UON MINIMUM ROD SIZE USED SHALL BE 9 GA. DEFORMED WIRE AND CONFORM TO ASTM A82M, UON.

4.7 PROVIDE CONTROL JOINTS AS INDICATED ON THE ARCHITECTURAL SHEETS.

4.8 GROUT FOR MASONRY SHALL BE NORMAL WEIGHT AND HAVE A MINIMUM COMPRESSIVE STRENGTH OF 25 MPa AT 28 DAYS. GROUT SHALL CONFORM TO ASTM C476. GROUT LIFTS SHALL NOT EXCEED 1400mm.

4.9 USE MORTAR TYPE S CONFORMING TO ASTM C270M, SEE SPECIFICATIONS.

4.10 CONCRETE MASONRY UNITS SHALL BE NORMAL WEIGHT AND CONFORM TO ASTM C90.

4.11 ALL CMU CELLS, OPEN CAVITIES, AND AIR SPACES SHALL BE GROUTED TO STOP FRAGMENTS FROM MORTAR BLAST

4.12 BOND BEAM REINFORCING SHALL BE DISCONTINUOUS AT CONTROL JOINTS (UON). MAXIMUM CONTROL JOINT SPACING SHALL BE AS INDICATED ON THE ARCHITECTURAL SHEETS.

4.13 CONTRACTOR SHALL COORDINATE LOCATION OF ALL OPENINGS SEE ARCH, MECH, ELEC, AND PLUMBING SHEETS FOR SIZE AND LOCATION OF OPENINGS.

4.14 MASONRY WALLS SHALL NOT BE BACK FILLED PRIOR TO THE MORTAR AND GROUT ATTAINING THEIR RESPECTIVE MAXIMUM DESIGN STRENGTHS PER SPECIFICATIONS.

5.0 CFMRF – COLD FORM METAL ROOF FRAMING SYSTEM

5.1 CFMF SHALL BE DESIGNED BY CFMF MANUFACTURER'S ENGINEER FOR ALL LOADING PER CODE AND AS INDICATED ON THE SHEETS.

5.2 FOR WIND LOADS, SEE THE DESIGN CRITERIA ON SHEET S2.

5.3 SUBMIT VENDOR'S PUBLISHED LITERATURE, TEST DATA AND INSTALLATION INSTRUCTIONS FOR METAL STUD ASSEMBLY AND ACCESSORIES INCLUDING OTHER DATA AS MAY BE REQUIRED TO CERTIFY COMPLIANCE WITH PERFORMANCE REQUIREMENTS SPECIFIED HEREIN.

5.4 SHOP DRAWINGS AND DESIGN ANALYSIS SHALL BE STAMPED AND APPROVED BY A LICENSED PROFESSIONAL ENGINEER.

5.5 CONNECTIONS AND GAUGE SIZES ARE MINIMUM AND SHALL BE INCREASED AS NECESSARY TO PROVIDE A STRUCTURALLY ADEQUATE SYSTEM. KICKERS MAY BE ADDED TO REDUCE THE STUD HEIGHTS WHERE ACCEPTABLE AND COORDINATED WITH THE ARCHITECTURAL DRAWINGS.

5.6 CRMRF SHALL HAVE THE FOLLOWING MINIMUM PROPERTIES:

STUD/RAFTER/EAVE STRUT/BRACE/BLOCKING:
Fy = 344 MPa
GAUGE = 18
DEPTH = 152.3 mm
WIDTH = 34.8 mm
MOMENT OF INERTIA, Ix = 847×10^3 mm^4
SECTION MODULUS, Sx = 11.2×10^3 mm^3

TRACK:
Fy = 344 MPa
GAUGE = 16
DEPTH = 152.3 mm
WIDTH = 38 mm
MOMENT OF INERTIA, Ix = 1083×10^3 mm^4
SECTION MODULUS, Sx = 13.8×10^3 mm^3

PURLIN:
Fy = 393 MPa
GAUGE = 16
MOMENT OF INTERTIA (TOP COMPRESSION), Ixt = 23.7×10^3 mm^4
MOMENT OF INTERTIA (BOTT COMPRESSION), Ixb = 22.7×10^3 mm^4
SECTION MODULUS (TOP COMPRESSION), Sxt = 1.8×10^3 mm^3
SECTION MODULUS (BOTT COMPRESSION), Sxb = 1.7×10^3 mm^3

STRUCTURAL DESIGN CRITERIA

ALL DESIGNS SHALL CONFORM TO THE PROVISIONS OF THE IBC 2006 AS APPLICABLE

1.0 DESIGN LOADS

1.1 DEAD LOADS

1.1.1 ROOF DEAD LOADS – CONCRETE FRAMING

	MAXIMUM GRAVITY LOAD
CONC FLAT SLAB	4.80 KPa
MECH/ELEC/PLUMBING	0.15 KPa
MISC	0.05 KPa
	5.00 KPa

1.1.2 ROOF DEAD LOADS – CONVENTIONAL LIGHT FRAMING

	MAXIMUM GRAVITY LOAD	MINIMUM GRAVITY LOAD
LIGHT GAUGE FRAMING	0.20 KPa	0.15 KPa
INSULATION	0.10 KPa	0.05 KPa
METAL ROOFING	0.14 KPa	0.05 KPa
	0.44 KPa	0.25 KPa

1.2 LIVE LOADS (PER IBC 2006)

1.2.1 ROOF LIVE LOADS: ALL BUILDINGS

GREATER OF 1.0 KPa MINIMUM OR SNOW LOAD

1.2.2 ELEVATED FLOOR UNIFORM LIVE LOADS

OFFICE	2.40 KPa
CORRIDOR	4.80 KPa

1.2.3 SLAB–ON–GRADE LIVE LOADS

ALL BUILDINGS 4.80 KPa

1.3 SNOW LOADS (PER IBC 2006)

1.3.1 DESIGN PARAMETERS

GROUND SNOW LOAD (per UFC 3–310–01)	1.0 KPa
SNOW IMPORTANCE FACTOR	1.0
SNOW EXPOSURE FACTOR	1.0

1.4 SEISMIC LOADS (PER IBC 2006 & UFC 3–310–04)

1.4.1 SEISMIC PARAMETERS – CAST–IN–PLACE CONCRETE STRUCTURES

SEISMIC OCCUPANCY CATEGORY	II
SEISMIC IMPORTANCE FACTOR (I)	1.0
SEISMIC SITE CLASS	D
Ss	1.28
S1	0.51
Sds	0.853
Sd1	0.51
SEISMIC DESIGN CATEGORY	D
SEISMIC RESISTING SYSTEM	SPECIAL REINFORCED MASONRY SHEAR WALLS
RESPONSE MODIFICATION FACTOR (R)	5.0
RESPONSE COEFFICIENT (CS)	0.17
SEISMIC ANALYTICAL PROCEDURE	EQUIV LATERAL FORCE
SEISMIC BASE SHEAR	209kN

US Army Corps of Engineers
Afghanistan Engineer District

SYMBOL	DESCRIPTION	DATE	APR

DESIGNED BY: KMP
DWN BY: RCG
CHK BY: CWW
DATE: 09–30–09
SUBMITTED BY: BAKER
FILE NO.: ANPSDS–001XXX

Michael Baker Jr., Inc
A unit of Michael Baker Corporation
Airside Business Park
100 Airside Drive
Moon Township, PA 15108
www.mbakercorp.com

AFGHAN NATIONAL POLICE
STANDARD DESIGN
WAREHOUSE BUILDING

GENERAL NOTES & DESIGN CRITERIA

SHEET REFERENCE NUMBER:
S1

100% SUBMISSION

STRUCTURAL DESIGN CRITERIA (CONT)

ALL DESIGNS SHALL CONFORM TO THE PROVISIONS OF THE IBC 2006 AS APPLICABLE

1.6 WIND LOADS (PER IBC 2006)

1.6.1 DESIGN PARAMETERS

BASIC WIND SPEED	137 Km/h
WIND IMPORTANCE FACTOR	1.0
WIND EXPOSURE CATEGORY	D
DIRECTIONALITY COEFFICIENT (Kd)	0.85
TOPOGRAPHIC FACTOR (Kzt)	1.0

1.6.2 DESIGN WIND PRESSURE – MAIN WINDFORCE RESISTING SYSTEM

LOCATION	CORNER ZONE WIDTH "a"	MEAN ROOF HEIGHT (h)	WINDWARD WALL (@ MEAN ROOF HEIGHT)	LEEWARD WALL (@ MEAN ROOF HEIGHT)	ROOF
FIELD ZONE	N/A	4080mm	680 N/m^2	−480 N/m^2	−470 N/m^2
CORNER ZONE	1440mm	4080mm	800 N/m^2	−418 N/m^2	−750 N/m^2

a = 10% OF LEAST HORIZONTAL DIMENSION OR 0.4h, WHICHEVER IS SMALLER, BUT NOT LESS THAN EITHER 4% OF LEAST HORIZONTAL DIMENSION OR 0.9M.
h = MEAN ROOF HIEGHT, IN METERS, EXCEPT THAT EAVE HIEGHT SHALL BE USED FOR ANGLE GREATER THAN 10°.

1.5.3 DESIGN WIND PRESSURE – WALL COMPONENTS AND CLADDING

EXTERIOR WALL SYSTEMS & THEIR ATTACHMENTS TO THE PRIMARY STRUCTURE SHALL BE DESIGNED FOR THE PRESSURES SHOWN IN THE DIAGRAM BELOW:

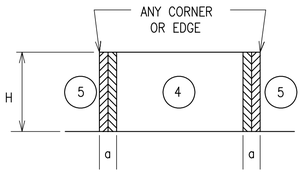

LOCATION	WINDWARD PRESSURE N/m^2 (inward)		LEEWARD PRESSURE N/m^2 (outward)		a
	4	5	4	5	
MAIN BUILDING					(mm)
AREA = 1 m^2	788	788	−850	−1050	1440
AREA = 2 m^2	748	748	−815	−967	1440
AREA = 5 m^2	700	700	−765	−880	1440
AREA = 10 m^2	648	648	−715	−750	1440

NOTES:
1. DESIGN WIND PRESSURES ABOVE REPRESENT THE NET PRESSURE (SUM OF INTERNAL AND EXTERNAL PRESSURE) APPLIED NORMAL TO ALL SURFACES.
2. LINEAR INTERPOLATION BETWEEN VALUES OF TRIBUTARY AREA IS PERMISSIBLE.
3. PLUS AND MINUS SIGNS SIGNIFY PRESSURE TOWARD AND AWAY FROM THE EXTERIOR SURFACE, RESPECTIVELY.

1.6 WIND LOADS (CONT)

1.6.4 DESIGN WIND PRESSURE – ROOF COMPONENTS AND CLADDING

ROOF COMPONENTS & THEIR ATTACHMENTS SHALL BE DESIGNED FOR THE PRESSURES SHOWN IN THE ADJACENT DIAGRAM & TABLE BELOW:

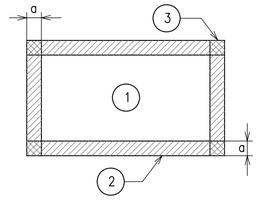

ROOF MEAN HEIGHT

LOCATION	GROSS UPLIFT PRESSURE N/m^2 (upward)			a
	1	2	3	
MAIN BUILDING				(mm)
AREA = 1 m^2	−787	−931	−1738	1440
AREA = 2 m^2	−787	−931	−1738	1440
AREA = 5 m^2	−787	−931	−1738	1440
AREA = 10 m^2	−787	−931	−1738	1440

NOTES:
1. DESIGN WIND PRESSURES ABOVE REPRESENT THE NET PRESSURE (SUM OF INTERNAL AND EXTERNAL PRESSURE) APPLIED NORMAL TO ALL SURFACES.
2. LINEAR INTERPOLATION BETWEEN VALUES OF TRIBUTARY AREA IS PERMISSIBLE.
3. PLUS AND MINUS SIGNS SIGNIFY PRESSURE TOWARD AND AWAY FROM THE EXTERIOR SURFACE, RESPECTIVELY.

2.0 FOUNDATION DESIGN CRITERIA (TO BE CONFIRMED BY THE CONTRACTOR)

THE GEOTECHNICAL ANALYSIS FOR THIS PROJECT IS THE RESPONSIBILITY OF THE CONTRACTOR AWARDED THE WORK. DESIGN VALUES USED IN THE STRUCTURAL ANALYSIS OF THE BUILDINGS HEREIN INDICATED HAVE BEEN ASSUMED AND SHALL BE CONFIRMED AND VERIFIED AS PART OF THE GEOTECHNICAL INVESTIGATION. VALUES WHICH DO NOT MEET THE REQUIREMENTS INDICATED BELOW SHALL BE IMMEDIATELY BROUGHT TO THE ATTENTION OF THE CONTRACTING OFFICER FOR CONSIDERATION AND DETERMINATION ON THE NEXT APPROPRIATE COURSE OF ACTION.

2.1.1 SOIL DESIGN PARAMETERS

NET ALLOWABLE SOIL BEARING CAPACITY	96.0 KPa
UNIT WEIGHT OF SOIL (moist)	1800 Kg/m^3
COEFF ACTIVE EARTH PRESSURE (Kpa)	0.30
COEFF PASSIVE EARTH PRESSURE (Kpp)	3.33
COEFF AT-REST EARTH PRESSURE (Kpr)	.55
COEFF OF SOIL FRICTION	.35
SUBGRADE MODULUS	4120 g/cm^3
MINIMUM BEARING DEPTH BELOW GRADE	800mm
SEISMIC SITE CLASS (based on in-situ soil)	D

CONCRETE BEAM SCHEDULE

GRADE BEAM						
MARK	SIZE (BxH)	REINFORCING TOP	BOTTOM	STIRRUPS	MIDBAR	REMARKS
GB1	400x750	(3)−#22	(3)−#22	#13 @ 200	(1) #22 EF	TOP BAR LAP AT CENTER BOT BAR LAP PAST COL
ROOF BEAM						
MARK	SIZE (BxH)	REINFORCING TOP	BOTTOM	STIRRUPS	MIDBAR	REMARKS
RB1	400x600	(2)−#19	(2)−#19	#13 @ 250	N/A	TOP BAR LAP AT CENTER BOT BAR LAP PAST COL

NOTE:
1. DIMENSIONS NOTED ARE MILLIMETERS (mm) UON.

SPREAD FOOTING SCHEDULE

MARK	FOOTING SIZE (mm) LENGTH	WIDTH	THICKNESS	FOOTING REINFORCING	REMARKS
F1	1700	1700	300	(6)−#16 EW BOTT	-----
F2	1800	1800	300	(6)−#16 EW BOTT	-----

NOTES:
1. DIMENSIONS NOTED ARE MILLIMETERS (mm) UON.

CONCRETE COLUMN SCHEDULE

MARK	SIZE (LxW)	REINFORCING VERT BARS	TIES
C1	400x400	(8)−#25	#13 @ 100 (CORE OF EXT & CORNER COLUMNS) #13 @ 150 (CORE OF INTERIOR COLUMNS) #13 @ 200 (OTHER)

NOTE:
1. DIMENSIONS NOTED ARE MILLIMETERS (mm) UON.
2. SECOND STORY COLUMNS ARE SAME AS FIRST STORY COLUMNS.
3. CORE INDICATES THE AREA OF COLUMN & BEAM INTERSECTION.
4. TIE INDICATES PERIMETER & CROSS TIE COMBINED.

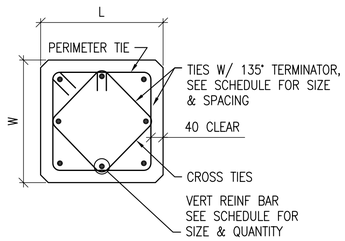

1 / S2 S2 **COLUMN DETAIL**
SCALE: 1:10

US Army Corps of Engineers
Afghanistan Engineer District

SYMBOL	DESCRIPTION	DATE	APR

DESIGNED BY: KMP | DATE: 09-30-09
DWN BY: RCG | SUBMITTED BY: BAKER
CHK BY: CWW | FILE NO.: ANPSDS-002XXX

Michael Baker Jr., Inc
A unit of Michael Baker Corporation
Airside Business Park
100 Airside Drive
Moon Township, PA 15108
www.mbakercorp.com

AFGHAN NATIONAL POLICE
STANDARD DESIGN
WAREHOUSE BUILDING

DESIGN CRITERIA & SCHEDULES

SHEET REFERENCE NUMBER:
S2

100% SUBMISSION

MINIMUM LAP SPLICES OF REINFORCING BARS IN TENSION (PER ACI 318M-05)

f'c = 28 MPa CONCRETE

BAR SIZE \ CENTER TO CENTER BAR SPACING	(---TOP BARS--) LESS THAN 4db	(---TOP BARS--) 4db OR MORE	(--OTHER BARS--) LESS THAN 4db	(--OTHER BARS--) 4db OR MORE	4db
#10	460	460	410	410	40
#13	660	610	510	480	50
#16	1020	760	790	580	60
#19	1450	910	1120	710	80
#22	1960	1090	1500	840	90
#25	2590	1450	1980	1120	100
#29	3280	1830	2510	1420	110
#32	4140	2340	3200	1780	130
#36	5080	2840	3910	2180	140

NOTES:

1. LAP SPLICES ABOVE ARE IN MILLIMETERS UON.
2. YIELD STRENGTH OF REINFORCEMENT, fy, IS 420MPa (LAP SPLICE LENGTH IS IN MILLIMETERS).
3. CONCRETE IS NORMAL WEIGHT (2400Kg/m^3).
4. TOP BAR INDICATES HORIZONTAL REINFORCEMENT WHICH IS PLACED ABOVE 300mm OR MORE OF FRESH CONCRETE.
5. SEE COLUMN SCHEDULE FOR COLUMN AND SHEAR WALL VERTICAL LAP SPLICE.
6. STRAIGHT DEVELOPMENT LENGTH OF AN UNLAPPED BAR IS EQUAL TO VALUE FROM TABLE DIVIDED BY 1.3.
7. CATEGORY FOR BARS SPACED LESS THAN 4d, OR ON CENTER CORRESPONDS TO CATEGORY 1 IN THE CRSI HANDBOOK WHEREAS FOR BARS SPACED 4d, OR MORE ON CENTER CORRESPOND TO CRSI CATEGORY 5.

CONCRETE COVER SCHEDULE

MINIMUM CONCRETE COVER PROTECTION FOR REINFORCEMENT BARS SHALL BE AS FOLLOWS: (SEE ACI 318M-05, SECTION 7.7 FOR CONDITIONS NOT NOTED). DIMENSIONS FOR BAR PLACEMENT GIVEN IN SECTIONS AND DETAILS SHALL SUPERSEDE MINIMUM COVER REQUIREMENTS GIVEN HERE. DIMENSIONS ARE IN mm.

FOOTINGS (EARTH FORMED)		70
COLUMNS / PIERS (TO TIES)		40
GRADE BEAMS OR SLAB TURNED DOWN EDGES:		
TOP		40
BOTTOM (EARTH FORMED)		70
SIDES (EARTH FORMED)		70
SIDES (BOARD FORMED)	#16 BAR & SMALLER	40
	#19 THRU #36 BAR	50
ELEVATED BEAMS & SLABS:		
BEAM TIES & STIRRUPS (NOT EXPOSED TO WEATHER)		40
BEAM TIES & STIRRUPS (EXPOSED TO WEATHER)		50
FLOOR SLABS (NOT EXPOSED TO WEATHER)		20
FLOOR SLABS (EXPOSED TO WEATHER)		
#19 & LARGER		50
#13 & SMALLER		40
ROOF SLAB BARS		25
SLABS-ON-GRADE (NO EXPOSURE TO WEATHER) FROM TOP		20
SLABS-ON-GRADE (EXPOSURE TO WEATHER) FROM TOP		40
UTILITY TUNNEL WALLS, RETAINING WALLS AND SHEAR WALLS, (NO SURFACES SHALL BE EARTH FORMED) EARTH SIDE AND FRONT SIDE (EXPOSED TO WEATHER):		
#16 BAR AND SMALLER		40
#19 THRU #36 BAR		50

PROVIDE STANDARD BAR CHAIRS AND SPACERS AS REQUIRED TO MAINTAIN CONCRETE PROTECTION SPECIFIED.

MASONRY CONCRETE LINTEL SCHEDULE

OPENING TYPE OR SIZE, BEAM LOCATION OR TYPE	MAX SPAN (mm)	BEAM DEPTH (mm)	MAIN REINFORCING TOP	MAIN REINFORCING BOTTOM	MAIN REINFORCING OTHER	SHEAR REINF STIRRUPS
EXT WINDOW OR DOOR	900	400	(2)-#13	(2)-#13		----
INT WALL OPENING, NON-BEARING	1800	400		(2)-#13		----
INT WALL OPENING, NON-BEARING	900	200		(2)-#13		----

NOTES:

1. STRUCTURAL DRAWINGS DO NOT INDICATE ALL OPENINGS IN MASONRY WALLS. VERIFY NUMBER, SIZE AND LOCATION OF ALL OPENINGS IN MASONRY WALLS FROM ARCHITECTURAL DRAWINGS AND APPROVED PLUMBING, MECHANICAL, AND ELECTRICAL SHOP DRAWINGS.
2. PROVIDE 200mm BEARING EA END FOR 200mm DEEP MASONRY LINTEL. PROVIDE 400mm BEARING EA END FOR 400mm DEEP MASONRY LINTEL.
3. FOR HEAD DETAILS REFER TO ARCHITECTURAL DRAWINGS.
4. REINFORCING SHALL BE ASTM A615M, GRADE 420. CONCRETE FOR CAST-IN-PLACE BEAMS SHALL HAVE A MINIMUM COMPRESSIVE STRENGTH OF 28 MPa AT 28 DAYS.
5. CONTRACTOR SHALL SUBMIT FOR APPROVAL SHOP DRAWINGS AND SCHEDULES SHOWING SIZE, DETAILS, LOCATIONS, ETC FOR ALL CAST-IN-PLACE BEAMS IN CMU WALLS.

TYPICAL CMU WALL REINFORCING SCHEDULE

WALL TYPE OR LOCATION	WALL THICKNESS (mm)	CONT. VERT. REINF. (CENTERED IN CMU, UON)	CONT. CAST IN PLACE LINTEL (CIP BB) DEPTH (mm)	REINF (BOTT UON)	MAX CIPL VERT SPACING (mm)	REMARKS
ALL PERIMETER/EXTERIOR WALLS (UON)	200	1-#16 @ 800	200	2-#16	1200	-----
NON-LOAD BEARING INTERIOR WALLS WITH TOP AND BOTT. SUPPORTS	200	1-#13 @ 1200	200	2-#16	1200	-----

NOTES:

1. REINFORCING SIZES AND SPACING GIVEN IN SECTIONS AND DETAILS SHALL SUPERSEDE THE ABOVE SCHEDULE REQUIREMENTS.
2. PROVIDE CONTINUOUS CAST IN PLACE CONCRETE BOND BEAM AT ALL WALL LATERAL SUPPORT LOCATIONS.
3. REINFORCING INDICATED SHALL BE CONTINUOUS FOR FULL EXTENT OF SPLICE FOLLOWING THE REQUIREMENTS OF THE LAP SPLICE TABLE SHOWN ON THIS SHEET.
4. WALLS HAVE BEEN DESIGNATED AS VERTICALLY SPANNING UON AND THEREFORE MUST BE TEMPORARILY SUPPORTED DURING CONSTRUCTION UNTIL THE SUPPORTING DIAPHRAGMS (FLOOR AND ROOF SYSTEMS) HAVE BEEN COMPLETELY INSTALLED. SHORING IS THE RESPONSIBILITY OF THE CONTRACTOR.
5. ALL CMU WALLS SHALL BE FULLY GROUTED IN LIFTS NOT EXCEEDING THOSE BY CODE (UON)
6. SEE TYPICAL CMU WALL DETAILS ON SHEET S7.

CONCRETE MATERIALS SCHEDULE

STRUCTURAL ELEMENT	f'c CONCRETE COMPRESSIVE STRENGTH @ 28 DAYS (MPa)
SLAB-ON-GRADE/TURN-DOWN SLABS	28
ROOF AND FLOOR SLABS	28
ALL FOOTINGS (UON)	28
MISC. CURBS, WALLS AND PADS (UON)	28
CAST-IN-PLACE LINTEL	28
CONCRETE FRAMING - BEAMS AND COLUMNS	28

NOTES:

1. ALL CONCRETE SHALL BE NORMAL WEIGHT CONCRETE. (2400 Kg/m^3 UON)
2. ALL CONCRETE SHALL HAVE A MAX WATER-CEMENT RATIO OF 0.45.

STANDARD HOOKS IN TENSION PER (ACI 318M-05)

HOOK DEVELOPMENT LENGTH Ldh (mm)	
BAR SIZE	f'c 28 MPa
#10	180
#13	250
#16	300
#19	380
#22	430
#25	480
#29	560
#32	610
#36	690

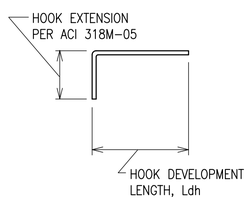

NOTES:

1. CONCRETE IS NORMAL WEIGHT CONCRETE.
2. BAR YIELD STRENGTH, fy = 420 MPa
3. SIDE COVER REQUIREMENTS OF ACI SECT. 12.5.3 ARE ASSUMED TO NOT BE MET.
4. TIE OR STIRRUP REQUIREMENTS OF ACI SECT. 12.5.3 ARE ASSUMED TO NOT BE MET.
5. REDUCTION FOR EXCESS REINFORCEMENT IS NOT TAKEN.
6. HOOK DEVELOPMENT LENGTH IS VALID FOR 180° HOOKS ALSO.

MASONRY REINFORCING MINIMUM LAP SPLICES

BAR SIZE	BASIC LAP SPLICE Ld FOR CMU REINFORCING
#10	450
#13	600
#16	750
#19	900
#22	1050
#25	1200

MAXIMUM CMU WALL UNSUPPORTED HEIGHT OR LENGTH

	WALL THICKNESS (mm)	EXTERIOR WALL NON-LOAD BEARING (mm)	INTERIOR NON-LOAD BEARING WALL (mm)
MAX HEIGHT OR LENGTH BETWEEN SUPPORTS	200	4800	7200

NOTE: CMU WALL MAXIMUM LATERAL SUPPORT SPACING GIVEN IN SECTIONS AND DETAILS SHALL SUPERSEDE THE ABOVE SCHEDULE REQUIREMENTS.

US Army Corps of Engineers
Afghanistan Engineer District

SYMBOL	DESCRIPTION	DATE	APR

DESIGNED BY: KMP
DWN BY: RCG
CHK BY: CWW
DATE: 09-30-09
SUBMITTED BY: BAKER
FILE NO.: ANPSDS-003XXX

Michael Baker Jr., Inc
A unit of Michael Baker Corporation
Airside Business Park
100 Airside Drive
Moon Township, PA 15108
www.mbakercorp.com

AFGHAN NATIONAL POLICE
STANDARD DESIGN
WAREHOUSE BUILDING

SCHEDULES

SHEET REFERENCE NUMBER:
S3

100% SUBMISSION

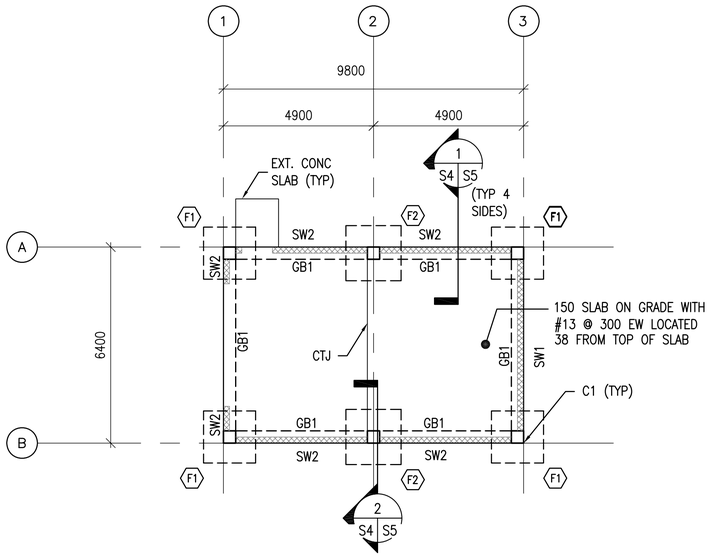

1 S4 S4 FOUNDATION PLAN

SCALE: 1:100

N

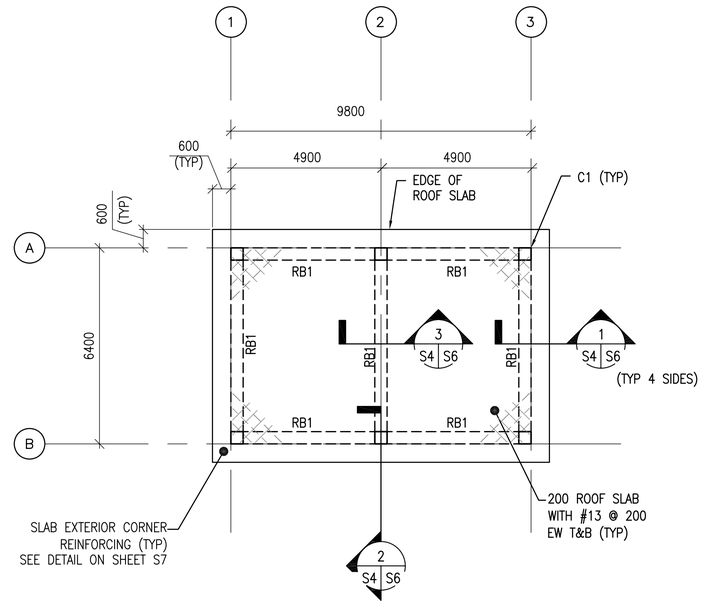

2 S4 S4 ROOF FRAMING PLAN

SCALE: 1:100

N

FOUNDATION PLAN NOTES:

1. FINISH FIRST FLOOR ELEVATION SHALL BE (DATUM 0.0). ALL PLUS OR MINUS DIMENSIONS INDICATED ON PLAN OR REFERRED TO IN NOTES RELATE TO FINISH FIRST FLOOR ELEVATION.
2. TOP OF EXTERIOR FOOTINGS SHALL BE –950 UNLESS OTHERWISE INDICATED.
3. SPREAD FOOTINGS INDICATED BY F# ON PLAN. REFER TO SPREAD FOOTING SCHEDULE ON SHEET S2.
4. COLUMNS INDICATED THUS C# ON PLAN. REFER TO COLUMN SCHEDULE ON SHEET S2.
5. REFER TO DRAWINGS S1TO S3 FOR STRUCTURAL NOTES AND BASIS OF DESIGN.
6. CTJ & CSJ INDICATES SLAB CONTROL OR CONSTRUCTION JOINTS. RESPECTIVELY, REFER TO SHEET S7 FOR DETAILS.
7. SEE CMU WALL REINFORCING SCHEDULE ON SHEET S3.
8. REFER TO ARCHITECTURAL SHEETS FOR MASONRY PARTITION TYPES.
9. SEE MECHANICAL AND ELECTRICAL SHEETS FOR CONCRETE PAD LOCATIONS, SIZES, AND THICKNESS NOT SHOWN. SEE SHEET S7 FOR DETAILS.

PLAN NOTES:

1. TOP OF SLAB ELEVATION = 3600 UNLESS NOTED OTHERWISE
2. RB# DENOTES ROOF BEAM TYPE. SEE BEAM SCHEDULE ON SHEET S2.
3. REFER TO SHEETS S1 TO S3 FOR STRUCTURAL NOTES AND BASIS OF DESIGN.
4. COORD W/ ARCHITECTURAL SHEETS FOR COLD–FORMED STEEL OVERBUILT FRAMING ABOVE ROOF SLAB.
5. COLD–FORMED METAL OVERBUILT ROOF FRAMING NOT SHOWN FOR CLARITY. SEE OVERBUILT ROOF FRAMING DETAILS AND SECTIONS ON SHEET S6

UNLESS OTHERWISE NOTED, LINEAR DIMENSIONS SHOWN ARE IN MILLIMETERS (MM)

0 2000 4000 8000

SCALE: 1: 100

US Army Corps of Engineers

Afghanistan Engineer District

SYMBOL	DESCRIPTION	DATE	APR

DESIGNED BY: KMP
DATE: 09–30–09
DWN BY: MDB
SUBMITTED BY: BAKER
CHK BY: CWW
FILE NO.: ANPSDS–104XXX

Michael Baker Jr., Inc.
A unit of Michael Baker Corporation
Airside Business Park
100 Airside Drive
Moon Township, PA 15108
www.mbakercorp.com

AFGHAN NATIONAL POLICE
STANDARD DESIGN
WAREHOUSE BUILDING

FOUNDATION PLAN & ROOF PLANS

SHEET REFERENCE NUMBER:

S4

100% SUBMISSION

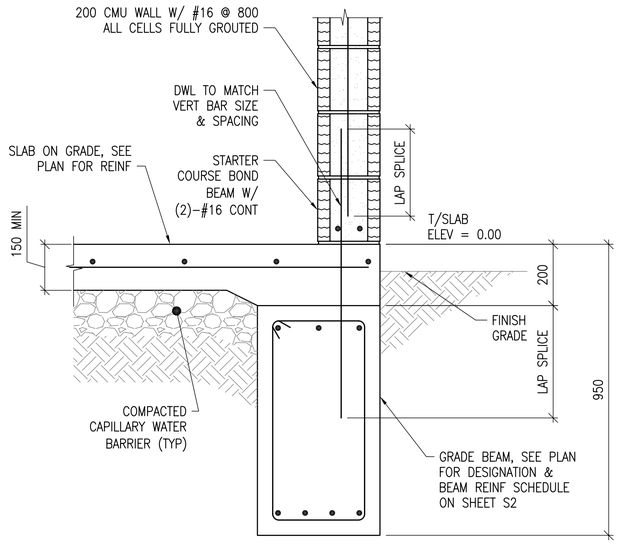

1 S4 S5 SECTION
SCALE: 1:10

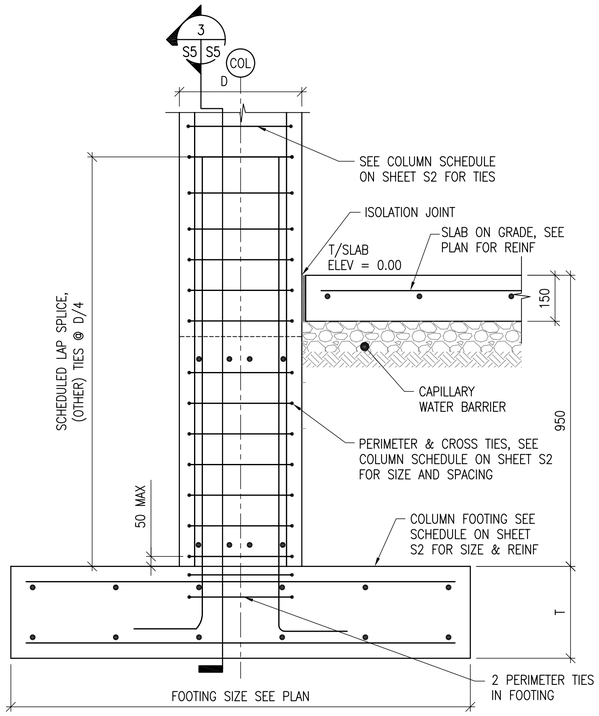

2 S4 S5 SECTION
SCALE: NTS

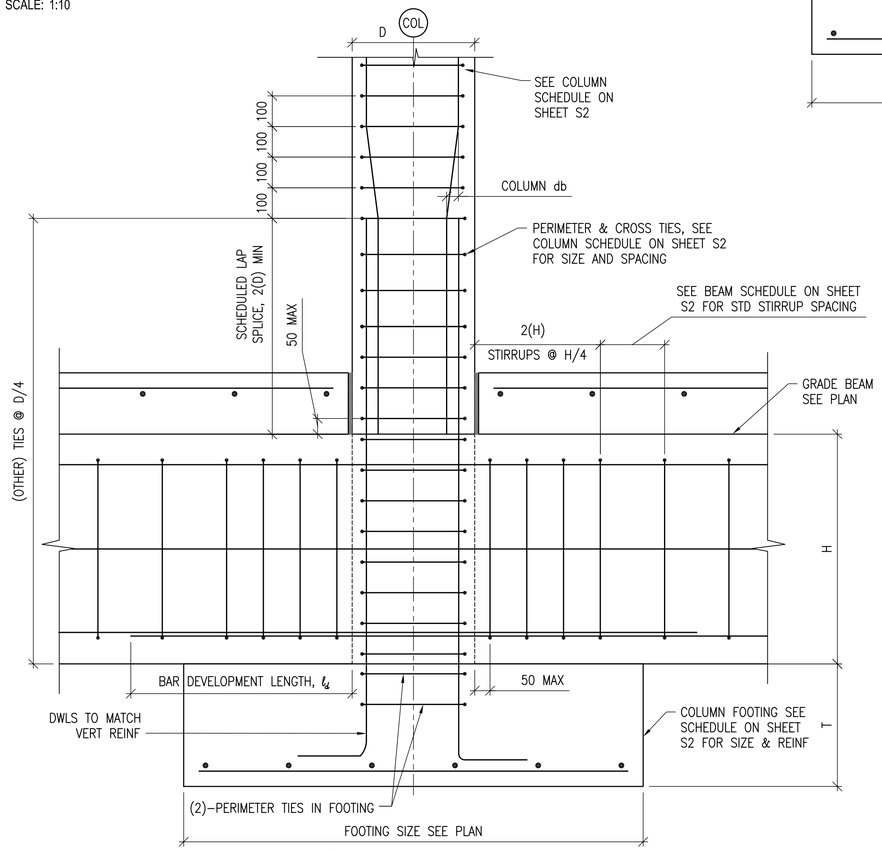

3 S5 S5 SECTION
SCALE: NTS

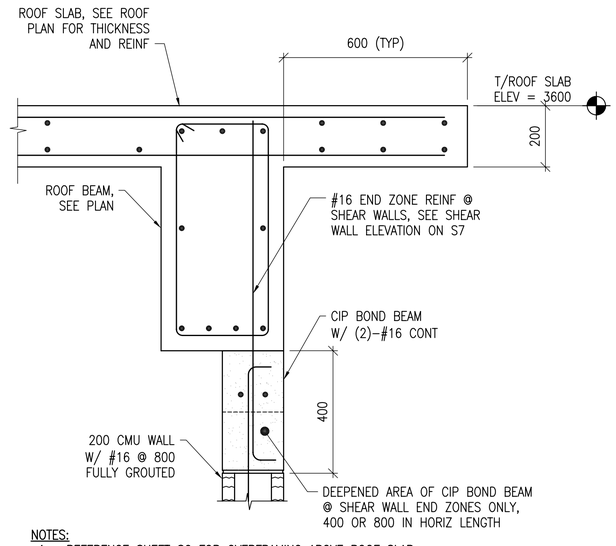

NOTES:
1. REFERENCE SHEET S6 FOR OVERFRAMING ABOVE ROOF SLAB.

4 S7 S5 SECTION
SCALE: 1:10

UNLESS OTHERWISE NOTED, LINEAR DIMENSIONS SHOWN ARE IN MILLIMETERS (MM)

0 200 400 800
SCALE: 1: 10

US Army Corps of Engineers
Afghanistan Engineer District

SYMBOL	DESCRIPTION	DATE	APR

DESIGNED BY: KMP
DATE: 09-30-09
DWN BY: RCG
SUBMITTED BY: BAKER
CHK BY: CWW
FILE NO.: ANPSDS-305XXX

Michael Baker Jr., Inc
A unit of Michael Baker Corporation
Airside Business Park
100 Airside Drive
Moon Township, PA 15108
www.mbakercorp.com

AFGHAN NATIONAL POLICE
STANDARD DESIGN
WAREHOUSE BUILDING

FOUNDATION SECTIONS & DETAILS

SHEET REFERENCE NUMBER:
S5

100% SUBMISSION

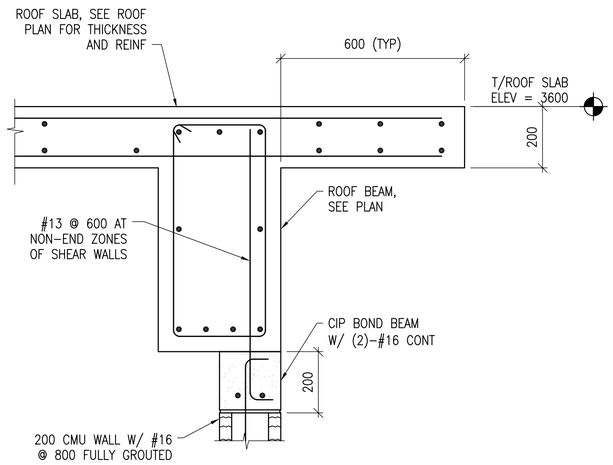

NOTES:
1. REFERENCE THIS SHEET FOR OVERFRAMING ABOVE ROOF SLAB.

1 S4 S6 SECTION
SCALE: 1:10

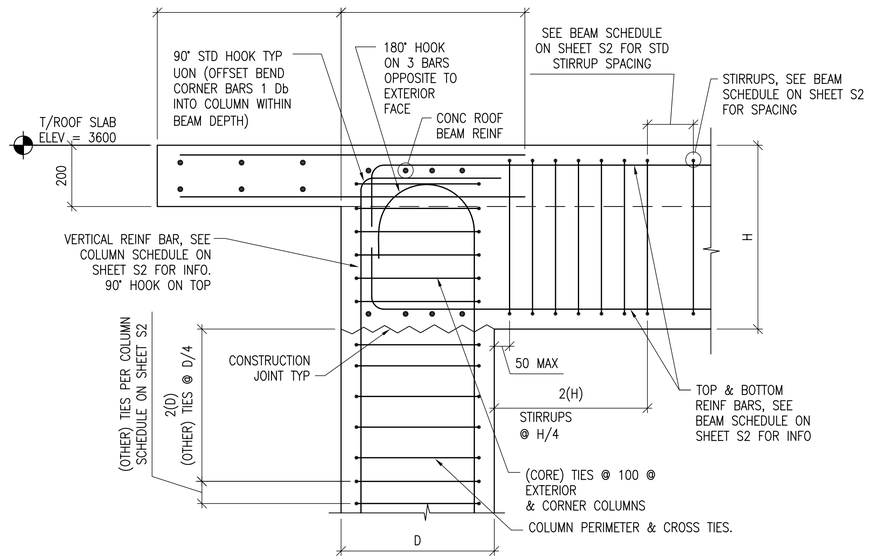

2 S4 S6 SECTION
SCALE: 1:10

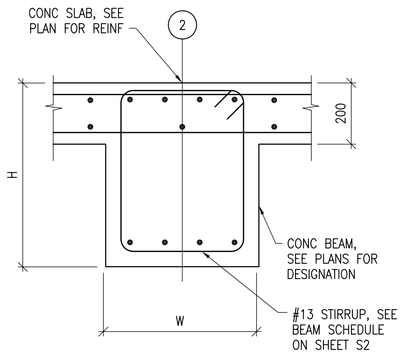

3 S4 S6 SECTION
SCALE: 1:10

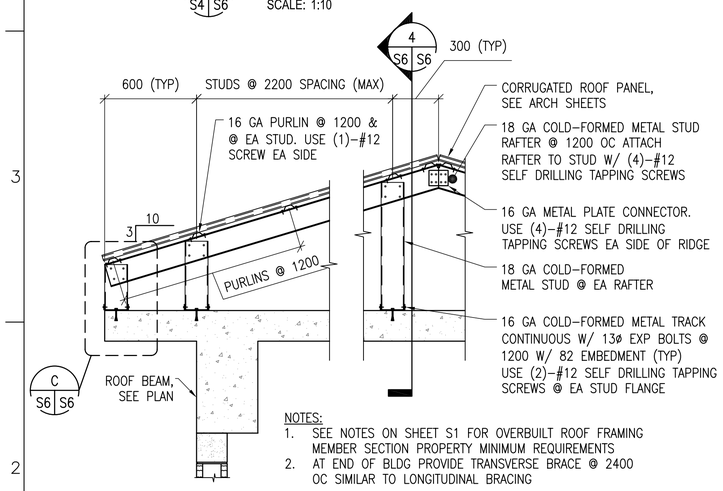

NOTES:
1. SEE NOTES ON SHEET S1 FOR OVERBUILT ROOF FRAMING MEMBER SECTION PROPERTY MINIMUM REQUIREMENTS
2. AT END OF BLDG PROVIDE TRANSVERSE BRACE @ 2400 OC SIMILAR TO LONGITUDINAL BRACING

A S6 S6 TYPICAL OVERBUILT ROOF FRAMING DETAIL
SCALE: 1:20

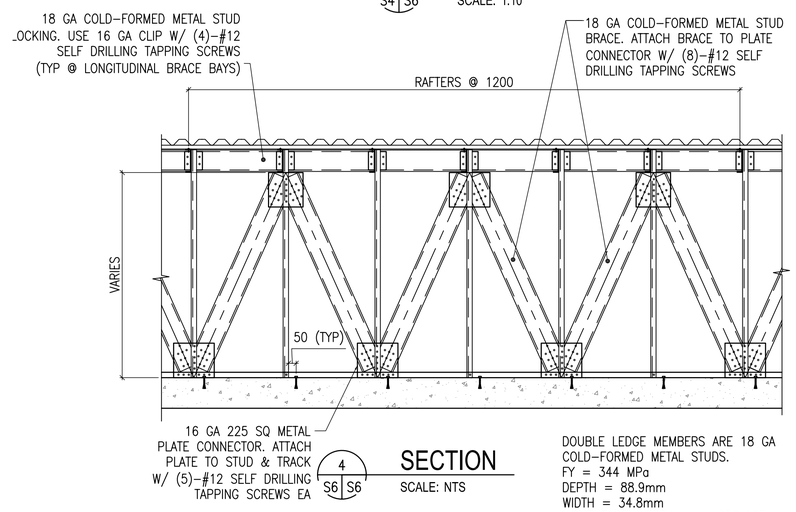

4 S6 S6 SECTION
SCALE: NTS

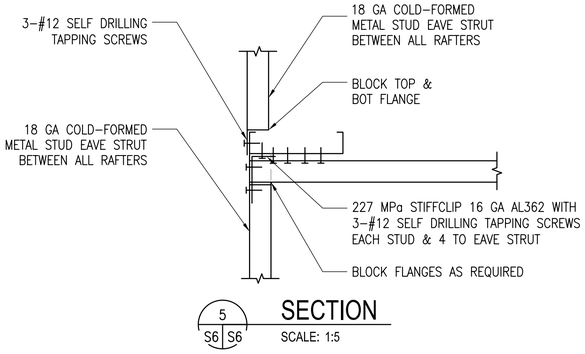

5 S6 S6 SECTION
SCALE: 1:5

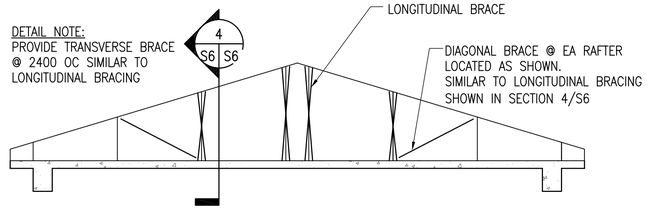

B S6 S6 TYPICAL ROOF BRACE LAYOUT DETAIL
SCALE: NTS

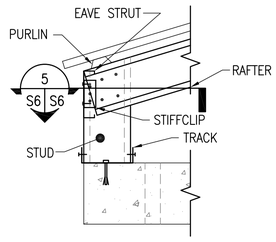

C S6 S6 DETAIL
SCALE: 1:10

DOUBLE LEDGE MEMBERS ARE 18 GA COLD-FORMED METAL STUDS.
FY = 344 MPa
DEPTH = 88.9mm
WIDTH = 34.8mm
MOMENT OF INERTIA, Ix = 236x103 mm4
SECTION MODULUS, SX = 5.3x103 mm3

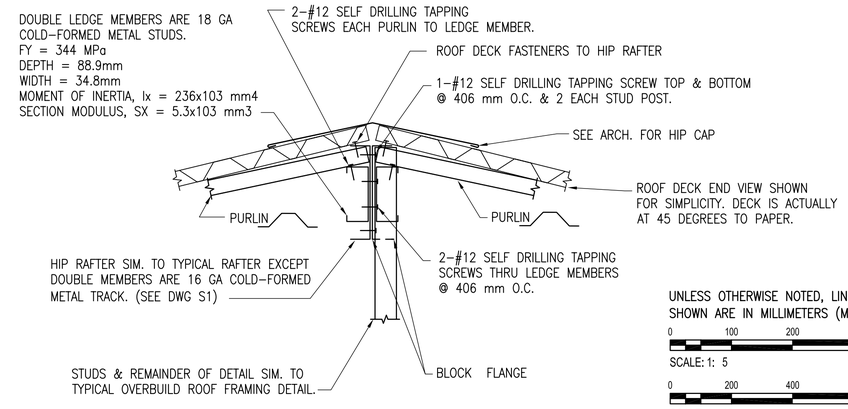

TYPICAL HIP FRAMING DETAIL
SCALE: 1:5

UNLESS OTHERWISE NOTED, LINEAR DIMENSIONS SHOWN ARE IN MILLIMETERS (MM)

0 100 200 400
SCALE: 1: 5

0 200 400 800
SCALE: 1: 10

0 400 800 1600
SCALE: 1: 20

US Army Corps of Engineers
Afghanistan Engineer District

SYMBOL	DESCRIPTION	DATE	APR

DESIGNED BY: KMP
DWN BY: RCG
CHK BY: CWW
DATE: 09-30-09
SUBMITTED BY: BAKER
FILE NO.: ANPSDS-306XXX

Michael Baker Jr., Inc
A unit of Michael Baker Corporation
Airside Business Park
100 Airside Drive
Moon Township, PA 15108
www.mbakercorp.com

AFGHAN NATIONAL POLICE
STANDARD DESIGN
WAREHOUSE BUILDING

SECTIONS & DETAILS

SHEET REFERENCE NUMBER:
S6

100% SUBMISSION

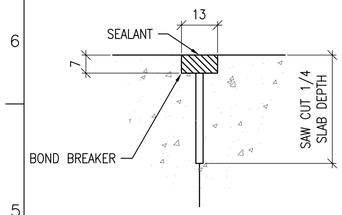

CONTROL JOINT DETAIL

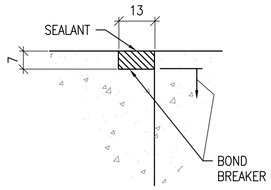

CONSTRUCTION JOINT DETAIL

TYPICAL CONCRETE SLAB JOINT FINISH DETAIL

1 / S7

SCALE: NTS

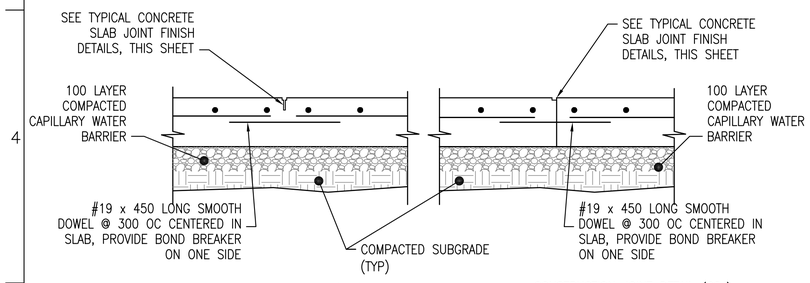

CONTROL JOINT DETAIL (CTJ)

CONSTRUCTION JOINT DETAIL (CSJ)

TYPICAL SLAB ON GRADE JOINT DETAILS

2 / S7

SCALE: NTS

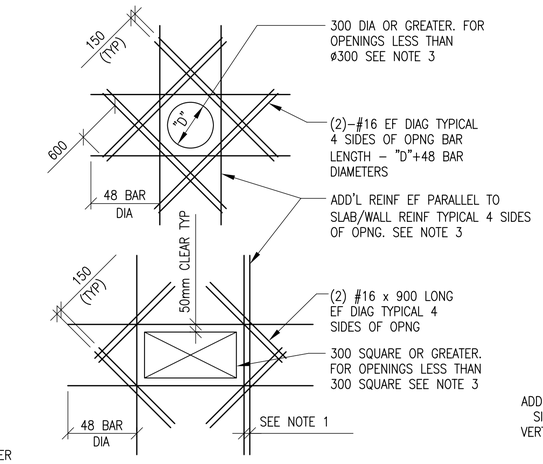

SLAB OPENINGS

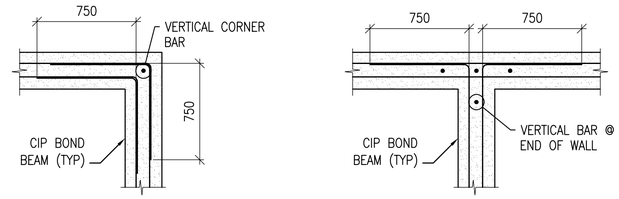

BOND BEAM CORNER

BOND BEAM INTERSECTION

CIP BOND BEAM DETAILS

6 / S7

SCALE: NTS

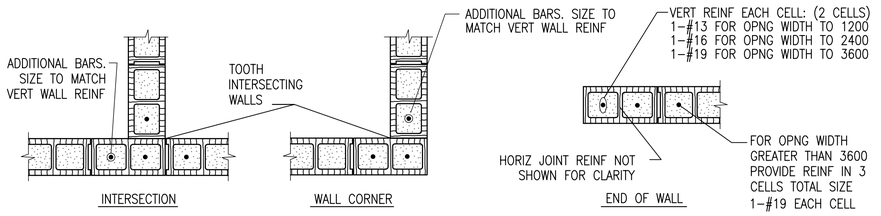

INTERSECTION

WALL CORNER

END OF WALL

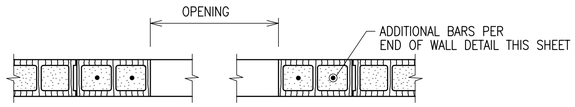

MASONRY OPENING W/ LINTEL

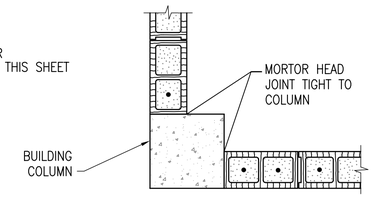

WALL END AT COLUMN

NOTES:
1. OPENING WIDTH SHALL NOT EXCEED 3600 FOR THIS TYPE OF JAMB
2. ALL CMU CELLS TO BE FULLY GROUTED

TYPICAL CMU DETAILS

7 / S7

SCALE: NTS

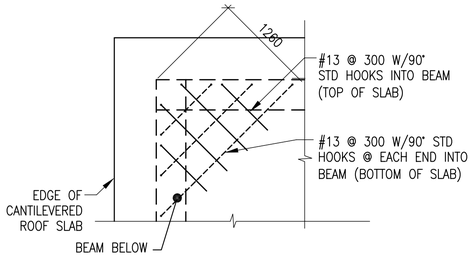

ELEVATED SLAB CORNERS

ADD'L REINFORCEMENT DETAILS

5 / S7

SCALE: NTS

DETAIL NOTES:
1. WHERE MORE THAN ONE ADDITIONAL BAR IS REQUIRED PARALLEL TO THE EXISTING SLAB/WALL REINFORCING THE ADDITIONAL REINFORCING BARS SHALL BE SPACED AT 100 ON CENTER.
2. ADDITIONAL REINFORCING PARALLEL TO THE SLAB/WALL REINFORCING SHALL BE #16 BARS THAT PROVIDE A STEEL AREA ON EACH SIDE OF THE OPENING EQUAL TO 1/2 THE AREA OF THE REINFORCING CUT BY THE OPENING.
3. FOR OPENINGS WITH SIDES OR DIAMETERS LESS THAN 300 SPREAD THE SLAB/WALL REINFORCING TO CLEAR THE OPENING.

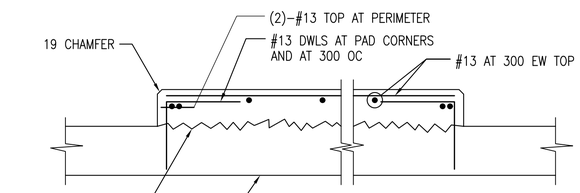

INTERIOR EQUIPMENT PAD DETAIL

3 / S7

SCALE: NTS

DETAIL NOTE:
1. COORDINATE EQUIPMENT PAD SIZE AND LOCATIONS W/ ELECTRICAL/MECHANICAL SHEETS AND EQUIPMENT
2. MANUFACTURER.

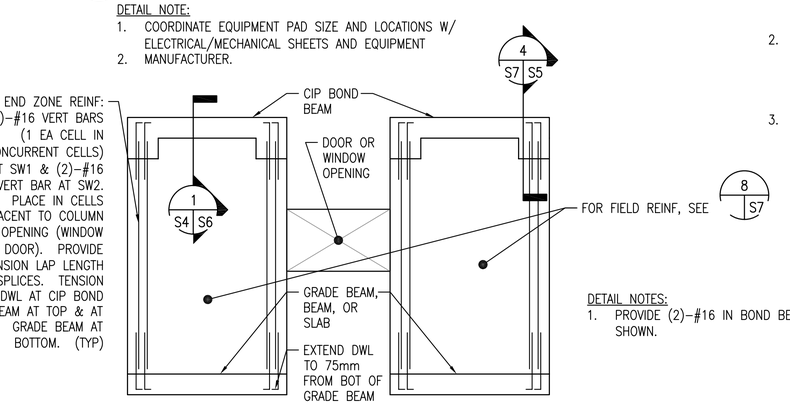

DETAIL NOTES:
1. PROVIDE (2)-#16 IN BOND BEAMS AT 1200 OC, NOT SHOWN.

SPECIAL REINFORCED MASONRY SHEAR WALL ELEVATION

4 / S7

SCALE: NTS

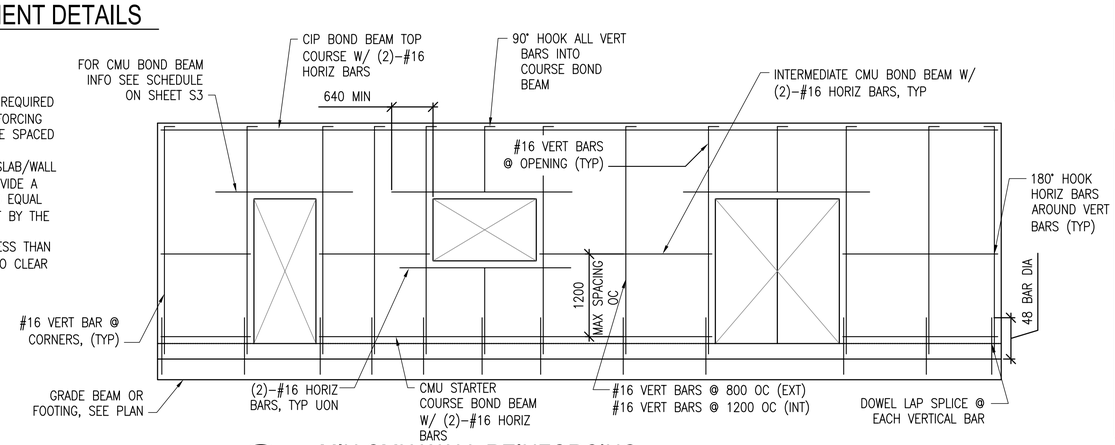

MIN CMU WALL REINFORCING

8 / S7

SCALE: NTS

LINTEL NOTES:
CMU LINTEL REINFORCEMENT AS PER SCHEDULE ON SHEET S3

UNLESS OTHERWISE NOTED, LINEAR DIMENSIONS SHOWN ARE IN MILLIMETERS (MM)

US Army Corps of Engineers
Afghanistan Engineer District

SYMBOL	DESCRIPTION	DATE	APR

DESIGNED BY: KMP
DATE: 09-30-09
DWN BY: RCG
SUBMITTED BY: BAKER
CHK BY: CWW
FILE NO.: ANPSDS-507XXX

Michael Baker Jr., Inc.
A unit of Michael Baker Corporation
Airside Business Park
100 Airside Drive
Moon Township, PA 15108
www.mbakercorp.com

AFGHAN NATIONAL POLICE
STANDARD DESIGN
WAREHOUSE BUILDING

TYPICAL DETAILS

SHEET REFERENCE NUMBER:
S7

100% SUBMISSION

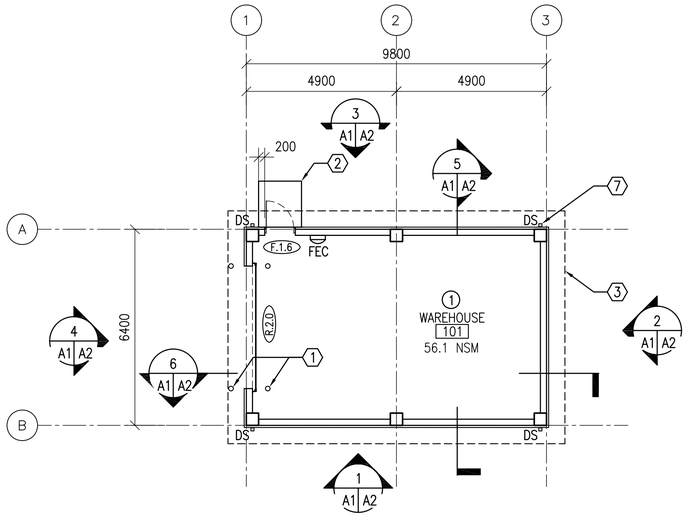

FLOOR PLAN

SCALE: 1:100

65.0 GSM

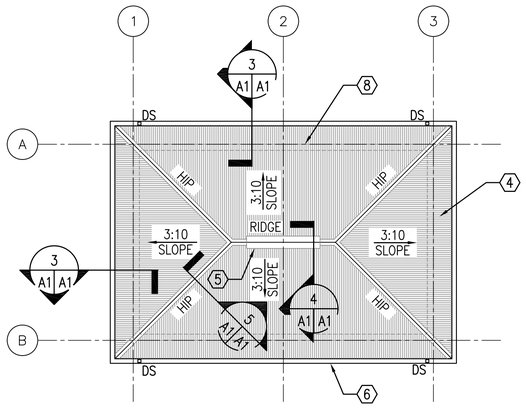

ROOF PLAN

SCALE: 1:100

GENERAL NOTES:

A. OPENINGS FOR DOORS SHALL BE LOCATED 200 MM FROM THE ADJACENT WALL UNLESS NOTED OTHERWISE

B. SURFACES TO BE PAINTED SHALL BE CLEAN AND FREE OF FOREIGN MATTER BEFORE APPLICATION OF PAINT. CLEANING SHALL BE SCHEDULED SO THAT DUST AND OTHER CONTAMINANTS WILL NOT FALL ON WET, NEWLY PAINTED SURFACES.

C. CONCRETE AND INTERIOR MASONRY SURFACES GROUTED SOLID SHALL BE ALLOWED TO DRY AT LEAST 30 DAYS BEFORE PAINTING EXCEPT CONCRETE SLAB ON GRADE WHICH SHALL BE ALLOWED TO CURE 90 DAYS BEFORE PAINTING.

D. PAINTS CONTAINING LEAD IN EXCESS OF 0.06 PERCENT BY WEIGHT OF THE TOTAL NONVOLATILE CONTENT SHALL NOT BE USED.

E. MERCURIAL FUNGICIDES SHALL NOT BE USED IN OIL–BASE PAINT.

F. REMOVE LOOSE DIRT AND CLEAN SURFACES BEFORE PAINTING. APPLY PAINT TO INTERIOR STRUCTURAL RIGID FRAMINGS AND CEILINGS AND TEST FOR ADHESION. PRIMER COAT FOR MASONRY. INITIAL FIRST COAT WITH AN ACRYLIC LATEX PAINT FOR EXTERIOR SURFACES AND A SECOND COAT WITH A WATER REPELLENT ACRYLIC LATEX PAINT.

G. METAL DOORS AND FRAMES SHALL RECEIVE A PRIMER COAT PLUS TWO COATS OF PAINT.

H. DIMENSIONS ARE TO STRUCTURAL COLUMN GRID, EDGE OF WINDOW OPENINGS, AND TO HINGE SIDE OF DOOR OPENINGS.

KEY NOTES:

1. STEEL PIPE BOLLARD – RE: DETAIL 3/A4
2. CONCRETE STOOP – RE: DETAIL 2/A4
3. LINE OF ROOF OVERHANG ABOVE
4. CORRUGATED METAL ROOF PANELS ON COLD–FORMED METAL FRAMING
5. CONTINUOUS RIDGE VENT
6. METAL GUTTER
7. METAL DOWNSPOUT WITH SPLASH BLOCK
8. LINE OF BUILDING WALL BELOW

ROOM FINISHES:

1. WALLS: PAINTED PLASTER,
   FLOOR: SEALED CONCRETE
   CEILING: PAINTED PLASTER APPLIED TO STRUCTURE

LEGEND:

- F.1.4 — DOOR TYPE, SEE SHEET A3
- X — KEY NOTE
- FEC — FIRE EXTINGUISHER CABINET
- 1 — ROOM FINISH DESIGNATION

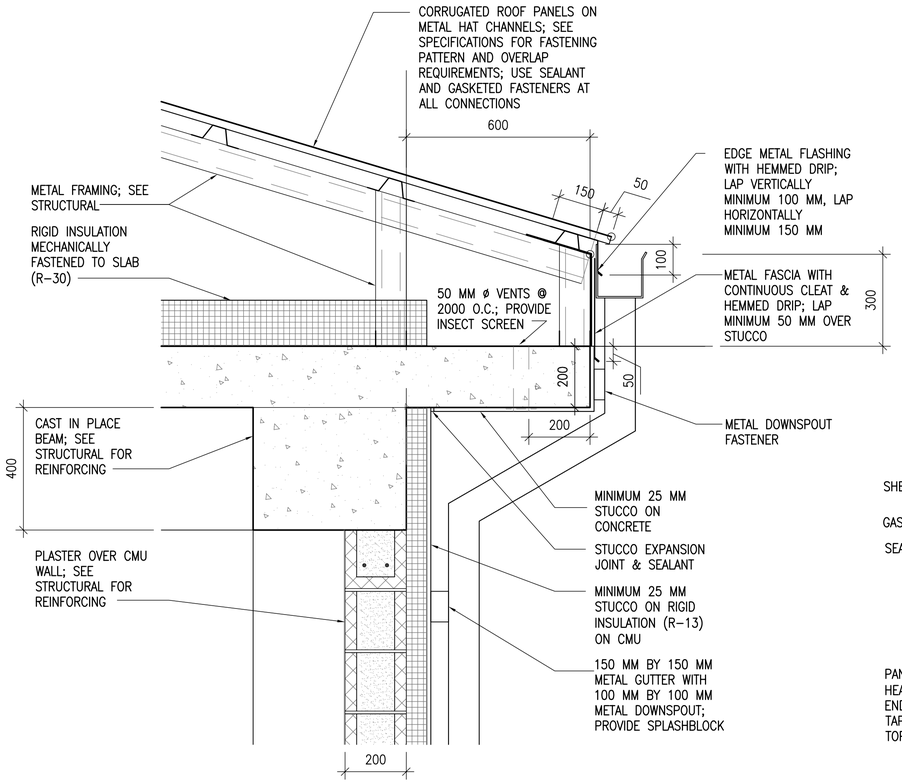

EAVE DETAIL

SCALE: 1:10

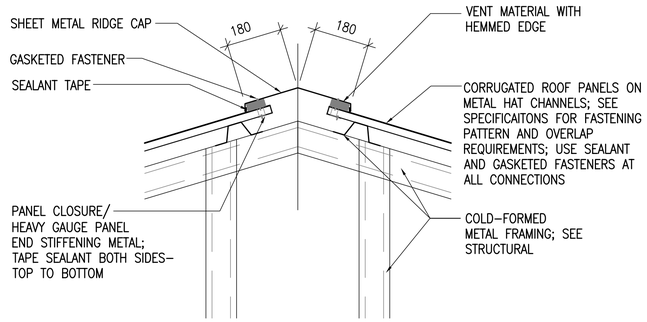

RIDGE VENT DETAIL

SCALE: 1:10

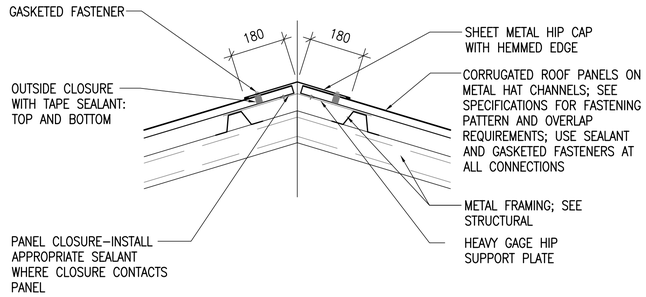

HIP DETAIL

SCALE: 1:10

UNLESS OTHERWISE NOTED, LINEAR DIMENSIONS SHOWN ARE IN MILLIMETERS (MM)

0 200 400 800

SCALE: 1: 10

0 2000 4000 8000

SCALE: 1: 100

US Army Corps of Engineers

Afghanistan Engineer District

SYMBOL	DESCRIPTION	DATE	APR

DESIGNED BY: PFF
DATE: 09–30–09
DWN BY: ECN
SUBMITTED BY: BAKER
CHK BY: NLJ
FILE NO.: ANPSDA–101XXX

Michael Baker Jr., Inc.
A unit of Michael Baker Corporation
Airside Business Park
100 Airside Drive
Moon Township, PA 15108
www.mbakercorp.com

AFGHAN NATIONAL POLICE
STANDARD DESIGN
WAREHOUSE BUILDING

FLOOR AND ROOF PLANS AND DETAILS

SHEET REFERENCE NUMBER:

A1

100% SUBMISSION

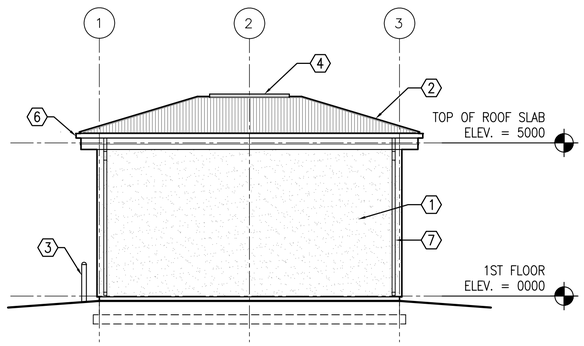

1 A1 A2 EAST ELEVATION
SCALE: 1:100

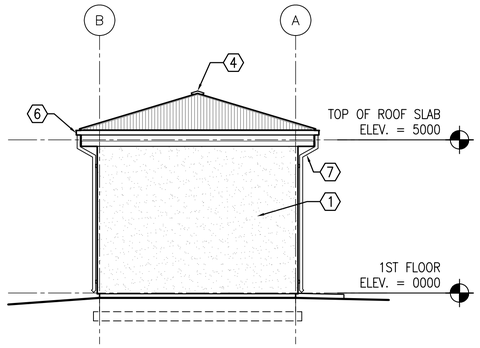

2 A1 A2 NORTH ELEVATION
SCALE: 1:100

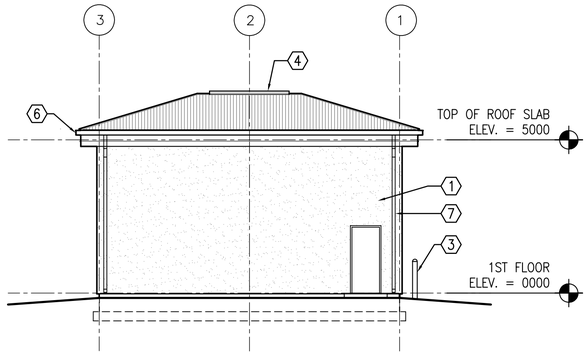

3 A1 A2 WEST ELEVATION
SCALE: 1:100

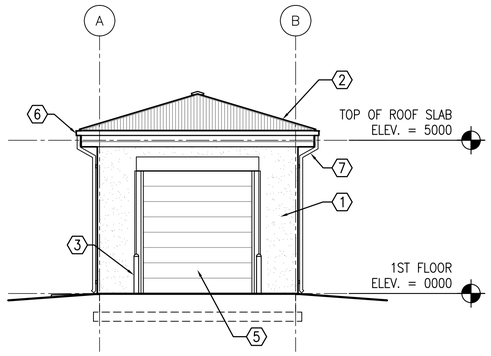

4 A1 A2 SOUTH ELEVATION
SCALE: 1:100

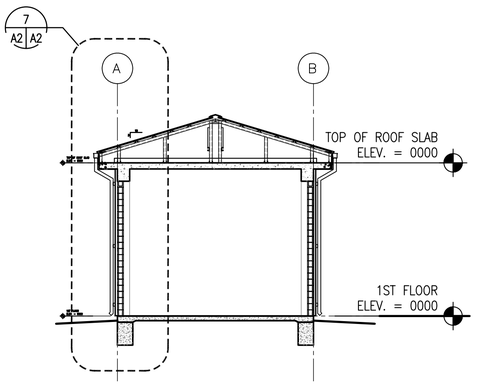

5 A1 A2 BUILDING SECTION
SCALE: 1:100

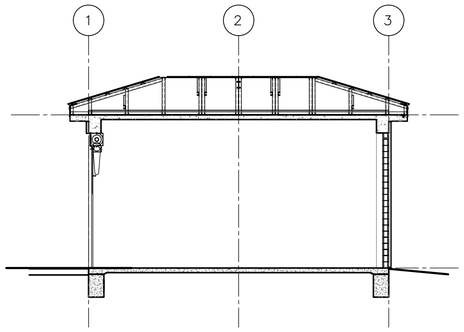

6 A1 A2 BUILDING SECTION
SCALE: 1:100

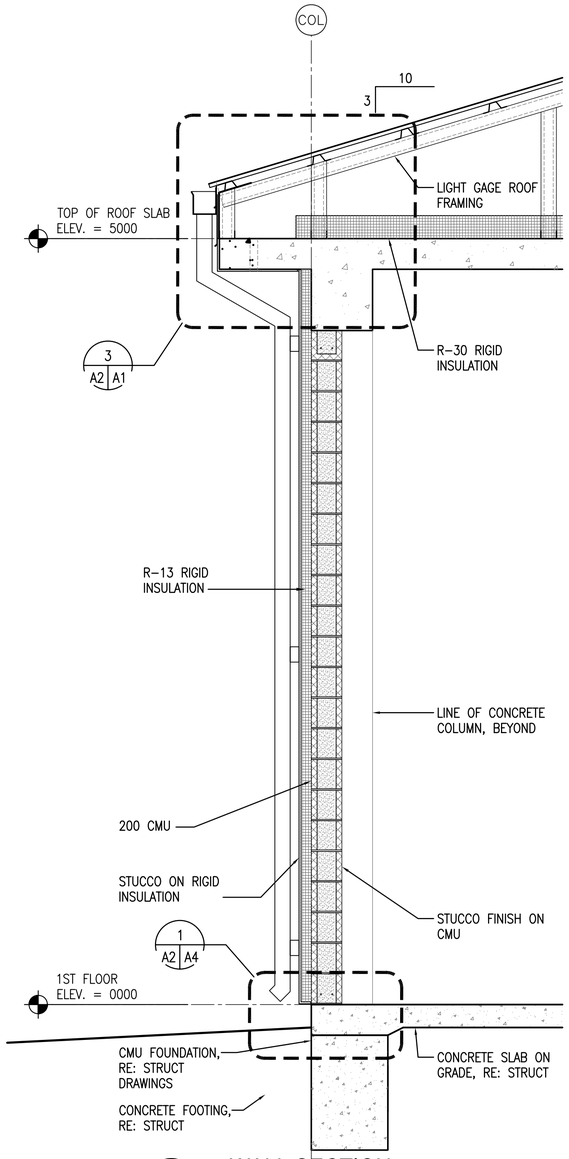

7 A2 A2 WALL SECTION
SCALE: 1:20

KEY NOTES:

1. STUCCO AND RIGID INSULATION SYSTEM OVER CMU AND CONCRETE.
2. CORRUGATED METAL ROOF PANELS ON COLD-FORMED METAL FRAMING.
3. GALVANIZED STEEL PIPE BOLLARD FILLED WITH CONCRETE ON EACH SIDE OF ROLL UP DOOR.
4. CONTINUOUS RIDGE VENT
5. OVERHEAD COILING DOOR
6. METAL GUTTER
7. METAL DOWNSPOUT WITH SPLASH BLOCK

GENERAL NOTES:

A. COORDINATE SIZE AND LOCATION OF OPENINGS FOR MECHANICAL ITEMS WITH MECHANICAL DRAWINGS.

B. PROVIDE STRUCTURAL LINTELS AS REQUIRED – RE: STRUCT

UNLESS OTHERWISE NOTED, LINEAR DIMENSIONS SHOWN ARE IN MILLIMETERS (MM)

0 400 800 1600
SCALE: 1: 20

0 2000 4000 8000
SCALE: 1: 100

US Army Corps of Engineers
Afghanistan Engineer District

SYMBOL	DESCRIPTION	DATE	APR

DESIGNED BY: PFF
DATE: 09-30-09
DWN BY: ECN
SUBMITTED BY: BAKER
CHK BY: NLJ
FILE NO.: ANPSDA-202XXX

Michael Baker Jr., Inc
A unit of Michael Baker Corporation
Airside Business Park
100 Airside Drive
Moon Township, PA 15108
www.mbakercorp.com

AFGHAN NATIONAL POLICE
STANDARD DESIGN
WAREHOUSE BUILDING

EXTERIOR ELEVATIONS

SHEET REFERENCE NUMBER:
A2

100% SUBMISSION

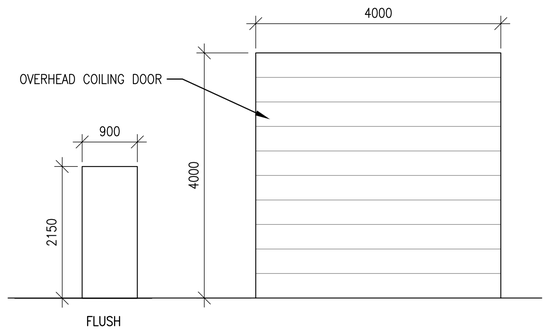

F R

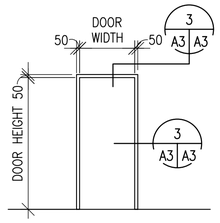

1

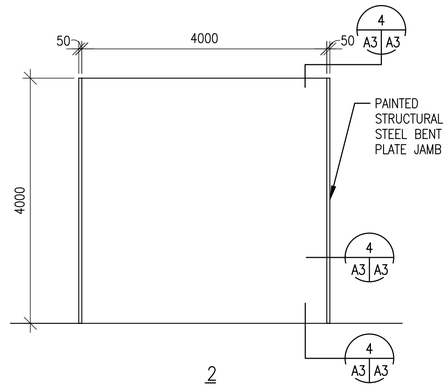

2

1 A3 A3 DOOR TYPES

SCALE: 1:50

2 A3 A3 FRAME TYPES

SCALE: 1:50

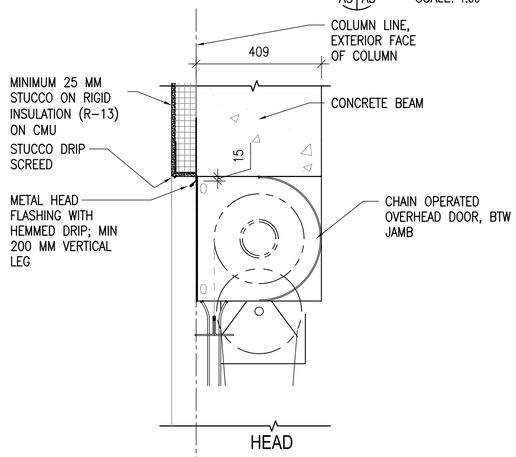

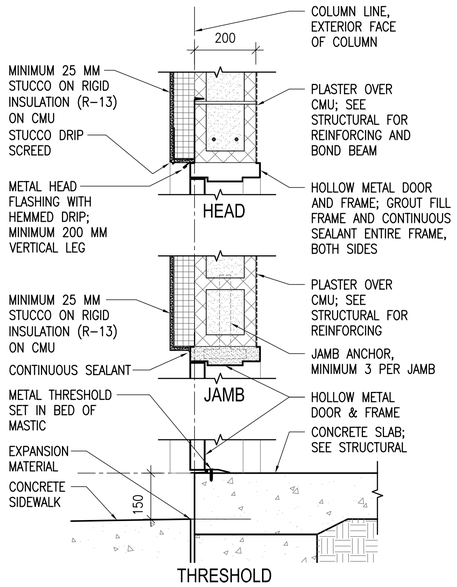

3 A3 A3 EXTERIOR DOOR DETAILS

SCALE: 1:10

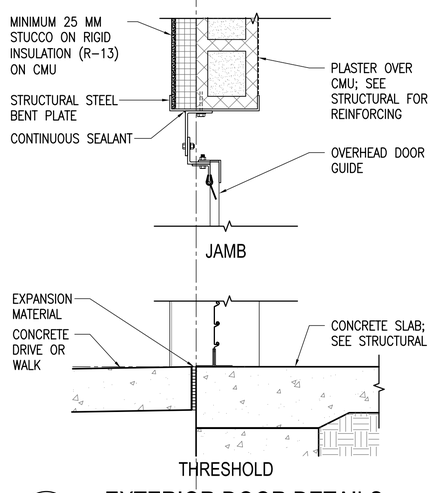

4 A3 A3 EXTERIOR DOOR DETAILS

SCALE: 1:10

DOOR TYPES NOTES:

1. INTERIOR AND EXTERIOR METAL DOORS AND FRAME COLORS SHALL MATCH ADJACENT WALL COLORS AS SELECTED BY THE CONTRACTING OFFICER.
2. HARDWARE SHALL BE HEAVY DUTY, COMMERCIAL GRADE, STAINLESS STEEL WITH A MATTE FINISH.
3. FRAMES, EXCEPT FIRE-RATED FRAMES, SHALL BE MOUNTED AND ADJUSTED IN ACCORDANCE WITH MANUFACTURER'S INSTRUCTIONS. FRAMES SHALL BE FASTENED WITH MINIMUM OF THREE FASTENING POINTS PER SIDE AT REGULAR INTERVALS.
4. DIMENSIONS SHOWN ON DOOR SCHEDULE ARE BASED UPON MODULAR MASONRY (OR ROUGH OPENING), HEIGHT OF 2200mm FOR STANDARD PERSONNEL DOORS. CONTRACTOR SHALL COORDINATE WITH DOOR SUPPLIER TO ensure THAT DIMENSIONS OF DOORS AND FRAMES PROVIDED ARE COMPATIBLE WITH DOOR OPENING DIMENSIONS.

HARDWARE TYPES:

HW-6 1-1/2 PR HINGES
1 EA LOCKSET,F04 ENTRY LOCK W/LEVERS. GRADE 1
1 EA DOOR CLOSER, C02061,LOW RESISTANCE
1 EA THRESHOLD J32130

UNLESS OTHERWISE NOTED, LINEAR DIMENSIONS SHOWN ARE IN MILLIMETERS (MM)

0 1000 2000 4000
SCALE: 1: 50

0 200 400 800
SCALE: 1: 10

US Army Corps of Engineers
Afghanistan Engineer District

SYMBOL	DESCRIPTION	DATE	APR

DESIGNED BY: PFF
DATE: 09-30-09
DWN BY: ECN
SUBMITTED BY: BAKER
CHK BY: NLJ
FILE NO.: ANPSDA-503XXX

Michael Baker Jr., Inc.
A unit of Michael Baker Corporation
Airside Business Park
100 Airside Drive
Moon Township, PA 15108
www.mbakercorp.com

AFGHAN NATIONAL POLICE
STANDARD DESIGN
WAREHOUSE BUILDING

DOOR, WINDOW & FINISH TYPES & DETAILS

SHEET REFERENCE NUMBER:
A3

100% SUBMISSION

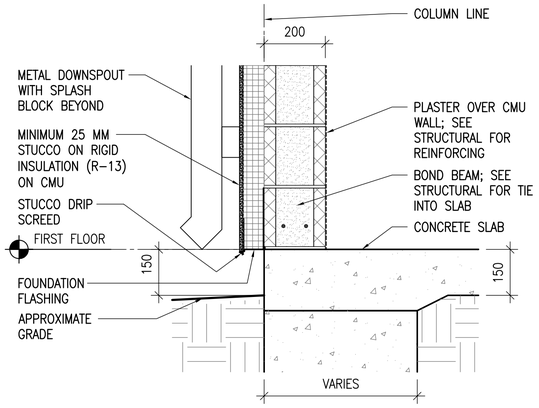

1 A4 A4 STUCCO BASE DETAIL

SCALE: 1:10

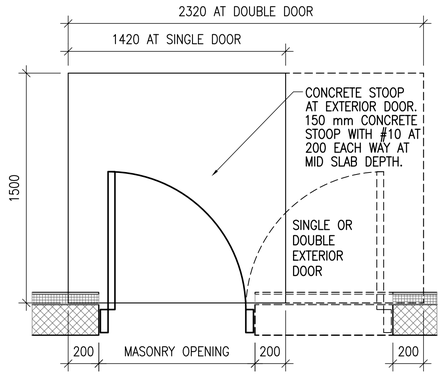

2 A4 A4 CONCRETE STOOP PLAN DETAIL

SCALE: 1:20

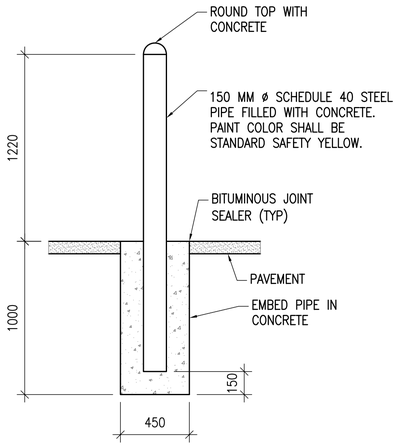

3 A4 A4 STEEL PIPE BOLLARD DETAIL

SCALE: 1:20

UNLESS OTHERWISE NOTED, LINEAR DIMENSIONS SHOWN ARE IN MILLIMETERS (MM)

0 200 400 800

SCALE: 1: 10

0 400 800 1600

SCALE: 1: 20

US Army Corps of Engineers

Afghanistan Engineer District

SYMBOL	DESCRIPTION	DATE	APR

DESIGNED BY: PFF	DATE: 09-30-09
DWN BY: ECN	SUBMITTED BY: BAKER
CHK BY: NLJ	FILE NO.: ANPSDA-504XXX

Michael Baker Jr., Inc
A unit of Michael Baker Corporation
Airside Business Park
100 Airside Drive
Moon Township, PA 15108
www.mbakercorp.com

AFGHAN NATIONAL POLICE
STANDARD DESIGN
WAREHOUSE BUILDING

SECTION DETAILS

SHEET REFERENCE NUMBER:

A4

100% SUBMISSION

POWER

- DISTRIBUTION PANELBOARD
- NEW PANELBOARD – SURFACE
- NEW PANELBOARD – RECESSED
- EXISTING PANELBOARD
- GENERATOR
- TVSS — TRANSIENT VOLTAGE SURGE SURPRESSOR
- TRANSFORMER (DRAWN TO SIZE)
- PS — POWER SUPPLY
- CP — CONTROL PANEL
- TC — TIME CLOCK
- TIM — ASTRONOMICAL TIME CLOCK– "SEE SPEC."
- R — RELAY WITH RATING AND NUMBER OF POLES AS NOTED ON DRAWINGS– "SEE SPEC."
- J — JUNCTION BOX
- J — JUNCTION BOX – CEILING
- PB — PULL BOX
- BD — BUS DUCT HORIZONTAL
- BUS DUCT VERTICAL
- EMERGENCY POWER OFF PUSH BUTTON
- NON–FUSIBLE SAFETY SWITCH
- FUSIBLE SAFETY SWITCH
- M — MOTOR
- $M — MOTOR STARTING SWITCH – 20A RATED
- $K — KEY SWITCH – 20A RATED
- FC — FAN COIL – FURNISHED BY MECHANICAL CONTRACTOR, ELECTRICAL CONTRACTOR SHALL INSTALL AND PROVIDE POWER CONNECTION
- UH — UNIT HEATER – FURNISHED BY MECHANICAL CONTRACTOR, ELECTRICAL CONTRACTOR SHALL INSTALL AND PROVIDE POWER CONNECTION
- D — JUNCTION BOX FOR CONNECTION TO GARBAGE DISPOSAL
- CF — LIGHT/HEATER/FAN – FURNISHED BY MECHANICAL CONTRACTOR, ELECTRICAL CONTRACTOR SHALL INSTALL AND PROVIDE POWER CONNECTION
- ELECTRIC WATER HEATER
- EPO — WEATHERPROOF / EXPLOSION PROOF EMERGENCY POWER OFF PUSH–BUTTON TO BE INTERCONNECTED WITH GENERATOR SHUT DOWN CONTROL
- CF — CEILING FAN – REFER TO SPECIFICATION SECTION 26 20 00

RECEPTACLES

- DUPLEX 20A BRITISH STANDARD UNSWITCHED SOCKETS
- GF — DUPLEX 20A BRITISH STANDARD UNSWITCHED SOCKETS – 10mA GROUND FAULT INTERRUPTER TYPE
- WP — DUPLEX 20A BRITISH STANDARD UNSWITCHED SOCKETS – 10mA GROUND FAULT INTERRUPTER TYPE WITH WEATHERPROOF COVER
- EXP — DUPLEX 20A BRITISH STANDARD UNSWITCHED SOCKETS – EXPLOSION PROOF
- * — INDICATES MOUNT DEVICE ABOVE COUNTER TOP

LIGHTNING PROTECTION

- AIR TERMINAL 20mm O.D. X 4m SOLID COPPER, NICKEL PLATED ON ADHESIVE BASE.
- EQ — EQUIPMENT AIR TERMINAL
- TEST WELL WITH GROUND ROD(S)
- GROUND ROD
- G — GROUND PLATE
- G — MAIN GROUND CONDUCTER CONCEALED WITHIN CONSTRUCTION
- G — MAIN GROUND CONDUCTOR EXPOSED ON EXPOSED ON BUILDING EXTERIOR SURFACE
- G — GROUND CONDUCTOR CAD WELDED TO GROUND CABLE OR EQUIPMENT
- G — GROUND CONDUCTOR CAD WELDED TO BUILDING STEEL COLUMN
- GROUND ROD TRIPOD, SPACED 10 FEET APART.
- LEVEL TO LEVEL CABLE

LIGHTING

- LIGHTING FIXTURE – SEE FIXTURE SCHEDULE FOR MORE INFORMATION
- LIGHTING FIXTURE – SEE FIXTURE SCHEDULE FOR MORE INFORMATION
- DOWNLIGHT
- LIGHTING FIXTURE ON NORMAL/EMERGENCY
- WALL MOUNTED LIGHT FIXTURE
- E — EXIT SIGN – DIRECTIONAL ARROWS AS INDICATED ON DRAWINGS
- B — BATTERY PACK WITH HEADS AS INDICATED ON DRAWINGS
- REMOTE HEAD FOR BATTERY PACK
- $ — SINGLE POLE SWITCH – 20A RATED
- $3 — 3–WAY SWITCH – 20A RATED
- $4 — 4–WAY SWITCH – 20A RATED
- PC — PHOTOCELL VOLTAGE TO MATCH CIRCUITRY
- LC — LIGHTING CONTACTOR
- POLE MOUNTED SITE LIGHTING FIXTURE– NUMBER OF FIXTURES PER POLE AS INDICATED ON DRAWINGS
- EXTERIOR DIRECTIONAL LIGHTING FIXTURE
- a — SMALL CASE LETTERS REPRESENTS LAMP(S) / SWITCHES. WHEN USED WITH AN OCCUPANCY SENSOR THIS INDICATES SENSOR WITH MANUAL OVERRIDE SWITCH

TELECOMMUNICATIONS

- TELEPHONE OUTLET(S) @ 18" AFF. U.N.O. WITH 3/4" RACEWAY TERMINATED ABOVE NEAREST ACCESSIBLE CEILING OR TO TELEPHONE TERMINAL BOARD IF NO ACCESSIBLE CEILING AVAILABLE. SEE TELE/DATA RISER DIAGRAM FOR OUTLET AND CABLE DESCRIPTION
- DATA OUTLET(S) @ 18" AFF. U.N.O. WITH 3/4" RACEWAY TERMINATED ABOVE NEAREST ACCESSIBLE CEILING OR TO DATA EQUIPMENT RACK IF NO ACCESSIBLE CEILING AVAILABLE. SEE TELE/DATA RISER DIAGRAM FOR OUTLET AND CABLE DESCRIPTION

TELECOMMUNICATIONS (CONTINUED)

- COMBINATION TELEPHONE/DATA OUTLET(S) @ 18" AFF. U.N.O. WITH 1" RACEWAY TERMINATED ABOVE NEAREST ACCESSIBLE CEILING OR TO TELE/DATA TERMINAL AREA IF NO ACCESSIBLE CEILING AVAILABLE. SEE TELE/DATA RISER DIAGRAM FOR OUTLET AND CABLE DESCRIPTION
- W — WALL MTD. TELEPHONE OUTLET WITH 3/4" RACEWAY TERMINATED ABOVE NEAREST ACCESSIBLE CEILING OR TO TELEPHONE TERMINAL BOARD IF NO ACCESSIBLE CEILING AVAILABLE. SEE TELE/DATA RISER DIAGRAM FOR OUTLET AND CABLE DESCRIPTION
- (x)T — INDICATES NUMBER OF TELEPHONE OUTLET(S) AND ASSOCIATED CABLING
- (x)D — INDICATES NUMBER OF DATA OUTLET(S) AND ASSOCIATED CABLING
- (x)TF — INDICATES NUMBER OF TELEPHONE OUTLETS AND ASSOCIATED CABLING WITH 1 OUTLET AND CABLE DEDICATED FOR FAX

SINGLE LINE SYMBOLS

- SWITCH
- BREAKER
- FUSE
- TRANSFORMER
- CAPACITOR
- GROUND
- CONTACT (NORMALLY OPEN)
- CONTACT (NORMALLY CLOSED)
- AUTOMATIC TRANSFER SWITCH
- MANUAL DOUBLE THROW SWITCH
- CURRENT TRANSFORMER
- INDICATES NEW ELECTRICAL EQUIPMENT
- C — INDICATES NEW CONTROL WIRING AND CONDUIT
- EQUIPMENT OUTLINE

MISCELLANEOUS

- BRANCH CIRCUIT WIRING CONCEALED ABOVE CEILINGS, SURFACE MOUNTED ON WALLS
- BRANCH CIRCUIT WIRING – #10 AWG
- BRANCH CIRCUIT WIRING – UNDER FLOOR
- HOME RUN BACK TO PANEL
- CONDUIT TURNED DOWN
- CONDUIT TURNED UP
- LV — LOW VOLTAGE WIRING AND CONDUIT
- CT–X — CABLE TRAY ("X" DENOTES WIDTH)
- INDICATES CONTINUATION OF LINE

FIRE ALARM

- FACP — FIRE ALARM CONTROL PANEL WITH BATTERY BACKUP
- F — FIRE ALARM PULL STATION

FIRE ALARM (CONTINUED)

- F — FIRE ALARM STROBE – WALL MOUNTED
- F — FIRE ALARM AUDIBLE/STROBE – WM
- F — FIRE ALARM HORN/STROBE – WM
- S — SMOKE DETECTOR
- H — HEAT DETECTOR CEILING MOUNTED
- D — DUCT DETECTOR – PROVIDED BY EC, INSTALLED BY MC AND CONNECTED BY EC

DENOTATIONS & ABBREVIATIONS

AFF	ABOVE FINISHED FLOOR
C	CEILING MOUNTED
E	EMERGENCY
EC	ELECTRICAL CONTRACTOR
EPO	EMERGENCY POWER OFF
EXP	EXPLOSION PROOF
F	FIRE ALARM
FF	FLUSH FLOOR MOUNTED
FL	FLUORESCENT
FO	FIBER OPTIC
FSS	FUSED SAFETY SWITCH
G	GROUND FAULT INTERRUPTER
GC	GENERAL CONTRACTOR
HOA	HAND–OFF AUTO
I	INFRARED
ICD	INCANDESCENT
IG	ISOLATED GROUND
K	KEY
LV	LOW VOLTAGE
M	MOTOR
MC	MECHANICAL CONTRACTOR
NE	NORMAL/EMERGENCY
NFSS	NON–FUSED SAFETY SWITCH
PA	PAGING SYSTEM
PLC	PLUMBING CONTRACTOR
REL	RELOCATE
RED	RELOCATED
SL	SINGLE LINE
SS	SURGE SUPPRESSION
T	TELEPHONE
TL	TWIST LOCK

DENOTATIONS & ABBREVIATIONS (CONT.)

TP	TAMPER PROOF
UE	UNDERGROUND ELECTRIC
UF	UNDERGROUND FIBER
UT	UNDERGROUND TELEPHONE
W	WALL MOUNTED
WG	WIRE GUARD
WP	WEATHERPROOF
WPG	WEATHERPROOF/GROUND FAULT INTERRUPTER
WT	WATER TIGHT

GENERAL PROJECT NOTES:

G1. UNLESS OTHERWISE NOTED, PROVIDE ALL EQUIPMENT SHOWN ON THE PLANS. THE ELECTRICAL CONTRACTOR SHALL COORDINATE ALL SYMBOLS SHOWN ON THE PLANS WITH THE SYMBOL LIST. IT SHALL BE THE RESPONSIBILITY OF THE CONTRACTOR TO VERIFY THE INTENT OF ANY SYMBOL THAT IS SHOWN ON THE PLANS AND NOT INDICATED ON THE SYMBOL LIST WITH THE ENGINEER PRIOR TO BID.

G2. COORDINATE THE FINAL LOCATIONS OF ALL LIGHT FIXTURES WITH THE ARCHITECT'S REFLECTED CEILING PLANS. REPORT ANY DISCREPANCIES TO THE ARCHITECT PRIOR TO INSTALLATION.

G3. THE CONTRACTOR SHALL VERIFY THE LOCATION OF ALL UNDERGROUND UTILITIES WITHIN THE CONSTRUCTION AREA THREE (3) WORKING DAYS NOTICE BEFORE COMMENCE DIGGING. NOTIFY THE LOCAL OR STATE AUTHORITY HAVING JURISDICTION AND WAIT THE REQUIRED TIME BEFORE COMMENCING TO DIG.

G4. THE CONTRACTOR SHALL COORDINATE CONDUIT RUNS, CABLE TRAY, LIGHTING FIXTURES AND OTHER EQUIPMENT LOCATIONS WITH THE OTHER TRADE CONTRACTORS TO AVOID CONFLICTS.

G5. WHERE VOLTAGES AND FREQUENCIES ON THE DRAWINGS AND IN THE SPECIFICATIONS DIFFER FROM THE LOCAL ONES, ALL WORK SHALL BE PERFORMED USING THE LOCAL VOLTAGES AND FREQUENCIES.

G6. THE MINIMUM WIRE SIZE ON THE PROJECT SHALL BE 4mm2. THE MINIMUM CONDUIT SIZE SHALL BE 20mm. THE MINIMUM BREAKER SIZE SHALL BE 20 AMPS.

G7. THE CONTRACTOR SHALL PUT A MAXIMUM OF 6 DUPLEX SOCKETS ON A 20A SINGLE POLE CIRCUIT.

G8. WHERE THE 1010 SCOPE REVIEW, 1015 TECHNICAL REVIEW, DRAWINGS, AND SPECIFICATIONS DIFFER FROM AMERICAN CODES OR STANDARDS THE 1010, 1015, DRAWINGS, AND SPECIFICATIONS SHALL RULE.

G9. WORK FOR THE AMMUNITION SUPPLY POINT SHALL BE DONE IN ACCORDANCE WITH DEPARTMENT OF DEFENSE STANDARD DOD 6055.9–STD.

G10. ALL CONDUIT AND DEVICES SHALL BE SURFACE MOUNTED UNLESS OTHERWISE INDICATED.

US Army Corps of Engineers
Afghanistan Engineer District

SYMBOL	DESCRIPTION	DATE	APR

DESIGNED BY: JRG
DWN BY: JRG
CHK BY: JRG
DATE: 09-30-09
SUBMITTED BY: BAKER
FILE NO.: ANPSDE-000XXX

Michael Baker Jr., Inc
A unit of Michael Baker Corporation
Airside Business Park
100 Airside Drive
Moon Township, PA 15108
www.mbakercorp.com

AFGHAN NATIONAL POLICE
STANDARD DESIGN
WAREHOUSE BUILDING

ELECTRICAL SYMBOLS AND ABBREVIATIONS

SHEET REFERENCE NUMBER:
E0

100% SUBMISSION

GENERAL NOTES:

1. REFER TO DRAWING #E0 FOR THE ELECTRICAL SYMBOLS LIST.
2. EXIT SIGNS SHALL BE WIRED AHEAD OF ANY LOCAL SWITCHING ON CIRCUITS.
3. REFER TO DRAWING #E3 FOR THE LIGHTING FIXTURE SCHEDULE.
4. REFER TO DRAWING #E2 FOR THE POWER RISER.
5. REFER TO DRAWING #E4 FOR PANEL SCHEDULES.
6. LIGHT FIXTURES INDICATED AS EMERGENCY SHALL BE PROVIDED WITH A BATTERY BACKUP BALLAST.
7. COORDINATE EXACT MOUNTING LOCATION OF DISCONNECTING MEANS FOR MECHANICAL AND PLUMBING EQUIPMENT IN THE FIELD.
8. FUSIBLE SAFETY SWITCHES THAT ARE NOT OTHERWISE IDENTIFIED SHALL BE 380V, 1P, 30A FUSED SAFETY SWITCHES WITH 20A FUSES.

NUMBERED NOTES:

(1) PANEL R1.

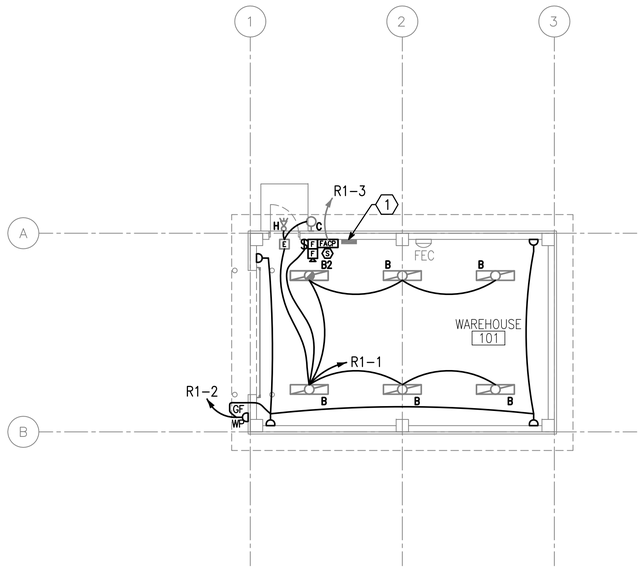

1 / E1 E1 LIGHTING AND POWER PLAN

SCALE: 1:100

N

UNLESS OTHERWISE NOTED, LINEAR DIMENSIONS SHOWN ARE IN MILLIMETERS (MM)

1 0 1 2 3 4 5 6 7 8 9

1:100

US Army Corps of Engineers

Afghanistan Engineer District

SYMBOL	DESCRIPTION	DATE	APR

DESIGNED BY: JRG	DATE: 09-30-09		
DWN BY: JRG	SUBMITTED BY: BAKER		
CHK BY: JRG	FILE NO.: ANPSDE-101XXX		

Michael Baker Jr., Inc
A unit of Michael Baker Corporation
Airside Business Park
100 Airside Drive
Moon Township, PA 15108
www.mbakercorp.com

AFGHAN NATIONAL POLICE
STANDARD DESIGN
WAREHOUSE BUILDING

LIGHTING AND POWER PLAN

SHEET REFERENCE NUMBER:

E1

100% SUBMISSION

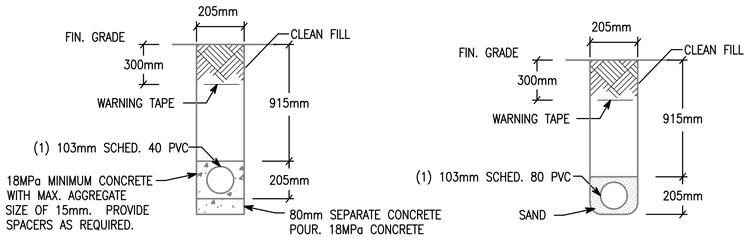

NOTE: PVC CONDUIT SHALL BE DIRECT BURIED SCHEDULE 80 FOR NO TRAFFIC AREAS AND CONCRETE-ENCASED SCHEDULE 40 FOR UNDER ROADWAYS OR TRAFFIC AREAS.

1 E2 E2 TYPICAL DUCT BANK DETAILS FOR CONDUIT IN SAND OR CONCRETE

SCALE: N.T.S.

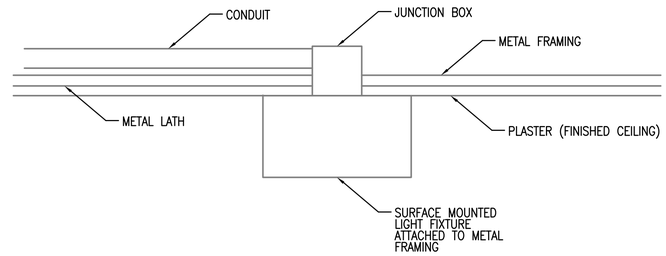

2 E2 E2 TYPICAL DETAIL FOR SURFACE MOUNTED LIGHT FIXTURES

SCALE: N.T.S.

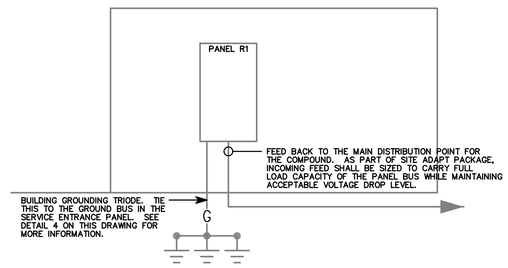

3 E2 E2 WAREHOUSE RISER DIAGRAM

SCALE: N.T.S.

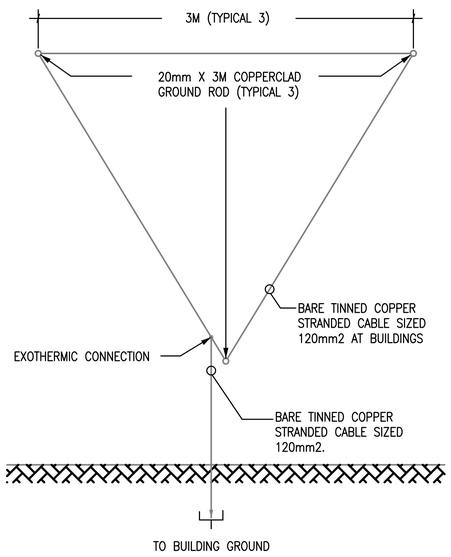

4 E2 E2 GROUND TRIPOD SYSTEM DETAIL - PLAN

SCALE: N.T.S.

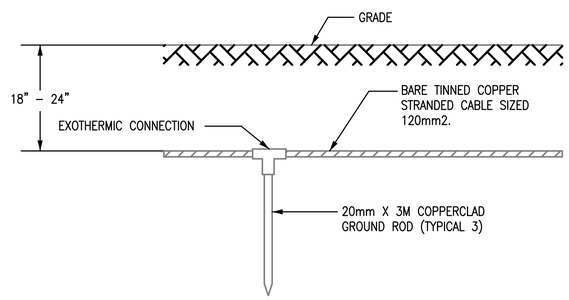

5 E2 E2 GROUND TRIPOD SYSTEM DETAIL - ELEVATION

SCALE: N.T.S.

US Army Corps of Engineers

Afghanistan Engineer District

SYMBOL	DESCRIPTION	DATE	APR

DESIGNED BY: JRG
DATE: 09-30-09
DWN BY: JRG
SUBMITTED BY: JRG
CHK BY: JRG
FILE NO.: ANPSBA-B2XXX

Michael Baker Jr., Inc.
A unit of Michael Baker Corporation
Airside Business Park
100 Airside Drive
Moon Township, PA 15108
www.mbakercorp.com

AFGHAN NATIONAL POLICE
STANDARD DESIGN
WAREHOUSE BUILDING

DETAILS

SHEET REFERENCE NUMBER:

E2

100% SUBMISSION

FIXTURE MARK 'B'

WET LOCATION WRAP AROUND SURFACE/PENDANT MOUNTED FLUORESCENT FIXTURE WITH PRISMATIC ACRYLIC LENS AND ELECTRONIC BALLAST.

FIXTURE MARK 'B2':
SAME FIXTURE AS 'B' WITH EMERGENCY BALLAST.

FIXTURE MARK 'C'

INCANDESCENT ONE PIECE WITH APPROVED LENS, STABILIZED HIGH IMPACT POLY CARBONATE

FIXTURE MARK 'H'

REMOTE HEAD EXTERIOR LIGHT HEAD POWERED FROM EXIT SIGN BATTERY– 12V DOUBLE HEAD CORROSION RESISTANT WITH UL34 WEATHERPROOF CONSTRUCTION

FIXTURE MARK 'E'

UNIVERSAL MOUNT ENGINEER GRADE THERMOPLASTIC HOUSING EXIT SIGN WITH LED LAMPS, RED LETTERS 6" IN HEIGHT WITH ARROWS AS INDICATED, WITH 12V CADMIUM BATTERY

LIGHTING FIXTURE SCHEDULE

FIXTURE MARK	STYLE NUMBER AND TYPE	NUMBER AND TYPE OF LAMPS	VOLTAGE	MOUNTING	NOTES
B	WET LOCATION WRAP AROUND SURFACE/PENDANT MOUNTED FLUORESCENT FIXTURE WITH PRISMATIC ACRYLIC LENS AND ELECTRONIC BALLAST	(2) 32W 3500K	220V – 1ø 50HZ	PENDANT MOUNTED FROM SLOPED CEILINGS	FURNISHED WITH ELECTRONIC BALLAST, VIRGIN ACRYLIC WRAP AROUND LENS.
B2	SAME AS FIXTURE 'B' WITH EMERGENCY BALLAST	(2) 32W 3500K	220V – 1ø 50HZ	PENDANT MOUNTED FROM SLOPED CEILINGS	FURNISHED WITH ELECTRONIC BALLAST, VIRGIN ACRYLIC WRAP AROUND LENS. EMERGENCY BALLAST WITH SELF TEST SWITCH.
C	INCANDESCENT ONE PIECE W/ APPROVED LENS STABILIZED HIGH IMPACT POLY CARBONATE.	(1) A19 – 100W INCANDESCENT	220V – 1ø 50HZ	WALL MOUNTED ABOVE EXTERIOR DOORS	
H	REMOTE HEAD EXTERIOR LIGHT HEAD POWERED FROM EXIT SIGN BATTERY– 12V DOUBLE HEAD CORROSION RESISTANT WITH UL34 WEATHERPROOF CONSTRUCTION	(2) 12W/12V HALOGEN LAMP	12V – 1ø 50HZ	EXTERIOR WALL MOUNTED AT TOP OF DOOR HEIGHT	
E	UNIVERSAL MOUNT ENGINEER GRADE THERMOPLASTIC HOUSING EXIT SIGN WITH LED LAMPS, RED LETTERS 6" IN HEIGHT WITH ARROWS AS INDICATED, WITH 12V CADMIUM BATTERY WITH REMOTE HEAD CAPABILITY	LED LAMPS	220V – 1ø 50HZ	UNIVERSAL MOUNTING	

US Army Corps of Engineers
Afghanistan Engineer District

SYMBOL	DESCRIPTION	DATE	APR

DESIGNED BY: JRG
DATE: 09-30-09
DWN BY: JRG
SUBMITTED BY: BAKER
CHK BY: JRG
FILE NO.: ANPSDE-603XXX

Michael Baker Jr., Inc.
A unit of Michael Baker Corporation
Airside Business Park
100 Airside Drive
Moon Township, PA 15108
www.mbakercorp.com

AFGHAN NATIONAL POLICE
STANDARD DESIGN
WAREHOUSE BUILDING

LIGHT FIXTURE SCHEDULE

SHEET REFERENCE NUMBER:
E3

100% SUBMISSION

PANELBOARD R1 SURFACE MOUNTED _____ ASYM. A.I.C. MIN.

_____ AMP. MAIN LUGS (OR) 100 AMP. MAIN BREAKER W/ 100 AMP. TRIP

CIRCUIT BREAKER TYPE 380/220 VOLTS 3 PHASE 4 WIRE 50 HZ 100 AMP. BUS

CKT. NO.	TRIP AMPS	NO. POLES	WIRE MM 2	GND MM2	CONDUIT MM	LOAD SERVED	LOAD-V.A. AØ	LOAD-V.A. BØ	LOAD-V.A. CØ	LOAD-V.A. AØ	LOAD-V.A. BØ	LOAD-V.A. CØ	LOAD SERVED	CONDUIT MM	GND MM2	WIRE MM2	NO. POLES	TRIP AMPS	CKT. NO.
1	20	1	4.0	4.0	20	LIGHTING - 101	0.6			0.6			RECEPTACLES - 101	20	4.0	4.0	1	20	2
3	20	1	4.0	4.0	20	F. A. C. P.		0.5					SPARE				1	20	4
5	20	1				SPARE							SPARE				1	20	6
7	20	1				SPARE							SPARE				1	20	8
9	20	1				SPARE							SPARE				1	20	10
11	20	1				SPARE							SPARE				1	20	12
							0.6	0.5	0.0	0.6	0.0	0.0							

TOTAL CONN. LOAD PER PHASE (KVA): AØ 1.2 BØ 0.5 CØ 0.0

TOTAL CONN. LOAD 1.7 KVA. 70 % DEMAND = ESTIMATED DEMAND LOAD 1.2 SUPPLIED FROM MAIN SWITCHGEAR DISTRIBUTION

• MAIN BREAKER SHALL BE 3P EARTH GROUND TYPE

US Army Corps of Engineers

Afghanistan Engineer District

SYMBOL	DESCRIPTION	DATE	APR

DESIGNED BY: JRG
DWN BY: JRG
CHK BY: JRG
DATE: 09-30-09
SUBMITTED BY: BAKER
FILE NO.: ANPSDE-604XXX

Michael Baker Jr., Inc
A unit of Michael Baker Corporation
Airside Business Park
100 Airside Drive
Moon Township, PA 15108
www.mbakercorp.com

AFGHAN NATIONAL POLICE
STANDARD DESIGN
WAREHOUSE BUILDING

PANEL SCHEDULES AND RISER DIAGRAM

SHEET REFERENCE NUMBER:
E4

100% SUBMISSION

AFGHAN NATIONAL POLICE

STANDARD BUILDING DESIGNS

TRASH POINT

SHEET INDEX

G1	COVER SHEET
C1	TRASH POINT, LAYOUT, ELEVATION AND DETAILS

US ARMY CORPS OF ENGINEERS
AFGHANISTAN ENGINEER DISTRICT

SYMBOL	DESCRIPTION	DATE	APPR.

SYMBOL	DESCRIPTION	DATE	APPR.

U.S. ARMY ENGINEER DISTRICT, AFGHANISTAN
CORPS OF ENGINEERS
APO AE 96338

DESIGNED BY: ___ DWN BY: ___ CKD BY: ___ REVIEWED BY: ___ SUBMITTED BY: ___

DATE: XX-XX-XX
DESIGN FILE NO.: ___
DRAWING CODE: ___
FILE NAME: ___
PLOT SCALE: ___
PLOT DATE: XX-XX-XX
REV. ___

ENGINEERING AND CONSTRUCTION DIVISION

AFGHAN NATIONAL POLICE
STANDARD DESIGN
TRASH POINT

TRASH POINT LAYOUT ELEVATIONS, & DETAILS

SHEET REFERENCE NUMBER:

G1

SHEET 1 OF 2

A1 Size 594mm x 841mm

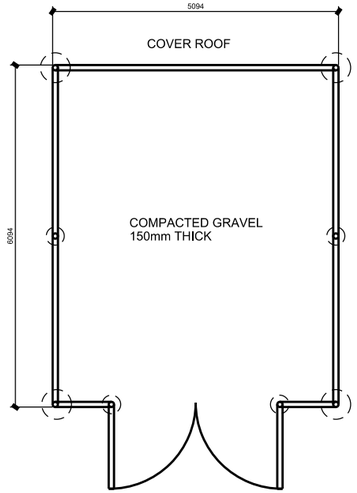

1 FLOOR PLAN
TS-C-101 SCALE: 1=50

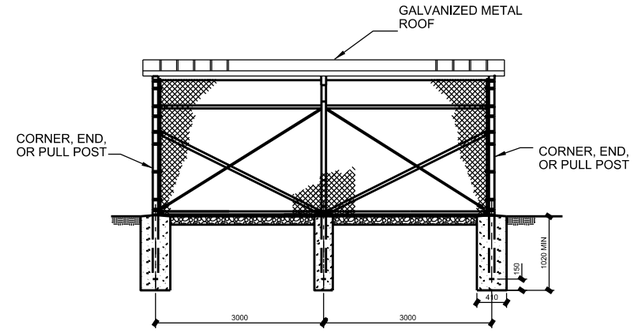

2 FRONT ELEVATION
TS-C-101 SCALE: 1=50

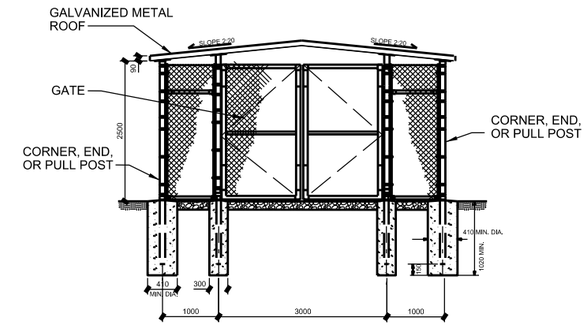

3 SIDE ELEVATION
TS-C-101 SCALE: 1=50

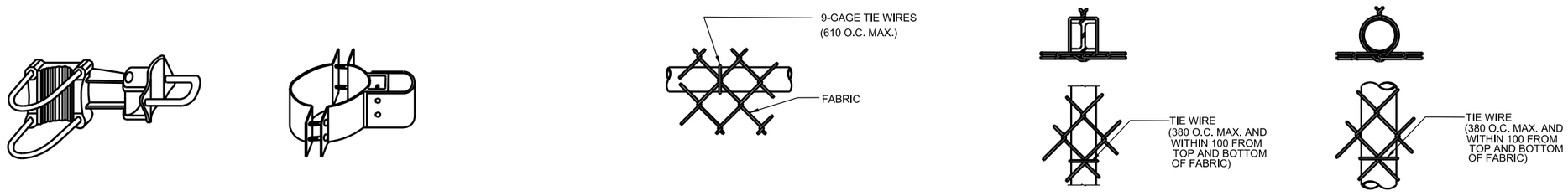

STANDARD HINGE

TOP OR BRACE RAIL ATTACHMENT

H-BEAM

ROUND POST

4 LINE POSTS ATTACHMENTS
TS-C-101 NTS

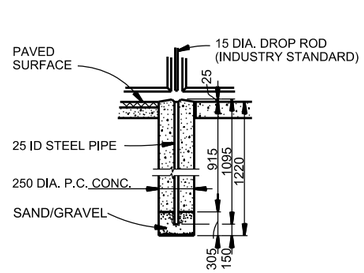

DROP ROD FOUNDATION

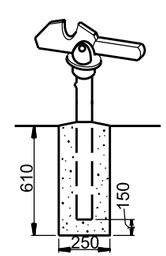

GATE KEEPER
(TO HOLD GATE OPEN)

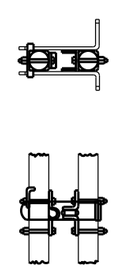

LATCH ASSEMBLY

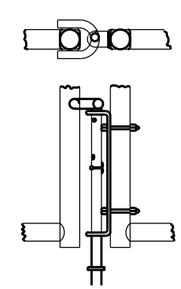

DROP ROD ASSEMBLY

5 SWING GATE DETAILS
TS-C-101 NTS

US ARMY CORPS
OF ENGINEERS
AFGHANISTAN
ENGINEER DISTRICT

SYMBOL	DESCRIPTION	DATE	APPR.	SYMBOL	DESCRIPTION	DATE	APPR.

REV. ___
DATE: XX-XX-XX
DESIGN FILE NO.
DRAWING CODE:
DESIGNED BY:
DWN BY: CKD BY:
REVIEWED BY:
SUBMITTED BY:
FILE NAME:
PLOT SCALE:
PLOT DATE: XX-XX-XX

U.S. ARMY ENGINEER DISTRICT, AFGHANISTAN
CORPS OF ENGINEERS
APO AE 96338

ENGINEERING AND
CONSTRUCTION DIVISION

AFGHAN NATIONAL POLICE
STANDARD DESIGN
TRASH POINT

TRASH POINT LAYOUT
ELEVATIONS, & DETAILS

SHEET
REFERENCE
NUMBER:
C1

SHEET 2 OF 2

A1 Size 594mm x 841mm

ENGINEERING AND CONSTRUCTION DIVISION
US ARMY ENGINEER DISTRICT, AFGHANISTAN
APO AE, 09356

ARMS STORAGE

CONTRACT NO.

PROJECT LOCATION, AFGHANISTAN

SECTION/DETAIL CROSS REFERENCING CONVENTIONS

DETAIL SYMBOL

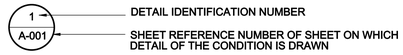

SECTION SYMBOL

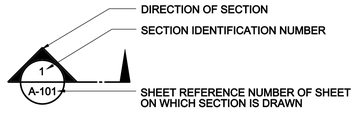

DRAWING TITLE

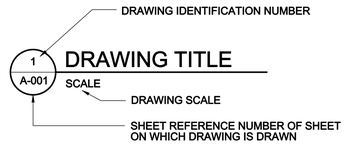

INTERIOR ELEVATION SYMBOL

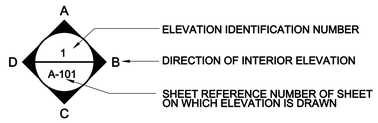

EXTERIOR ELEVATION SYMBOL

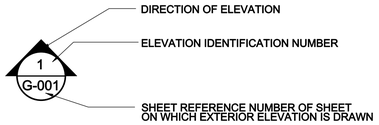

SCHEDULE OF DRAWINGS

SHEET NO	DWG CODE	SHEET REFERENCE NO	DESCRIPTION	REV STATUS
			GENERAL	
		T-001	TITLE SHEET & SCHEDULE OF DRAWINGS	
			STRUCTURAL	
		S-101	SLAB ON GRADE & FOUNDATION PLANS & SECTIONS	
			ARCHITECTURAL	
		A-101	FLOOR PLAN	
		A-102	ROOF PLAN	
		A-103	REFLECTED CEILING PLAN	
		A-201	ELEVATIONS & SECTIONS	
		A-701	LIFE SAFETY	
			MECHANICAL	
		M-101	MECHANICAL FLOOR PLAN & SCHEDULES	
			ELECTRICAL	
		E-101	LIGHTING, RECEPTACLE, & TELEPHONE-DATA SYSTEM PLANS	

PROJECT COORDINATION

U.S. ARMY ENGINEER DISTRICT, AFGHANISTAN

PROJECT MANAGER — DATE

CHIEF, DESIGN BRANCH — DATE

THIS PROJECT WAS DESIGNED BY AFGHANASTAN ENGINEER DISTRICT OF THE U.S ARMY CORPS OF ENGINEERS. THE INITIALS OR SIGNATURES AND REGISTRATION DESIGNATIONS OF INDIVIDUALS APPEAR ON THESE DOCUMENTS WITHIN THE SCOPE OF THEIR EMPLOYMENT AS REQUIRED BY ER 1110-1-8152.

US ARMY CORPS OF ENGINEERS AFGHANISTAN ENGINEER DISTRICT

SYMBOL	DESCRIPTION	DATE	APPR.	SYMBOL	DESCRIPTION	DATE	APPR.

DESIGNED BY: DWN BY: CKD BY: REVIEWED BY: SUBMITTED BY:
DATE: XX/XX/XX
DESIGN FILE NO.
DRAWING CODE:
FILE NAME: AS_T-001.dgn
PLOT SCALE:
PLOT DATE: XX-XX-XX
REV:

U.S. ARMY ENGINEER DISTRICT, AFGHANISTAN
CORPS OF ENGINEERS
APO AE 96338

ENGINEERING AND CONSTRUCTION DIVISION

TTITLE SHEET & SCHEDULE OF DRAWINGS

SHEET REFERENCE NUMBER:
T-001

A1 Size 594mm x 841mm

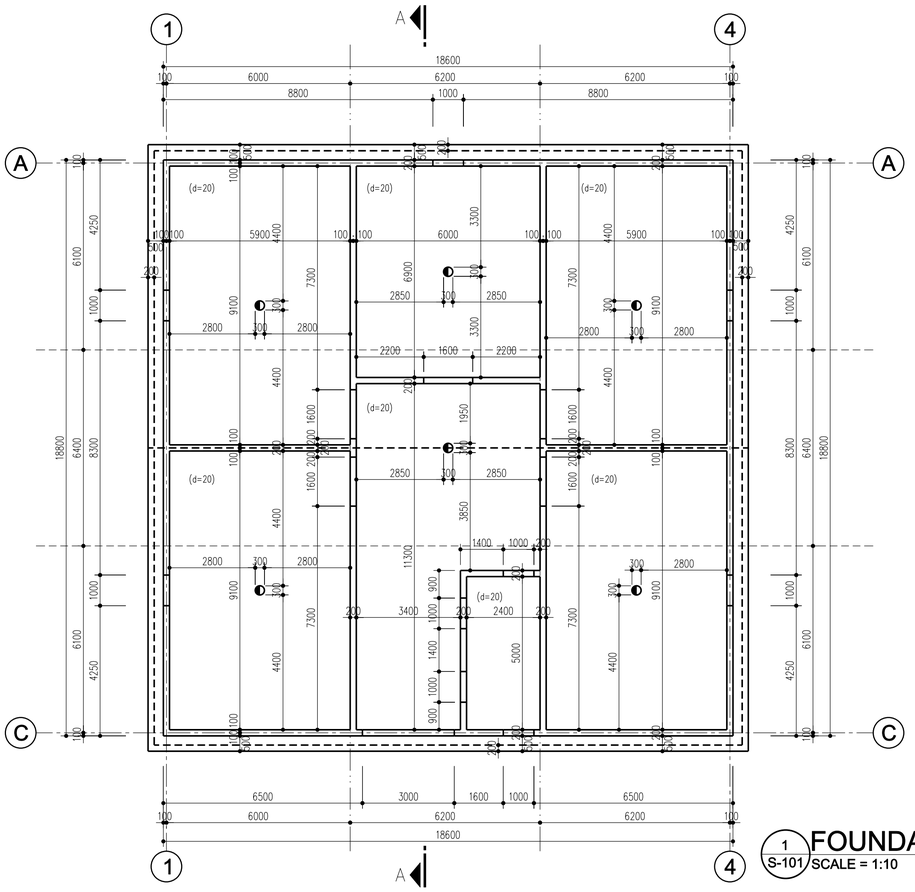

1 S-101 FOUNDATION FORMWORK PLAN
SCALE = 1:10

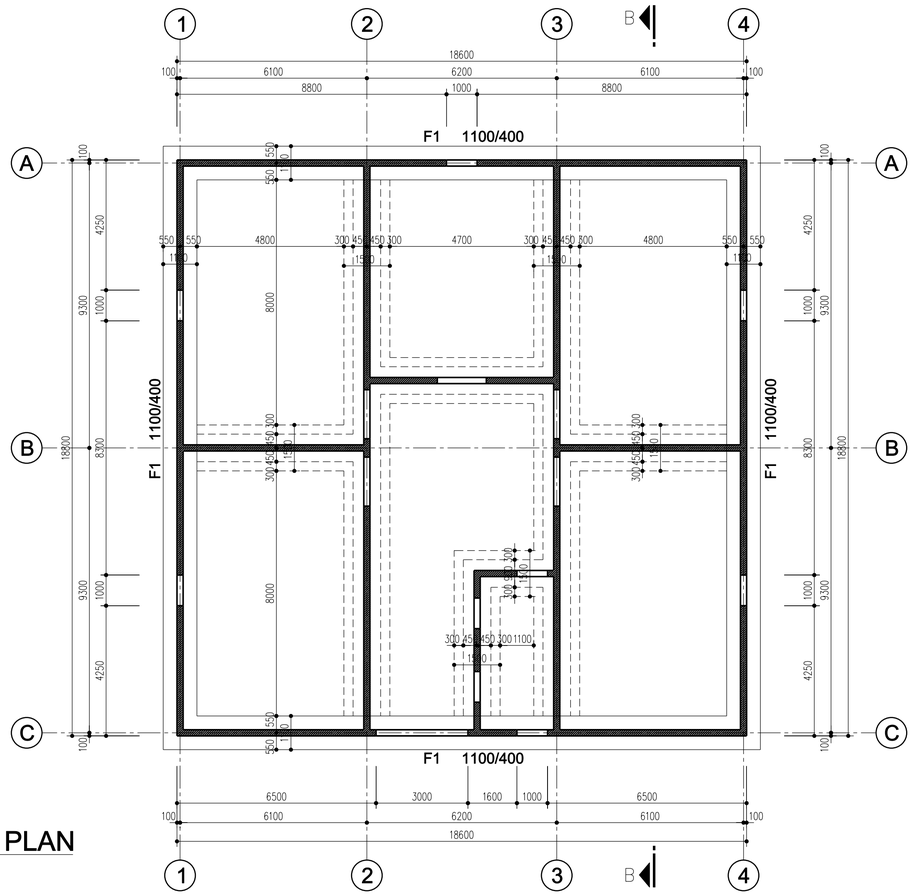

2 S-101 FOUNDATION PLAN
SCALE =1:10

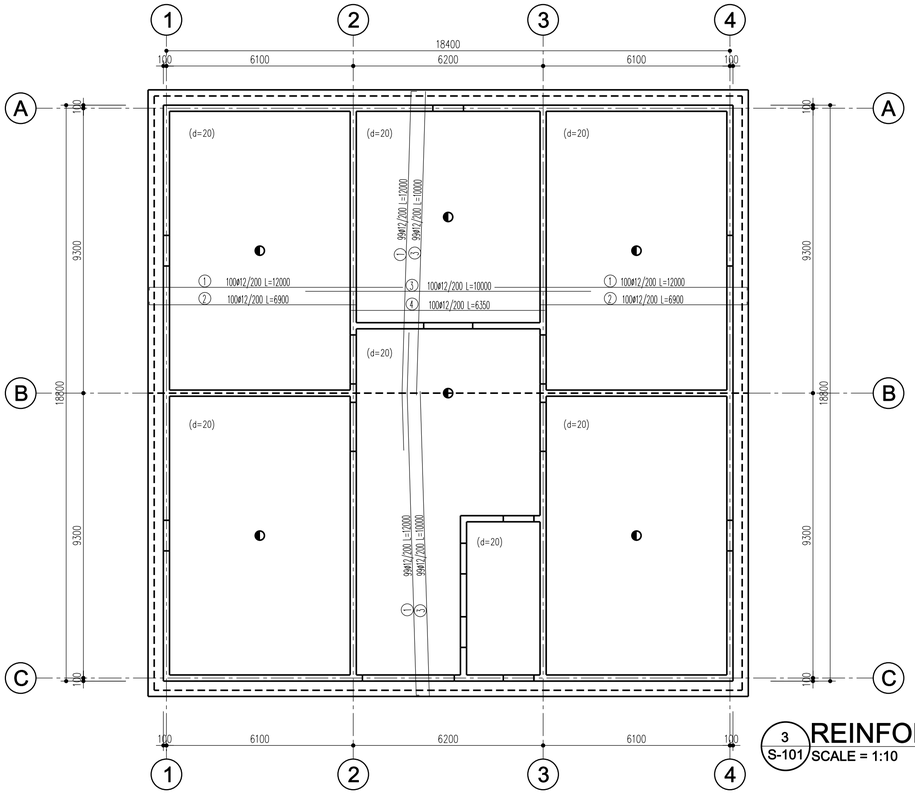

3 S-101 REINFORCEMENT PLAN
SCALE = 1:10

Design Criteria :
According to IBC 2003, ACI 318, ASTM

Reinforced Concrete Properties :
Concrete f'c = 210 kg/cm2 ; 21 MPa
Reinforcement: fy = 4218 kg/cm2 ; 415 MPa
Concrete Weight: gc = 24,5 kN/m3

Masonry Properties:
CMU Wall Weight: gcmu = 20 kN/m3
Blocks - ASTM C90 Type I (normal weight, moisture controlled)
Mortar - ASTM C270 Type S
Grout - ASTM C476 (Slump between 200mm and 250mm)

Steel Properties:
All structural steel conforms to ASTM A36
All connections are detailed in accordance with AISC standards
All connections are to be bolted, shop welded or field welded conforming to AWS D1.I-2002.

The following live loads were assumed in the design:
Roof Live Load 1.0 kN/m2
Roof Snow Load 1.00 kN/m2
Floor Live Load 2.0 kN/m2

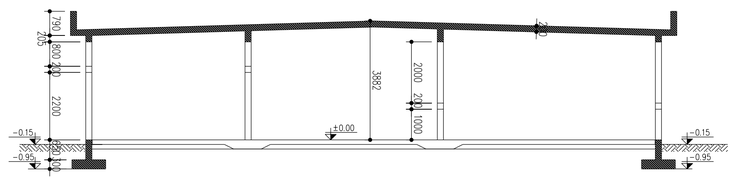

A S-101 SECTION A-A
SCALE = 1:10

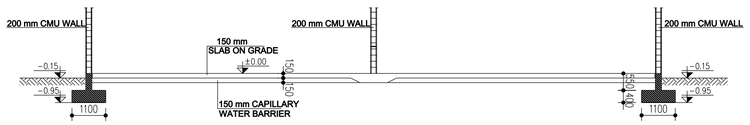

B S-101 SECTION B-B
SCALE = 1:10

CONSTRUCTION JOINT
CONTRACTION JOINT

REFER TO DP00-K-S08 FOR FOOTING, CMU WALL, BOND BEAM, SLAB ON GRADE AND THICKENED SLAB DETAILS

NOTE: ALL DIMENSIONS AND/OR DIMENSIONS SHOWN IN CALLOUTS/NOTES ARE IN MILLIMETERS UNLESS INDICATED OTHERWISE NOTED.

GRAPHIC SCALE
SCALE: 1 : 10

US ARMY CORPS OF ENGINEERS AFGHANISTAN ENGINEER DISTRICT

SYMBOL	DESCRIPTION	DATE	APPR.	SYMBOL	DESCRIPTION	DATE	APPR.

DESIGNED BY: DATE: REV:
DWN BY: XX/XX/XX CKD BY: DESIGN FILE NO.
REVIEWED BY: DRAWING CODE:
SUBMITTED BY: FILE NAME:
PLOT SCALE:
PLOT DATE: XX-XX-XX

U.S. ARMY ENGINEER DISTRICT, AFGHANISTAN
CORPS OF ENGINEERS
APO AE 96338

ENGINEERING AND CONSTRUCTION DIVISION

~~XXXXXXXXXX~~
~~XXXXXXXXXX~~
~~XXXXXXXXXX~~

FINISHING SCHEDULE

ROOM NUMBER	USAGE	NSM	FLOOR	WALL COVER	CEILING
25-100	ENTRANCE HALL	54.28 M²	F1	W1	–
25-101	OFFICE	12.00 M²	F1	W1	–
25-102	BATTALION ARMS ROOM	54.60 M²	F1	W1	–
25-103	BATTALION ARMS ROOM	54.60 M²	F1	W1	–
25-104	BATTALION ARMS ROOM	41.40 M²	F1	W1	–
25-105	BATTALION ARMS ROOM	54.60 M²	F1	W1	–
25-106	BATTALION ARMS ROOM	54.60 M²	F1	W1	–
	TOTAL	326.08 M²			

FINISHING SCHEDULE LEGEND

FLOOR

F1	SEALED CONCRETE	
F2	TERRAZZO 30X30 CM	NOT USED
F3	SMOOTH TERRAZZO 30X30 CM	NOT USED
F4	CERAMIC 33X33 CM (DIAGONAL)	NOT USED
F5	RAISED FLOOR	NOT USED

WALL COVER

W1	SEMI-GLOSS WHITE PAINT	
W2	CERAMIC H=200 CM	NOT USED
W3	CERAMIC H=180 CM	NOT USED
W4	CERAMIC H=120 CM	NOT USED

CEILING

C1	DRY WALL+SEMI GLOSS WHITE PAINT	NOT USED
C2	WATERPROOF DRY WALL+SEMİ GLOSS WHITE PAINT	NOT USED

WALL SYMBOLS

CMU WALL

DRY WALL

NOTES:

1-EXTERIOR WALLS AND SECURITY ZONE WALLS 20X40X20 CM CMU WALL.

2-INTERIOR PARTITION WALLS ONE LAYER 15 MM DRY WALL (TOTAL:105 MM) UNLESS OTHERWISE NOTED.

3-ALL DIMENSIONS ARE TO FACE OF CMU AND DRY WALLS UNLESS NOTED OTHERWISE.

4-ROOF IS SLOPE 2:12 METAL ROOF.

5-SEE CIVIL DRAWINGS FOR BUILDING COORDINATES AND FINISH FLOOR ELEVATION.

6-SEE STRUCTURAL DRAWINGS FOR SEISMIC JOINTS & CONSTRUCTION JOINTS.

7-FURNITURE IS OUT OF SCOPE.

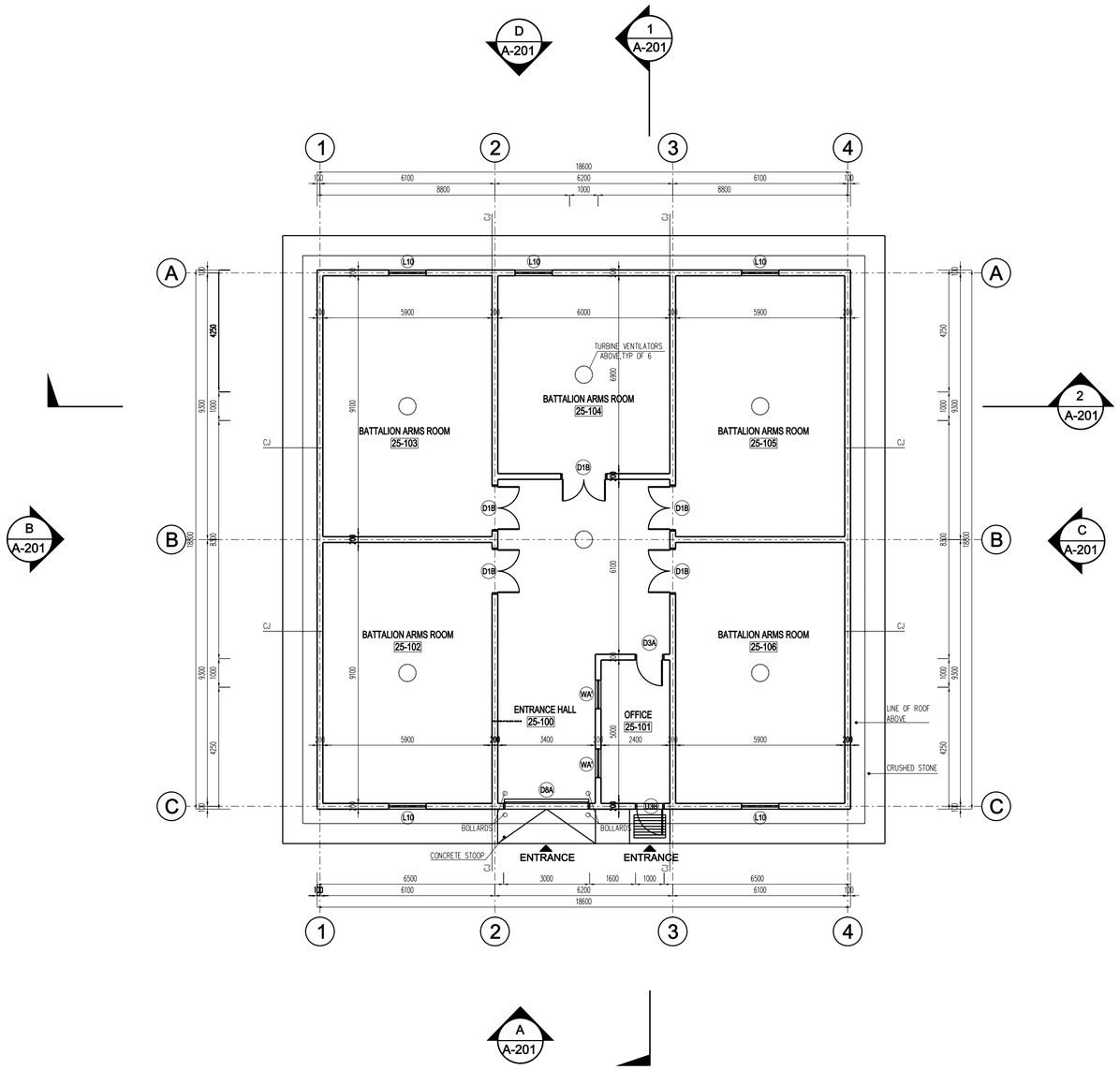

1 A-101 FLOOR PLAN
SCALE = 1:10

GRAPHIC SCALE

500 200 100 0 500 1000

SCALE: 1 : 10

NOTE: ALL DIMENSIONS AND/OR DIMENSIONS SHOWN IN CALLOUTS/NOTES ARE IN MILLIMETERS UNLESS INDICATED OTHERWISE NOTED.

US ARMY CORPS OF ENGINEERS AFGHANISTAN ENGINEER DISTRICT

SYMBOL	DESCRIPTION	DATE	APPR.	SYMBOL	DESCRIPTION	DATE	APPR.

DESIGNED BY: DATE: XX-XX-XX REV: —
DWN BY: CKD BY: DESIGN FILE NO.
REVIEWED BY: DRAWING CODE:
SUBMITTED BY: FILE NAME:
PLOT SCALE:
PLOT DATE: XX-XX-XX

U.S. ARMY ENGINEER DISTRICT, AFGHANISTAN
CORPS OF ENGINEERS
APO AE 96338

ENGINEERING AND CONSTRUCTION DIVISION

XXXX

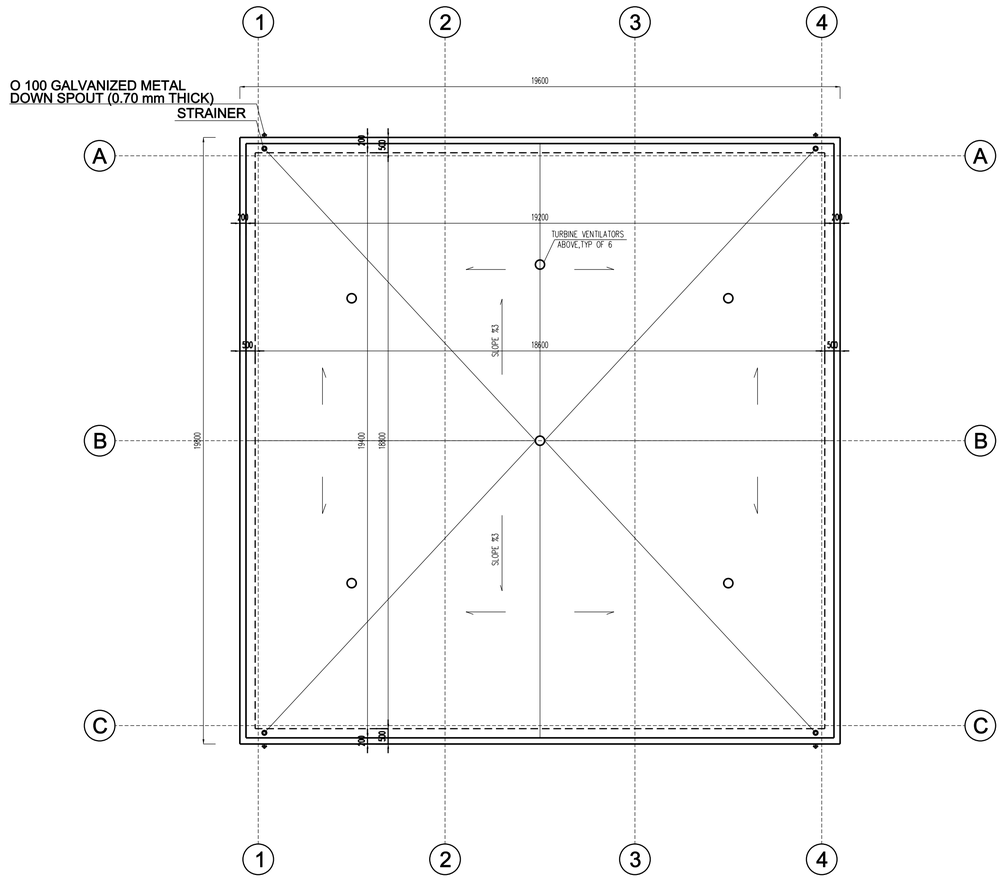

1 A-102 ROOF PLAN
SCALE = 1:10

GRAPHIC SCALE

500 200 100 0 500 1000

SCALE: 1 : 10

NOTE: ALL DIMENSIONS AND/OR DIMENSIONS SHOWN IN CALLOUTS/NOTES ARE IN MILLIMETERS UNLESS INDICATED OTHERWISE NOTED.

US ARMY CORPS OF ENGINEERS
AFGHANISTAN
ENGINEER DISTRICT

SYMBOL	DESCRIPTION	DATE	APPR.	SYMBOL	DESCRIPTION	DATE	APPR.

DESIGNED BY: DATE: XX-XX-XX REV.: —
DWN BY: CKD BY: DESIGN FILE NO.
REVIEWED BY: DRAWING CODE:
SUBMITTED BY: FILE NAME: PLOT SCALE: PLOT DATE: XX-XX-XX

U.S. ARMY ENGINEER DISTRICT, AFGHANISTAN
CORPS OF ENGINEERS
APO AE 96338

ENGINEERING AND CONSTRUCTION DIVISION

~~XXXX~~
~~XXXX~~
~~XXXX~~

Jalalabad, AFGHANISTAN
ARMS STORAGE
ROOF PLAN

SHEET REFERENCE NUMBER:
A-102
SHEET 3 OF 9

A1 Size 594mm x 841mm

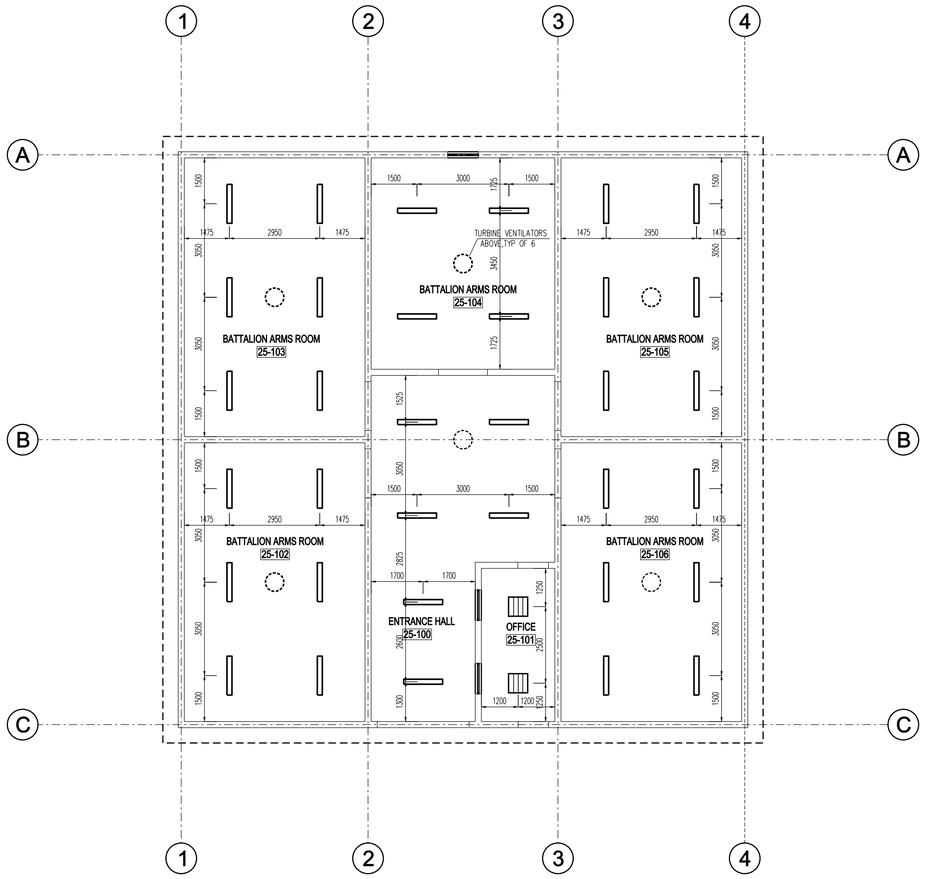

1 A-103 REFLECTED CEILING PLAN
SCALE = 1:10

GRAPHIC SCALE

500 200 100 0 500 1000

SCALE: 1 : 10

NOTE: ALL DIMENSIONS AND/OR DIMENSIONS SHOWN IN CALLOUTS/NOTES ARE IN MILLIMETERS UNLESS INDICATED OTHERWISE NOTED.

US ARMY CORPS OF ENGINEERS AFGHANISTAN ENGINEER DISTRICT

SYMBOL	DESCRIPTION	DATE	APPR.

SYMBOL	DESCRIPTION	DATE	APPR.

U.S. ARMY ENGINEER DISTRICT, AFGHANISTAN
CORPS OF ENGINEERS
APO AE 96338

ENGINEERING AND CONSTRUCTION DIVISION

DESIGNED BY: DATE: XX-XX-XX REV.: —
DWN BY: CKD BY: DESIGN FILE NO.
REVIEWED BY: DRAWING CODE:
SUBMITTED BY: FILE NAME:
PLOT SCALE:
PLOT DATE: XX-XX-XX

~~XXXXXXXXXX~~
~~XXXXXXXXXX~~
~~XXXXXXXXXX~~
~~XXXXXXXXXX~~
KANDAHAR, AFGHANISTAN
ARMS STORAGE
REFLECTED CEILING PLAN

SHEET REFERENCE NUMBER:
A-103
SHEET 4 OF 9

A1 Size 594mm x 841mm

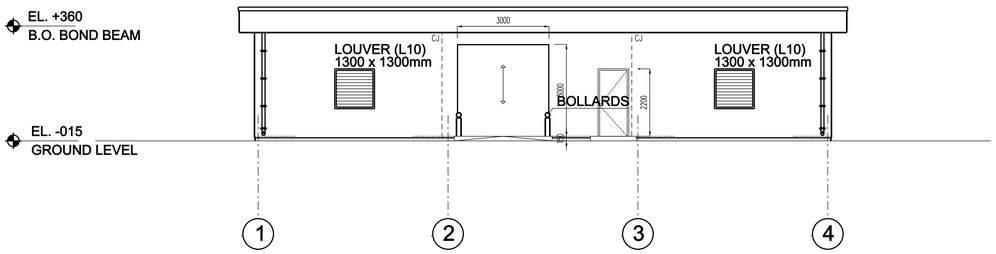

A A-201 ELEVATION
SCALE = 1:10

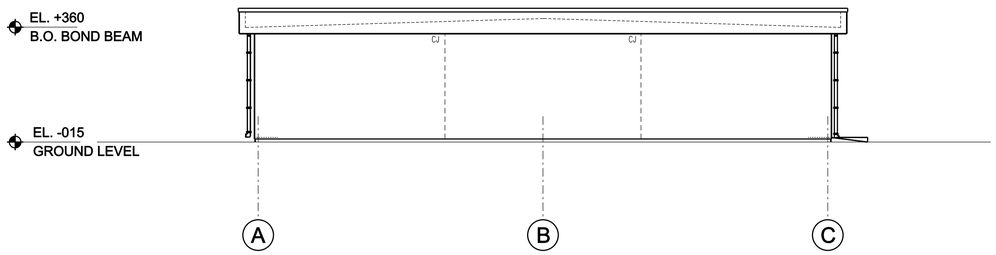

B A-201 ELEVATION
SCALE = 1:10

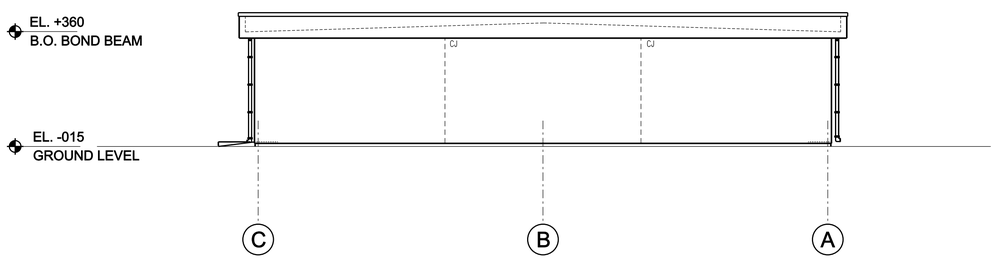

C A-201 ELEVATION
SCALE = 1:10

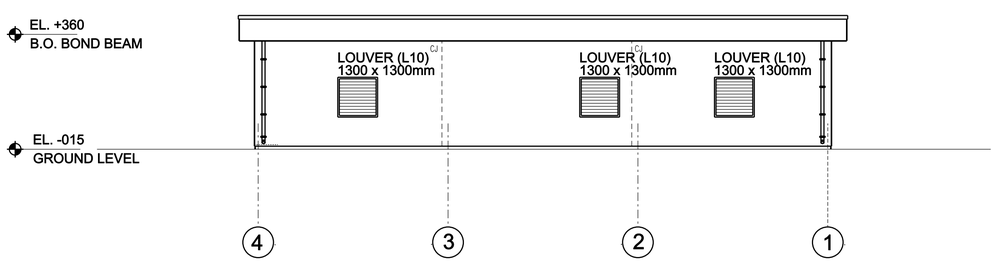

D A-201 ELEVATION
SCALE = 1:10

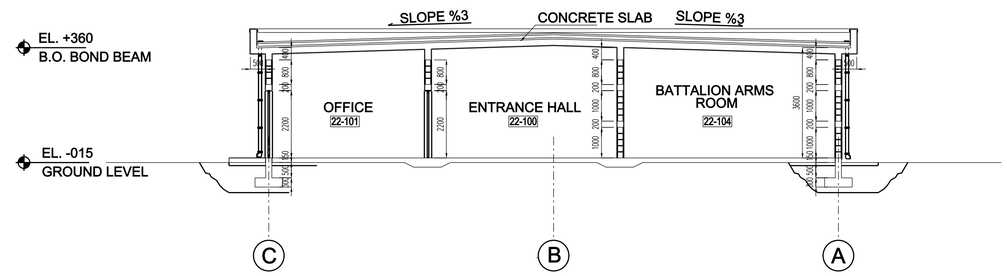

1 A-201 SECTION
SCALE = 1:10

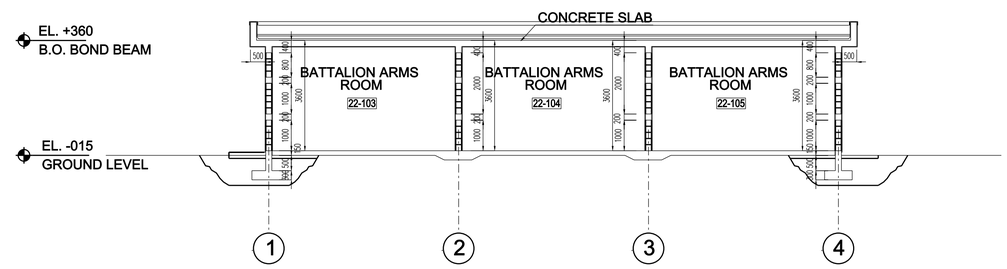

2 A-201 SECTION
SCALE = 1:10

GRAPHIC SCALE

500 200 100 0 500 1000

SCALE: 1 : 10

NOTE: ALL DIMENSIONS AND/OR DIMENSIONS SHOWN IN CALLOUTS/NOTES ARE IN MILLIMETERS UNLESS INDICATED OTHERWISE NOTED.

US ARMY CORPS OF ENGINEERS AFGHANISTAN ENGINEER DISTRICT

SYMBOL	DESCRIPTION	DATE	APPR.	SYMBOL	DESCRIPTION	DATE	APPR.

DESIGNED BY: DATE: REV.:
DWN BY: XX/XX/XX CKD BY: DESIGN FILE NO.:
REVIEWED BY: DRAWING CODE:
SUBMITTED BY: FILE NAME: PLOT SCALE: PLOT DATE: XX-XX-XX

U.S. ARMY ENGINEER DISTRICT, AFGHANISTAN
CORPS OF ENGINEERS
APO AE 96338

ENGINEERING AND CONSTRUCTION DIVISION

XXXXXXXXXX
XXXXXXXXXX, AFGHANISTAN
ARMS STORAGE

ELEVATIONS & SECTIONS

SHEET REFERENCE NUMBER:
A-201

SHEET 6 OF 9

A1 Size 594mm x 841mm