SITE ADAPT DESIGN
AD23 - ADMIN BUILDING - ARCH SPAN

CONTRACT NUMBER:
W912ER-09-D-0002 TO:0027

US ARMY CORPS
OF ENGINEERS
AFGHANISTAN NORTH
DISTRICT

SYMBOL	DESCRIPTION	DATE	APPR.	SYMBOL	DESCRIPTION	DATE	APPR.

U.S. ARMY ENGINEER DISTRICT, AFGHANISTAN
CORPS OF ENGINEERS
APO AE 09356

DESIGNED BY:
DWN BY: CKD BY:
REVIEWED BY:
SUBMITTED BY:

DATE: 3/24/2011
CONTRACT NO. W912ER-09-D-0002
DRAWING CODE:
FILE NAME: AD23-ADMIN-ARCH-SPAN-COVER-SHEET
PLOT SCALE: NONE
PLOT DATE: 3/24/2011
REV: 0

BAKER

SITE ADAPT DESIGN
AD23 - ADMIN BUILDING - ARCH SPAN
COVER SHEET

SHEET REFERENCE NUMBER:
G-001

3/24/2011 1:32 PM

A1 Size 594mm x 841mm

ENGINEERING AND CONSTRUCTION DIVISION
US ARMY ENGINEER DISTRICT, AFGHANISTAN
APO AE, 09356

AD23 ADMIN BUILDING

PROJECT COORDINATION

U.S. ARMY ENGINEER DISTRICT, AFGHANISTAN

PROJECT MANAGER _____ DATE _____

CHIEF, DESIGN BRANCH _____ DATE _____

THIS PROJECT WAS DESIGNED BY AFGHANASTAN ENGINEER DISTRICT OF THE U.S ARMY CORPS OF ENGINEERS. THE INITIALS OR SIGNATURES AND REGISTRATION DESIGNATIONS OF INDIVIDUALS APPEAR ON THESE DOCUMENTS WITHIN THE SCOPE OF THEIR EMPLOYMENT AS REQUIRED BY ER 1110-1-8152.

SECTION/DETAIL CROSS REFERENCING CONVENTIONS

DETAIL SYMBOL
- 1 / A-001
- DETAIL IDENTIFICATION NUMBER
- NUMBER OF SHEET ON WHICH DETAIL OF THE CONDITION IS DRAWN
- SYMBOL WHERE DETAIL IS TAKEN

SECTION SYMBOL
- 1 / A-101
- DIRECTION
- SECTION IDENTIFICATION NUMBER
- NUMBER OF SHEET ON WHICH SECTION IS DRAWN
- SYMBOL WHERE SECTION IS TAKEN

DRAWING TITLE
- 1 / A-001 DRAWING TITLE
- SCALE
- DRAWING SCALE
- DRAWING TITLE NUMBER

INTERIOR ELEVATION SYMBOL
- A, B, C, D
- 1 / A-101
- ELEVATION IDENTIFICATION NUMBER
- DIRECTION
- NUMBER OF SHEET ON WHICH ELEVATION IS DRAWN
- SYMBOLWHERE ELEVATION IS TAKEN

EXTERIOR ELEVATION SYMBOL
- 1 / G-001
- DIRECTION
- ELEVATION IDENTIFICATION NUMBER
- NUMBER OF SHEET ON WHICH ELEVATION IS DRAWN

NORTH SYMBOL
- N
- NOTE: NORTH ARROW DEPICTS PLAN NORTH. ACTUAL NORTH MAY VARY DEPENDING ON ACTUAL SITE ORIENTATION. COORDINATE NORTH WITH ACTUAL SITE ORIENTATION.

APPENDIX A

AFGHANISTAN

SCHEDULE OF DRAWINGS

SHEET NO	DWG CODE	SHEET REFERENCE NO	DESCRIPTION	REV STATUS
			GENERAL	
1	ARCHSPANADMIN-G-001	G-001	COVER SHEET	
2	ARCHSPANADMIN-G-002	G-002	INDEX SHEET	
3	ARCHSPANADMIN-G-003	G-003	LIFE SAFETY PLAN AND CODE ANALYSIS	
			STRUCTURAL	
4	ARCHSPANADMIN-S-001	S-001	ABBREVIATIONS AND GENERAL NOTES	
5	ARCHSPANADMIN-S-002	S-002	GENERAL NOTES AND DESIGN CRITERIA	
6	ARCHSPANADMIN-S-101	S-101	FOUNDATION PLAN	
7	ARCHSPANADMIN-S-201	S-201	BUILDING ELEVATION AND DETAILS	
8	ARCHSPANADMIN-S-202	S-202	BUILDING SECTION AND DETAILS	
9	ARCHSPANADMIN-S-301	S-301	FOUNDATION SECTIONS	
10	ARCHSPANADMIN-S-302	S-302	SECTIONS	
11	ARCHSPANADMIN-S-303	S-303	LATRINE SECTIONS	
12	ARCHSPANADMIN-S-501	S-501	TYPICAL DETAILS	
13	ARCHSPANADMIN-S-502	S-502	DOOR/WINDOW/MECHANICAL OPENING FRAME DETAILS	
14	ARCHSPANADMIN-S-601	S-601	SCHEDULES	
			ARCHITECTURAL	
15	ARCHSPANADMIN-A-001	A-001	ABBREVIATIONS, SYMBOLS AND GENERAL NOTES	
16	ARCHSPANADMIN-A-101	A-101	FLOOR PLAN	
17	ARCHSPANADMIN-A-102	A-102	REFLECTED CEILING PLAN	
18	ARCHSPANADMIN-A-103	A-103	ROOF PLAN	
19	ARCHSPANADMIN-A-201	A-201	ELEVATIONS	
20	ARCHSPANADMIN-A-301	A-301	BUILDING SECTIONS	
21	ARCHSPANADMIN-A-302	A-302	WALL SECTIONS	
22	ARCHSPANADMIN-A-303	A-303	WALL SECTIONS	
23	ARCHSPANADMIN-A-401	A-401	ENLARGED PLAN	
24	ARCHSPANADMIN-A-501	A-501	EXTERIOR DETAILS	
25	ARCHSPANADMIN-A-502	A-502	HEAD, JAMB & SILL DETAILS	
26	ARCHSPANADMIN-A-503	A-503	STOOP DETAILS	
27	ARCHSPANADMIN-A-504	A-504	TOILET, LAVATORY & ABLUTION DETAILS	
28	ARCHSPANADMIN-A-505	A-505	DETAILS	
29	ARCHSPANADMIN-A-601	A-601	WINDOW AND DOOR SCHEDULE	
30	ARCHSPANADMIN-A-602	A-602	PARTITION TYPES	
31	ARCHSPANADMIN-A-603	A-603	FINISH SCHEDULE	
			PLUMBING	
32	ARCHSPANADMIN-P-001	P-001	PLUMBING SYMBOLS AND LEGEND AND GENERAL NOTES	
33	ARCHSPANADMIN-P-101	P-101	FLOOR PLAN - PLUMBING (SANITARY & WATER) ENLARGED FLOOR PLAN - PLUMBING (SANITARY & WATER)	
34	ARCHSPANADMIN-P-501	P-501	PLUMBING SCHEDULES AND DETAILS	
35	ARCHSPANADMIN-P-502	P-502	PLUMBING DETAILS	
36	ARCHSPANADMIN-P-901	P-901	DRAINAGE VENT ISOMETRIC AND HOT AND COLD WATER PIPING ISOMETRICS	

SHEET NO	DWG CODE	SHEET REFERENCE NO	DESCRIPTION	REV STATUS
			MECHANICAL	
37	ARCHSPANADMIN-M-101	M-101	HVAC FLOOR PLAN AND SCHEDULES	
38	ARCHSPANADMIN-M-501	M-501	HVAC DETAILS	
			ELECTRICAL	
39	ARCHSPANADMIN-E-001	E-001	ELECTRICAL SYMBOLS, NOTES AND ABBREVIATIONS	
40	ARCHSPANADMIN-E-101	E-101	ELECTRICAL LIGHTING PLAN	
41	ARCHSPANADMIN-E-102	E-102	ELECTRICAL POWER AND SYSTEMS PLAN	
42	ARCHSPANADMIN-E-501	E-501	ELECTRICAL DETAILS	
43	ARCHSPANADMIN-E-601	E-601	LIGHTING FIXTURE SCHEDULES	
44	ARCHSPANADMIN-E-602	E-602	ELECTRICAL PANEL SCHEDULES	

US ARMY CORPS OF ENGINEERS AFGHANISTAN NORTH DISTRICT

SYMBOL	DESCRIPTION	DATE	APPR.	SYMBOL	DESCRIPTION	DATE	APPR.

U.S. ARMY ENGINEER DISTRICT, AFGHANISTAN
CORPS OF ENGINEERS
APO AE 09356

DESIGNED BY: JDS
DWN BY: JDS
CKD BY: JDS
REVIEWED BY: JH
SUBMITTED BY:
DATE: 3/24/2011
CONTRACT NO. W912ER-09-D-0002
DRAWING CODE:
REV: 0
FILE NAME: ARCHSPANADMIN-G-002.DWG
PLOT SCALE: NONE
PLOT DATE: 3/24/2011

BAKER

SITE ADAPT DESIGN
AD23 - ADMIN BUILDING - ARCH SPAN
INDEX SHEET

SHEET REFERENCE NUMBER:
G-002

3/24/2011 1:32 PM

A1 Size 594mm x 841mm

LEGEND:

- DENOTES PATHS OF EXIT TRAVEL
- EXIT — DENOTES DOOR AS AN EMERGENCY EXIT
- DENOTES STARTING POINT FOR TRAVEL DISTANCE
- FE — DENOTES FIRE EXTINGUISHER LOCATIONS
- (1) HOUR RATED WALL
- (2) HOUR RATED WALL
- FIRE RESISTANT CEILING
- NON-FIRE RESISTANT CEILING SYSTEM OR EXPOSED FIRE RESISTANT SPRAY-ON INSULATION SYSTEM AT ARCH-SPAN STRUCTURE

REFER TO REFLECTED CEILING PLANS FOR CEILING MATERIALS AND CONFIGURATION

PER MEMORANDUM FOR RECORD DATED 03 FEBRUARY 2011
ANSF CONSTRUCTION STANDARDS DIVISION 09 FINISHES:
CEILING **DO NOT** NEED TO MEET FIRE BOUNDARY CODE REQUIREMENTS.

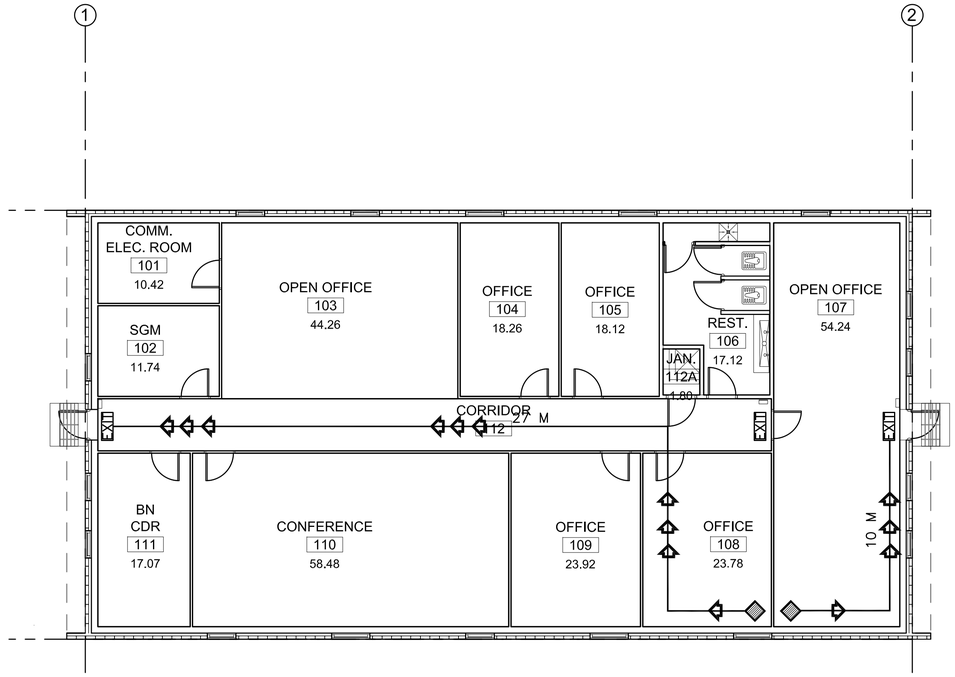

1 G-003 **LIFE SAFETY PLAN**
SCALE: 1:100

CODE ANALYSIS:

1. REFERENCES:
   2009 INTERNATIONAL BUILDING CODE (2009 IBC)
   2009 LIFE SAFETY CODE (2006 NFPA 101)
   2009 NFPA 10 - STANDARD FOR PORTABLE FIRE EXTINGUISHERS.

2. IBC OCCUPANCY CLASSIFICATION:
   GROUP B (BUSINESS NFPA 101 6.1.11 AND CHAPTER 38)

3. TYPE OF CONSTRUCTION (IBC): TYPE II-B (UNPROTECTED/NONSPRINKLERED)

4. IBC TABLE 503: ALLOWABLE HEIGHT AND BUILDING AREAS:
   GROUP B
   ALLOWABLE AREA: 2,137 SM
   ALLOWABLE HEIGHT: 3 STORIES (16 M)

   GROUP B
   PROPOSED AREA: 378 SM
   PROPOSED HEIGHT: 1 STORY (<16 M)

5. IBC TABLE 601 & 602: FIRE RESISTANCE RATING REQUIREMENTS FOR BUILDING ELEMENTS FOR TYPE II-B

BUILDING ELEMENT	RATING (HOUR)	REFERENCE
STRUCTURAL FRAME (COLUMNS, GIRDERS & TRUSSES)	0	TABLE 601
BEARING WALLS		
EXTERIOR	0	TABLE 601
INTERIOR	0	TABLE 601
NONBEARING WALLS & PARTITIONS		
INTERIOR	0	TABLE 601
FLOOR CONSTRUCTION	0	TABLE 601
ROOF CONSTRUCTION	0	TABLE 601
EXTERIOR WALL	0	TABLE 602

6. IBC TABLE 803.5 - INTERIOR WALL AND CEILING FINISH REQUIREMENTS FOR B OCCUPANCY/NONSPRINKLERED

GROUP	EXIT ENCLOSURES AND EXIT PASSAGEWAY	CORRIDORS	ROOMS AND ENCLOSED SPACES
B	A	B	C

7. NFPA 101 TABLE 7.3.1.2 - OCCUPANT LOAD
   BUSINESS = 320 SM @ 9.3 SM/PERSON BUSINESS PROPOSED = 34 OCCUPANTS
   ASSEMBLY = 58 SM @ 1.4 SM/PERSON BUSINESS PROPOSED = 41 OCCUPANTS
   TOTAL OCCUPANCY = 75

8. NFPA 101 TABLE 7.3.3.1 - EGRESS CAPACITY
   BUSINESS = 5 MM PER OCCUPANT

   REQUIRED: 375 MM (75 OCCUPANTS x 5 MM PER OCCUPANT)
   PROPOSED EGRESS CAPACITY: 1800 MM: (2) 900 MM DOORS

9. NFPA 101 PARAGRAPH 38.2.6.2 - EXIT ACCESS TRAVEL DISTANCE (NONSPRINKLERED)
   REQUIRED: 60 METERS
   PROPOSED: 28 METERS

10. NFPA 101 PARAGRAPH 38.3.6.1(1) & (2) - CORRIDORS
    NO RATED CORRIDOR REQUIRED (NONSPRINKLERED):
    (1) ALL EXITS ARE AVAILABLE FROM AN OPEN FLOOR AREA
    (2) SPACE IS OCCUPIED BY A SINGLE TENANT

11. NFPA 101 PARAGRAPH 38.2.4.1 - NUMBER OF EXITS
    BUSINESS REQUIRED: 1 MINIMUM
    BUSINESS PROPOSED: 2 EXITS

NATURAL VENTILATION CALCULATIONS

ROOMNUMBER	ROOM NAME	ROOM NSM	REQ'D WINDOW AREA @4%	WINDOWS TYPE #1	WINDOWS TYPE #2	WINDOWS TYPE #3	CRITERIA MET
101	COMM. ELEC. ROOM	10.42	0.42	NA	NA	NA	NA
102	SGM	11.74	0.47	NA	1	NA	YES
103	OPEN OFFICE	44.26	1.77	NA	NA	2	YES
104	OFFICE	18.26	0.73	1	NA	NA	YES
105	OFFICE	18.12	0.73	1	NA	NA	YES
106	RESTROOM	17.12	0.68	NA	NA	NA	NA
107	OPEN OFFICE	54.24	2.17	NA	4	1	YES
108	OFFICE	23.78	0.95	1	NA	NA	YES
109	OFFICE	23.92	0.96	1	NA	NA	YES
110	CONFERENCE	58.48	2.34	1	NA	2	YES
111	BN CDR	17.07	0.68	NA	2	NA	YES
112	CORRIDOR	37.38	1.50	NA	NA	NA	NA
112A	JANITOR CL.	1.80	0.07	NA	NA	NA	NA
	TOTAL NET SM	336.59					
	TOTAL GROSS SM	378.00					

0 2000 4000
SCALE: 1:100

UNLESS OTHERWISE NOTED, LINEAR DIMENSIONS SHOWN ARE IN MILLIMETERS.

COMMONWEALTH OF VIRGINIA
PETER GARRETT SCHMIDT
No. 013167
ARCHITECT

US ARMY CORPS OF ENGINEERS
AFGHANISTAN NORTH DISTRICT

SYMBOL	DESCRIPTION	DATE	APPR.	SYMBOL	DESCRIPTION	DATE	APPR.

DESIGNED BY: DWN BY: CKD BY: REVIEWED BY: SUBMITTED BY:
DATE: 3/24/2011
CONTRACT NO. W912ER-09-D-0002
DRAWING CODE:
FILE NAME:
PLOT SCALE:
PLOT DATE: 3/24/2011
REV.

U.S. ARMY ENGINEER DISTRICT, AFGHANISTAN
CORPS OF ENGINEERS
APO AE 09356

BAKER

SITE ADAPT DESIGN
AD23 - ADMIN BUILDING - ARCH SPAN
LIFE SAFETY PLAN AND CODE ANALYSIS

SHEET REFERENCE NUMBER:
G-003

3/24/2011 1:32 PM

A1 Size 594mm x 841mm

STRUCTURAL ABBREVIATIONS:

ACI	AMERICAN CONCRETE INSTITUTE
ADD'L	ADDITIONAL
AISC	AMERICAN INSTITUTE OF STEEL CONSTRUCTION
AISI	AMERICAN IRON AND STEEL INSTITUTE
ASTM	AMERICAN SOCIETY FOR TESTING AND MATERIALS
ARCH	ARCHITECTURAL
B	BOTTOM
BLDG	BUILDING
BOTT	BOTTOM
℄	CENTER LINE
CFMRF	COLD FORM METAL ROOF FRAME
CFMF	COLD FORM METAL FRAME
CFS	COLD FORMED STEEL
CIP	CAST-IN-PLACE
CIPL	CAST-IN-PLACE LINTEL
CJ	CONTROL JOINT
CLR	CLEAR
CMU	CONCRETE MASONRY UNIT
COEFF	COEFFICIENT
COL	COLUMN
CONC	CONCRETE
CONT	CONTINUOUS
COORD	COORDINATE
CRSI	CONCRETE REINFORCING STEEL INSTITUTE
CSJ	CONSTRUCTION JOINT
DIA	DIAMETER
DIAG	DIAGONAL
DIM	DIMENSION
DWG	DRAWING
DWL	DOWEL
EA	EACH
EF	EACH FACE
ELEC	ELECTRICAL
ELEV	ELEVATION
EMBED	EMBEDMENT
EQUIV	EQUIVALENT
ETC	ET CETERA
EW	EACH WAY
EXP	EXPANSION
EXT	EXTERIOR
FND	FOUNDATION
FTG	FOOTING
GA	GAUGE
GB	GRADE BEAM
HORIZ	HORIZONTAL
h	HOUR
HRS	HOURS
IBC	INTERNATIONAL BUILDING CODE
INFO	INFORMATION
INT	INTERIOR
kg	KILOGRAM
km	KILOMETER
kN	KILONEWTON
kPa	KILOPASCAL
L#	ANGLE (# INDICATES SIZE)
LONG	LONGITUDINAL
LLV	LONG LEG VERTICAL
m	METER
MAX	MAXIMUM
MECH	MECHANICAL
MFG	MANUFACTURER
MID	MIDDLE
MIN	MINIMUM
MISC	MISCELLANEOUS
mm	MILLIMETER
MPa	MEGAPASCAL
MTL	METAL
MWFRS	MAIN WIND FORCE RESISTING SYSTEM
N	NEWTON
N	NORTH
N/A	NOT APPLICABLE
#	NUMBER SYMBOL FOR REBAR SIZE
NTS	NOT TO SCALE
OC	ON CENTER
OPNG	OPENING
℄ or PL	PLATE
PRE-ENG	PRE-ENGINEERED
RB	ROOF BEAM
REINF	REINFORCED
REQ'D	REQUIRED
SIM	SIMILAR
SOG	SLAB-ON-GRADE
SPECS	SPECIFICATIONS
STD	STANDARD
STRUCT	STRUCTURAL
SW	SHEAR WALL
T	TOP
T/	TOP OF
T/ELEV	TOP ELEVATION
T/SLAB	TOP OF SLAB
T&B	TOP AND BOTTOM
THK	THICK
TYP	TYPICAL
UFC	UNIFIED FACILITIES CRITERIA
UON	UNLESS OTHERWISE NOTED
VERT	VERTICAL
W	WIDTH
W/	WITH

1.0 GENERAL NOTES:

1.1 THIS PROJECT HAS BEEN DESIGNED FOR THE WEIGHTS AND MATERIALS INDICATED ON THE DRAWINGS AND FOR THE SUPERIMPOSED DEAD AND LIVE LOADS INDICATED IN THE STRUCTURAL DESIGN CRITERIA. IT IS THE CONTRACTOR'S RESPONSIBILITY TO DETERMINE ALLOWABLE CONSTRUCTION LOADS AND TO PROVIDE PROPER DESIGN AND CONSTRUCTION OF FALSEWORK, FORMWORK, STAGING, BRACING, SHEETING AND SHORING, ETC.

1.2 METHODS, PROCEDURES AND SEQUENCES OF CONSTRUCTION ARE THE RESPONSIBILITY OF THE CONTRACTOR. THE CONTRACTOR IS RESPONSIBLE FOR IDENTIFYING AND IMPLEMENTING THE NECESSARY PRECAUTIONS TO MAINTAIN AND ENSURE THE INTEGRITY OF THE STRUCTURE AT ALL STAGES OF CONSTRUCTION.

1.3 COORDINATE THESE DRAWINGS WITH THE ARCHITECTURAL, MECHANICAL, ELECTRICAL, PLUMBING, AND CIVIL DRAWINGS. ALL DIMENSIONS SHOWN ON THE DRAWINGS ARE MILLIMETERS UNLESS NOTED OTHERWISE.

1.4 SLEEVES OR BLOCK-OUTS REQUIRED FOR PASSAGE OF DUCTWORK, PIPING, DRAINS, CONDUIT, ETC, IN ADDITION TO ANCHORS, CURBS AND HANGERS REQUIRED FOR EQUIPMENT AND PIPING AND UNDER-SLAB UTILITIES ARE NOT SPECIFICALLY, NOR GENERALLY, INDICATED ON THE STRUCTURAL DRAWINGS. THE CONTRACTOR IS RESPONSIBLE FOR COORDINATING WORK SHOWN ON OTHER DISCIPLINE'S DRAWINGS AND DETERMINING SUCH REQUIREMENTS PRIOR TO FABRICATION OR ERECTION OF THE STRUCTURE. PENETRATIONS OF STRUCTURAL MEMBERS ARE SUBJECT TO APPROVAL BY THE CONTRACTING OFFICER. REFER TO GENERAL NOTE 8.9 FOR OPENINGS IN ARCH SPAN STRUCTURE.

1.5 DIMENSIONS AND INSTALLATION DETAILS OF PURCHASED EQUIPMENT MUST BE VERIFIED AND COORDINATED WITH THE SUPPORTING STRUCTURE. THE CONTRACTOR IS RESPONSIBLE FOR DETERMINING SUCH REQUIREMENTS FROM SUBCONTRACTORS AND EQUIPMENT SUPPLIERS ALONG WITH COORDINATING THE LOCATIONS AND DETAILS FOR THESE ITEMS PRIOR TO CONSTRUCTION OF EQUIPMENT PADS OR FABRICATION AND ERECTION OF FRAMING INTENDED TO SUPPORT SUCH EQUIPMENT. ANY CONFLICTS BETWEEN THESE ITEMS AND THE BUILDING STRUCTURE IS TO BE BROUGHT TO THE ATTENTION OF THE CONTRACTING OFFICER FOR RESOLUTION. REFER TO GENERAL NOTE 8.11 FOR HANGING LOADS ON ARCH SPAN STRUCTURE.

1.6 WORK NOT INCLUDED ON THE DRAWINGS BUT IMPLIED TO BE SIMILAR TO THAT SHOWN AT CORRESPONDING PLACES ELSEWHERE ON THE DRAWINGS SHALL BE REPEATED.

1.7 IN CASE OF CONFLICT BETWEEN THE NOTES, DETAILS AND SPECIFICATIONS THE MOST RIGID REQUIREMENTS SHALL GOVERN.

1.8 SEE ARCHITECTURAL DRAWINGS FOR LOCATIONS OF NON-LOAD BEARING PARTITIONS. PROVIDE COMPRESSIBLE FIRESAFING AT TOP OF WALL AS REQUIRED BY ARCHITECTURAL DRAWINGS.

1.9 COORDINATE FINISHED FLOOR DATUM ELEVATION 0.0m WITH THE CIVIL DRAWINGS.

2.0 FOUNDATION NOTES

2.1 THE GEOTECHNICAL ANALYSIS FOR THIS PROJECT IS THE RESPONSIBILITY OF THE CONTRACTOR AWARDED THE WORK. AN ASSUMED ALLOWABLE SOIL BEARING VALUE OF 72 kPa HAS BEEN USED IN THE STRUCTURAL ANALYSIS OF THE BUILDING AND SHALL BE CONFIRMED AND VERIFIED AS PART OF THE GEOTECHNICAL INVESTIGATION. VALUES WHICH DO NOT MEET THE REQUIREMENTS INDICATED IN THE STRUCTURAL DESIGN CRITERIA, FOUNDATION LOADS SECTION SHALL BE IMMEDIATELY BROUGHT TO THE ATTENTION OF THE CONTRACTING OFFICER FOR CONSIDERATION AND DETERMINATION ON THE NEXT APPROPRIATE COURSE OF ACTION.

2.2 ELEVATIONS SHOWN ON THE DRAWINGS AT WHICH FOUNDATIONS BEAR ARE APPROXIMATE AND MAY VARY TO SUIT SUBSURFACE SOIL CONDITIONS AND PROJECT GEOTECHNICAL ENGINEER'S RECOMMENDATIONS. ALL EXTERIOR FOOTINGS ARE TO BEAR A MINIMUM OF 800mm BELOW FINISHED GRADE.

2.3 SEE THE SPECIFICATION FOR ADDITIONAL REQUIREMENTS TO THOSE OUTLINED IN THE GEOTECHNICAL INVESTIGATION FOR EXCAVATION AND PREPARATION OF THE FOUNDATION AND THE SLAB ON GRADE SUBGRADE INCLUDING COMPACTION PROCEDURES.

2.4 EXCAVATIONS FOR FOOTINGS SHALL HAVE THE SIDES AND BOTTOMS TEMPORARILY LINED WITH 0.25mm POLYETHYLENE IF PLACEMENT OF CONCRETE DOES NOT OCCUR WITHIN 24 HRS OF THE EXCAVATION OF THE FOOTING.

2.5 FOUNDATION CONDITIONS NOTED DURING CONSTRUCTION WHICH DIFFER FROM THOSE DESCRIBED IN THE GEOTECHNICAL REPORT SHALL BE REPORTED TO THE GENERAL CONTRACTOR AND CONTRACTING OFFICER BEFORE FURTHER CONSTRUCTION IS ATTEMPTED.

2.6 NO FOOTINGS SHALL BE POURED INTO OR AGAINST SUBGRADE CONTAINING FREE WATER, FROST, ICE OR LOOSE MATERIAL.

2.7 CONCRETE SLABS ON GRADE HAVE BEEN DESIGNED TO BEAR ON PROPERLY COMPACTED SUB-BASE STONE AND SUB-GRADE SOILS. THE SUB-BASE MATERIAL BENEATH THE SLAB-ON-GRADE SHALL BE A WELL GRADED CRUSHED STONE (AASHTO #57 OR SIMILAR) AND BE COMPACTED IN ACCORDANCE WITH 95% MODIFIED DENSITY PER ASTM D 1557.

2.8 PRIOR TO START OF FOUNDATION OR SLAB-ON-GRADE CONSTRUCTION, EXISTING SUBGRADES SHALL BE COMPACTED TO MINIMUM OF 95% MAXIMUM DRY DENSITY OBTAINED THRU ASTM D 1557 MODIFIED PROCTOR TESTING.

2.9 SEE PLUMBING, ELECTRICAL & CIVIL DRAWINGS FOR REQUIRED UNDERSLAB UTILITIES.

2.10 SEE ARCHITECTURAL DRAWINGS FOR ALL WATERPROOFING DETAILS AND MATERIALS.

2.11 IF UNDERMINING OF FOOTINGS OCCURS, FILL VOIDS WITH 15 MPa CONCRETE. DO NOT ATTEMPT TO REPLACE AND RE-COMPACT SOIL.

3.0 CONCRETE

3.1 CONCRETE SHALL HAVE THE UNIT WEIGHT OF 2350 kg/m^3 AND A MINIMUM COMPRESSIVE STRENGTH (f'c) OF 28 MPa AT 28 DAYS. ALL CONCRETE SHALL HAVE A MAXIMUM WATER-CEMENT RATIO OF 0.45. SEE SPECIFICATIONS FOR ADDITIONAL INFORMATION. ENTRAIN AIR TO PRODUCE TOTAL AIR CONTENT ACCORDING TO THE SPECIFICATIONS FOR CONCRETE EXPOSED TO FREEZING TEMPERATURES (EXTERIOR FOOTINGS AND SHEAR WALLS, SLAB TURNDOWNS, EXTERIOR SLABS AND SLABS-ON-GRADE, EXTERIOR RETAINING WALLS.)

3.2 PRIOR TO CONCRETE PLACEMENT, THE CONTRACTOR MUST SUBMIT CONCRETE MIX DESIGNS FOR EACH TYPE OF CONCRETE TO BE USED, PREPARED IN ACCORDANCE WITH THE SPECIFICATIONS TO THE CONTRACTING OFFICER FOR REVIEW.

3.3 NO CALCIUM CHLORIDE SHALL BE USED IN ANY CONCRETE.

3.4 MIXING, TRANSPORTING AND PLACING OF CONCRETE SHALL CONFORM TO ACI 301M-05.

3.5 ALL CONCRETE WORK SHALL CONFORM TO THE REQUIREMENTS OF THE AMERICAN CONCRETE INSTITUTE (ACI) 318M-05 MANUAL (metric), "BUILDING CODE REQUIREMENTS FOR REINFORCED CONCRETE", ACI-301M-05 "SPECIFICATIONS FOR STRUCTURAL CONCRETE FOR BUILDINGS" AND REQUIREMENTS OUTLINED IN THE CONTRACT SPECIFICATIONS.

3.6 CHAMFER ALL EXPOSED EXTERNAL CORNERS OF CONCRETE WITH 20mm x45 DEGREE CHAMFER UON.

3.7 CONCRETE REINFORCEMENT BARS SHALL BE METRIC SIZE BARS AND SHALL CONFORM TO ASTM A615M-07, GRADE 420 MPa, REINFORCING BARS SHALL NOT BE TACK WELDED, WELDED, HEATED OR CUT, UNLESS INDICATED ON THE CONTRACT DOCUMENTS. ALL LAP SPLICES SHALL BE CLASS "B" UON.

3.8 HORIZONTAL FOOTING AND HORIZONTAL WALL REINFORCEMENT SHALL BE CONTINUOUS AND SHALL HAVE 90 DEGREE BENDS AND EXTENSIONS, OR CORNER BARS OF EQUIVALENT SIZE LAPPED WITH A CLASS B TENSION SPLICE AT CORNERS AND INTERSECTIONS. TOP BAR CRITERIA SHALL APPLY IF 300mm OR MORE OF FRESH CONCRETE IS PLACED BELOW BAR.

3.9 SLABS-ON-GRADE SHALL HAVE CONSTRUCTION JOINTS OR CRACK CONTROL JOINTS AS SHOWN ON THE DRAWINGS. CONSTRUCTION JOINTS CAN BE USED AT CONTROL JOINT LOCATIONS AT CONTRACTORS OPTION. SEE SLAB PLANS & JOINT DETAILS FOR ADDITIONAL INFORMATION. FOR AREAS NOT SHOWN ON DWGS, THE MAXIMUM SPACING OF CONSTRUCTION/ CRACK CONTROL JOINTS SHALL BE 3600mm.

3.10 ALL CONCRETE REINFORCEMENT SHALL BE DETAILED, FABRICATED, LABELED, SUPPORTED, AND SPACED IN FORMS AND SECURED IN PLACE IN ACCORDANCE WITH THE PROCEDURES AND REQUIREMENTS OUTLINED IN ACI 318M, AND THE "MANUAL OF STANDARD PRACTICE FOR DETAILING REINFORCED CONCRETE STRUCTURES", ACI 315M, LATEST EDITION.

3.11 ALL DOWELS SHALL MATCH SIZE AND NUMBER OF MAIN REINFORCING, UNLESS NOTED OTHERWISE ON THE DRAWINGS.

3.12 ADDITIONAL BARS SHALL BE PROVIDED AROUND ALL FLOOR AND WALL OPENINGS AS SHOWN ON THE DRAWINGS.

3.13 SEE ARCHITECTURAL DRAWINGS FOR TYPE AND LOCATION OF ALL FLOOR FINISHES.

3.14 SPLICES (LAPS) OF REINFORCING BARS SHALL BE CLASS 'B' TENSION LAPS PER ACI 318M-05 UNLESS NOTED OTHERWISE. SEE SCHEDULE ON S-601.

3.15 PROVIDE ADEQUATE CONCRETE COVER IN ACCORDANCE WITH THE REQUIREMENTS AS SET FORTH BY ACI 318M-05.

3.16 REINFORCEMENT IS TO BE SECURELY HELD IN PLACE WHILE PLACING CONCRETE. IF REQUIRED, ADDITIONAL BARS, STIRRUPS, OR CHAIRS WILL BE PROVIDED BY THE CONTRACTOR TO FURNISH SUPPORT FOR ALL BARS WHERE NECESSARY DURING CONSTRUCTION.

3.17 CONTINUOUS TOP BARS TO BE SPLICED AT MID-SPAN. CONTINUOUS BOTTOM BARS TO BE SPLICED AT CENTERLINE OF SUPPORTS (OR AS SHOWN ON DETAILS).

3.18 CONCRETE SLABS TO BE CURED BY METHOD COMPATIBLE WITH SPECIFIED FLOOR FINISH. WHERE ACCEPTABLE USE A LIQUID MEMBRANE-CURING COMPOUND AT THE MANUFACTURERS RECOMMENDED COVERAGE. SAW JOINTS TO BE CUT AS SOON AS POSSIBLE WITHOUT RAVELING THE SURFACE.

3.19 LEVELING GROUT TO BE NON-SHRINK, NON-METALLIC TYPE, FACTORY PREMIXED GROUT IN ACCORDANCE WITH ASTM C 1107, HAVING A MINIMUM COMPRESSIVE STRENGTH OF NOT LESS THAN 34.5 MPa.

3.20 SLEEVES, INSERTS, MECHANICAL OPENINGS, CONDUITS, PIPES, RECESSES. DEPRESSIONS, CURBS AND OTHER EMBEDDED ITEMS TO BE PROVIDED FOR AS SHOWN ON THE ARCHITECTURAL, MECHANICAL AND ELECTRICAL DRAWINGS AND AS REQUIRED BY EQUIPMENT MANUFACTURERS. INSTALLATION OF THESE ITEMS TO BE COORDINATED AND PROVIDED FOR PRIOR TO PLACING CONCRETE.

3.21 EPOXY ADHESIVE SUCH AS EUCO-#452 AS MANUFACTURED BY EUCLID CHEMICAL CO. OR HVA ADHESIVE SYSTEM AS MANUFACTURED BY HILTI, INC. SHALL BE USED WHERE REBAR DOWELS ARE TO BE INSTALLED INTO EXISTING CONCRETE.

3.0 CONCRETE CONT

3.22 ANCHOR RODS TO BE ASTM F 1554 FY=248 MPa MINIMUM, GALVANIZED, UNLESS NOTED OTHERWISE.

3.23 UNLESS NOTED OTHERWISE, ALL CURBS SHALL BE REINFORCED WITH AT LEAST (1)-#14 CONTINUOUS AND #14 AT 450mm O.C. DOWELS TO THE SLAB-ON-GRADE.

3.24 PROVIDE ADDITIONAL (2)-#14 x 600mm REINFORCING BARS IN SLAB-ON GRADE AT ALL RE-ENTRANT CORNERS. PLACE BARS AT MID-DEPTH OF SLAB WITH A CLEARANCE OF 50mm FROM CORNER UON.

3.25 COLD-WEATHER PLACEMENT: COMPLY WITH ACI 306.1 AND AS FOLLOWS. PROTECT CONCRETE WORK FROM PHYSICAL DAMAGE OR REDUCED STRENGTH THAT COULD BE CAUSED BY FROST, FREEZING ACTIONS, OR LOW TEMPERATURES. SUBMIT A COLD WEATHER CONCRETING PLAN FOR APPROVAL.

3.26 PROVIDE BONDING COMPOUND PER ASTM C 1059-99: SPECIFICATION FOR LATEX AGENTS FOR BONDING FRESH CONCRETE (GROUT) TO HARDENED CONCRETE.

3.27 THE FORMED SURFACES FOR REINFORCED CONCRETE SHALL ACHIEVE A "CLASS A" FINISH WHEN EXPOSED OR A "CLASS B" FINISH WHEN RECEIVING PLASTER OR TILE AS PER SPECIFICATION SECTION 03 31 00 CAST-IN-PLACE STRUCTURAL CONCRETE.

4.0 CONCRETE MASONRY

4.1 MASONRY CONSTRUCTION SHALL CONFORM TO SPECIFICATION FOR MASONRY STRUCTURES (ACI 530.1) UON.

4.2 STRENGTH OF MASONRY MATERIALS SHALL BE AS FOLLOWS:

A. CONCRETE MASONRY UNITS SHALL BE NORMAL WEIGHT, GRADE N, TYPE 1, CONFORMING TO ASTM C-90 AND HAVE A MINIMUM COMPRESSIVE STRENGTH OF 13.1 MPa ON THE NET AREA.

B. MORTAR SHALL CONFORM TO ASTM C-270 TYPE S.

C. GROUT FOR MASONRY SHALL BE NORMAL WEIGHT AND HAVE A MINIMUM COMPRESSIVE STRENGTH OF 14 MPa AT 28 DAYS. GROUT SHALL CONFORM TO ASTM C476M. GROUT LIFTS SHALL NOT EXCEED 1500mm.

D. REINFORCED MASONRY SHALL HAVE A STRENGTH F'm = 10.3 MPa. (F'm IS THE COMPRESSIVE STRENGTH OF THE MASONRY AT 28 DAYS AS DETERMINED BY PRISM TESTS).

4.3 ALL VERTICAL REINFORCEMENT FOR CONCRETE MASONRY SHALL BE ASTM A615M-07, GRADE 420 MPa. ALL SPLICES SHALL BE LAPPED 48 BAR DIAMETERS MINIMUM.

4.4 CMU CELLS THAT REQUIRE VERTICAL REINFORCING BARS AS INDICATED ON THE CONTRACT DRAWINGS AND/OR SPECS SHALL HAVE REINF BARS PLACED IN CENTERS OF CMU CELLS AND CONTINUOUSLY GROUTED UON.

4.5 CONTRACTOR SHALL COORDINATE LOCATION OF ALL OPENINGS SEE ARCH, MECH, ELEC, AND PLUMBING SHEETS FOR SIZE AND LOCATION OF OPENINGS. PROVIDE SINGLE COURSE SOLID GROUTED BOND BEAMS REINFORCED WITH 2 #14 OVER ALL OPENINGS IN CMU WALLS. BEAR BOND BEAMS AT LEAST 200mm ON SOLID GROUTED, VERTICALLY REINFORCED CMU AT EACH SIDE OF THE OPENING. PASS VERTICAL JAMB REINFORCING THROUGH THE BOND BEAM AND EXTEND TO TOP OF WALL. NO OPENING IN CMU WALLS SHALL EXCEED 800mm.

4.6 HORIZONTAL JOINT REINFORCING TO BE GALVANIZED, STANDARD CLASS, LADDER TYPE, CONFORMING TO ASTM A 82, SPACED AT EVERY OTHER COURSE UNO. SIDE RODS TO BE 5mm WITH 4mm CROSS RODS. PROVIDE ONE-PIECE PREFABRICATED REINFORCING UNITS AT EVERY COURSE AT ALL WALL CORNERS AND INTERSECTIONS AND IN THE FIRST TWO COURSES ABOVE AND BELOW MASONRY OPENINGS. PROVIDE LAP AS RECOMMENDED BY THE MANUFACTURER WITH A MINIMUM OF 300mm. DISCONTINUE HORIZONTAL JOINT REINFORCING AT CONTROL JOINTS.

4.7 ALL MASONRY TO BE CONSTRUCTED USING A RUNNING BOND PATTERN. FULL BED AND HEAD JOINTS MUST BE USED. ALL CORNERS TO BE TIED BY MASONRY BOND.

4.8 DOWEL REINFORCED MASONRY WALLS TO FOUNDATION. SIZE DOWELS TO MATCH WALL REINFORCEMENT. LOCATE DOWELS IN CELLS TO CONTAIN WALL REINFORCEMENT. LAP DOWELS AND WALL REINFORCEMENT A MINIMUM OF 48 BAR DIAMETERS UNO.

4.9 DURING CONSTRUCTION, COVER AND PROTECT THE TOPS OF MASONRY WALLS AT THE END OF EACH DAY.

UNLESS OTHERWISE NOTED, LINEAR DIMENSIONS SHOWN ARE IN MILLIMETERS.

COMMONWEALTH OF PENNSYLVANIA
REGISTERED PROFESSIONAL
JOSEPH D. MEIER
ENGINEER
PE-039028E

US ARMY CORPS OF ENGINEERS AFGHANISTAN NORTH DISTRICT

U.S. ARMY ENGINEER DISTRICT, AFGHANISTAN
CORPS OF ENGINEERS
APO AE 09356

DESIGNED BY: JDM
DWN BY: RMS
CKD BY: EPS
REVIEWED BY: JH
SUBMITTED BY: BAKER

DATE: 3-24-2011
CONTRACT NO. W912ER-09-D-0002
DRAWING CODE:
FILE NAME:
PLOT SCALE: NONE
PLOT DATE: 3/24/2011
REV. 0

SITE ADAPT DESIGN
AD23 - ADMIN BUILDING - ARCH SPAN
ABBREVIATIONS AND GENERAL NOTES

SHEET REFERENCE NUMBER:
S-001

5.0 STRUCTURAL STEEL

5.1 STRUCTURAL STEEL WORK IS TO BE DESIGNED AND CONSTRUCTED IN ACCORDANCE WITH THE AMERICAN INSTITUTE OF STEEL CONSTRUCTION (AISC) "SPECIFICATIONS FOR STRUCTURAL STEEL BUILDINGS" (THIRTEENTH EDITION) AND THE "CODE OF STANDARD PRACTICE FOR STEEL BUILDINGS AND BRIDGES".

5.2 STRUCTURAL STEEL, UNLESS NOTED OTHERWISE, SHALL CONFORM TO THE FOLLOWING:
- A. WIDE FLANGE SHAPES AND WT'S: ASTM A992.
- B. CHANNELS, ANGLES, PLATES AND MISC. CONNECTION MATERIAL: ASTM A-36.
- C. STEEL TUBING: ASTM A500, GRADE B, WITH FY = 290 MPa FOR ROUND AND FY = 315 MPa FOR RECTANGULAR.

5.3 PRIOR TO FABRICATION, THE STEEL FABRICATOR IS TO SUBMIT SHOP DRAWINGS SHOWING ERECTION PLANS, PIECE DRAWINGS, AND CONNECTION DETAILS TO THE CONTRACTING OFFICER FOR REVIEW.

5.4 STRUCTURAL STEEL FABRICATOR IS TO PROVIDE FOR VERTICAL AND HORIZONTAL FIELD ADJUSTMENT OF ALL SUPPORT ASSEMBLIES.

5.5 CUTS, HOLES, COPING, ETC REQUIRED FOR OTHER TRADES MUST BE SHOWN ON THE SHOP DRAWINGS AND MADE IN THE SHOP. CUTS OR BURNING OF HOLES IN THE FIELD WILL NOT BE PERMITTED.

5.6 FABRICATE FRAMING COMPONENTS IN THE SHOP TO THE GREATEST EXTENT POSSIBLE. IN GENERAL, STRUCTURAL STEEL CONNECTIONS TO BE SHOP AND FIELD WELDED. ALL WELDS SHALL BE 3/16" FILLET WELDS UNLESS NOTED OTHERWISE.

5.7 WELDING TO BE IN ACCORDANCE WITH THE AMERICAN WELDING SOCIETY (AWS) "STRUCTURAL WELDING CODE-ANSI/AWS D1.1/D1.1M" (LATEST EDITION). USE E70XX ELECTRODES UNLESS OTHERWISE INDICATED ON THE DRAWINGS.

5.8 POST INSTALLED BOLTS TO BE ADHESIVE TYPE ANCHORS. BOLTS SHALL BE CARBON STEEL THREADED RODS OF THE DIAMETER INDICATED ON THE DRAWINGS WITH APPROPRIATE NUT, WASHER AND INJECTABLE ADHESIVE MATERIAL. BASIS OF DESIGN ARE HILTI HVA ADHESIVE ANCHORS WITH STANDARD EMBEDMENT, MANUFACTURED BY HILTI FASTENING SYSTEMS. ANY ANCHOR MEETING PUBLISHED LOAD VALUES OF HILTI ANCHORS MAY BE USED WITH APPROPRIATE EMBEDMENT. INSTALL ANCHORS PER MANUFACTURERS RECOMMENDATIONS.

5.9 HEADED SHEAR STUDS CONNECTORS TO CONFORM TO ASTM A 108, GRADE 1015 OR 1020, COLD-FINISHED CARBON STEEL.

5.10 PAINT AND PROTECTION:
- A. STRUCTURAL STEEL, UNLESS INDICATED OTHERWISE, TO BE SHOP CLEANED PER SSPC SP3 AND PAINTED ONE SHOP COAT OF FABRICATOR'S STANDARD RUST INHIBITING PRIMER. TOUCH UP AFTER ERECTION.
- B. DO NOT PAINT STEEL WHERE ENCASED WITH CONCRETE, OR AT FIELD WELD AREAS.
- C. EXPOSED STRUCTURAL STEEL FOR BREEZEWAY ROOFS, EQUIPMENT PLATFORMS, ETC, TO BE HOT DIPPED GALVANIZED PER ASTM A-123
- D. GALVANIZED FASTENERS AND ACCESSORIES TO BE HOT DIPPED GALVANIZED PER ASTM A153/A153M.
- E. REPAIR DAMAGE TO GALVANIZED COATINGS USING ASTM A780 ZINC RICH PAINT.
- F. PROVIDE MINIMUM 75mm CONCRETE COVER FOR ALL STEEL BELOW GRADE.

6.0 METAL DECK

6.1 METAL DECK MUST BE DESIGNED AND DETAILED IN ACCORDANCE WITH THE STEEL DECK INSTITUTE (SDI) "DESIGN MANUAL FOR COMPOSITE DECKS, FORM DECKS AND ROOF DECKS" (LATEST EDITION).

6.2 ROOF DECK: 38mm, 0.88mm THICK, TYPE B, GALVANIZED, UNO.

6.3 ROOF DECK TO BE FASTENED TO THE SUPPORTING STEEL AT THE ENDS OF UNITS AND AT ALL INTERMEDIATE SUPPORTS WITH 16mm DIAMETER PUDDLE WELDS AT 300mm OC ACROSS THE WIDTH OF THE DECK IN A 36/4 PATTERN. DECK SIDE LAPS SHALL BE FASTENED WITH #10 TEK SCREWS AT TWO (2) EQUAL SPACES BETWEEN THE SUPPORTS. ANY SPLIT OR PARTIAL PANELS TO BE FASTENED TO THE SUPPORTING STRUCTURE IN EVERY VALLEY REGARDLESS OF ADJACENT FASTENER PATTERNS.

6.4 METAL DECK SUPPLIER TO PROVIDE LIGHT GAGE METAL DECK CLOSURE PIECES AND SHALL REINFORCE OR SUPPORT DECK AT OPENINGS AS REQUIRED, IN ACCORDANCE WITH THE SDI.

7.0 COLD-FORMED METAL FRAMING

7.1 SEE ARCHITECTURAL DRAWINGS FOR EXTENT OF COLD-FORMED METAL FRAMING, INCLUDING PARTITION WALLS AND CEILINGS. ALSO REFERENCE ARCHITECTURAL DRAWINGS FOR ADDITIONAL INFORMATION INCLUDING SHEATHING TYPE, FINISHES AND OPENINGS.

7.2 ALL COLD-FORMED METAL FRAMING MEMBERS SHALL CONFORM TO ASTM A1003M, STRUCTURAL GRADE ST230 (MPa), WITH A GALVANIZED COATING OF Z275 OR BETTER IN ACCORDANCE WITH ASTM A653M.

7.3 ALL COLD-FORMED METAL FRAMING MEMBERS SHALL HAVE THE FOLLOWING MINIMUM PROPERTIES:
- A. MINIMUM METAL THICKNESS:
  - TRACK = 1.37mm
  - CEILING JOIST = 1.09mm
  - WALL STUD/OTHER = 1.09mm
- B. MINIMUM FLANGE WIDTH:
  - TRACK = 38mm
  - CEILING JOIST = 35mm
  - WALL STUD/OTHER = 35mm
- C. MINIMUM MEMBER DEPTH:
  - CEILING JOIST = 152mm
  - WALL STUD/OTHER = 92mm

7.4 CEILING JOISTS HAVE BEEN DESIGNED TO CARRY 0.47KPA, INCLUDING SELF WEIGHT OF METAL FRAMING, TWO LAYERS OF GYPSUM WALL BOARD AND NOMINAL MEP LOADING. NO LIVE LOAD HAS BEEN INCLUDED. THE SPACE ABOVE THE CEILING IS NOT INTENDED FOR STORAGE OR TO BE USED AS A WALKWAY. PROVIDE CEILING JOIST FRAMING OF SIZE INDICATED IN NOTE 7.3 AND AS FOLLOWS:
- A. JOIST SPANS LESS THAN 4600: JOISTS SHALL BE SPACED AT 400 AND HAVE DIAGONAL OR SOLID BRIDGING AT EACH END AND AT THE MIDSPAN.
- B. JOIST SPANS BETWEEN 4600 AND 6400: JOISTS SHALL BE SPACED AT 400 AND HAVE DIAGONAL OR SOLID BRIDGING AT EACH END AND AT THE QUARTER POINTS.
- C. JOIST SPANS BETWEEN 6400 AND 7800: JOISTS SHALL BE SPACED AT 200 (OR DOUBLE JOISTS AT 400) AND HAVE DIAGONAL OR SOLID BRIDGING AT EACH END AND AT THE QUARTER POINTS.
- D. JOIST SPANS EQUAL TO OR OVER 7800: JOISTS SHALL HAVE DIAGONAL OR SOLID BRIDGING AT EACH END AND AT THE QUARTER POINTS AND SHALL BE SUSPENDED FROM THE ARCH-SPAN TABS ABOVE AT 1200 EACH WAY.
- E. HEADERS WITH SPANS LESS THAN OR EQUAL TO 3000 CARRYING CEILING JOISTS WITH UP TO 5400 IN TRIBUTARY WIDTH SHALL BE FULLY CONNECTED TO EACH JOIST AND SHALL BE DOUBLE MEMBERS. HEADERS WITH A LARGER SPAN OR MORE TRIBUTARY WIDTH SHALL BE SUSPENDED FROM THE ARCH-SPAN TABS AT 1200 OC. SEE GENERAL NOTE 8.1 FOR MAXIMUM LOADS ON TABS.

7.5 WALL STUDS HAVE BEEN DESIGNED TO CARRY CEILING LOADING NOTED IN NOTE 7.3, UP TO 7800 IN TRIBUTARY WIDTH. PROVIDE WALL STUD FRAMING OF SIZE INDICATED IN NOTE 7.3 AND AS FOLLOWS:
- A. WALL HEIGHTS LESS THAN 3000: STUDS SHALL BE SPACED AT 400 AND HAVE BLOCKING AT 1200 MAXIMUM.
- B. WALL HEIGHTS BETWEEN 3000 AND 4900: STUDS SHALL BE SPACED AT 300 AND HAVE BLOCKING AT 1200 MAXIMUM.
- C. WALL HEIGHTS OVER 4900 WHICH MUST ALSO SUPPORT CEILING WEIGHT SHALL BE DESIGNED BY THE METAL FRAMING CONTRACTOR'S ENGINEER.

7.6 WALL STUDS WITHOUT CEILING LOADS MUST BE BRACED BACK TO THE ARCH-SPAN TABS ABOVE AT 1200 MAXIMUM. SEE ARCHITECTURAL DRAWINGS FOR BRACING DETAILS. DO NOT SECURE TOPS OF STUD WALLS TO THE UNDERSIDE OF THE ARCH-SPAN BUILDING PANELS. THESE STUDS HAVE BEEN DESIGNED TO CARRY ONLY THEIR OWN SELF WEIGHT DURING A SEISMIC EVENT. PROVIDE WALL STUD FRAMING OF SIZE INDICATED IN NOTE 7.3 AND AS FOLLOWS:
- A. WALL HEIGHTS LESS THAN 5000: STUDS SHALL BE SPACED AT 400 AND HAVE BLOCKING AT 1200 MAXIMUM.
- B. WALL HEIGHTS BETWEEN 5000 AND 5500: STUDS SHALL BE SPACED AT 300 AND HAVE BLOCKING AT 1200 MAXIMUM.
- C. WALL HEIGHTS BETWEEN 5500 AND 6400: STUDS SHALL BE SPACED AT 200 AND HAVE BLOCKING AT 1200 MAXIMUM.
- D. CANTILEVERED HEIGHT PAST BRACE POINT IS NOT TO EXCEED 1/4 OF THE HEIGHTS NOTED IN NOTES A, B, AND C. IE, FOR STUDS SPACED AT 400 WITH BLOCKING AT 1200 MAXIMUM, HEIGHT ABOVE THE BRACE IS NOT TO EXCEED 1250.

7.7 FOR WALLS THAT CARRY CEILING LOAD AND EXTEND PAST THE CEILING, APPLY NOTES 7.4 AND 7.5 AS REQUIRED. USE THE MORE SEVERE WALL CONSTRUCTION FOR THE ENTIRE WALL CONSTRUCTION.

7.8 FOR PROVIDE DOUBLE MEMBER JOISTS OR WALL STUDS AT EACH SIDE OF OPENINGS.

7.9 ALL CONNECTIONS SHALL BE MADE WITH CORROSION RESISTANT (ASTM A153M), SELF-DRILLING, SELF-TAPPING STEEL DRILL SCREWS IN ACCORDANCE WITH ASTM C1513.

7.10 FABRICATE COLD FORMED METAL FRAMING AND ACCESSORIES PLUMB, SQUARE AND TRUE TO LINE, WITH CONNECTIONS SECURELY FASTENED ACCORDING TO AISI STANDARD FOR COLD FORMED STEEL FRAMING.

7.11 FRAMING COMPONENTS ARE TO BE CUT SQUARELY FOR ATTACHMENT TO PERPENDICULAR MEMBERS OR AS REQUIRED FOR AN ANGULAR FIT AGAINST ABUTTING MEMBERS.

7.12 CUT FRAMING MEMBERS BY SAWING OR SHEATHING, DO NOT TORCH CUT.

7.13 INSTALL FRAMING MEMBERS IN ONE-PIECE LENGTHS.

7.14 INSTALL TEMPORARY BRACING AND SUPPORTS AS REQUIRED TO SECURE FRAMING DURING CONSTRUCTION. MAINTAIN BRACING AND SUPPORTS IN PLACE UNTIL THE STRUCTURE HAS BEEN COMPLETED WITH ALL CONNECTIONS AND PERMANENT BRACING SECURED.

8.0 ARCH SPAN

8.1 USE UBM OR ABM MACHINES OR EQUIVALENT THAT WILL PRODUCE THE ARCH SPAN PANELS OF PROFILE AND THICKNESS NOTED ON THE DRAWINGS.

8.2 ARCH-SPAN BASIS OF DESIGN ARE THE 120 PROFILE PANELS PRODUCED BY MIC INDUSTRIES MACHINES WITH A STEEL THICKNESS OF 1.06mm (19GA). SUBSTITUTE PANELS MUST MEET THE NOMINAL STRENGTH CAPACITIES LISTED WITH THE PANEL PROFILE SHOWN IN DETAIL 2/S-202. SUBSTITUTE PANEL STRENGTH CAPACITIES SHALL ACCOUNT FOR THE REDUCTION TO NOMINAL NEGATIVE MOMENT AND AXIAL LOAD CAPACITIES DUE TO THE CURVING PROCESS. CONTRACTORS PROVIDING SUBSTITUTE PANELS MUST ALSO REVISE DETAILS/DIMENSIONS WORKED SPECIFICALLY FOR THE PANEL PROFILES USED AS THE BASIS OF DESIGN. THIS INCLUDES, BUT MAY NOT BE LIMITED TO, FOUNDATIONS, ENDWALL OPENINGS, SIDEWALL OPENINGS, OPENING FRAMES AND OUT-BUILDING ROOF PANELS.

8.3 ARCH SPAN PANELS WILL BE ROLLED ON-SITE USING GALVANIZED STEEL COILS CONFORMING TO ASTM A653M-06A, STRUCTURAL QUALITY (SS), GRADE 340, CLASS Z275 FOR GALVANIZED COATING.

8.4 ENDWALL PANELS SHALL BE THE SAME PROFILE AND THICKNESS AS THE ARCH SPAN PANELS USED FOR THE ROOF.

8.6 CONTRACTOR IS TO ENGAGE AN EXPERIENCED INSTALLER TO ERECT THE ARCH SPAN BUILDING. CONSTRUCTION CREWS SHALL BE TRAINED IN THE USE OF THE PANEL ROLLING MACHINES AND IN THE ERECTION OF THE PANELS.

8.7 EXERCISE CARE IN DELIVERING, UNLOADING, STORING AND ERECTING STEEL COILS AND BUILDING PANELS TO PREVENT BENDING, WARPING, TWISTING AND SURFACE DAMAGE.

8.8 ERECT PANELS TRUE TO LINE, LEVEL AND PLUMB. ROOF LINE SHALL BE STRAIGHT AND LEVEL, RADIUS SHALL BE CONSISTENT THROUGHOUT AND ENDWALLS SHALL BE STRAIGHT AND PLUMB.

8.9 WINDOW AND DOOR OPENINGS SHALL BE FRAMED PER DETAILS ON THE DRAWINGS.

8.10 INCIDENTAL OPENINGS (COORDINATE WITH ARCHITECTURAL AND MEP DRAWINGS) IN THE PANELS SHALL BE NO MORE THAN 200mm IN DIAMETER AND SHALL BE PLACED THROUGH A "FLAT" PORTION OF THE PANEL. OPENINGS SHALL NOT BE CUT THROUGH ANY VERTICAL OR DIAGONAL RIB.

8.11 HANGER TABS AS DETAILED ON THE DRAWINGS SHALL BE INSTALLED PER LAYOUT ON THE TYPICAL BUILDING SECTION. ALL SUSPENDED LOADS SHALL BE CONNECTED TO HANGER TABS. HANGER TABS AT LESS THAN 30 DEGREES FROM VERTICAL CAN CARRY NO MORE THAN 100 KG EACH. HANGER TABS AT MORE THAN 30 DEGREES FROM VERTICAL CAN CARRY NO MORE THAN 25 KG EACH.

9.0 STRUCTURAL DESIGN CRITERIA

9.1 ALL DESIGNS SHALL CONFORM TO THE PROVISIONS OF THE IBC 2009 AND ASCE 7-05. OCCUPANCY CATEGORY II.

9.2 DESIGN LOADS

9.2.1 DEAD LOADS (PER IBC 2009 & UFC 3-301-01)

MECH/ELEC/PLUMBING	0.10 kPa
SUSPENDED CEILING	0.24 kPa
INSULATION	0.07 kPa
ARCH SPAN STEEL: 120 PROFILE x 1.06mm	0.17 kPa
TOTAL DEAD LOAD	0.58 kPa
MINIMUM (FOR UPLIFT)	0.24 kPa

9.2.2 LIVE LOADS (PER IBC 2009 & UFC 3-301-01)

ROOF		0.57 kPa
SLAB ON GRADE:	TYPICAL	4.80 kPa
	STORAGE/LATRINE	7.18 kPa
	VEHICLE LOADS	11.97 kPa

9.2.3 SNOW LOADS (PER IBC 2009 & UFC 3-301-01)

GROUND SNOW LOAD (Pg)	1.2 kPa
SNOW IMPORTANCE FACTOR (I)	1.0
SNOW EXPOSURE FACTOR (Ce)	0.9
THERMAL FACTOR (Ct)	1.1

9.2.4 WIND LOADS (PER IBC 2009)

BASIC WIND SPEED	137 km/h
WIND IMPORTANCE FACTOR	1.0
WIND EXPOSURE CATEGORY	C
DIRECTIONALITY COEFFICIENT (Kd)	0.85
TOPOGRAPHIC FACTOR (Kzt)	1.0

9.2.5 SEISMIC LOADS (PER IBC 2009 & UFC 3-310-04)

SEISMIC IMPORTANCE FACTOR (Ie)	1.0
SEISMIC SITE CLASS	D
S_s =	2.40
S_1 =	1.20
S_{DS} =	1.6
S_{D1} =	1.2
SEISMIC DESIGN CATEGORY	E

SEISMIC RESISTING SYSTEM:
- -STRUCTURAL STEEL SYSTEMS NOT SPECIFICALLY DETAILED FOR SEISMIC RESISTANCE
- -RESPONSE MODIFICATION FACTOR (R) 2 (CONSERVATIVE)
- -RESPONSE COEFFICIENT (Cs) 0.5

SEISMIC ANALYTICAL PROCEDURE = EQUIV LATERAL FORCE

9.3 FOUNDATION DESIGN CRITERIA

9.3.1 FOUNDATION DESIGN IS BASED UPON THE FOLLOWING SOIL PARAMETERS:
ASSUMED NET ALLOWABLE SOIL BEARING PRESSURE FOR ALL SPREAD FOOTINGS: 72 kPa

9.3.2 ASSUMED LATERAL EARTH PRESSURE PARAMETERS:
- SOIL DENSITY = 1800 KG/M^3
- COEFFICIENT OF ACTIVE PRESSURE (KA) = 0.41
- COEFFICIENT OF AT-REST PRESSURE (KO) = 0.58
- COEFFICIENT OF PASSIVE EARTH PRESSURE (KP) = 2.44
- ANGLE OF INTERNAL FRICTION (PHI) = 25 DEGREES
- COEFFICIENT OF FRICTION (U) = 0.35
- MODULUS OF SUB-GRADE REACTION (KS) = 4150 G/CM^3

9.3.3 FROST DEPTH: ASSUMED TO BE 800mm

UNLESS OTHERWISE NOTED, LINEAR DIMENSIONS SHOWN ARE IN MILLIMETERS.

COMMONWEALTH OF PENNSYLVANIA REGISTERED PROFESSIONAL JOSEPH D. MEIER ENGINEER PE-039026E

US ARMY CORPS OF ENGINEERS AFGHANISTAN NORTH DISTRICT

SYMBOL	DESCRIPTION	DATE	APPR.

DESIGNED BY: JDM | DWN BY: RMS | CKD BY: EPS | REVIEWED BY: JH | SUBMITTED BY: BAKER

DATE: 3-24-2011 | CONTRACT NO. W912ER-09-D-0002 | DRAWING CODE: | FILE NAME: | PLOT SCALE: NONE | PLOT DATE: 3/24/2011 | REV. 0

U.S. ARMY ENGINEER DISTRICT, AFGHANISTAN
CORPS OF ENGINEERS
APO AE 09356

SITE ADAPT DESIGN

AD23 - ADMIN BUILDING - ARCH SPAN
GENERAL NOTES AND DESIGN CRITERIA

SHEET REFERENCE NUMBER:
S-002

3/24/2011 1:32 PM

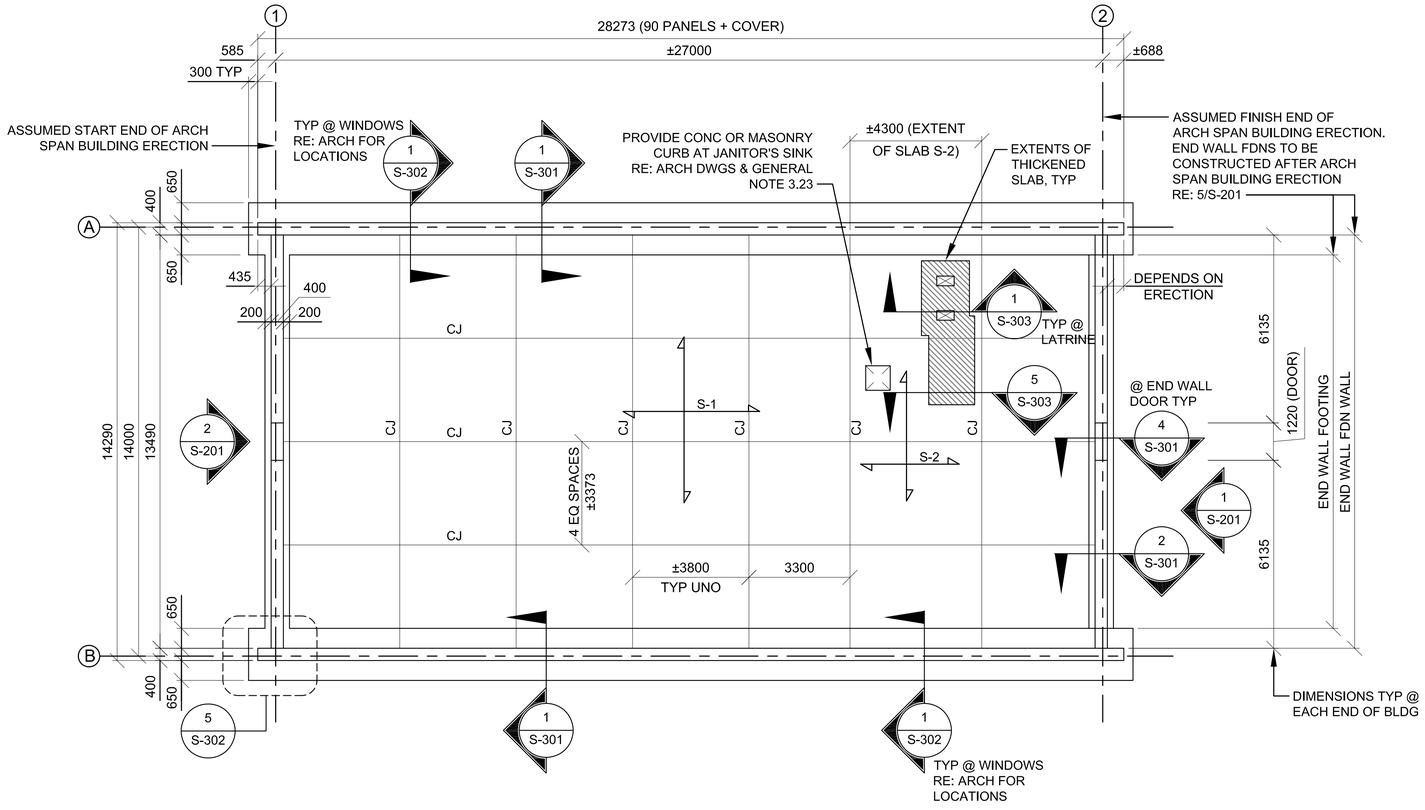

FOUNDATION PLAN

1 / S-101

SCALE: 1:100

FOUNDATION PLAN NOTES:

1. RE: DRAWINGS S-001 AND S-002 FOR GENERAL NOTES AND DESIGN CRITERIA.
2. COORDINATE DIMENSIONS, WALL OPENINGS, ELEVATIONS, SECTIONS, AND DETAILS WITH ARCHITECTURAL DRAWINGS.
3. TOP OF SLAB ELEVATION MUST BE COORDINATED WITH SITE ADAPT CIVIL DRAWINGS. TOP OF FLOOR SLAB IS AT THE DATUM ELEVATION = 0. ALL ELEVATIONS ARE REFERENCED FROM THIS ELEVATION.
4. BOTTOM OF CONCRETE FOOTING ELEVATIONS = -950 (BELOW TOP OF SLAB, TYP UNO).

5A. S-1 DENOTES A 100 CONCRETE SLAB-ON-GRADE REINFORCED WITH #10 @ 400. PLACE SLAB OVER 0.25 VAPOR RETARDER AND 100 COMPACTED GRANULAR SUB-BASE MATERIAL SUCH AS AASHTO #57 STONE.

5B. S-2 DENOTES A 150 CONCRETE SLAB-ON-GRADE REINFORCED WITH #14 @ 400. PLACE SLAB OVER 0.25 VAPOR RETARDER AND 100 COMPACTED GRANULAR SUB-BASE MATERIAL SUCH AS AASHTO #57 STONE. THIS NOTE ONLY APPLIES TO BUILDINGS WITH LATRINE FACILITIES.

6. SPACE SLAB CONTROL/CONSTRUCTION JOINTS AS SHOWN. CJ = CONTROL OR CONSTRUCTION JOINT, RE: 2/S-501.
7. PROVIDE ADDITIONAL SLAB REINFORCEMENT AT ALL RE-ENTRANT CORNERS, RE: 8/S-501.
8. RE: DRAWING S-501 FOR TYPICAL FOUNDATION AND SLAB DETAILS.
9. LOCATION OF FLOOR DRAINS ARE NOT SHOWN, COORDINATE LOCATIONS AND SLOPE OF SLAB WITH PLUMBING AND ARCHITECTURAL DRAWINGS.
10. COORDINATE MECHANICAL PENETRATIONS W/ M/E/P DRAWINGS.
11. PROVIDE REINFORCED CONCRETE WALK-OFF MATS AT ALL EXTERIOR DOORS RE: A-503 FOR DETAILS AND ARCHITECTURAL FLOOR PLAN FOR LOCATIONS.

N

0 2000 4000

SCALE: 1:100

UNLESS OTHERWISE NOTED, LINEAR DIMENSIONS SHOWN ARE IN MILLIMETERS.

COMMONWEALTH OF PENNSYLVANIA
REGISTERED PROFESSIONAL
JOSEPH D. MEIER
PE-039028E
14-Mar-11

US ARMY CORPS OF ENGINEERS
AFGHANISTAN NORTH DISTRICT

SYMBOL	DESCRIPTION	DATE	APPR.	SYMBOL	DESCRIPTION	DATE	APPR.

DESIGNED BY: JDM
DWN BY: RMS
CKD BY: EPS
REVIEWED BY: JH
SUBMITTED BY:
DATE: 3/24/2011
CONTRACT NO. W912ER-09-D-0002
DRAWING CODE:
FILE NAME: AD23-FDN-FOUNDATION-PLAN-S-101.DWG
PLOT SCALE: 1:100
PLOT DATE: 3/24/2011
REV: 0

BAKER

U.S. ARMY ENGINEER DISTRICT, AFGHANISTAN
CORPS OF ENGINEERS
APO AE 09356

SITE ADAPT DESIGN
AD23 - ADMIN BUILDING - ARCH SPAN
FOUNDATION PLAN

SHEET REFERENCE NUMBER:
S-101

A1 Size 594mm x 841mm

3/24/2011 1:32 PM

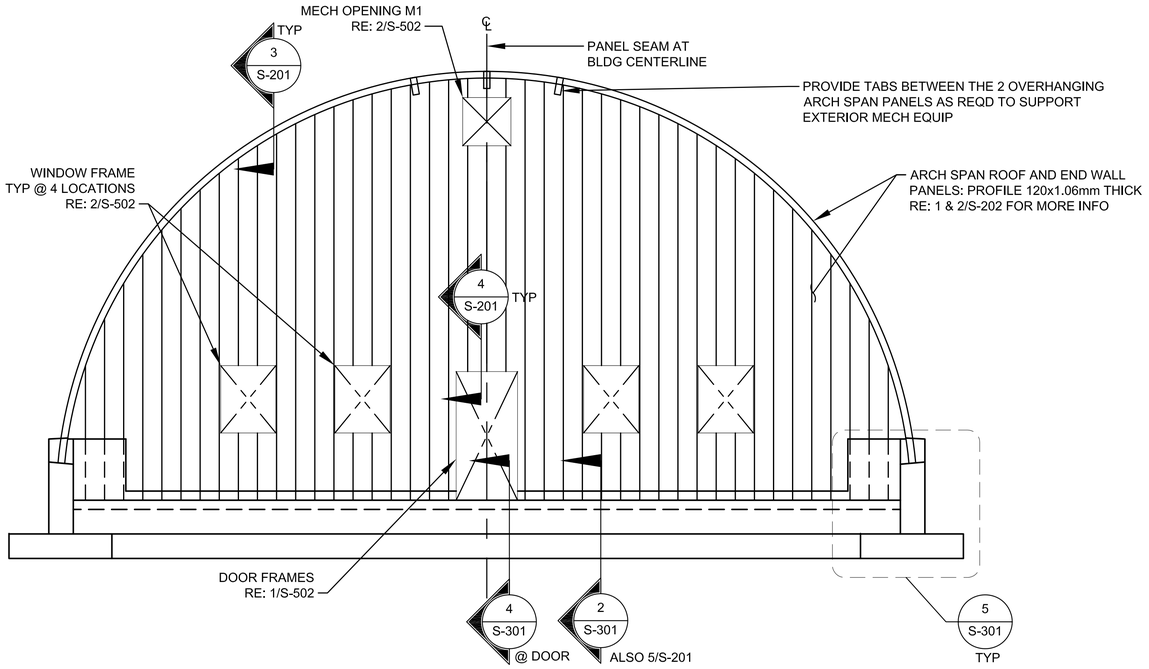

1 S-201 EAST ELEVATION

SCALE: 1:50

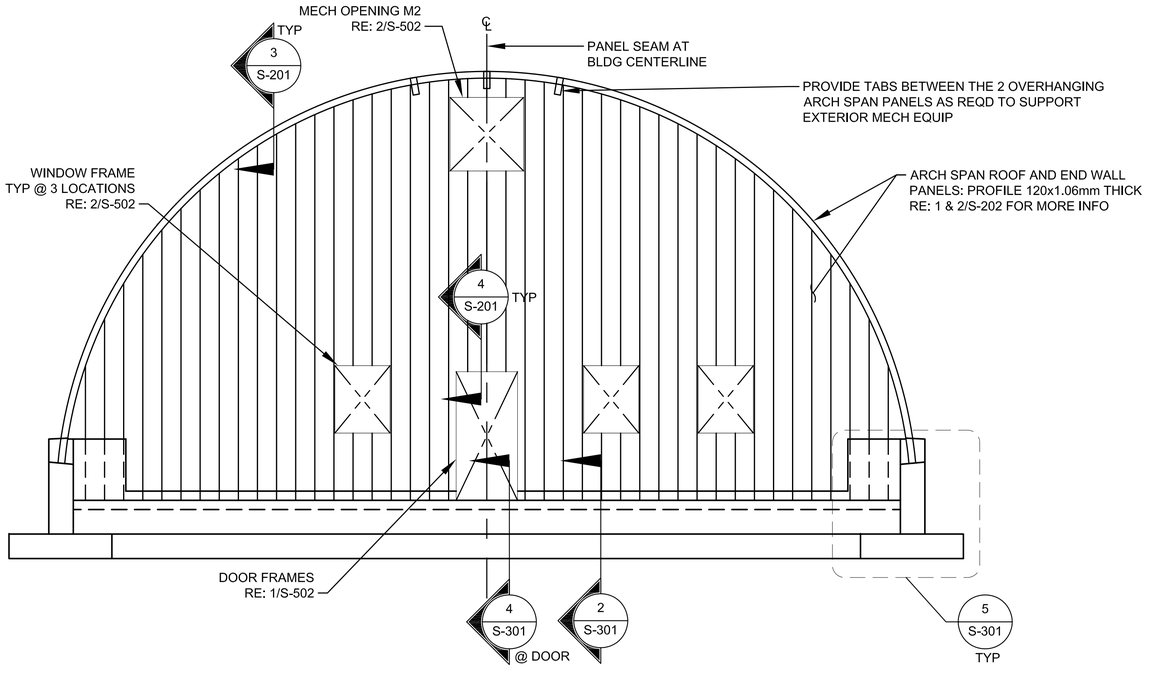

2 S-201 WEST ELEVATION

SCALE: 1:50

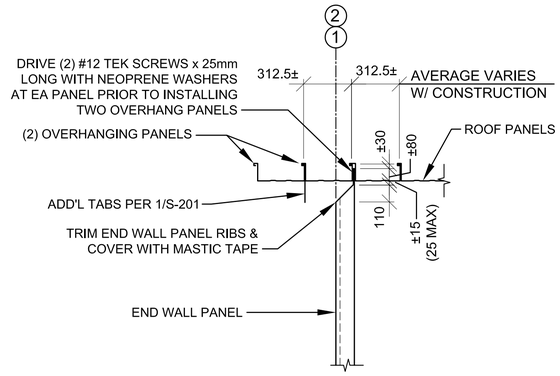

3 S-201 SECTION

SCALE: 1:20

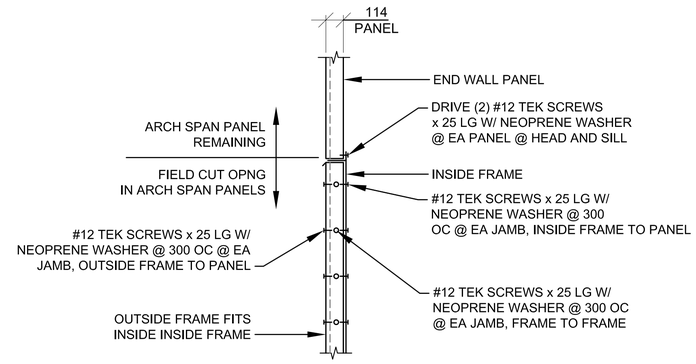

4 S-201 SECTION

SCALE: 1:20

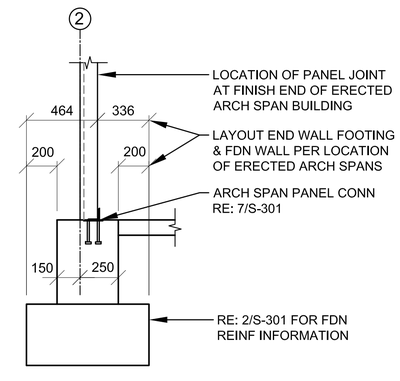

5 S-201 SECTION

SCALE: 1:20

0 500 1000 2000
SCALE: 1:50

0 200 400 800
SCALE: 1:20

UNLESS OTHERWISE NOTED,
LINEAR DIMENSIONS
SHOWN ARE IN MILLIMETERS.

COMMONWEALTH OF PENNSYLVANIA
REGISTERED PROFESSIONAL
JOSEPH D. MEIER
PE-039929E
3-24-11

US ARMY CORPS
OF ENGINEERS
AFGHANISTAN NORTH
DISTRICT

SYMBOL	DESCRIPTION	DATE	APPR.	SYMBOL	DESCRIPTION	DATE	APPR.

DESIGNED BY: JDM
DWN BY: RMS
CKD BY: EPS
REVIEWED BY: JH
SUBMITTED BY:
DATE: 3/24/2011
CONTRACT NO. W912ER-09-D-0002
DRAWING CODE:
FILE NAME: AD23-ADMIN-BUILDING-ELEVATIONS-S-201.DWG
PLOT SCALE: 1:50
PLOT DATE: 3/24/2011
REV: 0

BAKER

U.S. ARMY ENGINEER DISTRICT, AFGHANISTAN
CORPS OF ENGINEERS
APO AE 09356

SITE ADAPT DESIGN

AD23 - ADMIN BUILDING - ARCH SPAN

BUILDING ELEVATIONS AND DETAILS

SHEET
REFERENCE
NUMBER:

S-201

3/24/2011 1:33 PM

A1 Size 594mm x 841mm

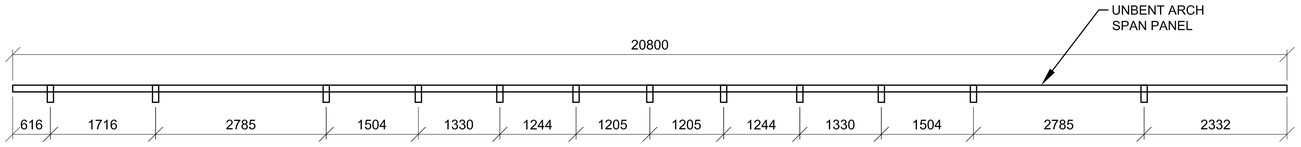

TAB LAYOUT ON PRE-BENT PANEL

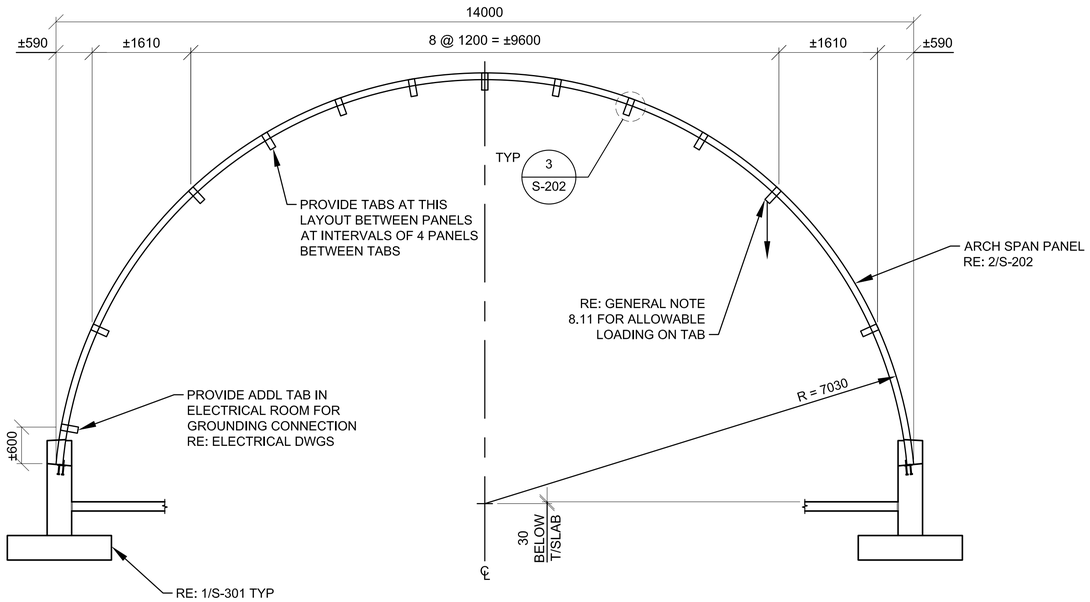

1 S-202 BUILDING SECTION

SCALE: 1:50

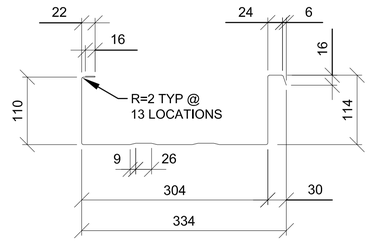

NOMINAL STRENGTH VALUES PER PANEL
(WITHOUT FACTOR OF SAFETY)

SHEAR : Vn = 1093.16 kg
AXIAL COMPRESSION : Pn = 5542.9 kg*
POSTITIVE MOMENT : +Mn = 494.6 kg-m
NEGATIVE MOMENT : -Mn = 264.75 kg-m*

* THE CURVING PROCESS REDUCES THE NOMINAL STRENGTH OF ARCH-SPAN PANELS IN NEGATIVE FLEXURE AND COMPRESSION. THESE VALUES ARE BASED ON TESTING OF PANELS.

NOTE:
ALL DIMENSIONS ARE APPROXIMATE (±3mm)

2 S-202 120 PROFILE - PROVIDE 1.06mm (19GA) THICKNESS

SCALE: NTS

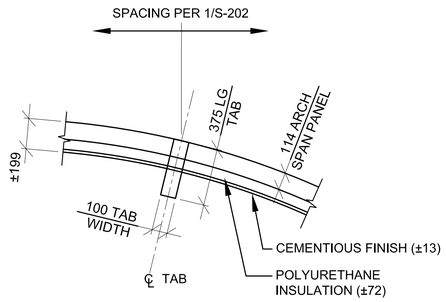

3 S-202 STEEL TAB DETAIL

SCALE: 1:20

0 500 1000 2000
SCALE: 1:50

0 200 400 800
SCALE: 1:20

UNLESS OTHERWISE NOTED,
LINEAR DIMENSIONS
SHOWN ARE IN MILLIMETERS.

COMMONWEALTH OF PENNSYLVANIA
REGISTERED PROFESSIONAL
JOSEPH D. MEIER
RE-039925E

US ARMY CORPS
OF ENGINEERS
AFGHANISTAN NORTH
DISTRICT

SYMBOL	DESCRIPTION	DATE	APPR.	SYMBOL	DESCRIPTION	DATE	APPR.

DESIGNED BY: JDM
DWN BY: RMS
CKD BY: EPS
REVIEWED BY: JH
SUBMITTED BY: BAKER
DATE: 4-21-2011
REV: 0
CONTRACT NO. W912ER-09-D-0002
DRAWING CODE:
FILE NAME: AD23-ADMIN-BUILDING-ARCH-SPAN-S-202.DWG
PLOT SCALE: 1:50
PLOT DATE: 4/21/2011

U.S. ARMY ENGINEER DISTRICT, AFGHANISTAN
CORPS OF ENGINEERS
APO AE 09356

SITE ADAPT DESIGN
AD23 - ADMIN BUILDING - ARCH SPAN
BUILDING SECTION AND DETAILS

SHEET
REFERENCE
NUMBER:
S-202

A1 Size 594mm x 841mm

4/21/2011 10:01 AM

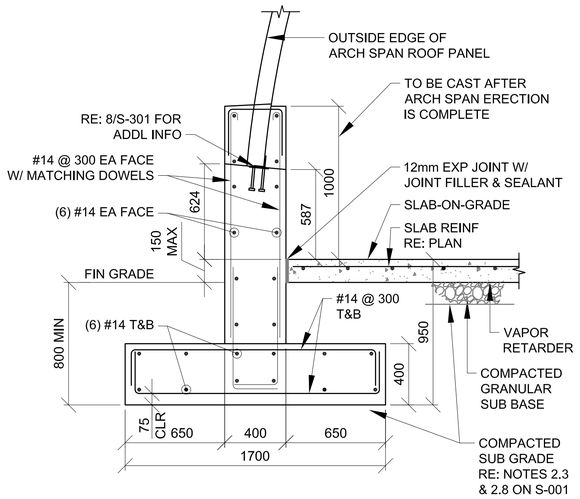

1 S-301 FOUNDATION WALL SECTION

SCALE: 1:20

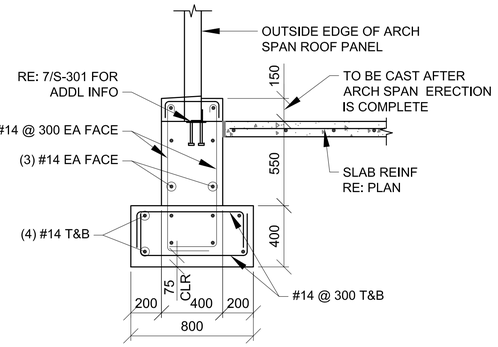

2 S-301 END WALL FOUNDATION SECTION

SCALE: 1:20

NOT USED

3 S-301 FDN WALL SECTION TYP @ DOOR

SCALE: 1:20

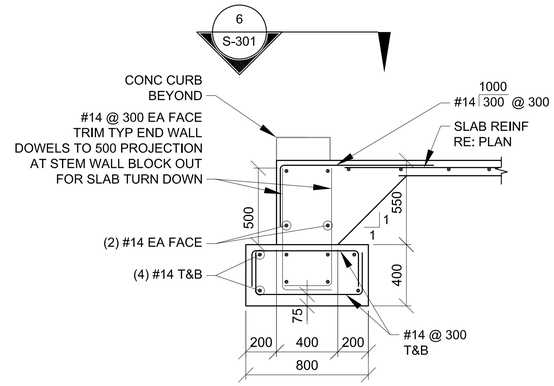

4 S-301 END WALL FDN SECTION TYP @ DOOR

SCALE: 1:20

NOTE:
PROVIDE 1220mm OPENING IN STEM WALL PER
PLAN (200mm WIDER THAN DOOR, 100mm EA SIDE)

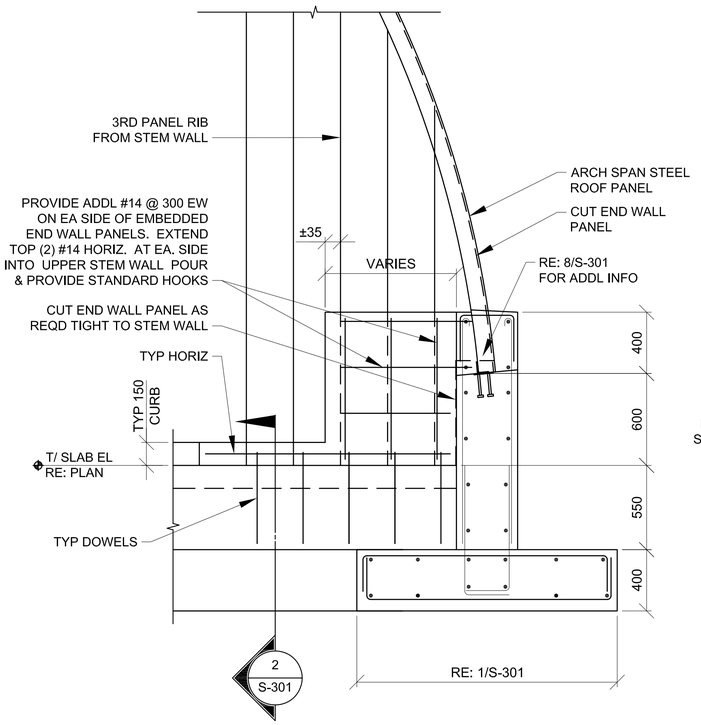

5 S-301 FOUNDATION END WALL SECTION

SCALE: 1:20

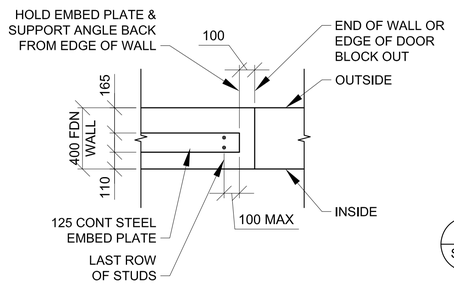

6 S-301 PLAN VIEW TYP AT END OF FDN WALL OR AT DOOR BLOCKOUT

SCALE: 1:20

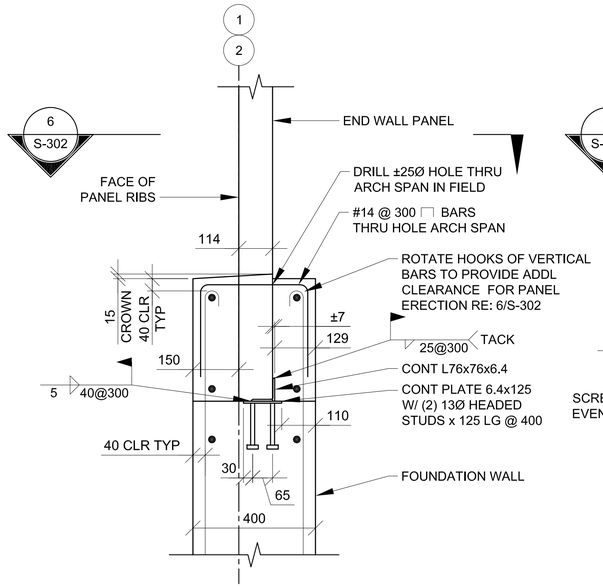

7 S-301 TYP ARCH SPAN END WALL CONN TO FDN WALL

SCALE: 1:10

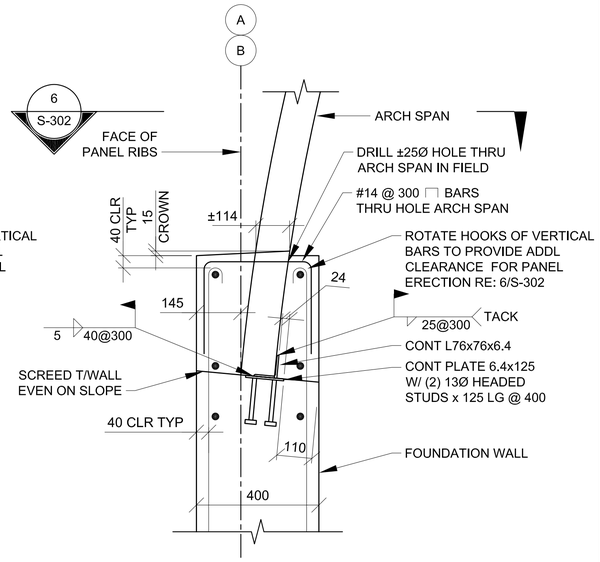

8 S-301 TYP ARCH SPAN SIDE WALL CONN TO FDN WALL

SCALE: 1:10

0 200 400 800
SCALE: 1:20

0 100 200 400
SCALE: 1:10

UNLESS OTHERWISE NOTED,
LINEAR DIMENSIONS
SHOWN ARE IN MILLIMETERS.

COMMONWEALTH OF PENNSYLVANIA
REGISTERED PROFESSIONAL
JOSEPH D. MEIER
PE-036925E

US ARMY CORPS
OF ENGINEERS
AFGHANISTAN NORTH
DISTRICT

SYMBOL	DESCRIPTION	DATE	APPR.	SYMBOL	DESCRIPTION	DATE	APPR.

DESIGNED BY: JDM
DWN BY: RMS
CKD BY: EPS
REVIEWED BY: JH
SUBMITTED BY:
DATE: 3-24-2011
CONTRACT NO. W912ER-09-D-0002
DRAWING CODE:
FILE NAME: AD23-FDN-PLAN-SECTIONS-S-301.DWG
PLOT SCALE: 1:100
PLOT DATE: 3/24/2011
REV: 0

BAKER

U.S. ARMY ENGINEER DISTRICT, AFGHANISTAN
CORPS OF ENGINEERS
APO AE 09356

SITE ADAPT DESIGN
AD23 - ADMIN BUILDING - ARCH SPAN
FOUNDATION SECTIONS

SHEET
REFERENCE
NUMBER:
S-301

3/24/2011 1:33 PM

A1 Size 594mm x 841mm

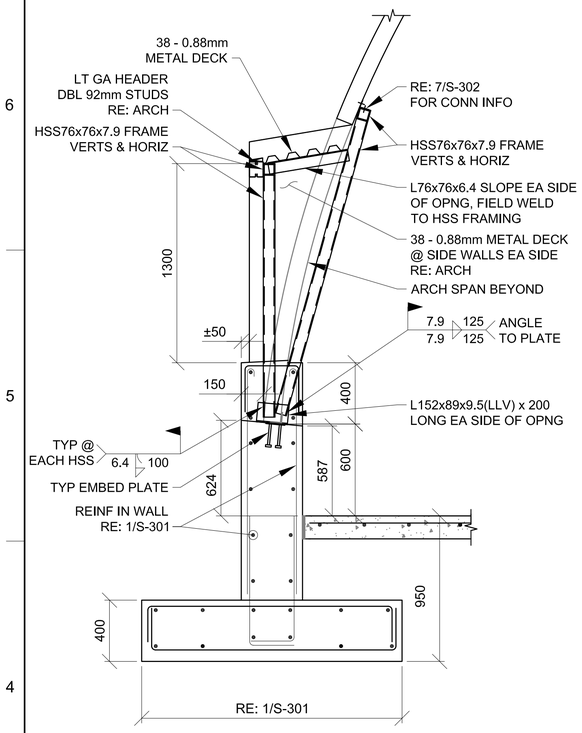

1 S-302 WINDOW DORMER SECTION
SCALE: 1:20

NOT USED

2 S-302 DOOR DORMER SECTION
SCALE: 1:20

NOT USED

3 S-302 DOOR DORMER WALL SECTION
SCALE: 1:20

NOT USED

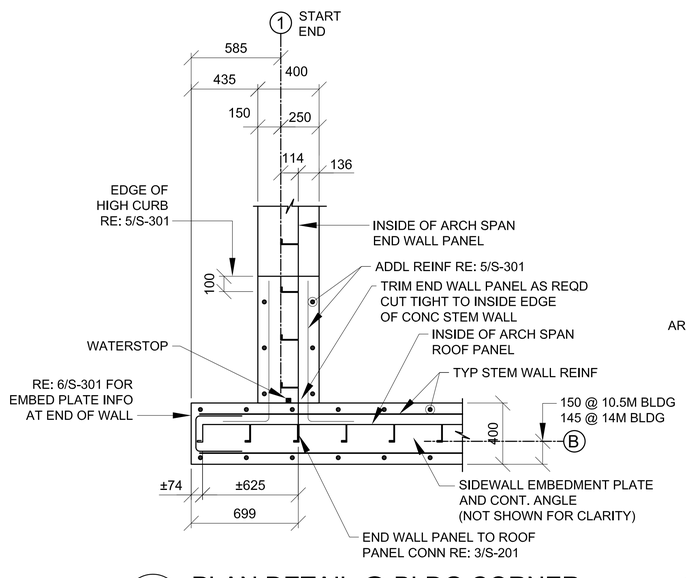

5 S-302 PLAN DETAIL @ BLDG CORNER
SCALE: 1:20

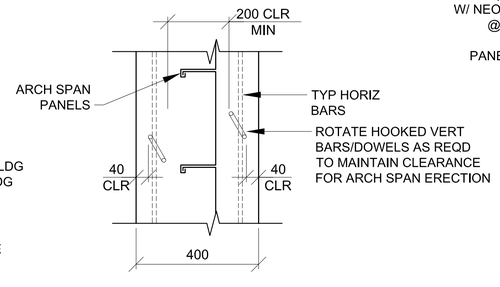

6 S-302 TYP FDN WALL PLAN DETAIL
SCALE: 1:10

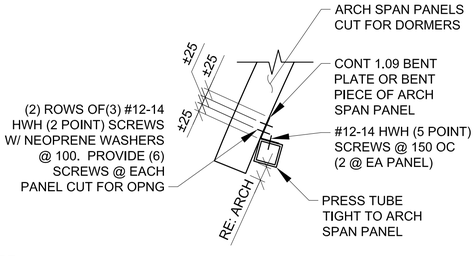

7 S-302 PANEL TO TUBE CONN DETAIL
SCALE: 1:10

NOT USED

4 S-302 PLAN VIEW TYP @ DOOR DORMER
SCALE: 1:20

0 200 400 800
SCALE: 1:20

0 100 200 400
SCALE: 1:10

UNLESS OTHERWISE NOTED,
LINEAR DIMENSIONS
SHOWN ARE IN MILLIMETERS.

COMMONWEALTH OF PENNSYLVANIA
REGISTERED PROFESSIONAL
JOSEPH D. MEIER
ENGINEER
PE-039925E
14 Mar 11

US ARMY CORPS
OF ENGINEERS
AFGHANISTAN NORTH
DISTRICT

SYMBOL	DESCRIPTION	DATE	APPR.	SYMBOL	DESCRIPTION	DATE	APPR.

DESIGNED BY: JDM
DWN BY: RMS
CKD BY: EPS
REVIEWED BY: JH
SUBMITTED BY: BAKER
DATE: 3/24/2011
REV: 0
CONTRACT NO. W912ER-09-D-0002
DRAWING CODE:
FILE NAME: AD23-ADMIN-BLDG-S-302.DWG
PLOT SCALE: 1:100
PLOT DATE: 3/24/2011

U.S. ARMY ENGINEER DISTRICT, AFGHANISTAN
CORPS OF ENGINEERS
APO AE 09356

SITE ADAPT DESIGN
AD23 - ADMIN BUILDING - ARCH SPAN
SECTIONS

SHEET
REFERENCE
NUMBER:
S-302

A1 Size 594mm x 841mm

3/24/2011 1:33 PM

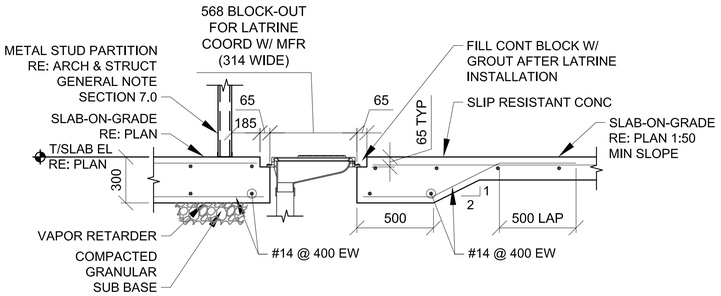

1 / S-303 LATRINE SECTION

SCALE: 1:20

NOT USED

2 / S-303 ABLUTION SECTION

SCALE: 1:20

NOT USED

3 / S-303 SHOWER SECTION

SCALE: 1:20

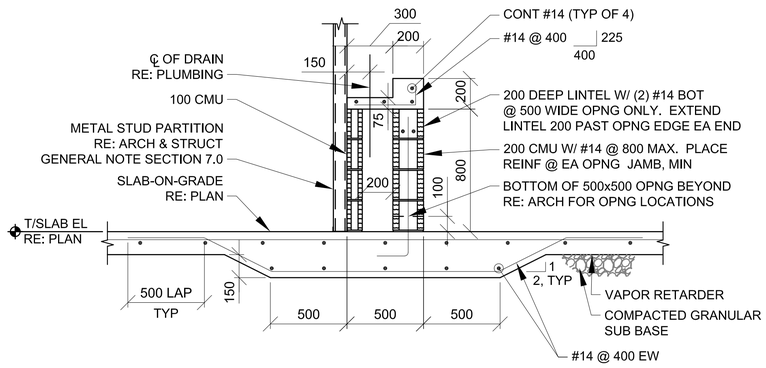

4 / S-303 NOT USED

SCALE: NTS

5 / S-303 LAVATORY SINK SECTION

SCALE: 1:20

NOT USED

6 / S-303 LAUNDRY SINK SECTION

SCALE: 1:20

0 200 400 800

SCALE: 1:20

UNLESS OTHERWISE NOTED,
LINEAR DIMENSIONS
SHOWN ARE IN MILLIMETERS.

COMMONWEALTH OF PENNSYLVANIA
REGISTERED PROFESSIONAL
JOSEPH D. MEIER
PE-039925E
14-MAR-11

US ARMY CORPS
OF ENGINEERS
AFGHANISTAN NORTH
DISTRICT

SYMBOL	DESCRIPTION	DATE	APPR.
SYMBOL	DESCRIPTION	DATE	APPR.

DATE: 3/24/2011
REV: 0
CONTRACT NO. W912ER-09-D-0002
DRAWING CODE:
FILE NAME:
PLOT SCALE: 1:100
PLOT DATE: 3/24/2011

DESIGNED BY: JDM
DWN BY: RMS
CKD BY: EPS
REVIEWED BY: JH
SUBMITTED BY:

BAKER

U.S. ARMY ENGINEER DISTRICT, AFGHANISTAN
CORPS OF ENGINEERS
APO AE 09356

SITE ADAPT DESIGN

AD23 - ADMIN BUILDING - ARCH SPAN

LATRINE SECTIONS

SHEET
REFERENCE
NUMBER:

S-303

3/24/2011 1:33 PM

A1 Size 594mm x 841mm

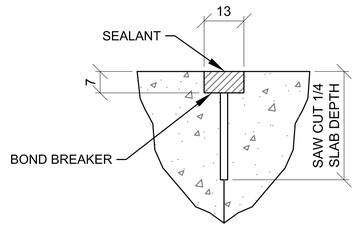

CONTROL JOINT DETAIL

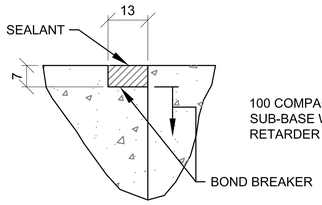

CONSTRUCTION JOINT DETAIL

1 / S-501 TYP CONCRETE SLAB JOINT FINISH DETAILS

SCALE: NTS

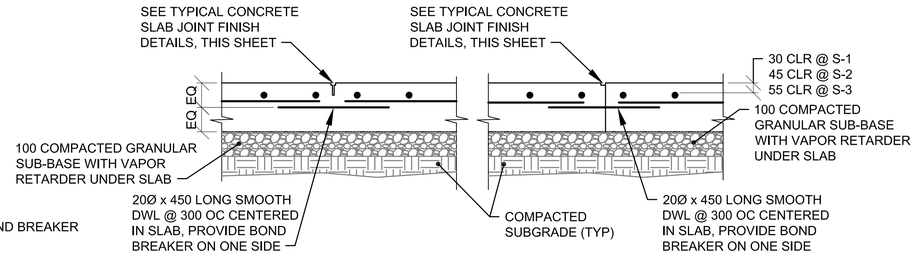

CONTROL JOINT DETAIL

CONSTRUCTION JOINT DETAIL

2 / S-501 TYP SLAB ON GRADE JOINT DETAILS

SCALE: NTS

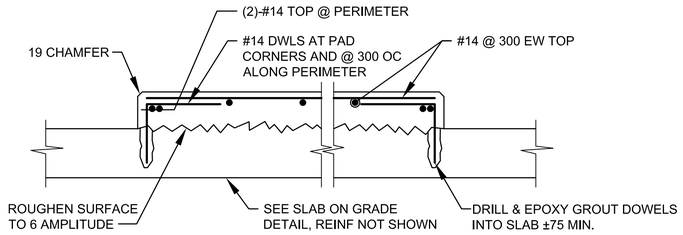

3 / S-501 INTERIOR EQUIPMENT PAD DETAIL

SCALE: NTS

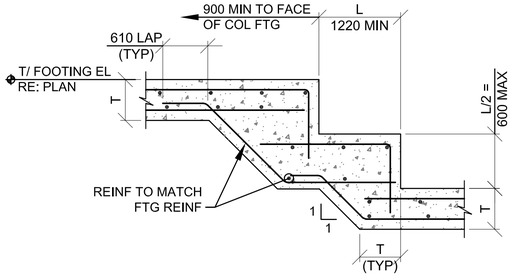

4 / S-501 STEPPED FOOTING (2 LAYERS REINF)

SCALE: NTS

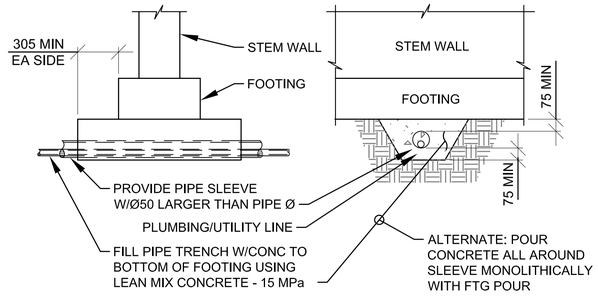

5 / S-501 UTILITY PIPE UNDER WALL FTG

SCALE: NTS

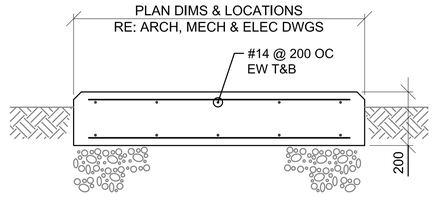

NOTES:
1. COORDINATE SIZE & LOCATION WITH EQUIPMENT REQUIREMENTS.
2. CHAMFER ALL EDGES 25 TYPICAL.

6 / S-501 EQUIPMENT PAD (EXTERIOR)

SCALE: NTS

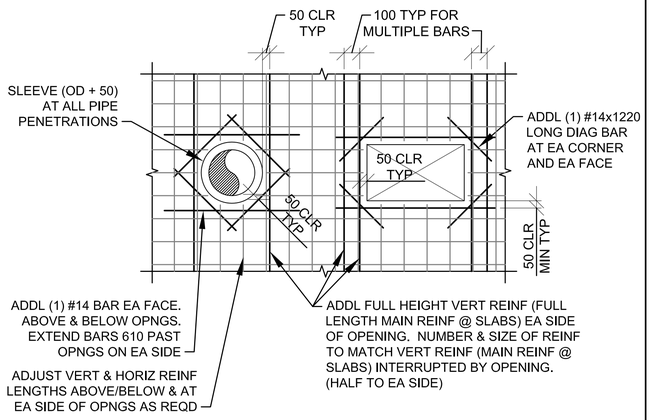

7 / S-501 OPENING THRU CONC WALL

SCALE: NTS

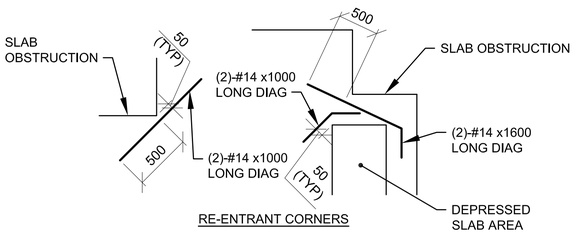

RE-ENTRANT CORNERS

DETAIL NOTES:
1. WHERE MORE THAN ONE ADDITIONAL BAR IS REQUIRED PARALLEL TO THE EXISTING SLAB/WALL REINFORCING THE ADDITIONAL REINFORCING BARS SHALL BE SPACED AT 100 ON CENTER.
2. ADDITIONAL REINFORCING PARALLEL TO THE SLAB/WALL REINFORCING SHALL BE #16 BARS THAT PROVIDE A STEEL AREA ON EACH SIDE OF THE OPENING EQUAL TO 1/2 THE AREA OF THE REINFORCING CUT BY THE OPENING.
3. FOR OPENINGS WITH SIDES OR DIAMETERS LESS THAN 300 SPREAD THE SLAB/WALL REINFORCING TO CLEAR THE OPENING.

8 / S-501 CONCRETE REINF DETAILS

SCALE: NTS

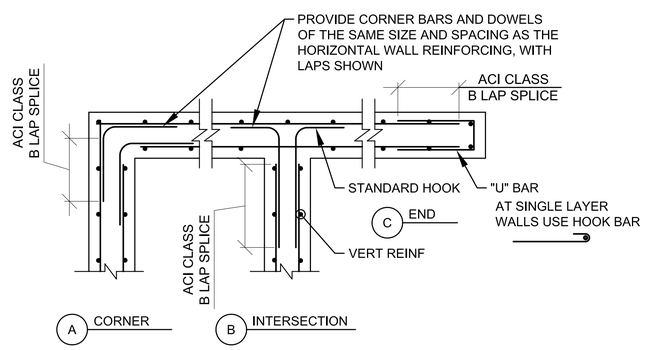

9 / S-501 CONCRETE WALL CORNER REINFORCING

SCALE: NTS

NOTE:
WALLS WITH SINGLE LAYER OF REINFORCING SIMILAR

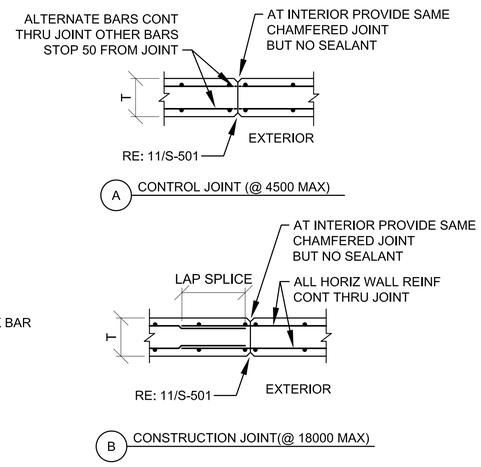

10 / S-501 CONCRETE WALL JOINTS

SCALE: NTS

NOTE:
WALLS WITH SINGLE LAYER OF REINFORCING SIMILAR

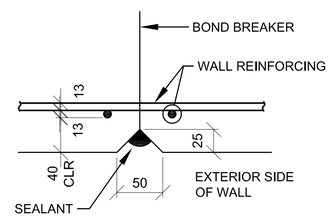

11 / S-501 TYP CONCRETE WALL JOINT FINISH DETAIL

SCALE: NTS

UNLESS OTHERWISE NOTED, LINEAR DIMENSIONS SHOWN ARE IN MILLIMETERS.

US ARMY CORPS OF ENGINEERS AFGHANISTAN NORTH DISTRICT

SYMBOL	DESCRIPTION	DATE	APPR.	SYMBOL	DESCRIPTION	DATE	APPR.

DESIGNED BY: JDM
DWN BY: RMS
REVIEWED BY: JH
SUBMITTED BY:
DATE: 3-24-2011
CONTRACT NO. W912ER-09-D-0002
DRAWING CODE:
CKD BY: EPS
FILE NAME: AD23-ADMIN-BLDG-ARCH-SPAN-S501.DWG
PLOT SCALE: NONE
PLOT DATE: 3/24/2011
REV: 0

BAKER

U.S. ARMY ENGINEER DISTRICT, AFGHANISTAN CORPS OF ENGINEERS APO AE 09356

SITE ADAPT DESIGN

AD23 - ADMIN BUILDING - ARCH SPAN

TYPICAL DETAILS

SHEET REFERENCE NUMBER:

S-501

3/24/2011 1:33 PM

A1 Size 594mm x 841mm

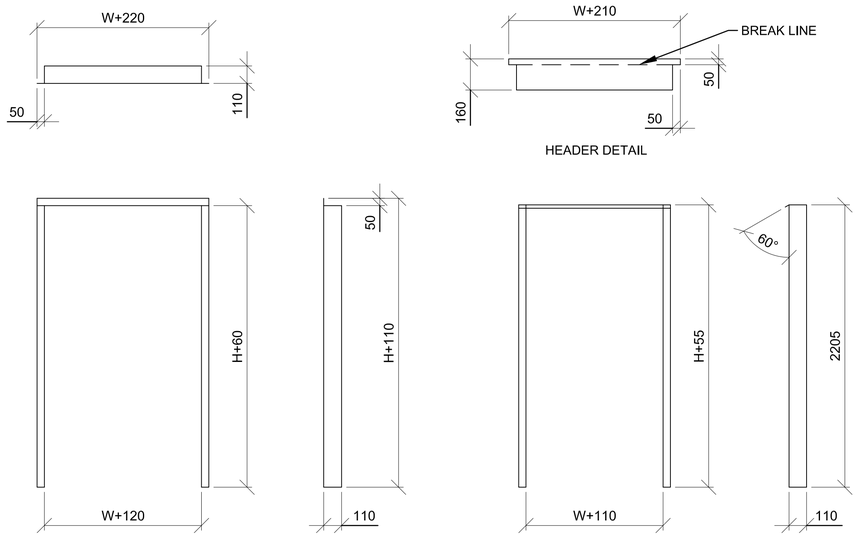

1 S-502 **120 DOOR DETAIL**

SCALE: NTS

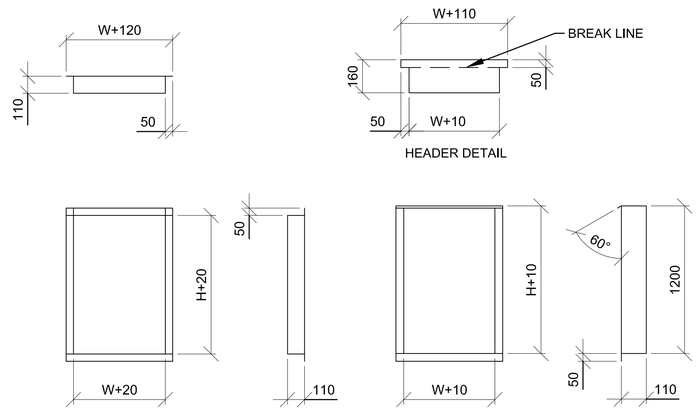

2 S-502 **120 WINDOW/MECH OPENING DETAIL**

SCALE: NTS

DOOR & WINDOW FRAME NOTES:

1. ALL DIMENSIONS ARE INSIDE DIMENSIONS.
2. WELD AND GRIND SMOOTH ALL CORNERS.
3. FRAME THICKNESS = 2.5mm.
4. ALL FRAMES, INTERIOR AND EXTERIOR, TO BE GALVANIZED.
5. RE: 1/A-601 FOR DOOR WIDTHS (W) AND HEIGHTS (H).
6. RE: 3/A-601 FOR WINDOW WIDTHS (W) AND HEIGHTS (H).
7. RE: SCHEDULE BELOW FOR LOUVER DIMENSIONS.
8. CUT OPENING DIMENSIONS:
   - WINDOW/LOUVER - W+130
   - DOOR - W+130
   - WINDOW/LOUVER - H+30
   - DOOR - H+65
9. RE: 3/S-502 FOR TYP JAMB DETAIL

MECH OPENING FRAME SCHEDULE

TYPE	W	H
M1	787	787
M2	1050	1350

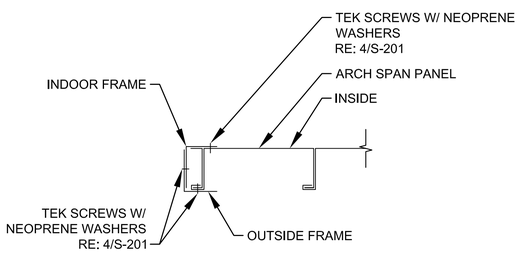

3 S-502 **TYP JAMB SECTION**

SCALE: NTS

UNLESS OTHERWISE NOTED, LINEAR DIMENSIONS SHOWN ARE IN MILLIMETERS.

COMMONWEALTH OF PENNSYLVANIA
REGISTERED PROFESSIONAL
JOSEPH D. MEIER
PE-036925E

US ARMY CORPS OF ENGINEERS
AFGHANISTAN NORTH DISTRICT

SYMBOL	DESCRIPTION	DATE	APPR.	SYMBOL	DESCRIPTION	DATE	APPR.

U.S. ARMY ENGINEER DISTRICT, AFGHANISTAN
CORPS OF ENGINEERS
APO AE 09356

DESIGNED BY: JDM
DWN BY: RMS
CKD BY: EPS
REVIEWED BY: JH
SUBMITTED BY:
DATE: 3-24-2011
CONTRACT NO. W912ER-09-D-0002
DRAWING CODE:
FILE NAME:
PLOT SCALE: NONE
PLOT DATE: 3/24/2011
REV: 0

BAKER

SITE ADAPT DESIGN

AD23 - ADMIN BUILDING - ARCH SPAN

DOOR/WINDOW/MECHANICAL OPENING FRAME DETAILS

SHEET REFERENCE NUMBER:

S-502

3/24/2011 1:33 PM

A1 Size 594mm x 841mm

CONCRETE REINFORCEMENT TENSION DEVELOPMENT/LAP SPLICE SCHEDULE

f'c = 28 MPa	LAP CLASS	UNCOATED BARS			
		TOP BARS		OTHER BARS	
METRIC BAR SIZES		CASE 1	CASE 2	CASE 1	CASE 2
#10 TO #20	A	50 BAR DIA	74 BAR DIA	38 BAR DIA	57 BAR DIA
	B	64 BAR DIA	96 BAR DIA	50 BAR DIA	74 BAR DIA
#25 TO #50	A	62 BAR DIA	93 BAR DIA	48 BAR DIA	71 BAR DIA
	B	80 BAR DIA	121 BAR DIA	62 BAR DIA	93 BAR DIA

NOTES:
1. TABULATED TENSION DEVELOPMENT LENGTH VALUES ARE TAKEN FROM CRSI DESIGN HANDBOOK 2008 10TH ED.
2. TENSION DEVELOPMENT & TENSION LAP SPLICE LENGTHS ARE EXPRESSED AS MULTIPLES OF BAR DIAMETERS.
3. TABULATED VALUES ARE BASED ON MINIMUM YIELD STRENGTH OF REINFORCEMENT, fy, OF 420MPa.
4. CONCRETE IS NORMAL WEIGHT (2400Kg/m^3) AND 28 DAY COMPRESSIVE STRENGTH = 28MPa.
5. TABULATED VALUES FOR BEAMS & COLUMNS ARE BASED ON TRANSVERSE REINFORCEMENT AND CONCRETE COVER MEETING MINIMUM CODE REQUIREMENTS.
6. CASES 1 & 2, WHICH DEPEND ON THE TYPE OF STRUCTURAL MEMBER, CONCRETE COVER, AND CENTER-TO-CENTER SPACING OF THE BARS ARE DEFINED IN THE TABLE BELOW.
7. LAP SPLICE LENGTHS (MINIMUM 300mm) ARE MULTIPLES OF TENSION DEVELOPMENT LENGTHS: CLASS A = 1.0(TENSION DEVELOPMENT LENGTH) & CLASS B = 1.3(TENSION DEVELOPMENT LENGTH)
8. TOP BARS ARE HORIZONTAL REINFORCEMENT WITH MORE THAN 300mm OF CONCRETE CAST BELOW THE BARS.
9. IT SHALL BE PERMISSIBLE TO CALCULATE WALL AND SLAB REINFORCEMENT TENSION DEVELOPMENT/SPLICE LENGTHS IN ACCORDANCE WITH ACI 12.2.3 OR TABLE 5.3(b) OF CRSI 2008 IN LIEU OF VALUES TABULATED ABOVE.

BEAMS, COLUMNS	CASE 1	CONCRETE COVER AT LEAST 1 BAR DIA AND CENTER-TO-CENTER SPACING AT LEAST 2 BAR DIA
	CASE 2	CONCRETE COVER LESS THAN 1 BAR DIA OR CENTER-TO-CENTER SPACING LESS THAN 2 BAR DIA
ALL OTHERS	CASE 1	CONCRETE COVER AT LEAST 1 BAR DIA AND CENTER-TO-CENTER SPACING AT LEAST 3 BAR DIA
	CASE 2	CONCRETE COVER LESS THAN 1 BAR DIA OR CENTER-TO-CENTER SPACING LESS THAN 3 BAR DIA

STANDARD HOOKS IN TENSION PER (ACI 318M-05) f'c = 28 MPa

METRIC BAR SIZE	HOOK DEVELOPMENT LENGTH (mm) ldh
#10	190
#12	229
#14	267
#16	305
#20	381
#25	476
#28	533
#32	610
#40	762
#50	953

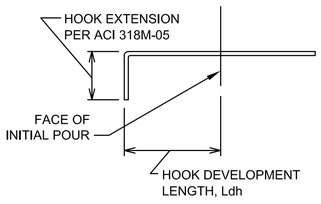

NOTES:
1. CONCRETE IS NORMAL WEIGHT CONCRETE.
2. BAR YIELD STRENGTH, fy = 420 MPa
3. SIDE COVER REQUIREMENTS OF ACI SECT. 12.5.3 ARE ASSUMED TO NOT BE MET.
4. TIE OR STIRRUP REQUIREMENTS OF ACI SECT. 12.5.3 ARE ASSUMED TO NOT BE MET.
5. REDUCTION FOR EXCESS REINFORCEMENT IS NOT TAKEN.
6. HOOK DEVELOPMENT LENGTH IS VALID FOR 180° HOOKS ALSO.

CONCRETE COVER SCHEDULE

MINIMUM CONCRETE COVER PROTECTION FOR REINFORCEMENT BARS SHALL BE AS LISTED BELOW: (SEE ACI 318M-05, SECTION 7.7 FOR CONDITIONS NOT NOTED). DIMENSIONS FOR BAR PLACEMENT GIVEN IN SECTIONS AND DETAILS SHALL SUPERSEDE MINIMUM COVER REQUIREMENTS GIVEN HERE. DIMENSIONS ARE IN mm. PROVIDE STANDARD BAR CHAIRS AND SUPPORT BARS @1200mm MAXIMUM AS REQUIRED TO MAINTAIN CONCRETE PROTECTION SPECIFIED.

FOOTINGS (EARTH FORMED):	70
COLUMNS / PIERS (TO TIES)	40
ELEVATED BEAMS & SLABS:	
BEAM TIES & STIRRUPS (NOT EXPOSED TO WEATHER)	40
BEAM TIES & STIRRUPS (EXPOSED TO WEATHER)	50
SLABS (NOT EXPOSED TO WEATHER)	20
SLABS (EXPOSED TO WEATHER)	
#19 & LARGER	50
#16 & SMALLER	40
SLABS ON GRADE	
NOT EXPOSED TO WEATHER (FROM TOP)	20
EXPOSED TO WEATHER (FROM TOP)	40
UTILITY TUNNEL WALLS, RETAINING WALLS AND SHEAR WALLS. (NO SURFACES SHALL BE EARTH FORMED)	
EARTH SIDE AND FRONT SIDE (EXPOSED TO WEATHER)	
#16 BAR AND SMALLER	40
#19 THRU #36 BAR	50

UNLESS OTHERWISE NOTED, LINEAR DIMENSIONS SHOWN ARE IN MILLIMETERS.

COMMONWEALTH OF PENNSYLVANIA REGISTERED PROFESSIONAL JOSEPH D. MEIER PE-036925E 14 Mar 11

US ARMY CORPS OF ENGINEERS AFGHANISTAN NORTH DISTRICT

SYMBOL	DESCRIPTION	DATE	APPR.	SYMBOL	DESCRIPTION	DATE	APPR.

DESIGNED BY: JDM
DWN BY: RMS
CKD BY: EPS
REVIEWED BY: JH
SUBMITTED BY:
DATE: 3/24/2011
CONTRACT NO. W912ER-09-D-0002
DRAWING CODE:
REV: 0
FILE NAME: AD23-ADMIN-BUILDING-ARCH-SPAN-SHEDULES.DWG
PLOT SCALE: NONE
PLOT DATE: 3/24/2011

BAKER

U.S. ARMY ENGINEER DISTRICT, AFGHANISTAN
CORPS OF ENGINEERS
APO AE 09356

SITE ADAPT DESIGN
AD23 - ADMIN BUILDING - ARCH SPAN
SCHEDULES

SHEET REFERENCE NUMBER:
S-601

3/24/2011 1:33 PM

A1 Size 594mm x 841mm

SCOPE RESPONSIBILITIES SCHEDULE

ITEM	FURNISHED BY	INSTALLED BY	FINAL CONNECTION BY
FREESTANDING FURNITURE	GOVT	GOVT	--
SYSTEMS FURNITURE	GOVT	GOVT	CONTR
OFFICE EQUIPMENT, PERMANENTLY INSTALLED	GOVT	GOVT	GOVT
WORKBENCHES	GOVT	GOVT	CONTR
METAL UTILITY STORAGE SHELVING	CONTR	CONTR	--
EQUIPMENT, PORTABLE	GOVT	GOVT	--
EQUIPMENT, PERMANENTLY INSTALLED	CONTR	CONTR	CONTR
EQUIPMENT RACKS IN IT ROOMS	CONTR	CONTR	--
FIRE EXTINGUISHERS AND CABINETS	CONTR	CONTR	--
TELEPHONE SWITCH AND HANDSETS	GOVT	GOVT	GOVT
SECURE TELEPHONE INSTRUMENTS (STEs)	GOVT	GOVT	GOVT

ABBREVIATIONS

ACP	ACOUSTIC CEILING PANEL
AFF	ABOVE FINISH FLOOR
ALUM	ALUMINUM
AUTO	AUTOMATIC
ABV	ABOVE
AT/FP	ANTI-TERRORISM FORCE PROTECTION
BC	BOTTOM OF CURB
B.O.	BOTTOM OF
BLK	BLOCK
BRG	BEARING
BLKG	BLOCKING
BD	BOARD
BLDG	BUILDING
CLG	CEILING
CONC	CONCRETE
CONT	CONTINUOUS
CONTR	CONTRACTOR
CMU	CONCRETE MASONRY UNIT
CT	CERAMIC TILE
C.J.	CONTROL JOINT
CRS	COURSE
DIAM	DIAMETER
DN	DOWN
DTL	DETAIL
DWG	DRAWING
EA	EACH
EIFS	EXTERIOR INSULATION AND FINISH SYSTEM
EWC	ELECTRIC WATER COOLER
EXP	EXPANSION
EXT	EXTERIOR
EQUIP	EQUIPMENT
ELEC	ELECTRIC
EL	ELEVATION
EMER	EMERGENCY
EQ	EQUAL
F/	FACE OF
FE	FIRE EXTINGUISHER
FEC	FIRE EXTINGUISHER CABINET
FIBERBD	FIBER BOARD
FL	FLOOR
FD	FLOOR DRAIN
FTG	FOOTING
GA	GAUGE
GALV	GALVANIZED
GC	GENERAL CONTRACTOR
GL	GLASS
GOVT	GOVERNMENT
GYP	GYPSUM
GWB	GYPSUM WALLBOARD
HT	HEIGHT
HC	HANDICAPPED
HDW	HARDWARE
HTG	HEATING
HVAC	HEATING/VENTILATING/ AIR CONDITIONING
HM	HOLLOW METAL
INSUL	INSULATION
INT	INTERIOR
JT	JOINT
JAN	JANITOR
LAM	LAMINATE
LAV	LAVATORY
LH	LEFT HAND
LT	LIGHT
LVR	LOUVER
MAS	MASONRY
MAX	MAXIMUM
MECH	MECHANICAL
MFR	MANUFACTURER
MIN	MINIMUM
MIR	MIRROR
MISC	MISCELLANEOUS
MO	MASONRY OPENING
MR	MOISTURE RESISTANT
MS	METAL STUD
MTL	METAL
NA	NOT APPLICABLE
NO	NUMBER
NOM	NOMINAL
NTS	NOT TO SCALE
NIC	NOT IN CONTRACT
OPG	OPENING
OC	ON CENTER
OH	OVERHEAD
OPP	OPPOSITE
PL	PLATE
PLAM	PLASTIC LAMINATE
PLYWD	PLYWOOD
PNL	PANEL
PREF	PREFABRICATED
PERF	PERFORATED
PR	PAIR
PT	PAINT
QT	QUARRY TILE
R	RISER
RAD	RADIUS
RD	ROOF DRAIN
REF	REFERENCE
REINF	REINFORCED
RH	RIGHT HAND
ROW	RIGHT OF WAY
RM	ROOM
RO	ROUGH OPENING
RWC	RAINWATER CONDUCTOR
SIM	SIMILAR
STL	STEEL
STR	STRUCTURE
ST0	STORAGE
SPEC	SPECIFICATION
SS	STAINLESS STEEL
STN	STAIN
STD	STANDARD
SUSP	SUSPENDED
TC	TOP OF CURB
TH	THICK
TYP	TYPICAL
TR	TREAD
T.O.	TOP OF
TELE	TELEPHONE
TEMP	TEMPERED/TEMPORARY
UNF	UNFINISHED
UNO	UNLESS NOTED OTHERWISE
USAR	UNITED STATES ARMY RESERVE
VERT	VERTICAL
VIF	VERIFY IN FIELD
VTR	VENT THROUGH ROOF
WD	WOOD
WH	WATER HEATER
WWF	WELDED WIRE FABRIC
W/O	WITHOUT

PROJECT NOTES

STANDARDS AND REGULATIONS:

1) CONTRACTOR SHALL PERFORM ALL WORK IN CONFORMANCE WITH APPLICABLE BUILDING CODES, REGULATIONS, ORDINANCES, UTILITY PROVIDER REQUIREMENTS, AND SIMILAR STANDARDS.

2) CONTRACTOR SHALL OBTAIN ALL REQUIRED INSPECTIONS OF THE WORK. CONTRACTOR SHALL REGULARLY UPDATE OWNER AND ARCHITECT REGARDING THE STATUS OF INSPECTIONS.

3) CONTRACTOR SHALL COORDINATE WORK WITH APPLICABLE UTILITY PROVIDERS.

4) CONTRACTOR SHALL BE FAMILIAR WITH REQUIREMENTS AND CONSTRUCTION SHALL BE IN COMPLIANCE WITH REFERENCED FIRE-RATED ASSEMBLY TESTS AND STANDARDS.

ADMINISTRATION OF THE WORK:

1) CONTRACTOR SHALL BE SOLELY RESPONSIBLE FOR THE MEANS, METHODS, AND SEQUENCES OF CONSTRUCTION AND DIMENSIONS.

2) CONTRACTOR SHALL BE SOLELY RESPONSIBLE FOR THE SAFETY OF ALL CONSTRUCTION PERSONNEL AND AUTHORIZED VISITORS AT THE SITE.

3) CONTRACTOR SHALL BECOME FULLY ACQUAINTED WITH CONDITIONS RELATED TO THE WORK. ANY KNOWN DISCREPANCIES BETWEEN THE DOCUMENTS AND THE ACTUAL CONDITIONS SHALL BE REPORTED TO THE OWNER FOR RESOLUTION PRIOR TO PROCEEDING WITH WORK RELATED TO THE DISCREPANCY.

4) CONTRACTOR SHALL REMOVE AND PROPERLY DISPOSE OF ALL CONSTRUCTION AND DEMOLITION DEBRIS. CONTRACTOR SHALL OBTAIN APPROVAL OF OWNER FOR DETAILS RELATING TO THE REMOVAL OF TRASH, INCLUDING SUCH ISSUES AS PATH OF TRAVEL, USE OF STAIRS AND ELEVATORS, REMOVAL OF WINDOWS, LOCATION OF CHUTES AND DUMPSTERS, ETC., PRIOR TO REMOVAL OF DEBRIS. CONTRACTOR SHALL CLEAN AND REPAIR ANY DAMAGES TO EXISTING ITEMS SOILED OR DAMAGED BY THE DEBRIS REMOVAL PROCESS. IF CLEANING AND/OR REPAIR DOES NOT RETURN ITEMS TO ORIGINAL CONDITION CONTRACTOR SHALL INSTALL NEW ITEMS.

5) CONTRACTOR SHALL BECOME FAMILIAR WITH AND COMPLY WITH OWNER'S PROCEDURES FOR MAINTAINING A SECURE SITE AND BUILDING.

6) EACH INSTALLER SHALL EXAMINE ALL SUBSTRATE CONDITIONS AND/OR SITE CONDITIONS WHICH AFFECT THE QUALITY OF EACH PRODUCT TO BE INSTALLED. IF ANY CONDITIONS EXIST WHICH WILL HAVE A DETRIMENTAL EFFECT ON THE QUALITY OF THE INSTALLATION, THE INSTALLER SHALL IMMEDIATELY NOTIFY THE CONTRACTOR. INSTALLATION SHALL NOT PROCEED UNTIL THE UNSATISFACTORY CONDITIONS ARE CORRECTED. INSTALLATION SHALL SIGNIFY ACCEPTANCE OF THE CONDITIONS.

7) CONTRACTOR SHALL MAINTAIN RECORD DRAWINGS ON THE SITE AT ALL TIMES.

8) CONTRACTOR SHALL BE RESPONSIBLE FOR ENSURING COORDINATION EFFORTS OF ALL SUBCONTRACTORS.

9) CONTRACTOR SHALL LAY OUT ALL WORK AS SOON AS POSSIBLE. ANY DISCREPANCIES SHALL BE REPORTED TO THE OWNER FOR RESOLUTION PRIOR TO PROCEEDING WITH THE WORK IN QUESTION.

10) DO NOT ATTACH OR HANG ANY ITEMS DIRECTLY FROM ARCH-SPAN PANELS. ATTACH ONLY TO BUILDING TABS LOCATED WITHIN PANEL JOINTS

11) CONTRACTOR TO PROVIDE ALL NECESSARY BLOCKING TO SUPPORT WALL & CEILING MOUNTED EQUIPMENT, FIXTURES AND ACCESSORIES.

USE OF CONSTRUCTION DOCUMENTS:

1) DO NOT SCALE DRAWINGS. ONLY WRITTEN DIMENSIONS OR KEYED NOTES SHALL BE USED. CONTACT ARCHITECT IF CLARIFICATION OR ADDITIONAL INFORMATION IS REQUIRED.

2) THE DRAWINGS ARE SCHEMATIC IN NATURE. MODIFICATIONS IN DUCTS, PIPING, CONDUIT AND WIRING MAY BE REQUIRED TO ACCOMMODATE ACTUAL FIELD CONDITIONS.

3) DRAWINGS SHALL NOT BE REPRODUCED FOR SUBMITTALS.

4) DIMENSIONS ARE AS FOLLOWS UNLESS NOTED OTHERWISE:
   A) TO CENTER LINE OF INTERIOR PARTITIONS
   B) TO CENTERLINE OF COLUMNS.
   C) TO TOP OF FLOOR SLAB.
   D) TO BOTTOM OF FINISHED CEILING.
   E) TO EXTERIOR FACE OF ARCH SPAN PANEL OR TO FACE OF MASONRY OR CONCRETE.

5) VERIFY IN FIELD DIMENSIONS OF ALL DOOR, WINDOW AND LOUVER OPENINGS.

DEFINITIONS:

1) "ALIGN" AS USED IN THESE DOCUMENTS SHALL MEAN TO ACCURATELY LOCATE FINISH FACES IN THE SAME PLANE AND/OR TO INSTALL NEW CONSTRUCTION ADJACENT TO EXISTING CONSTRUCTION WITHOUT ANY VISIBLE JOINTS OR SURFACE IRREGULARITIES.

2) "CLEAR" AS USED IN THESE DOCUMENTS SHALL MEAN THAT THE CONDITION IS NOT ADJUSTABLE WITHOUT APPROVAL OF THE ARCHITECT. CLEAR DIMENSIONS ARE TYPICALLY TO FINISH FACE.

3) "MAXIMUM" OR "MAX" AS USED IN THESE DOCUMENTS SHALL MEAN THAT THE CONDITION IS SLIGHTLY ADJUSTABLE BUT MAY NOT VARY TO A DIMENSION OR QUANTITY GREATER THAN THAT SHOWN WITHOUT APPROVAL OF THE ARCHITECT.

4) "MINIMUM" OR "MIN" AS USED IN THESE DOCUMENTS SHALL MEAN THAT THE CONDITION IS SLIGHTLY ADJUSTABLE BUT MAY NOT VARY TO A DIMENSION OR QUANTITY LESS THAN THAT SHOWN WITHOUT APPROVAL OF THE ARCHITECT.

5) "TYPICAL" AS USED IN THESE DOCUMENTS SHALL MEAN THAT THE CONDITION OR DIMENSION IS THE SAME OR REPRESENTATIVE FOR SIMILAR CONDITIONS THROUGHOUT.

6) "*" AS USED IN THESE DOCUMENTS SHALL MEAN THAT THE DIMENSION OR QUALITY IS SLIGHTLY ADJUSTABLE TO ACCOMMODATE ACTUAL CONDITIONS. FIELD VERIFICATION AND COORDINATION WITH OTHER ELEMENTS MIGHT BE NECESSARY.

SYMBOLS LEGEND

ROOM NAME XXXX — ROOM NAME / ROOM NUMBER

X — PARTITION TYPE

150 UNO — DOOR NUMBER; PROVIDE 150 HINGE SIDE WALL RETURN ON DOORS, U.N.O. OR CENTER IN WALL

1 / A-101 — SECTION CALL-OUT

1 / A-101 — DETAIL CALL-OUT

A / B / C / D — 1 / A-101 — INTERIOR ELEVATION CALL-OUT

XX — KEYNOTE

X — WINDOW TYPE

1 / A-101 — ELEVATION CALL-OUT

/ A-### — DETAIL REFERENCE NUMBER; SHEET NUMBER DETAIL IS DRAWN ON

ELEVATION MARK

METAL STUD AND GWB PARTITION

CONCRETE

BRICK

CONCRETE BLOCK

FIBERGLASS BATT INSULATION

RIGID BOARD INSULATION

CONCRETE OR GROUT (DRAWN IN SECTION)

CONCRETE PAVING (DRAWN IN PLAN)

UNLESS OTHERWISE NOTED, LINEAR DIMENSIONS SHOWN ARE IN MILLIMETERS.

COMMONWEALTH OF VIRGINIA — PETER GARRETT SCHMIDT — No. 013167 — ARCHITECT

US ARMY CORPS OF ENGINEERS AFGHANISTAN NORTH DISTRICT

SYMBOL	DESCRIPTION	DATE	APPR.	SYMBOL	DESCRIPTION	DATE	APPR.

DESIGNED BY: PGS, SE, MR
DWN BY: SE, MDH, AH
CKD BY: PGS, SE, MR
REVIEWED BY:
SUBMITTED BY:
DATE: 3/24/2011
CONTRACT NO. W912ER-09-D-0002
DRAWING CODE:
FILE NAME: ARCHITECTURAL/ABBREVIATIONS.DWG
PLOT SCALE: NONE
PLOT DATE: 3/24/2011
REV: 0

U.S. ARMY ENGINEER DISTRICT, AFGHANISTAN
CORPS OF ENGINEERS
APO AE 09356

BAKER

SITE ADAPT DESIGN
AD23 - ADMIN BUILDING - ARCH SPAN
ABBREVIATIONS, SYMBOLS, AND GENERAL NOTES

SHEET REFERENCE NUMBER:
A-001

3/24/2011 1:33 PM

A1 Size 594mm x 841mm

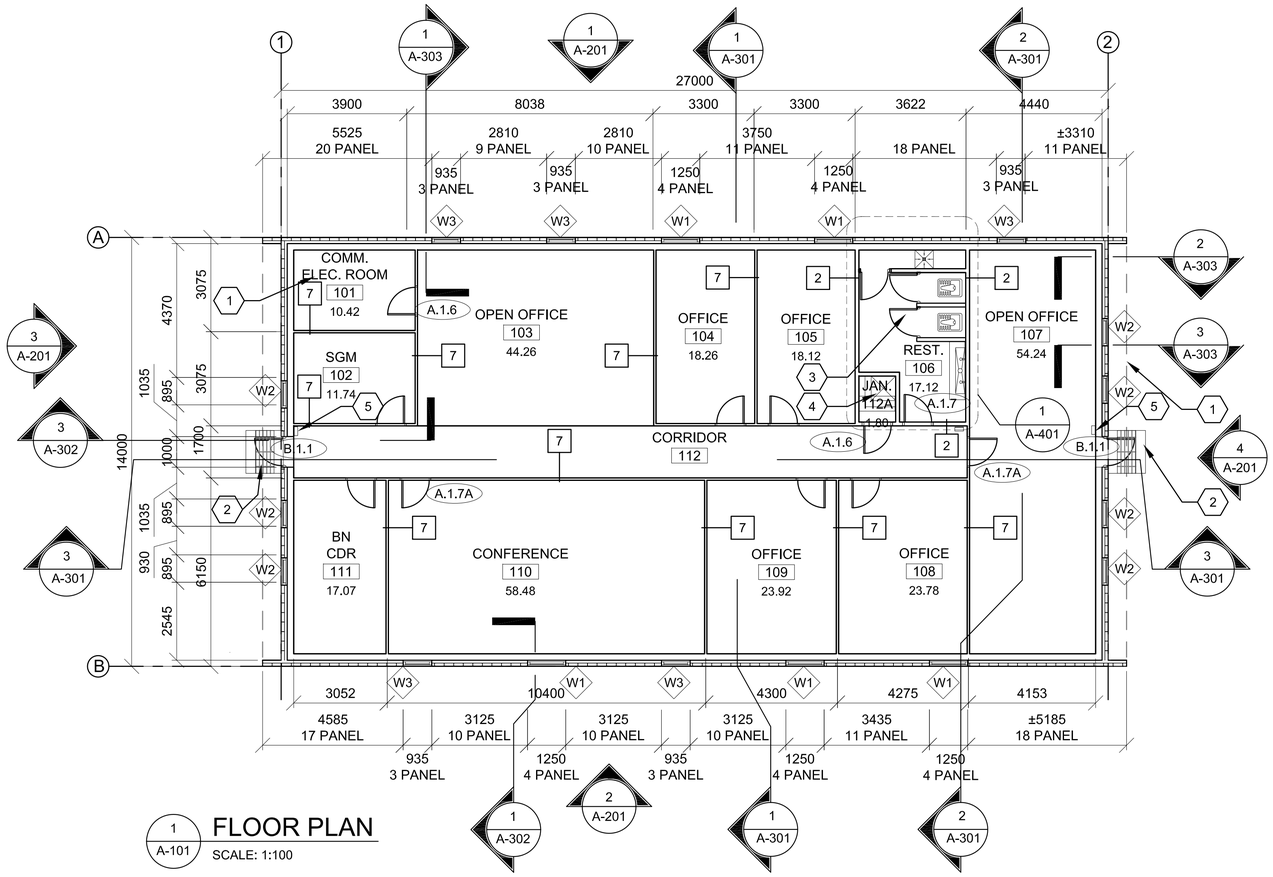

1 A-101 **FLOOR PLAN**
SCALE: 1:100

GENERAL NOTES:

A. DIMENSIONS ARE SHOWN TO OUTER EDGE OF EXTERIOR STRUCTURAL FACE OF ARCH SPAN PANEL(GRID LINES), CENTER LINE OF INTERIOR PARTITIONS, EDGE OF WINDOW OPENINGS, AND TO HINGE SIDE OF DOOR FRAME OPENING, UNLESS NOTED OTHERWISE.

B. HINGE SIDE OF OPENINGS FOR DOORS AND FRAMES SHALL BE LOCATED 200 MM FROM THE ADJACENT WALL OR COLUMN, UNLESS NOTED OTHERWISE.

C. INTERIOR PARTITIONS SHALL BE PARTITION TYPE 1, UNLESS NOTED OTHERWISE. REFER TO A-602 FOR PARTITION TYPES SCHEDULE

D. COSMETIC REPAIR OF MINOR DEFECTS: REPAIR OR FILL MORTAR JOINTS AND MINOR DEFECTS, INCLUDING BUT NOT LIMITED TO SPALLS, IN ACCORDANCE WITH MANUFACTURER'S RECOMMENDATIONS AND PRIOR TO COATING APPLICATION. SURFACES TO BE PAINTED SHALL BE CLEAN AND FREE OF FOREIGN MATTER BEFORE APPLICATION OF PAINT. CLEANING SHALL BE SCHEDULED SO THAT DUST AND OTHER CONTAMINANTS WILL NOT FALL ON NEWLY PAINTED SURFACES.

E. CONCRETE, PLASTER AND MASONRY SURFACES SHALL BE ALLOWED TO CURE FOR AT LEAST 30 DAYS BEFORE PAINTING. CONCRETE SLABS-ON-GRADE SHALL BE ALLOWED TO CURE 90 DAYS BEFORE STAINING OR SEALING.

F. DO NOT USE PAINT MATERIALS CONTAINING LEAD CONTENT IN EXCESS OF 0.009 PERCENT OF THE WEIGHT OF THE TOTAL NONVOLATILE CONTENT OF THE PAINT OR THE WEIGHT OF THE DRIED PAINT FILM.

G. DO NOT USE ANY ASBESTOS CONTAINING MATERIALS (ACM) IN PROJECT. ACM IS DEFINED AS 1% OR MORE BY VOLUME.

H. DO NOT USE PAINT MATERIALS CONTAINING MERCURIAL FUNGICIDES.

I. FACTORY PRIMED METAL DOORS AND FRAMES SHALL RECEIVE TWO COATS OF PAINT.

J. FILL REMAINING SPACE AT PENETRATIONS IN FIRE-RATED FLOORS, PARTITIONS AND CEILINGS WITH APPROPRIATE FIRESTOPPING MATERIALS.

K. ALL CEILING FINISHES SHALL AS NOTED ON REFLECTED CEILING PLANS OR FINISH SCHEDULE.

L. ALL WALL FINISHES SHALL AS NOTED ON FINISH SCHEDULE. REFER TO A-603

M. ALL FLOOR FINISHES SHALL BE SEALED CONCRETE, UNLESS NOTED OTHERWISE.

N. PROVIDE TILE FINISHES AS INDICATED IN DETAILS & KEY NOTES.

O. ALL DOOR, FRAME AND HARDWARE TYPES SHALL BE A.1.5A UNLESS NOTED OTHERWISE. REFER TO A-601 FOR DOOR INFORMATION.

P. TOILET STALL DOORS SHALL BE G.2.12

Q. SHOWER STALL DOOR, FRAME AND HARDWARE TYPE SHALL BE E.1.12.

R. PROVIDE POLISHED STAINLESS STEEL MIRROR 600 X 900 ABOVE EVERY LAVATORY FAUCET.

S. PLASTER MAY BE SUBSTITUTED FOR DRYWALL WALLS AND CEILINGS. MAINTAIN FIRE RATINGS AS NOTED

T. LOCATION OF EXTERIOR DOORS AND WINDOWS MUST BE COORDINATED WITH ARCH SPAN MODULE. PLAN DIMENSIONS OF THESE IS APPROXIMATE AND MAY BE SLIGHTLY ADJUSTED TO SUIT PANEL FABRICATION TOLERANCES.

KEY NOTES:

1. LINE OF ROOF OVERHANG ABOVE.
2. CONCRETE STOOP WITH GRATE - SEE DETAIL 1/A-503.
3. FLOOR DRAIN - SEE PLUMBING AND DETAIL 2/A-505
4. REFER TO 1/A505 FOR MOP SINK
5. FIRE EXTINGUISHER

N

0 2000 4000
SCALE: 1:100

UNLESS OTHERWISE NOTED, LINEAR DIMENSIONS SHOWN ARE IN MILLIMETERS.

COMMONWEALTH OF VIRGINIA
PETER GARRETT SCHMIDT
No. 013167
ARCHITECT

US ARMY CORPS OF ENGINEERS
AFGHANISTAN NORTH DISTRICT

SYMBOL	DESCRIPTION	DATE	APPR.	SYMBOL	DESCRIPTION	DATE	APPR.

DESIGNED BY: PGS, SE, MR
DWN BY: SE, MDH, AH
CKD BY: PGS, SE, MR
REVIEWED BY:
SUBMITTED BY:
DATE: 3/24/2011
CONTRACT NO. W912ER-09-D-0002
DRAWING CODE:
FILE NAME: 4BCORPNAS\NAS\NAS-A-101.DWG
PLOT SCALE: 1:100
PLOT DATE: 3/24/2011
REV: 0

BAKER

U.S. ARMY ENGINEER DISTRICT, AFGHANISTAN
CORPS OF ENGINEERS
APO AE 09356

SITE ADAPT DESIGN
AD23 - ADMIN BUILDING - ARCH SPAN
FLOOR PLAN

SHEET REFERENCE NUMBER:
A-101

A1 Size 594mm x 841mm

3/24/2011 5:13 PM

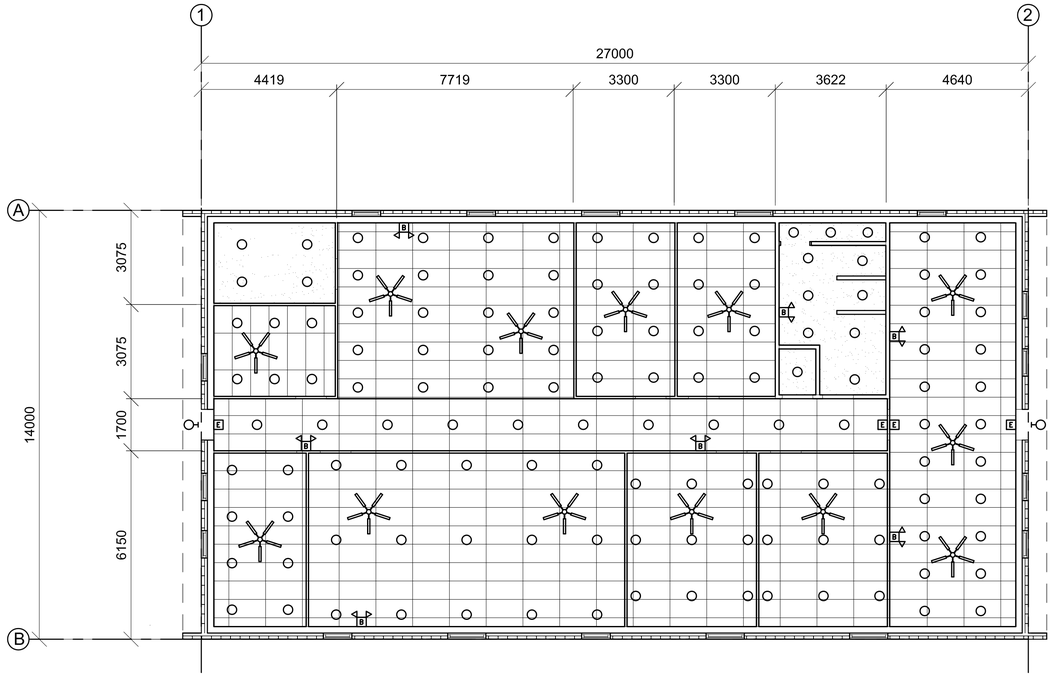

1 / A-102 REFLECTED CEILING PLAN

SCALE: 1:100

CEILING LEGEND:

- 600mm X 1200mm METAL PANEL SUSPENDED CEILING SYSTEM
- NO FINISHED CEILING, EXPOSED STRUCTURE (SEE FINISH SCHEDULE)
- GYPSUM WALLBOARD CEILING (SEE FINISH SCHEDULE)
- 300mm X 1200mm FLUORESCENT LIGHT FIXTURE
- 600mm X 1200mm FLUORESCENT LIGHT FIXTURE
- 300mm X 1200mm FLUORESCENT LIGHT FIXTURE NORMAL/EMERGENCY
- 600mm X 1200mm FLUORESCENT LIGHT FIXTURE NORMAL/EMERGENCY
- SUSPENDED LIGHT FIXTURE
- WALL MOUNTED LIGHT FIXTURE
- DOWNLIGHT
- EXIT SIGN
- SMOKE DETECTOR
- BATTERY PACK
- RELIEF RETURN DIFFUSER
- SUPPLY DIFFUSER
- EXHAUST DIFFUSER
- ACCESS PANEL
- CEILING FAN

GENERAL NOTES:

A. CEILING SHALL BE 2.65M A.F.F. UNLESS NOTED OTHERWISE OR EXPOSED STRUCTURE.
B. REFER TO SHEET A-603 FOR FINISH SCHEDULE
C. DRYWALL CEILING TYPICALLY WALL BEAR ON ADJACENT PARTITIONS. SPAN CRITERIA & ALTERNATIVE SUPPORTING METHODS ARE DEFINED ON STRUCTURAL NOTES RE: COLD-FORMED METAL FRAMING ON DWG. S-002.
D. LOCATION OF LIGHT FIXTURES AND FANS AS INDICATED ON THIS REFLECTED CEILING PLAN TAKES PRECEDENCE OVER ALL RELATIVE POSITIONS AS SHOWN ON ELECTRIC AND MECHANICAL DRAWINGS. U.N.O. INSTALL FIXTURES WITH EQUAL SPACING BETWEEN EACH OTHER TO THE GREATEST EXTENT POSSIBLE AND AS GRAPHICALLY SHOWN IN THIS LAYOUT. SEE ELECTRICAL DRAWINGS FOR SUPPORT AND WIRING INFORMATION. IN AREA WHERE SUSPENDED CEILING SUPPORTS OVERLAP LIGHTING LOCATIONS SHIFT LIGHTING 25MM OFF OF GRID TO RESOLVE CONFLICT.

KEY NOTES:

1. NOT USED

0 2000 4000
SCALE: 1:100

UNLESS OTHERWISE NOTED, LINEAR DIMENSIONS SHOWN ARE IN MILLIMETERS.

COMMONWEALTH OF VIRGINIA
PETER GARRETT SCHMIDT
No. 013167
ARCHITECT

US ARMY CORPS OF ENGINEERS
AFGHANISTAN NORTH DISTRICT

SYMBOL	DESCRIPTION	DATE	APPR.	SYMBOL	DESCRIPTION	DATE	APPR.

DESIGNED BY: PGS, SE, MR
DWN BY: SE, MDH, AH
CKD BY: PGS, SE, MR
REVIEWED BY:
SUBMITTED BY:
DATE: 4-25-2011
REV: 0
CONTRACT NO. W912ER-09-D-0002
DRAWING CODE:
FILE NAME: AFGHANISTAN-NORTH-AD23-A-102.DWG
PLOT SCALE: 1:100
PLOT DATE: 4/25/2011

BAKER

U.S. ARMY ENGINEER DISTRICT, AFGHANISTAN
CORPS OF ENGINEERS
APO AE 09356

SITE ADAPT DESIGN
AD23 - ADMIN BUILDING - ARCH SPAN
REFLECTED CEILING PLAN

SHEET REFERENCE NUMBER:
A-102

A1 Size 594mm x 841mm

4/25/2011 2:28 PM

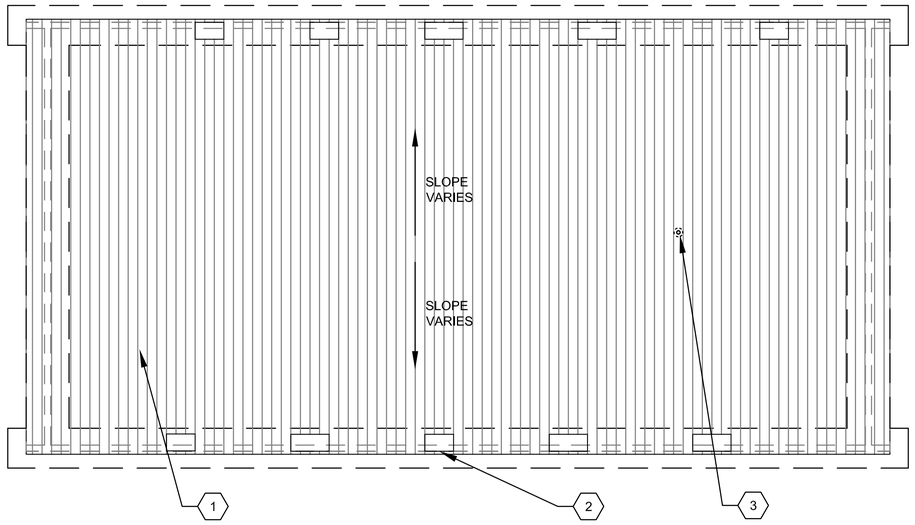

1
A-103
ROOF PLAN
SCALE: 1:100

GENERAL NOTES:

A. THE APPROXIMATE LOCATION OF ROOF DEVICES AND PENETRATIONS ARE SHOWN ON THE ROOF PLAN FOR INFORMATION ONLY. THE CONTRACTOR SHALL BE RESPONSIBLE FOR UNDERSTANDING THE ACTUAL LOCATION OF THESE AND ALL OTHER ITEMS PRIOR TO BEGINNING CONSTRUCTION. COORDINATE ALL ROOF PENETRATIONS WITH STRUCTURAL, MECHANICAL AND PLUMBING WORK.

B. PLUMBING VENT PENETRATIONS SHALL TERMINATE 300 MM MINIMUM ABOVE THE ROOF.

C. UNLESS OTHERWISE NOTED, NOTES, DETAILS OR FEATURES INDICATED FOR ONE CONDITION SHALL BE APPLICABLE FOR ALL ALIKE AND SIMILAR CONDITIONS.

D. STOCKPILING OF MATERIALS, EQUIPMENT AND ANY OTHER ITEMS ON THE ROOF IS PROHIBITED.

E. ROOFS SHALL BE PRE-FINISHED METAL ARCH SPAN.

KEY NOTES:

1. PRE-FINISHED METAL ARCH SPAN CONSTRUCTION
2. DOOR OR WINDOW DORMER
3. VTR SEE PLUMBING

0 2000 4000
SCALE: 1:100

UNLESS OTHERWISE NOTED,
LINEAR DIMENSIONS
SHOWN ARE IN MILLIMETERS.

COMMONWEALTH OF VIRGINIA
PETER GARRETT SCHMIDT
No. 013167
ARCHITECT

US ARMY CORPS
OF ENGINEERS
AFGHANISTAN NORTH
DISTRICT

SYMBOL	DESCRIPTION	DATE	APPR.	SYMBOL	DESCRIPTION	DATE	APPR.

U.S. ARMY ENGINEER DISTRICT, AFGHANISTAN
CORPS OF ENGINEERS
APO AE 09356

DESIGNED BY: PGS, SE, MR
DWN BY: SE, MDH, AH
CKD BY: PGS, SE, MR
REVIEWED BY:
SUBMITTED BY:
BAKER

DATE: 3-24-2011
CONTRACT NO. W912ER-09-D-0002
DRAWING CODE:
FILE NAME: AF0207R0A0A0-A-103.DWG
PLOT SCALE: 1:100
PLOT DATE: 3/24/2011
REV: 0

SITE ADAPT DESIGN
AD23 - ADMIN BUILDING - ARCH SPAN
ROOF PLAN

SHEET REFERENCE NUMBER:
A-103

3/24/2011 1:33 PM

A1 Size 594mm x 841mm

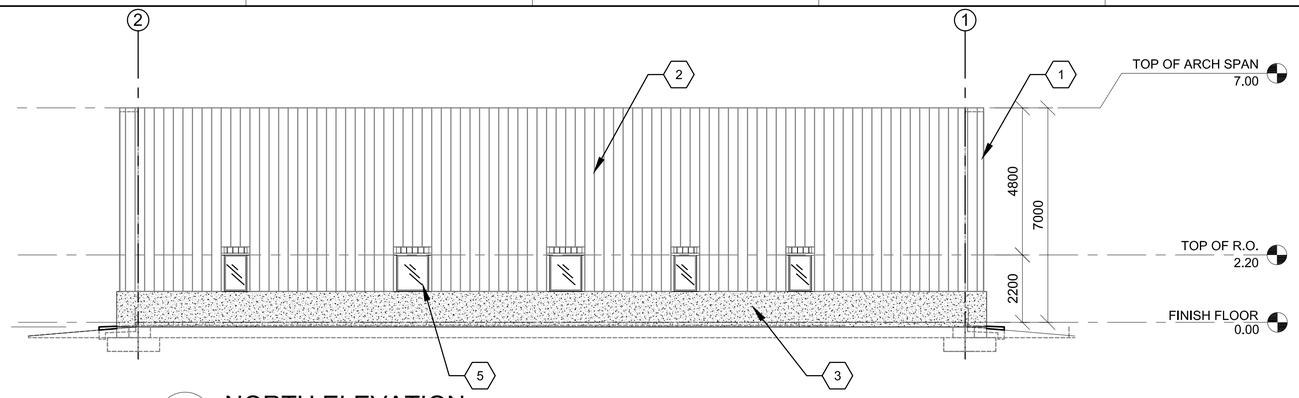

1 A-201 NORTH ELEVATION
SCALE: 1:100

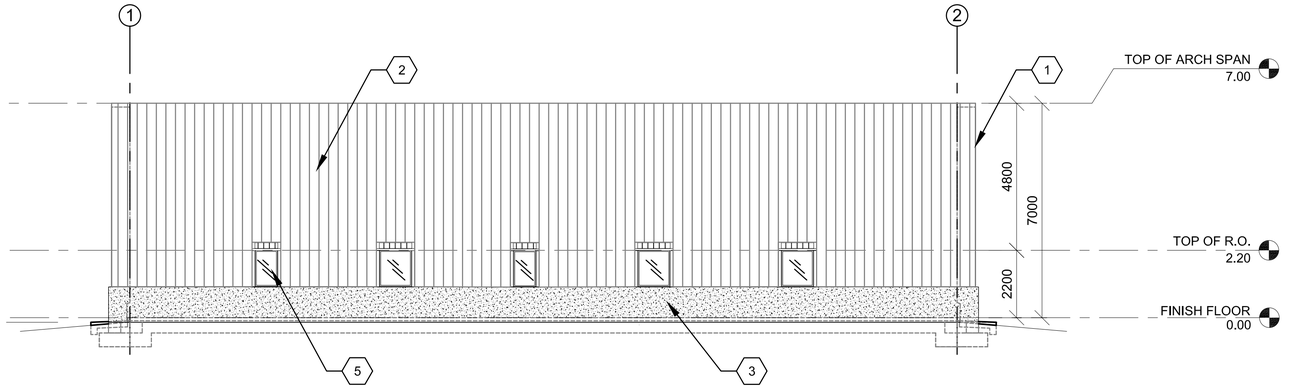

2 A-201 SOUTH ELEVATION
SCALE: 1:100

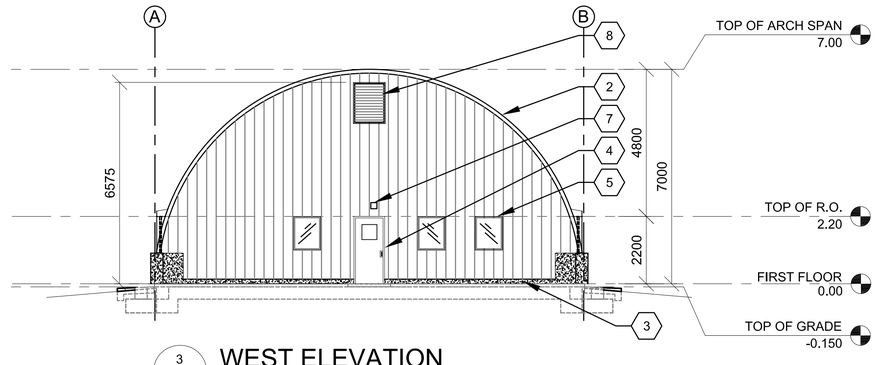

3 A-201 WEST ELEVATION
SCALE: 1:100

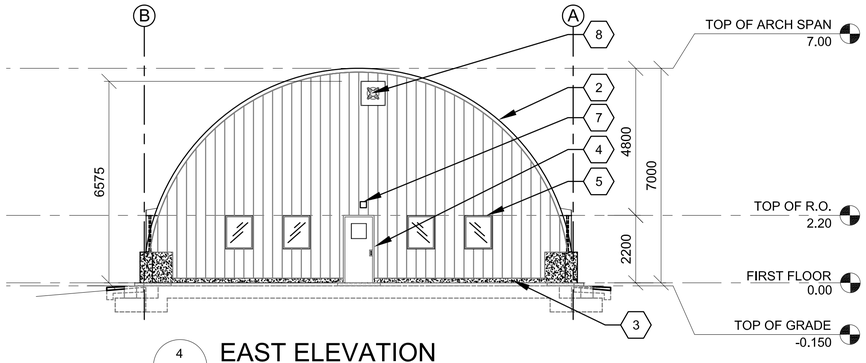

4 A-201 EAST ELEVATION
SCALE: 1:100

GENERAL NOTES:

A. FACTORY PRIMED METAL DOORS AND FRAMES SHALL RECEIVE TWO COATS OF PAINT.
B. LOCATION OF EXTERIOR DOORS AND WINDOWS MUST BE COORDINATED WITH ARCH SPAN MODULE. PLAN DIMENSIONS OF THESE IS APPROXIMATE AND MAY BE SLIGHTLY ADJUSTED TO SUIT PANEL FABRICATION TOLERANCES.
C. EXTERIOR CONCRETE BUILDING SURFACES TO RECEIVE PENETRATING CONCRETE SEALER
D. COORDINATE ALL HVAC OPENING SIZES AND LOCATIONS WITH HVAC CONTRACTOR PRIOR TO INSTALLATION.

KEY NOTES:

1. EXTENSION OF ARCH SPAN
2. PRE-FINISHED METAL ARCH SPAN CONSTRUCTION WALL AND CEILING.
3. CONCRETE WALL.
4. PAINTED HOLLOW METAL DOOR & FRAME.
5. STEEL WINDOW PAINTED.
6. PRE-FINISHED STEEL LOUVER - SEE DETAIL 3/A501
7. LIGHTING - SEE ELECTRICAL
8. ATTIC VENTILATION LOUVER OR FAN SEE MECHANICAL FOR SIZE AND TYPE

0 2000 4000
SCALE: 1:100

UNLESS OTHERWISE NOTED, LINEAR DIMENSIONS SHOWN ARE IN MILLIMETERS.

COMMONWEALTH OF VIRGINIA
PETER GARRETT SCHMIDT
No. 013167
ARCHITECT

US ARMY CORPS OF ENGINEERS
AFGHANISTAN NORTH DISTRICT

SYMBOL	DESCRIPTION	DATE	APPR.	SYMBOL	DESCRIPTION	DATE	APPR.

DESIGNED BY: PGS, SE, MR
DWN BY: SE, MDH, AH
CKD BY: PGS, SE, MR
REVIEWED BY:
SUBMITTED BY:
DATE: 3-24-2011
CONTRACT NO. W912ER-09-D-0002
DRAWING CODE:
REV: 0
FILE NAME: ARCHITECTURAL\A-201.DWG
PLOT SCALE: 1:100
PLOT DATE: 3/24/2011

BAKER

U.S. ARMY ENGINEER DISTRICT, AFGHANISTAN
CORPS OF ENGINEERS
APO AE 09356

SITE ADAPT DESIGN
AD23 - ADMIN BUILDING - ARCH SPAN
ELEVATIONS

SHEET REFERENCE NUMBER:
A-201

3/24/2011 5:46 PM

A1 Size 594mm x 841mm

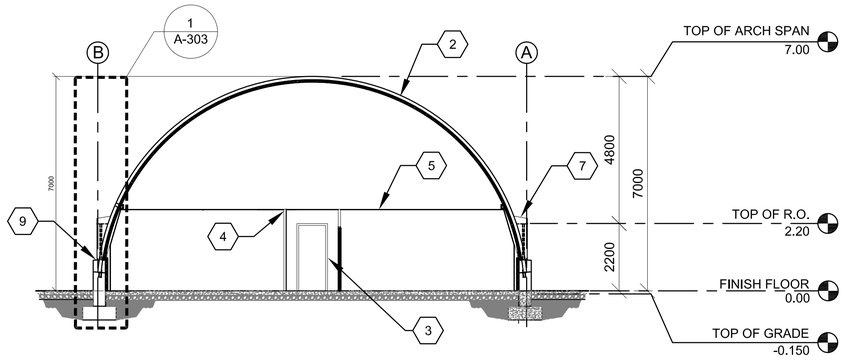

1 A-301 BUILDING SECTION
SCALE: 1:100

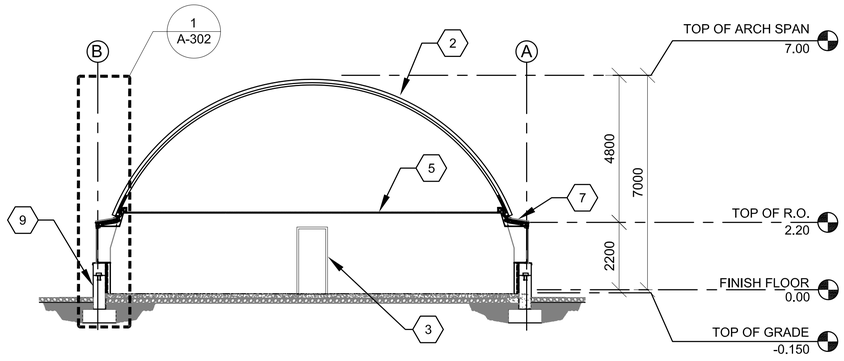

2 A-301 BUILDING SECTION
SCALE: 1:100

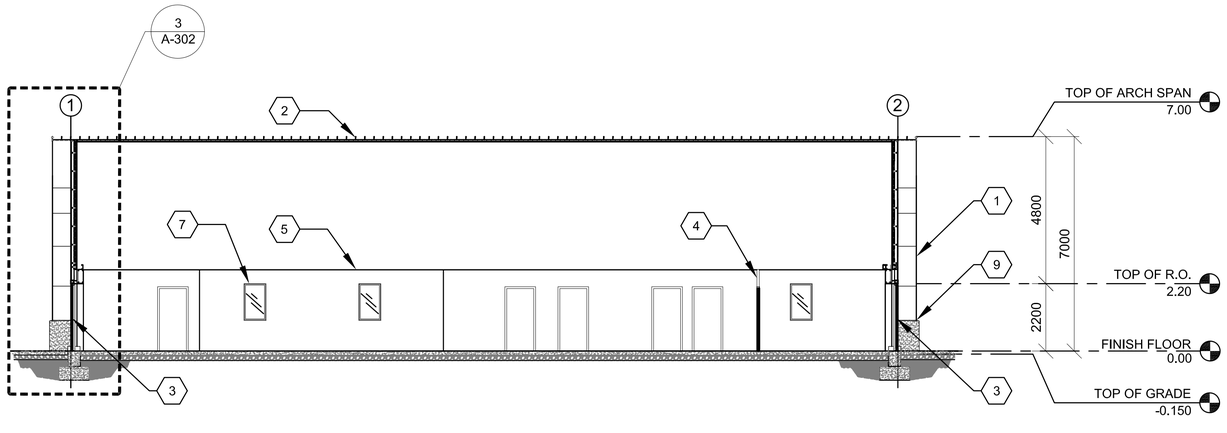

3 A-301 BUILDING SECTION
SCALE: 1:100

KEY NOTES:

1. EXTENSION OF ARCH SPAN
2. K-SPAN ROOF/WALL PANEL WITH POLYURETHANE/CEMENTITIOUS SPRAY - ON FIRE BARRIER
3. HOLLOW METAL FRAME WITH DOOR AS SCHEDULED
4. PARTITION AS SCHEDULED
5. CEILING SYSTEM AS SCHEDULED
6. NOT USED
7. SIDE WALL WINDOW AND DORMER FRAMING
8. NOT USED
9. CONCRETE STEM WALL

0 2000 4000
SCALE: 1:100

UNLESS OTHERWISE NOTED,
LINEAR DIMENSIONS
SHOWN ARE IN MILLIMETERS.

COMMONWEALTH OF VIRGINIA
PETER GARRETT SCHMIDT
No. 013167
ARCHITECT

US ARMY CORPS
OF ENGINEERS
AFGHANISTAN NORTH
DISTRICT

SYMBOL	DESCRIPTION	DATE	APPR.	SYMBOL	DESCRIPTION	DATE	APPR.

DESIGNED BY: PGS, SE, MR
DWN BY: SE, MDH, AH
CKD BY: PGS, SE, MR
REVIEWED BY:
SUBMITTED BY:
DATE: 3-24-2011
CONTRACT NO. W912ER-09-D-0002
DRAWING CODE:
FILE NAME:
PLOT SCALE: 1:100
PLOT DATE: 3/24/2011
REV: 0

BAKER

U.S. ARMY ENGINEER DISTRICT, AFGHANISTAN
CORPS OF ENGINEERS
APO AE 09356

SITE ADAPT DESIGN
AD23 - ADMIN BUILDING - ARCH SPAN
BUILDING SECTIONS

SHEET REFERENCE NUMBER:
A-301

3/24/2011 5:14 PM

A1 Size 594mm x 841mm

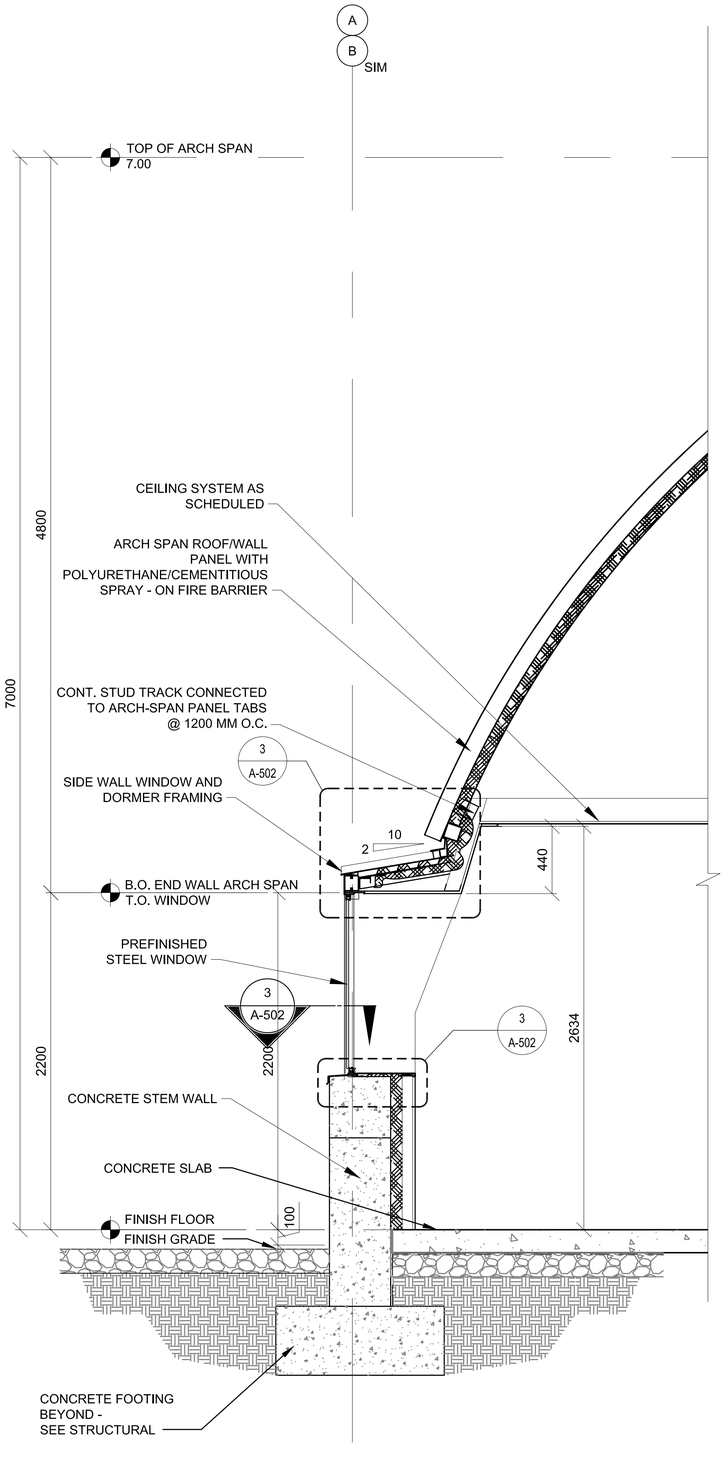

WALL SECTION - SIDE WALL THRU WINDOW

1 / A-302 SCALE: 1:20

NOT USED

2 / A-302 SCALE: 1:20

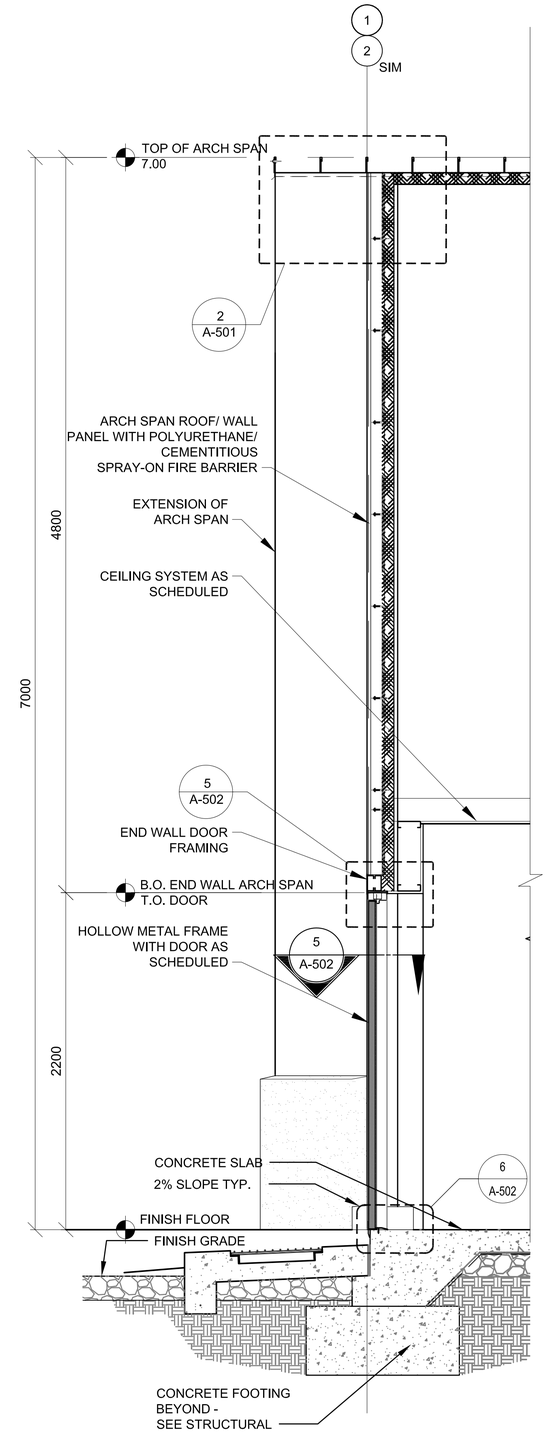

WALL SECTION - THRU END WALL H.M. DOOR

3 / A-302 SCALE: 1:20

0 500 1000 2000
SCALE: 1:50

UNLESS OTHERWISE NOTED, LINEAR DIMENSIONS SHOWN ARE IN MILLIMETERS.

COMMONWEALTH OF VIRGINIA
PETER GARRETT SCHMIDT
No. 013167
ARCHITECT

US ARMY CORPS OF ENGINEERS
AFGHANISTAN NORTH DISTRICT

SYMBOL	DESCRIPTION	DATE	APPR.	SYMBOL	DESCRIPTION	DATE	APPR.

DESIGNED BY: PGS, SE, MR
DWN BY: SE, MDH, AH
REVIEWED BY:
SUBMITTED BY:
DATE: 3/24/2011
CONTRACT NO. W912ER-09-D-0002
DRAWING CODE:
FILE NAME:
PLOT SCALE: 1:50
PLOT DATE: 3/24/2011
REV: 0
CKD BY: PGS, SE, MR

BAKER

U.S. ARMY ENGINEER DISTRICT, AFGHANISTAN
CORPS OF ENGINEERS
APO AE 09356

SITE ADAPT DESIGN
AD23 - ADMIN BUILDING - ARCH SPAN
WALL SECTIONS

SHEET REFERENCE NUMBER:
A-302

3/24/2011 1:34 PM

A1 Size 594mm x 841mm

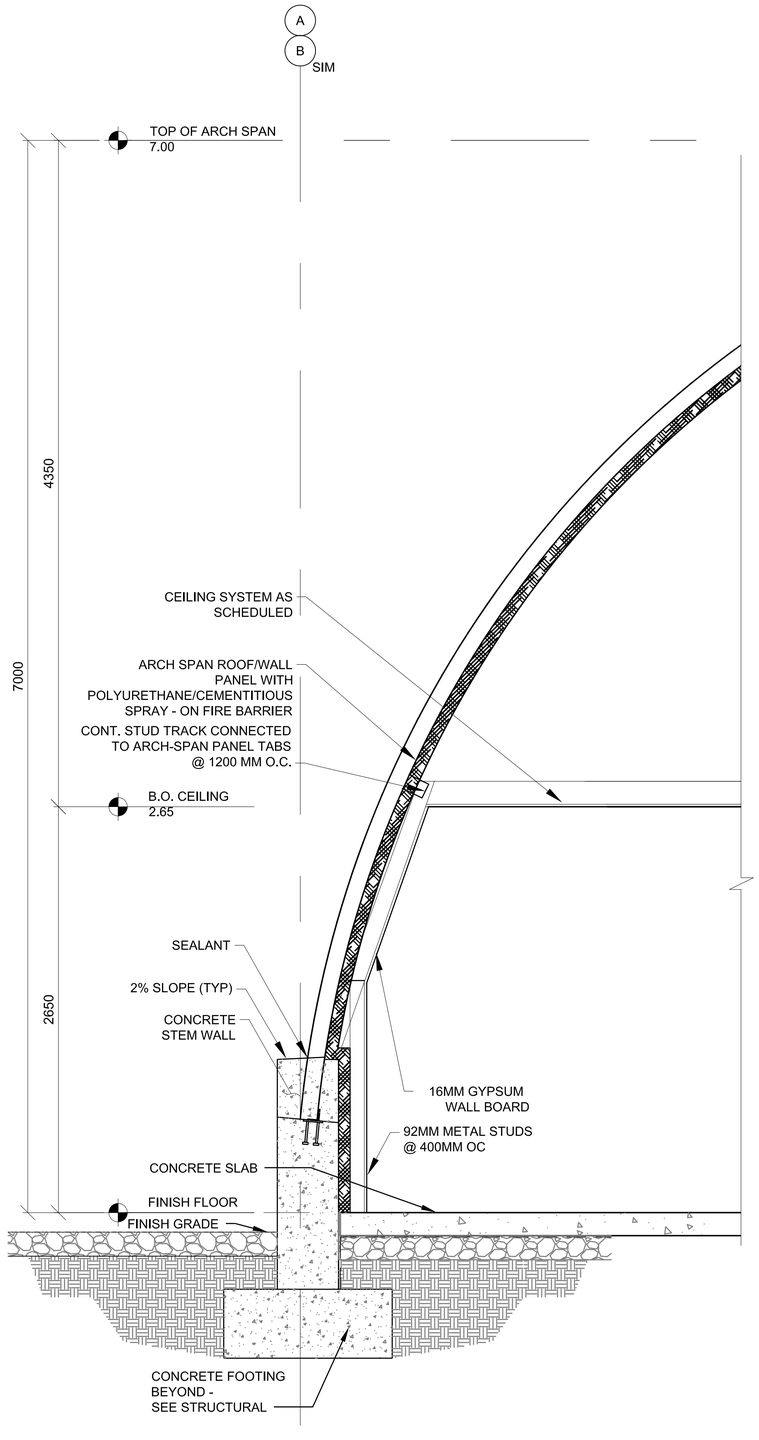

1 A-303

WALL SECTION - SIDE WALL THRU 1M STEM WALL

SCALE: 1:20

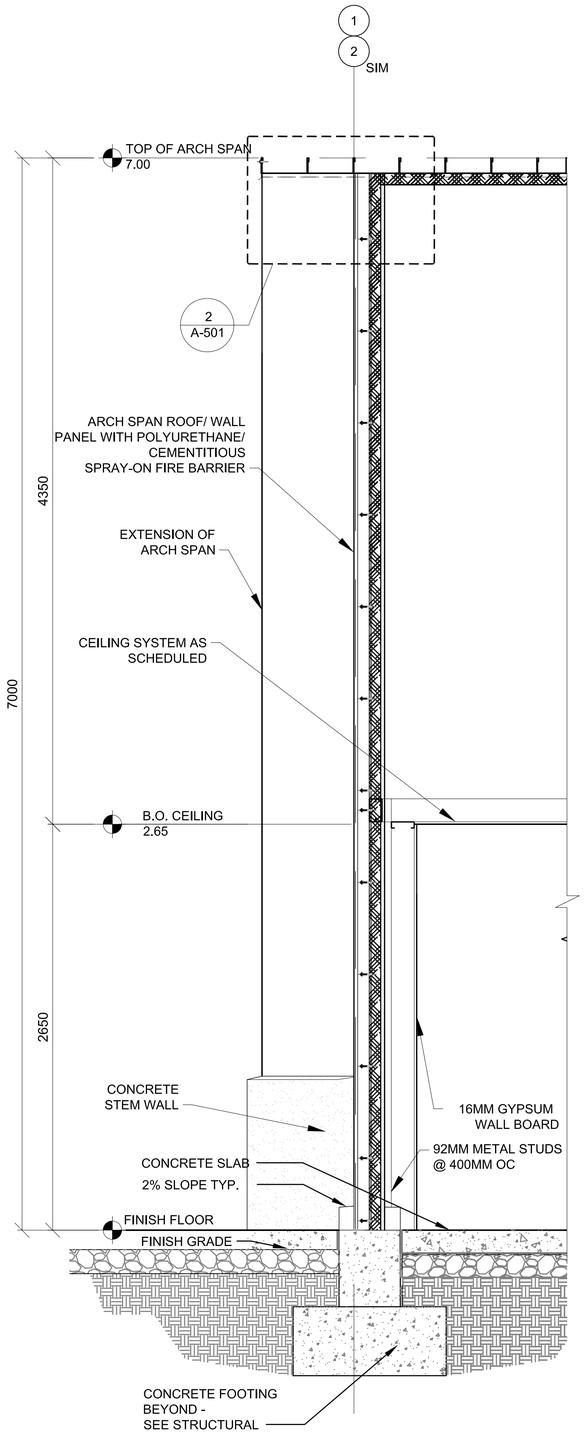

2 A-303

WALL SECTION - THRU END WALL

SCALE: 1:20

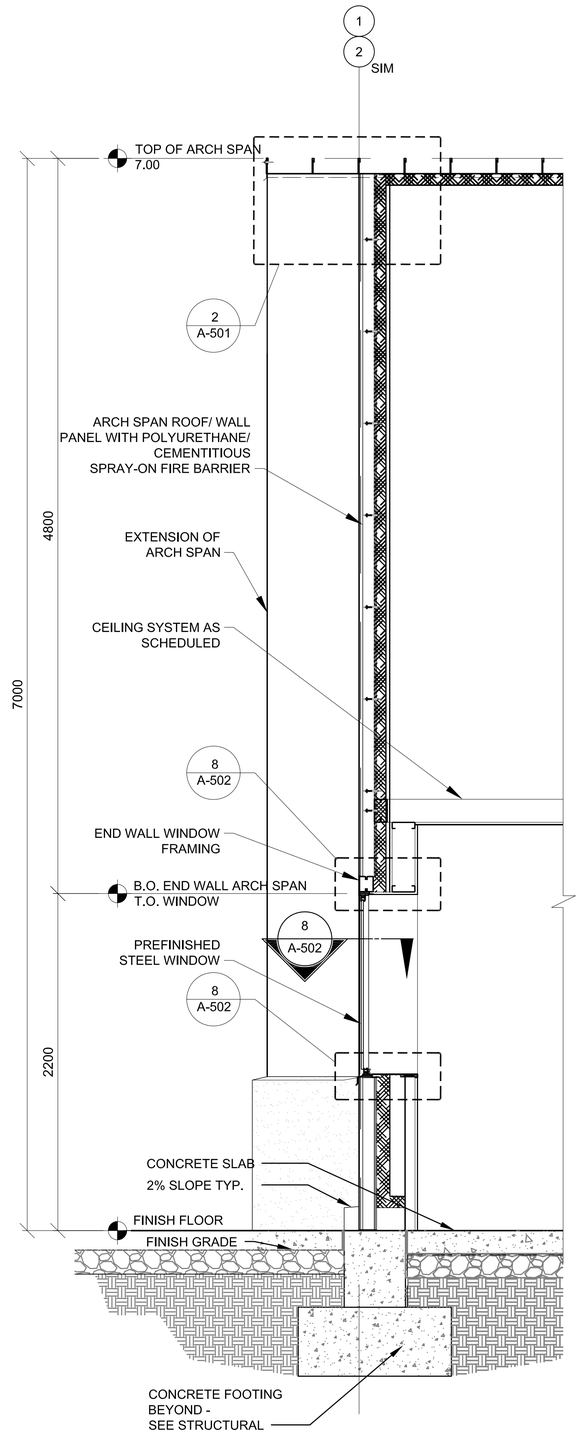

3 A-303

WALL SECTION - END WALL THRU WINDOW

SCALE: 1:20

0 500 1000 2000

SCALE: 1:50

UNLESS OTHERWISE NOTED, LINEAR DIMENSIONS SHOWN ARE IN MILLIMETERS.

COMMONWEALTH OF VIRGINIA
PETER GARRETT SCHMIDT
No. 013167
ARCHITECT

US ARMY CORPS OF ENGINEERS
AFGHANISTAN NORTH DISTRICT

SYMBOL	DESCRIPTION	DATE	APPR.	SYMBOL	DESCRIPTION	DATE	APPR.

DESIGNED BY: PGS, SE, MR
DWN BY: SE, MDH, AH
CKD BY: PGS, SE, MR
REVIEWED BY:
SUBMITTED BY:
DATE: 3/24/2011
REV: 0
CONTRACT NO. W912ER-09-D-0002
DRAWING CODE:
FILE NAME: W912ER-09-D-0002-AD23-ADMIN BUILDING-A-303.DWG
PLOT SCALE: 1:50
PLOT DATE: 3/24/2011

BAKER

U.S. ARMY ENGINEER DISTRICT, AFGHANISTAN
CORPS OF ENGINEERS
APO AE 09356

SITE ADAPT DESIGN

AD23 - ADMIN BUILDING - ARCH SPAN

WALL SECTIONS

SHEET REFERENCE NUMBER:

A-303

3/24/2011 1:34 PM

A1 Size 594mm x 841mm