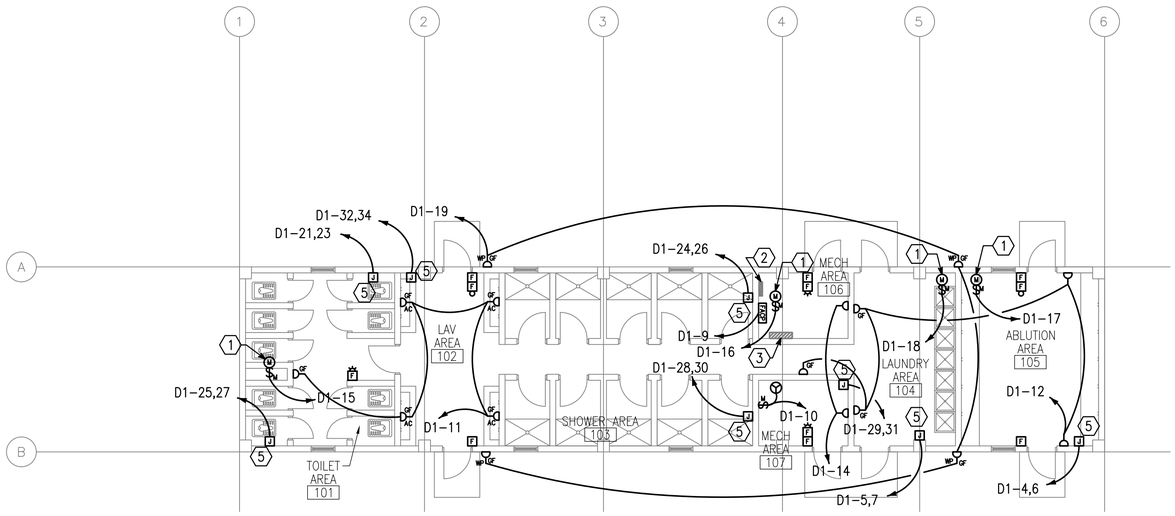

SHOWER AND LATRINE BUILDING FIRST FLOOR POWER PLAN

1 D-E2 | D-E2

SCALE: 1:100

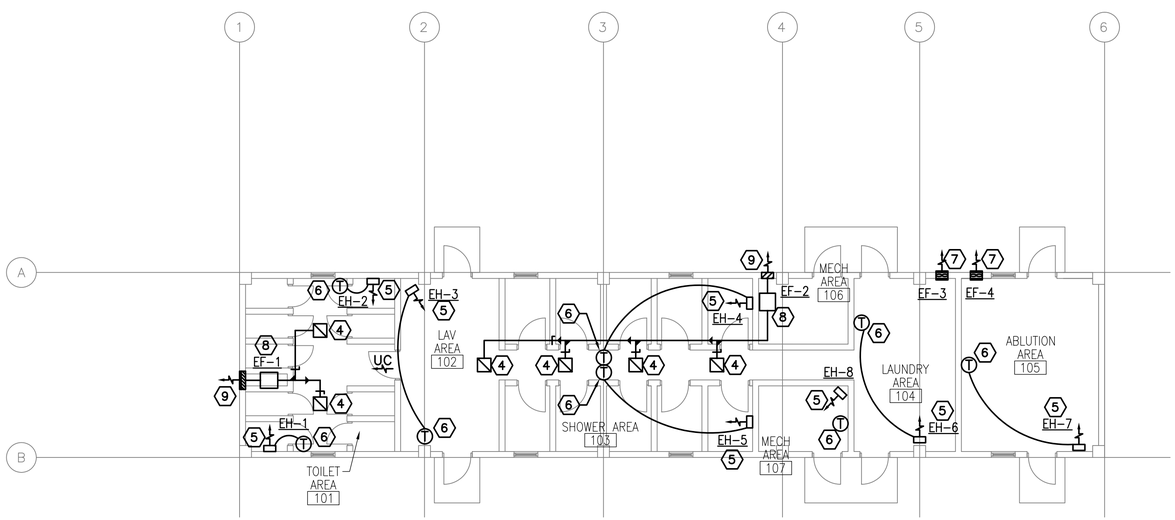

SHOWER AND LATRINE BUILDING FIRST FLOOR HVAC PLAN

2 D-E2 | D-E2

SCALE: 1:100

FAN SCHEDULE

NO.	TYPE	FAN CMS	DRIVE	HP	SP mmH20	ELECT. CHAR.	SWITCH
EF-1	INLINE	0.330	DIRECT	1/4	13	220/1/50	W/ LIGHTS
EF-2	INLINE	0.330	DIRECT	1/4	13	220/1/50	W/ LIGHTS
EF-3	WALL	0.100	DIRECT	FRACT	13	220/1/50	W/ LIGHTS
EF-4	WALL	0.100	DIRECT	FRACT	13	220/1/50	W/ LIGHTS

NOTE:
1. FANS SHALL BE CORROSION RESISTANT
2. INLINE FANS SHALL BE SURFACE MOUNTED WITH SPRING ISOLATORS.

ELECTRIC UNIT HEATER SCHEDULE

NO.	CMS	KW	F.A.T. °C	ELECT. CHAR.	MOUNTING
EH-1	.200		37	370/1/50	CEILING HUNG
EH-2	.200		37	370/1/50	CEILING HUNG
EH-3	.200		37	370/1/50	CEILING HUNG
EH-4	.200		37	370/1/50	CEILING HUNG
EH-5	.200		37	370/1/50	CEILING HUNG
EH-6	.200		37	370/1/50	CEILING HUNG
EH-7	.200		37	370/1/50	CEILING HUNG
EH-8	.200	3	37	370/1/50	CEILING HUNG

NOTE:
1. ALL HEATERS SHALL BE CORROSION RESISTANT

3. -DULE.
4. REFER TO DRAWING #R-E1 FOR POWER RISER OF PANELS.
5. REFER TO R-E SERIES DRAWINGS FOR PANEL SCHEDULES.
6. ALL I
7. THE FINAL LOCATION OF ALL DIFFUSERS, REGISTERS AND EXPOSED DUCTWORK SHALL BE CLOSELY COORDINATED WITH THE ELECTRICAL LIGHTING PLAN AND THE ARCHITECTURAL REFLECTED CEILING PLAN. EXPOSED DUCTWORK SHALL NOT PASS UNDER LIGHTS.

NUMBERED NOTE:

1. EXHAUST FAN.
2. PANEL 'D1'
3. PANEL 'DPI'
4. EXHAUST GRILLE BY MC.
5. ELECTRIC UNIT HEATER SUSPENDED FROM STRUCTURE ABOVE.
6. THERMOSTAT MOUNTED AT 1.5M AFF.
7. WALL MOUNTED EXHAUST FAN. MOUNT AT 300mm BELOW CEILING.
8. INLINE EXHAUST FAN, SECURED TO STRUCTURE ABOVE WITH SPRING ISOLATORS, DUCTED TO WALL CAP. DUCT BY MC.
9. 400x400 WALL CAP PER FAN MANUFACTURER INSTALLED BY MC.

1 0 1 2 3 4 5 6 7 8 9
1:100

REGISTERED PROFESSIONAL ENGINEER JOSEPH R. GAUS PE-074261

SYMBOL	DESCRIPTION	DATE	APR

DESIGNED BY: ALF | DATE: 04-01-08
DWN BY: ALF | SUBMITTED BY: JRG
CHK BY: JRG | FILE NO.: _____

Baker
MICHAEL BAKER JR., INC.
Airside Business Park
100 Airside Drive
Moon Township, Pa. 15108
(412) 269-6300

US Army Corps of Engineers
Transatlantic Programs Center

AFGHAN NATIONAL BORDER POLICE
AFGHANISTAN NATIONAL BORDER POLICE UNIT FACILITY
BORDER POLICE COMPANY
SHOWER AND LATRINE BUILDING FIRST FLOOR POWER PLAN

SHEET REFERENCE NUMBER:
D-E2

READY TO ADVERTISE SUBMISSION

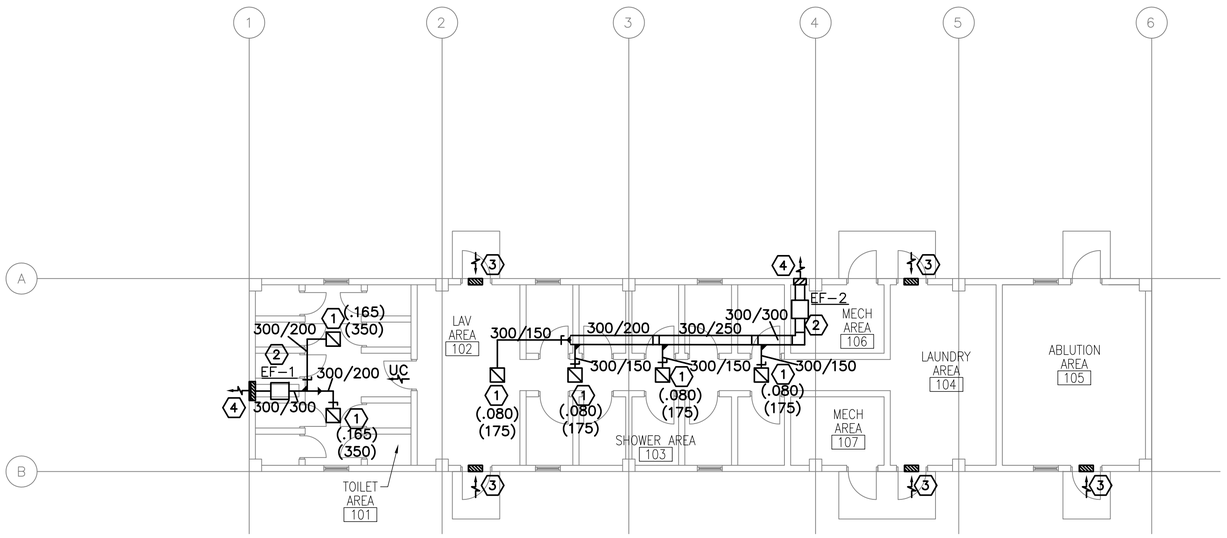

1 D-M1 | D-M1 SHOWER AND LATRINE BUILDING FIRST FLOOR HVAC PLAN

SCALE: 1:100

GENERAL NOTES:

1. DO NOT SCALE DRAWINGS – ALL DIMENSIONS AND CONDITIONS SHALL BE CHECKED AND VERIFIED BY THE CONTRACTOR AT THE SITE.
2. ALL WORK PERFORMED ON THIS BUILDING SHALL BE IN COMPLIANCE WITH ALL PERTINENT CODES, RULES, ORDINANCES AND REGULATIONS OF THE GOVERNING AUTHORITIES.
3. ALL WORK PERFORMED UNDER AND IN CONNECTION WITH THESE DRAWINGS AND SPECIFICATIONS SHALL BE IN STRICT COMPLIANCE WITH THE LATEST SAFETY AND HEALTH STANDARDS.
4. SEE ELECTRICAL DRAWINGS FOR ALL ELECTRICAL MECHANICAL EQUIPMENT, FANS, ELECTRIC HEATERS, ETC. WHICH SHALL BE SUPPLIED AND INSTALLED BY THE ELECTRICAL CONTRACTOR.
5. ALL DUCT AT SHOWER AREA SHALL BE ALUMINUM.
6. ALL DUCTWORK IS THE RESPONSIBILITY OF THE MECHANICAL CONTRACTOR.

NUMBERED NOTE:

1. 300X300 (12X12) EGC, BALANCE TO CMS (CFM) IN PARENTHESIS.
2. INLINE EXHAUST FAN, SECURED TO STRUCTURE ABOVE WITH SPRING ISOLATORS, DUCTED TO WALL CAP. FAN SUPPLIED AND INSTALLED BY E.C. DUCT BY M.C.
3. 400X200 (16X8) LOW LEAKAGE GRAVITY WALL LOUVER WITH BACKDRAFT DAMPER FOR RELIEF AIR. MOUNTED ABOVE DOOR.
4. 400x400 (16x16) WALL CAP PER FAN MANUFACTURER. INSTALLED BY M.C.

1 0 1 2 3 4 5 6 7 8 9
1:100

SYMBOL	DESCRIPTION	DATE	APR

DESIGNED BY: RML
DWN BY: JJN
CHK BY: MRS
DATE: 04-01-08
SUBMITTED BY: BAKER
FILE NO.:

Baker
MICHAEL BAKER JR., INC.
Airside Business Park
100 Airside Drive
Moon Township, Pa. 15108
(412) 269-6300

US Army Corps of Engineers
Transatlantic Programs Center

AFGHAN NATIONAL BORDER POLICE
AFGHANISTAN NATIONAL BORDER POLICE UNIT FACILITY
BORDER POLICE COMPANY
SHOWER AND LATRINE BUILDING HVAC FLOOR PLAN

SHEET REFERENCE NUMBER:
D-M1

READY TO ADVERTISE SUBMISSION

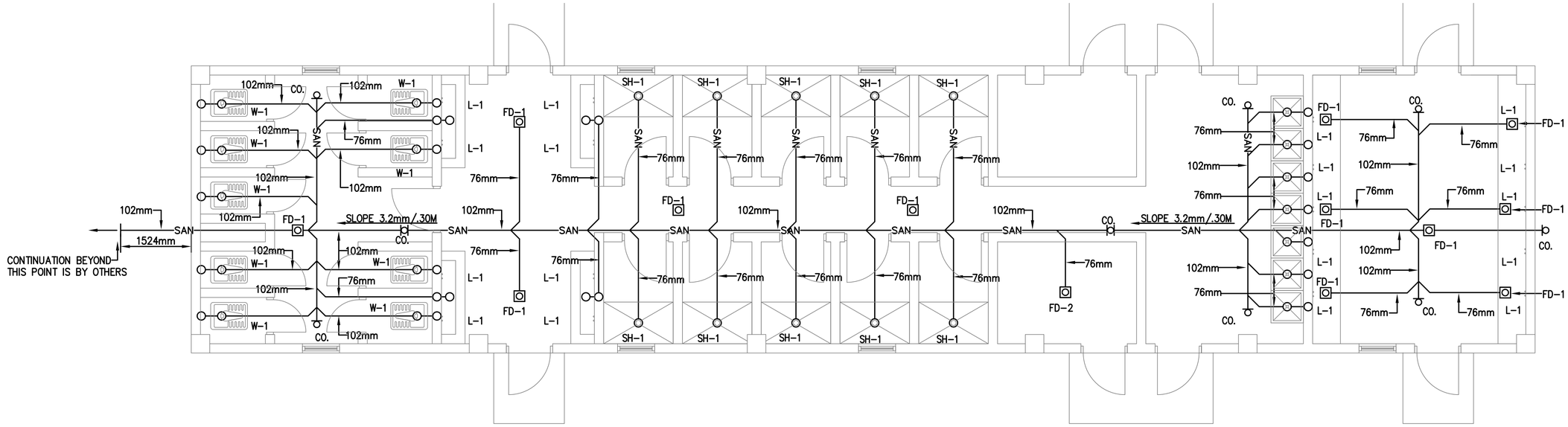

1 D-P1 D-P1 SHOWER AND LATRINE BUILDING FLOOR PLAN - PLUMBING (SANITARY)

SCALE: 1:50

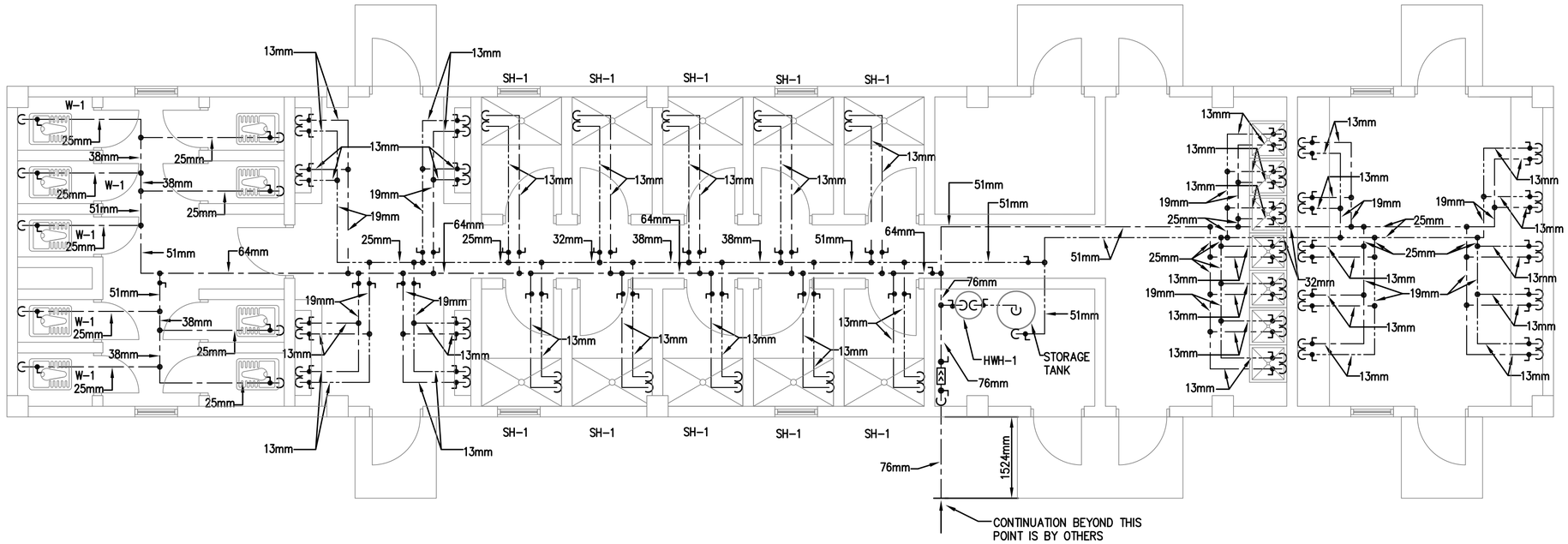

2 D-P1 D-P1 SHOWER AND LATRINE BUILDING FLOOR PLAN - PLUMBING (WATER)

SCALE: 1:50

FLOOR PLAN NOTES:

1. DO NOT SCALE DRAWINGS – ALL DIMENSIONS AND CONDITIONS SHALL BE CHECKED AND VERIFIED BY THE CONTRACTOR AT THE SITE.
2. ALL WORK PERFORMED ON THIS BUILDING SHALL BE IN COMPLIANCE WITH ALL PERTINENT CODES, RULES, ORDINANCES AND REGULATIONS OF THE GOVERNING AUTHORITIES.
3. ALL WORK PERFORMED UNDER AND IN CONNECTION WITH THESE DRAWINGS AND SPECIFICATIONS SHALL BE IN STRICT COMPLIANCE WITH THE LATEST SAFETY AND HEALTH STANDARDS.
4. REPORT ANY DISCREPANCIES FOUND IN THE PLUMBING DRAWINGS AND/OR IN THE SPECIFICATIONS DURING THE BIDDING PROCESS FOR CLARIFICATION BY THE ENGINEER.
5. ALL EASTERN STYLE WATER CLOSETS IN THIS FACILITY ARE TO HAVE THE FIXTURE DESIGNATION OF W-1. EACH FIXTURE SHALL HAVE A (1) INCH (25mm) COLD WATER CONNECTION AND A (4) INCH (102mm) SANITARY CONNECTION.
6. ALL TROUGH FIXTURES IN THIS FACILITY ARE TO HAVE THE FIXTURE DESIGNATION OF L-1. EACH FIXTURE SHALL HAVE A (1/2 INCH) (13mm) COLD WATER, (1/2 INCH) (13mm) HOT WATER CONNECTION AND A (3 INCH) (76mm) SANITARY CONNECTION.
7. PLUMBING CONTRACTOR TO PROVIDE WATER HAMMER ARRESTORS AT ALL WATER CLOSETS.
8. PLUMBING CONTRACTOR TO PROVIDE TRAP PRIMERS AND 1/2" (13mm) COLD WATER LINES FOR ALL FLOOR DRAINS. COLD WATER LINES TO BE UNDER THE FLOOR FROM TRAP PRIMERS TO TRAPS ON FLOOR DRAINS.
9. REFER TO SHEET S-P1 & S-P2 FOR DETAILS AND SYMBOLS.
10. ALL WATER LINES TO BE EXPOSED. RUN LINES TIGHT TO CEILING AND WALL.
11. ALL FIXTURES TO BE "LOW FLOW EFFICIENT TYPE".

1 0 1 2 3 4 5 6 7 8 9
1:100

SYMBOL	DESCRIPTION	DATE	APR

DESIGNED BY: RMH
DATE: 04-01-08
DWN BY: RMH
SUBMITTED BY: BAKER
CHK BY: MRS
FILE NO.:

Baker
MICHAEL BAKER JR., INC.
Airside Business Park
100 Airside Drive
Moon Township, Pa. 15108
(412) 269-6300

US Army Corps of Engineers
Transatlantic Programs Center

AFGHAN NATIONAL BORDER POLICE
AFGHANISTAN NATIONAL BORDER POLICE FACILITY
BORDER POLICE COMPANY

SHOWER AND LATRINE BUILDING
FLOOR PLAN - PLUMBING

SHEET REFERENCE NUMBER:
D-P1

READY TO ADVERTISE SUBMISSION

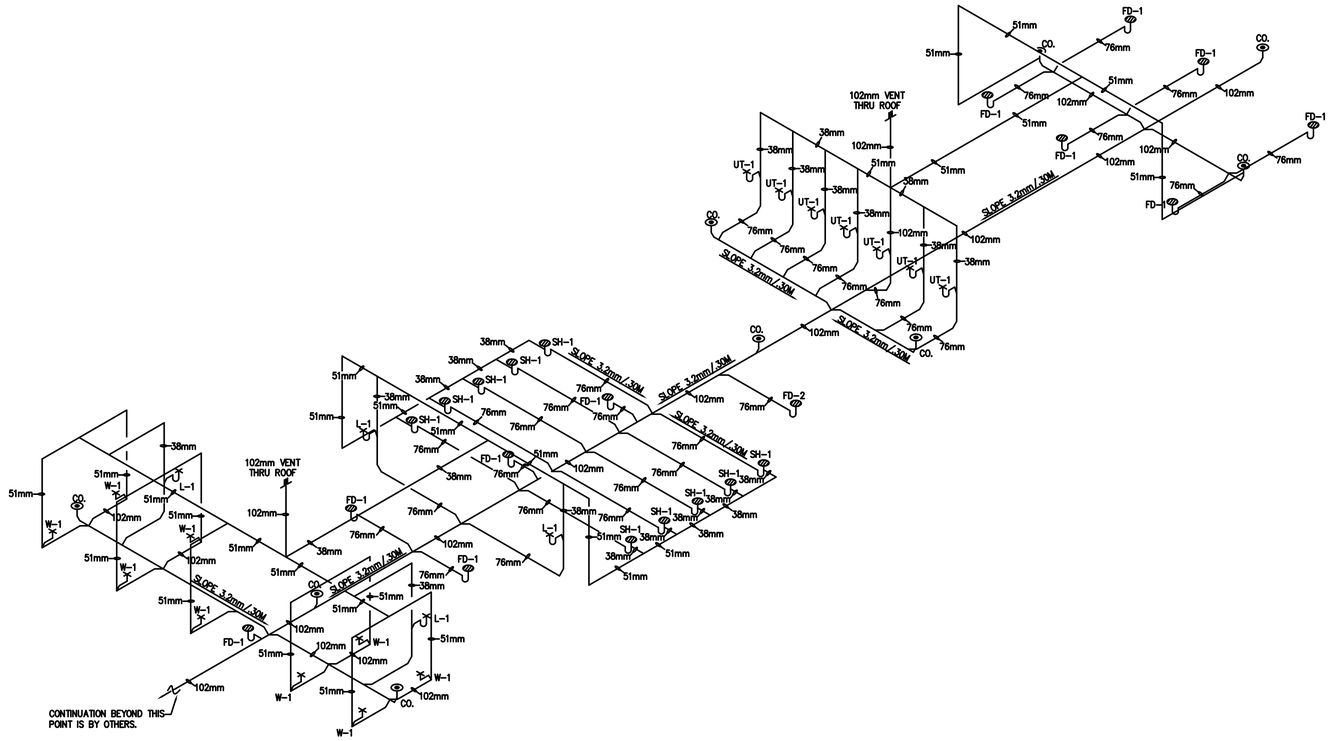

1 D-P2 | D-P2

SHOWER AND LATRINE BUILDING - DRAINAGE ISOMETRIC

SCALE: 1:100

1 0 1 2 3 4 5 6 7 8 9
1:100

SYMBOL	DESCRIPTION	DATE	APR

DESIGNED BY: RMH
DWN BY: RMH
CHK BY: MRS
DATE: 04-01-08
SUBMITTED BY: BAKER
FILE NO.:

Baker
MICHAEL BAKER JR., INC.
Airside Business Park
100 Airside Drive
Moon Township, Pa. 15108
(412) 269-6300

US Army Corps of Engineers
Transatlantic Programs Center

AFGHAN NATIONAL BORDER POLICE
AFGHANISTAN NATIONAL BORDER POLICE UNIT FACILITY
BORDER POLICE COMPANY

SHOWER AND LATRINE BUILDING
DRAINAGE ISOMETRIC

SHEET REFERENCE NUMBER:
D-P2

READY TO ADVERTISE SUBMISSION

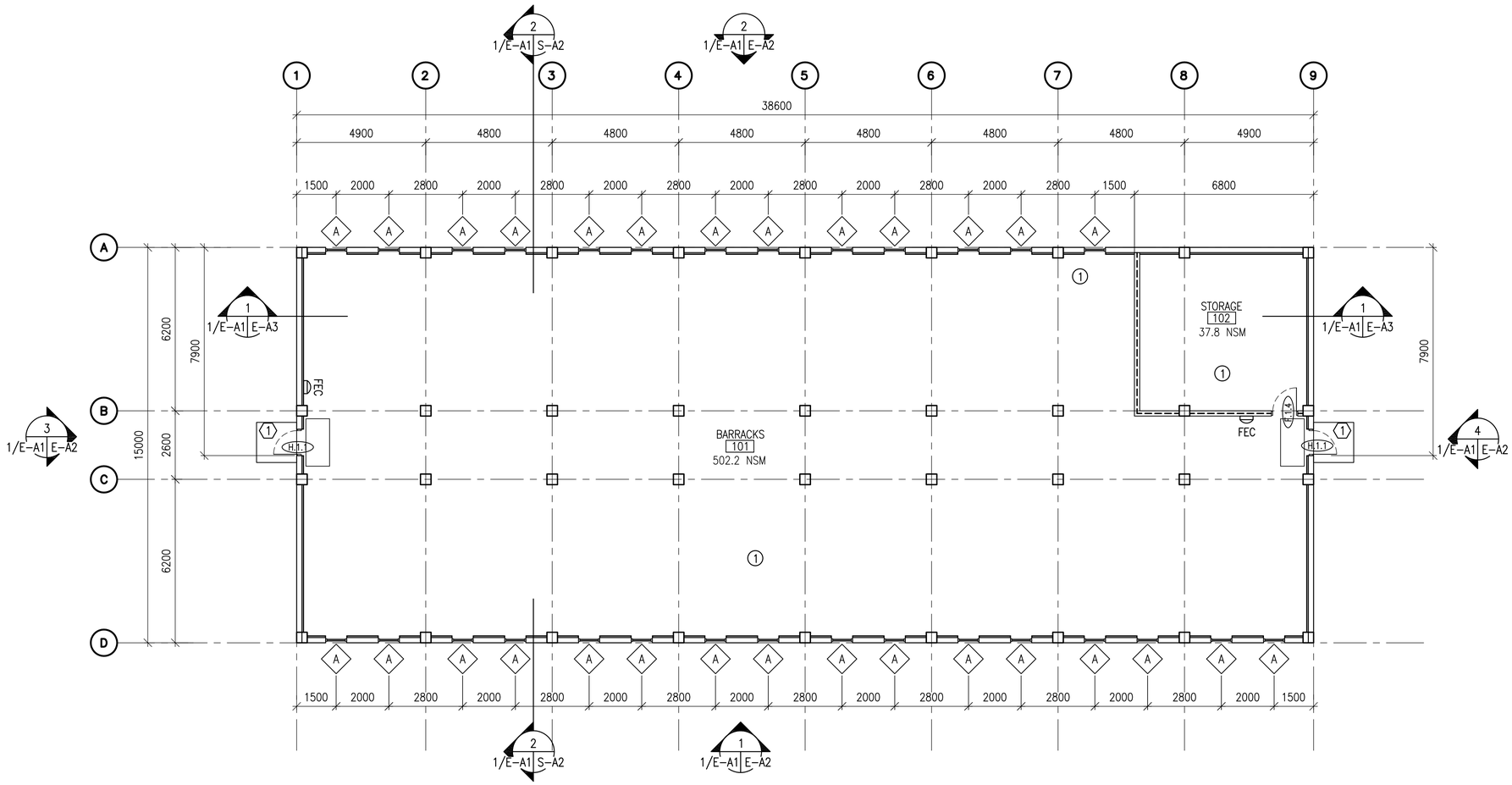

BARRACKS (OPEN BAY) FLOOR PLAN

1 / E-A1 | E-A1 SCALE: 1:100

FLOOR PLAN NOTES:

1. ALL INTERIOR PARTITIONS SHALL BE TYPE 1 UNLESS NOTED OTHERWISE
2. OPENINGS FOR DOORS SHALL BE LOCATED 200 MM FROM THE ADJACENT WALL UNLESS NOTED OTHERWISE
3. SURFACES TO BE PAINTED SHALL BE CLEAN AND FREE OF FOREIGN MATTER BEFORE APPLICATION OF PAINT. CLEANING SHALL BE SCHEDULED SO THAT DUST AND OTHER CONTAMINANTS WILL NOT FALL ON WET, NEWLY PAINTED SURFACES.
4. CONCRETE AND INTERIOR MASONRY SURFACES GROUTED SOLID SHALL BE ALLOWED TO DRY AT LEAST 30 DAYS BEFORE PAINTING EXCEPT CONCRETE SLAB ON GRADE WHICH SHALL BE ALLOWED TO CURE 90 DAYS BEFORE PAINTING.
5. PAINTS CONTAINING LEAD IN EXCESS OF 0.06 PERCENT BY WEIGHT OF THE TOTAL NONVOLATILE CONTENT SHALL NOT BE USED.
6. MERCURIAL FUNGICIDES SHALL NOT BE USED IN OIL-BASE PAINT.
7. REMOVE LOOSE DIRT AND CLEAN SURFACES BEFORE PAINTING. APPLY PAINT TO INTERIOR STRUCTURAL RIGID FRAMINGS AND CEILINGS AND TEST FOR ADHESION. PRIMER COAT FOR MASONRY. INITIAL FIRST COAT WITH AN ACRYLIC LATEX PAINT FOR EXTERIOR SURFACES AND A SECOND COAT WITH A WATER REPELLENT ACRYLIC LATEX PAINT.
8. INTERIOR METAL DOORS AND FRAMES SHALL RECEIVE A PRIMER COAT PLUS TWO COATS OF PAINT.
9. DIMENSIONS ARE TO CENTERLINE OF WINDOW OPENINGS, AND TO HINGE SIDE OF DOOR OPENINGS.
10. SEE ELECTRICAL FOR STOVE SLEEVE LOCATIONS

KEY NOTES:

1. CONCRETE STOOP – RE: DETAIL 1/S-A13.

LEGEND:

- F.1.4 — DOOR TYPE, SEE SHEET S-A8
- 1 — PARTITION TYPE, SEE SHEET S-A3
- A — WINDOW TYPE, SEE SHEET S-A8
- X — KEY NOTE
- FEC — FIRE EXTINGUISHER CABINET
- 1 HR. RATED FIRE WALL
- X — ROOM FINISH TYPES SEE SHEET S-A8
- RUBBER ENTRANCE MAT (900x1800)

UNLESS OTHERWISE NOTED, LINEAR DIMENSIONS SHOWN ARE IN MILLIMETERS (MM)

1 0 1 2 3 4 5 6 7 8 9
1:100

SOUTH CAROLINA STATE REGISTERED ARCHITECT
KEVIN R. CHAFIN
N. Charleston, SC
6374

SYMBOL	DESCRIPTION	DATE	APR

DESIGNED BY: BAKER	DATE: 04-01-08	
DWN BY: KJG	SUBMITTED BY: BAKER	
CHK BY: KRC	FILE NO.:	

Baker
MICHAEL BAKER JR., INC.
Airside Business Park
100 Airside Drive
Moon Township, Pa. 15108
(412) 269-6300

US Army Corps of Engineers
Transatlantic Programs Center

AFGHAN NATIONAL BORDER POLICE
AFGHANISTAN NATIONAL BORDER POLICE UNIT FACILITY
BORDER POLICE COMPANY
BARRAKCS (OPEN BAY)
FLOOR PLAN

SHEET REFERENCE NUMBER:
E-A1

READY TO ADVERTISE SUBMISSION

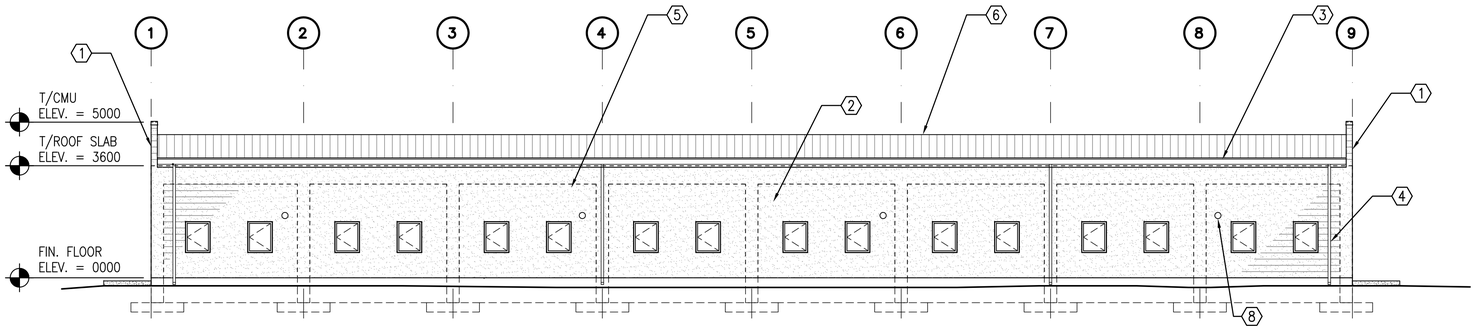

1 BARRACKS (OPEN BAY) ELEVATION
1/E-A1 | E-A2 SCALE: 1:100

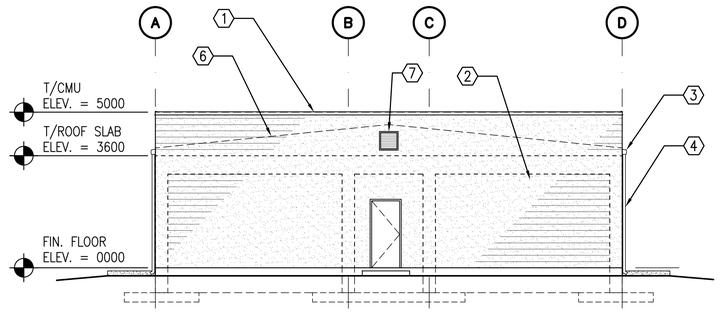

3 BARRACKS (OPEN BAY) ELEVATION
1/E-A1 | E-A2 SCALE: 1:100

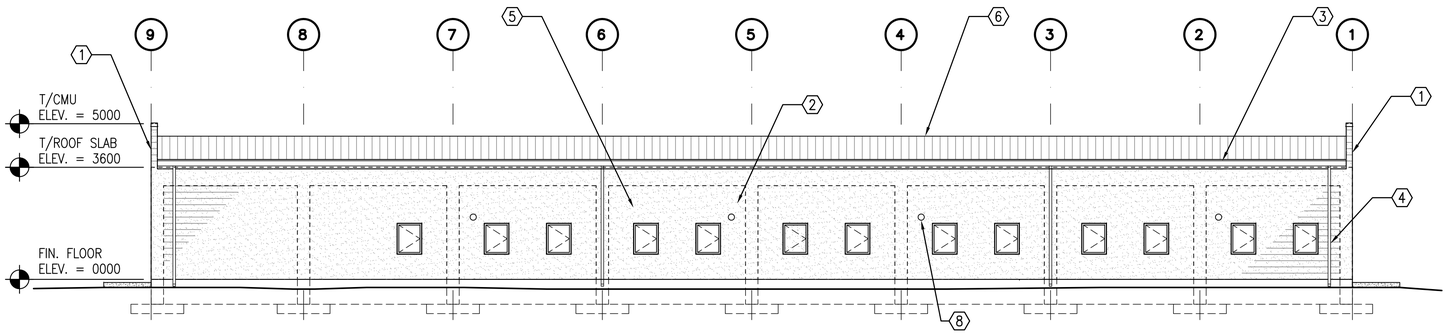

2 BARRACKS (OPEN BAY) ELEVATION
1/E-A1 | E-A2 SCALE: 1:100

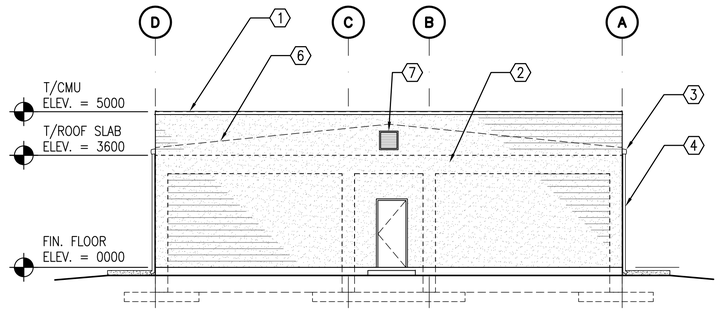

4 BARRACKS (OPEN BAY) ELEVATION
1/E-A1 | E-A2 SCALE: 1:100

KEY NOTES:

1. EXTERIOR CONCRETE WALL W/ STUCCO FINISH AND PARAPET CAP
2. STUCCO ON CMU
3. METAL GUTTER
4. METAL DOWNSPOUT WITH SPLASH BLOCK
5. STUCCO CONTROL JOINT ALIGNED WITH CMU CONTROL JOINT
6. CORRUGATED METAL ROOF
7. 600x600 LOUVER
8. WOOD STOVE SLEEVE – SEE ELECTRICAL

GENERAL NOTES:

1. COORDINATE SIZE AND LOCATION OF OPENINGS FOR MECHANICAL ITEMS WITH MECHANICAL DRAWINGS.
2. PROVIDE STRUCTURAL LINTELS AS REQUIRED – RE: STRUCT

UNLESS OTHERWISE NOTED, LINEAR DIMENSIONS SHOWN ARE IN MILLIMETERS (MM)

1 0 1 2 3 4 5 6 7 8 9
1:100

SOUTH CAROLINA STATE REGISTERED ARCHITECT
KEVIN R. CHAFIN
N. Charleston, SC
6374

SYMBOL	DESCRIPTION	DATE	APR

DESIGNED BY: BAKER
DWN BY: KJG
CHK BY: KRC
DATE: 04-01-08
SUBMITTED BY: BAKER
FILE NO.:

Baker
MICHAEL BAKER JR., INC.
Airside Business Park
100 Airside Drive
Moon Township, Pa. 15108
(412) 269-6300

US Army Corps of Engineers
Transatlantic Programs Center

AFGHAN NATIONAL BORDER POLICE
AFGHANISTAN NATIONAL BORDER POLICE UNIT FOUTY
BORDER POLICE COMPANY

BARRACKS (OPEN BAY) ELEVATIONS

SHEET REFERENCE NUMBER:
E-A2

READY TO ADVERTISE SUBMISSION

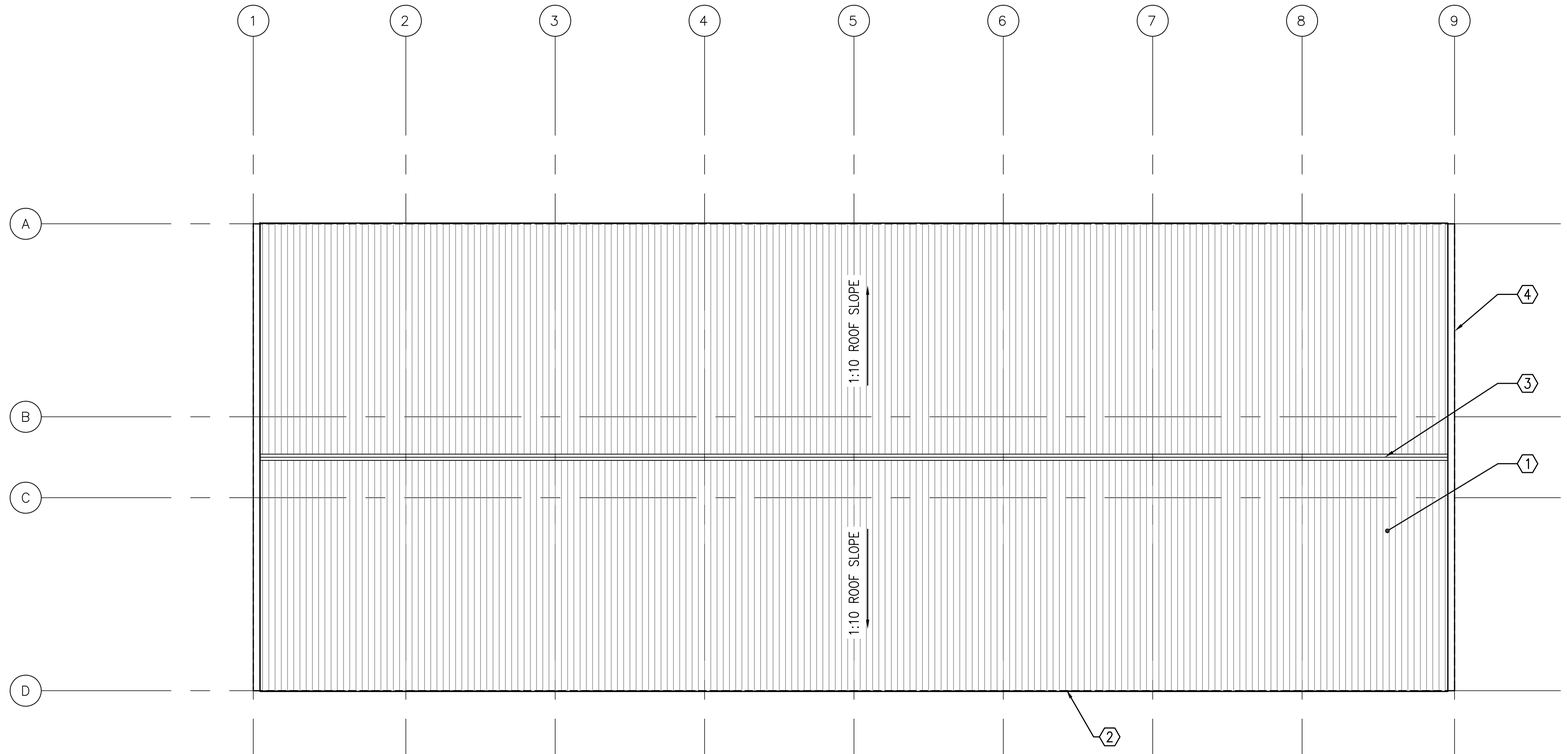

BARRACKS (OPEN BAY) ROOF PLAN

1 E-A3 | E-A3 SCALE: 1:100

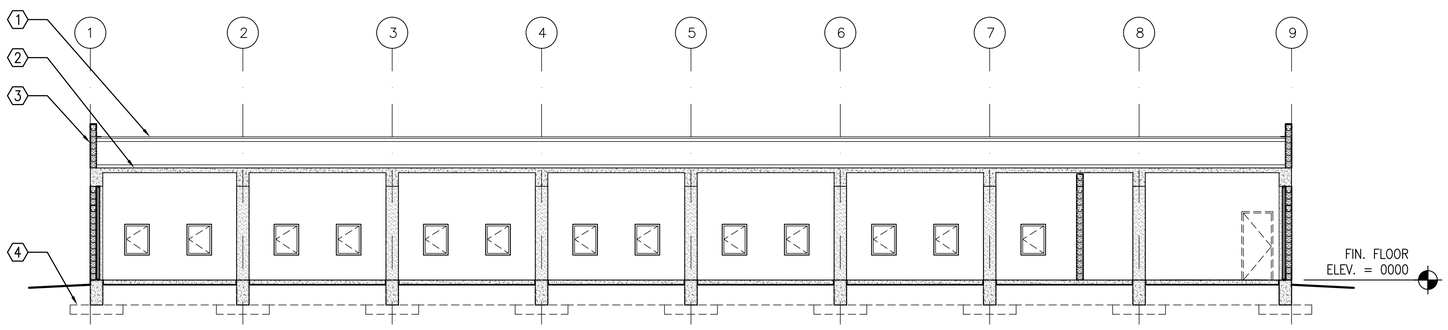

BARRACKS (OPEN BAY) BUILDING SECTION

2 E-A3 | E-A3 SCALE: 1:100

KEY NOTES: (X)

1. CORRUGATED METAL ROOF
2. LINE OF BUILDING BELOW
3. RIDGE
4. PARAPET WALL W/ CAP

KEY NOTES: (X)

1. CORRUGATED METAL ROOF
2. CONCRETE SLAB
3. PARAPET WALL W/ CAP
4. SEE STRUCTURAL FOR FOUNDATION

UNLESS OTHERWISE NOTED, LINEAR DIMENSIONS SHOWN ARE IN MILLIMETERS (MM)

1 0 1 2 3 4 5 6 7 8 9
1:100

SOUTH CAROLINA STATE REGISTERED ARCHITECT
KEVIN R. CHAFIN
N. Charleston, SC
6374

SYMBOL	DESCRIPTION	DATE	APR

DESIGNED BY: BAKER
DATE: 04-01-08
DWN BY: KJG
SUBMITTED BY: BAKER
CHK BY: KRC
FILE NO.:

Baker
MICHAEL BAKER JR., INC.
Airside Business Park
100 Airside Drive
Moon Township, Pa. 15108
(412) 269-6300

US Army Corps of Engineers
Transatlantic Programs Center

AFGHAN NATIONAL BORDER POLICE
AFGHANISTAN NATIONAL BORDER POLICE UNIT FACILITY
BORDER POLICE COMPANY
BARRACKS (OPEN BAY)
ROOF PLAN & BUILDING SECTION

SHEET REFERENCE NUMBER:
E-A3

READY TO ADVERTISE SUBMISSION

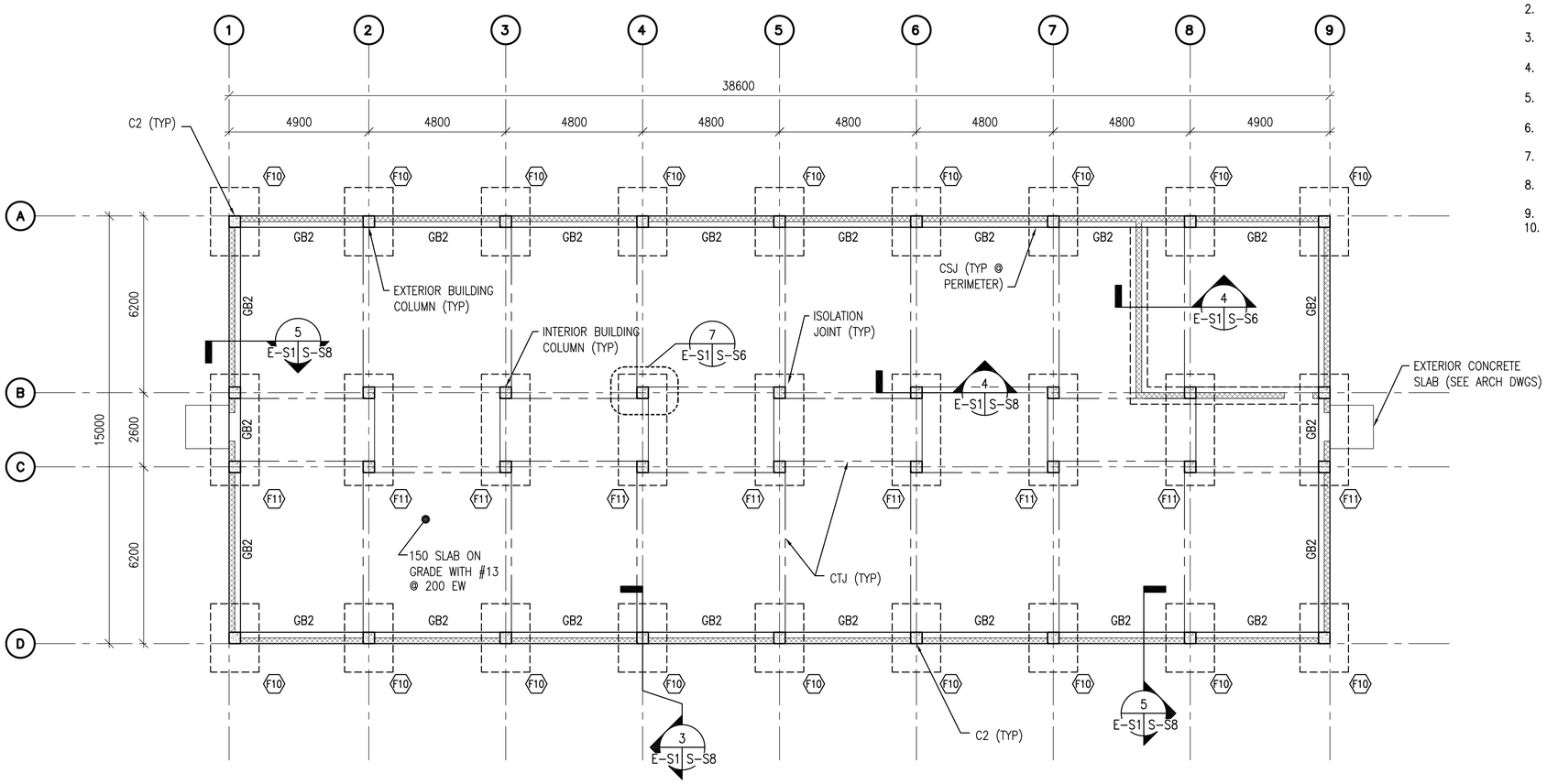

1 E-S1 E-S1 BARRACKS (OPEN BAY) FOUNDATION PLAN

SCALE: 1:100

PLAN NOTES:

1. FINISH FIRST FLOOR ELEVATION SHALL BE (DATUM 0.0). ALL PLUS OR MINUS DIMENSIONS INDICATED ON PLAN OR REFERRED TO IN NOTES RELATE TO FINISH FIRST FLOOR ELEVATION.
2. TOP OF EXTERIOR FOOTINGS SHALL BE −500 UNLESS OTHERWISE INDICATED.
3. TOP OF INTERIOR FOOTING SHALL BE −400 UNLESS OTHERWISE INDICATED.
4. SPREAD FOOTINGS INDICATED BY F# ON PLAN. REFER TO SPREAD FOOTING SCHEDULE ON DRAWING S−S4.
5. COLUMNS INDICATED BY C# ON PLAN. REFER TO COLUMN SCHEDULE ON DRAWING S−S4.
6. GRADE BEAM INDICATED BY GB# ON PLAN. REFER TO BEAM SCHEDULE ON DRAWING S−S4
7. REFER TO DRAWINGS S−S1 TO S−S2 FOR STRUCTURAL NOTES AND BASIS OF DESIGN.
8. CTJ & CSJ INDICATES SLAB CONTROL OR CONSTRUCTION JOINTS RESPECTIVELY. REFER TO DRAWING S−S5 FOR DETAILS.
9. SEE CMU WALL REINFORCING SCHEDULE ON DRAWING S−S4.
10. REFER TO ARCHITECTURAL DRAWINGS FOR MASONRY PARTITION TYPES.

UNLESS OTHERWISE NOTED, LINEAR DIMENSIONS SHOWN ARE IN MILLIMETERS (MM)

1 0 1 2 3 4 5 6 7 8 9
1:100

GEORGIA REGISTERED No. 27141 PROFESSIONAL ENGINEER CHRISTOPHER W. WILLMORE

SYMBOL	DESCRIPTION	DATE	APR

DESIGNED BY: BAKER
DATE: 04-01-08
DWN BY: RCG
SUBMITTED BY: BAKER
CHK BY: CWW
FILE NO.:

Baker
MICHAEL BAKER JR., INC.
Airside Business Park
100 Airside Drive
Moon Township, Pa. 15108
(412) 269-6300

US Army Corps of Engineers
Transatlantic Programs Center

AFGHAN NATIONAL BORDER POLICE
AFGHANISTAN NATIONAL BORDER POLICE UNIT FACILITY
BORDER POLICE COMPANY

BARRACKS (OPEN BAY) FOUNDATION PLAN

SHEET REFERENCE NUMBER:
E-S1

READY TO ADVERTISE SUBMISSION

PLAN NOTES:

1. TOP OF ROOF SLAB ELEVATION= 3600 UNLESS NOTED OTHERWISE
2. COLUMNS INDICATED THUS C# ON PLAN. REFER TO COLUMN SCHEDULE ON DRAWING S-S4.
3. RB# DENOTES ROOF BEAM TYPE. SEE BEAM SCHEDULE ON DRAWING S-S4.
4. REFER TO DRAWINGS S-S1 AND S-S2 FOR STRUCTURAL NOTES AND BASIS OF DESIGN.
5. REFER TO ARCHITECTURAL DRAWINGS FOR MASONRY PARTITION TYPES.
6. REFERENCE ARCHITECTURAL DRAWINGS FOR COLD-FORMED STEEL OVERFRAMING ABOVE ROOF SLAB

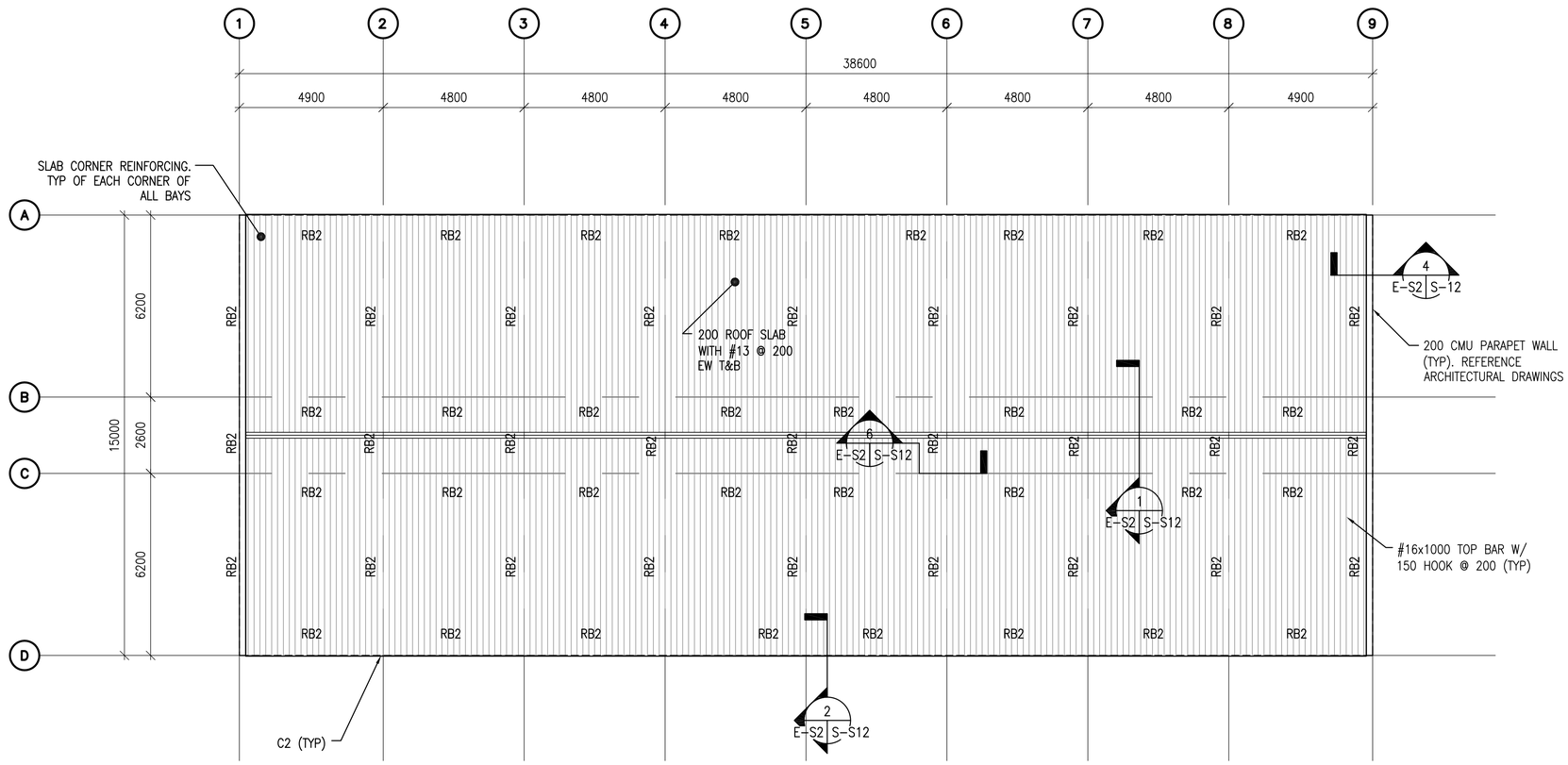

1 G-S1 G-S1 BARRACKS (OPEN BAY) ROOF FRAMING PLAN

SCALE: 1:100

UNLESS OTHERWISE NOTED, LINEAR DIMENSIONS SHOWN ARE IN MILLIMETERS (MM)

1 0 1 2 3 4 5 6 7 8 9

1:100

GEORGIA REGISTERED PROFESSIONAL ENGINEER No. 27141 CHRISTOPHER W. WILLMORE

SYMBOL	DESCRIPTION	DATE	APR

DESIGNED BY: BAKER	DATE: 04-01-08
DWN BY: RCG	SUBMITTED BY: BAKER
CHK BY: CWW	FILE NO.:

Baker MICHAEL BAKER JR., INC.
Airside Business Park
100 Airside Drive
Moon Township, Pa. 15108
(412) 269-6300

US Army Corps of Engineers
Transatlantic Programs Center

AFGHAN NATIONAL BORDER POLICE
AFGHANISTAN NATIONAL BORDER POLICE UNIT FACILITY
BORDER POLICE COMPANY

BARRACKS (OPEN BAY) ROOF FRAMING PLAN

SHEET REFERENCE NUMBER:

E-S2

READY TO ADVERTISE SUBMISSION

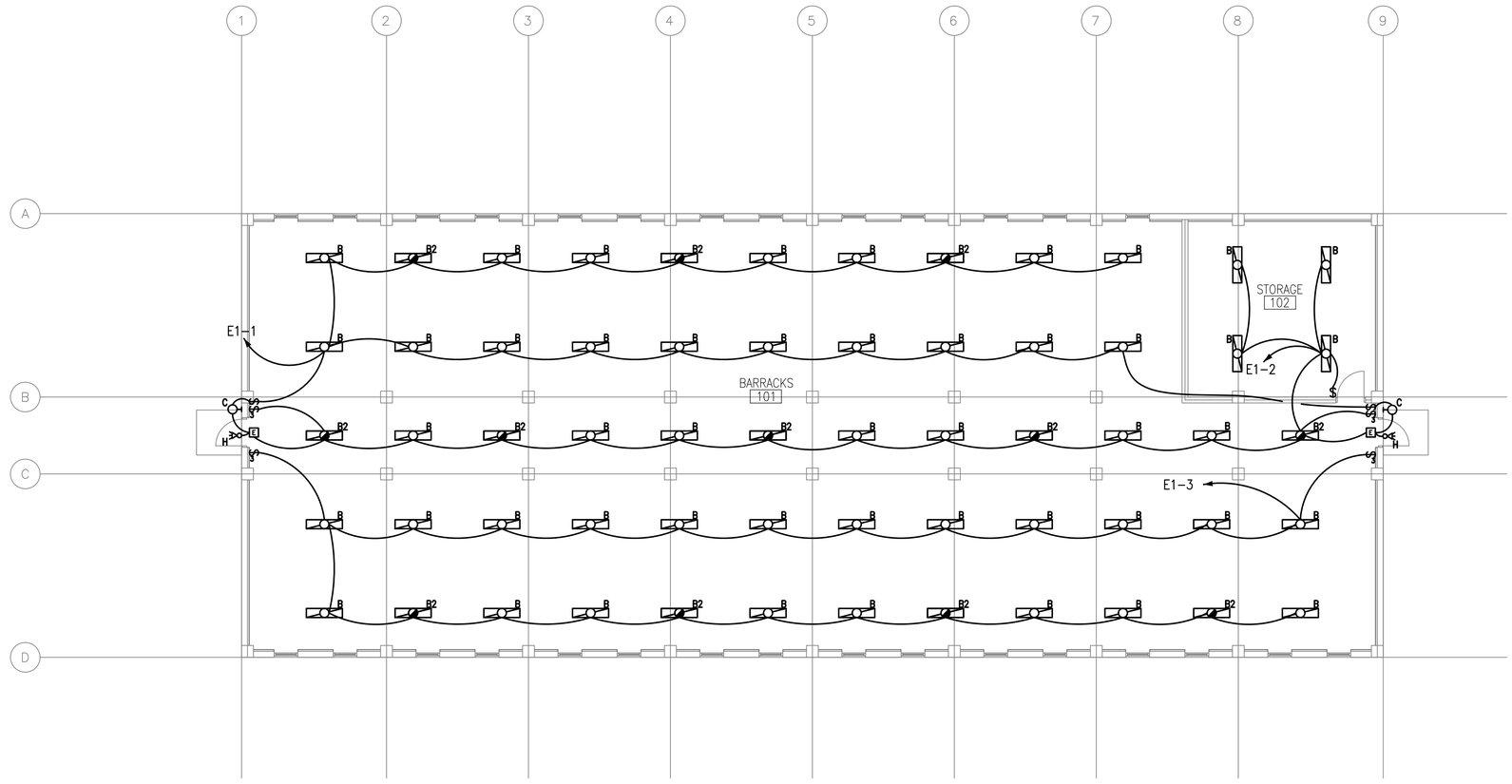

1
E-E1 E-E1

BARRACKS (MIDDLE/ORDINARY) FIRST FLOOR LIGHTING PLAN

SCALE: 1:100

GENERAL NOTE:

1. REFER TO DRAWING #S-E0 FOR ELECTRICAL SYMBOLS LIST.
2. EXIT SIGNS SHALL BE ON UNSWITCHED CIRCUITS.
3. REFER TO DRAWING #S-E1 FOR LIGHTING FIXTURE SCHEDULE.
4. REFER TO DRAWING #R-E1 FOR POWER RISER OF PANELS.
5. REFER TO R-E SERIES DRAWINGS FOR PANEL SCHEDULES.

REGISTERED PROFESSIONAL ENGINEER
JOSEPH R. GAUS
PE-07435

SYMBOL	DESCRIPTION	DATE	APR

DESIGNED BY: ALF
DWN BY: ALF
CHK BY: JRG
DATE: 04-01-08
SUBMITTED BY: BAKER
FILE NO.:

Baker
MICHAEL BAKER JR., INC.
Airside Business Park
100 Airside Drive
Moon Township, Pa. 15108
(412) 269-6300

US Army Corps of Engineers
Transatlantic Programs Center

AFGHAN NATIONAL BORDER POLICE
AFGHANISTAN NATIONAL BORDER POLICE UNIT FACILITY
BORDER POLICE COMPANY

BARRACKS (MIDDLE/ORDINARY)
FIRST FLOOR LIGHTING PLAN

SHEET REFERENCE NUMBER:
E-E1

1 0 1 2 3 4 5 6 7 8 9
1:100

READY TO ADVERTISE SUBMISSION

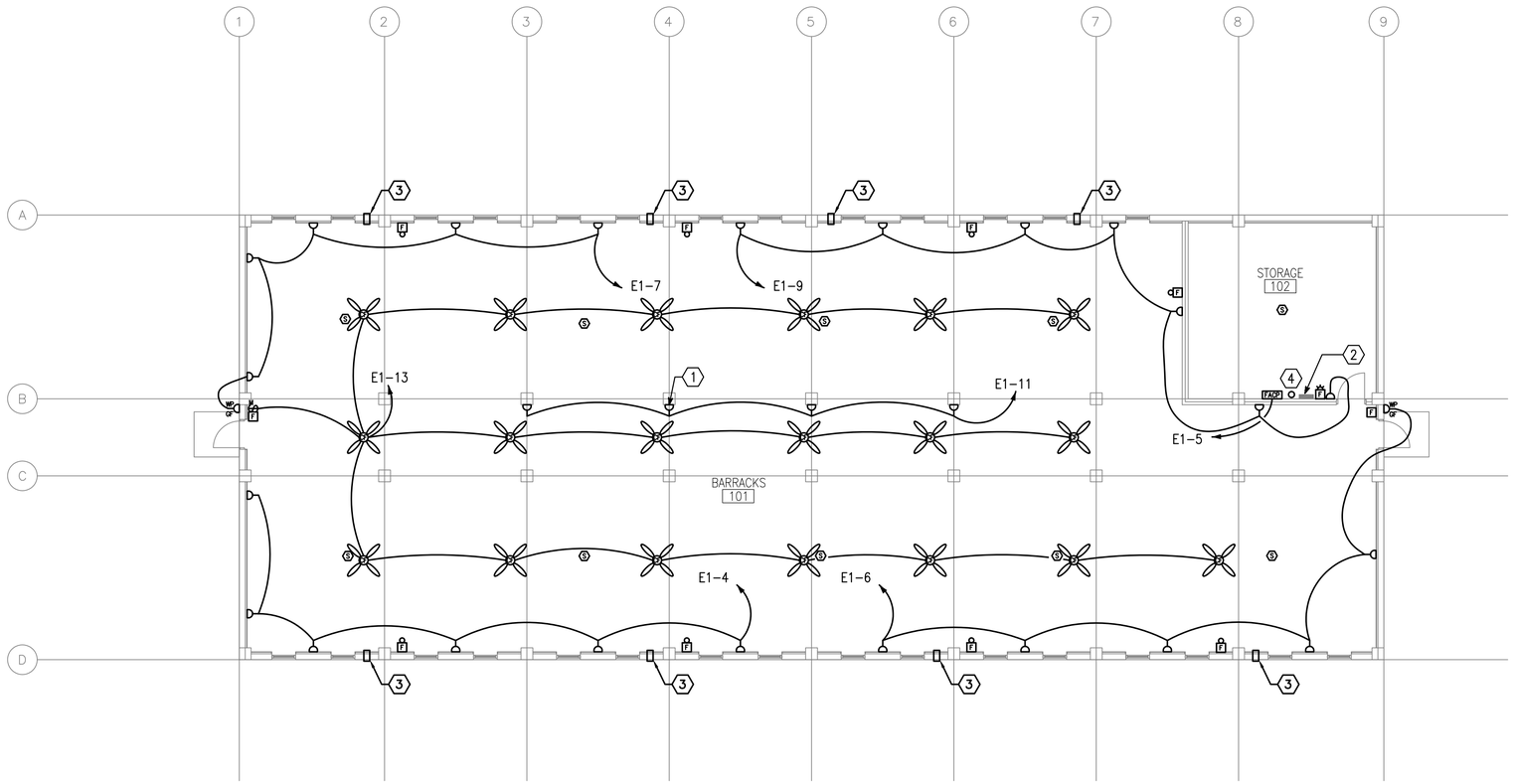

1
E-E2 E-E2

BARRACKS (MIDDLE/ORDINARY) FIRST FLOOR POWER/HVAC PLAN

SCALE: 1:100

GENERAL NOTE:

1. REFER TO DRAWING #S-E0 FOR ELECTRICAL SYMBOLS LIST.
2. EXIT SIGNS SHALL BE ON UNSWITCHED CIRCUITS.
3. REFER TO DRAWING #S-E1 FOR LIGHTING FIXTURE SCHEDULE.
4. REFER TO DRAWING #R-E1 FOR POWER RISER OF PANELS.
5. REFER TO R-E SERIES DRAWINGS FOR PANEL SCHEDULES.
6. ALL MECHANICAL EQUIPMENT & INSTALLATIONS AS INDICATED ON THE DRAWINGS & IN THE SPECIFICATIONS SHALL BE THE RESPONSIBILITY OF THE ELECTRICAL CONTRACTOR.

NUMBERED NOTE:

1. SURFACE MOUNTED ON COLUMN (TYPICAL OF 4).
2. PANEL 'E1'
3. 100mm SLEEVE THROUGH WALL WITH CAP FOR FUTURE WOOD BURNING STOVE. STOVE IS BY OTHERS. SLEEVE SHALL BE MOUNTED 2M AFF. SLEEVE INSTALLATION IS THE RESPONSIBILITY OF THE ELECTRICAL CONTRACTOR.
4. TELECOMMUNICATIONS CONDUIT STUB-UP

COMMONWEALTH OF PENNSYLVANIA
REGISTERED PROFESSIONAL ENGINEER
JOSEPH R. GAUS
PE-074251

SYMBOL	DESCRIPTION	DATE	APR

DESIGNED BY: ALF
DWN BY: ALF
CHK BY: JRG
DATE: 04-01-08
SUBMITTED BY: JRG
FILE NO.: ------

Baker
MICHAEL BAKER JR., INC.
Airside Business Park
100 Airside Drive
Moon Township, Pa. 15108
(412) 269-6300

US Army Corps of Engineers
Transatlantic Programs Center

AFGHAN NATIONAL BORDER POLICE
AFGHANISTAN NATIONAL BORDER POLICE UNIT FACILITY
BORDER POLICE COMPANY
BARRACKS (MIDDLE/ORDINARY) FIRST FLOOR POWER PLAN

SHEET REFERENCE NUMBER:
E-E2

1 0 1 2 3 4 5 6 7 8 9
1:100

READY TO ADVERTISE SUBMISSION

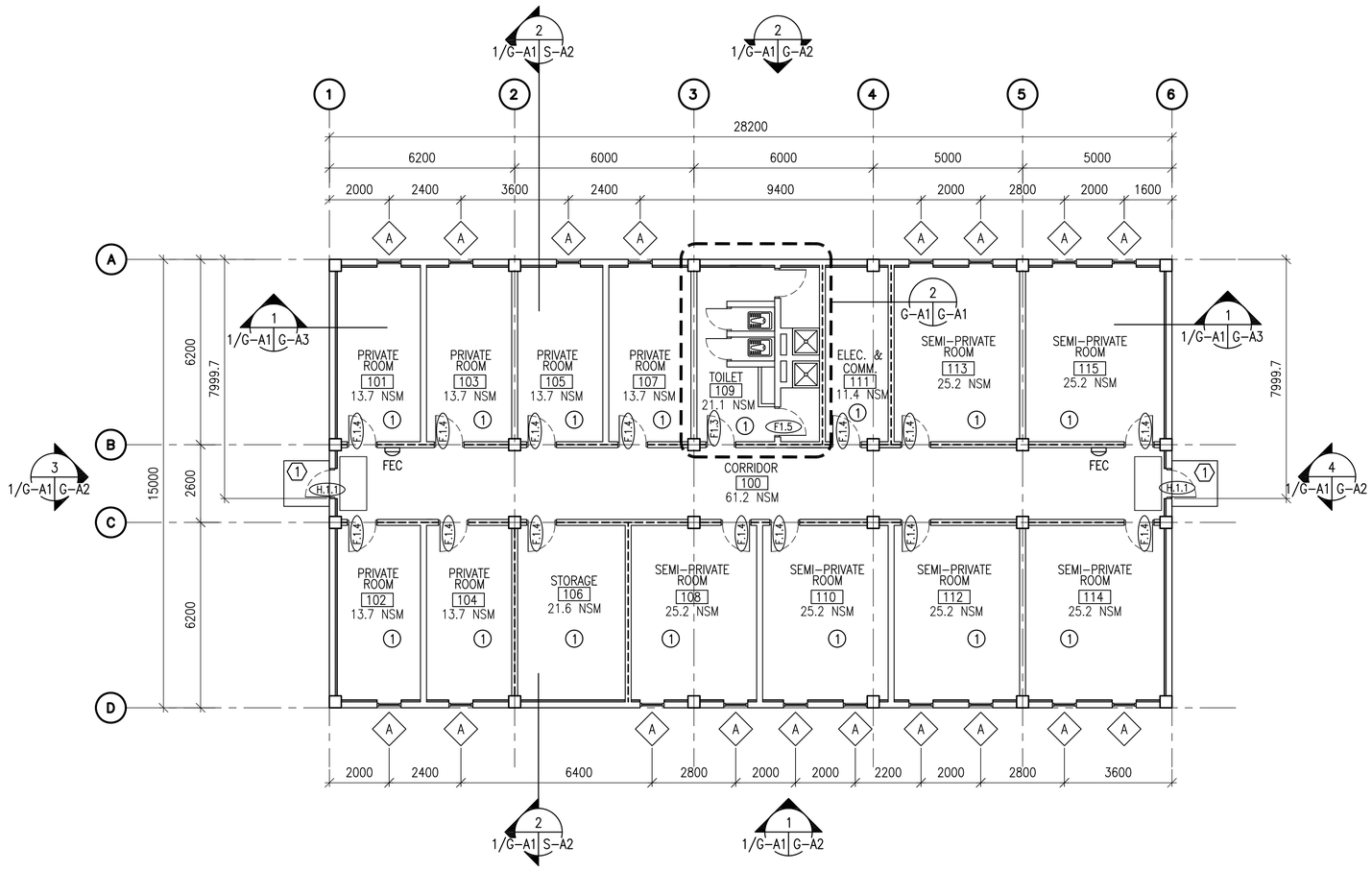

1 G-A1 | G-A1 BARRACKS (SR-HIGH) FLOOR PLAN

SCALE: 1:100

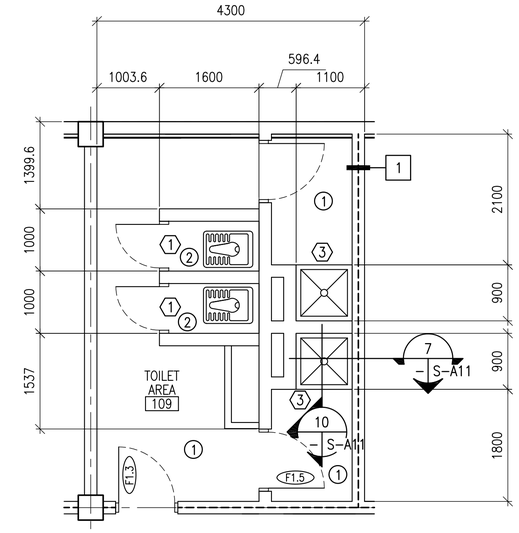

2 G-A1 | G-A1 ENLARGED TOILET PLAN

SCALE: 1:50

FLOOR PLAN NOTES:

1. ALL INTERIOR PARTITIONS SHALL BE TYPE 1 UNLESS NOTED OTHERWISE
2. OPENINGS FOR DOORS SHALL BE LOCATED 200 MM FROM THE ADJACENT WALL UNLESS NOTED OTHERWISE
3. SURFACES TO BE PAINTED SHALL BE CLEAN AND FREE OF FOREIGN MATTER BEFORE APPLICATION OF PAINT. CLEANING SHALL BE SCHEDULED SO THAT DUST AND OTHER CONTAMINANTS WILL NOT FALL ON WET, NEWLY PAINTED SURFACES.
4. CONCRETE AND INTERIOR MASONRY SURFACES GROUTED SOLID SHALL BE ALLOWED TO DRY AT LEAST 30 DAYS BEFORE PAINTING EXCEPT CONCRETE SLAB ON GRADE WHICH SHALL BE ALLOWED TO CURE 90 DAYS BEFORE PAINTING.
5. PAINTS CONTAINING LEAD IN EXCESS OF 0.06 PERCENT BY WEIGHT OF THE TOTAL NONVOLATILE CONTENT SHALL NOT BE USED.
6. MERCURIAL FUNGICIDES SHALL NOT BE USED IN OIL-BASE PAINT.
7. REMOVE LOOSE DIRT AND CLEAN SURFACES BEFORE PAINTING. APPLY PAINT TO INTERIOR STRUCTURAL RIGID FRAMINGS AND CEILINGS AND TEST FOR ADHESION. PRIMER COAT FOR MASONRY. INITIAL FIRST COAT WITH AN ACRYLIC LATEX PAINT FOR EXTERIOR SURFACES AND A SECOND COAT WITH A WATER REPELLENT ACRYLIC LATEX PAINT.
8. INTERIOR METAL DOORS AND FRAMES SHALL RECEIVE A PRIMER COAT PLUS TWO COATS OF PAINT.
9. DIMENSIONS ARE TO CENTERLINE OF WINDOW OPENINGS, AND TO HINGE SIDE OF DOOR OPENINGS.
10. INSTALL SHOWER CURTAIN FOR ALL SHOWERS.
11. PROVIDE CERAMIC TILE AT ALL SHOWER STALLS AND SHOWER SURROUNDS.
12. SEE ELECTRICAL FOR STOVE SLEEVE LOCATIONS

KEY NOTES: (X)

1. TYPICAL TOLIET STALL LAYOUT – RE: DETAIL 6/S-A10
2. CONCRETE STOOP – RE: DETAIL 1/S-A13
3. SHOWER CURTAIN (TYP)

LEGEND:

- (A) DOOR TYPE, SEE SHEET S-A8
- [A] PARTITION TYPE, SEE SHEET S-A3
- (A) WINDOW TYPE, SEE SHEET S-A8
- (X) KEY NOTE
- FEC FIRE EXTINGUISHER CABINET
- 1 HR. RATED FIRE WALL
- (1) ROOM FINISH TYPE, SEE SHEET S-A8
- RUBBER ENTRANCE MAT (900x1800)

UNLESS OTHERWISE NOTED, LINEAR DIMENSIONS SHOWN ARE IN MILLIMETERS (MM)

1 0 1 2 3 4
1:50

1 0 1 2 3 4 5 6 7 8 9
1:100

SOUTH CAROLINA STATE REGISTERED ARCHITECT
KEVIN R. CHAFIN
N. Charleston, SC
6374

SYMBOL	DESCRIPTION	DATE	APR

DESIGNED BY: BAKER
DATE: 04-01-08
DWN BY: KJG
SUBMITTED BY: BAKER
CHK BY: KRC
FILE NO.:

Baker
MICHAEL BAKER JR., INC.
Airside Business Park
100 Airside Drive
Moon Township, Pa. 15108
(412) 269-6300

US Army Corps of Engineers
Transatlantic Programs Center

AFGHAN NATIONAL BORDER POLICE
AFGHANISTAN NATIONAL BORDER POLICE UNIT FACILITY
BORDER POLICE COMPANY
BARRACKS (SR-HIGH)
FLOOR PLAN

SHEET REFERENCE NUMBER:
G-A1

READY TO ADVERTISE SUBMISSION

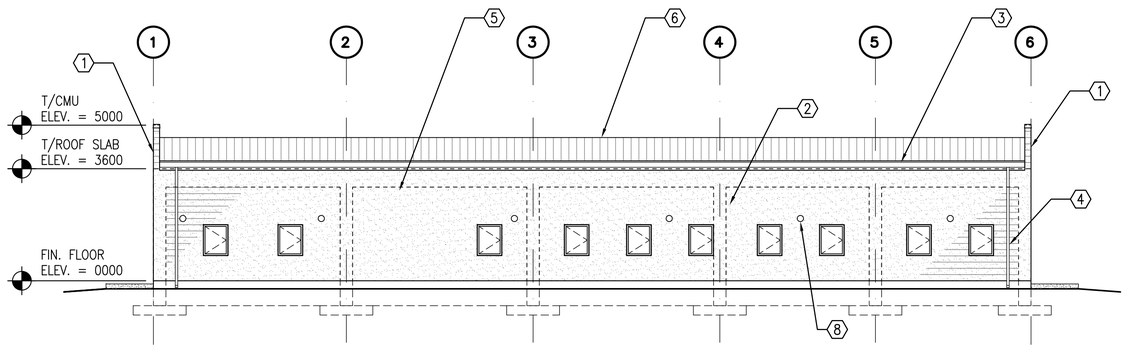

1 G-A1 G-A2 BARRACKS (SR-HIGH) ELEVATION
SCALE: 1:100

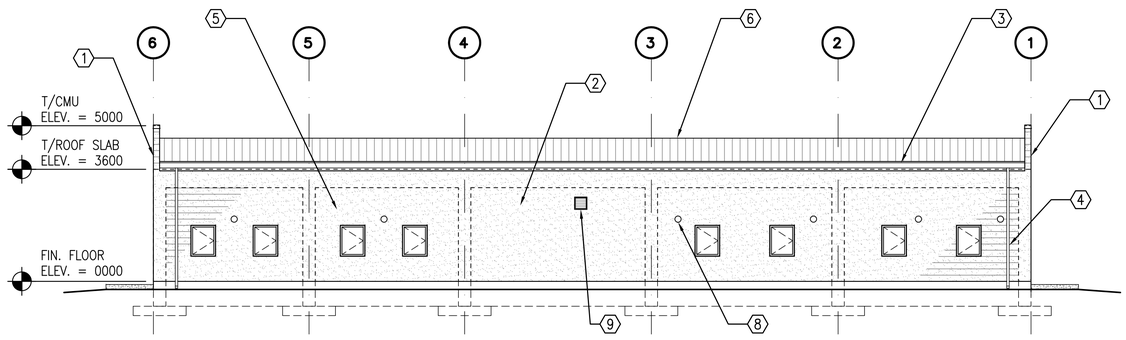

2 G-A1 G-A2 BARRACKS (SR-HIGH) ELEVATION
SCALE: 1:100

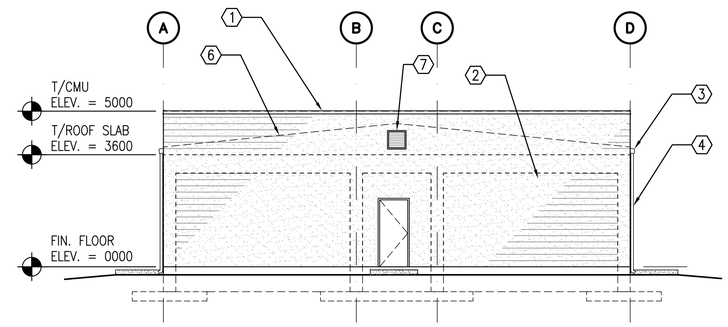

3 G-A1 G-A2 BARRACKS (SR-HIGH) ELEVATION
SCALE: 1:100

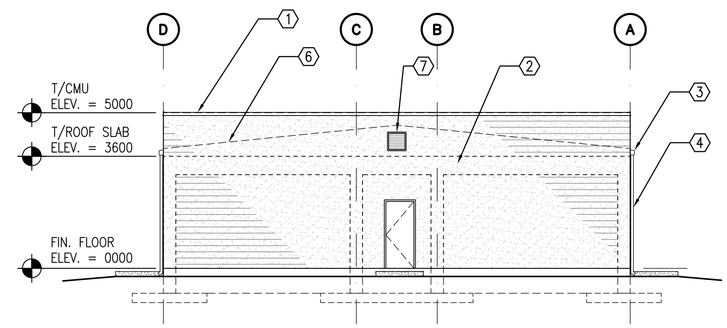

4 G-A1 G-A2 BARRACKS (SR-HIGH) ELEVATION
SCALE: 1:100

KEY NOTES:

1. EXTERIOR CONCRETE WALL W/ STUCCO FINISH AND PARAPET CAP
2. STUCCO ON CMU
3. METAL GUTTER
4. METAL DOWNSPOUT WITH SPLASH BLOCK
5. STUCCO CONTROL JOINT ALIGNED WITH CMU CONTROL JOINT
6. CORRUGATED METAL ROOF
7. 600x600 LOUVER
8. WOOD STOVE SLEEVE – SEE ELECTRICAL
9. WALL MOUNTED EXHAUST VENT – SEE ELECTRICAL

GENERAL NOTES:

1. COORDINATE SIZE AND LOCATION OF OPENINGS FOR MECHANICAL ITEMS WITH MECHANICAL DRAWINGS.
2. PROVIDE STRUCTURAL LINTELS AS REQUIRED – RE: STRUCT

UNLESS OTHERWISE NOTED, LINEAR DIMENSIONS SHOWN ARE IN MILLIMETERS (MM)

1 0 1 2 3 4 5 6 7 8 9
1:100

SOUTH CAROLINA STATE OF REGISTERED ARCHITECT
KEVIN R. CHAFIN
N. Charleston, SC
6374

SYMBOL	DESCRIPTION	DATE	APR

DESIGNED BY: BAKER
DATE: 04-01-08
DWN BY: KJG
SUBMITTED BY: BAKER
CHK BY: KRC
FILE NO.:

Baker
MICHAEL BAKER JR., INC.
Airside Business Park
100 Airside Drive
Moon Township, Pa. 15108
(412) 269-6300

US Army Corps of Engineers
Transatlantic Programs Center

AFGHAN NATIONAL BORDER POLICE
AFGHANISTAN NATIONAL BORDER POLICE UNIT FACILITY
BORDER POLICE COMPANY
BARRACKS (SR-HIGH) ELEVATIONS

SHEET REFERENCE NUMBER:
G-A2

READY TO ADVERTISE SUBMISSION

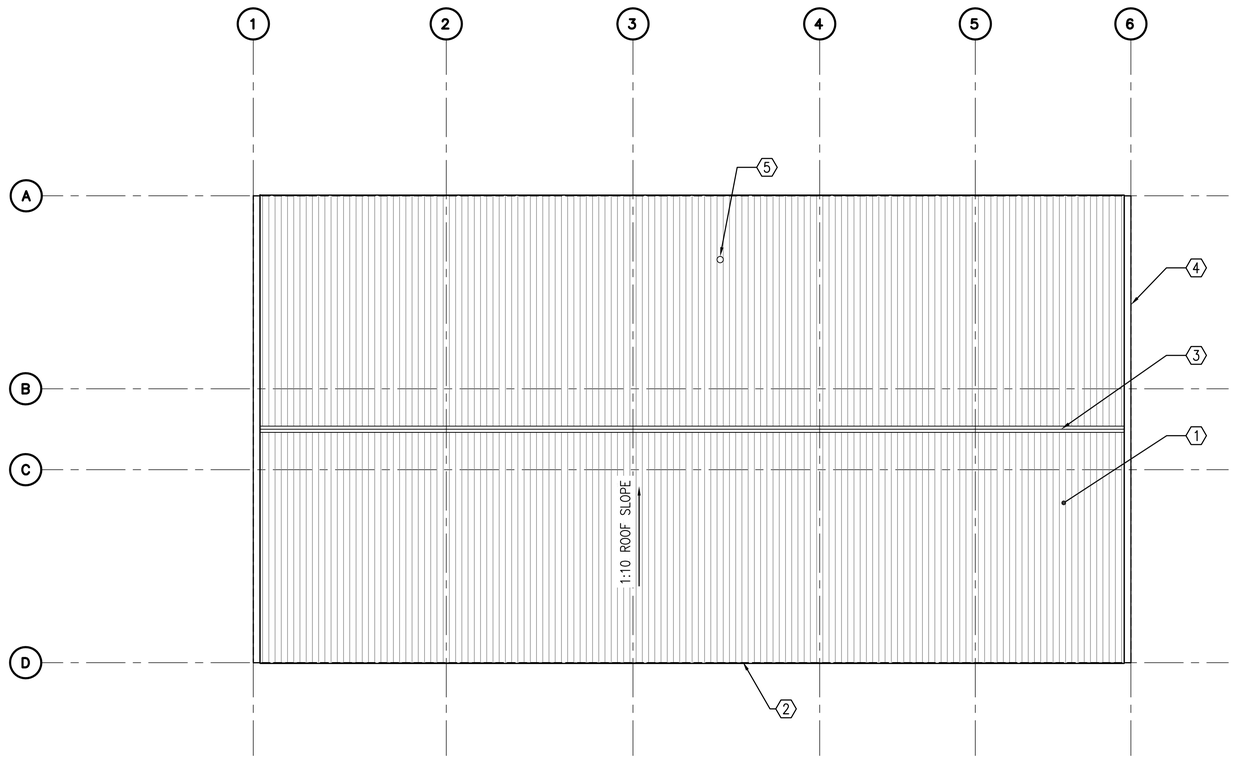

BARRACKS (SR-HIGH) ROOF PLAN

1 G-A3 | G-A3 SCALE: 1:100

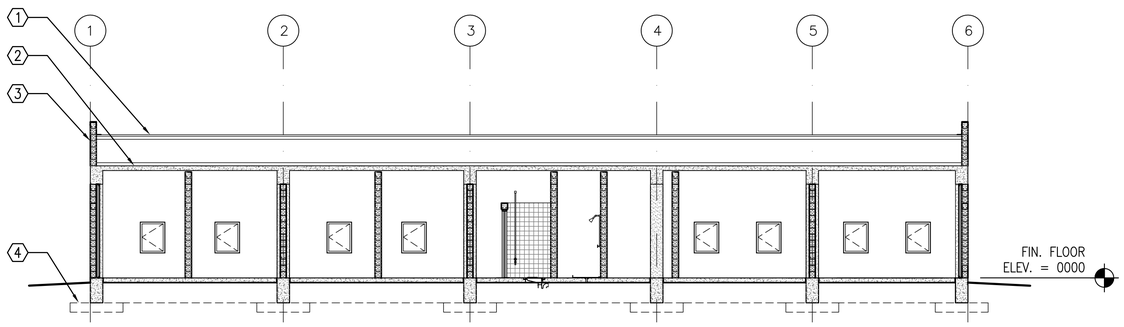

BARRACKS (SR-HIGH) BUILDING SECTION

2 G-A3 | G-A3 SCALE: 1:100

KEY NOTES:

1. CORRUGATED METAL ROOF
2. LINE OF BUILDING BELOW
3. RIDGE
4. PARAPET WALL W/ CAP
5. ROOF PENETRATION–RE: DETAIL 8/S–A13

KEY NOTES:

1. CORRUGATED METAL ROOF
2. CONCRETE SLAB
3. PARAPET WALL W/ CAP
4. SEE STRUCTURAL FOR FOUNDATION

UNLESS OTHERWISE NOTED, LINEAR DIMENSIONS SHOWN ARE IN MILLIMETERS (MM)

1 0 1 2 3 4 5 6 7 8 9
1:100

SOUTH CAROLINA STATE REGISTERED ARCHITECT
KEVIN R. CHAFIN
N. Charleston, SC
6374

SYMBOL	DESCRIPTION	DATE	APR

DESIGNED BY: BAKER
DWN BY: KJG
CHK BY: KRC
DATE: 04–01–08
SUBMITTED BY: BAKER
FILE NO.:

Baker
MICHAEL BAKER JR., INC.
Airside Business Park
100 Airside Drive
Moon Township, Pa. 15108
(412) 269-6300

US Army Corps of Engineers
Transatlantic Programs Center

AFGHAN NATIONAL BORDER POLICE
AFGHANISTAN NATIONAL BORDER POLICE UNIT FACILITY
BORDER POLICE COMPANY
BARRACKS (SR-HIGH)
ROOF PLAN & BUILDING SECTION

SHEET REFERENCE NUMBER:
G-A3

READY TO ADVERTISE SUBMISSION

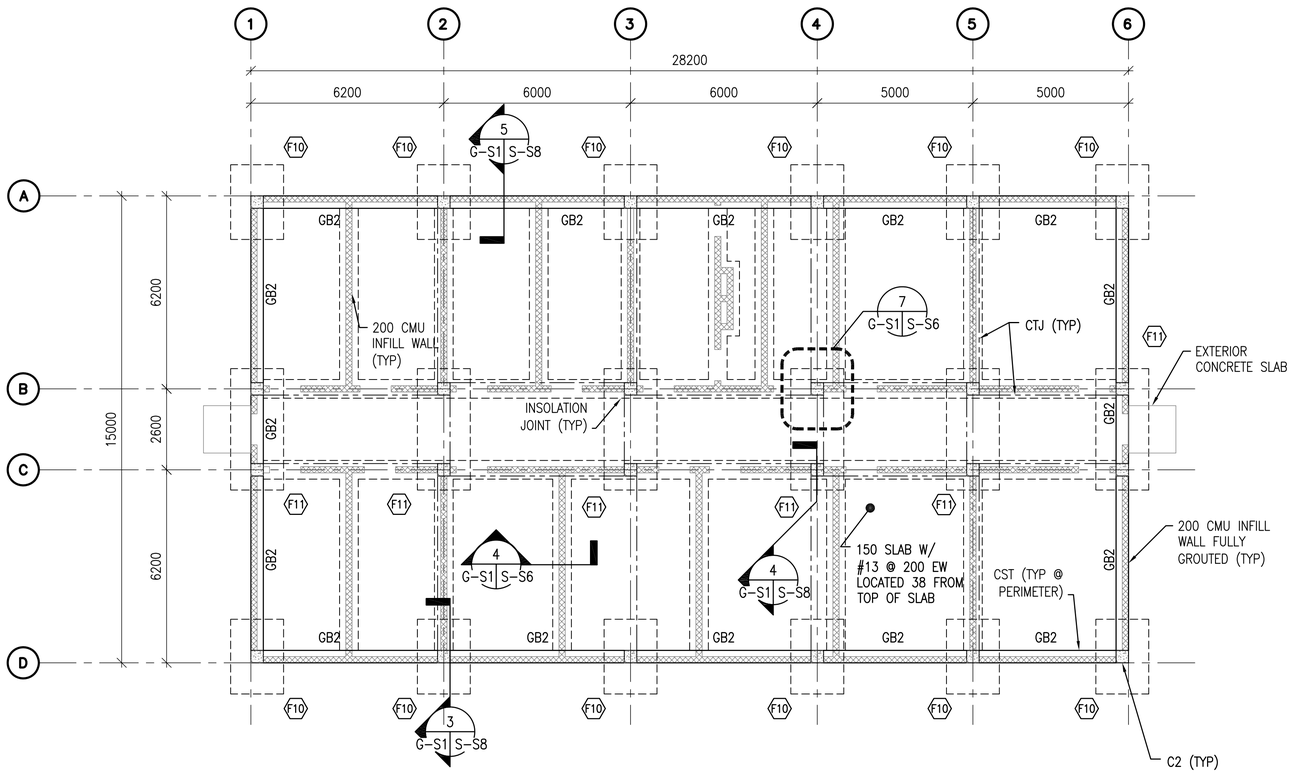

1 G-S1 G-S1 BARRACKS (SR-HIGH) FOUNDATION PLAN

SCALE: 1:100

PLAN NOTES:

1. FINISH FIRST FLOOR ELEVATION SHALL BE (DATUM 0.0) ALL PLUS OR MINUS DIMENSIONS INDICATED ON PLAN OR REFERRED TO IN NOTES RELATE TO FINISH FIRST FLOOR ELEVATION.
2. TOP OF EXTERIOR FOOTINGS SHALL BE –500 UNLESS OTHERWISE INDICATED.
3. TOP OF INTERIOR FOOTING SHALL BE –400 UNLESS OTHERWISE INDICATED.
4. SPREAD FOOTINGS INDICATED BY F# ON PLAN. REFER TO SPREAD FOOTING SCHEDULE ON DRAWING S–S4.
5. COLUMNS INDICATED BY C# ON PLAN. REFER TO COLUMN SCHEDULE ON DRAWINGS S–S4.
6. GRADE BEAM INDICATED BY GB# ON PLAN. REFER TO BEAM SCHEDULE ON DRAWING S–S4
7. REFER TO DRAWINGS S–S1 TO S–S2 FOR STRUCTURAL NOTES AND BASIS OF DESIGN.
8. CTJ & CSJ INDICATES SLAB CONTROL OR CONSTRUCTION JOINTS RESPECTIVELY. REFER TO DRAWING S–S5 FOR DETAILS.
9. SEE CMU WALL REINFORCING SCHEDULE ON DRAWING S–S4.
10. REFER TO ARCHITECTURAL DRAWINGS FOR MASONRY PARTITION TYPES.
11. SEE MECHANICAL AND ELECTRICAL DWGS. FOR CONCRETE PAD LOCATIONS, SIZES, AND THICKNESS NOT SHOWN. SEE DWG. S–S5 FOR DETAILS.

UNLESS OTHERWISE NOTED, LINEAR DIMENSIONS SHOWN ARE IN MILLIMETERS (MM)

1 0 1 2 3 4 5 6 7 8 9
1:100

GEORGIA REGISTERED No. 27141 PROFESSIONAL ENGINEER CHRISTOPHER W. WILLMORE

SYMBOL	DESCRIPTION	DATE	APR

DESIGNED BY: BAKER	DATE: 04–01–08	
DWN BY: RCG	SUBMITTED BY: BAKER	
CHK BY: CWW	FILE NO.:	

Baker MICHAEL BAKER JR., INC.
Airside Business Park
100 Airside Drive
Moon Township, Pa. 15108
(412) 269–6300

US Army Corps of Engineers
Transatlantic Programs Center

AFGHAN NATIONAL BORDER POLICE
AFGHANISTAN NATIONAL BORDER POLICE UNIT FACILITY
BORDER POLICE COMPANY
BARRACKS (SR-HIGH) FOUNDATION PLAN

SHEET REFERENCE NUMBER:
G-S1

READY TO ADVERTISE SUBMISSION

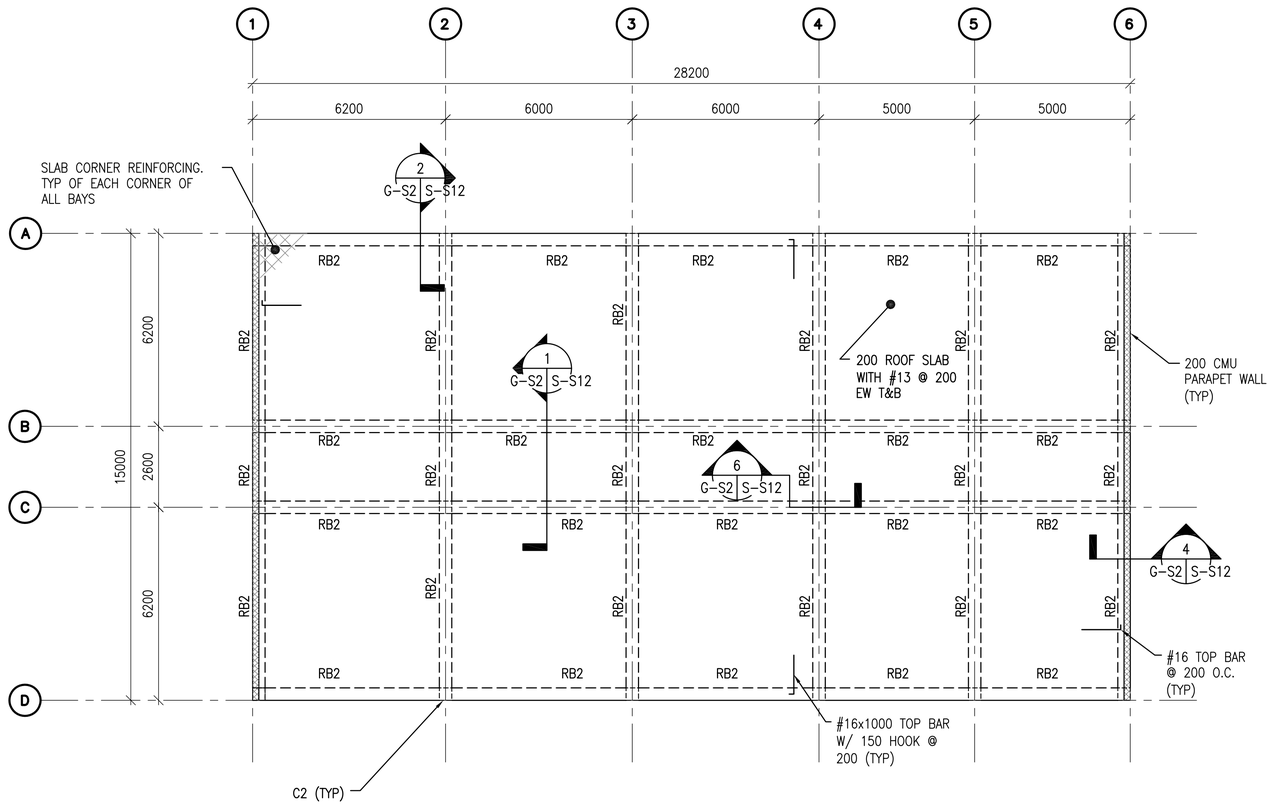

BARRACKS (SR-HIGH) ROOF FRAMING PLAN

1 G-S2 | G-S2 SCALE: 1:100

PLAN NOTES:

1. FINISH FIRST FLOOR ELEVATION SHALL BE (DATUM 0.0) ALL PLUS OR MINUS DIMENSIONS INDICATED ON PLAN OR REFERRED TO IN NOTES RELATE TO FINISH FIRST FLOOR ELEVATION.
2. TOP OF EXTERIOR FOOTINGS SHALL BE −500 UNLESS OTHERWISE INDICATED.
3. TOP OF INTERIOR FOOTING SHALL BE −400 UNLESS OTHERWISE INDICATED.
4. COLUMNS INDICATED BY C# ON PLAN. REFER TO COLUMN SCHEDULE ON DRAWINGS S−S4.
5. RB# DENOTES ROOF BEAM TYPE. SEE BEAM SCHEDULE ON DRAWING S−S4.
6. REFER TO DRAWINGS S−S1 AND S−S2 FOR STRUCTURAL NOTES AND BASIS OF DESIGN.
7. REFER TO ARCHITECTURAL DRAWINGS FOR MASONRY PARTITION TYPES.
8. REFERENCE ARCHITECTURAL DRAWINGS FOR COLD−FORMED STEEL OVERFRAMING ABOVE ROOF SLAB

UNLESS OTHERWISE NOTED, LINEAR DIMENSIONS SHOWN ARE IN MILLIMETERS (MM)

1 0 1 2 3 4 5 6 7 8 9
1:100

GEORGIA REGISTERED No. 27141 PROFESSIONAL ENGINEER CHRISTOPHER W. WILLMORE

SYMBOL	DESCRIPTION	DATE	APR

DESIGNED BY: BAKER	DATE: 04−01−08		
DWN BY: RCG	SUBMITTED BY: BAKER		
CHK BY: CWW	FILE NO.:		

Baker
MICHAEL BAKER JR, INC.
Airside Business Park
100 Airside Drive
Moon Township, Pa. 15108
(412) 269−6300

US Army Corps of Engineers
Transatlantic Programs Center

AFGHAN NATIONAL BORDER POLICE
AFGHANISTAN NATIONAL BORDER POLICE UNIT FACILITY
BORDER POLICE COMPANY

BARRACKS (SR-HIGH) FOUNDATION PLAN

SHEET REFERENCE NUMBER:
G-S2

READY TO ADVERTISE SUBMISSION

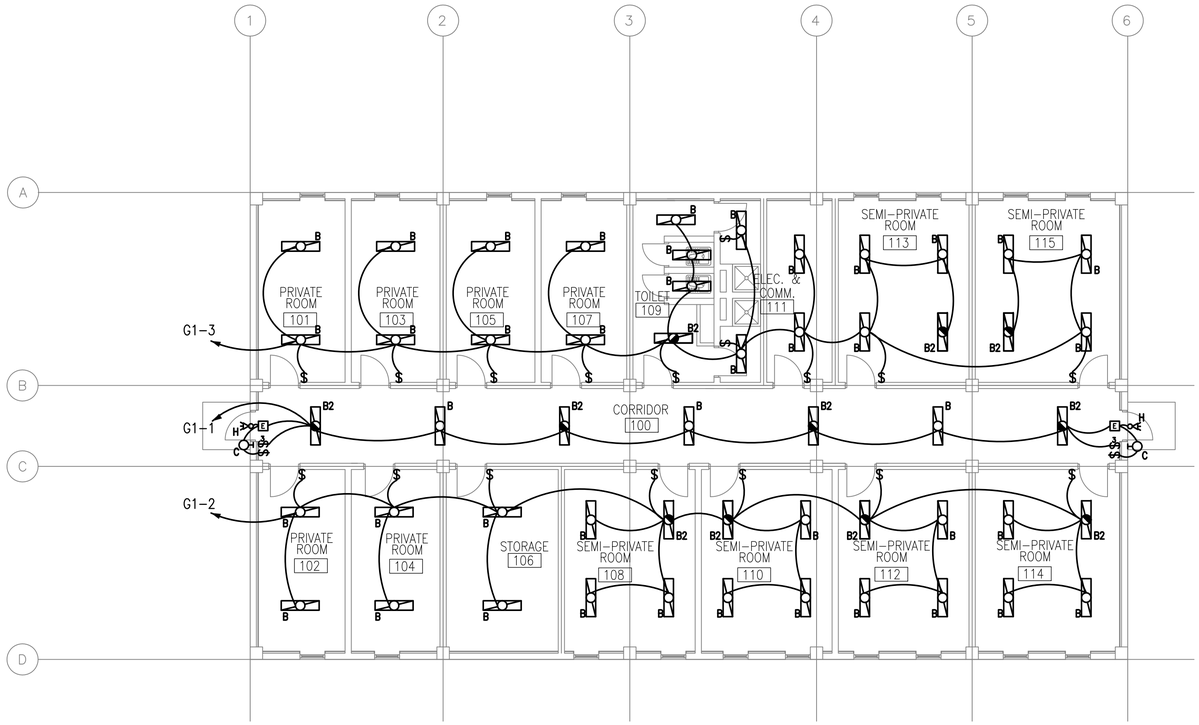

1 G-E1 G-E1

BARRACKS (SENIOR/HIGH) FIRST FLOOR LIGHTING PLAN

SCALE: 1:100

GENERAL NOTE:

1. REFER TO DRAWING #S-E0 FOR ELECTRICAL SYMBOLS LIST.
2. EXIT SIGNS SHALL BE ON UNSWITCHED CIRCUITS.
3. REFER TO DRAWING #S-E1 FOR LIGHTING FIXTURE SCHEDULE.
4. REFER TO DRAWING #R-E1 FOR POWER RISER OF PANELS.
5. REFER TO R-E SERIES DRAWINGS FOR PANEL SCHEDULES.

REGISTERED PROFESSIONAL ENGINEER JOSEPH R. GAUS PE-07435

SYMBOL	DESCRIPTION	DATE	APR

DESIGNED BY: ALF
DWN BY: ALF
CHK BY: JRG
DATE: 04-01-08
SUBMITTED BY: BAKER
FILE NO.:

Baker
MICHAEL BAKER JR., INC.
Airside Business Park
100 Airside Drive
Moon Township, Pa. 15108
(412) 269-6300

US Army Corps of Engineers
Transatlantic Programs Center

AFGHAN NATIONAL BORDER POLICE
AFGHANISTAN NATIONAL BORDER POLICE UNIT FACILITY
BORDER POLICE COMPANY

BARRACKS (SENIOR/HIGH)
FIRST FLOOR LIGHTING PLAN

SHEET REFERENCE NUMBER:
G-E1

1 0 1 2 3 4 5 6 7 8 9
1:100

READY TO ADVERTISE SUBMISSION

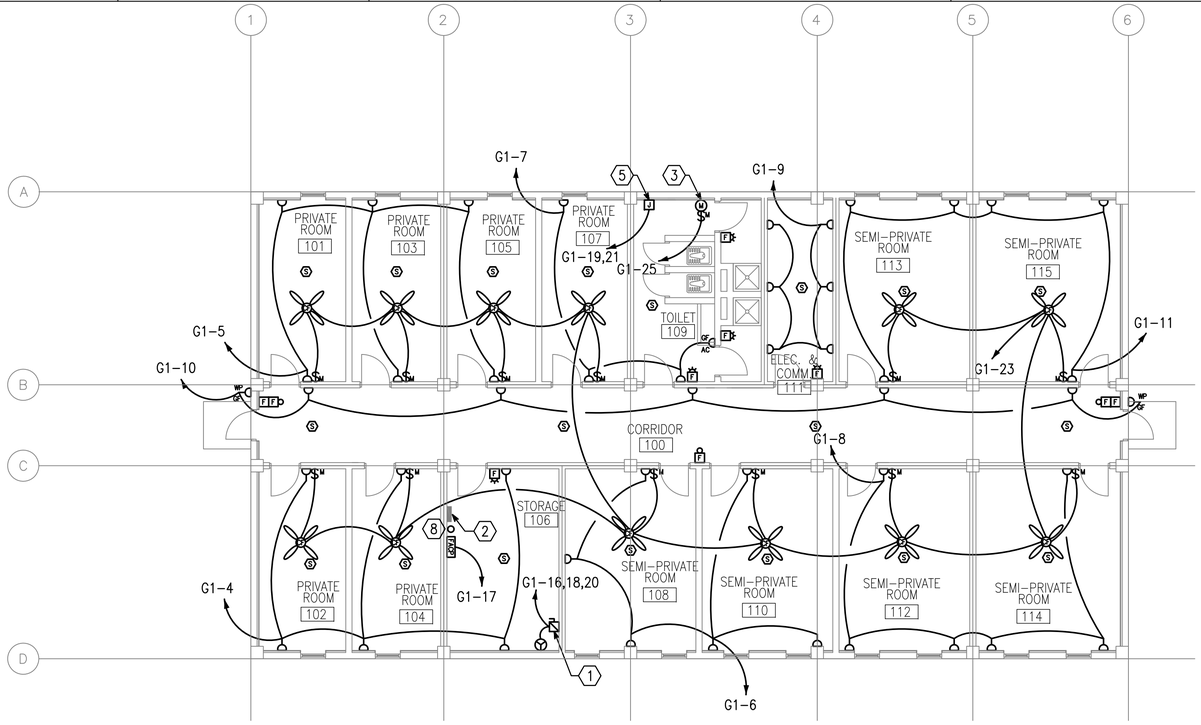

1
G-E2 G-E2

BARRACKS (SENIOR/HIGH) FIRST FLOOR POWER PLAN

SCALE: 1:100

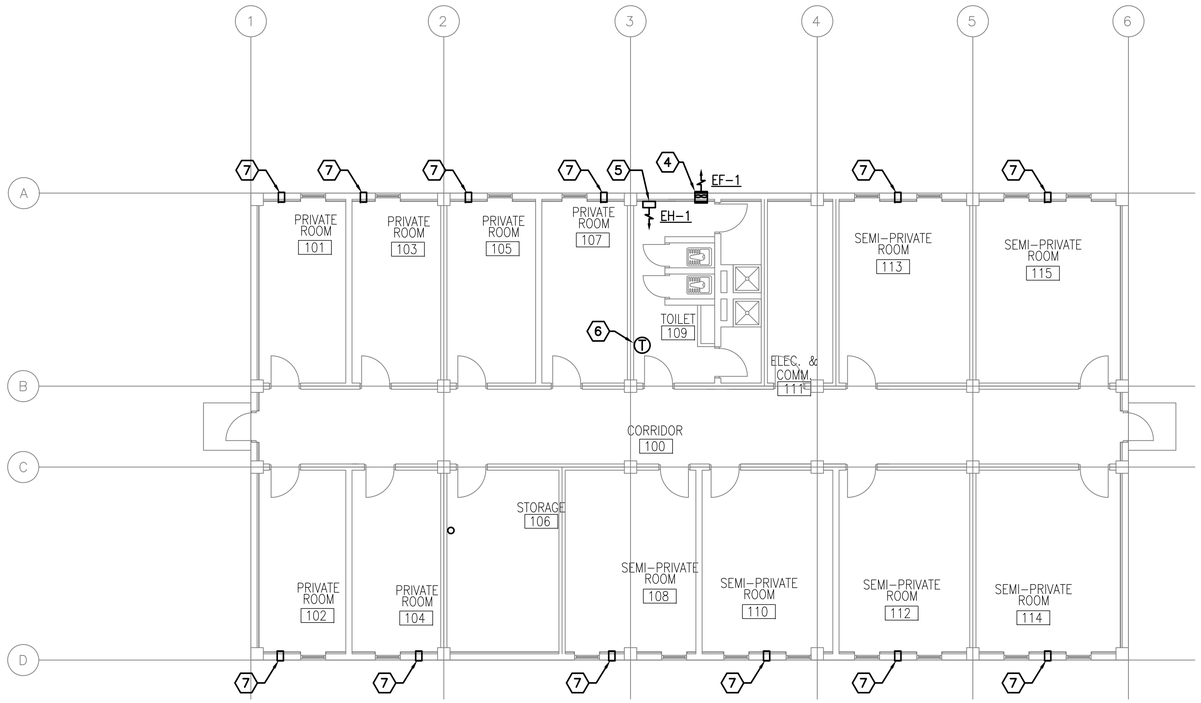

2
G-E2 G-E2

BARRACKS (SENIOR/HIGH) FIRST FLOOR HVAC PLAN

SCALE: 1:100

EXHAUST FAN SCHEDULE

NO.	TYPE	FAN CMS	DRIVE	HP	ELECT. CHAR.	SWITCH
EF-1	WALL	0.100	DIRECT	FRACT	220/1/50	W/ LIGHTS

ELECTRIC UNIT HEATER SCHEDULE

NO.	CMS	KW	F.A.T. °C	ELECT. CHAR.	MOUNTING
EH-1	.193	3	33	370/1/50	CEILING HUNG

GENERAL NOTE:

1. REFER TO DRAWING #S-E0 FOR ELECTRICAL SYMBOLS LIST.
2. EXIT SIGNS SHALL BE ON UNSWITCHED CIRCUITS.
3. REFER TO DRAWING #S-E1 FOR LIGHTING FIXTURE SCHEDULE.
4. REFER TO DRAWING #R-E1 FOR POWER RISER OF PANELS.
5. REFER TO R-E SERIES DRAWINGS FOR PANEL SCHEDULES.
6. ALL MECHANICAL EQUIPMENT & INSTALLATIONS AS INDICATED ON THE DRAWINGS & IN THE SPECIFICATIONS SHALL BE THE RESPONSIBILITY OF THE ELECTRICAL CONTRACTOR.

NUMBERED NOTE:

1. NEMA 1, 380V, 3P, 60A FUSED DISCONNECT FUSED AT 50A.
2. PANEL 'G1'
3. EXHAUST FAN
4. WALL MOUNTED EXHAUST FAN.
5. ELECTRIC UNIT HEATER SUSPENDED FROM STRUCTURE ABOVE.
6. THERMOSTAT MOUNTED AT 1.5M AFF. MOUNT AT 300mm BELOW CEILING.
7. 100mm SLEEVE THROUGH WALL WITH CAP FOR FUTURE WOOD BURNING STOVE. STOVE IS BY OTHERS. SLEEVE SHALL BE MOUNTED 2M AFF.
8. TELECOMMUNICATIONS CONDUIT STUB-UP

1 0 1 2 3 4 5 6 7 8 9
1:100

SYMBOL	DESCRIPTION	DATE	APR

DESIGNED BY: ALF | DATE: 04-01-08
DWN BY: ALF | SUBMITTED BY: BAKER
CHK BY: JRG | FILE NO.:

Baker
MICHAEL BAKER JR., INC.
Airside Business Park
100 Airside Drive
Moon Township, Pa. 15108
(412) 269-6300

US Army Corps of Engineers
Transatlantic Programs Center

AFGHAN NATIONAL BORDER POLICE
AFGHANISTAN NATIONAL BORDER POLICE UNIT FACILITY
BORDER POLICE COMPANY
BARRACKS (SENIOR/HIGH)
FIRST FLOOR POWER PLAN

SHEET REFERENCE NUMBER:
G-E2

READY TO ADVERTISE SUBMISSION

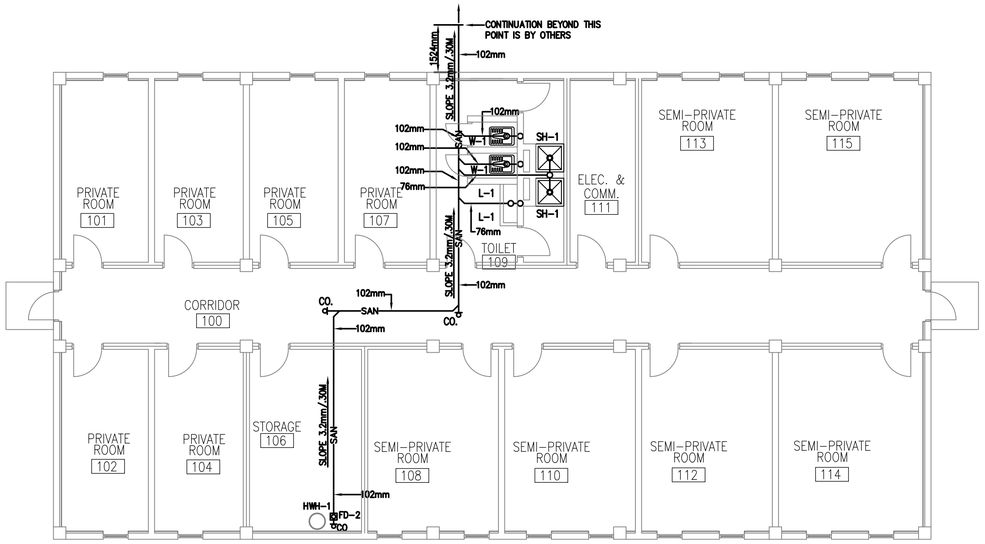

SENIOR AND HIGH BARRACKS FIRST FLOOR PLAN - PLUMBING (SANITARY)

1 / G-P1 | G-P1 SCALE: 1:100

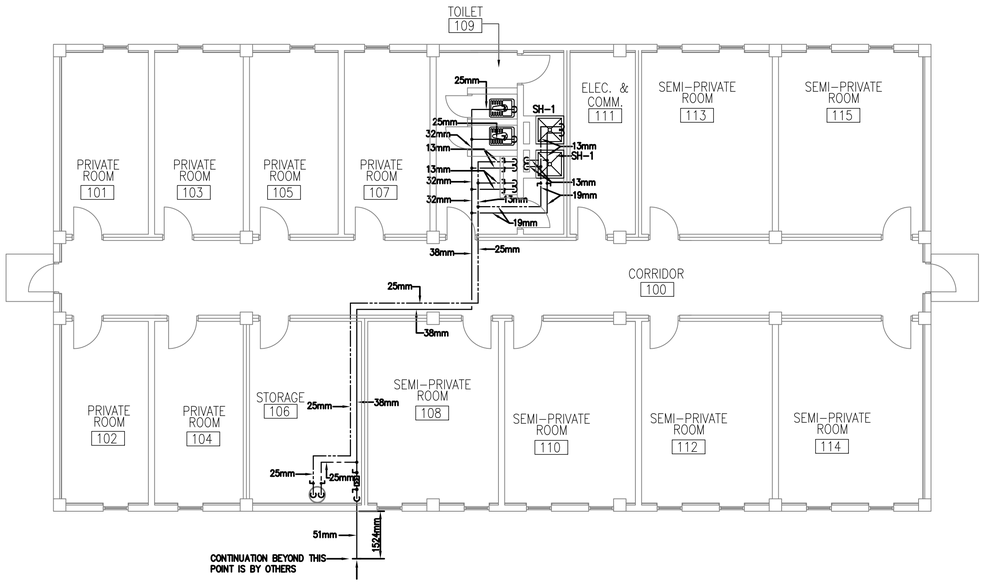

SENIOR AND HIGH BARRACKS FIRST FLOOR PLAN - PLUMBING (WATER)

2 / G-P1 | G-P1 SCALE: 1:100

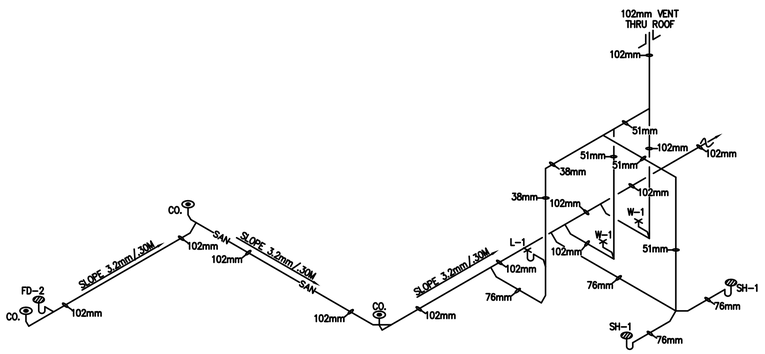

SENIOR AND HIGH BARRACKS DRAINAGE ISOMETRIC

3 / G-P1 | G-P1 SCALE: N.T.S.

FLOOR PLAN NOTES:

1. DO NOT SCALE DRAWINGS – ALL DIMENSIONS AND CONDITIONS SHALL BE CHECKED AND VERIFIED BY THE CONTRACTOR AT THE SITE.
2. ALL WORK PERFORMED ON THIS BUILDING SHALL BE IN COMPLIANCE WITH ALL PERTINENT CODES, RULES, ORDINANCES AND REGULATIONS OF THE GOVERNING AUTHORITIES.
3. ALL WORK PERFORMED UNDER AND IN CONNECTION WITH THESE DRAWINGS AND SPECIFICATIONS SHALL BE IN STRICT COMPLIANCE WITH THE LATEST SAFETY AND HEALTH STANDARDS.
4. REPORT ANY DISCREPANCIES FOUND IN THE PLUMBING DRAWINGS AND/OR IN THE SPECIFICATIONS DURING THE BIDDING PROCESS FOR CLARIFICATION BY THE ENGINEER.
5. ALL EASTERN STYLE WATER CLOSETS IN THIS FACILITY ARE TO HAVE THE FIXTURE DESIGNATION OF W-1. EACH FIXTURE SHALL HAVE A (1) INCH (25mm) COLD WATER CONNECTION AND A (4) INCH (102mm) SANITARY CONNECTION.
6. ALL TROUGH FIXTURES IN THIS FACILITY ARE TO HAVE THE FIXTURE DESIGNATION OF L-1. EACH FIXTURE SHALL HAVE A (1/2 INCH)/(13mm) COLD WATER, (1/2 INCH)/(13mm) HOT WATER CONNECTION AND A (3 INCH)/(76mm) SANITARY CONNECTION.
7. ALL SHOWER FIXTURES IN THIS FACILITY ARE TO HAVE THE FIXTURE DESIGNATION OF SH-1. EACH FIXTURE SHALL HAVE A (1/2 INCH)/(13mm) COLD WATER, (1/2 INCH)/(13mm) HOT WATER CONNECTION AND A (3 INCH)/(76mm) SANITARY CONNECTION TO A FLOOR DRAIN.
9. PLUMBING CONTRACTOR TO PROVIDE WATER HAMMER ARRESTORS AT ALL WATER CLOSETS.
10. PLUMBING CONTRACTOR TO PROVIDE TRAP PRIMERS AND 1/2" (13mm) COLD WATER LINES FOR ALL FLOOR DRAINS. COLD WATER LINES TO BE UNDER THE FLOOR FROM TRAP PRIMERS TO TRAPS ON FLOOR DRAINS.
11. REFER TO SHEET S-P1 & S-P2 FOR DETAILS AND SYMBOLS.
12. ALL WATER LINES TO BE EXPOSED. RUN LINES TIGHT TO CEILING AND WALL.
13. ALL FIXTURES TO BE "LOW FLOW EFFICIENT FIXTURES".

1 0 1 2 3 4 5 6 7 8 9
1:100

SYMBOL	DESCRIPTION	DATE	APR

DESIGNED BY: RMH
DWN BY: RMH
CHK BY: MRS
DATE: 04-01-08
SUBMITTED BY: BAKER
FILE NO.:

Baker
MICHAEL BAKER JR., INC.
Airside Business Park
100 Airside Drive
Moon Township, Pa. 15108
(412) 269-6300

US Army Corps of Engineers
Transatlantic Programs Center

AFGHAN NATIONAL BORDER POLICE
AFGHANISTAN NATIONAL BORDER POLICE UNIT FACILITY
BORDER POLICE COMPANY

SENIOR AND HIGH BARRACKS
FIRST FLOOR PLAN - PLUMBING

SHEET REFERENCE NUMBER:
G-P1

READY TO ADVERTISE SUBMISSION

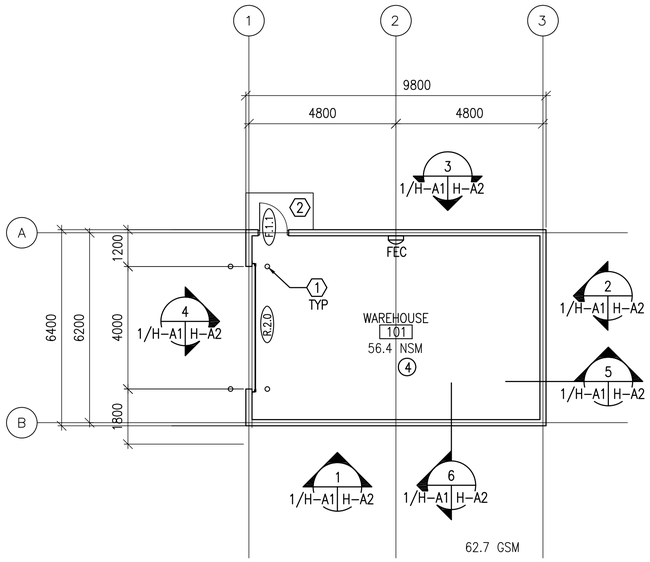

1 H-A1 H-A1 WAREHOUSE FLOOR PLAN

SCALE: 1:100

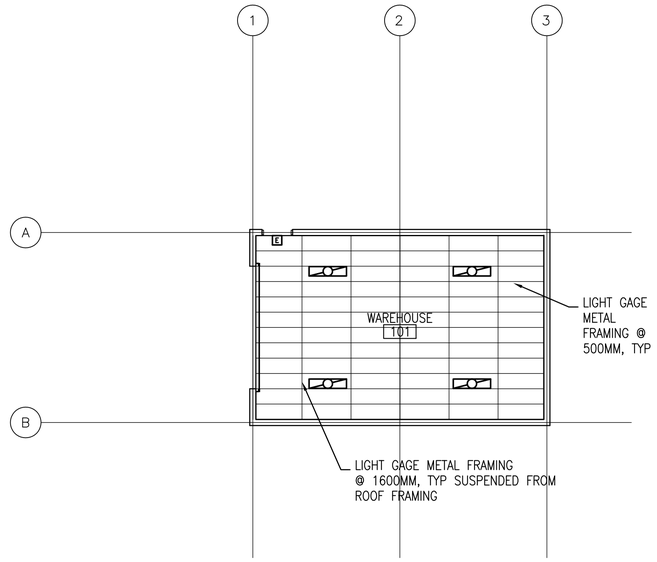

3 H-A1 H-A1 WAREHOUSE REFLECTED CEILING PLAN

SCALE: 1:100

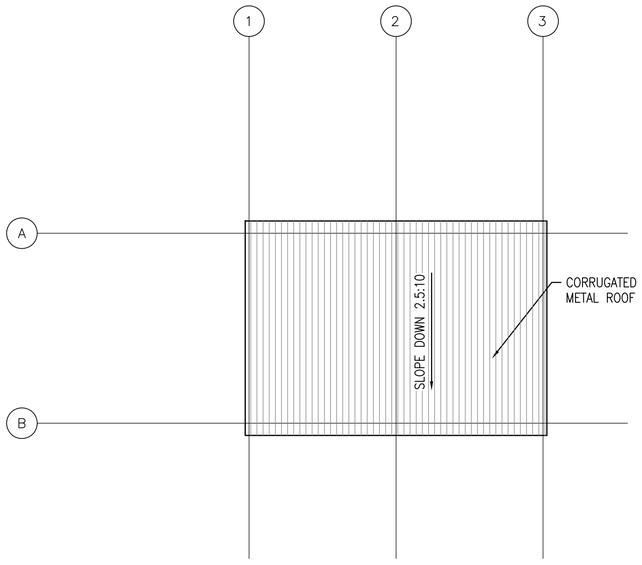

2 H-A1 H-A1 WAREHOUSE ROOF PLAN

SCALE: 1:100

LEGEND:

- F.1.4 — DOOR TYPE, SEE SHEET S-A8
- 1 — PARTITION TYPE, SEE SHEET S-A3
- A — WINDOW TYPE, SEE SHEET S-A8
- X — KEY NOTE
- FEC — FIRE EXTINGUISHER CABINET
- LIGHTING FIXTURE – RE: ELEC
- 1 — ROOM FINISH; SEE SHEET S-A8
- E — EXIT SIGN – RE: ELEC

KEY NOTES:

1. BOLLARD – RE: DETAIL 3/S-A13
2. CONCRETE STOOP – RE: DETAIL 1/S-A13

FLOOR PLAN NOTES:

1. ALL INTERIOR PARTITIONS SHALL BE TYPE 1 UNLESS NOTED OTHERWISE

2. OPENINGS FOR DOORS SHALL BE LOCATED 200 MM FROM THE ADJACENT WALL UNLESS NOTED OTHERWISE

3. SURFACES TO BE PAINTED SHALL BE CLEAN AND FREE OF FOREIGN MATTER BEFORE APPLICATION OF PAINT. CLEANING SHALL BE SCHEDULED SO THAT DUST AND OTHER CONTAMINANTS WILL NOT FALL ON WET, NEWLY PAINTED SURFACES.

4. ONCRETE AND INTERIOR MASONRY SURFACES GROUTED SOLID SHALL BE ALLOWED TO DRY AT LEAST 30 DAYS BEFORE PAINTING EXCEPT CONCRETE SLAB ON GRADE WHICH SHALL BE ALLOWED TO CURE 90 DAYS BEFORE PAINTING.

5. PAINTS CONTAINING LEAD IN EXCESS OF 0.06 PERCENT BY WEIGHT OF THE TOTAL NONVOLATILE CONTENT SHALL NOT BE USED.

6. MERCURIAL FUNGICIDES SHALL NOT BE USED IN OIL-BASE PAINT.

7. REMOVE LOOSE DIRT AND CLEAN SURFACES BEFORE PAINTING. APPLY PAINT TO INTERIOR STRUCTURAL RIGID FRAMINGS AND CEILINGS AND TEST FOR ADHESION. PRIMER COAT FOR MASONRY. INITIAL FIRST COAT WITH AN ACRYLIC LATEX PAINT FOR EXTERIOR SURFACES AND A SECOND COAT WITH A WATER REPELLENT ACRYLIC LATEX PAINT.

8. NTERIOR METAL DOORS AND FRAMES SHALL RECEIVE A PRIMER COAT PLUS TWO COATS OF PAINT.

9. DIMENSIONS ARE TO CENTERLINE OF WINDOW OPENINGS, AND TO HINGE SIDE OF DOOR OPENINGS.

CEILING PLAN NOTES:

1. TYPICAL CEILING HEIGHT SHALL BE 4400MM +/-, UNLESS NOTED OTHERWISE
2. ALL CEILING SURFACES SHALL BE PAINTED PLASTER ON METAL LATH
3. COORDINATE FINAL LAYOUT AND QUANTITY OF ACCESS PANELS WITH CONCEALED MECHANICAL EQUIPMENT
4. COORDINATE FINAL LAYOUT AND QUANTITY OF ELECTRICAL AND MECHANICAL ITEMS WITH ELECTRICAL AND MECHANICAL DRAWINGS

1 0 1 2 3 4 5 6 7 8 9

1:100

SYMBOL	DESCRIPTION	DATE	APR

DESIGNED BY: BAKER
DWN BY: JEB
CHK BY: DMP
DATE: 04-01-08
SUBMITTED BY: BAKER
FILE NO.:

Baker
MICHAEL BAKER JR., INC.
Airside Business Park
100 Airside Drive
Moon Township, Pa. 15108
(412) 269-6300

US Army Corps of Engineers
Transatlantic Programs Center

AFGHAN NATIONAL BORDER POLICE
AFGHANISTAN NATIONAL BORDER POLICE UNIT FACILITY
BORDER POLICE COMPANY

WAREHOUSE FLOOR PLAN, ROOF PLAN, AND REFLECTED CEILING PLAN

SHEET REFERENCE NUMBER:
H-A1

READY TO ADVERTISE SUBMISSION

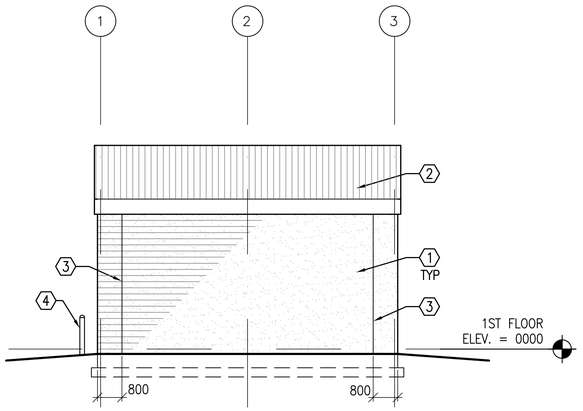

1 1/H-A1 H-A2 WAREHOUSE ELEVATION
SCALE: 1:100

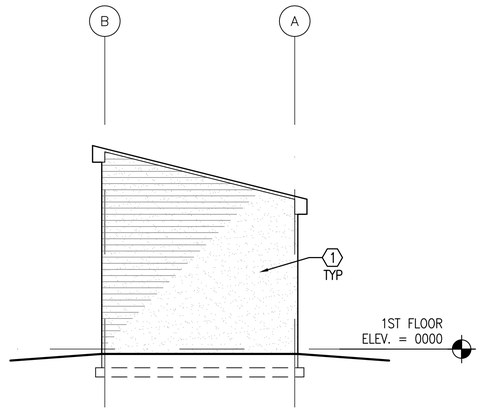

2 1/H-A1 H-A2 WAREHOUSE ELEVATION
SCALE: 1:100

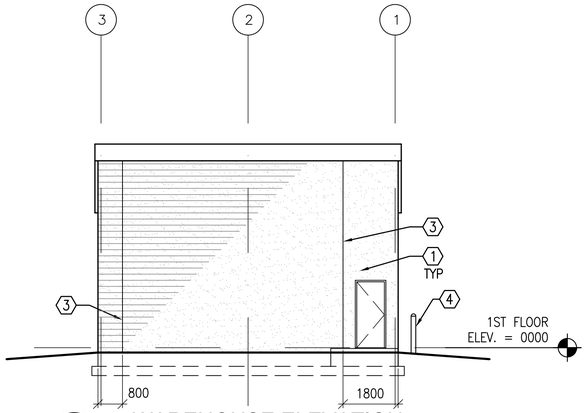

3 1/H-A1 H-A2 WAREHOUSE ELEVATION
SCALE: 1:100

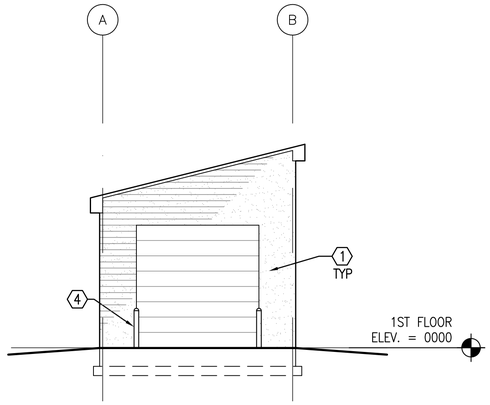

4 1/H-A1 H-A2 WAREHOUSE ELEVATION
SCALE: 1:100

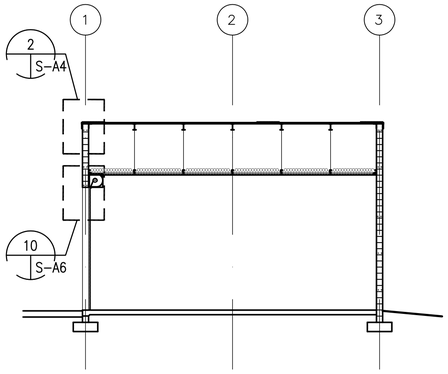

5 1/H-A1 H-A2 WAREHOUSE SECTION
SCALE: 1:100

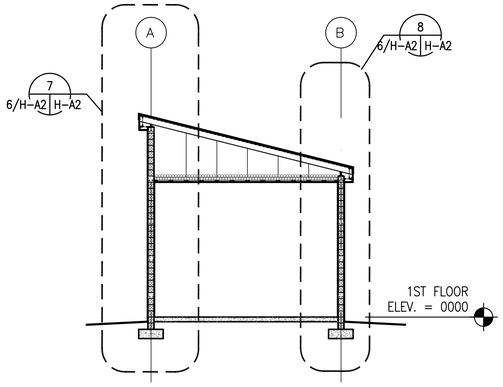

6 1/H-A1 H-A2 WAREHOUSE SECTION
SCALE: 1:100

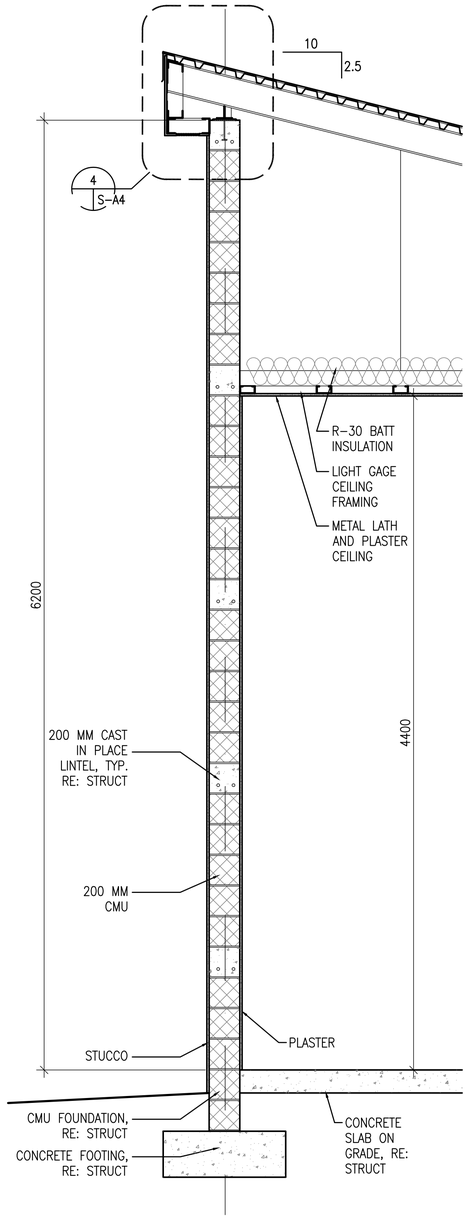

7 6/H-A2 H-A2 WALL SECTION
SCALE: 1:20

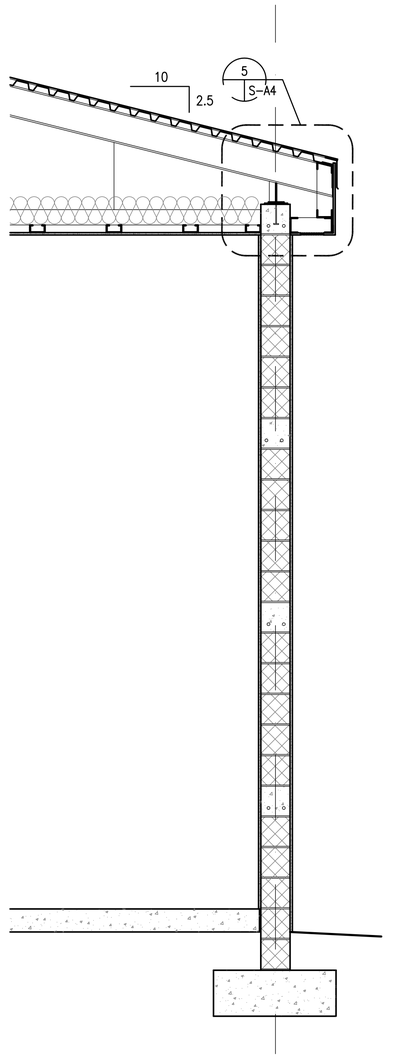

8 6/H-A2 H-A2 WALL SECTION
SCALE: 1:20

1 0 1 2 3 4 5 6 7 8 9
1:100

GENERAL NOTES:

1. COORDINATE SIZE AND LOCATION OF OPENINGS FOR MECHANICAL ITEMS WITH MECHANICAL DRAWINGS.
2. PROVIDE STRUCTURAL LINTELS AS REQUIRED – RE: STRUCT

KEY NOTES: (X)

1. STUCCO ON CMU
2. CORRUGATED METAL ROOF
3. STUCCO CONTROL JOINT ALIGNED WITH CMU CONTROL JOINT
4. GALVANIZED STEEL BOLLARD FILLED WITH CONCRETE ON EACH SIDE OF ROLL UP DOOR.

REGISTERED ARCHITECT COMMONWEALTH OF PENNSYLVANIA X-21021-X ROMAN M. TEFT

SYMBOL	DESCRIPTION	DATE	APR

DESIGNED BY: BAKER
DWN BY: JEB
CHK BY: DMP
DATE: 04-01-08
SUBMITTED BY: BAKER
FILE NO.:

Baker
MICHAEL BAKER JR., INC.
Airside Business Park
100 Airside Drive
Moon Township, Pa. 15108
(412) 269-6300

US Army Corps of Engineers
Transatlantic Programs Center

AFGHAN NATIONAL BORDER POLICE
AFGHANISTAN NATIONAL BORDER POLICE UNIT FACILITY
BORDER POLICE COMPANY
WAREHOUSE
EXTERIOR ELEVATIONS

SHEET REFERENCE NUMBER:
H-A2

READY TO ADVERTISE SUBMISSION