PANEL LOCATION: DINING – BUILDING 'B1'

PANELBOARD B1 SURFACE MOUNTED 22,000 ASYM. A.I.C. MIN. NEMA 1
AMP. MAIN LUGS (OR) 150 AMP. MAIN BREAKER W/ 150 AMP. TRIP
CIRCUIT BREAKER TYPE 380/220 VOLTS 3 PHASE 4 WIRE 50 HZ 225 AMP. BUS

CKT. NO.	TRIP AMPS	NO. POLES	WIRE MM 2	GND MM2	CONDUIT MM	LOAD SERVED	LOAD–V.A. A0	LOAD–V.A. B0	LOAD–V.A. C0	LOAD–V.A. A0	LOAD–V.A. B0	LOAD–V.A. C0	LOAD SERVED	CONDUIT MM	GND MM2	WIRE MM2	NO. POLES	TRIP AMPS	CKT. NO.
1	20	1	4.0	4.0	20	Lighting – 110, 111	0.3			1.0			Lighting – 104 – 109	20	4.0	4.0	1	20	2
3	20	1	4.0	4.0	20	Lighting – 103		0.8			0.8		Lighting – 102	20	4.0	4.0	1	20	4
5	20	1	4.0	4.0	20	Lighting – 101			1.1			0.3	Lighting – 100	20	4.0	4.0	1	20	6
7	20	1	4.0	4.0	20	Receptacles – 101, 102	1.2			2.0			Junction Box – 107	20	4.0	4.0	1	20	8
9	20	1	4.0	4.0	20	Junction Box – 107		2.0			2.0		Junction Box – 107	20	4.0	4.0	1	20	10
11	20	1	4.0	4.0	20	Junction Box – 107			2.0			1.0	Receptacles – 103	20	4.0	4.0	1	20	12
13	20	1	4.0	4.0	20	Junction Box – 104	2.0			1.0			Receptacles – 103	20	4.0	4.0	1	20	14
15	20	1	4.0	4.0	20	Receptacles – 102		1.2			0.3		Exhaust Fan – 104	20	4.0	4.0	1	20	16
17	20	1	4.0	4.0	20	F.A.C.P			0.5			0.1	Exhaust Fan – 106	20	4.0	4.0	1	20	18
19	20	1	4.0	4.0	20	Receptacles – 110, 111	0.4			1.2			Receptacles – 104	20	4.0	4.0	1	20	20
21	20	1	4.0	4.0	20	Receptacles – Exterior		0.8			0.8		Receptacles – 105	20	4.0	4.0	1	20	22
23	20	1	4.0	4.0	20	Receptacles – Exterior			1.0			0.8	Receptacles – 106–109	20	4.0	4.0	1	20	24
25	20	1	4.0	4.0	20	Ceiling Fans	0.8			1.2			Receptacles – 100, 101	20	4.0	4.0	1	20	26
27	20	1	4.0	4.0	20	Exhaust Fan – 107		0.2			1.5								28
29	20	1	4.0	4.0	20	Exhaust Fan – 103			2.3			1.5	Electric Unit Heater – 106	20	4.0	4.0	2	20	30
31	30	1	6.0	6.0	20	Exhaust Fan – 103	3.9			1.5									32
33								1.5			1.5		Electric Unit Heater – 104	20	4.0	4.0	2	20	34
35	20	2	4.0	4.0	20	Electric Unit Heater – 102			1.5			8.0							36
37	20	1				Spare				8.0			Water Heater	20	6.0	16.0	3	50	38
39	20	1				Spare					8.0								40
41	20	1				Spare							Spare				1	20	42
							8.6	6.5	8.4	15.9	14.9	11.7							

TOTAL CONN. LOAD PER PHASE (KVA): A0 24.5 B0 21.4 C0 20.1

TOTAL CONN. LOAD 66.0 KVA. 70 % DEMAND = ESTIMATED DEMAND LOAD 46.2 SUPPLIED FROM PANEL 'DPI'

* MAIN BREAKER SHALL BE EARTH GROUND TYPE

PANEL LOCATION: LATRINE – BUILDING 'D'

PANELBOARD D1 SURFACE MOUNTED 22,000 ASYM. A.I.C. MIN. NEMA 1
AMP. MAIN LUGS (OR) 150 AMP. MAIN BREAKER W/ 150 AMP. TRIP
CIRCUIT BREAKER TYPE 380/220 VOLTS 1 PHASE 3 WIRE 50 HZ 225 AMP. BUS

CKT. NO.	TRIP AMPS	NO. POLES	WIRE MM 2	GND MM2	CONDUIT MM	LOAD SERVED	LOAD–V.A. A0	LOAD–V.A. B0	LOAD–V.A. A0	LOAD–V.A. B0	LOAD SERVED	CONDUIT MM	GND MM2	WIRE MM2	NO. POLES	TRIP AMPS	CKT. NO.
1	20	1	4.0	4.0	20	Lighting – 101	0.5		1.0		Lighting – 104–107	20	4.0	4.0	1	20	2
3	20	1	4.0	4.0	20	Lighting – 102, 103		1.4		1.5							4
5							1.5		1.5		Electric Unit Heater – 106	20	4.0	4.0	2	20	6
7	20	2	4.0	4.0	20	Electric Unit Heater – 104		1.5			Spare				1	20	8
9	20	1	4.0	4.0	20	F.A.C.P.	0.5		0.7		Water Heater	20	4.0	4.0	1	20	10
11	20	1	4.0	4.0	20	Receptacles – 101, 102		1.0		1.0	Receptacles – 104, 105	20	4.0	4.0	1	20	12
13	20	1				Spare			0.4		Receptacles – 106, 107	20	4.0	4.0	1	20	14
15	20	1	4.0	4.0	20	Exhaust Fan – 101		0.7		0.7	Exhaust Fan – 106	20	4.0	4.0	1	20	16
17	20	1	4.0	4.0	20	Exhaust Fan – 105	0.1		0.1		Exhaust Fan – 104	20	4.0	4.0	1	20	18
19	20	1	4.0	4.0	20	Receptacles – Exterior		0.8			Spare				1	20	20
21							1.5				Spare				1	20	22
23	20	2	4.0	4.0	20	Electric Unit Heater – 101		1.5		1.5							24
25							1.5		1.5		Electric Unit Heater – 103	20	4.0	4.0	2	20	26
27	20	2	4.0	4.0	20	Electric Unit Heater – 101		1.5		1.5							28
29							1.5		1.5		Electric Unit Heater – 103	20	4.0	4.0	2	20	30
31	20	2	4.0	4.0	20	Electric Unit Heater – 107		1.5		1.5							32
33	20	1				Spare			1.5		Electric Unit Heater – 102	20	4.0	4.0	2	20	34
35	20	1				Spare					Spare				1	20	36
37	20	1				Spare					Spare				1	20	38
39	20	1				Spare					Spare				1	20	40
41	20	1				Spare					Spare				1	20	42
							7.1	9.9	8.2	7.7							

TOTAL CONN. LOAD PER PHASE (KVA): A0 15.3 B0 17.6

TOTAL CONN. LOAD 32.9 KVA. 70 % DEMAND = ESTIMATED DEMAND LOAD 23.0 SUPPLIED FROM PANEL 'DPI'

* MAIN BREAKER SHALL BE EARTH GROUND TYPE

PANEL LOCATION: MIDDLE/ORDINARY BARRACKS – BUILDING 'E'

PANELBOARD E1 SURFACE MOUNTED 22,000 ASYM. A.I.C. MIN. NEMA 1
AMP. MAIN LUGS (OR) 50 AMP. MAIN BREAKER W/ 50 AMP. TRIP
CIRCUIT BREAKER TYPE 380/220 VOLTS 1 PHASE 3 WIRE 50 HZ 100 AMP. BUS

CKT. NO.	TRIP AMPS	NO. POLES	WIRE MM 2	GND MM2	CONDUIT MM	LOAD SERVED	LOAD–V.A. A0	LOAD–V.A. B0	LOAD–V.A. A0	LOAD–V.A. B0	LOAD SERVED	CONDUIT MM	GND MM2	WIRE MM2	NO. POLES	TRIP AMPS	CKT. NO.
1	20	1	4.0	4.0	20	Lighting – 101	1.3		1.3		Lighting – 101, 102	20	4.0	4.0	1	20	2
3	20	1	4.0	4.0	20	Lighting – 101		1.6		1.2	Receptacles – 101	20	4.0	4.0	1	20	4
5	20	1	4.0	4.0	20	F.A.C.P.	0.5		1.2		Receptacles – 101	20	4.0	4.0	1	20	6
7	20	1	4.0	4.0	20	Receptacles – 101		1.2			Spare				1	20	8
9	20	1	4.0	4.0	20	Receptacles – 101, 102	1.4				Spare				1	20	10
11	20	1	4.0	4.0	20	Receptacles – Columns		0.8			Spare				1	20	12
13	20	1	4.0	4.0	20	Ceiling Fans	1.0				Spare				1	20	14
15	20	1				Spare					Spare				1	20	16
17	20	1				Spare					Spare				1	20	18
19	20	1				Spare					Spare				1	20	20
21	20	1				Spare					Spare				1	20	22
23	20	1				Spare					Spare				1	20	24
25	20	1				Spare					Spare				1	20	26
27	20	1				Spare					Spare				1	20	28
29	20	1				Spare					Spare				1	20	30
31	20	1				Spare					Spare				1	20	32
33	20	1				Spare					Spare				1	20	34
35	20	1				Spare					Spare				1	20	36
37	20	1				Spare					Spare				1	20	38
39	20	1				Spare					Spare				1	20	40
41	20	1				Spare					Spare				1	20	42
							4.2	3.6	2.5	1.2							

TOTAL CONN. LOAD PER PHASE (KVA): A0 6.7 B0 4.8

TOTAL CONN. LOAD 11.5 KVA. 70 % DEMAND = ESTIMATED DEMAND LOAD 8.1 SUPPLIED FROM PANEL 'DPII'

* MAIN BREAKER SHALL BE EARTH GROUND TYPE

PANEL LOCATION: SENIOR/HIGH BARRACKS – BUILDING 'G'

PANELBOARD G1 SURFACE MOUNTED 22000 ASYM. A.I.C. MIN. NEMA 1
AMP. MAIN LUGS (OR) 150 AMP. MAIN BREAKER W/ 150 AMP. TRIP
CIRCUIT BREAKER TYPE 380/220 VOLTS 1 PHASE 3 WIRE 50 HZ 225 AMP. BUS

CKT. NO.	TRIP AMPS	NO. POLES	WIRE MM 2	GND MM2	CONDUIT MM	LOAD SERVED	LOAD–V.A. A0	LOAD–V.A. B0	LOAD–V.A. A0	LOAD–V.A. B0	LOAD SERVED	CONDUIT MM	GND MM2	WIRE MM2	NO. POLES	TRIP AMPS	CKT. NO.
1	20	1	4.0	4.0	20	Lighting – Corridor	0.7		1.4		Lighting – 102–114 (EVEN)	20	4.0	4.0	1	20	2
3	20	1	4.0	4.0	20	Lighting – 101–115 (ODD)		1.6		1.2	Receptacles – 102, 104, 106	20	4.0	4.0	1	20	4
5	20	1	4.0	4.0	20	Receptacles – 101, 103, 105	1.2		1.2		Receptacles – 108, 110	20	4.0	4.0	1	20	6
7	20	1	4.0	4.0	20	Receptacles – 107, 109		0.8		1.2	Receptacles – 112, 114	20	4.0	4.0	1	20	8
9	20	1	4.0	4.0	20	Receptacles – 111	1.2		1.4		Receptacles – Corridor, Exterior	20	4.0	4.0	1	20	10
11	20	1	4.0	4.0	20	Receptacles – 113, 115		1.2			Spare				1	20	12
13	20	1				Spare					Spare				1	20	14
15	20	1				Spare				8.0							16
17	20	1	4.0	4.0	20	F.A.C.P.	0.5		8.0		Water Heater	20	6.0	16.0	3	50	18
19								1.5		8.0							20
21	20	2	4.0	4.0	20	Electric Unit Heater – 109	1.5				Spare				1	20	22
23	20	1	4.0	4.0	20	Ceiling Fans		1.2			Spare				1	20	24
25	20	1	4.0	4.0	20	Exhaust Fan – 109	0.1				Spare				1	20	26
27	20	1				Spare					Spare				1	20	28
29	20	1				Spare					Spare				1	20	30
31	20	1				Spare					Spare				1	20	32
33	20	1				Spare					Spare				1	20	34
35	20	1				Spare					Spare				1	20	36
37	20	1				Spare					Spare				1	20	38
39	20	1				Spare					Spare				1	20	40
41	20	1				Spare					Spare				1	20	42
							5.2	6.3	12.0	18.4							

TOTAL CONN. LOAD PER PHASE (KVA): A0 17.2 B0 24.7

TOTAL CONN. LOAD 41.9 KVA. 70 % DEMAND = ESTIMATED DEMAND LOAD 29.3 SUPPLIED FROM PANEL 'DPII'

* MAIN BREAKER SHALL BE EARTH GROUND TYPE

JOSEPH R. GAUS
REGISTERED PROFESSIONAL ENGINEER
PE-074261
COMMONWEALTH OF PENNSYLVANIA

DESCRIPTION	DATE	APR

DESIGNED BY: ALF
DWN BY: ALF
CHK BY: JRG
DATE: 04-01-08
SUBMITTED BY: JRG
FILE NO.: ------

Baker
MICHAEL BAKER JR., INC.
Airside Business Park
100 Airport Drive
Moon Township, Pa. 15108
(412) 269-6300

US Army Corps of Engineers
Transatlantic Programs Center

AFGHAN NATIONAL BORDER POLICE
AFGHANISTAN NATIONAL BORDER POLICE UNIT FACILITY
BORDER POLICE COMPANY
AFGHANISTAN
PANEL SCHEDULES

SHEET REFERENCE NUMBER:
R-E3

READY TO ADVERTISE SUBMISSION

PANEL LOCATION: WAREHOUSE – BUILDING 'H'

PANELBOARD H1 SURFACE MOUNTED 22,000 ASYM. A.I.C. MIN. NEMA 1
50 AMP. MAIN LUGS (OR) 50 AMP. MAIN BREAKER W/ 50 AMP. TRIP
CIRCUIT BREAKER TYPE 220 VOLTS 1 PHASE 3 WIRE 50 HZ 100 AMP. BUS

CKT. NO.	TRIP AMPS	NO. POLES	WIRE MM 2	GND MM2	CONDUIT MM	LOAD SERVED	LOAD–V.A. A0	LOAD–V.A. B0	LOAD–V.A. A0	LOAD–V.A. B0	LOAD SERVED	CONDUIT MM	GND MM2	WIRE MM2	NO. POLES	TRIP AMPS	CKT. NO.
1	20	1	4.0	4.0	20	Lighting – 101	0.6		0.6		Receptacles – 101	20	4.0	4.0	1	20	2
3	20	1	4.0	4.0	20	F.A.C.P.		0.5		1.6	Guard Tower #3				1	20	4
5	20	1				Spare					Spare				1	20	6
7	20	1				Spare					Spare				1	20	8
9	20	1				Spare					Spare				1	20	10
11	20	1				Spare					Spare				1	20	12
13	20	1				Spare					Spare				1	20	14
15	20	1				Spare					Spare				1	20	16
17	20	1				Spare					Spare				1	20	18
19	20	1				Spare					Spare				1	20	20
21	20	1				Spare					Spare				1	20	22
23	20	1				Spare					Spare				1	20	24
25	20	1				Spare					Spare				1	20	26
27	20	1				Spare					Spare				1	20	28
29	20	1				Spare					Spare				1	20	30
31	20	1				Spare					Spare				1	20	32
33	20	1				Spare					Spare				1	20	34
35	20	1				Spare					Spare				1	20	36
37	20	1				Spare					Spare				1	20	38
39	20	1				Spare					Spare				1	20	40
41	20	1				Spare					Spare				1	20	42
							0.6	0.5	0.6	1.6							

TOTAL CONN. LOAD PER PHASE (KVA): A0 1.2 B0 2.1

TOTAL CONN. LOAD 3.3 KVA. 100 % DEMAND = ESTIMATED DEMAND LOAD 3.3 SUPPLIED FROM PANEL 'DP1'

* MAIN BREAKER SHALL BE EARTH GROUND TYPE

PANEL LOCATION: POL BUILDING – BUILDING 'J'

PANELBOARD J1 SURFACE MOUNTED 22,000 ASYM. A.I.C. MIN. NEMA 1
50 AMP. MAIN LUGS (OR) 50 AMP. MAIN BREAKER W/ 50 AMP. TRIP
CIRCUIT BREAKER TYPE 380/220 VOLTS 3 PHASE 4 WIRE 50 HZ 100 AMP. BUS

CKT. NO.	TRIP AMPS	NO. POLES	WIRE MM 2	GND MM2	CONDUIT MM	LOAD SERVED	LOAD–V.A. A0	LOAD–V.A. B0	LOAD–V.A. C0	LOAD–V.A. A0	LOAD–V.A. B0	LOAD–V.A. C0	LOAD SERVED	CONDUIT MM	GND MM2	WIRE MM2	NO. POLES	TRIP AMPS	CKT. NO.
1	20	1				Spare							Spare				1	20	2
3	20	1				Spare					0.3		Lighting – POL Building	20	4.0	4.0	1	20	4
5	20	1				Spare							Spare				1	20	6
7	20	1				Spare							Spare				1	20	8
9	20	1				Spare							Spare				1	20	10
11	60	2										6.6							12
13						Spare				6.6			Air Compressor	25	6.0	16.0	3	50	14
15	20	1				Spare					6.6								16
17	20	1				Spare													18
19	20	1				Spare							Spare				2	60	20
21	20	1				Spare							Spare				1	20	22
23	20	1	4.0	4.0	20	Receptacles – POL Building			0.4				Spare				1	20	24
25	20	1				Spare							Spare				1	20	26
27	20	1				Spare							Spare				1	20	28
29	20	1				Spare							Spare				1	20	30
31	20	1				Spare							Spare				1	20	32
33	20	1				Spare							Spare				1	20	34
35	20	1				Spare							Spare				1	20	36
37	20	1				Spare							Spare				1	20	38
39	20	1				Spare							Spare				1	20	40
41	20	1				Spare							Spare				1	20	42
							–	–	0.4	6.6	6.9	6.6							

TOTAL CONN. LOAD PER PHASE (KVA): A0 6.6 B0 6.9 C0 7.0

TOTAL CONN. LOAD 20.5 KVA. 70 % DEMAND = ESTIMATED DEMAND LOAD 14.4 SUPPLIED FROM SWITCHGEAR 'DP1'

* MAIN BREAKER SHALL BE EARTH GROUND TYPE

PANEL LOCATION: AMMUNITION SUPPLY – BUILDING 'K'

PANELBOARD K1 SURFACE MOUNTED 22,000 ASYM. A.I.C. MIN. NEMA 1
100 AMP. MAIN LUGS (OR) 100 AMP. MAIN BREAKER W/ 100 AMP. TRIP
CIRCUIT BREAKER TYPE 380/220 VOLTS 1 PHASE 3 WIRE 50 HZ 100 AMP. BUS

CKT. NO.	TRIP AMPS	NO. POLES	WIRE MM 2	GND MM2	CONDUIT MM	LOAD SERVED	LOAD–V.A. A0	LOAD–V.A. B0	LOAD–V.A. A0	LOAD–V.A. B0	LOAD SERVED	CONDUIT MM	GND MM2	WIRE MM2	NO. POLES	TRIP AMPS	CKT. NO.
1	20	2	4.0	4.0	20	Electric Unit Heater – 102	1.5		0.8		Lighting – 101, 102	20	4.0	4.0	1	20	2
3								1.5		0.4	Receptacles – 101, 102	20	4.0	4.0	1	20	4
5	20	1	4.0	4.0	20	Receptacles – Exterior	0.4		1.5		Electric Unit Heater – 101	20	4.0	4.0	2	20	6
7	20	1	4.0	4.0	20	Exhaust Fan – 101		0.5		1.5							8
9	20	2	4.0	4.0	20	Electric Unit Heater – 101	1.5		1.6		Guard Tower #2				1	20	10
11								1.5			Spare				1	20	12
13	20	1				Spare					Spare				1	20	14
15	20	1				Spare					Spare				1	20	16
17	20	1				Spare					Spare				1	20	18
19	20	1				Spare					Spare				1	20	20
21	20	1				Spare					Spare				1	20	22
23	20	1				Spare					Spare				1	20	24
25	20	1				Spare					Spare				1	20	26
27	20	1				Spare					Spare				1	20	28
29	20	1				Spare					Spare				1	20	30
31	20	1				Spare					Spare				1	20	32
33	20	1				Spare					Spare				1	20	34
35	20	1				Spare					Spare				1	20	36
37	20	1				Spare					Spare				1	20	38
39	20	1				Spare					Spare				1	20	40
41	20	1				Spare					Spare				1	20	42
							3.4	3.5	3.9	1.9							

TOTAL CONN. LOAD PER PHASE (KVA): A0 7.3 B0 5.4

TOTAL CONN. LOAD 12.7 KVA. 70 % DEMAND = ESTIMATED DEMAND LOAD 8.9 SUPPLIED FROM PANEL 'DP1'

* MAIN BREAKER SHALL BE EARTH GROUND TYPE

PANEL LOCATION: GATEHOUSE – BUILDING 'M'

PANELBOARD M1 SURFACE MOUNTED 22,000 ASYM. A.I.C. MIN. NEMA 1
50 AMP. MAIN LUGS (OR) 50 AMP. MAIN BREAKER W/ 50 AMP. TRIP
CIRCUIT BREAKER TYPE 380/220 VOLTS 1 PHASE 3 WIRE 50 HZ 100 AMP. BUS

CKT. NO.	TRIP AMPS	NO. POLES	WIRE MM 2	GND MM2	CONDUIT MM	LOAD SERVED	LOAD–V.A. A0	LOAD–V.A. B0	LOAD–V.A. A0	LOAD–V.A. B0	LOAD SERVED	CONDUIT MM	GND MM2	WIRE MM2	NO. POLES	TRIP AMPS	CKT. NO.
1	20	1	4.0	4.0	20	Lighting	0.6		1.2		Receptacles	20	4.0	4.0	1	20	2
3	20	2	4.0	4.0	20	Electric Unit Heater		1.5		1.5	Electric Unit Heater	20	4.0	4.0	2	20	4
5							1.5		1.5								6
7	20	1	4.0	4.0	20	Receptacles		0.6		0.6	Guard Shack	20	6.0	10.0	1	20	8
9	20	1	10.0	6.0	20	Guard Shack Canopy Lighting	0.3		1.6		Guard Tower #1				1	20	10
11	20	1				Spare					Spare				1	20	12
13	20	1				Spare					Spare				1	20	14
15	20	1				Spare					Spare				1	20	16
17	20	1				Spare					Spare				1	20	18
19	20	1				Spare					Spare				1	20	20
21	20	1				Spare					Spare				1	20	22
23	20	1				Spare					Spare				1	20	24
25	20	1				Spare					Spare				1	20	26
27	20	1				Spare					Spare				1	20	28
29	20	1				Spare					Spare				1	20	30
31	20	1				Spare					Spare				1	20	32
33	20	1				Spare					Spare				1	20	34
35	20	1				Spare					Spare				1	20	36
37	20	1				Spare					Spare				1	20	38
39	20	1				Spare					Spare				1	20	40
41	20	1				Spare					Spare				1	20	42
							2.4	2.1	4.3	2.1							

TOTAL CONN. LOAD PER PHASE (KVA): A0 6.7 B0 4.2

TOTAL CONN. LOAD 10.9 KVA. 70 % DEMAND = ESTIMATED DEMAND LOAD 7.6 SUPPLIED FROM SWITCHGEAR 'DP11'

* MAIN BREAKER SHALL BE EARTH GROUND TYPE

JOSEPH R. GAUS
PROFESSIONAL ENGINEER
PE-074261
REGISTERED
COMMONWEALTH OF PENNSYLVANIA

SYMBOL	DESCRIPTION	DATE	APR

DESIGNED BY: ALF
DWN BY: ALF
CHK BY: JRG
DATE: 04-01-08
SUBMITTED BY: JRG
FILE NO.: _____

Baker
MICHAEL BAKER JR., INC.
Airside Business Park
100 Airport Drive
Moon Township, Pa. 15108
(412) 269-6300

US Army Corps of Engineers
Transatlantic Programs Center

AFGHAN NATIONAL BORDER POLICE
AFGHANISTAN NATIONAL BORDER POLICE UNIT FACILITY
BORDER POLICE COMPANY
AFGHANISTAN
PANEL SCHEDULES

SHEET REFERENCE NUMBER:
R-E4

READY TO ADVERTISE SUBMISSION

PANEL LOCATION: FUEL CANOPY – BUILDING 'O'

PANELBOARD 01 SURFACE MOUNTED 22,000 ** ASYM. A.I.C. MIN. NEMA 12

AMP. MAIN LUGS (OR) 100 AMP. MAIN BREAKER W/ 100 AMP. TRIP

CIRCUIT BREAKER TYPE 380/220 VOLTS 3 PHASE 4 WIRE 50 HZ 100 AMP. BUS

CKT. NO.	TRIP AMPS	NO. POLES	WIRE MM 2	GND MM2	CONDUIT MM	LOAD SERVED	LOAD-V.A. A0	LOAD-V.A. B0	LOAD-V.A. C0	LOAD-V.A. A0	LOAD-V.A. B0	LOAD-V.A. C0	LOAD SERVED	CONDUIT MM	GND MM2	WIRE MM2	NO. POLES	TRIP AMPS	CKT. NO.
1	20	1	4.0	4.0	20	Lighting	1.3			1.3			Lighting	20	4.0	4.0	1	20	2
3	20	2				Spare					0.6		Receptacles	20	4.0	4.0	1	20	4
5												3.3	Jacket Heater Gen. #2	20	6.0	6.0	2	30	6
7	30	2	6.0	6.0	20	Jacket Heater – Gen. #1	3.3			3.3									8
9								3.3			1.0		Control Power Gen. #2	20	4.0	4.0	1	30	10
11	20	1	4.0	4.0	20	Gen. #1 Control Power			1.0			1.0	Gen. #2 Housing	20	4.0	4.0	1	20	12
13	20	1	4.0	4.0	20	Gen. #1 Housing	1.0						Spare				1	20	14
15	20	1				Guard Tower #4		1.6			2.9		Smart Tank Control Panel #2	20	6.0	6.0	2	30	16
17	30	2	6.0	6.0	20	Smart Tank Control Panel #1			2.9			2.9	(Vehicle Fuel Tank #1)						18
19						(Mogas Fuel Tank #1)	2.9						Spare				2	30	20
21	30	2	6.0	6.0	20	Smart Tank Control Panel #3		2.9											22
23						(Vehicle Fuel Tank #2)			2.9				Spare				1	20	24
25	20	1				Spare							Spare				1	20	26
27	20	1				Spare							Spare				1	20	28
29	20	1				Spare							Spare				1	20	30
31	20	1				Spare							Spare				1	20	32
33	20	1				Spare							Spare				1	20	34
35	20	1				Spare							Spare				1	20	36
37	20	1				Spare							Spare				1	20	38
39	20	1				Spare							Spare				1	20	40
41	20	1				Spare							Spare				1	20	42
							8.5	7.8	6.8	4.6	4.5	7.2							

TOTAL CONN. LOAD PER PHASE (KVA): A0 13.1 B0 12.3 C0 14.0

TOTAL CONN. LOAD 39.4 KVA. 70 % DEMAND = ESTIMATED DEMAND LOAD 27.6 SUPPLIED FROM PANEL 'MDP'

* MAIN BREAKER SHALL BE EARTH GROUND TYPE
** PROVIDE 35 KAIC RATED PANEL FOR BP BATTALION AND COMPANY SITE.

COMMONWEALTH OF PENNSYLVANIA REGISTERED PROFESSIONAL JOSEPH R. GAUS ENGINEER PE-074251

SYMBOL	DESCRIPTION	DATE	APR

DESIGNED BY: ALF DATE: 04-01-08
DWN BY: ALF SUBMITTED BY: JRG
CHK BY: JRG FILE NO.: ------

Baker MICHAEL BAKER JR., INC.
Airside Business Park
100 Airside Drive
Moon Township, Pa. 15108
(412) 269-6300

US Army Corps of Engineers
Transatlantic Programs Center

AFGHAN NATIONAL BORDER POLICE
AFGHANISTAN NATIONAL BORDER POLICE UNIT FACILITY
BORDER POLICE COMPANY
AFGHANISTAN
PANEL SCHEDULES

SHEET REFERENCE NUMBER:
R-E5

READY TO ADVERTISE SUBMISSION

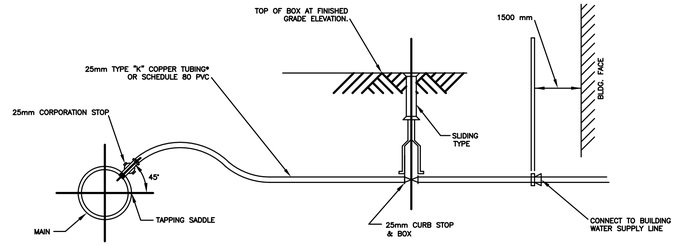

*DETAIL TYPICAL FOR 20mm THRU 50mm CONNECTIONS, SIZE OF COPORATION STOP, TUBING AND CURB STOP SHALL BE SIZED ACCORDINGLY. BLOWOFF VALVES LOCATED AT DEAD ENDS OF WATER MAINS SHALL CONSIST OF 50mm CONNECTION WITH TAP NEAR END OF PIPE, DISCHARGE TO SURFACE DRAINAGE. AND ANTI FREEZING PROVISIONS WHERE APPLICABLE.

WATER SERVICE CONNECTION DETAIL

N.T.S.

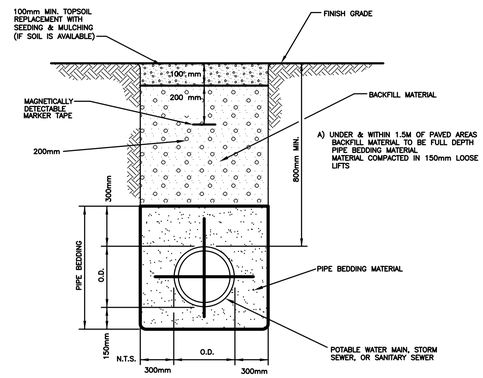

TYPICAL TRENCH DETAIL

N.T.S.

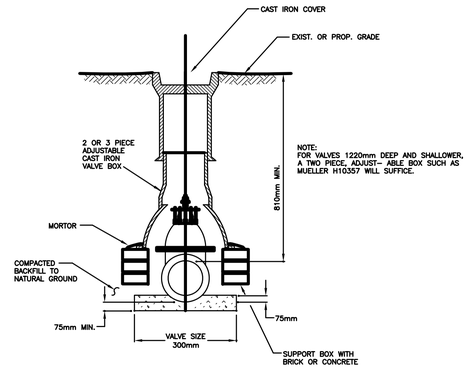

VALVE BOX INSTALLATION

N.T.S.

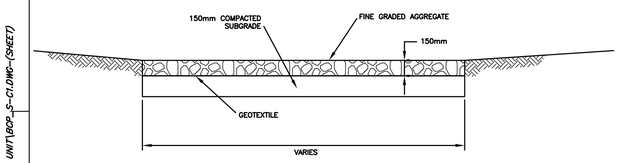

AGGREGATE PARKING AREAS

N.T.S.

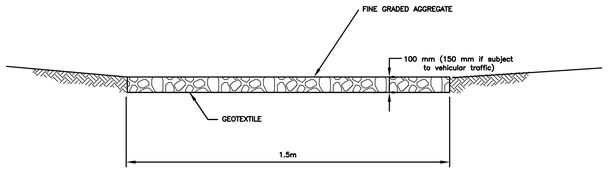

AGGREGATE SIDEWALK

N.T.S.

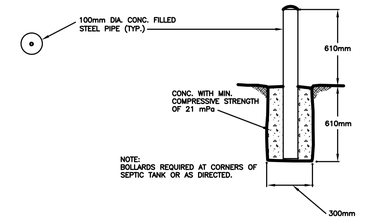

TYPICAL BOLLARDS

N.T.S.

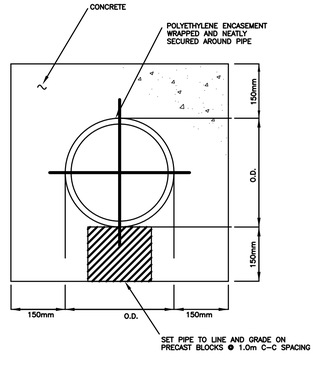

NOTE: REQUIRED FOR ROAD CROSSINGS WITH LESS THAN 1.2m COVER OR WHERE SANITARY AND WATER MAIN SEPARATION CANNOT BE MET.

PIPE CONCRETE ENCASEMENT DETAIL

N.T.S.

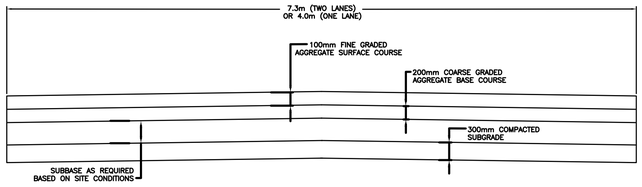

AGGREGATE ROADWAYS

N.T.S.

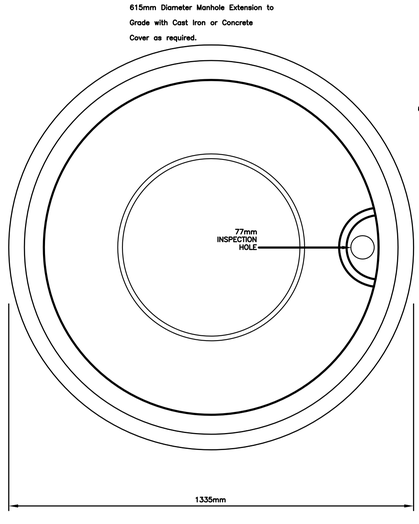

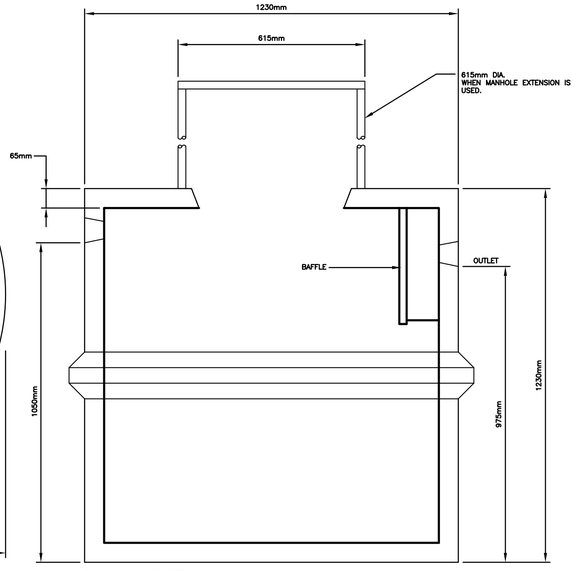

Total Volume – 1100 LITERS
Liquid Capacity – 925 LITERS
Weight – Approximately 100 KILOGRAMS

PRECAST CONCRETE GREASE TRAP

N.T.S.

DESIGNED BY: BAKER	DATE: 04-01-08
DWN BY: ---	SUBMITTED BY: BAKER
CHK BY: GPH	FILE NO.:

SYMBOL	DESCRIPTION	DATE	APR

Airside Business Park
100 Airside Drive
Moon Township, Pa. 15108
(412) 269-6300
MICHAEL BAKER JR, INC.

US Army Corps of Engineers
Transatlantic Programs Center

AFGHAN NATIONAL BORDER POLICE
AFGHANISTAN NATIONAL BORDER POLICE UNIT FACILITY
BORDER POLICE COMPANY
CIVIL DETAILS

SHEET REFERENCE NUMBER:
S-C1

READY TO ADVERTISE SUBMISSION

March 06, 2008 10:42:51 a.m. LOGIN NAME: jmiller
Drawing: K:\PROJECTS\USACE-TAC\W912ER-05-D-0002 AE & CM CONTRACT\TASK ORDER 0032 - DESIGN BORDER POLICE UNIT FACILITIES AFGHANISTAN\DRAWINGS\BCP UNIT\BCP_S-C1.DWG-(SHEET)

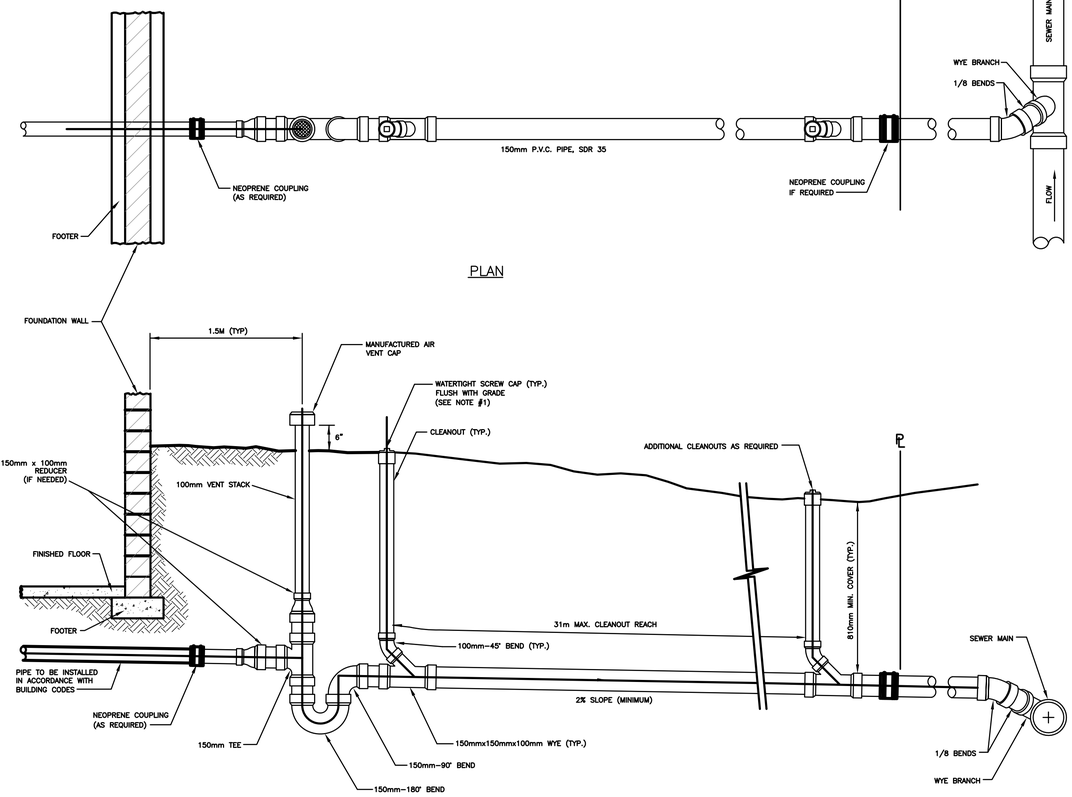

PLAN

PROFILE

NOTES:
1. PLUGS AND CLEANOUT RISERS SHALL BE PVC IF LOCATED OUTSIDE OF PAVED AREAS, AND SHALL BE CAST IRON IF LOCATED WITHIN PAVED AREAS.
2. A TEE MUST BE PROVIDED FOR AIR TESTING OF THE LATERAL.
3. NO STORM WATER PIPING MAY BE CONNECTED TO THE LATERAL.

SANITARY SEWER – BUILDING SERVICE LATERAL

N.T.S.

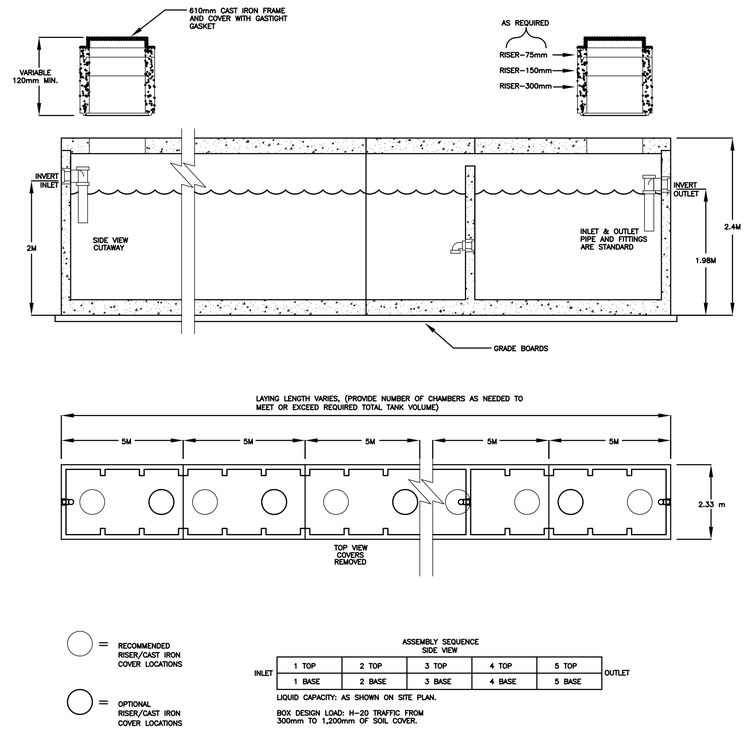

ASSEMBLY SEQUENCE SIDE VIEW

INLET						OUTLET
	1 TOP	2 TOP	3 TOP	4 TOP	5 TOP	
	1 BASE	2 BASE	3 BASE	4 BASE	5 BASE	

LIQUID CAPACITY: AS SHOWN ON SITE PLAN.

BOX DESIGN LOAD: H-20 TRAFFIC FROM 300mm TO 1,200mm OF SOIL COVER.

VARIABLE VOLUME BATTERY SEPTIC TANK

N.T.S.

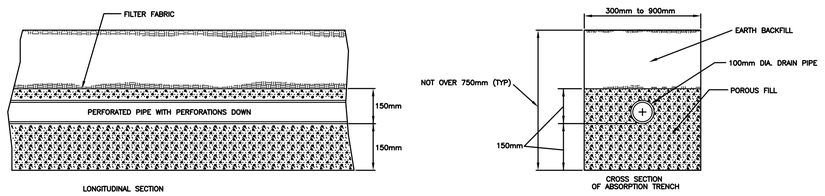

DISPOSAL FIELD ABSORPSION TYPE

N.T.S.

COMMONWEALTH OF PENNSYLVANIA
REGISTERED PROFESSIONAL
GREGORY P. HYNES
ENGINEER
044310-E

SYMBOL	DESCRIPTION	DATE	APR

DESIGNED BY: BAKER
DATE: 04-01-08
DWN BY: ---
SUBMITTED BY: BAKER
CHK BY: GPH
FILE NO.:

Baker
MICHAEL BAKER JR., INC.
Airside Business Park
100 Airside Drive
Moon Township, Pa. 15108
(412) 269-6300

US Army Corps of Engineers
Transatlantic Programs Center

AFGHAN NATIONAL BORDER POLICE
AFGHANISTAN NATIONAL BORDER POLICE UNIT FACILITY
BORDER POLICE COMPANY

CIVIL DETAILS

SHEET REFERENCE NUMBER:
S-C2

READY TO ADVERTISE SUBMISSION

March 06, 2008 10:42:39 a.m. LOGIN NAME: jbaker
Drawing: K:\PROJECTS\USACE-TAC\INT\REF-05-D-0002 AE & CM CONTRACT\TASK ORDER 0032 - DESIGN BORDER POLICE UNIT FACILITIES, AFGHANISTAN\DRAWINGS\BCP UNIT\BCP_S-C2.DWG-(SHEET)

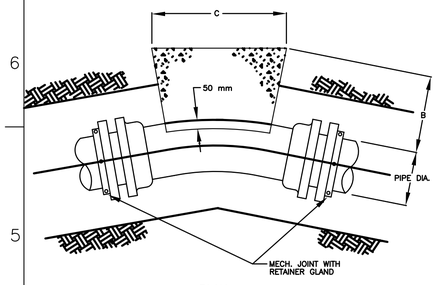

PLAN

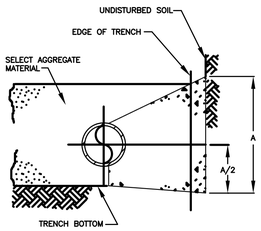

SECTION

	PIPE DIAMETER			
	100&150	200	250	300
A	510	560	610	660
B	300	300	355	380
C	300	400	480	530

WRAP FITTINGS & JOINT WITH TAR PAPER PRIOR TO POURING CONCRETE

CONCRETE ANCHORS FOR HORIZONTAL 22-1/2° & 11-1/4° BENDS

N.T.S.

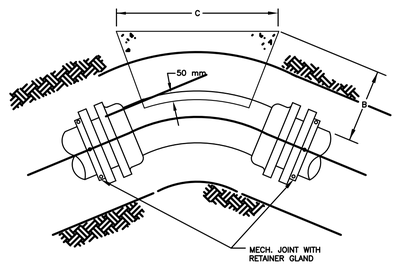

PLAN

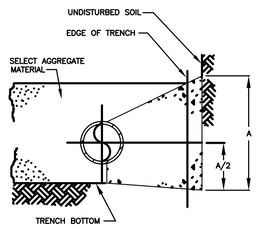

SECTION

	PIPE DIAMETER			
	100&150	200	250	300
A	460	530	610	710
B	300	300	355	380
C	380	510	640	710

WRAP FITTINGS & JOINT WITH TAR PAPER PRIOR TO POURING CONCRETE

CONCRETE ANCHORS FOR HORIZONTAL 45° BENDS

N.T.S.

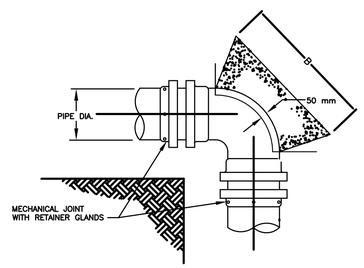

PLAN

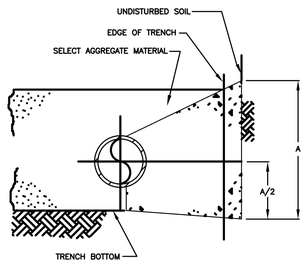

SECTION

	PIPE DIAMETER			
	100&150	200	250	300
A	460	610	710	920
B	610	710	710	920

WRAP FITTINGS & JOINT WITH TAR PAPER PRIOR TO POURING CONCRETE

CONCRETE ANCHORS FOR HORIZONTAL 90° BENDS

N.T.S.

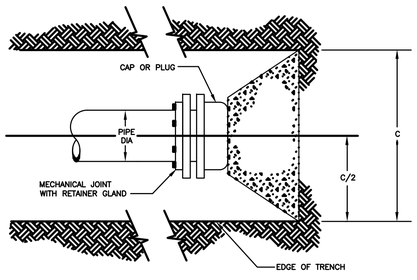

PLAN

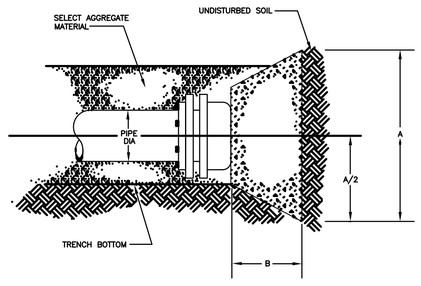

ELEVATION

	PIPE DIAMETER			
	100&150	200	250	300
A	460	610	760	760
B	300	380	460	460
C	460	610	1000	1000

WRAP FITTING & JOINT WITH TAR PAPER PRIOR TO POURING CONCRETE

CONCRETE ANCHORS FOR DEAD ENDS

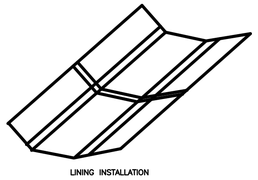

LINING INSTALLATION

CHANNEL CROSS-SECTION

COLLECTION CHANNEL

N.T.S.

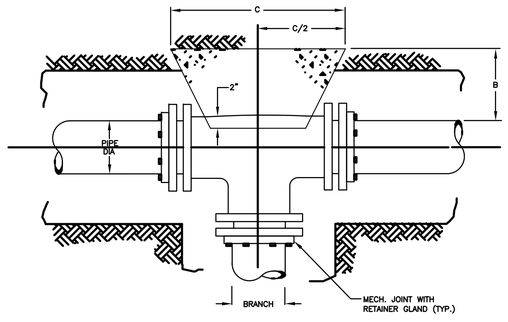

PLAN

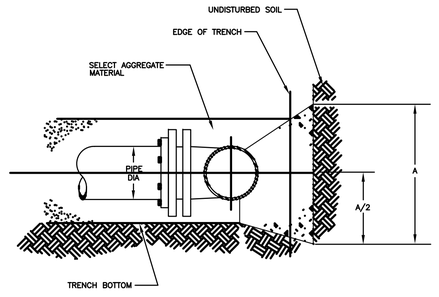

ELEVATION

	PIPE DIAMETER			
	100&150	200	250	300
A	460	610	760	920
B	300	380	380	380
C	460	610	760	920

WRAP FITTING & JOINT WITH TAR PAPER PRIOR TO POURING CONCRETE

D = APPROX. VOLUME OF CONC. IN C.Y.

CONCRETE ANCHORS FOR TEES

N.T.S.

GREGORY P. HYNES
ENGINEER
044512-E
REGISTERED PROFESSIONAL
COMMONWEALTH OF PENNSYLVANIA

SYMBOL	DESCRIPTION	DATE	APR

DESIGNED BY: BAKER | DATE: 04-01-08
DWN BY: --- | SUBMITTED BY: BAKER
CHK BY: GPH | FILE NO.:

Airside Business Park
100 Airside Drive
Moon Township, Pa. 15108
(412) 269-6300
Baker
MICHAEL BAKER JR., INC.
US Army Corps
of Engineers
Transatlantic Programs
Center

AFGHAN NATIONAL BORDER POLICE
AFGHANISTAN NATIONAL
BORDER POLICE UNIT FACILITY
BORDER POLICE COMPANY
CIVIL DETAILS

SHEET REFERENCE NUMBER:
S-C3

READY TO ADVERTISE SUBMISSION

March 06, 2008 10:42:29 a.m. LOGIN NAME: j.miller
Drawing: K:\PROJECTS\USACE-TAC\WP1EN-05-D-0002 AE & CM CONTRACT\TASK ORDER 0032 - DESIGN BORDER POLICE UNIT FACILITIES AFGHANISTAN\DRAWINGS\DCP UNIT\DCP_S-CIVIL.dwg (SHEET)

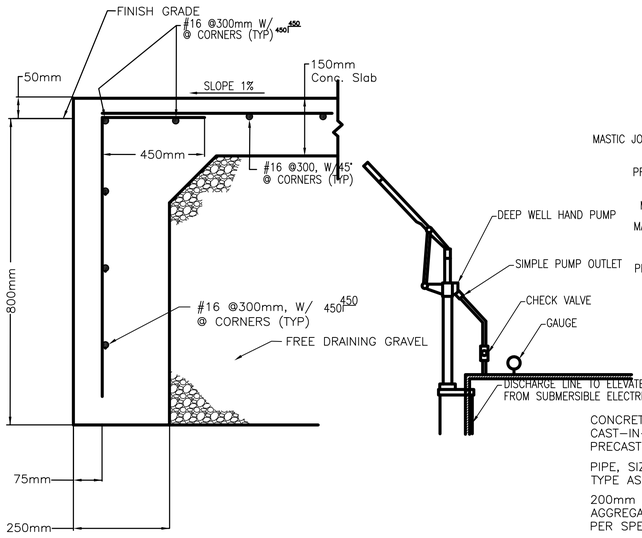

TYPICAL EQUIPMENT PAD
N.T.S.

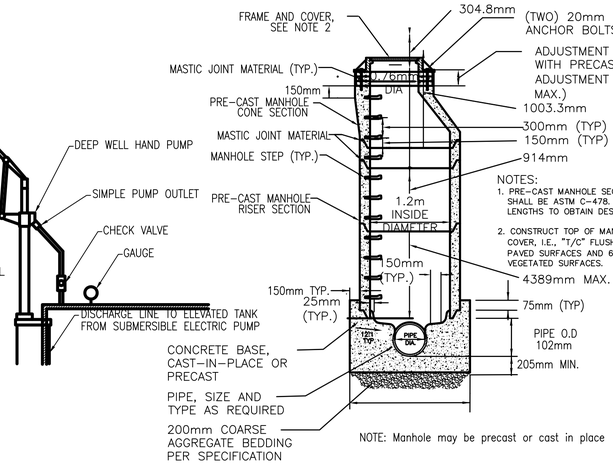

HAND PUMP INSTALLATION DETAIL
N.T.S.

1.2m I.D. SANITARY MANHOLE
NTS

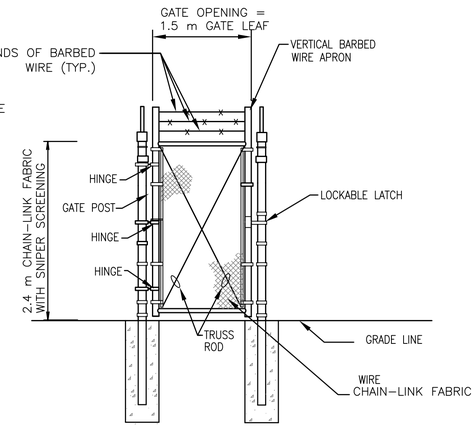

MAN GSTE
NTS

GATE POST SCHEDULE	
GATE LEAF WIDTH (NOMINAL)	OUTSIDE DIMENSION (NOMINAL)
1.8 m OR LESS	75 mm O.D.
1.8 m TO 4 m	100 mm O.D.

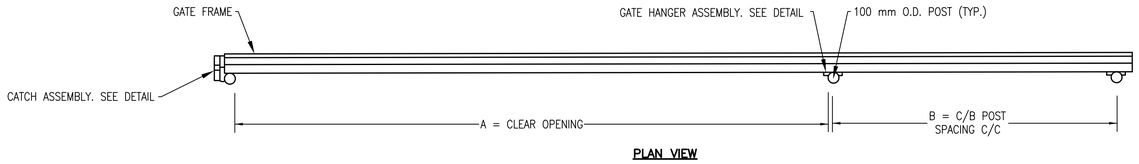

PLAN VIEW

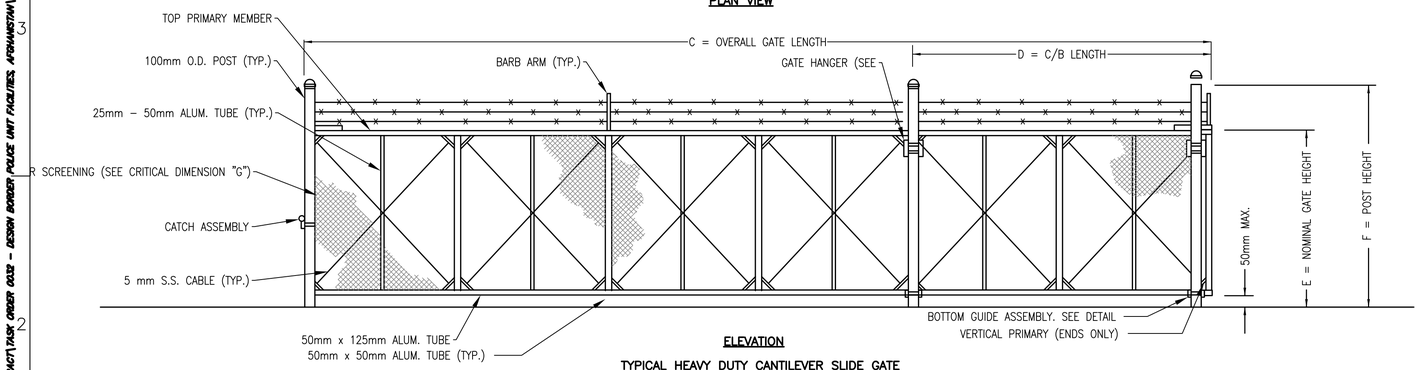

ELEVATION

TYPICAL HEAVY DUTY CANTILEVER SLIDE GATE
N.T.S.

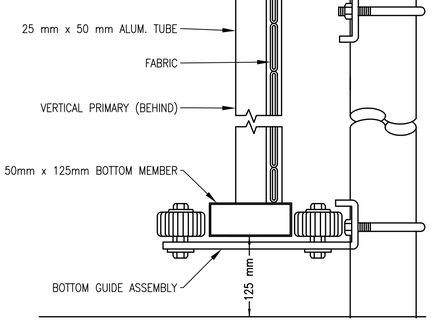

ASSEMBLY SECTION
N.T.S.

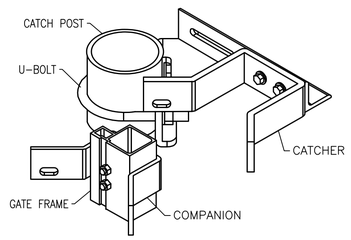

CATCH ASSEMBLY
N.T.S.

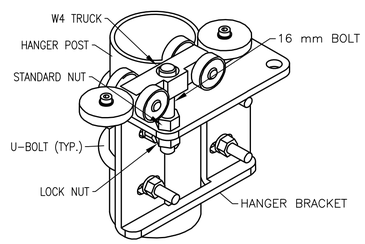

GATE HANGER ASSEMBLY
N.T.S.

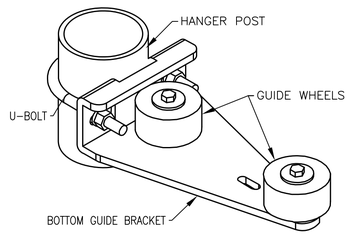

BOTTOM GUIDE ASSEMBLY
N.T.S.

GATE NOTES:

DETAILS SHOWN ARE TO CLARIFY REQUIREMENTS AND ARE NOT INTENDED TO LIMIT OTHER TYPE OF FENCE SECTIONS AND METHODS OF INSTALLATION.

SWING GATES SHALL BE CONSTRUCTED WITH DROP RODS, PADLOCKS, LATCH ASSEMBLY AND GATE KEEPERS EXCEPT AS NOTED.

ALL GATE FRAMES SHALL BE A MINIMUM 50 mm NOMINAL (ROUND) OR 50 mm NOMINAL (SQUARE). GATE FRAMES SHALL BE OF WELDED CONSTRUCTION OR SHALL BE ASSEMBLED USING HEAVY FITTINGS. AT CONTRACTOR'S OPTION A WELDED HORIZONTAL BRACE MAY BE USED IN LIEU OF TRUSS RODS TO BRACE ALL WELDED GATE FRAMES. THE CONTRACTOR SHALL BE RESPONSIBLE FOR THE PROPER RIGID CONSTRUCTION OF ALL GATES SUPPLIED.

CONTRACTOR SHALL FOLLOW MANUFACTURER'S SPECIFICATIONS AND GUIDELINES FOR INSTALLATION.

NOTES:

1. BARB ARMS ARE OPTIONAL

2. GATE ELEVATION IS VIEWED FROM THE OUTSIDE OF THE SECURE AREA LOOKING IN.

CRTICAL DIMENSION CHART		
A	CLEAR OPENING	7.3 m
B	COUNTERBALANCE POST SPACING C/C	*
C	OVERALL GATE LENGTH	*
D	COUNTERBALANCE LENGTH	*
E	NOMINAL GATE HEIGHT	2.4m
F	POST HEIGHT	*
G	FABRIC HEIGHT	*

*CRITICAL DIMENSIONS TO BE DETERMINED BY MANUFACTURER. CONTRACTOR TO VERIFY AND COORDINATE MANUFACTURER'S SPECIFICATIONS PRIOR TO PURCHASE AND SHALL FOLLOW MANUFACTURER GUIDELINES DURING INSTALLATION.

GREGORY P. HYNES — COMMONWEALTH OF PENNSYLVANIA — REGISTERED PROFESSIONAL — ENGINEER — 044312-E

SYMBOL	DESCRIPTION	DATE	APR

DESIGNED BY: BAKER
DWN BY: ---
CHK BY: GPH
DATE: 04-01-08
SUBMITTED BY: BAKER
FILE NO.:

Airside Business Park
100 Airside Drive
Moon Township, Pa. 15108
(412) 269-6300
Baker
MICHAEL BAKER JR., INC.
US Army Corps of Engineers
Transatlantic Programs Center

AFGHAN NATIONAL BORDER POLICE
AFGHANISTAN NATIONAL BORDER POLICE UNIT FACILITY
BORDER POLICE COMPANY
CIVIL DETAILS

SHEET REFERENCE NUMBER:
S-C4

READY TO ADVERTISE SUBMISSION

March 24, 2008 3:22:48 pm LOGIN NAME: jjones
Drawing: K:\PROJECTS\USACE-TAC\MAZER-05-D-0002 AE & CM CONTRACT\TASK ORDER 0032 - DESIGN BORDER POLICE UNIT FACILITIES AFGHANISTAN\DRAWINGS\BP UNIT\DET_S-C4.DWG (SHEET)

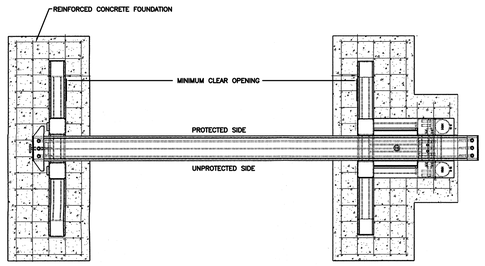

PLAN VIEW

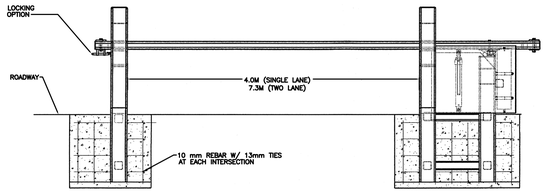

FRONT VIEW

MANUAL BEAM BARRIER
N.T.S.

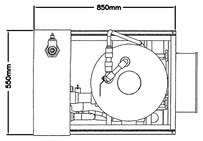

TOP VIEW

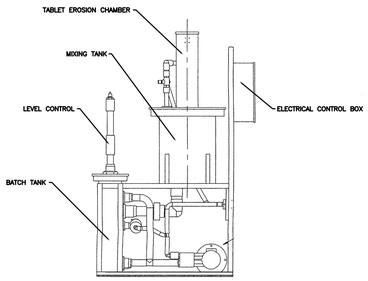

SIDE VIEW

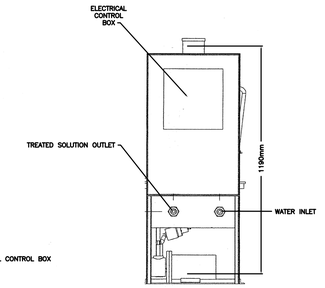

FRONT VIEW

CHLORINE FEED SYSTEM
(Calcium Hypochorite Tablet Feeder)
N.T.S.

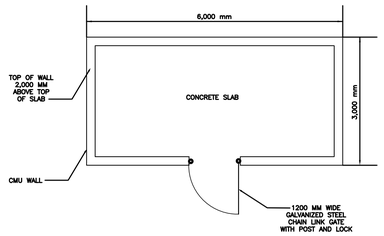

PROPANE STORAGE
N.T.S.

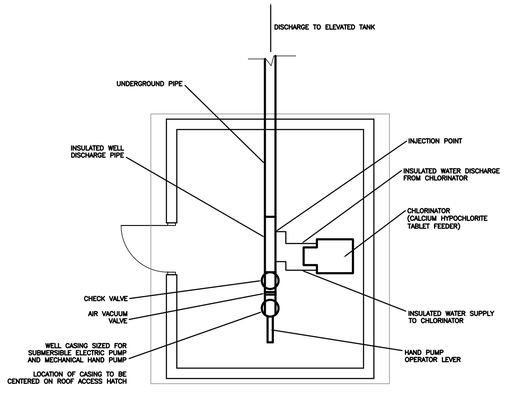

WELL HOUSE INTERIOR PLAN
N.T.S.

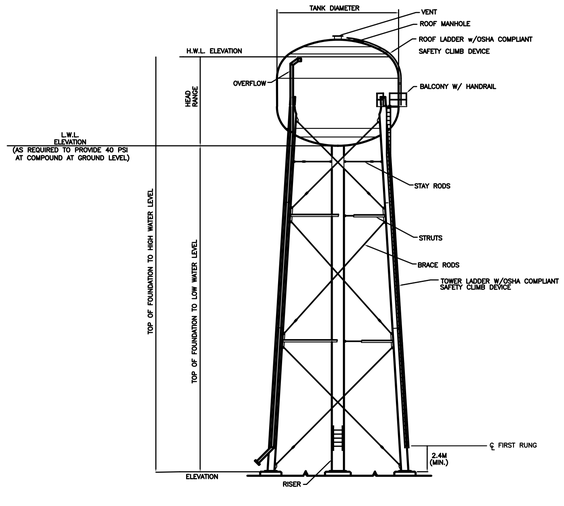

ELEVATION
N.T.S.

NOTES:

DESIGN:
TANK AND TOWER SHALL BE DESIGNED, FABRICATED AND ERECTED IN ACCORDANCE WITH AWWA D100-96 AND PROJECT SPECIFICATIONS. CONTRACTOR RESPONSIBLE FOR FOUNDATION DESIGN AND PAINTING OF TANK INTERIOR AND EXTERIOR. TANK AND FOUNDATION DESIGN SHALL BE BASED ON ANTICIPATED SEISMIC CONDITIONS CONSISTENT WITH APPLICABLE AWWA REQUIREMENTS.

MATERIALS:
STEEL PLATE: ASTM A283 GR. C / A36
STRUCTURAL STEEL SHAPES: ASTM A36
BRACE RODS AND STAY RODS: ASTM A36
LADDER RUNGS: ASTM A706

- ACCESSORIES SHOWN ON ELEVATION DRAWING ARE ROTATED FOR CLARITY.
- ALL HANDRAILS, PLATFORM LANDINGS, WALKWAYS, LADDERS, AND SAFETY CLIMB DEVICES SHALL CONFORM WITH CURRENT OSHA STANDARDS.
- SEE PROJECT SPECIFICATIONS FOR SHOP AND FIELD PAINT REQUIREMENTS.
- STERILIZE TANK IN ACCORDANCE WITH AWWA C652-92 AND PROJECT SPECIFICATIONS.

MINIMUM REQUIRED TANK VOLUMES:

BCP COMPOUNDS	= 14,200 liters (3,750 GALLONS)
BP BATTALION	= 11,550 liters (3,050 GALLONS)
BP COMPANY	= 17,600 liters (4,650 GALLONS)
BP BATTALION & COMPANY	= 29,150 liters (7,700 GALLONS)

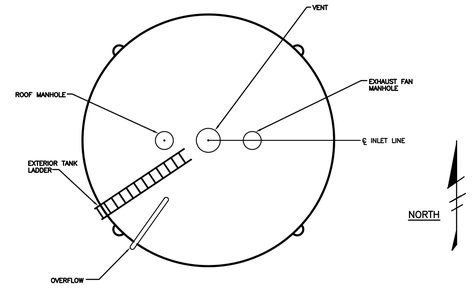

ORIENTATION
N.T.S.

GREGORY P. HYMES
ENGINEER
LAVLE
PROFESSIONAL
REGISTERED
COMMONWEALTH OF PENNSYLVANIA

SYMBOL	DESCRIPTION	DATE	APR

DESIGNED BY: BAKER
DRN BY: ---
CHK BY: GPH
DATE: 04-01-08
SUBMITTED BY: BAKER
FILE NO.:

Airside Business Park
100 Airside Drive
Moon Township, Pa. 15108
(412) 269-6300
Baker
MICHAEL BAKER JR., INC.

US Army Corps of Engineers
Transatlantic Programs Center

AFGHAN NATIONAL BORDER POLICE
AFGHANISTAN NATIONAL BORDER POLICE UNIT FACILITY
BORDER POLICE COMPANY
CIVIL DETAILS

SHEET REFERENCE NUMBER:
S-C5

READY TO ADVERTISE SUBMISSION

March 06, 2008 10:43:20 a.m. LOGIN NAME: jsiller
Drawing: K:\PROJECTS\USACE-TAC\W912ER-05-D-0002 AE & CM CONTRACT\TASK ORDER 0032 - DESIGN BORDER POLICE UNIT FACILITIES, AFGHANISTAN\DRAWINGS\BCP UNIT\BCP_S-C5.DWG-(SHEET)

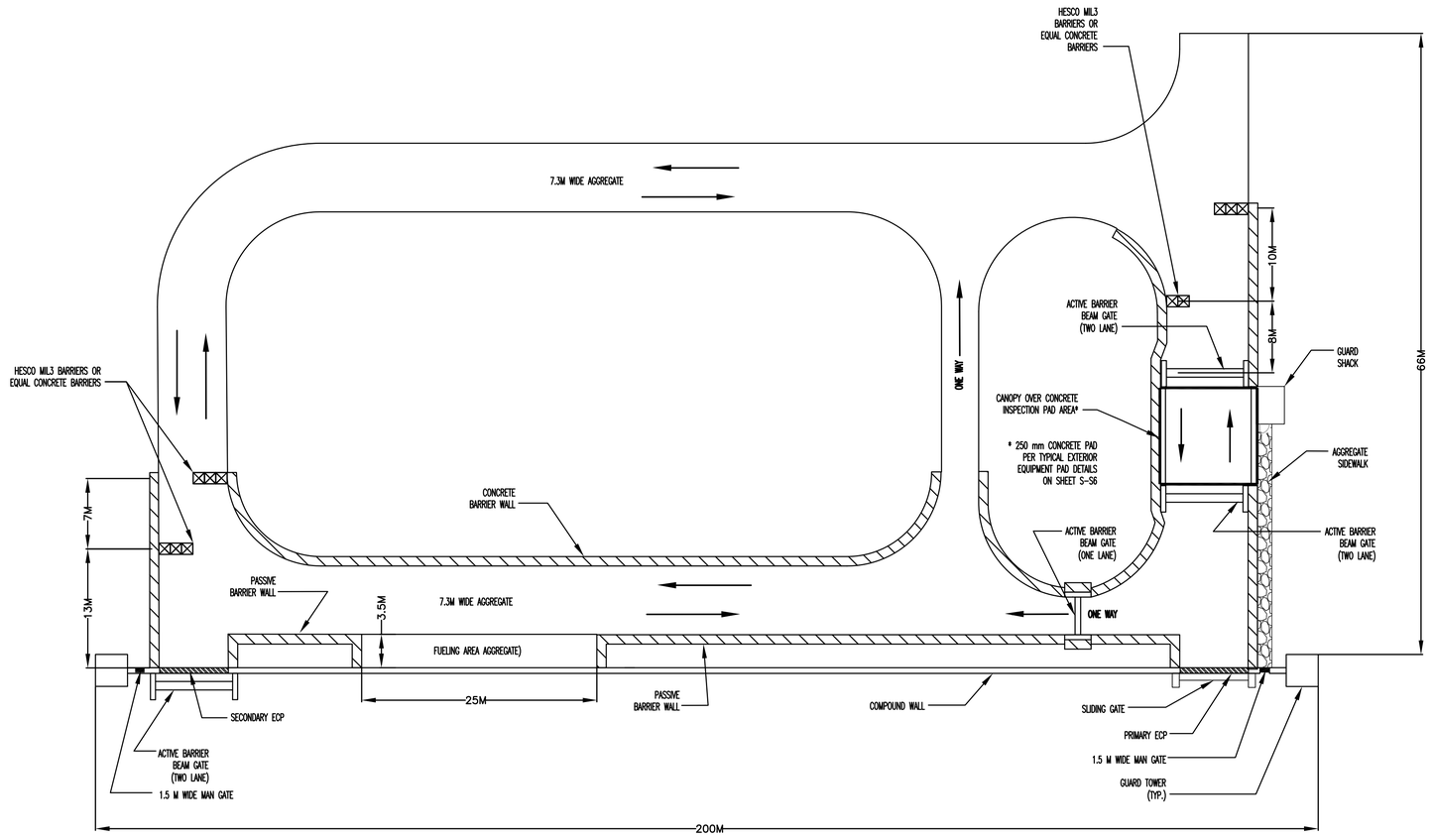

PRIMARY ECP DETAIL

N.T.S.

March 06, 2008 10:43:10 a.m. LOGIN NAME : jpillar
Drawing: K:\PROJECTS\USACE-TAC\W912ER-05-D-0002 AE & CM CONTRACT\TASK ORDER 0032 - DESIGN BORDER POLICE UNIT FACILITIES, AFGHANISTAN\DRAWINGS\BCP UNIT\BCP_S-C6.DWG-(SHEET)

COMMONWEALTH OF PENNSYLVANIA
REGISTERED PROFESSIONAL
GREGORY P. HYNES
ENGINEER
044310-E

SYMBOL	DESCRIPTION	DATE	APR

DESIGNED BY: BAKER
DATE: 04-01-08
DWN BY: ---
SUBMITTED BY: BAKER
CHK BY: GPH
FILE NO.:

Baker
MICHAEL BAKER JR., INC.
Airside Business Park
100 Airside Drive
Moon Township, Pa. 15108
(412) 269-6300

US Army Corps of Engineers
Transatlantic Programs Center

AFGHAN NATIONAL BORDER POLICE
AFGHANISTAN NATIONAL BORDER POLICE UNIT FACILITY
BORDER POLICE COMPANY

CIVIL DETAILS

SHEET REFERENCE NUMBER:
S-C6

READY TO ADVERTISE SUBMISSION

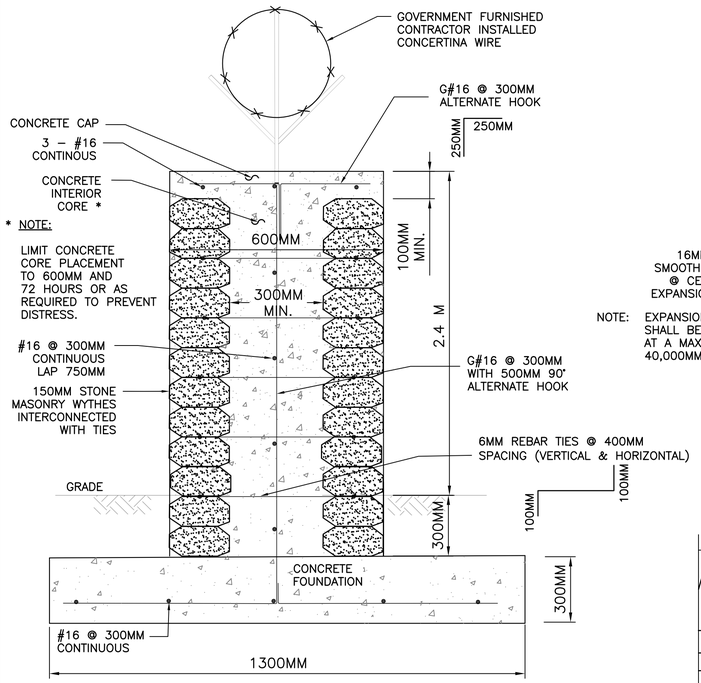

SECTION A
NOT TO SCALE

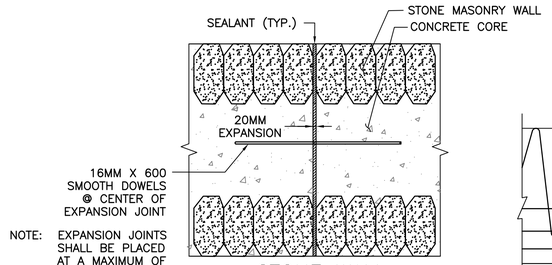

STONE WALL
EXPANSION JOINT DETAIL
NOT TO SCALE

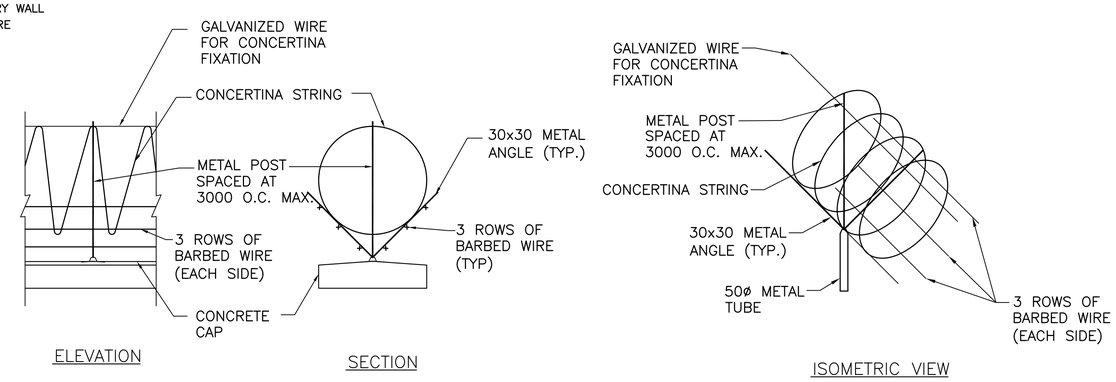

CONCERTINA STRING & BARBED WIRE DETAILS
NOT TO SCALE

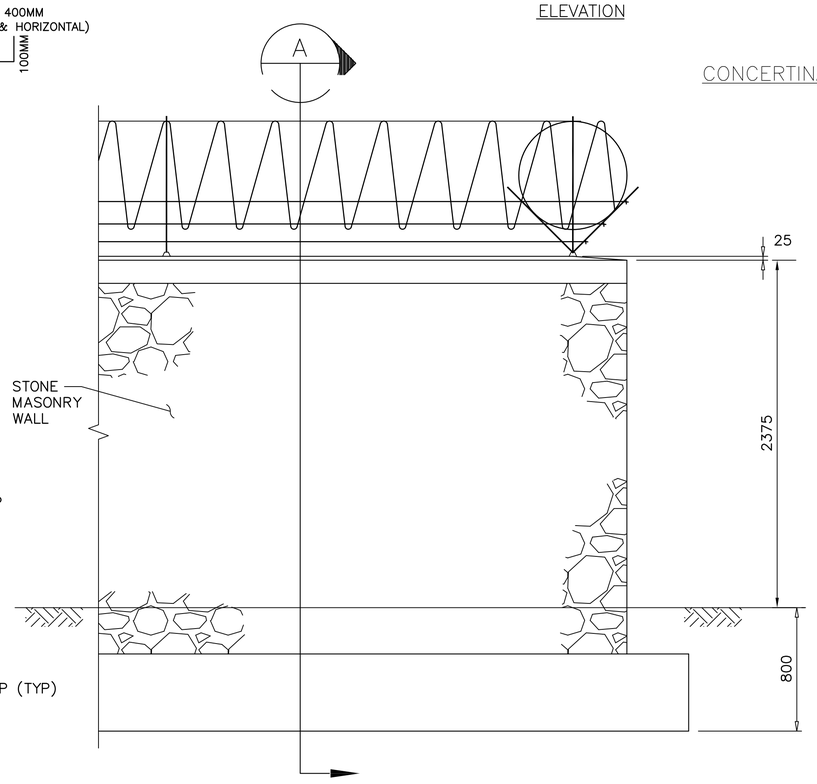

ELEVATION B
NOT TO SCALE

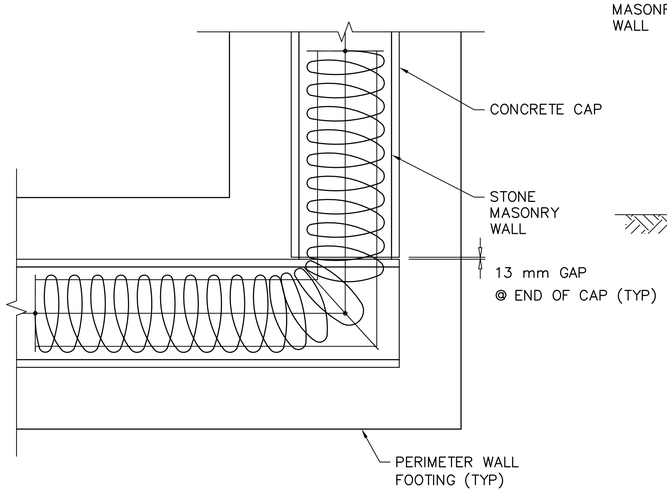

PERIMETER – STONE WALL CORNER – PLAN
(END CONDITION SIMILAR)
NOT TO SCALE

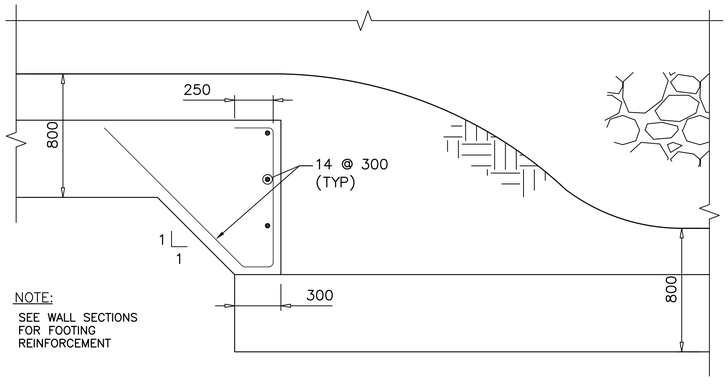

STEPPED FOOTING DETAIL FOR
GRADE CHANGE GREATER THAN 15 DEGREES
NOT TO SCALE

GREGORY P. HYNES
PENNSYLVANIA

SYMBOL	DESCRIPTION	DATE	APR

DESIGNED BY: BAKER
DWN BY: ---
CHK BY: GPH
DATE: 04-01-08
SUBMITTED BY: BAKER
FILE NO.:

Baker
MICHAEL BAKER JR., INC.
Airside Business Park
100 Airside Drive
Moon Township, Pa. 15108
(412) 269-6300

US Army Corps of Engineers
Transatlantic Programs Center

AFGHAN NATIONAL BORDER POLICE
AFGHANISTAN NATIONAL BORDER POLICE UNIT FACILITY
BORDER POLICE COMPANY
CIVIL DETAILS

SHEET REFERENCE NUMBER:
S-C7

READY TO ADVERTISE SUBMISSION

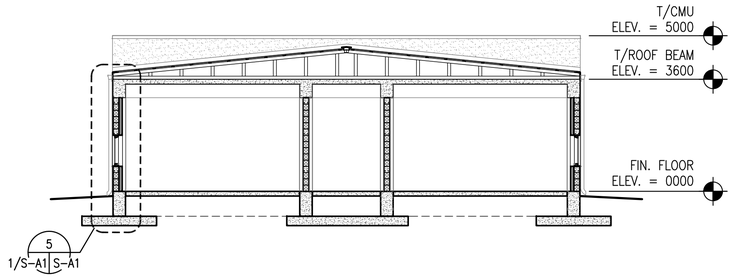

TRANSVERSE SECTION W/ INTERIOR WALLS ONE STORY BUILDING WITH BEARING WALLS

1 S-A1 SCALE: 1:100

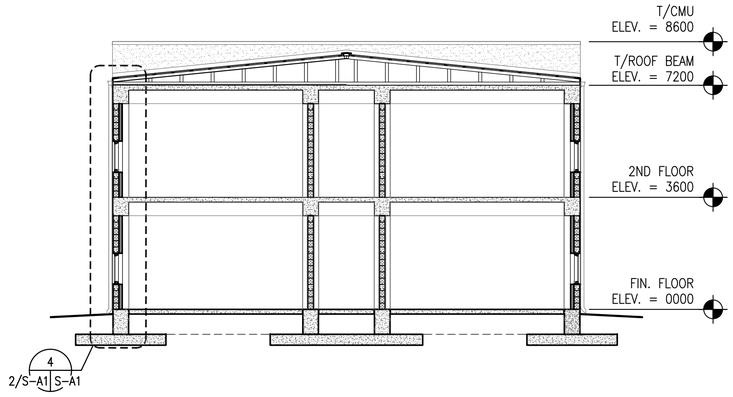

TRANSVERSE SECTION ADMINISTRATION BUILDING

2 S-A1 SCALE: 1:100

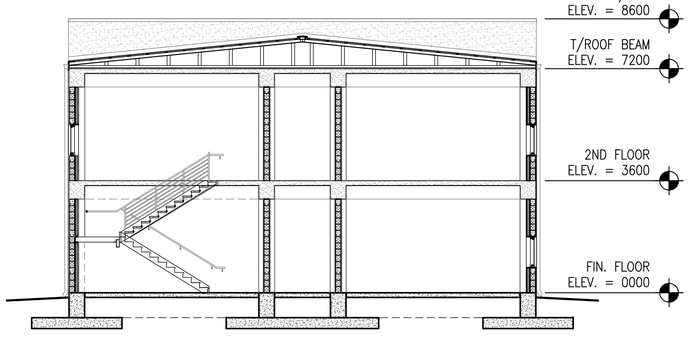

TRANSVERSE SECTION ADMINISTRATION BUILDING

3 S-A1 SCALE: 1:100

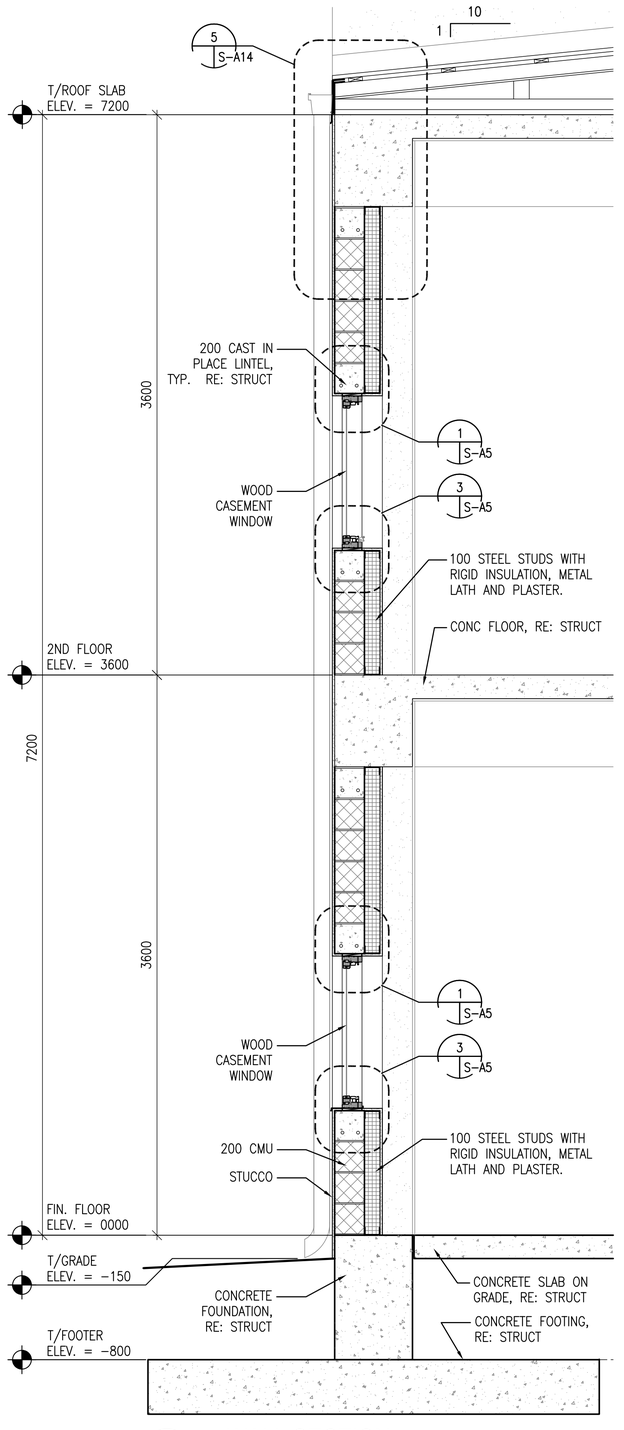

WALL SECTION

4 2/A-S1 S-A1 SCALE: 1:20

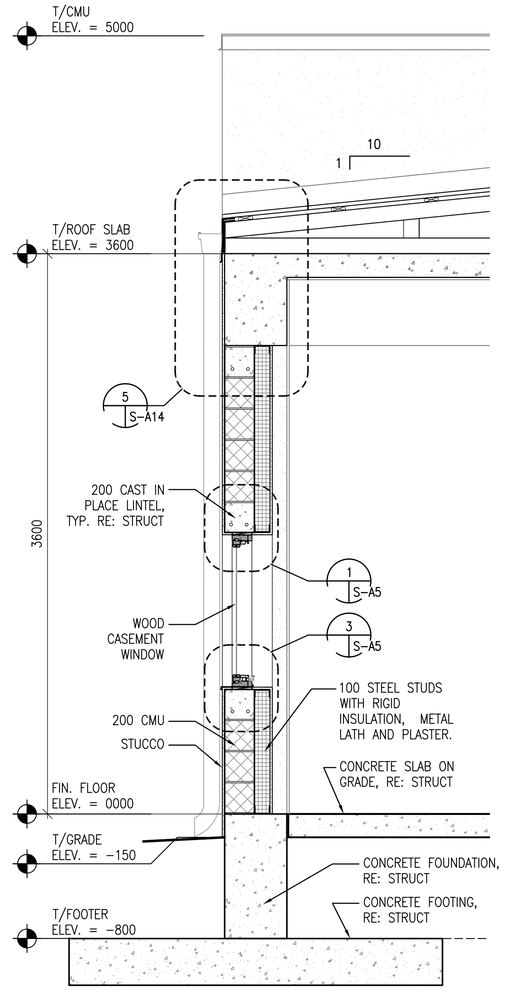

WALL SECTION

5 1/A-S1 S-A1 SCALE: 1:20

UNLESS OTHERWISE NOTED, LINEAR DIMENSIONS SHOWN ARE IN MILLIMETERS (MM)

0 .40 .80 1.20 1.60 2.00
1:20

1 0 1 2 3 4 5 6 7 8 9
1:100

SOUTH CAROLINA STATE OF REGISTERED ARCHITECT
KEVIN R. CHAFIN
N. Charleston, SC
6374

SYMBOL	DESCRIPTION	DATE	APR

DESIGNED BY: BAKER
DRN BY: KJG
CHK BY: KRC
DATE: 04-01-08
SUBMITTED BY: BAKER
FILE NO.:

Airside Business Park
100 Airside Drive
Moon Township, Pa. 15108
(412) 269-6300
MICHAEL BAKER JR., INC.

US Army Corps of Engineers
Transatlantic Programs Center

AFGHAN NATIONAL BORDER POLICE
AFGHANISTAN NATIONAL BORDER POLICE UNIT FACILITY
BORDER POLICE COMPANY

STANDARD TRANSVERSE BUILDING SECTIONS AND WALL SECTIONS

SHEET REFERENCE NUMBER:
S-A1

READY TO ADVERTISE SUBMISSION

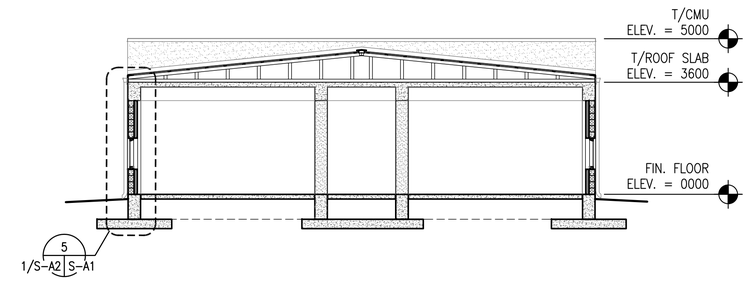

TRANSVERSE SECTION
OPEN BARRACKS BUILDING

1 S-A2 SCALE: 1:100

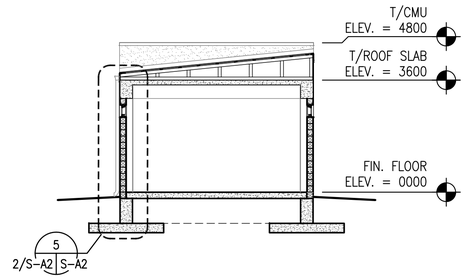

TRANSVERSE SECTION
LATRINE, SHOWER, LAUNDRY, AND ABLUTION BUILDING

2 S-A2 SCALE: 1:100

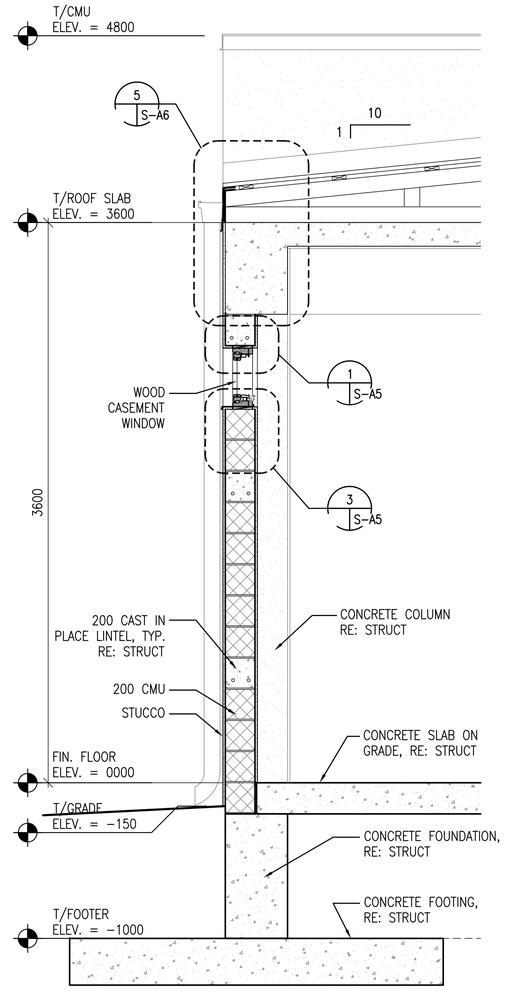

WALL SECTION

5 2/S-A2 S-A2 SCALE: 1:20

UNLESS OTHERWISE NOTED, LINEAR DIMENSIONS SHOWN ARE IN MILLIMETERS (MM)

0 .40 .80 1.20 1.60 2.00
1:20

1 0 1 2 3 4 5 6 7 8 9
1:100

SOUTH CAROLINA STATE REGISTERED ARCHITECT
KEVIN R. CHAFIN
N. Charleston, SC
6374

SYMBOL	DESCRIPTION	DATE	APR

DESIGNED BY: BAKER
DRN BY: KJG
CHK BY: KRC
DATE: 04-01-08
SUBMITTED BY: BAKER
FILE NO.:

Airside Business Park
100 Airside Drive
Moon Township, Pa. 15108
(412) 269-6300
Baker
MICHAEL BAKER JR., INC.
US Army Corps of Engineers
Transatlantic Programs Center

AFGHAN NATIONAL BORDER POLICE
AFGHANISTAN NATIONAL BORDER POLICE UNIT FACILITY
BORDER POLICE COMPANY

STANDARD TRANSVERSE BUILDING AND WALL SECTIONS

SHEET REFERENCE NUMBER:
S-A2

READY TO ADVERTISE SUBMISSION