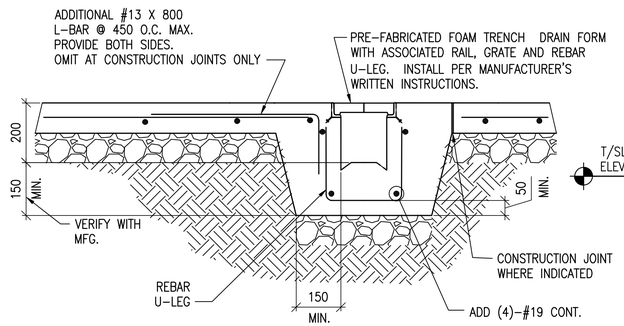

1 B-S1 S-S7 **SECTION** SCALE: 1:10

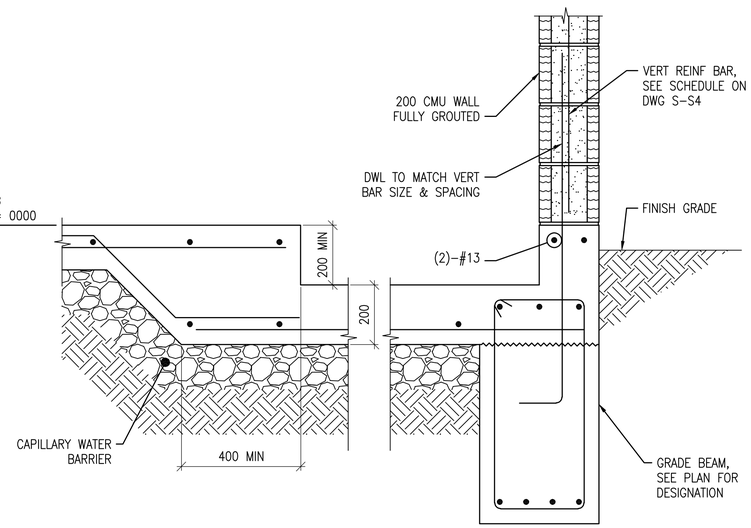

3 D-S1 S-S7 **SECTION** SCALE: 1:10

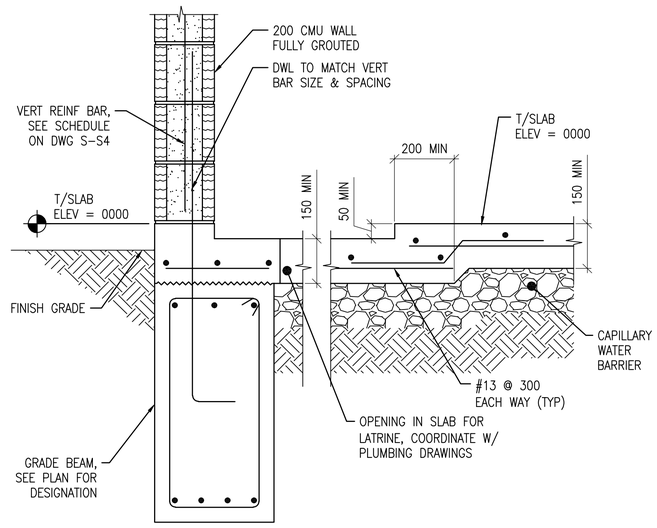

5 D-S1 S-S7 **SECTION** SCALE: 1:10

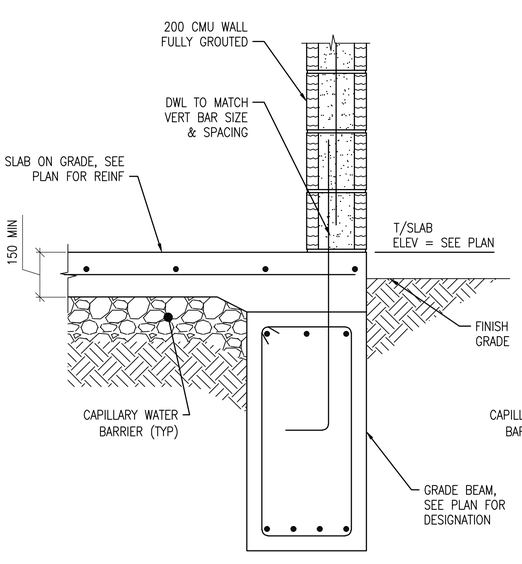

2 D-S1 S-S7 **SECTION** SCALE: 1:10

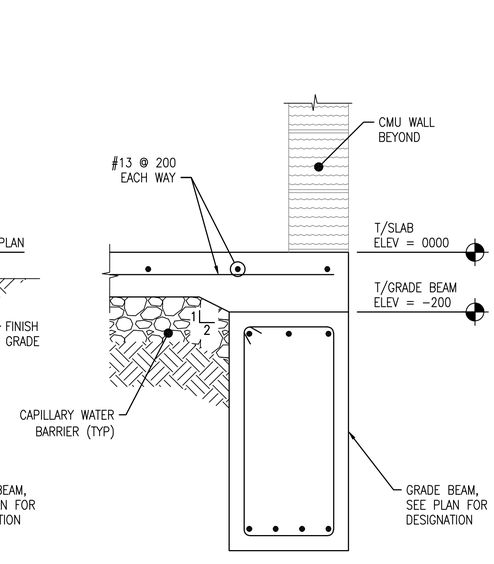

4 D-S1 S-S7 **SECTION** SCALE: 1:10

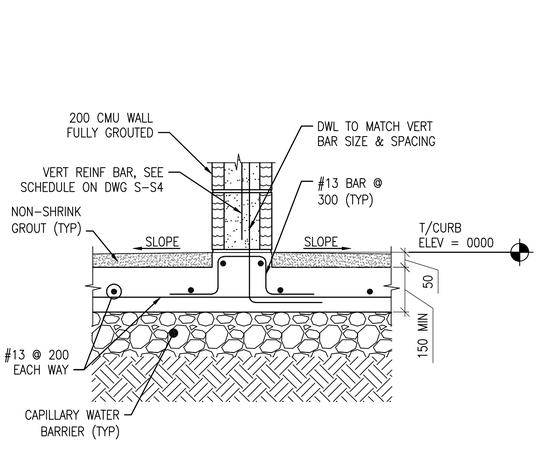

6 D-S1 S-S7 **SECTION** SCALE: 1:10

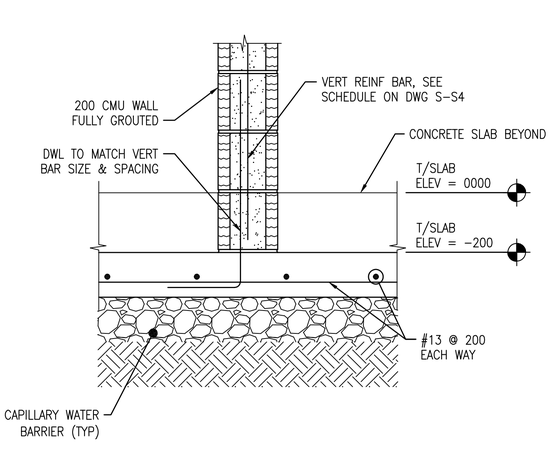

7 D-S1 S-S7 **SECTION** SCALE: 1:10

UNLESS OTHERWISE NOTED, LINEAR DIMENSIONS SHOWN ARE IN MILLIMETERS (MM)

0 .20 .40 .60 .80 1.00
1:10

GEORGIA REGISTERED No. 27141 PROFESSIONAL ENGINEER * CHRISTOPHER W. MAYMORE *

APR	DATE	DESCRIPTION	SYMBOL

DESIGNED BY: Baker | DATE: 04-01-08
DWN BY: RCG | SUBMITTED BY:
CHK BY: CWW | FILE NO.:

Baker MICHAEL BAKER JR, INC
Airside Business Park
100 Airside Drive
Moon Township, Pa. 15108
(412) 269-6300

US Army Corps of Engineers Transatlantic Programs Center

AFGHAN NATIONAL BORDER POLICE
AFGHANISTAN NATIONAL BORDER POLICE UNIT FACILITY
BORDER POLICE COMPANY
SECTIONS AND DETAILS

SHEET REFERENCE NUMBER:
S-S7

READY TO ADVERTISE SUBMISSION

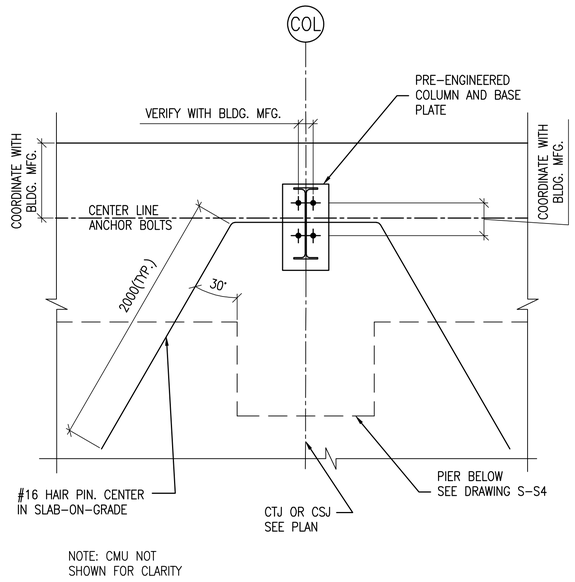

1 B-S1 | S-S8 J-S1 **COLUMN DETAIL** SCALE: 1:10

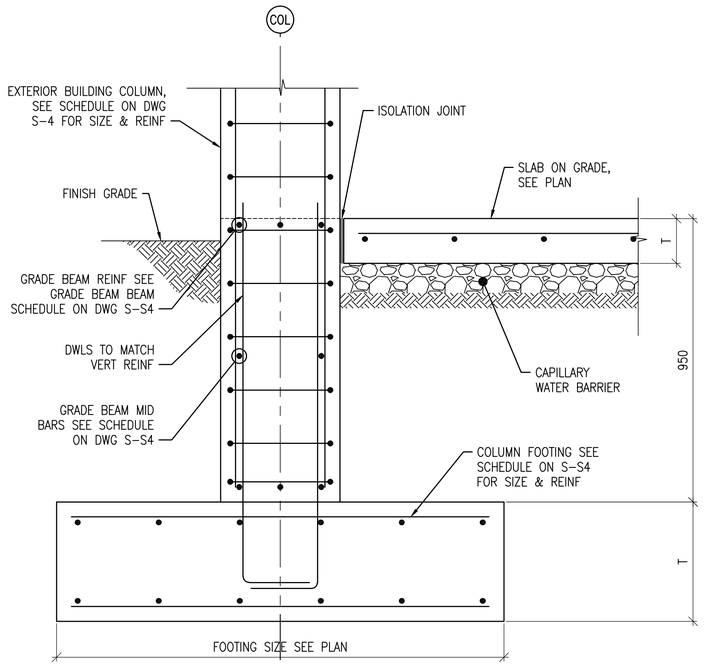

3 A-S1 | S-S8 E-S1 G-S1 **SECTION** SCALE: 1:10

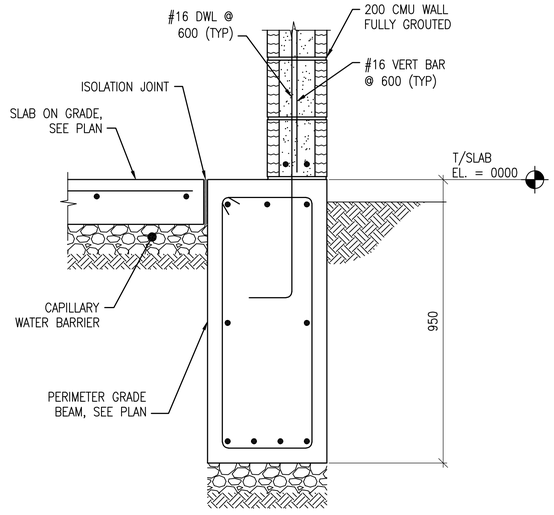

5 A-S1 | S-S8 E-S1 G-S1 **SECTION** SCALE: 1:10

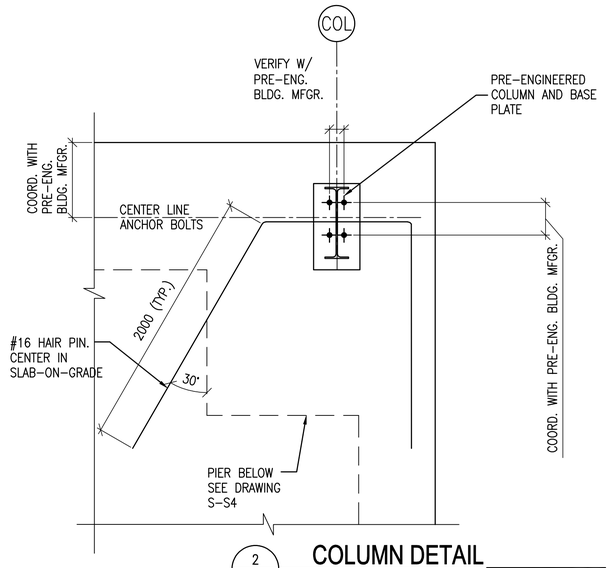

2 B-S1 | S-S8 J-S1 **COLUMN DETAIL** SCALE: 1:10

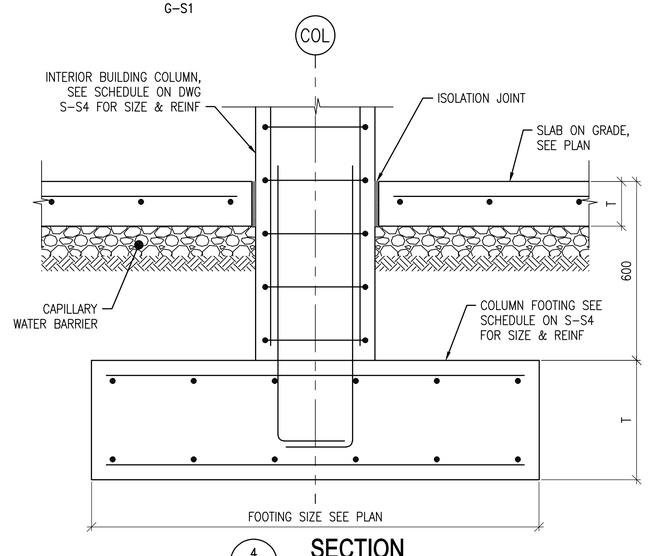

4 A-S1 | S-S8 E-S1 G-S1 **SECTION** SCALE: 1:10

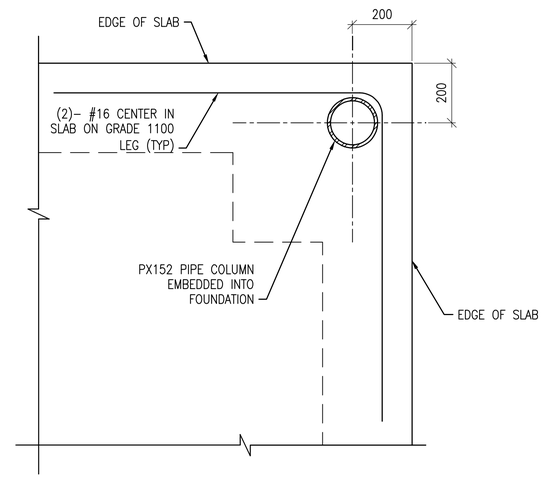

1 B-S1 | S-S8 **CANOPY PIP COLUMN DETAIL** SCALE: 1:10

UNLESS OTHERWISE NOTED, LINEAR DIMENSIONS SHOWN ARE IN MILLIMETERS (MM)

0 .20 .40 .60 .80 1.00
1:10

GEORGIA REGISTERED PROFESSIONAL ENGINEER CHRISTOPHER W. MAITLAND No. 27141

SYMBOL	DESCRIPTION	DATE	APR

DESIGNED BY:	DATE:
BAKER	04-01-08
DWN BY:	SUBMITTED BY:
RCG	
CHK BY:	FILE NO.:
CWW	

Airside Business Park
1000 Airside Drive
Moon Township, Pa. 15108
(412) 269-6300
Baker MICHAEL BAKER JR, INC.

US Army Corps of Engineers
Transatlantic Programs Center

AFGHAN NATIONAL BORDER POLICE
AFGHANISTAN NATIONAL BORDER POLICE UNIT FACILITY
BORDER POLICE COMPANY
SECTIONS AND DETAILS

SHEET REFERENCE NUMBER:
S-S8

READY TO ADVERTISE SUBMISSION

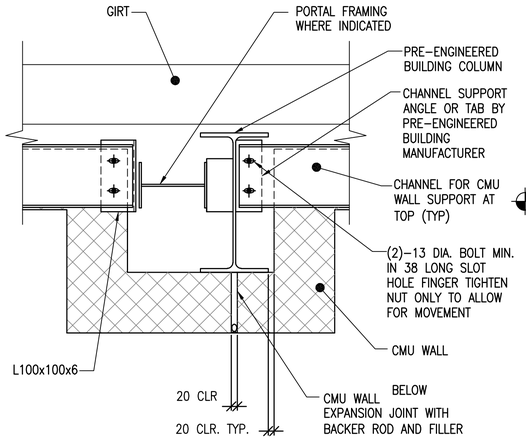

PLAN

DETAIL

1 B-S2 | S-S9 J-S2 SCALE: 1:10

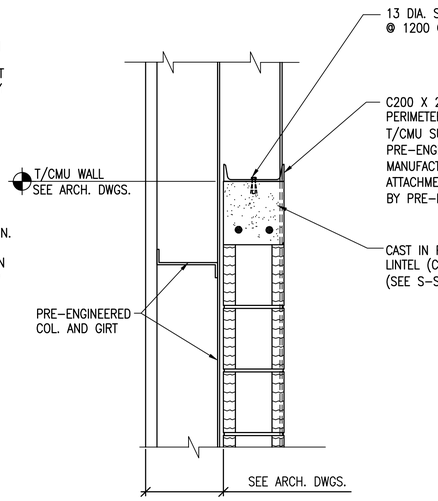

NOTE: VERT. CMU WALL REINF. NOT SHOWN FOR CLARITY

SECTION

3 B-S2 | S-S9 J-S2 SCALE: 1:10

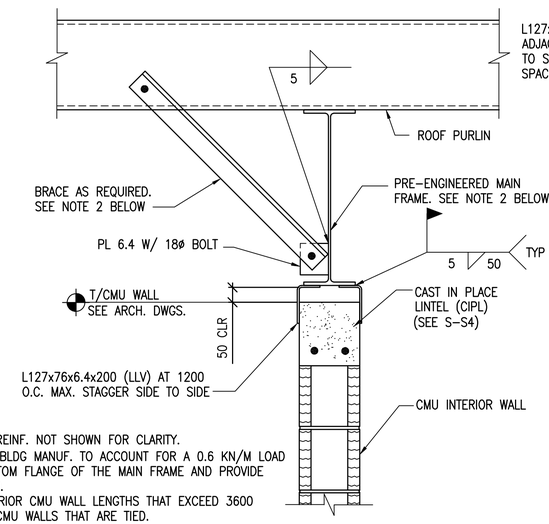

NOTES:

1. VERT. CMU WALL REINF. NOT SHOWN FOR CLARITY.
2. PRE-ENGINEERED BLDG MANUF. TO ACCOUNT FOR A 0.6 KN/M LOAD APPLIED AT THE BOTTOM FLANGE OF THE MAIN FRAME AND PROVIDE BRACING IF REQUIRED.
3. REQUIRED AT INTERIOR CMU WALL LENGTHS THAT EXCEED 3600 BETWEEN OPPOSING CMU WALLS THAT ARE TIED.

SECTION

6 B-S2 | S-S9 SCALE: 1:10

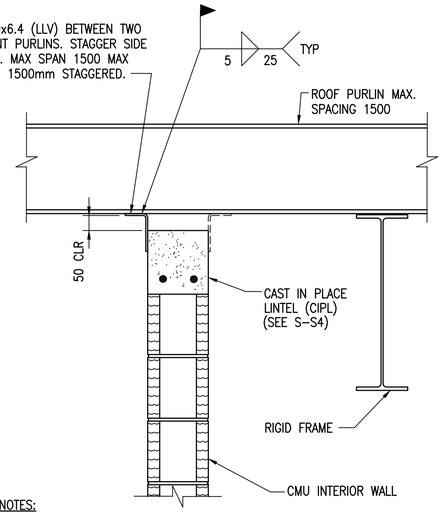

NOTES:

1. VERT. CMU WALL REINF. NOT SHOWN FOR CLARITY.
2. REQUIRED AT INTERIOR CMU WALL LENGTHS THAT EXCEED 3600 BETWEEN OPPOSING CMU WALLS THAT ARE TIED.

SECTION

8 B-S2 | S-S9 SCALE: 1:10

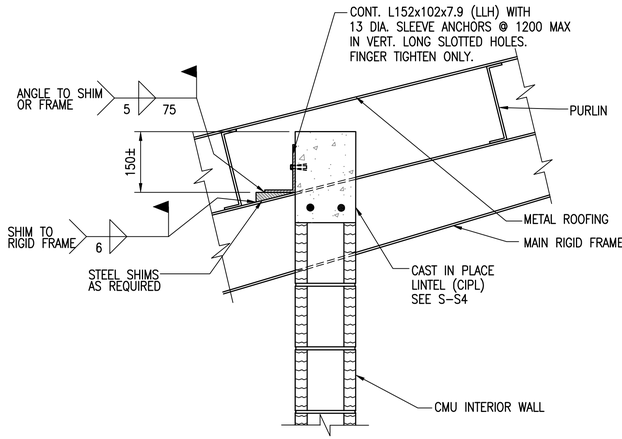

NOTES:

1. VERT. CMU WALL REINF. NOT SHOWN FOR CLARITY.
2. REQUIRED AT INTERIOR CMU WALL LENGTHS ONLY THAT EXCEED 3600mm BETWEEN OPPOSING CMU WALLS THAT ARE TIED.

SECTION

2 B-S2 | S-S9 SCALE: 1:10

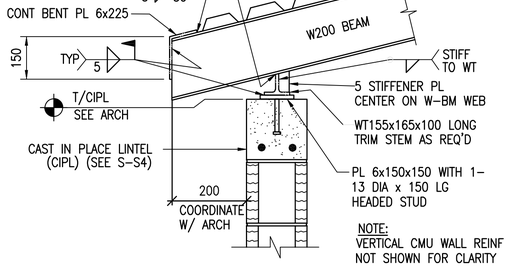

NOTE: VERTICAL CMU WALL REINF NOT SHOWN FOR CLARITY

SECTION

4 B-S2 | S-S9 J-S2 SCALE: 1:10

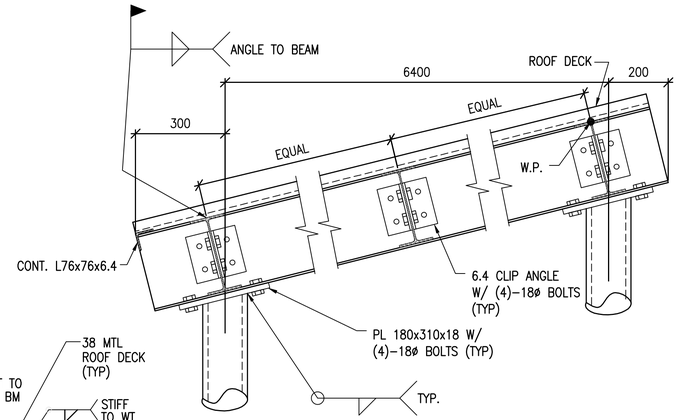

SECTION

9 B-S2 | S-S9 SCALE: 1:10

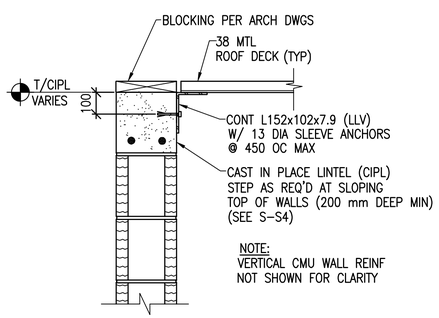

NOTE: VERTICAL CMU WALL REINF NOT SHOWN FOR CLARITY

SECTION

5 B-S2 | S-S9 J-S2 SCALE: 1:10

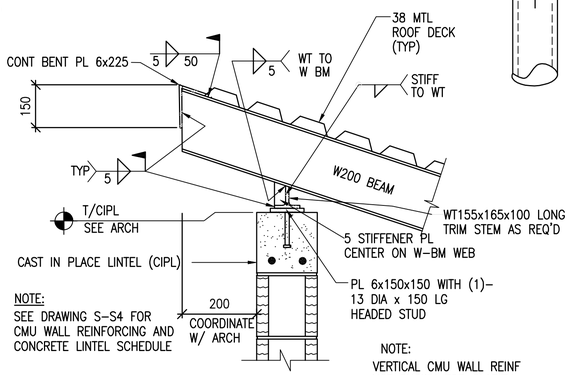

NOTE: SEE DRAWING S-S4 FOR CMU WALL REINFORCING AND CONCRETE LINTEL SCHEDULE

NOTE: VERTICAL CMU WALL REINF NOT SHOWN FOR CLARITY

SECTION

7 B-S2 | S-S9 J-S2 SCALE: 1:10

UNLESS OTHERWISE NOTED, LINEAR DIMENSIONS SHOWN ARE IN MILLIMETERS (MM)

0 .20 .40 .60 .80 1.00

1:10

GEORGIA REGISTERED ENGINEER * MATTHEW CHRISTOPHER WALTMORE * No. 27141 PROFESSIONAL

NO.	DESCRIPTION	DATE
APR		

DESIGNED BY: BAKER
DATE: 04-01-08
DWN BY: RCG
SUBMITTED BY:
CHK BY: CWW
FILE NO.:

Atrium Business Park
400 Holiday Drive
Moon Township, Pa. 15108
(412) 269-6300
Baker MICHAEL BAKER, JR., INC.

US Army Corps of Engineers Transatlantic Programs Center

AFGHAN NATIONAL BORDER POLICE
AFGHANISTAN NATIONAL BORDER POLICE UNIT FACILITY
BORDER POLICE COMPANY

SECTIONS AND DETAILS

SHEET REFERENCE NUMBER:

S-S9

READY TO ADVERTISE SUBMISSION

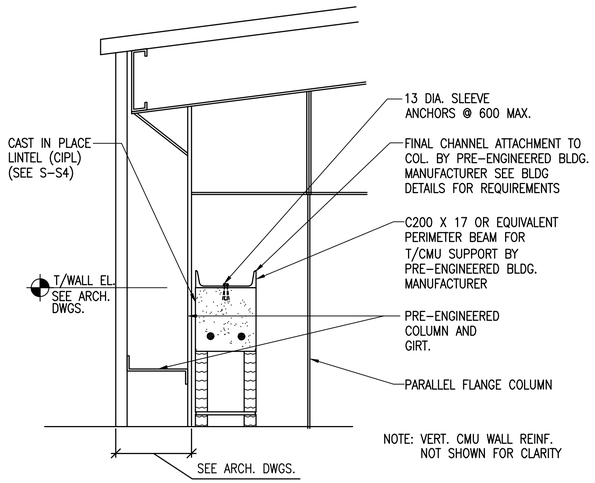

1 SECTION
B-S2 S-S10 SCALE: 1:10
J-S2

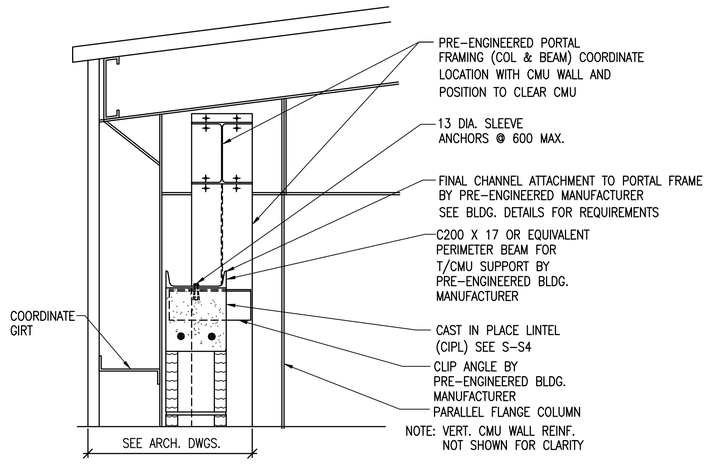

2 SECTION
B-S2 S-S10 SCALE: 1:10
J-S2

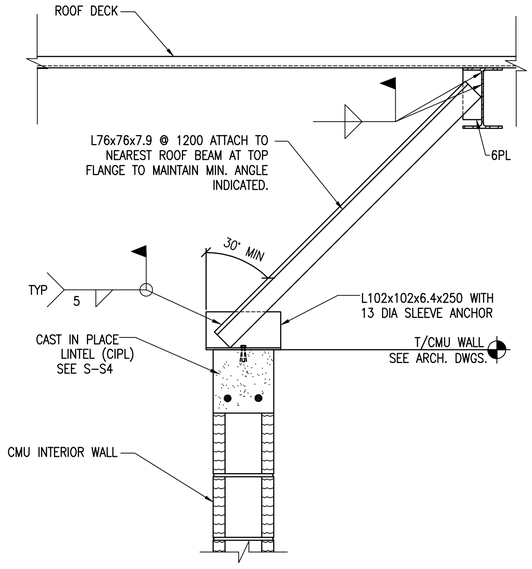

4 SECTION
J-S2 S-S10 SCALE: 1:10

NOTES:

1. VERT. CMU WALL REINF. NOT SHOWN FOR CLARITY.
2. REQUIRED AT INTERIOR CMU WALL LENGTHS THAT EXCEED 3600 BETWEEN OPPOSING CMU WALLS THAT ARE TIED.

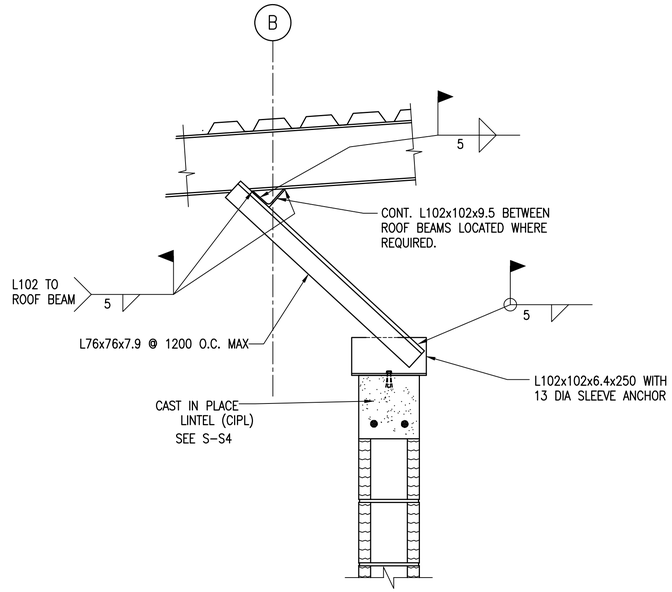

5 SECTION
J-S2 S-S10 SCALE: 1:10

NOTES:

1. VERT. CMU WALL REINF. NOT SHOWN FOR CLARITY.
2. REQUIRED AT INTERIOR CMU WALL LENGTHS THAT EXCEED 3600 BETWEEN OPPOSING CMU WALLS THAT ARE TIED.

UNLESS OTHERWISE NOTED, LINEAR DIMENSIONS SHOWN ARE IN MILLIMETERS (MM)

0 .20 .40 .60 .80 1.00
1:10

GEORGIA REGISTERED No. 27141 PROFESSIONAL ENGINEER * CHRISTOPHER W. WHITMORE *

SYMBOL	DESCRIPTION	DATE	APR

DESIGNED BY: BAKER
DATE: 04-01-08
DWN BY: RCG
SUBMITTED BY:
CHK BY: CWW
FILE NO.:

Baker MICHAEL BAKER JR., INC.
Airside Business Park
100 Airside Drive
Moon Township, Pa. 15108
(412) 269-6300

US Army Corps of Engineers
Transatlantic Programs Center

AFGHAN NATIONAL BORDER POLICE
AFGHANISTAN NATIONAL BORDER POLICE UNIT FACILITY
BORDER POLICE COMPANY
SECTIONS AND DETAILS

SHEET REFERENCE NUMBER:
S-S10

READY TO ADVERTISE SUBMISSION

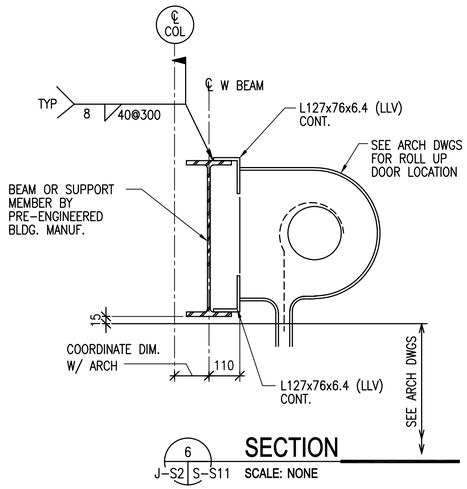

6 J-S2 | S-S11 **SECTION** SCALE: NONE

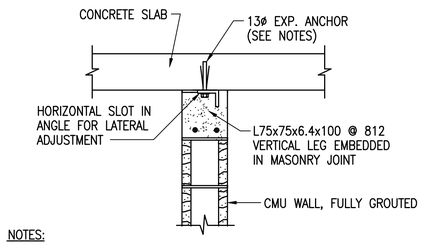

NOTES:
1. EMBED EXPANSION ANCHOR 82 MINIMUM INTO SOLID CONCRETE.

7 S-S11 **SECTION** SCALE: NONE

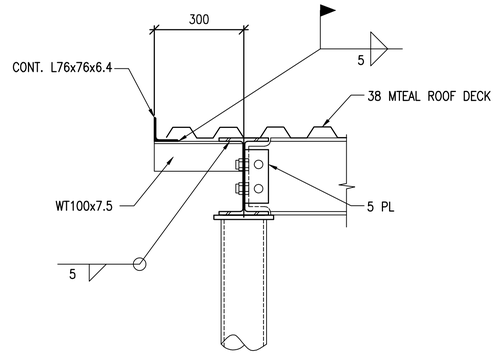

3 J-S2 | S-S11 **SECTION** SCALE: 1:10

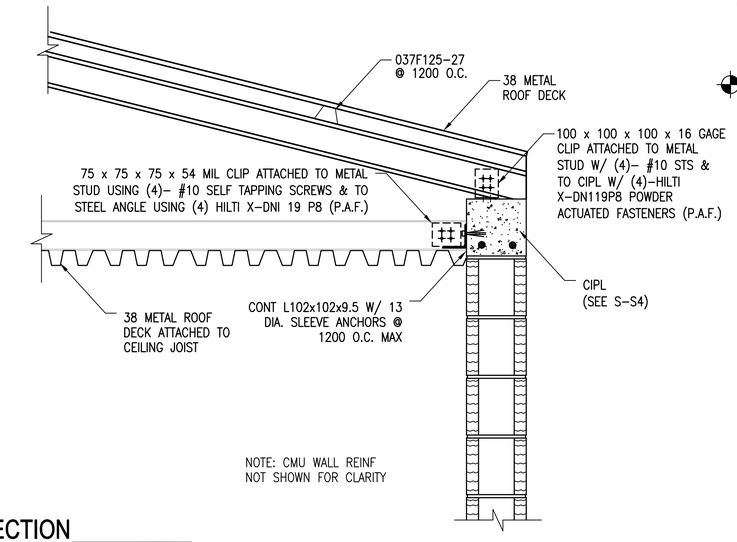

NOTE: CMU WALL REINF NOT SHOWN FOR CLARITY

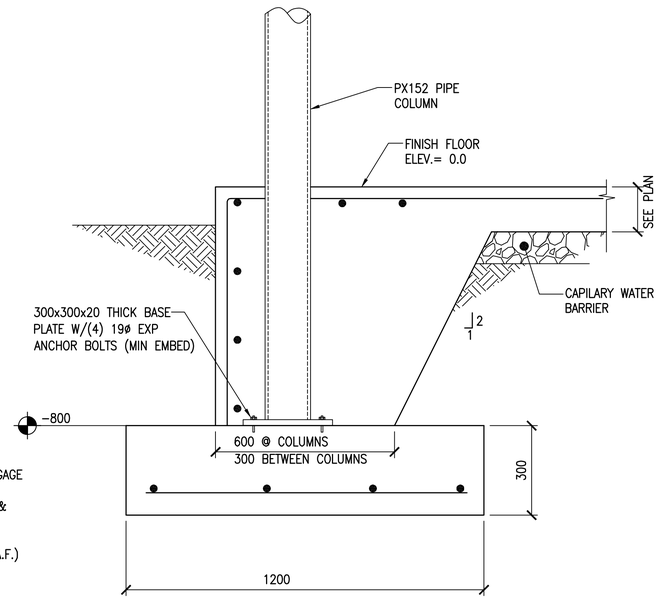

8 B-S2 | S-S11 **SECTION** SCALE: 1:10

UNLESS OTHERWISE NOTED, LINEAR DIMENSIONS SHOWN ARE IN MILLIMETERS (MM)

0 .20 .40 .60 .80 1.00
1:10

GEORGIA REGISTERED No. 27141 PROFESSIONAL ENGINEER * CHRISTOPHER W. MATTMORE *

SYMBOL	DESCRIPTION	DATE	APR

DESIGNED BY: BAKER | DATE: 04-01-08
DWN BY: RCG | SUBMITTED BY:
CHK BY: CWW | FILE NO.:

Baker MICHAEL BAKER JR., INC.
Airside Business Park
100 Airport Drive
Moon Township, Pa. 15108
(412) 269-6300

US Army Corps of Engineers
Transatlantic Programs Center

AFGHAN NATIONAL BORDER POLICE
AFGHANISTAN NATIONAL BORDER POLICE UNIT FACILITY
BORDER POLICE COMPANY
SECTIONS AND DETAILS

SHEET REFERENCE NUMBER:
S-S11

READY TO ADVERTISE SUBMISSION

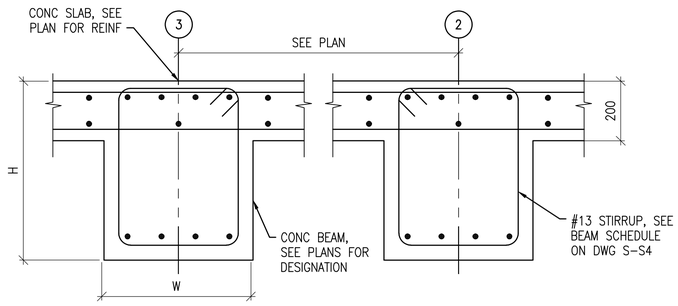

1 SECTION
A-S2 | S-S12 SCALE: 1:10
A-S3
E-S2
G-S2

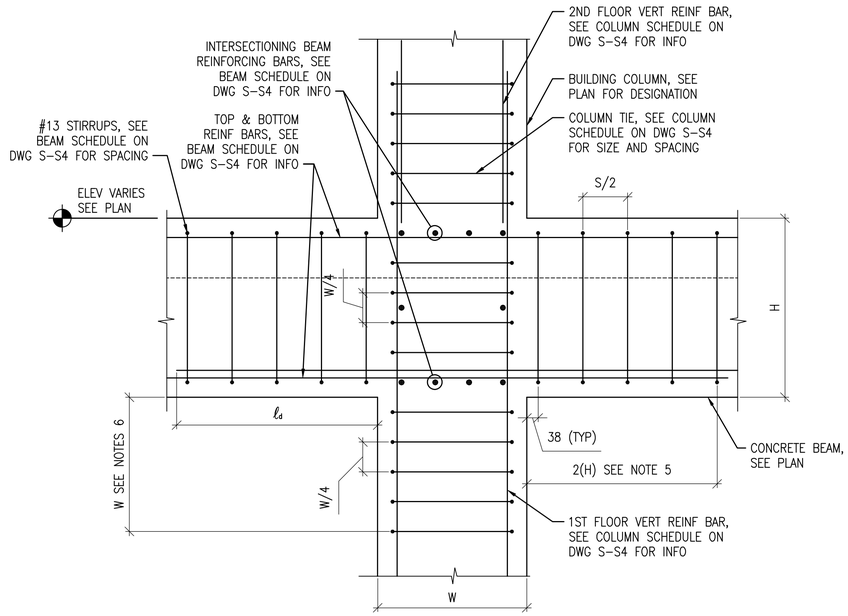

3 SECTION
A-S2 | S-S12 SCALE: 1:10

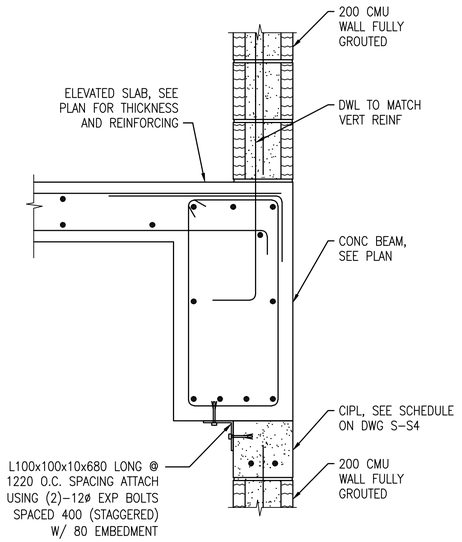

5 SECTION
A-S2 | S-S12 SCALE: 1:10

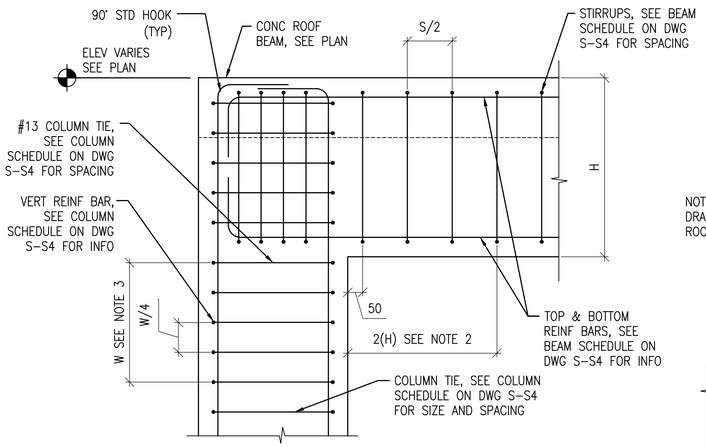

2 SECTION
A-S2 | S-S12 SCALE: 1:10
D-S2
E-S2
G-S2

SECTION NOTES:
1. COLUMN/BEAM REINFORCEMENT AT OUTSIDE CORNERS AND BEAM ENDS.
2. PROVIDE STIRRUPS IN BEAM ENDS AT SPACING OF "S/2" FOR A DIATANCE OF "2(H)" MEASURE FROM FACE OF COLUMN. TYPICAL EACH END OF BEAM.
3. PROVIDE COLUMN TIES AT BEAM/COLUMN JOINTS AT A SPACING OF "W/4" FOR A DISTANCE OF "W" MEASURED FROM BOT OF BEAM.
4. "S" DENOTES TIE SPACING FOR BOTTOM BARS AT COLUMN, SEE SCHEDULE ON DWG S-S4.
4. "W" DENOTES WIDTH OF COLUMN, SEE SCHEDULE ON S-S4

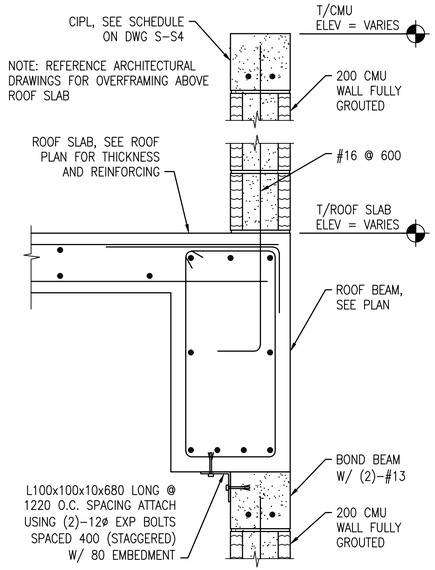

4 SECTION
A-S2 | S-S12 SCALE: 1:10
A-S3
D-S2
E-S2
G-S2

SECTION NOTES:
1. AT EXTERIOR BEAM/COLUMN CONNECTIONS PROVIDE 90° HOOKS ON TOP/BOT BEAM BAR SIMILAR TO SECTION 4 THIS DWG
2. "S" DENOTES TIE SPACING FOR BOTTOM BARS AT COLUMN, SEE SCHEDULE ON DWG S-S4
3. "ℓd" DENOTES LAP LENGTH REQUIRED, SEE SCHEDULE ON DWG S-S4
4. "W" DENOTES WIDTH OF COLUMN, SEE SCHEDULE ON S-S4
5. PROVIDE STIRRUPS IN BEAM ENDS AT SPACING OF "S/2" FOR A DIATANCE OF "2(H)" MEASURE FROM FACE OF COLUMN. TYPICAL EACH END OF BEAM.
6. PROVIDE COLUMN TIES AT BEAM/COLUMN JOINTS AT A SPACING OF "W/4" FOR A DISTANCE OF "W" MEASURED FROM BOT OF BEAM.

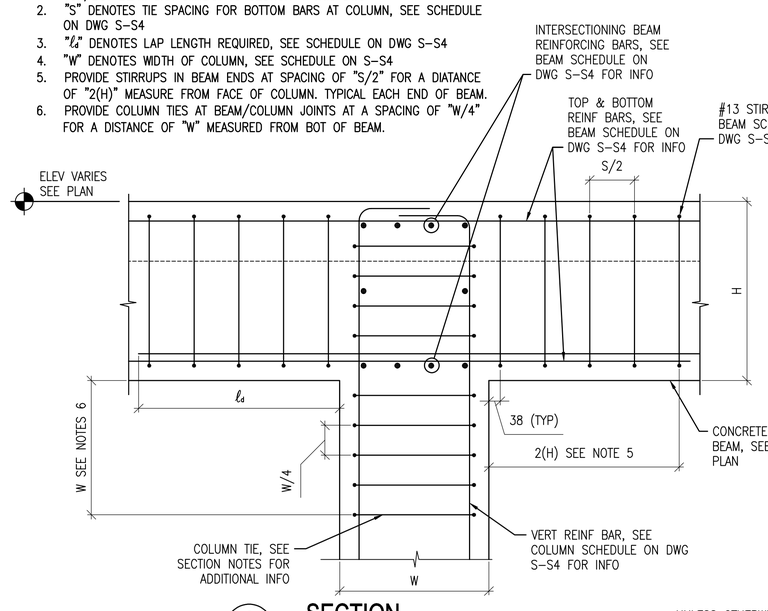

6 SECTION
A-S2 | S-S12 SCALE: 1:10
A-S3
E-S2
G-S2

SECTION NOTES:
1. "S" DENOTES TIE SPACING FOR BOTTOM BARS AT COLUMN, SEE SCHEDULE ON DWG S-S4
2. "ℓd" DENOTES LAP LENGTH REQUIRED, PROVIDE STIRRUPS ALONG LENGTH OF SPLICE, SEE SCHEDULE ON DWG S-S4
3. "W" DENOTES WIDTH OF COLUMN, SEE SCHEDULE ON S-S4
4. PROVIDE STIRRUPS IN BEAM ENDS AT SPACING OF "S/2" FOR A DIATANCE OF "2(H)" MEASURE FROM FACE OF COLUMN. TYPICAL EACH END OF BEAM.
5. PROVIDE COLUMN TIES AT BEAM/COLUMN JOINTS AT A SPACING OF "W/4" FOR A DISTANCE OF "W" MEASURED FROM BOT OF BEAM.
6. FOR ALL OTHER BEAM & COLUMN REINFORCEMENT REQUIREMENTS SEE SCHEDULE ON DWG S-S4.

UNLESS OTHERWISE NOTED, LINEAR DIMENSIONS SHOWN ARE IN MILLIMETERS (MM)

0 .20 .40 .60 .80 1.00
1:10

GEORGIA REGISTERED * MICHAEL CHRISTOPHER WARE * No. 27141 PROFESSIONAL ENGINEER

NO.	DESCRIPTION	DATE	APR

DESIGNED BY: BAKER | DATE: 04-01-08
DWN BY: RCG | SUBMITTED BY:
CHK BY: CWW | FILE NO.:

Baker
MICHAEL BAKER JR., INC.
Airside Business Park
100 Airport Road
Moon Township, Pa. 15108
(412) 269-6300

US Army Corps of Engineers
Transatlantic Programs Center

AFGHAN NATIONAL BORDER POLICE
AFGHANISTAN NATIONAL BORDER POLICE UNIT FACILITY
BORDER POLICE COMPANY

MASONRY SECTIONS AND DETAILS

SHEET REFERENCE NUMBER:
S-S12

READY TO ADVERTISE SUBMISSION

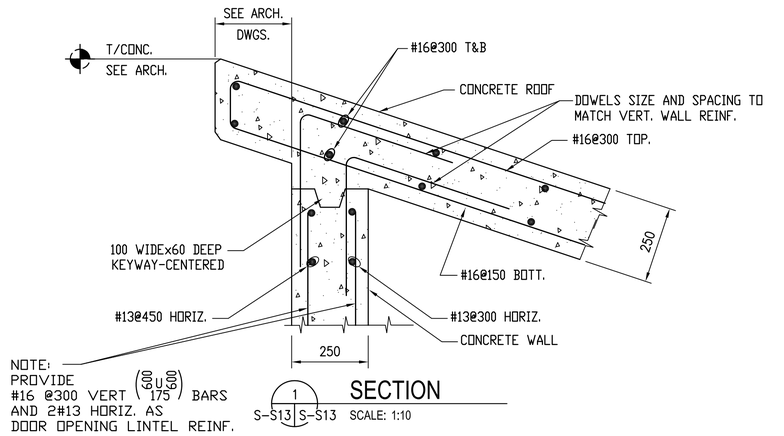

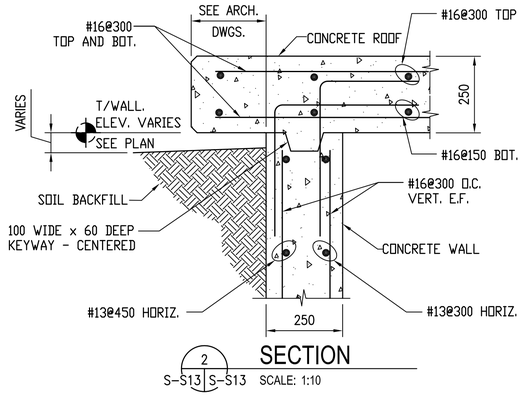

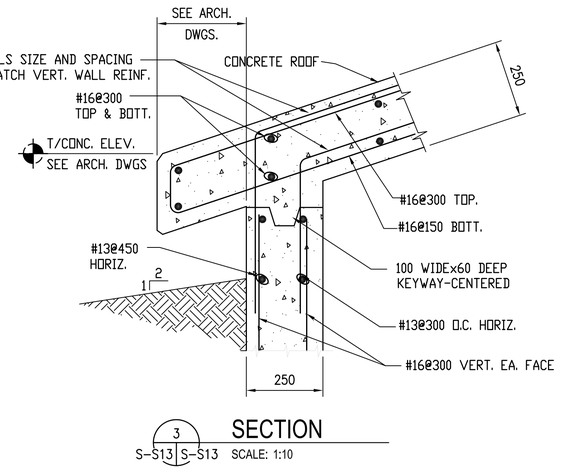

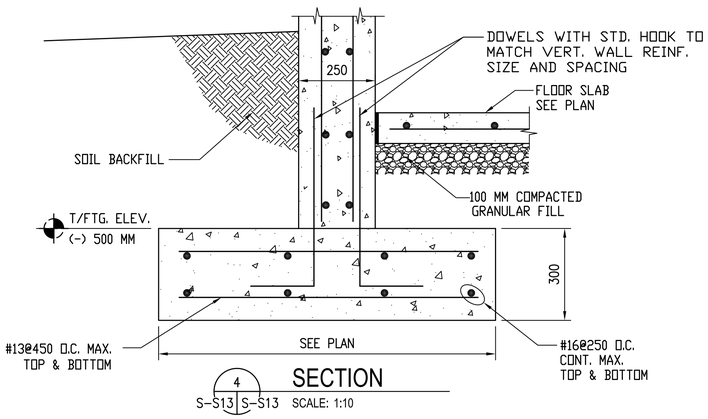

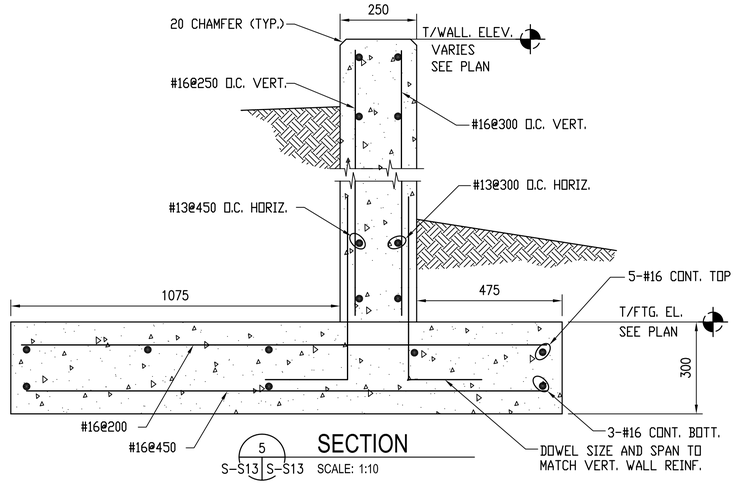

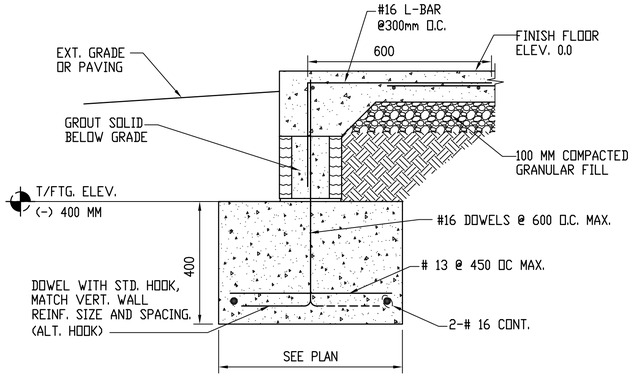

0 .20 .40 .60 .80 1.00
1:10

REGISTERED PROFESSIONAL ENGINEER
RALPH THOMAS DEFFENBAUGH
NO. 041512E
STATE OF PENNSYLVANIA

SYMBOL	DESCRIPTION	DATE	APR

DESIGNED BY: BAKER
DRN BY: JDS
CHK BY: RTD
DATE: 04-01-08
SUBMITTED BY:
FILE NO.:

Baker
MICHAEL BAKER JR., INC.
Airside Business Park
100 Airport Drive
Moon Township, Pa. 15108
(412) 269-6300

US Army Corps
of Engineers
Transatlantic Programs
Center

AFGHAN NATIONAL BORDER POLICE
AFGHANISTAN NATIONAL
BORDER POLICE UNIT FACILITY
BORDER POLICE COMPANY
SECTIONS AND DETAILS

SHEET
REFERENCE
NUMBER:
S-S13

READY TO ADVERTISE SUBMISSION