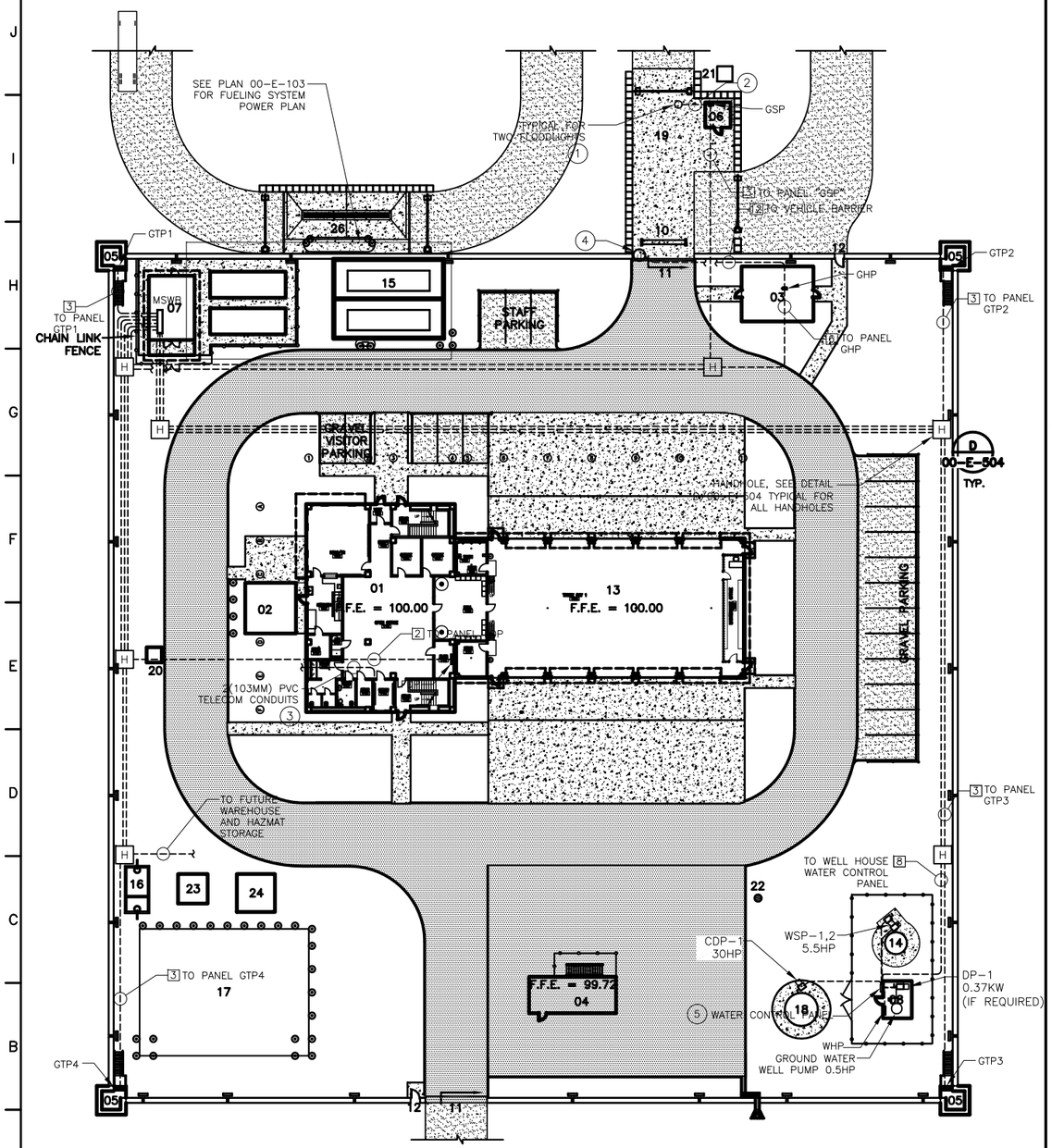

1 ELECTRICAL SITE POWER DISTRIBUTION PLAN

00-E-101 SCALE 1:300

GENERAL NOTES:

1. SEE SHEETS 00-E-001 AND 00-E-002 FOR LEGEND, ABBREVIATIONS, AND GENERAL NOTES.
2. SEE SHEET 00-E-601 FOR SINGLE LINE DIAGRAM.
3. SEE SHEET 00-E-602 FOR SWITCHBOARD MSWB SCHEDULES.
4. COORDINATE ELECTRICAL POWER ROUTING WITH OTHER UTILITIES.
5. COORDINATE WITH THE POWER UTILITY COMPANY FOR UTILITY SERVICE.
6. ALL UNDERGROUND CONDUITS SHALL BE PVC SCHEDULE 80, UNLESS OTHERWISE NOTED.
7. ALL UNDERGROUND CONDUITS SHALL BE 609.6MM (24") OR LESS BELOW FINISHED GRADE.
8. SEE MECHANICAL DRAWINGS FOR LOCATIONS OF FUELING PUMPS.
9. SEE CIVIL DRAWINGS FOR LOCATIONS OF WATER PUMPS.

KEY NOTES:

1. OUTDOOR POLE LIGHTING FIXTURE, METAL HALIDE, 100W/220V/1PH. DARK BRONZE FINISH. MOUNTING HEIGHT TO BE FIELD DETERMINED.
2. TO PANEL "GSP" CIRCUIT#5 IN THE GUARD SHACK VIA A SINGLE POLE LIGHTING SWITCH LOCATED IN THE GUARD SHACK.
3. PROVIDE (2) 103MM (4") EMPTY SCHEDULE 80 PVC CONDUITS EACH WITH NYLON PULL STRING AND END CAP MINIMUM 103MM (24") BELOW FINISHED GRADE BETWEEN THE MAIN TELECOM BOARD AND TELCO SERVICE. COORDINATE CONNECTIONS REQUIREMENTS WITH TELEPHONE COMPANY. FIELD VERIFY EXACT LOCATION OF TELCO SERVICE.
4. PROVIDE FOR THE VEHICLE BARRIER 220V/1PH POWER CIRCUIT #4 IN PANELBOARD "GHP" LOCATED IN THE GUARD HOUSE.
5. 1220MMX1524MMX457MM (48"WX60"LX18"D) WATER CONTROL PANEL, 100A, 3 POLE, 380/220VOLT, 100A MCB, 50HZ, NEMA 4 GASKETED ENCLOSURE. PANEL IS DESIGNED AND PROVIDED BY PUMP MANUFACTURER. SEE CIVIL DRAWINGS.

KEY

01 FIRE STATION
02 WOOD STOVE KITCHEN
03 GUARD HOUSE
04 TRAINING TOWER
05 GUARD TOWER
06 GAURD SHACK
07 SITE POWER HOUSE
08 WELL HOUSE
09 COMMUNICATION TOWER (OPTIONAL)
10 VEHICLE BARRIER
11 SLIDING GATE
12 MAN DOOR
13 VEHICLE / APPARATUS BAY
14 WATER TANK
15 FUEL STORAGE TANK & FUEL POINT
16 SEPTIC TANK
17 LEACH FIELD
18 CISTERN / TANK 95m³
19 ECP
20 TRASH INSIDE
21 TRASH OUTSIDE
22 HYDRANT (TRUCK FILL POINT)
23 FUTURE AGENT & HAZMAT STORAGE SHED
24 FUTURE SUPPLY WAREHOUSE
25 HOSE-DRYING RACK (VERT)
26 FILL POINT

CONDUCTORS & CONDUIT SCHEDULE

	(ENGLISH)	(METRIC)
1	4SETS(4#600 KCMIL, 1#1/0 G, 4"C)	4SETS(4#300MM², 1#70MM² G, 103MMC)
2	4SETS(4#350 KCMIL, 1#1/0 G, 3"C)	4SETS(4#185MM², 1#70MM² G, 78MMC)
3	(4#4 AWG, 1#8G, 1-1/4"C)	(4#25MM², 1#10MM² G, 35MMC)
4	(4#350 KCMIL, 1#2 G, 3"C)	(4#185MM², 1#35MM² G, 78MMC)
5	(3#10 AWG, 1#10G, 3/4"C)	(3#6MM², 1#6MM² G, 21MMC)
6	(4#1 AWG, 1#6G, 2"C)	(4#50MM², 1#16MM² G, 53MMC)
7	(4#2/0 AWG, 1#4G, 2"C)	(4#70MM², 1#25MM² G, 53MMC)
8	(4#250 AWG, 1#2G, 3"C)	(4#150MM² ,1#35MM² G, 78MMC)
9	NOT USED	NOT USED
10	(3#12 AWG, 1#12G, 3/4"C)	(3#4MM², 1#4MM² G, 21MMC)
11	NOT USED	NOT USED
12	NOT USED	NOT USED
13	(2#12 AWG, 1#12G, 3/4"C)	(2#4MM², 1#4MM² G, 21MMC)
14	(3#1 AWG, 1#8G, 1-1/2"C)	(3#50MM², 1#10MM² G, 41MMC)
15	NOT USED	NOT USED
16	(3#2/0 AWG, 1#6G, 2"C)	(3#70MM², 1#16MM² G, 53MMC)

REV	DATE	BY	SUB	APP	DESCRIPTION
0	06/30/10				SITE ADAPT CONSTRUCTION PLANS

DESIGNED G. POOL
DRAWN L. KRAVCHUK
CHECKED D. CRAWFORD
CHARGE D. WHEELER
DATE 30 JUNE 2010

AFGHAN NATIONAL SECURITY FORCE COMPREHENSIVE PLAN FOR FACILITIES DEVELOPMENT

MINISTRY OF INTERIOR (MoI) – AFGHAN NATIONAL POLICE PROVINCIAL FIRE STATION – TYPE-B

ELECTRICAL SITE POWER DISTRIBUTION

SCALE AS SHOWN

PROJECT NO. 6151-08-0328

00-E-101

\\San-fs1\ecc\Engineering\000 FY 2011 RFPs In Progress\AMP\STANDARD TO DEVELOP Fire Station\MACTEC\CAD\00-E-101.dwg 03/14/2011 6:30pm H2ADNUEF

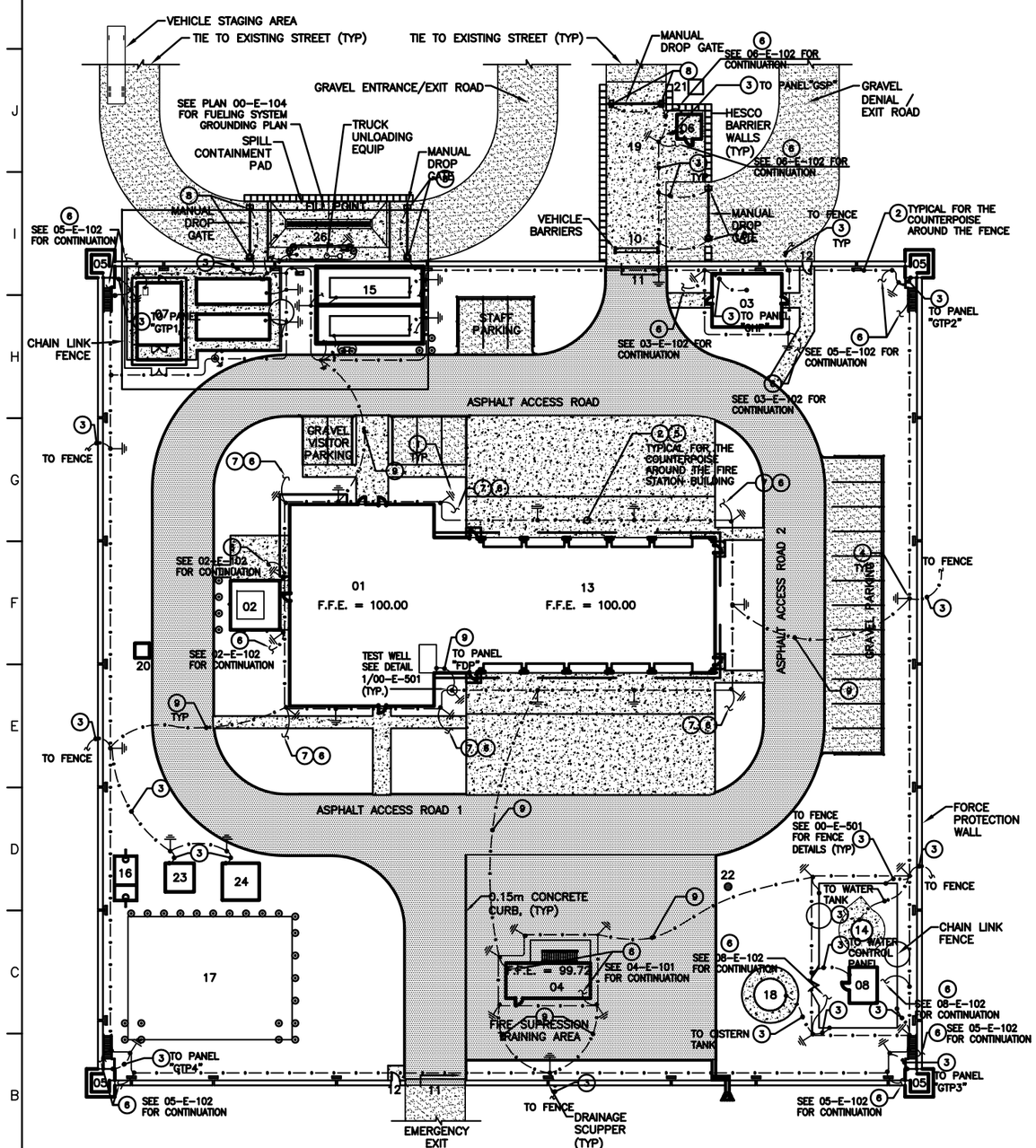

1 SITE GROUNDING PLAN
00-E-102 SCALE 1:300

GENERAL NOTES:

1. SYSTEM GROUND RESISTANCE SHOULD NOT EXCEED 25 OHMS.
2. GROUNDING DESIGN BASED ON SOIL RESISTIVITY OF 500 Ohm-M. RESISTIVELY VARIES FROM SITE TO SITE, CONTRACTOR IS RESPONSIBLE TO MEASURE THE RESISTIVELY. WHEN RESISTIVITY READING DIFFERS FROM 500 Ohm-M, CONTRACTOR SHALL DEVELOP NEW GROUNDING DESIGN.
3. SEE SHEET 00-E-501 FOR GROUNDING DETAILS.
4. REFER TO LIGHTNING PROTECTION SYSTEM FOR EVERY STRUCTURE.
5. ALL STEEL COLUMNS OF EACH STRUCTURE SHALL BE CONNECTED TO THE NEAREST GROUNDING COUNTERPOISE.
6. GROUNDING COUNTERPOISES SHALL BE LOCATED AT LEAST 914.4MM (36 INCHES) FROM BUILDING FOUNDATION. (TYPICAL FOR ALL COUNTERPOISES AROUND BUILDINGS).

KEYED NOTES:

1. PROVIDE AND INSTALL 19MMX3048MM (3/4" X 10'-0") LONG COPPER CLAD STEEL GROUND RODS. SPACING BETWEEN RODS NOT TO EXCEED 6096MM (20'-0") (NON-LINEAR). TYPICAL FOR RODS SHOWN ON THE PLAN, UNLESS NOTED OTHERWISE. IF ROCK IS ENCOUNTERED, GROUND ROD MAY BE INSTALLED WITH A MAXIMUM VARIATION OF 30 DEGREES FROM VERTICAL AND CONTRACTOR SHALL BE PREPARED TO CORE DRILL TO INSTALL GROUND RODS AND BACKFILL WITH GROUND ENHANCEMENT MATERIAL TERRAFILL OR APPROVED EQUAL.
2. PROVIDE #70MM^2 (2/0 AWG) COPPER GROUNDING CONDUCTORS FOR THE GROUNDING COUNTERPOISE AROUND THE FIRE STATION BUILDING AND THE COMPOUND FENCE. ALL EXTERIOR GROUNDING CONDUCTORS SHALL BE BURIED A MINIMUM OF 762MM (30") BELOW GRADE OR 152.4MM (6") BELOW FROST LINE, WHICHEVER IS GREATER). THE GROUND RING SHALL BE INSTALLED 914.4MM (3'-0") AWAY FROM FOUNDATION (MINIMUM UNLESS SHOWN OTHERWISE ON THE DRAWINGS) WHERE REQUIRED DUE SOIL CONDITIONS AND THE PRESENCE OF THE ROCK, THE ROUTING OF THE GROUND RING MAY BE ADJUSTED.
3. PROVIDE #35MM^2 (#2 AWG) SOLID BARE TINNED COPPER GROUNDING CONDUCTORS.
4. ALL BONDS TO THE BURIED GROUND RING SHALL BE EXOTHERMIC WELDS.
5. GROUNDING COUNTERPOISE SHALL BE LOCATED AT LEAST 914.4MM (36 INCHES) FROM THE BUILDING FOUNDATION.
6. BOND TO THE LIGHTNING PROTECTION SYSTEM.
7. SEE SHEET 01-E-105 FOR CONTINUATION TO THE LIGHTNING PROTECTION SYSTEM OF THE FIRE STATION BUILDING.
8. REBAR FOUNDATION OF ALL DROP GATES SHALL BE BONDED TO THE NEAREST LOCATION OF THE GROUNDING RING USING #35MM^2 (#2 AWG) OR LARGER BARE, TINNED COPPER CONDUCTORS. GROUNDING CONDUCTORS SHALL BE BURIED AT THE SAME DEPTH AS THE GROUNDING RING.
9. PROVIDE #70MM^2 (#2/0 AWG) SOLID BARE TINNED COPPER GROUNDING CONDUCTORS.

GROUNDING DESIGN DEVELOPED BASED ON 500 OHM-M RESISTIVELY. IT IS REQUIRED TO OBTAIN RESISTIVELY READING FOR EACH SPECIFIC SITE IN ORDER TO DEVELOP THE GROUNDING DESIGN FOR EACH SITE. SYSTEM GROUND RESISTANCE SHOULD NOT EXCEED 10 OHMS.

KEY

01 FIRE STATION
02 WOOD STOVE KITCHEN
03 GUARD HOUSE
04 TRAINING TOWER
05 GUARD TOWER
06 GAURD SHACK
07 SITE POWER HOUSE
08 WELL HOUSE
09 COMMUNICATION TOWER (OPTIONAL)
10 VEHICLE BARRIER
11 SLIDING GATE
12 MAN DOOR
13 VEHICLE / APPARATUS BAY
14 WATER TANK
15 FUEL STORAGE TANK & FUEL POINT
16 SEPTIC TANK
17 LEACH FIELD
18 CISTERN / TANK 95m^3
19 ECP
20 TRASH INSIDE
21 TRASH OUTSIDE
22 HYDRANT (TRUCK FILL POINT)
23 FUTURE AGENT & HAZMAT STORAGE SHED
24 FUTURE SUPPLY WAREHOUSE
25 HOSE-DRYING RACK (VERT)
26 FILL POINT

0 3000 6000 12000
SCALE: 1:300

REV	DATE	BY	SUB	APP	DESCRIPTION
0	06/30/10				SITE ADAPT CONSTRUCTION PLANS

DESIGNED M. ESTAFANOUS
DRAWN L. KRAVCHUK
CHECKED B. CRAWFORD
IN CHARGE D. WHEELER
DATE 30 JUNE 2010

AFGHAN NATIONAL SECURITY FORCE COMPREHENSIVE PLAN FOR FACILITIES DEVELOPMENT
MINISTRY OF INTERIOR (MoI) – AFGHAN NATIONAL POLICE PROVINCIAL FIRE STATION – TYPE-B
ELECTRICAL SITE GROUNDING PLAN

SCALE AS SHOWN
PROJECT NO. 6151-08-0328
00-E-102

\\tom-fs1tco\EAC\Engineering\000 FY 2011 RFPs in Progress\ANP\STANDARD TO DEVELOP Fire Station\MACTEC\CAD\00-E-102.dwg 03/14/2011 6:35pm N2ADNLRF

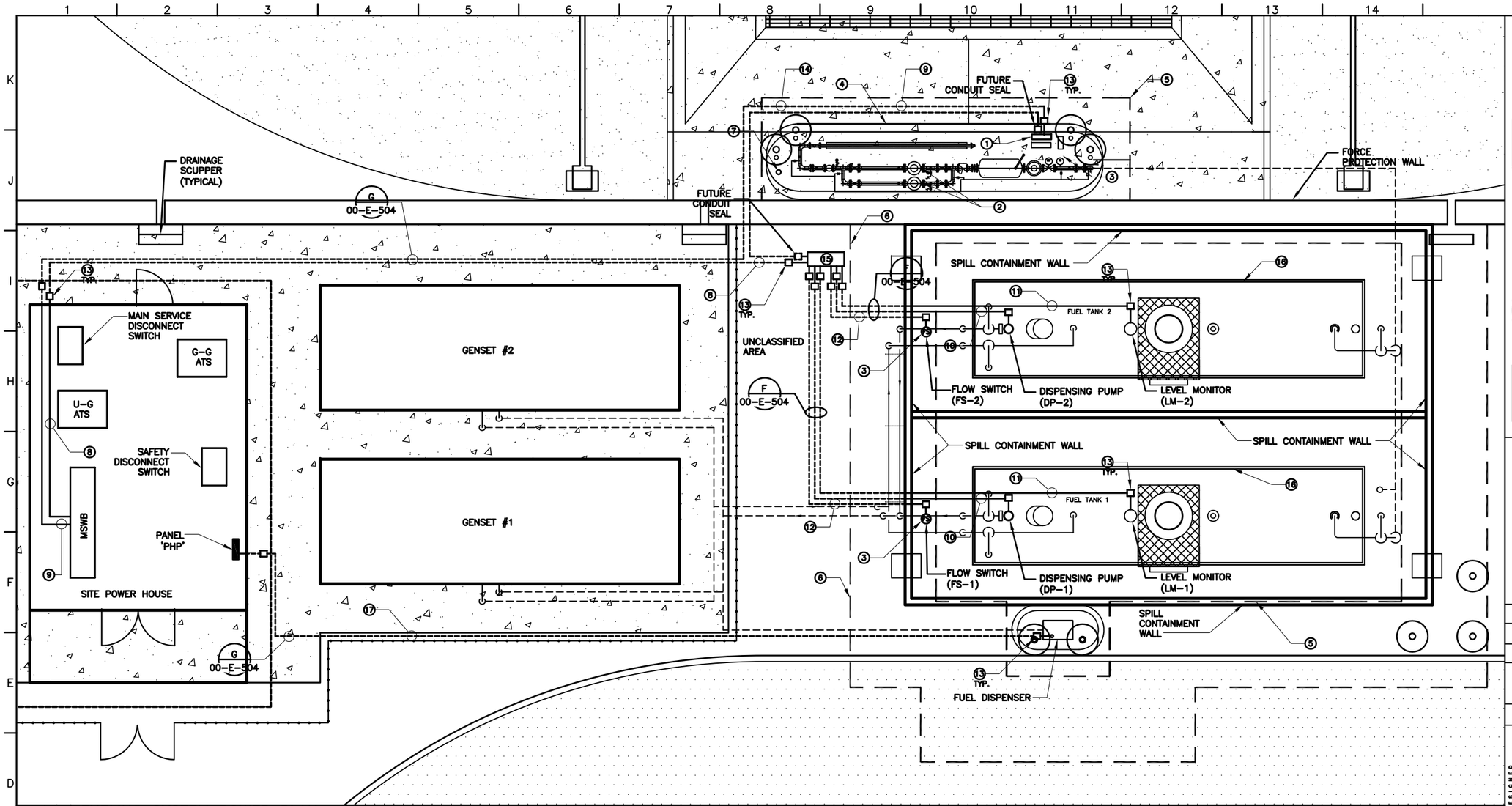

1 FUELING SYSTEM POWER PLAN

00-E-103 SCALE 1:50

GENERAL NOTES:

1. SEE SHEETS 00-E-001 AND 00-E-002 FOR LEGEND, ABBREVIATIONS, AND GENERAL NOTES.
2. ELECTRICAL POWER AND CONTROLS TRENCH SHALL BE A MINIMUM OF 1.2M (4FT) FROM FUEL TRENCH.

KEY NOTES

1. TRUCK OFFLOADING CONTROL PANEL, CLASS 1 DIVISION 1 ENCLOSURE. PANEL PROVIDED, DESIGNED AND SPECIFIED BY EQUIPMENT MANUFACTURER OF FUEL PACKAGE. SEE DETAIL B/00-E-502 AND FUEL DRAWINGS (00-F-001, 00-F-101, 00-F-201, 00-F-501 THROUGH 503, 00-F-601, AND 00-F-701).
2. TRUCK OFFLOADING PUMP
3. FLOW SWITCH (FS)
4. TRUCK OFFLOADING STATION SEE DETAIL D/00-E-502
5. CLASS 1 DIVISION 1 BOUNDARY (MIN. 915MM /3FT FROM EQUIPMENT)
6. CLASS 1 DIVISION 2 BOUNDARY (MIN. 3050MM /10FT FROM EQUIPMENT)
7. LIGHT FIXTURE. SEE DETAIL E/00-E-502.
8. 4-50MM^2, 16MM^2 GND, 41MM RGS/PVC
9. 4-120MM^2, 35MM^2 GND, 78MM RGS/PVC
10. 3-4MM^2, 4MM^2 GND, 21MM RGS PLUS ONE SPARE SET OF CONDUCTORS FOR DISPENSING PUMP MOTOR. SEE DETAIL F/00-E-504 FOR POWER CONDUIT.
11. 2-1MM^2, 1MM^2 GND, 21MM RGS BELDEN #8760 (OR EQUIVALENT) SHIELDED TWISTED PAIR PLUS ONE SPARE SET OF CONDUCTORS FOR LEVEL MONITOR. SEE DETAIL F/00-E-504 FOR CONTROL CONDUIT.
12. 2-2.5MM^2, 2.5MM^2 GND, 21MM RGS PLUS ONE SPARE SET OF CONDUCTORS FOR FLOW SWITCHES. SEE DETAIL F/00-E-504 FOR CONTROL CONDUIT.
13. CONDUIT SEAL LOCATIONS PER NFPA 70 (NEC 2008) ARTICLE 501 CLASS 1 LOCATIONS.
14. CONTROL CONDUIT FROM TRUCK OFFLOADING CONTROL PANEL TO STORAGE TANK CONTROL PANEL. 53MM RGS CONDUIT WITH PULLSTRING.
15. STORAGE TANK CONTROL PANEL NEMA 4 ENCLOSURE. PANEL PROVIDED, DESIGNED AND SPECIFIED BY EQUIPMENT MANUFACTURER OF FUEL PACKAGE. SEE DETAILS C/00-E-502 AND FUEL DRAWINGS (00-F-001, 00-F-101, 00-F-201, 00-F-501 THROUGH 503, 00-F-601, AND 00-F-701).
16. FUEL STORAGE TANK SEE DETAIL A/00-E-502 AND C/00-E-503.
17. 2-4MM^2, 4MM^2 GND, 21MM RGS FOR FUEL DISPENSER.

0 500 1000 2000

SCALE: 1:50

REV	DATE	BY	SUB	APP	DESCRIPTION
0	06/30/10				SITE ADAPT CONSTRUCTION PLANS

DESIGNED S. WILLIAMS
DRAWN S. WILLIAMS
CHECKED B. CRAWFORD
INCHARGE D. WHEELER
DATE 30 JUNE 2010

AFGHAN NATIONAL SECURITY FORCE
COMPREHENSIVE PLAN FOR FACILITIES DEVELOPMENT

MINISTRY OF INTERIOR (MoI) — AFGHAN NATIONAL POLICE
PROVINCIAL FIRE STATION – TYPE-B

FUELING SYSTEM POWER PLAN

SCALE AS SHOWN

PROJECT NO. 6151-08-0328

00-E-103

\\Usn-fs1\ecc\Engineering\000 FY 2011 RFPs in Progress\ANP\STANDARD TO DEVELOP Fire Station\MACTEC\CAD\00-E-103.dwg 03/14/2011 6:37pm N2ADNLBF

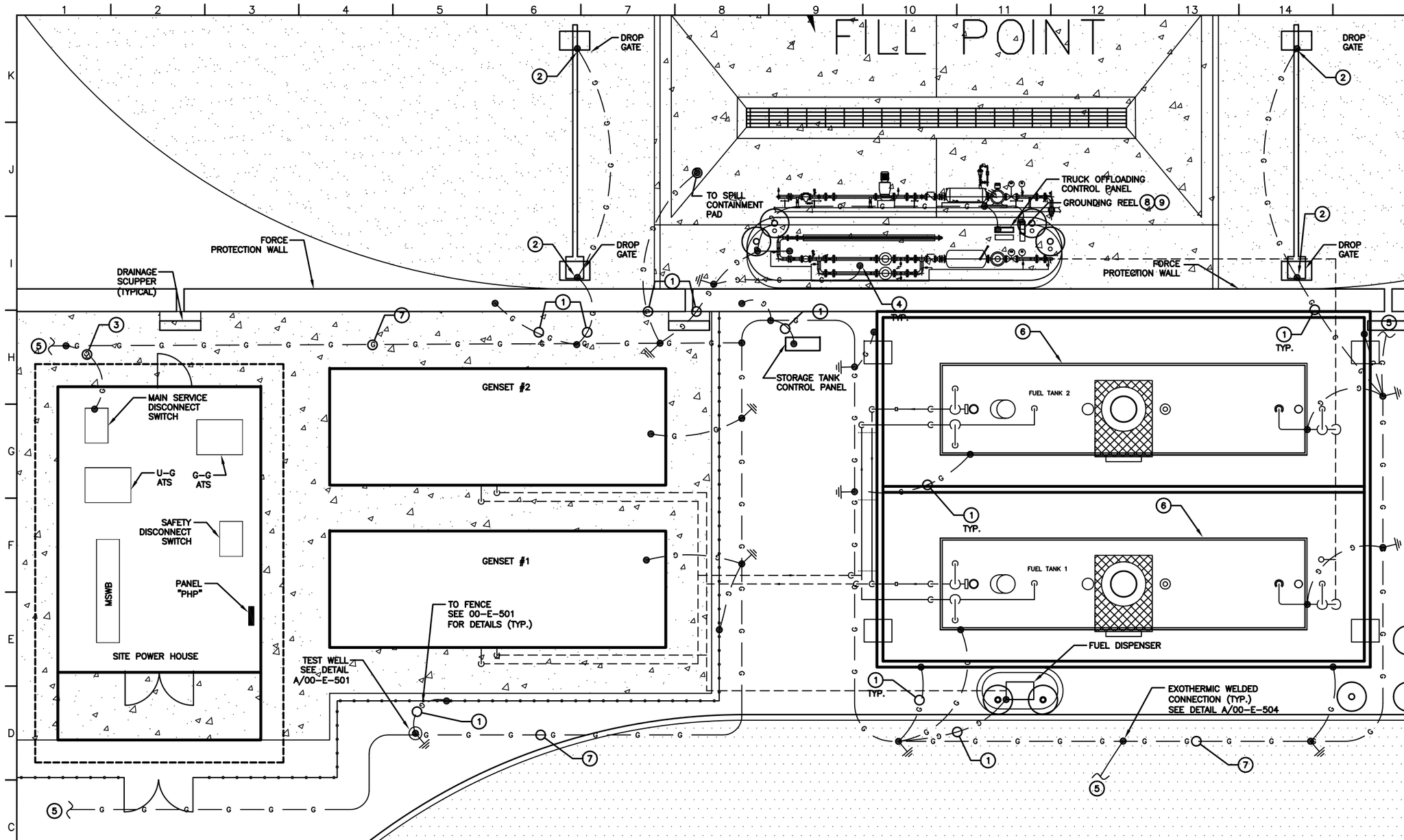

1 FUELING SYSTEM GROUNDING PLAN

00-E-104 SCALE 1:50

GENERAL NOTES:

1. SEE SHEET 00-E-001 AND 00-E-002 FOR LEGEND, ABBREVIATIONS, AND GENERAL NOTES.
2. CATHODIC PROTECTION TO BE SITE ADAPT AND PROVIDED IN ACCORDANCE WITH UNIFIED FACILITIES CRITERIA (UFC) 3-570-02A (MARCH 2005) FOR EACH SITE.

KEY NOTES:

1. PROVIDE #35MM² (#2 AWG) SOLID, BARE, COPPER CONDUCTORS.
2. REBAR WITHIN THE FOUNDATION OF THE DROP GATES SHALL BE EXOTHERMICALLY WELDED AT THE REBAR AND TO THE NEAREST LOCATION OF THE GROUNDING RING USING #35MM² (#2 AWG) SOLID BARE, TINNED COPPER CONDUCTORS. GROUNDING CONDUCTOR.
3. PROVIDE (2) #95MM² (#3/0 AWG) SOLID, BARE, TINNED COPPER GROUNDING CONDUCTORS.
4. ALL METAL PIPING SHALL BE GROUNDED.
5. CONNECT TO MAIN SITE GROUNDING COUNTERPOISE. SEE SITE GROUNDING PLAN SHEET 00-E-102 FOR CONTINUATION.
6. SEE FUEL STORAGE TANK GROUNDING DETAIL C/00-E-503.
7. PROVIDE #70MM² (#2/0 AWG) SOLID, BARE TINNED COPPER GROUNDING CONDUCTORS.
8. SPRING RETRACTABLE GROUNDING REEL 15M (50FT), 2.38MM (3/32") OD STEEL AIRCRAFT CABLE. DC RESISTANCE IS APPROXIMATELY ONE OHM PER 15M (50FT) OF STEEL CABLE.
9. GROUNDING LUG TO BE FASTENED TO UNPAINTED PORTION OF THE SUPPORT PLATE.

BUILDING GROUNDING SYSTEM DESIGN IS BASED ON A SOIL RESISTIVITY OF 50,000 Ω-CM. FOR SOIL RESISTIVITIES ABOVE 50,000 Ω-CM SITE ADAPT DESIGN MAY BE NECESSARY. THE ABOVE BASIS OF THE GROUNDING DESIGN SHOULD ACHIEVE LESS THAN 25 Ω RESISTANCE TO GROUND.

SITE ADAPT NOTE:

EVALUATE AND PROVIDE FINAL GROUNDING DESIGN AFTER SITE IS SELECTED.

0 500 1000 2000

SCALE: 1:50

REV	DATE	BY	SUB	APP	DESCRIPTION
0	06/30/10				SITE ADAPT CONSTRUCTION PLANS

DESIGNED S. WILLIAMS
DRAWN S. WILLIAMS
CHECKED B. CRAWFORD
CHECKED D. WHEELER
DATE 30 JUNE 2010

AFGHAN NATIONAL SECURITY FORCE
COMPREHENSIVE PLAN FOR FACILITIES DEVELOPMENT

MINISTRY OF INTERIOR (MoI) – AFGHAN NATIONAL POLICE
PROVINCIAL FIRE STATION – TYPE-B

FUELING SYSTEM GROUNDING PLAN

SCALE AS SHOWN

PROJECT NO. 6151-08-0328

00-E-104

\\Usr-fs01\a\E&C\Engineering\00 FY 2011 RFPs in Progress\ANP\STANDARD TO DEVELOP Fire Station\MACTEC\CAD\00-E-104.dwg 03/14/2011 6:37pm H2AENLRF

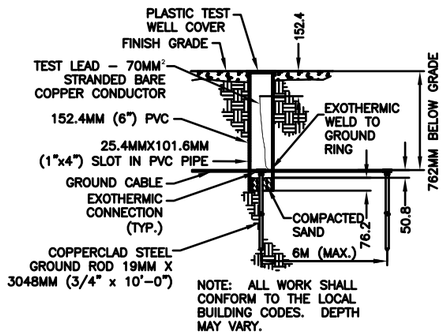

NOTE: ALL WORK SHALL CONFORM TO THE LOCAL BUILDING CODES. DEPTH MAY VARY.

A GROUND ROD INSPECTION WALL DETAIL

00–E–501 SCALE N.T.S.

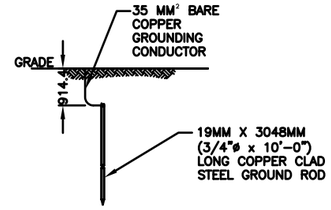

NOTE:
GROUND ROD SHALL BE DRIVEN VERTICALLY, NOT TO EXCEED 45 DEGREES FROM THE VERTICAL.

B GROUND ROD DETAIL

00–E–501 SCALE N.T.S.

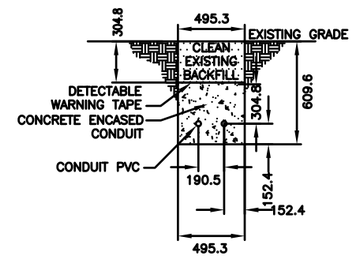

C TRENCH DETAIL CONCRETE ENCASED

00–E–501 SCALE N.T.S. A–A101

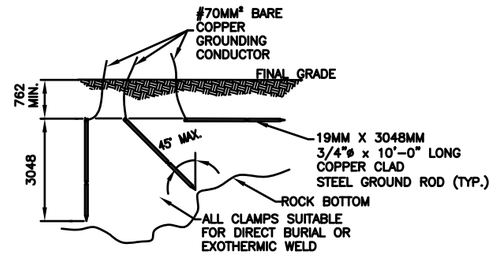

NOTE:
1. THE ELECTRODE SHALL BE INSTALLED SUCH THAT AT LEAST 10' OF LENGTH IS IN CONTACT WITH THE SOIL.

2. GROUND ROD SHALL BE DRIVEN VERTICALLY, NOT TO EXCEED 45 DEGREES FROM THE VERTICAL.

3. WHERE ROCK BOTTOM IS ENCOUNTERED THE ELECTRODE SHALL BE PERMITTED TO BE BURIED IN A TRENCH THAT IS AT LEAST 762MM DEEP

D BURIED GROUND ROD DETAIL

00–E–501 SCALE N.T.S.

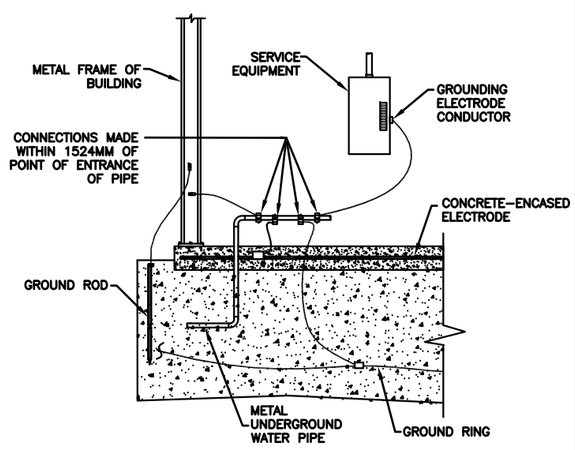

E GROUNDING ELECTRODE SYSTEM DETAIL

00–E–501 SCALE N.T.S.

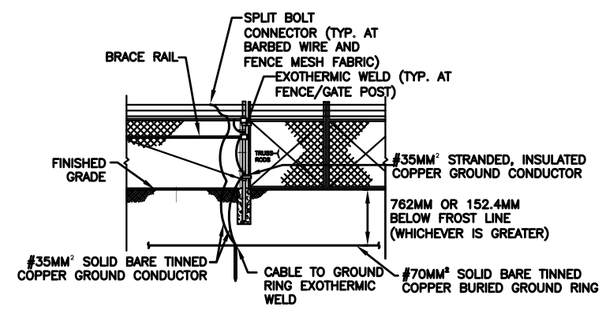

UVERTICAL FENCE/GATE POST BONDED TO GROUND RING

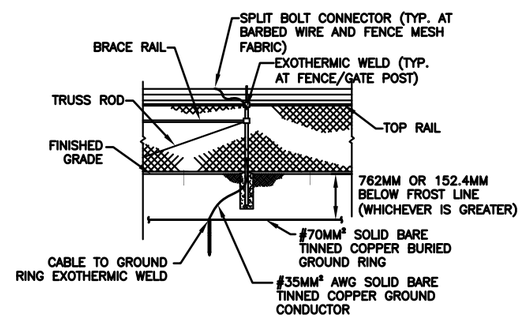

UVERTICAL POST CONNECTED TO RING

NOTES:

1. EACH CORNER FENCE POST SHALL BE BONDED TO THE NEAREST LOCATION OF THE BUILDING GROUND RING USING #35MM² OR LARGER BARE TINNED COPPER CONDUCTORS.

2. THE FENCE FABRIC AND EACH STRAND OF BARE WIRE NEAR EACH CORNER BONDING POINT SHALL BE BONDED TO THE BUILDING GROUND RING.

3. ALL GATE POSTS SHALL BE BONDED TO THE NEAREST LOCATION OF THE GROUND RING USING #35MM² OR LARGER BARE TINNED COPPER CONDUCTORS.

F FENCE GROUNDING DETAIL

00–E–501 SCALE N.T.S.

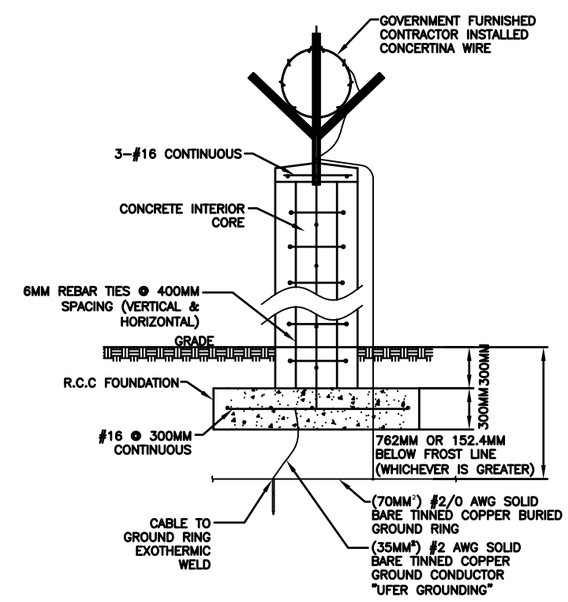

G CONCERTINA & STONE WALL GROUNDING DETAIL

00–E–501 SCALE N.T.S.

REV	DATE	BY	SUB	APP	DESCRIPTION
0	06/30/10				SITE ADAPT CONSTRUCTION PLANS

DESIGNED S. WILLIAMS
DRAWN S. WILLIAMS
CHECKED R. CRAWFORD
TECH REVIEW D. WHEELER
DATE 30 JUNE 2010

AFGHAN NATIONAL SECURITY FORCE
COMPREHENSIVE PLAN FOR FACILITIES DEVELOPMENT

MINISTRY OF INTERIOR (MoI) – AFGHAN NATIONAL POLICE
PROVINCIAL FIRE STATION – TYPE–B

ELECTRICAL DETAILS

SCALE AS SHOWN

PROJECT NO. 6151–08–0328

00–E–501

\\tam–fs1\loc\E&C\Engineering\000 FY 2011 RFPs in Progress\ANP\STANDARD TO DEVELOP Fire Station\MACTEC\CAD\00–E–501.dwg 03/14/2011 6:38pm N2ANDLRF

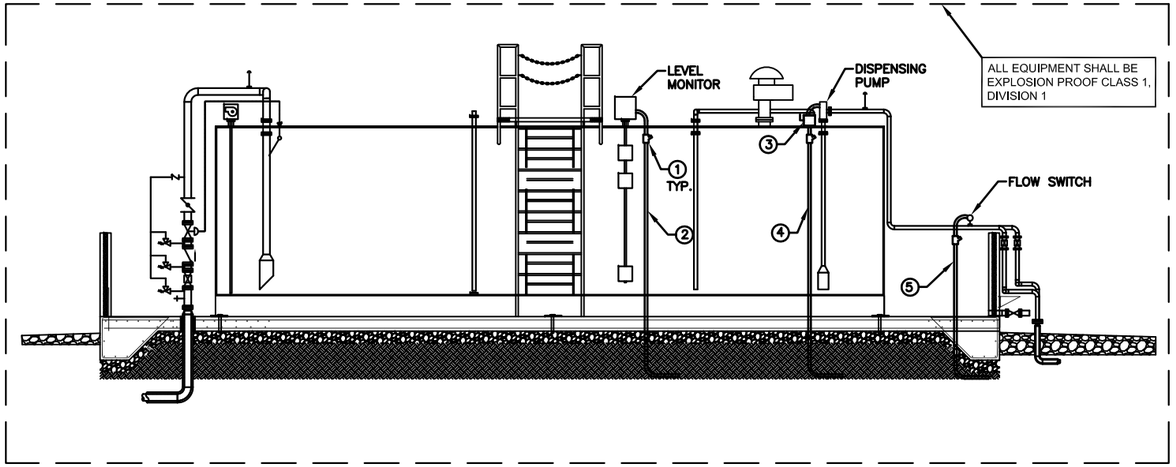

A FUEL STORAGE TANK

00-E-502 SCALE N.T.S.

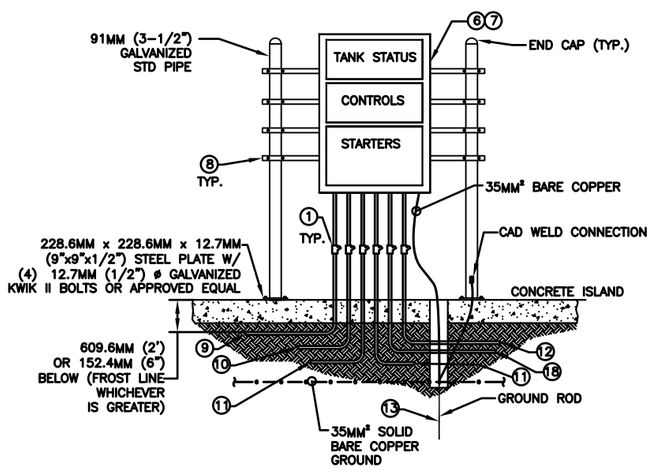

B TRUCK OFFLOADING CONTROL PANEL

00-E-502 SCALE N.T.S.

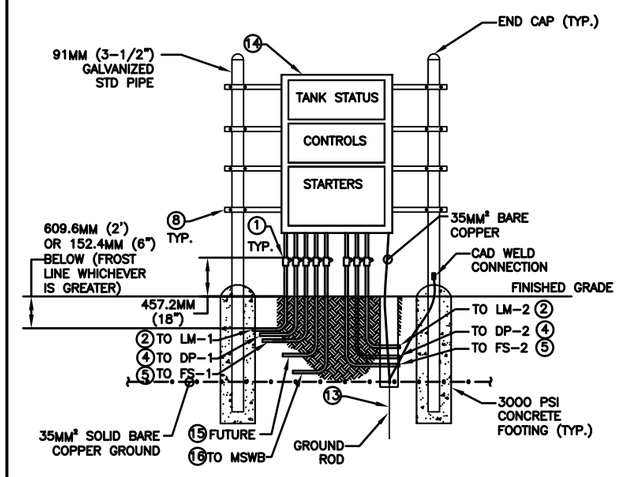

C STORAGE TANK CONTROL PANEL

00-E-502 SCALE N.T.S.

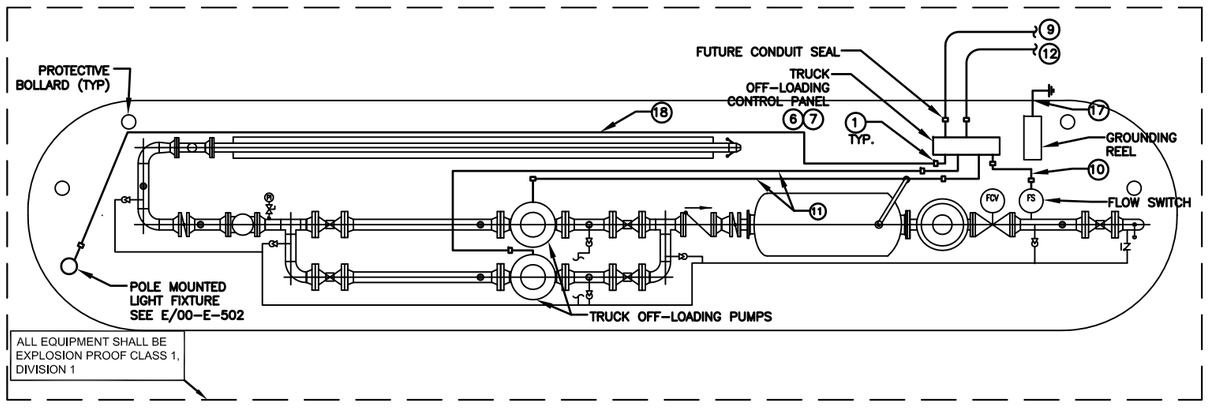

D TRUCK OFFLOADING STATION

00-E-502 SCALE N.T.S.

KEY NOTES:

1. CONDUIT SEAL LOCATIONS PER NFPA 70 (NEC 2008) ARTICLE 501 CLASS 1 LOCATIONS.
2. 2–1MM², 1MM² GND, 21MM RGS BELDEN #8760 (OR EQUIVALENT) 4 – 20 MA SHIELDED TWISTED PAIR PLUS SPARE PAIR TO STORAGE TANK CONTROL PANEL.
3. CLASS 1 DIVISION 1, EXPLOSION PROOF 30A/3Φ/NF DISCONNECT SWITCH.
4. 3–4MM², 4MM² GND, 21MM RGS PLUS SPARE SET OF CONDUCTORS TO STORAGE TANK CONTROL PANEL. (DISPENSING PUMP: 1.5HP, 380V, 3Φ)
5. 2–2.5MM², 2.5MM² GND, 21MM RGS PLUS SPARE SET OF CONDUCTORS TO STORAGE TANK CONTROL PANEL. (FLOW SWITCH: 8A, 220V, 1Φ)
6. TRUCK OFFLOADING CONTROL PANEL DESIGNED AND PROVIDED BY EQUIPMENT ANUFACTURER FOR FUEL PACKAGE. SEE FUEL DRAWINGS (00–F–001, 00–F–101, 00–F–201, 00–F–501 THROUGH 503, 00–F–601, AND 00–F–701).
7. TRUCK OFF–LOADING CONTROL PANEL CLASS 1 DIVISION 1 ENCLOSURE. THE PANEL IS LOCATED IN A CLASS 1 DIVISION 1 AREA. SEE SHEET 00–E–103 FOR PANEL LOCATION.
8. 41.28MM x 41.28MM (1 5/8" x 1 5/8") GALVANIZED STEEL CHANNEL WITH 12.7MM (1/2") STAINLESS STEEL U–BOLTS WITH (1) LOCK AND (1) FLAT WASHER EACH SIDE, AND DOUBLE NUT (TYP.). LOCATE CHANNEL ON UTILITY RACK AS REQUIRED TO SUPPORT ELECTRICAL EQUIPMENT.
9. 53MM RGS CONDUIT WITH PULLSTRING TO STORAGE TANK CONTROL PANEL. SEE SHEET 00–E–103 FOR PANEL LOCATION.
10. 2–2.5MM², 2.5MM² GND, 21MM RGS TO 8A, 220V, 1Φ FLOW SWITCH.
11. 3–50MM², 10MM² GND, 41MM RGS TO 20HP, 380V, 3Φ TRUCK OFFLOADING PUMP.
12. 4–120MM², 35MM² GND, 78MM RGS/PVC TO MSWB. SEE SHEET 00–E–103 FOR PANEL LOCATION AND SHEET 00–E–602 FOR PANEL SCHEDULE.
13. SEE DETAIL A/00–E–501, B/00–E–501 AND D/00–E–501.
14. STORAGE TANK CONTROL PANEL, NEMA 4 ENCLOSURE. PANEL IS LOCATED IN AN UNCLASSIFIED AREA. SEE SHEET 00–E–103 FOR PANEL LOCATION. CONTROL PANEL TO BE DESIGNED AND PROVIDED BY EQUIPMENT MANUFACTURER FOR FUEL PACKAGE. SEE FUEL DRAWINGS (00–F–001, 00–F–101, 00–F–201, 00–F–501 THROUGH 503, 00–F–601, AND 00–F–701).
15. 53MM RGS CONDUIT WITH PULLSTRING TO TRUCK OFFLOADING CONTROL PANEL. SEE SHEET 00–E–103 FOR PANEL LOCATION.
16. 4–50MM², 16MM² GND, 41MM RGS/PVC TO MSWB. SEE SHEET 00–E–103 FOR PANEL LOCATION AND SHEET 00–E–602 FOR PANEL SCHEDULE.
17. GROUNDED CONDUCTOR TO GROUNDING FOR GROUNDING REEL. SEE 00–E–103.
18. 2–4MM², 4MM² GND, 21MM RGS CONDUIT FOR LIGHT FIXTURE. SEE DETAIL E/00–E–502.

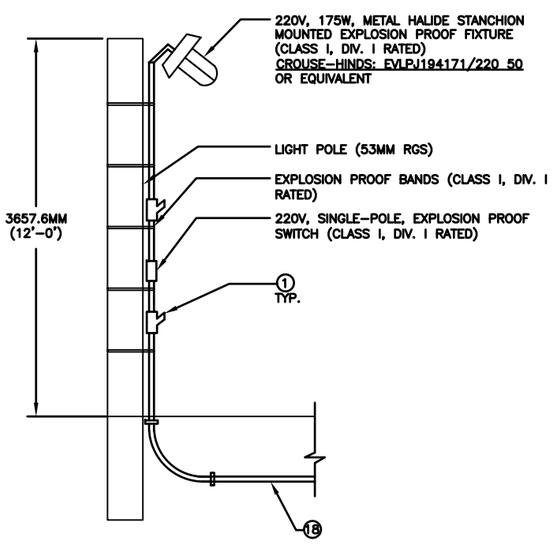

E POLE–MOUNTED LIGHT FIXTURE

00-E-502 SCALE N.T.S.

REV	DATE	BY	SUB	APP	DESCRIPTION
0	06/30/10				SITE ADAPT CONSTRUCTION PLANS

DESIGNED S. WILLIAMS
DRAWN C.F. SANDERS
CHECKED B. CRAWFORD
TEAM LEADER D. WHEELER
DATE 30 JUNE 2010

AFGHAN NATIONAL SECURITY FORCE
COMPREHENSIVE PLAN FOR FACILITIES DEVELOPMENT

MINISTRY OF INTERIOR (MoI) — AFGHAN NATIONAL POLICE
PROVINCIAL FIRE STATION – TYPE–B

ELECTRICAL DETAILS

SCALE AS SHOWN

PROJECT NO. 6151–08–0328

00–E–502

\\tom-fs1\cs\E&C\Engineering\000 FY 2011 RFPs in Progress\ANP\STANDARD TO DEVELOP Fire Station\MACTEC\CAD\00-E-502.dwg 03/14/2011 6:38pm H2AENJRF

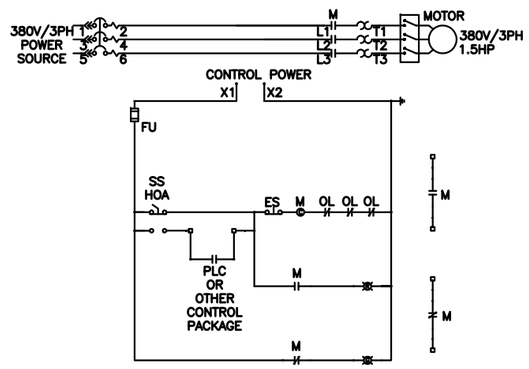

NOTE:

CONTROL PACKAGE WITH STARTER TO BE DESIGNED, SPECIFIED AND PROVIDED BY OTHERS. SEE DRAWINGS 00-E-601 AND FUEL DRAWINGS (00-F-001, 00-F-101, 00-F-201, 00-F-501 THROUGH 503, 00-F-601, AND 00-F-701).

A TYPICAL DISPENSING PUMP STARTER

00-E-503 SCALE N.T.S.

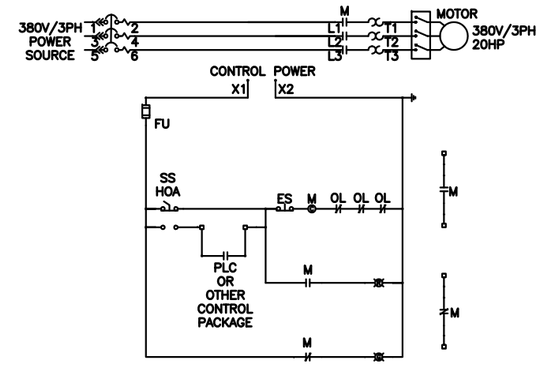

NOTE:

CONTROL PACKAGE WITH STARTER TO BE DESIGNED, SPECIFIED AND PROVIDED BY OTHERS. SEE DRAWINGS 00-E-601 AND FUEL DRAWINGS (00-F-001, 00-F-101, 00-F-201, 00-F-501 THROUGH 503, 00-F-601, AND 00-F-701).

B TYPICAL TRUCK OFFLOADING PUMP STARTER

00-E-503 SCALE N.T.S.

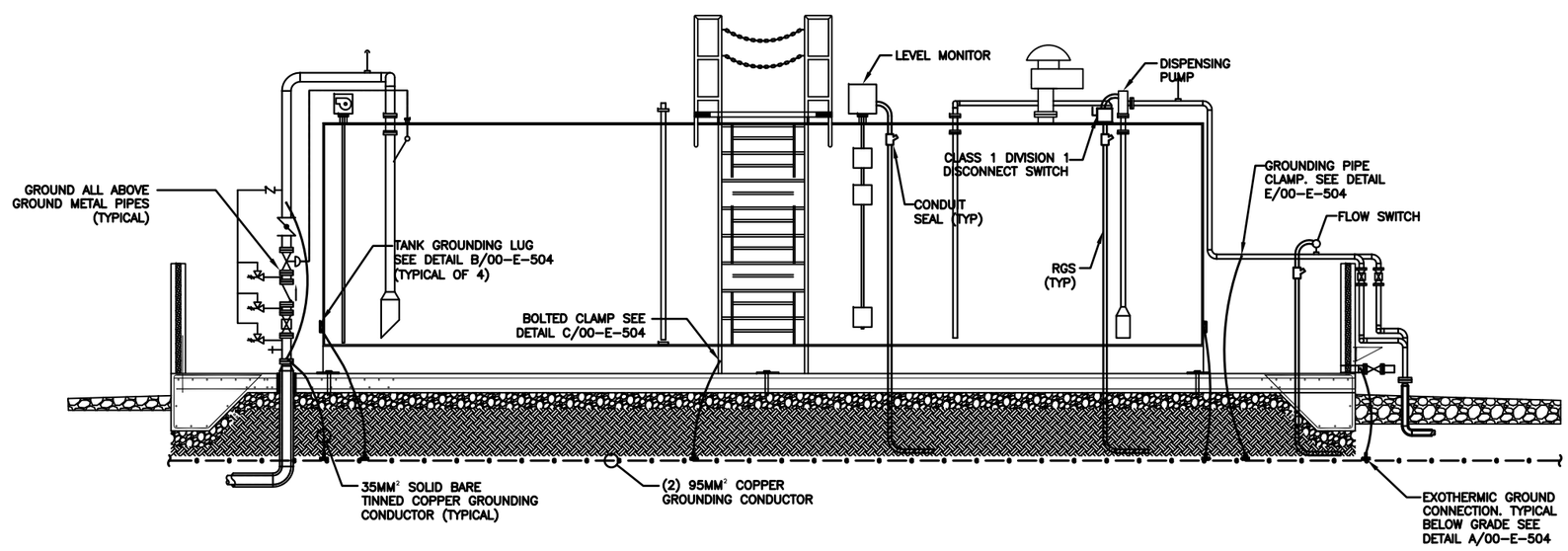

C FUEL STORAGE GROUNDING DETAIL

00-E-503 SCALE N.T.S.

REV	DATE	BY	SUB	APP	DESCRIPTION
0	06/30/10				SITE ADAPT CONSTRUCTION PLANS

DESIGNED S. WILLIAMS
DRAWN C.F. SANDERS
CHECKED B. CRAWFORD
INCHARGE D. WHEELER
DATE 30 JUNE 2010

AFGHAN NATIONAL SECURITY FORCE
COMPREHENSIVE PLAN FOR FACILITIES DEVELOPMENT

MINISTRY OF INTERIOR (MoI) – AFGHAN NATIONAL POLICE
PROVINCIAL FIRE STATION – TYPE-B

ELECTRICAL DETAILS

SCALE AS SHOWN

PROJECT NO. 6151-08-0328

00-E-503

\\tom-fs1\acs\EAC\Engineering\000 FY 2011 RFPs in Progress\ANP\STANDARD TO DEVELOP Fire Station\MACTEC\CAD\00-E-503.dwg 03/14/2011 6:39pm H2AENLRF

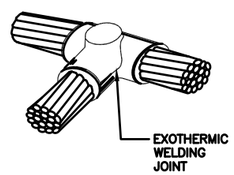

A T-CONNECTION EXOTHERMIC WELDING JOINT
00-E-504 SCALE N.T.S.

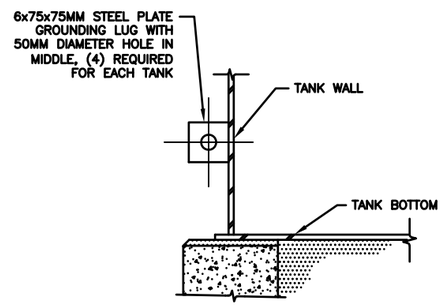

B TANK GROUNDING LUG DETAIL
00-E-504 SCALE N.T.S.

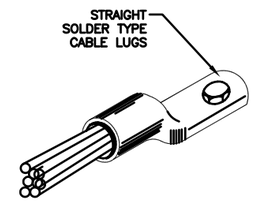

C GROUND CABLE LUG DETAIL
00-E-504 SCALE N.T.S.

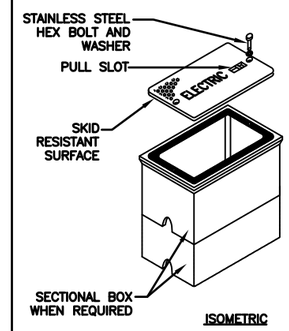

PULLBOX REQUIREMENTS:

1. HOUSING SHALL BE A POLYMER CONCRETE REINFORCED WITH A HEAVY WEAVE FIBERGLASS REINFORCING WITH COMPRESSIVE STRENGTH OF NO LESS THAN 10,000 PSI.

2. COVER SHALL WITHSTAND A SERVICE LOAD OF NO LESS THAN 6804KG (15,000 LBS) OVER A 254MM x 254MM AREA.

3. PROVIDE STAINLESS STEEL BOLTS AND INSERTS.

4. SIZE TO BE FIELD DETERMINED.

D CONCRETE REINFORCED ELECTRICAL MANHOLE
00-E-504 SCALE N.T.S.

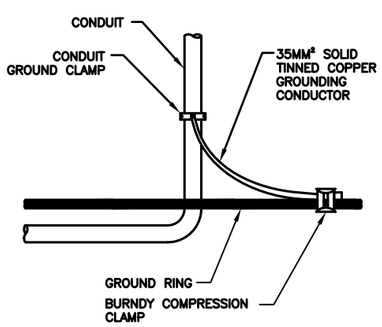

E CONDUIT GROUNDING DETAIL
00-E-504 SCALE N.T.S.

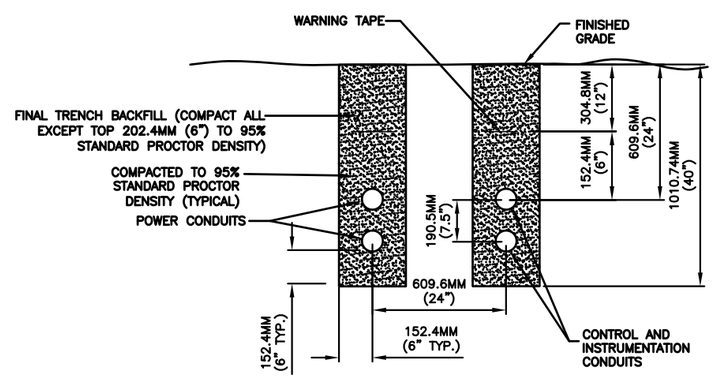

F LOW VOLTAGE POWER AND CONTROL CONDUIT TRENCH DETAIL
00-E-504 SCALE N.T.S.

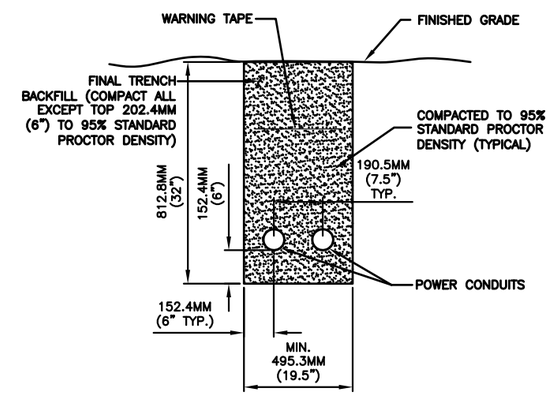

G LOW VOLTAGE POWER CONDUIT TRENCH DETAIL
00-E-504 SCALE N.T.S.

REV	DATE	BY	SUB	APP	DESCRIPTION
0	06/30/10				SITE ADAPT CONSTRUCTION PLANS

DESIGNED M. ESTAFANOUS
DRAWN C.F. SANDERS
CHECKED B. CRAWFORD
LEAD DESIGNER D. WHEELER
DATE 30 JUNE 2010

AFGHAN NATIONAL SECURITY FORCE
COMPREHENSIVE PLAN FOR
FACILITIES DEVELOPMENT

MINISTRY OF INTERIOR (MoI) – AFGHAN NATIONAL POLICE
PROVINCIAL FIRE STATION – TYPE-B

ELECTRICAL DETAILS

SCALE AS SHOWN

PROJECT NO. 6151-08-0328

00-E-504

\\tom-fs1\cos\EAC\Engineering\000 FY 2011 RFPs in Progress\ANP\STANDARD TO DEVELOP Fire Station\MACTEC\CAD\00-E-504.dwg 03/14/2011 8:39pm HZAENLRF

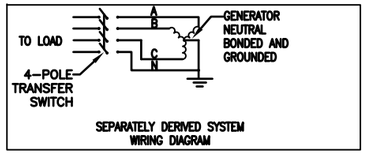

SITE ADAPT NOTES:

1. GENERATOR SIZE IS BASED ON THE FOLLOWING SITE CONDITIONS: AN ALTITUDE OF 2012M (6600'), A MAXIMUM AMBIENT TEMPERATURE OF 40°C (104°F) AND STANDARD DIESEL FUEL. ADJUSTMENTS TO THE GENERATOR SIZE MAY BE REQUIRED DUE TO CHANGES IN SITE CONDITIONS AND/OR TYPE OF FUEL.

2. EVALUATE AND PROVIDE FINAL DESIGN FOR SHORT CIRCUIT CALCULATION AND OVER CURRENT PROTECTIVE DEVICE COORDINATION STUDY AFTER SITE AND ELECTRICAL POWER PROVIDER ARE SELECTED

CONDUCTORS & CONDUIT SCHEDULE		
	(ENGLISH)	(METRIC)
1	4SETS(4#600 KCMIL, 1#1/0 G, 4"C)	4SETS(4#300MM², 1#70MM² G, 103MMC)
2	4SETS(4#350 KCMIL, 1#1/0 G, 3"C)	4SETS(4#185MM², 1#70MM² G, 78MMC)
3	(4#4 AWG, 1#8G, 1-1/4"C)	(4#25MM², 1#10MM² G, 35MMC)
4	(4#350 KCMIL, 1#2 G, 3"C)	(4#185MM², 1#35MM² G, 78MMC)
5	(3#10 AWG, 1#10G, 3/4"C)	(3#6MM², 1#6MM² G, 21MMC)
6	(4#1 AWG, 1#6G, 2"C)	(4#50MM², 1#16MM² G, 53MMC)
7	(4#2/0 AWG, 1#4G, 2"C)	(4#70MM², 1#25MM² G, 53MMC)
8	(4#250 AWG, 1#2G, 3"C)	(4#150MM²,1#35MM² G, 78MMC)
9	NOT USED	NOT USED
10	(3#12 AWG, 1#12G, 3/4"C)	(3#4MM², 1#4MM² G, 21MMC)
11	NOT USED	NOT USED
12	NOT USED	NOT USED
13	(2#12 AWG, 1#12G, 3/4"C)	(2#4MM², 1#4MM² G, 21MMC)
14	(3#1 AWG, 1#8G, 1-1/2"C)	(3#50MM², 1#10MM² G, 41MMC)
15	NOT USED	NOT USED
16	(3#2/0 AWG, 1#6G, 2"C)	(3#70MM², 1#16MM² G, 53MMC)

GENERAL NOTES:

1. SEE SHEETS 00-E-001 AND 00-E-002 FOR ELECTRICAL LEGEND, ABBREVIATIONS AND GENERAL NOTES.
2. AIC RATING OF ALL CIRCUIT BREAKERS OF "MSWB" SHALL NOT BE LESS THAN 42,000 AMPS.
3. CONDUCTOR SIZES BASED ON 75° C INSULATION.
4. PROVIDE PHENOLIC ENGRAVED NAMEPLATE FOR SWITCHBOARD, ATS, DISCONNECT SWITCHES, PANEL BOARDS, CIRCUIT BREAKERS, AND ANY OTHER POWER EQUIPMENT.

KEY NOTES:

1. PROVIDE MAIN BONDING JUMPER BETWEEN THE GROUND BUS AND THE NEUTRAL BUS AT THE MAIN SERVICE ENTRANCE FUSED SAFETY SWITCH.
2. MAIN CIRCUIT BREAKER IN "MSWB" AND "FDP" SHALL BE 100% RATED, WITH LSIG SETTINGS (LONG PICK UP AND DELAY, SHORT PICK UP AND DELAY, INSTANTANEOUS PICK UP, AND GROUND-FAULT PICKUP AND DELAY).
3. TWO DIESEL GENERATORS, CONTINUOUS POWER, DE-RATED FOR KABUL ALTITUDE AND TEMPERATURE. ONE GENERATOR FOR PRIMARY POWER AND ONE FOR SECONDARY POWER, 100% FULL REDUNDANCY. PROVIDE SKID MOUNTED ONBOARD FUEL TANK, AUTOMATIC LOAD BANK, AND WEATHER PROOF/ SOUND ATTENUATED ENCLOSURE. CATERPILLAR GENSET MODEL#3412C 648KW/810KVA OR APPROVED EQUAL.
4. 1600A UTILITY TO GENERATOR (U-G) ATS, 4 POLES- SWITCHED NEUTRAL.
5. 2#3/0 AWG (2#95MM²) SOLID BARE TINNED COPPER GROUND ELECTRODE CONDUCTOR EXOTHERMICALLY WELDED TO GENERATOR FRAME AND TO BURIED GROUND ROD, MECHANICALLY BOND TO GENERATOR NEUTRAL BUS (MAIN BONDING JUMPER). GENERATOR SHALL BE SEPARATELY DERIVED SYSTEM, SEE WIRING DIAGRAM FOR SEPARATELY DERIVED SYSTEM ON THIS SHEET.
6. 1600A GENERATOR TO GENERATOR (G-G) ATS, 4 POLES - SWITCHED NEUTRAL.
7. MOUNT TVSS UNIT AS CLOSE AS POSSIBLE TO MAIN BREAKER OF PANELBOARD, SEE MANUFACTURER INSTRUCTIONS.
8. 30A/NF/3P/NEMA 3R DISCONNECT SWITCH.
9. SEE SHEET 00-E-102 FOR SIZE OF GROUNDING ELECTRODE CONDUCTORS (GEC).
10. WATER CONTROL PANEL/CONTROLS TO BE DESIGNED, SPECIFIED, AND PROVIDED BY EQUIPMENT MANUFACTURER FOR WATER PUMP PACKAGE.
11. FUEL CONTROL PANELS TO BE DESIGNED, SPECIFIED, AND PROVIDED BY EQUIPMENT MANUFACTURER FOR FUEL PACKAGE.
12. NEMA TYPE 4 ENCLOSURE
13. CIRCUIT BREAKER IN "MSWB" FEEDING "FDP" SHALL BE RATED WITH LSI SETTINGS (LONG PICKUP AND DELAY, SHORT PICKUP AND DELAY, AND INSTANTANEOUS PICKUP).
14. CONTROL WIRING TO FLOW SWITCH(ES). SEE FUEL DRAWINGS.
15. CONTROL WIRING TO TANKS T1 AND T2. SEE FUEL DRAWINGS.
16. TO POLE MOUNTED LIGHT FIXTURE, 175W MH, 15A/220V, 1ø CIRCUIT.
17. 100A/NF/3P/NEMA 3R DISCONNECT SWITCH.
18. 2#3/0 AWG (2#95MM²) SOLID BARE TINNED COPPER GROUND ELECTRODE CONDUCTOR EXOTHERMICALLY WELDED TO SAFTEY SWITCH FRAME AND TO BURIED GROUND ROD,

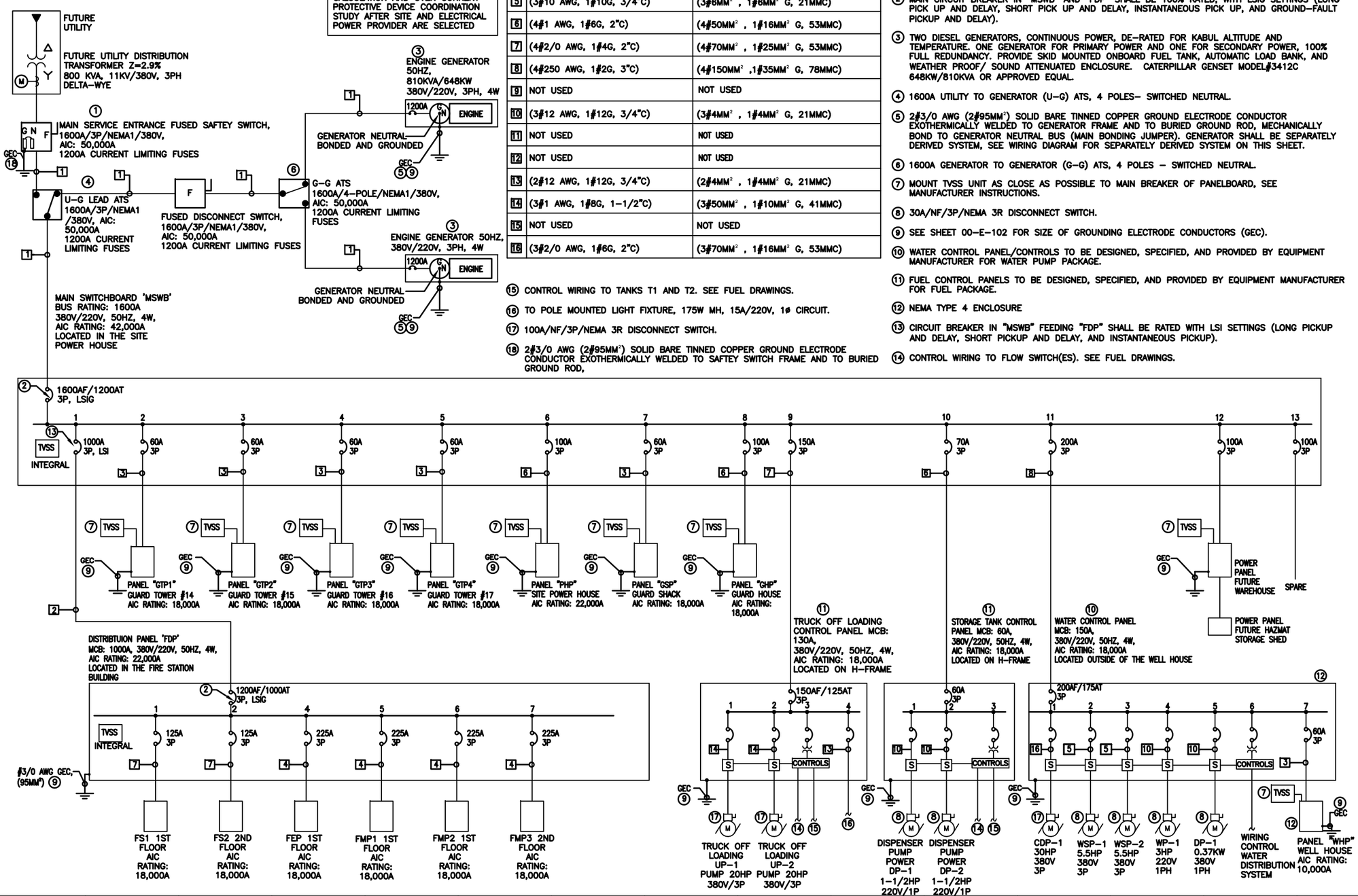

					SITE ADAPT CONSTRUCTION PLANS	DESCRIPTION
						BY SUB APP
				0	06/30/10	REV DATE

DESIGNED M. ESTAFANOUS
DRAWN DRAWN
CHECKED D. CRAWFORD
LEAD DESIGNER D. WHEELER
DATE 30 JUNE 2010

AFGHAN NATIONAL SECURITY FORCE COMPREHENSIVE PLAN FOR FACILITIES DEVELOPMENT

MINISTRY OF INTERIOR (MoI) – AFGHAN NATIONAL POLICE PROVINCIAL FIRE STATION – TYPE-B

SINGLE LINE DIAGRAM

SCALE AS SHOWN

PROJECT NO. 6151-08-0328

00-E-601

\\San-fs1\ksa\CAD\Engineering\000 FY 2011 RFPs In Progress\AMP\STANDARD TO DEVELOP Fire Station\MACTEC\CAD\00-E-601.dwg 03/14/2011 6:40pm H2ADALBF

SWITCHBOARD: "MSWB"		MAINS TYPE	LSIG BREAKER	K.A.I.C	42,000 MIN.	MOUNTING:	FREE STANDING
SUPPLY FROM:	U-G ATS	MAINS RATING	1600 AMP	MCB RATING:	1200 AMP	ENCLOSURE:	NEMA 1
VOLTAGE:	380/220V WYE	PHASES:	3	WIRES:	4	LOCATION:	SITE POWER HOUSE

NO	DESIGNATION	FEEDER	POLE	FRAME SIZE	TRIP RATING	LOAD (KVA)	FLA
1	DISTRIBUTION PANEL FDP	4 SETS (4/185MM^2 ,1/70MM^2 G), 103MM C	3	1200 A	1000 A (LSI)	412.22	626.3
2	PANEL GTP1	4/25MM^2 ,1/10MM^2 G, 35MM C	3	150 A	60 A	4.25	6.5
3	PANEL GTP2	4/25MM^2 ,1/10MM^2 G, 35MM C	3	150 A	60 A	4.25	6.5
4	PANEL GTP3	4/25MM^2 ,1/10MM^2 G, 35MM C	3	150 A	60 A	4.25	6.5
5	PANEL GTP4	4/25MM^2 ,1/10MM^2 G, 35MM C	3	150 A	60 A	4.25	6.5
6	PANEL FHP	4/50MM^2 ,1/16MM^2 G, 41MM C	3	150 A	100 A	37.4	56.8
7	PANEL GSP	4/25MM^2 ,1/10MM^2 G, 35MM C	3	150 A	60 A	4.1	6.2
8	PANEL GHP	4/50MM^2 ,1/16MM^2 G, 41MM C	3	150 A	100 A	13.85	21.0
9	TRUCK OFF LOADING CONTROL PANEL (NOTE 1)	4/120MM^2 ,1/16MM^2 G, 78MM C	3	200 A	150 A	—	—
10	STORAGE TANK CONTROL PANEL (NOTE 1)	4/50MM^2 ,1/16MM^2 G, 41MM C	3	150 A	70 A	—	—
11	WATER CONTROL PANEL (NOTE 2)	4/150MM^2 ,1/35MM^2 G, 78MM C	3	200 A	200 A	—	—
12	POWER PANEL FUTURE WAREHOUSE	—	3	150 A	100 A	—	—
13	SPARE	—	3	150 A	100 A	—	—
		TOTAL:					

NOTES:

1. PANEL DESIGNED, SPECIFIED, AND PROVIDED BY EQUIPMENT MANUFACTURER FOR FUEL PACKAGE.
2. PANEL DESIGNED, SPECIFIED, AND PROVIDED BY EQUIPMENT MANUFACTURER FOR WATER PUMP PACKAGE.

SITE ADAPT CONSTRUCTION PLANS

REV	DATE	BY	SUB	APP	DESCRIPTION
0	06/30/10				

AFGHAN NATIONAL SECURITY FORCE
COMPREHENSIVE PLAN FOR FACILITIES DEVELOPMENT

MINISTRY OF INTERIOR (MoI) – AFGHAN NATIONAL POLICE
PROVINCIAL FIRE STATION – TYPE-B

ELECTRICAL SCHEDULES

DESIGNED: DESIGNED
DRAWN: C.F. SANDERS
CHECKED: B. CRAWFORD
IN CHARGE: D. WHEELER
DATE: 30 JUNE 2010

SCALE: AS SHOWN

PROJECT NO. 6151-08-0328

00-E-602

\\tom-fs1\cos\EAC\Engineering\000 FY 2011 RFPs in Progress\ANP\STANDARD TO DEVELOP Fire Station\MACTEC\CAD\00-E-602.dwg 03/14/2011 8:40pm HZAENLRF

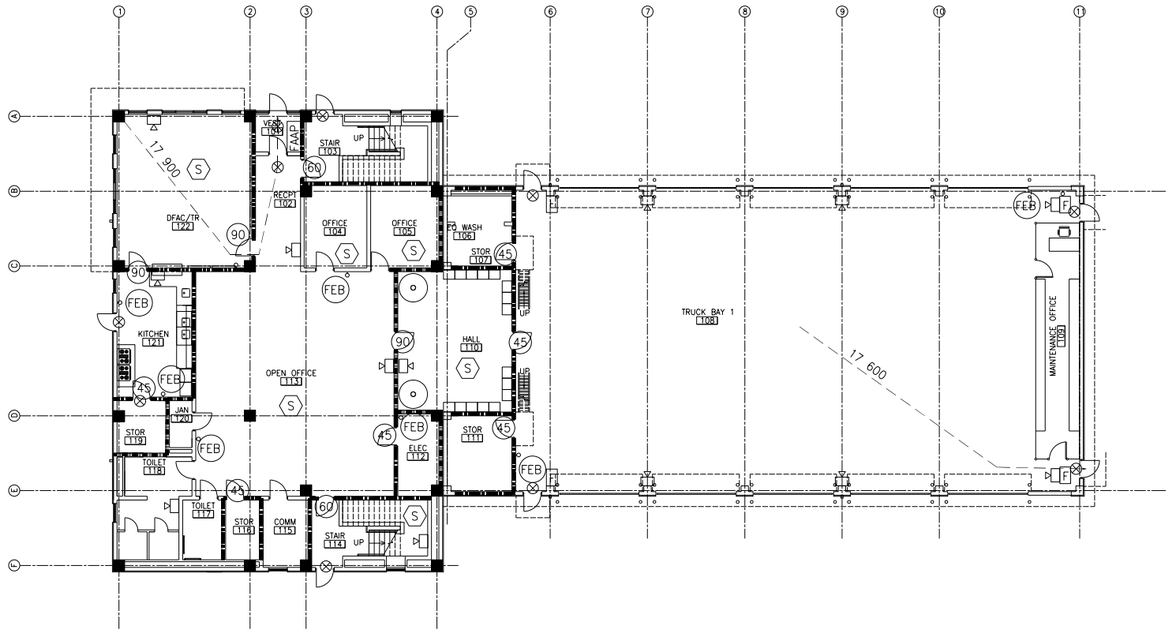

1 FIRST FLOOR LIFE SAFETY PLAN

01-A-001 SCALE 1:150 | 01-A-101

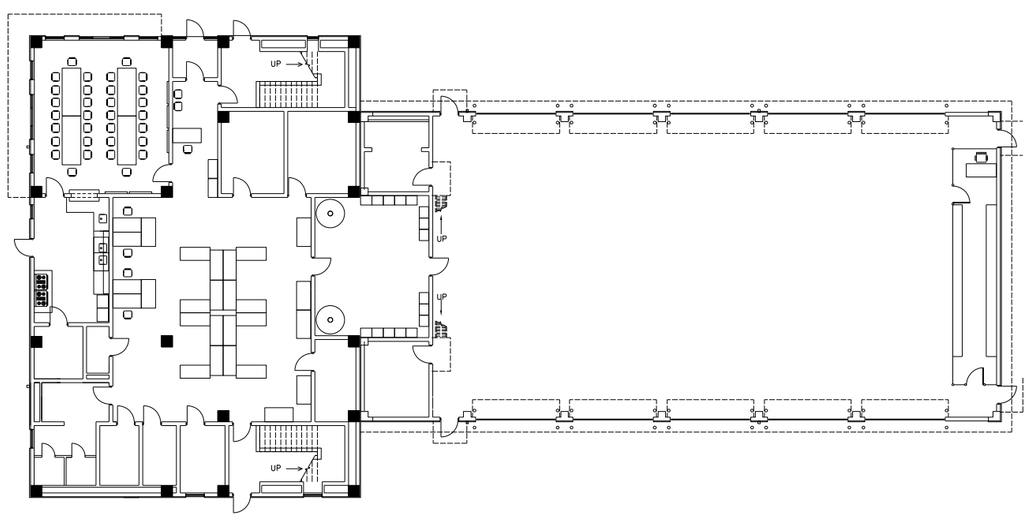

5 FIRST FLOOR FURNITURE LAYOUT PLAN

01-A-001 SCALE 1:150

1-HOUR FIRE RATED WALL
1-HOUR FIRE AND SMOKE RATED WALL
2-HOUR FIRE RATED WALL
2-HOUR FIRE AND SMOKE RATED WALL

EXIT SIGN
FIRE ALARM PULL STATION
FIRE ALARM STROBE
FIRE ALARM HORN
FIRE ALARM HORN/STROBE
FIRE ALARM CONTROL PANEL
SMOKE DETECTOR
CO_2 DETECTOR
EMERGENCY LIGHT
TRAVEL DISTANCE
FIRE EXTINGUISHER AND CABINET
FIRE EXTINGUISHER AND BRACKET
DOOR RATING (MINUTES)
TRAVEL DISTANCE TO FEC

4 LIFE SAFETY LEGEND

01-A-001 SCALE NTS

2006 INTERNATIONAL BUILDING CODE
2006 INTERNATIONAL MECHANICAL CODE
2006 INTERNATIONAL PLUMBING CODE
2006 INTERNATIONAL FIRE CODE
2008 NATIONAL ELECTRICAL CODE
1992 ADAAG ACCESSIBILITY CODE
(TO EXTENT FEASIBLE)

AREA:
FIRST FLOOR:
CORE: 498 SQ/M
TRUCK BAY 1: 500 SQ/M

TOTAL: 998 SQ/M

SECOND FLOOR:
CORE: 498 SQ/M
TOTAL: 498 SQ/M

CONSTRUCTION TYPE:
IBC: TYPE I, PROTECTED, NON-SPRINKLERED
NFPA: TYPE 1(3,3,2) NON-SPRINKLERED
OCCUPANT LOAD (BY AREA):

FIRST FLOOR

TYPE	NAME	AREA	FACTOR	PERSONS
ASSEMBLY	DINING	58.4	1.4	42
BUSSINESS	CORE	490	9.3	53
STORAGE	BAY	500	46.5	11
	SUBTOTAL			106

SECOND FLOOR

RESIDENTIAL	CORE	498	18.6	27
	SUBTOTAL			27
	BUILDING TOTAL			133

REQUIRED RATINGS:

GARAGE BAYS:	2 HR
KITCHEN:	2 HR
DINING:	2 HR
EGRESS STAIR:	1 HR
STORAGE:	1 HR
DAY ROOM(MWR):	1 HR
LOCKER ROOM:	1 HR

TRAVEL DISTANCE(MAX): 23M (W/IN GUESTROOM OR SUITE)

3 APPLICABLE CODES

01-A-001 SCALE NTS

1. BY APPLICABLE CODES, BUILDING FIRE SPRINKLER SYSTEM IS REQUIRED. HOWEVER, THIS CANNOT BE SUPPORTED WITHIN AFGHANISTAN. THEREFORE, CONSTRUCTION TYPE AND RATED SEPARATIONS HAVE BEEN INCREASED TO OFFER ADDITIONAL PROTECTION.
2. BY APPLICABLE CODES, A SPECIAL FIRE SUPPRESSION SYSTEM IS REQUIRED AT KITCHEN EXHAUST HOOD. HOWEVER, THIS CANNOT BE SUPPORTED WITHIN AFGHANISTAN. THEREFORE, ADDITIONAL FIRE EXTINGUISHERS HAVE BEEN PROVIDED TO OFFER ADDITIONAL PROTECTION.

2 LIFE SAFETY NOTES

01-A-001 SCALE NTS

REV	DATE	BY	SUB	APP	DESCRIPTION
0	06/30/10				SITE ADAPT CONSTRUCTION PLANS

DESIGNED K. BASS
DRAWN C. SALEEBY
CHECKED K. BASS
IN CHARGE D. WHEELER
DATE 30 JUNE 2010

AFGHAN NATIONAL SECURITY FORCE
COMPREHENSIVE PLAN FOR FACILITIES DEVELOPMENT

MINISTRY OF INTERIOR (MoI) – AFGHAN NATIONAL POLICE
PROVINCIAL FIRE STATION – TYPE-B

FIRST FLOOR LIFE SAFETY PLAN

SCALE AS SHOWN

PROJECT NO. 6151-08-0328

01-A-001

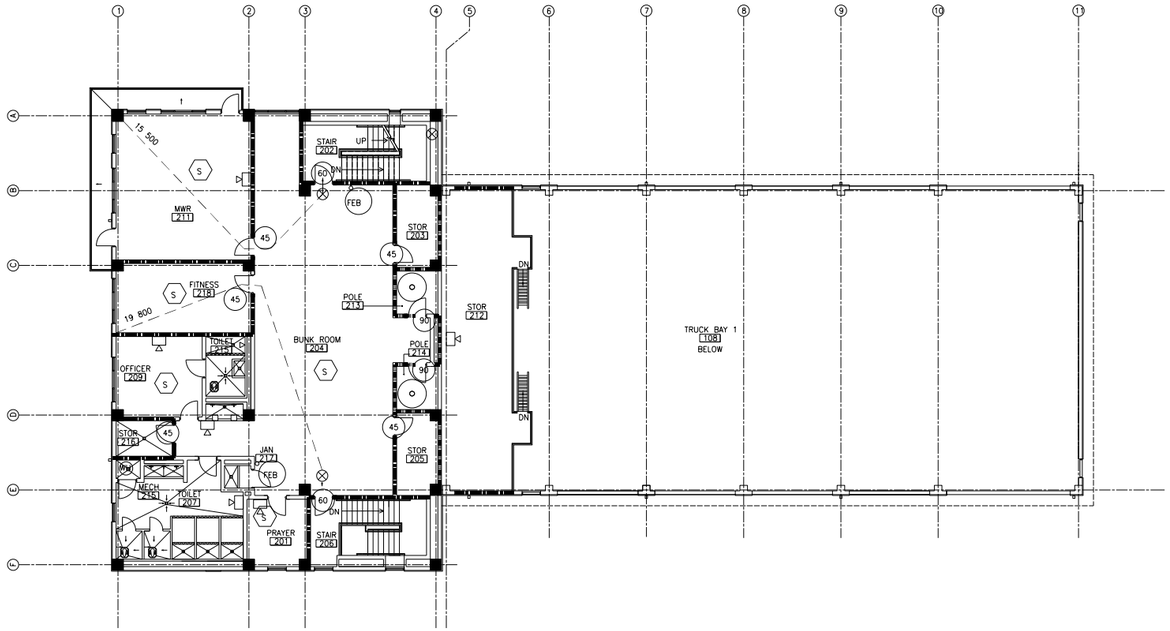

1 SECOND FLOOR LIFE SAFETY PLAN

01-A-002 SCALE 1:150 | 01-A-002

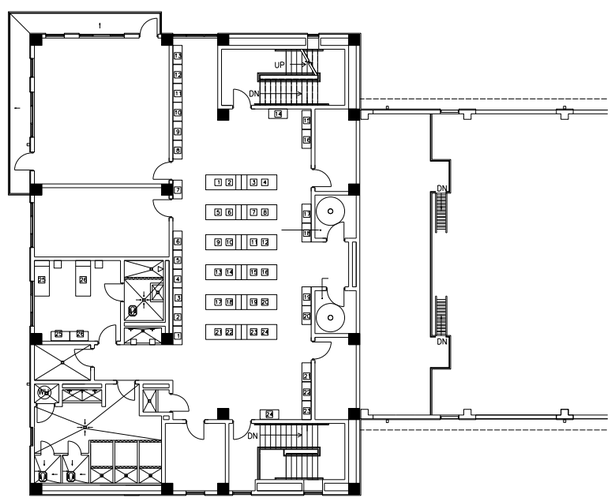

5 SECOND FLOOR FURNITURE LAYOUT PLAN

01-A-002 SCALE 1:150 | 01-A-002

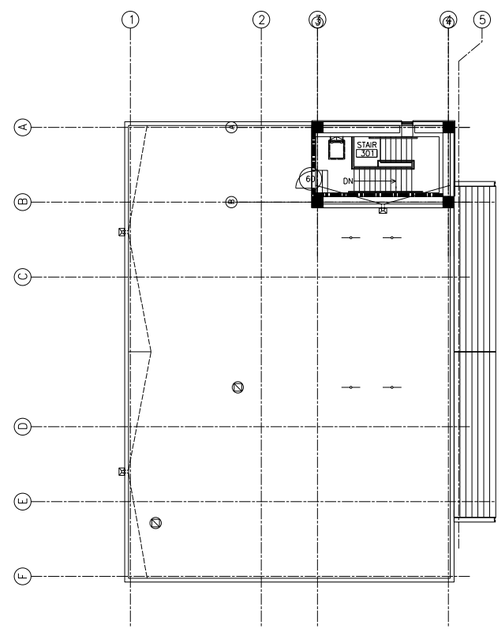

2 THIRD FLOOR LIFE SAFETY PLAN

01-A-002 SCALE 1:150 | 01-A-002

1-HOUR FIRE RATED WALL
1-HOUR FIRE AND SMOKE RATED WALL
2-HOUR FIRE RATED WALL
2-HOUR FIRE AND SMOKE RATED WALL
EXIT SIGN
FIRE ALARM PULL STATION
FIRE ALARM STROBE
FIRE ALARM HORN
FIRE ALARM HORN/STROBE — F
FIRE ALARM CONTROL PANEL
SMOKE DETECTOR
CO_2 DETECTOR
EMERGENCY LIGHT
TRAVEL DISTANCE
FIRE EXTINGUISHER AND CABINET — FACP
FIRE EXTINGUISHER AND BRACKET
DOOR RATING (MINUTES) — S
TRAVEL DISTANCE TO FEC — C
50
FEC
FEB
60
50

4 LIFE SAFETY LEGEND

01-A-002 SCALE NTS

2006 INTERNATIONAL BUILDING CODE
2006 INTERNATIONAL MECHANICAL CODE
2006 INTERNATIONAL PLUMBING CODE
2006 INTERNATIONAL FIRE CODE
2008 NATIONAL ELECTRICAL CODE
1992 ADAAG ACCESSIBILITY CODE
(TO EXTENT FEASIBLE)

AREA:
FIRST FLOOR:
CORE: 498 SQ/M
TRUCK BAY 1: 500 SQ/M

TOTAL: 998 SQ/M

SECOND FLOOR:
CORE: 498 SQ/M
TOTAL: 498 SQ/M

CONSTRUCTION TYPE:
IBC: TYPE I, PROTECTED, NON-SPRINKLERED
NFPA: TYPE 1(3,3,2) NON-SPRINKLERED
OCCUPANT LOAD (BY AREA):

FIRST FLOOR

TYPE	NAME	AREA	FACTOR	PERSONS
ASSEMBLY	DINING	58.4	1.4	42
BUSSINESS	CORE	490	9.3	53
STORAGE	BAY	500	46.5	11
	SUBTOTAL			106

SECOND FLOOR

RESIDENTIAL	CORE	498	18.6	27
	SUBTOTAL			27
	BUILDING TOTAL			133

REQUIRED RATINGS:
GARAGE BAYS: 2 HR
KITCHEN: 2 HR
DINING: 2 HR
EGRESS STAIR: 1 HR
STORAGE: 1 HR
DAY ROOM(MWR): 1 HR
LOCKER ROOM: 1 HR

TRAVEL DISTANCE(MAX): 23M (W/IN GUESTROOM OR SUITE)

3 APPLICABLE CODES

01-A-002 SCALE NTS

1. BY APPLICABLE CODES, BUILDING FIRE SPRINKLER SYSTEM IS REQUIRED. HOWEVER, THIS CANNOT BE SUPPORTED WITHIN AFGHANISTAN. THEREFORE, CONSTRUCTION TYPE AND RATED SEPARATIONS HAVE BEEN INCREASED TO OFFER ADDITIONAL PROTECTION.
2. BY APPLICABLE CODES, A SPECIAL FIRE SUPPRESSION SYSTEM IS REQUIRED AT KITCHEN EXHAUST HOOD. HOWEVER, THIS CANNOT BE SUPPORTED WITHIN AFGHANISTAN. THEREFORE, ADDITIONAL FIRE EXTINGUISHERS HAVE BEEN PROVIDED TO OFFER ADDITIONAL PROTECTION.

2 LIFE SAFETY NOTES

01-A-002 SCALE NTS

REV	DATE	BY	SUB/APP	DESCRIPTION
0	06/30/10			SITE ADAPT CONSTRUCTION PLANS

DESIGNED K. BASS
DRAWN C. SALEEBY
CHECKED K. BASS
IN CHARGE D. WHEELER
DATE 30 JUNE 2010

AFGHAN NATIONAL SECURITY FORCE
COMPREHENSIVE PLAN FOR FACILITIES DEVELOPMENT

MINISTRY OF INTERIOR (MoI) – AFGHAN NATIONAL POLICE
PROVINCIAL FIRE STATION – TYPE-B

SECOND FLOOR LIFE SAFETY PLAN

SCALE AS SHOWN

PROJECT NO. 6151-08-0328

01-A-002

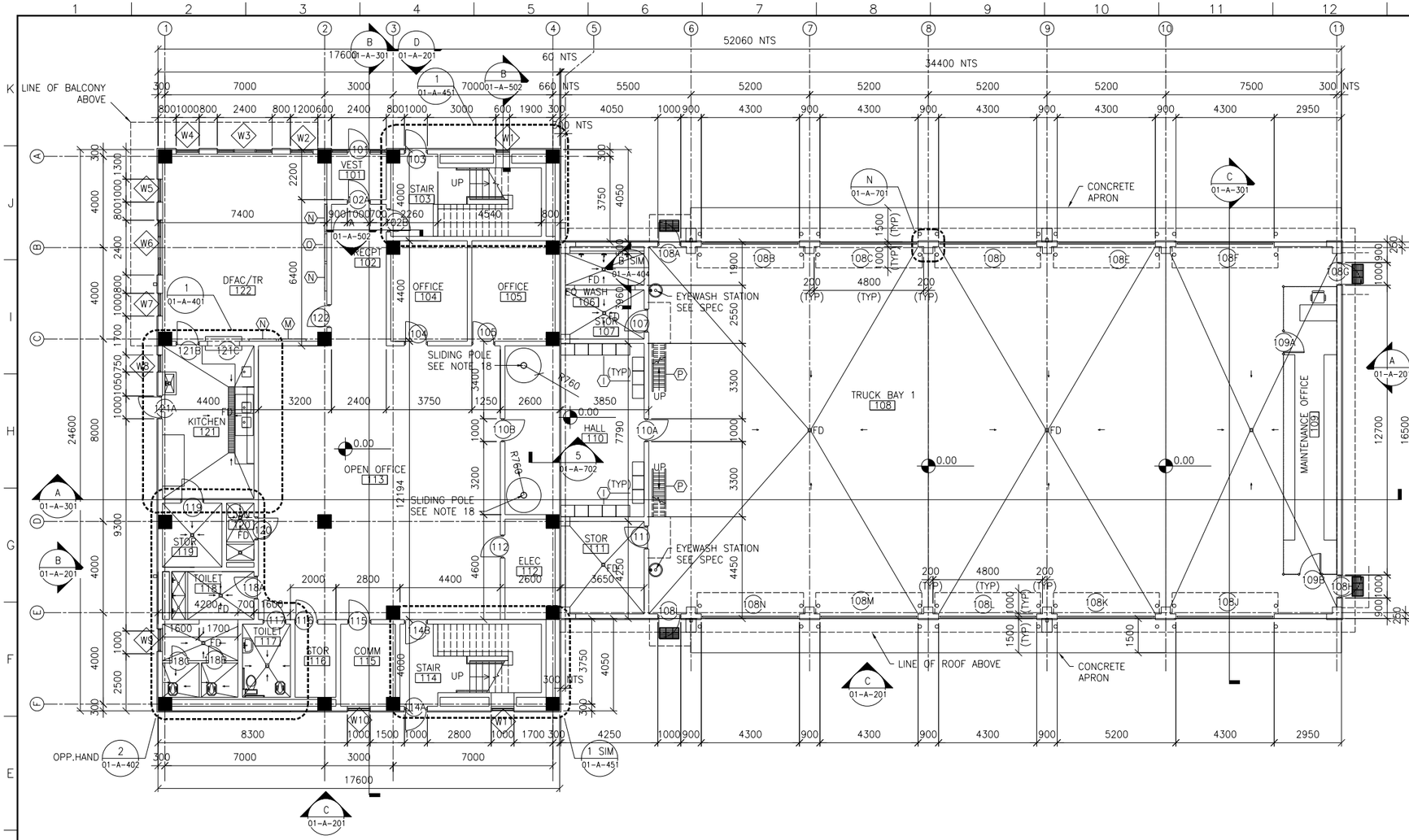

1. ALL WALLS ALIGN WITH FACE OF COLUMN U.N.O.
2. ALL WALLS ARE 200MM CMU U.N.O.
3. DIMENSIONS ARE TO:
3.1. CENTERLINE OF COLUMN
3.2. FACE OF CMU
4. ALL DOORS ARE 200MM FROM ADJACENT WALL U.N.O.
5. ALL 200MM CMU WALLS AND ALL RATED WALLS EXTEND TO STRUCTURE ABOVE WITH COMPRESSION FILLER AT TOP. PROVIDE RATED FILLER IN RATED WALL LOCATIONS.
6. ALL 100MM CMU WALLS EXTEND 2000MM A.F.F. UNLESS IN RATED LOCATION.
7. LOWEST LEVEL FINISH FLOOR ELEVATION IS 0.00 ELEVATION. CONTRACTOR SHALL COORDINATE WITH ACTUAL CIVIL FINISH FLOOR ELEVATION.
8. ALL DIMENSIONS ARE IN MILLIMETER U.N.O.
9. ALL EXTERIOR PASS DOORS RECEIVE CONC PAD AND WALK OFF GRATE. SEE DETAIL4/01-A-702
10. EASTERN TOILETS ARE DESIGNED TO ALLOW 90° TURN IN PLACE TO ENSURE NORTH-SOUTH ALIGNMENT. SEE DETAIL 1/01-A-402
11. ALL ROOMS WITH FLOOR DRAINS ARE TO HAVE FLOOR SLOPE TO DRAIN AT 1:50 SLOPE.
12. OWNER WILL DETERMINE NUMBER AND PLACEMENT OF WOOD BRNING STOVES. CONTRACTOR TO PROVIDE ROUGH-IN OPENINGS AND RATED CHASES AS REQUIRED FOR PROPER INSTALLATION.
13. PROVIDE ELASTOMERIC SHEET MEMBRANE UNDER TILE IN ALL WET AREAS. SEE SPECS.
14. FOR ALL RATED WALL LOCATIONS, SEE LIFE SAFETY PLANS, 01-A-001 AND 01-A-002.
15. FIRE EXTINGUISHERS ARE ABC DRY CHEMICAL 4A 60BC GENERAL PURPOSE AT ALL LOCATIONS EXCEPT AS FOLLOWS:
15.1. ADJACENT KITCHEN HOOD - PROVIDE 2 SUITABLE FOR GREASE FIRE.
15.2. IN ELECTRICAL ROOM - PROVIDE 1 CO_2.
16. ALL EXTERIOR DOORS TO RECEIVE A CANOPY - SIZE TO MATCH SLAB ON GRADE.
17. PROVIDE WATERPROOFING STAIN/PAINT TO TOP OF ELEVATED BALCONY SLABS.
18. SLIDING POLE IS MODEL 19 STATIONARY POLE BY MCINTIRE BRASS WORKS WWW.SLIDEPOLE.COM (617)872 1152- PROVIDE STANDARD LANDING MAT. OR APPROVED EQUAL.

5 FLOOR PLAN NOTES

01-A-101 SCALE NTS

W15	WINDOW OR LOUVER NUMBER
217	DOOR NUMBER
N	EQUIPMENT NUMBER
STAIR 217	ROOM NAME ROOM NUMBER
FD	FLOOR DRAIN
DS	DOWN SPOUT
	FIRE EXTINGUISHER
0.00	FINISH FLOOR ELEVATION
	WOOD BURNING STOVE
→	INDICATES SLOPE DOWN 1.5% U.N.O.

1 FIRST FLOOR PLAN

01-A-101 SCALE 1:100

1000MM 0 5000MM

4 FLOOR PLAN LEGEND

01-A-101 SCALE NTS

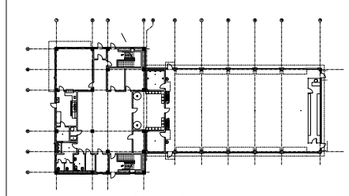

1/01-A-101

3 KEY PLAN

01-A-101 SCALE NTS

REV	DATE	BY	DESCRIPTION
0	06/30/10	SUBLAPP	SITE ADAPT CONSTRUCTION PLANS

DESIGNED K. BASS
DRAWN C. SALEEBY
CHECKED K. BASS
IN CHARGE D. WHEELER
DATE 30 JUNE 2010

AFGHAN NATIONAL SECURITY FORCE
COMPREHENSIVE PLAN FOR FACILITIES DEVELOPMENT

MINISTRY OF INTERIOR (MoI) - AFGHAN NATIONAL POLICE
PROVINCIAL FIRE STATION - TYPE-B

FIRST FLOOR PLAN

SCALE AS SHOWN

PROJECT NO. 6151-08-0328

01-A-101

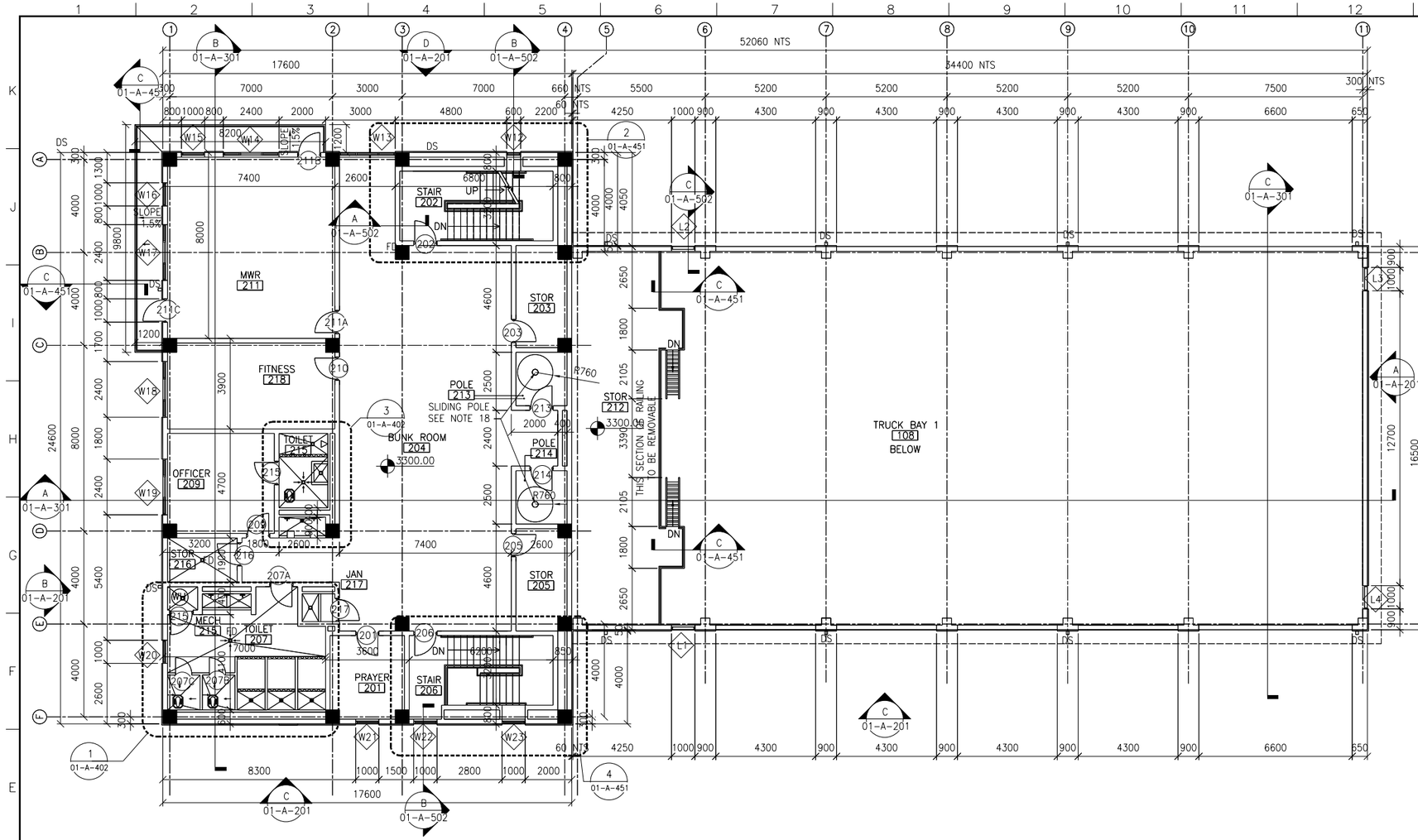

1 SECOND FLOOR PLAN
01-A-102 SCALE 1:100

1. ALL WALLS ALIGN WITH FACE OF COLUMN U.N.O.
2. ALL WALLS ARE 200MM CMU U.N.O.
3. DIMENSIONS ARE TO:
3.1. CENTERLINE OF COLUMN
3.2. FACE OF CMU
4. ALL DOORS ARE 200MM FROM ADJACENT WALL U.N.O.
5. ALL 200MM CMU WALLS AND ALL RATED WALLS EXTEND TO STRUCTURE ABOVE WITH COMPRESSION FILLER AT TOP. PROVIDE RATED FILLER IN RATED WALL LOCATIONS.
6. ALL 100MM CMU WALLS EXTEND 2000MM A.F.F. UNLESS IN RATED LOCATION.
7. LOWEST LEVEL FINISH FLOOR ELEVATION IS 0.00 ELEVATION. CONTRACTOR SHALL COORDINATE WITH ACTUAL CIVIL FINISH FLOOR ELEVATION.
8. ALL DIMENSIONS ARE IN MILLIMETER U.N.O.
9. ALL EXTERIOR PASS DOORS RECEIVE CONC PAD AND WALK OFF GRATE. SEE DETAIL
10. EASTERN TOILETS ARE DESIGNED TO ALLOW 90° TURN IN PLACE TO ENSURE NORTH-SOUTH ALIGNMENT. SEE DETAIL
11. ALL ROOMS WITH FLOOR DRAINS ARE TO HAVE FLOOR SLOPE TO DRAIN AT 1:50 SLOPE.
12. OWNER WILL DETERMINE NUMBER AND PLACEMENT OF WOOD BRNING STOVES. CONTRACTOR TO PROVIDE ROUGH-IN OPENINGS AND RATED CHASES AS REQUIRED FOR PROPER INSTALLATION.
13. PROVIDE ELASTOMERIC SHEET MEMBRANE UNDER TILE IN ALL WET AREAS. SEE SPECS.
14. FOR ALL RATED WALL LOCATIONS, SEE LIFE SAFETY PLANS, 01-A-001 AND 01-A-002.
15. FIRE EXTINGUISHERS ARE ABC DRY CHEMICAL 4A 60BC GENERAL PURPOSE AT ALL LOCATIONS EXCEPT AS FOLLOWS:
15.1. ADJACENT KITCHEN HOOD - PROVIDE 2.
15.2. IN ELECTRICAL ROOM - PROVIDE 1 CO_2.
16. ALL EXTERIOR DOORS TO RECEIVE A CANOPY - SIZE TO MATCH SLAB ON GRADE.
17. PROVIDE WATERPROOFING STAIN/PAINT TO TOP OF ELEVATED BALCONY SLABS.
18. SLIDING POLE IS MODEL 19 STATIONARY POLE BY MCINTIRE BRASS WORKS WWW.SLIDEPOLE.COM (617)872 1152- PROVIDE STANDARD LANDING MAT. OR APPROVED EQUAL.

6 FLOOR PLAN NOTES
01-A-102 SCALE NTS

W15	WINDOW OR LOUVER NUMBER
217	DOOR NUMBER
N	EQUIPMENT NUMBER
STAIR 217	ROOM NAME / ROOM NUMBER
FD	FLOOR DRAIN
DS	DOWN SPOUT
	FIRE EXTINGUISHER
0.00	FINISH FLOOR ELEVATION
S	WOOD BURNING STOVE
→	INDICATES SLOPE DOWN 1.5% U.N.O.

5 FLOOR PLAN LEGEND
01-A-102 SCALE NTS

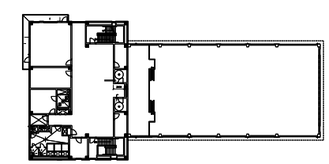

4 KEY PLAN
01-A-102 SCALE NTS

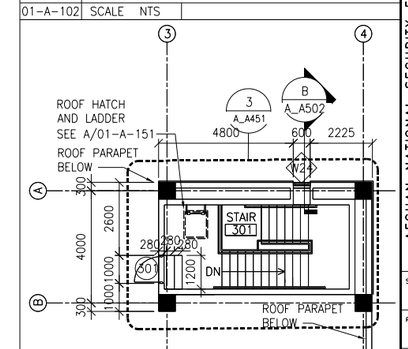

3 THIRD FLOOR PLAN
01-A-102 SCALE 1:100

REV	DATE	BY	DESCRIPTION
0	06/30/10	SUBAPP	SITE ADAPT CONSTRUCTION PLANS

DESIGNED K. BASS
DRAWN C. SALEEBY
CHECKED K. BASS
IN CHARGE D. WHEELER
DATE 30 JUNE 2010

AFGHAN NATIONAL SECURITY FORCE
COMPREHENSIVE PLAN FOR FACILITIES DEVELOPMENT
MINISTRY OF INTERIOR (MoI) - AFGHAN NATIONAL POLICE
PROVINCIAL FIRE STATION - TYPE-B
SECOND FLOOR PLAN

SCALE AS SHOWN
PROJECT NO. 6151-08-0328
01-A-102

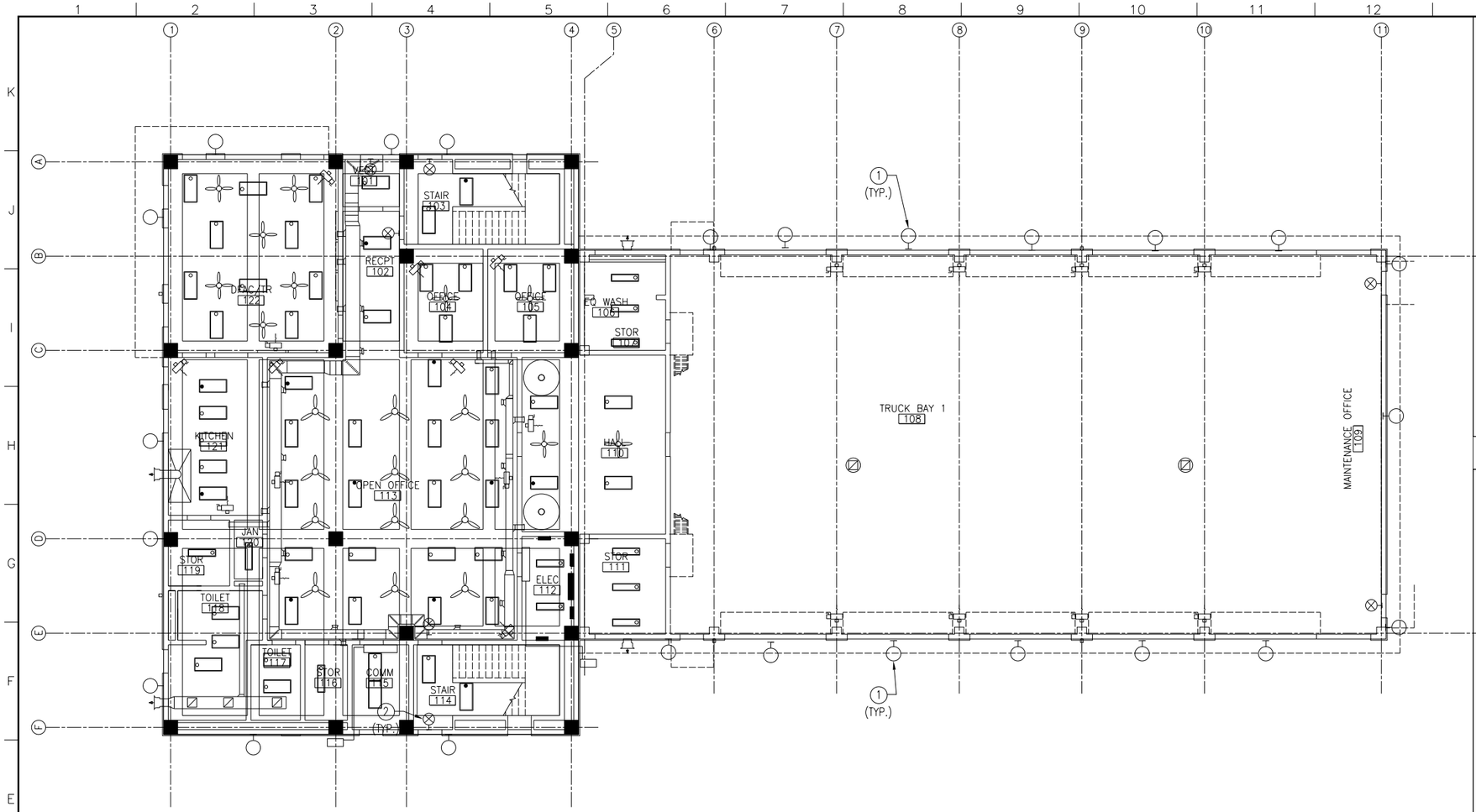

1. REFER TO ENGINEERING DRAWINGS FOR ADDITIONAL INFORMATION.
2. ROOMS WITH 'NOTE1' ARE TO RECEIVE SPRAY APPLIED INSULATION – APPLIED TO CONCRETE STRUCTURE ABOVE IN THICKNESS REQUIRED TO ACHIEVE R–13 RATING.

3 NOTES
SCALE NTS

CEILING FAN
FLOURESCENT LIGHT
FLOURESCENT LIGHT
FLOURESCENT LIGHT
EXIT LIGHT
EXTERIOR LIGHT

1 FIRST FLOOR REFLECTED CEILING PLAN
SCALE 1:100 01–A–101

2 LEGEND
SCALE NTS

REV	DATE	BY	SUB	APP	DESCRIPTION
0	06/30/10				SITE ADAPT CONSTRUCTION PLANS

DESIGNED K. BASS
DRAWN C. SALEEBY
CHECKED K. BASS
IN CHARGE D. WHEELER
DATE 30 JUNE 2010

AFGHAN NATIONAL SECURITY FORCE
COMPREHENSIVE PLAN FOR FACILITIES DEVELOPMENT

MINISTRY OF INTERIOR (MoI) – AFGHAN NATIONAL POLICE
PROVINCIAL FIRE STATION – TYPE–B

FIRST FLOOR REFLECTED CEILING PLAN

SCALE AS SHOWN

PROJECT NO. 6151–08–0328

01–A–111

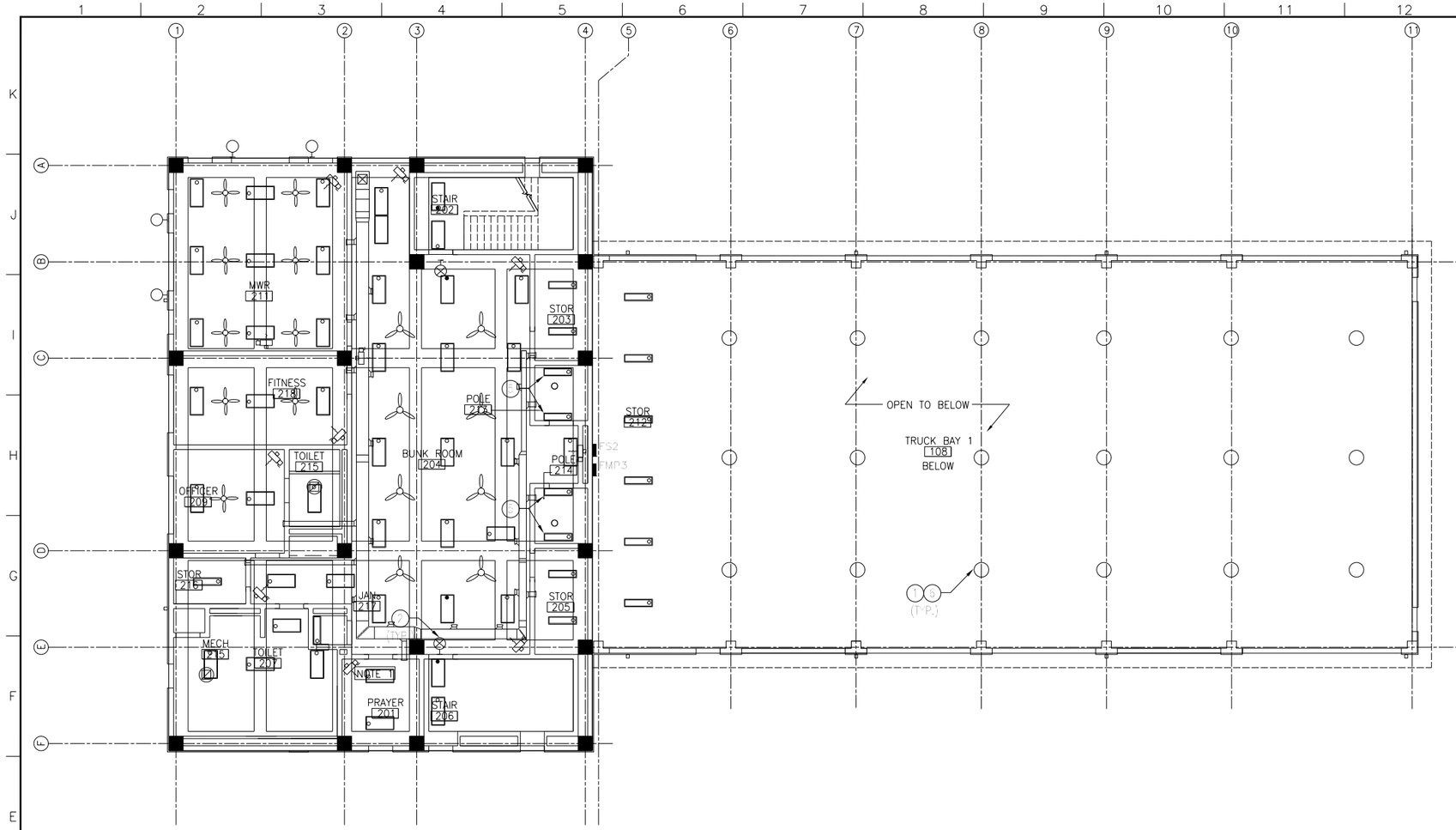

1. REFER TO ENGINEERING DRAWINGS FOR ADDITIONAL INFORMATION.
2. ROOMS WITH 'NOTE1' ARE TO RECEIVE SPRAY APPLIED INSULATION – APPLIED TO CONCRETE STRUCTURE ABOVE IN THICKNESS REQUIRED TO ACHIEVE R-13 RATING.

3 NOTES

01-A-112 SCALE NTS

CEILING FAN

FLOURESCENT LIGHT

FLOURESCENT LIGHT

FLOURESCENT LIGHT

EXIT LIGHT

EXTERIOR LIGHT

1 SECOND FLOOR REFLECTED CEILING PLAN

01-A-112 SCALE 1:100 | 01-A-102

2 LEGEND

01-A-112 SCALE NTS

REV	DATE	BY	SUB	APP	DESCRIPTION
0	06/30/10				SITE ADAPT CONSTRUCTION PLANS

DESIGNED K. BASS
DRAWN C. SALEEBY
CHECKED K. BASS
IN CHARGE D. WHEELER
DATE 30 JUNE 2010

AFGHAN NATIONAL SECURITY FORCE
COMPREHENSIVE PLAN FOR FACILITIES DEVELOPMENT

MINISTRY OF INTERIOR (MoI) – AFGHAN NATIONAL POLICE
PROVINCIAL FIRE STATION – TYPE-B

SECOND FLOOR REFLECTED CEILING PLAN

SCALE AS SHOWN

PROJECT NO. 6151-08-0328

01-A-112

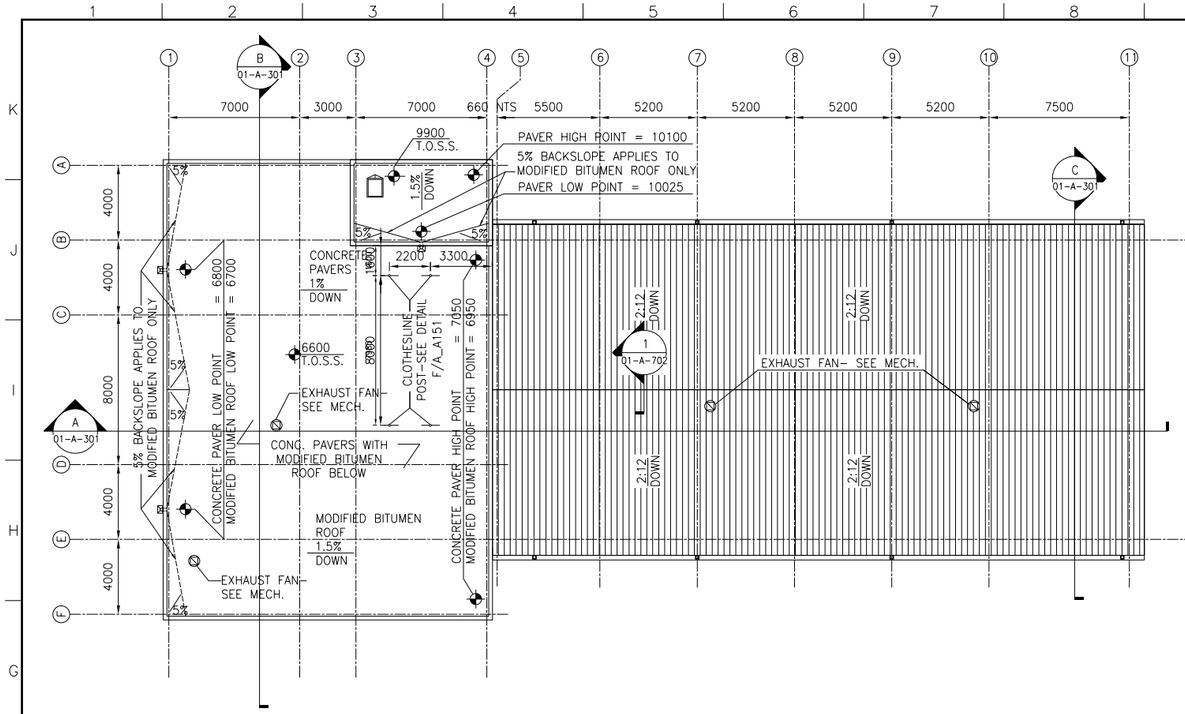

1 ROOF PLAN

01-A-151 SCALE 1:150 | 01-A-101, 01-A-102

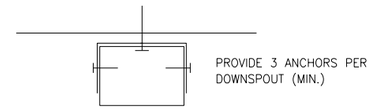

2 DOWNSPOUT ANCHOR

01-A-151 SCALE 1:5 | A_A101

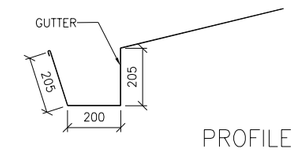

D GUTTER DETAIL

01-A-151 SCALE 1:10

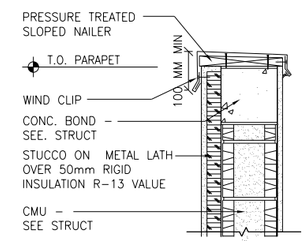

C PARAPET DETAIL

01-A-151 SCALE 1:10

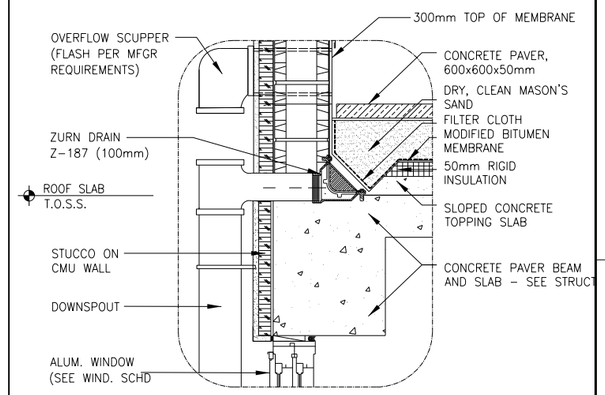

B ROOF DRAIN AND OVERFLOW SCUPPER

01-A-151 SCALE 1:10

TOP OF STRUCTURAL SLAB	T.O.S.S.
SLOPE DN	——
METAL ROOF	
CONCRETE PAVERS	
DOWNSPOUT	
PARAPET	
ROOF HATCH	

LEGEND

01-A-151 SCALE NTS

1. SEE ELEVATIONS FOR DOWNSPOUT LOCATIONS.
2. FLAT ROOF DASH LINES INDICATE MODIFIED BITUMEN ROOF SLOPE BENEATH CONCRETE PAVERS.
3. COORDINATE LOCATION OF ALL MECH, ELECT, PLUMBING EQUIPMENT AND PENETRATIONS.
4. SEE ELECTRICAL FOR LIGHTNING PROTECTION SYSTEM.
5. PROVIDE CONCRETE SPLASH BLOCK (450x600) AT ALL DOWNSPOUT LOCATIONS.

NOTES

01-A-151 SCALE NTS

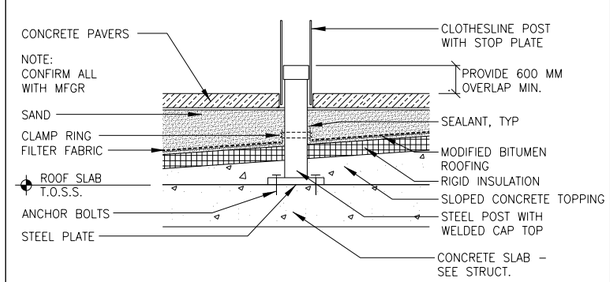

F CLOTHESLINE DETAIL

01-A-151 SCALE 1:10 | 01-A-151

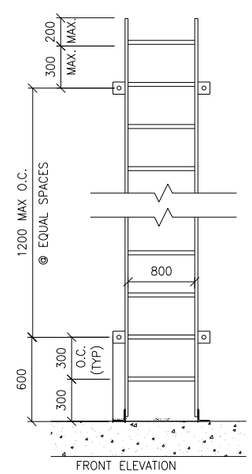

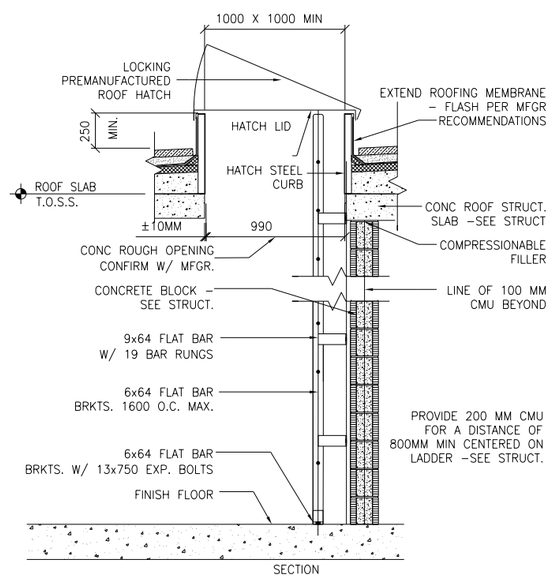

A ROOF HATCH DETAIL

01-A-151 SCALE 1:20

REV	DATE	BY	SUB	APP	DESCRIPTION
0	06/30/10				SITE ADAPT CONSTRUCTION PLANS

DESIGNED K. BASS
DRAWN C. SALEEBY
CHECKED K. BASS
IN CHARGE D. WHEELER
DATE 30 JUNE 2010

AFGHAN NATIONAL SECURITY FORCE COMPREHENSIVE PLAN FOR FACILITIES DEVELOPMENT

MINISTRY OF INTERIOR (MoI) – AFGHAN NATIONAL POLICE PROVINCIAL FIRE STATION – TYPE-B

ROOF PLAN & DETAILS

SCALE AS SHOWN

PROJECT NO. 6151-08-0328

01-A-151

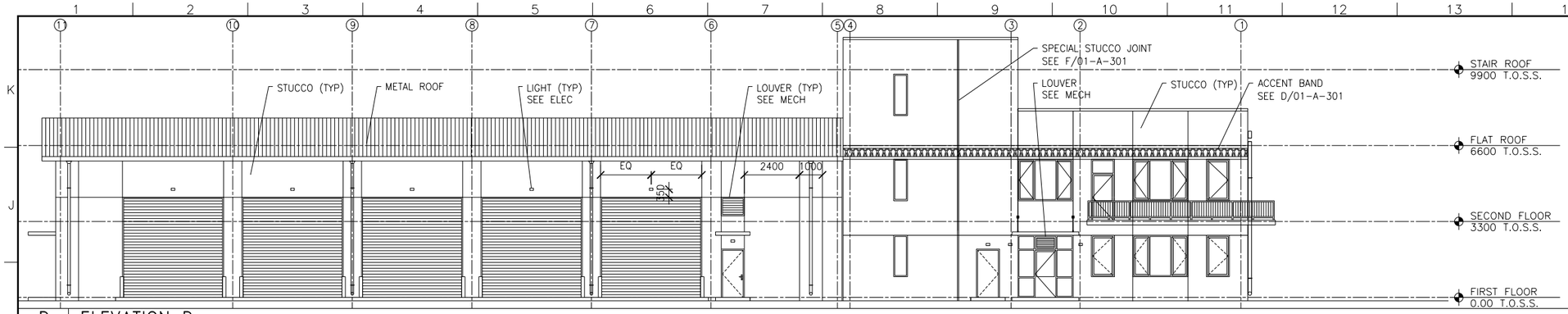

D ELEVATION D

01-A-201 SCALE 1:100 | 01-A-101, 01-A-102

1. ALL EXTERIOR WALLS ARE COLORED STUCCO.

2. ALL STUCCO JOINTS SHOWN ARE TYPICAL DETAIL E/01-A-301 U.N.O.

3. PLACE ALL LIGHTNING PROTECTION RUNS DOWN BUILDING ADJACENT DOWNSPOUTS.

E NOTES

01-A-201 SCALE NTS

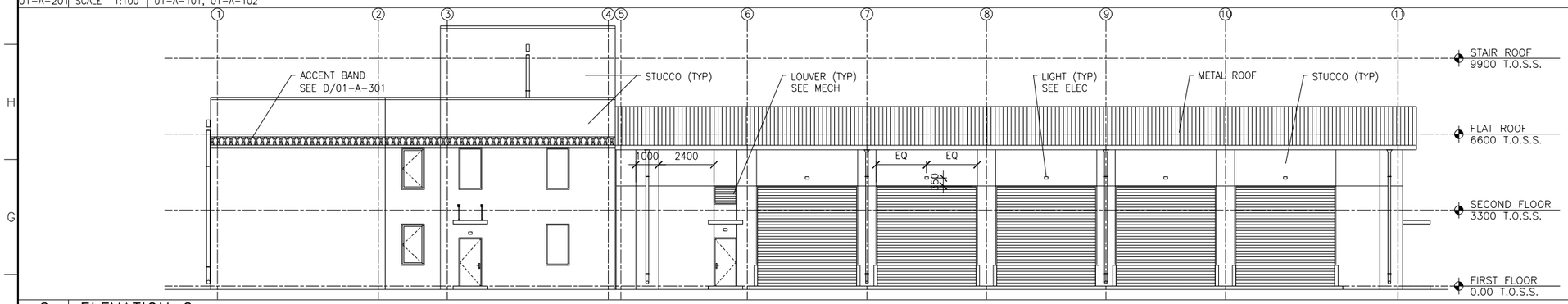

C ELEVATION C

01-A-201 SCALE 1:100 | 01-A-101, 01-A-102

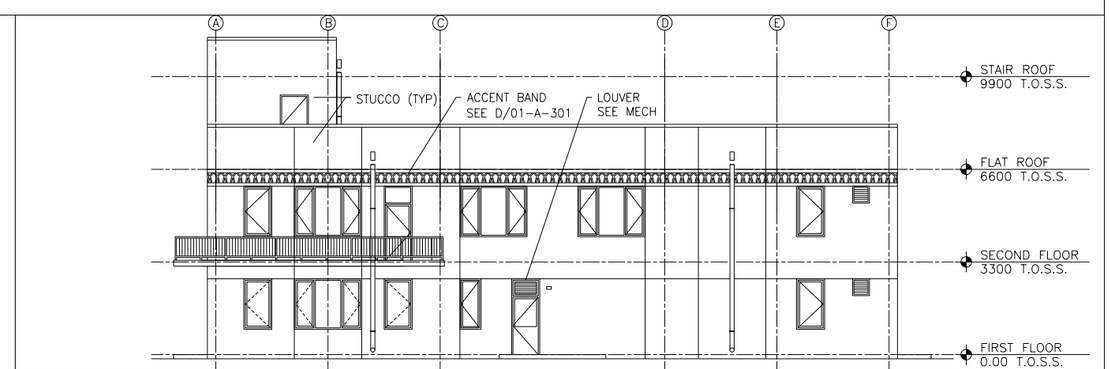

B ELEVATION B

01-A-201 SCALE 1:100 | 01-A-101, 01-A-102

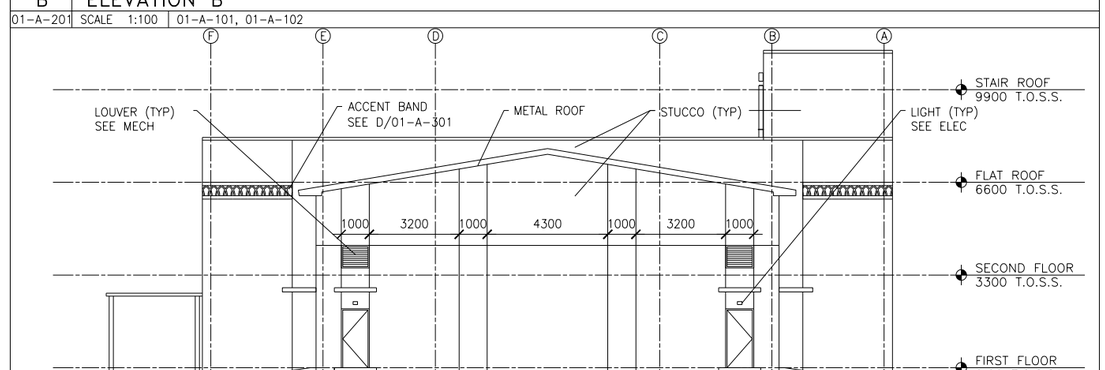

A ELEVATION A

01-A-201 SCALE 1:100 | 01-A-101, 01-A-102

REV	DATE	BY	SUB	APP	DESCRIPTION
0	06/30/10				SITE ADAPT CONSTRUCTION PLANS

DESIGNED K. BASS
DRAWN C. SALEEBY
CHECKED K. BASS
IN CHARGE D. WHEELER
DATE 30 JUNE 2010

AFGHAN NATIONAL SECURITY FORCE
COMPREHENSIVE PLAN FOR FACILITIES DEVELOPMENT

MINISTRY OF INTERIOR (MoI) – AFGHAN NATIONAL POLICE
PROVINCIAL FIRE STATION – TYPE-B

ELEVATIONS A,B,C,D

SCALE AS SHOWN

PROJECT NO. 6151-08-0328

01-A-201

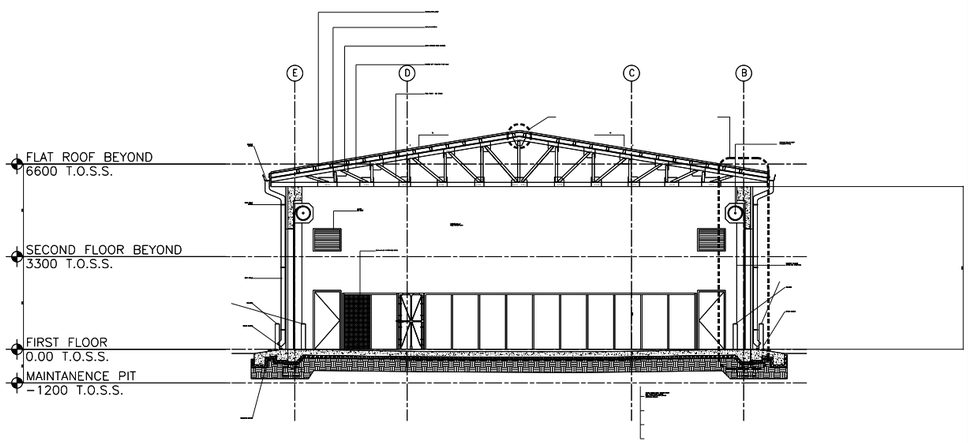

C BUILDING SECTION

01-A-301 SCALE 1:100 01-A-101, 01-A-102

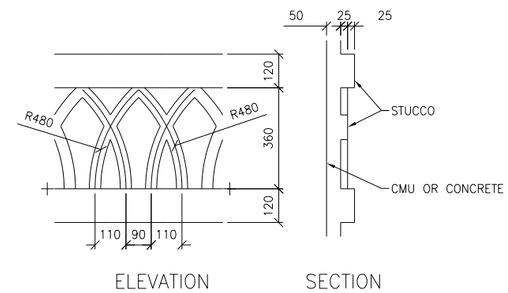

D STUCCO ACCENT BAND DETAIL

01-A-301 SCALE 1:10 01-A-201

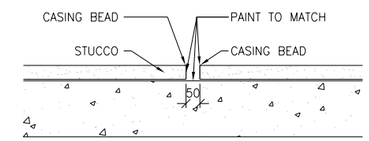

F SPECIAL STUCCO JOINT

01-A-301 SCALE 1:10 01-A-201

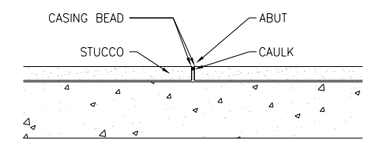

E TYPICAL STUCCO JOINT

01-A-301 SCALE 1:10 01-A-201

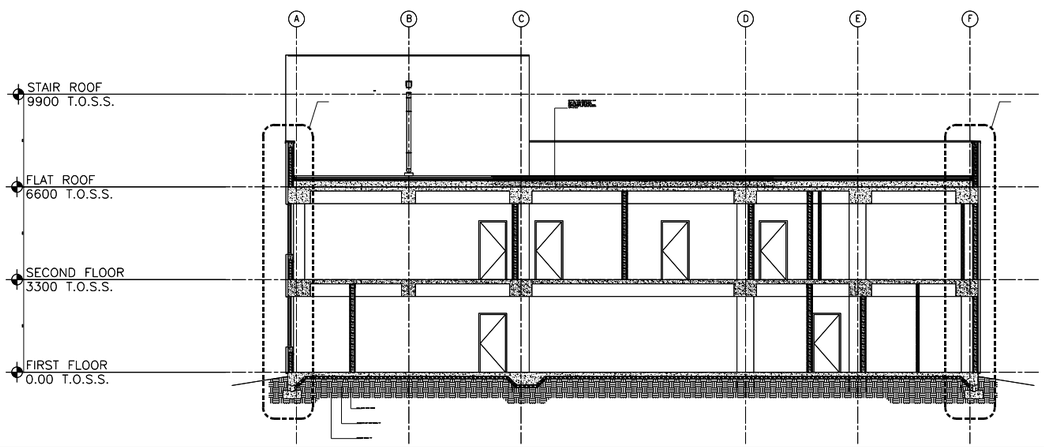

B BUILDING SECTION

01-A-301 SCALE 1:100 01-A-101, 01-A-102

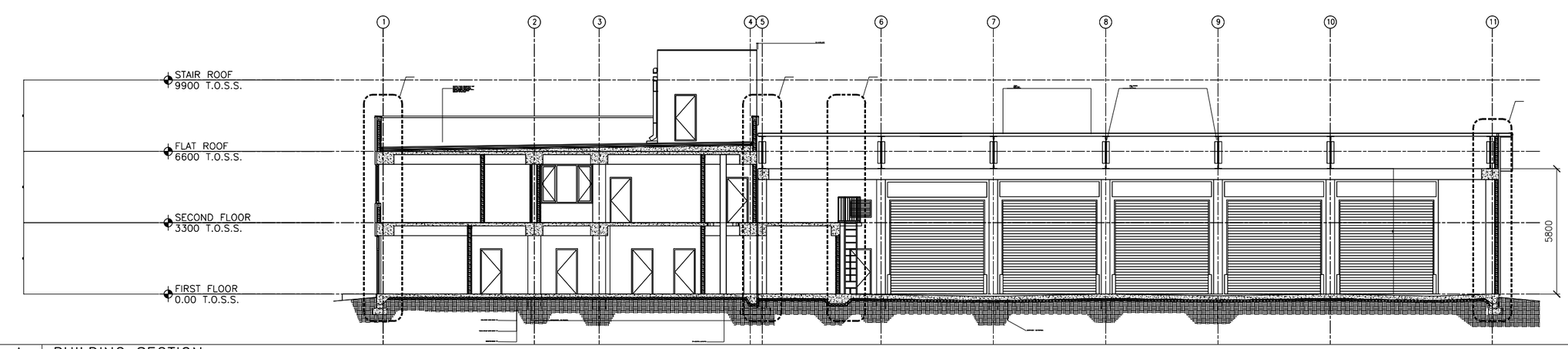

A BUILDING SECTION

01-A-301 SCALE 1:100 01-A-101, 01-A-102

REV	DATE	BY	SUB	APP	DESCRIPTION
0	06/30/10				SITE ADAPT CONSTRUCTION PLANS

DESIGNED K. BASS
DRAWN C. SALEEBY
CHECKED K. BASS
IN CHARGE D. WHEELER
DATE 30 JUNE 2010

AFGHAN NATIONAL SECURITY FORCE
COMPREHENSIVE PLAN FOR
FACILITIES DEVELOPMENT

MINISTRY OF INTERIOR (MoI) – AFGHAN NATIONAL POLICE
PROVINCIAL FIRE STATION – TYPE-B

BUILDING SECTIONS

SCALE
AS SHOWN

PROJECT NO.
6151-08-0328

01-A-301

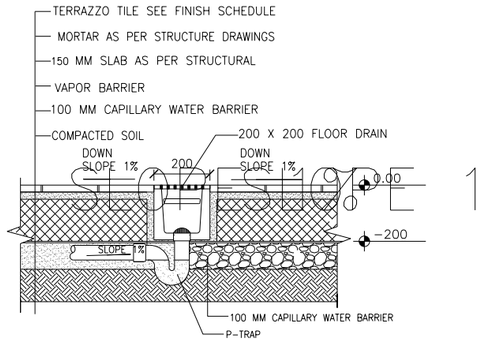

G TYP. FLOOR TRENCH DRAIN
01-A-401 SCALE 1:10 01-A-101

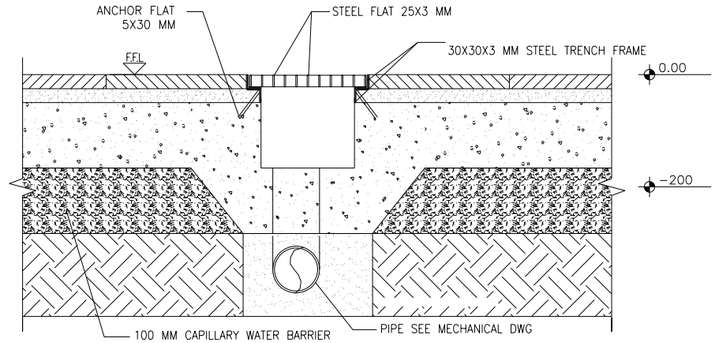

F TYP. FLOOR TRENCH SECTION
01-A-401 SCALE 1:5 01-A-101

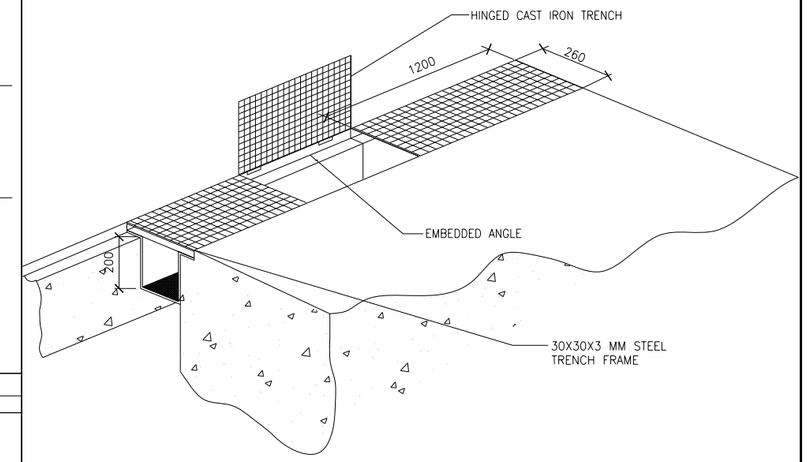

E TYP. FLOOR TRENCH DRAIN
01-A-401 SCALE NTS 01-A-101

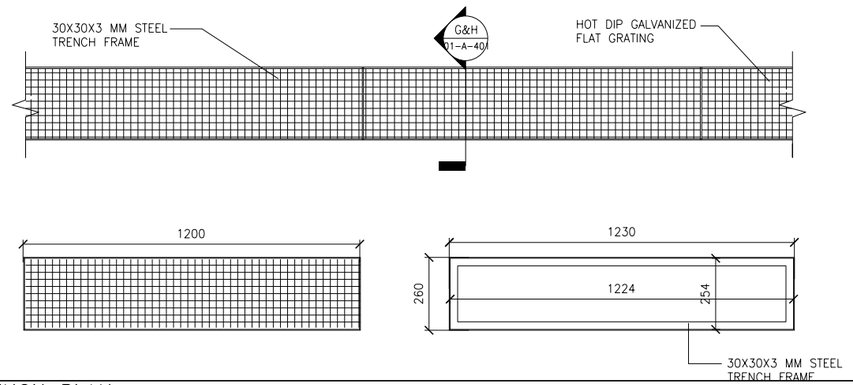

2 TYP. FLOOR TRENCH PLAN
01-A-401 SCALE 1:10 01-A-101

	EQUIPMENT SCHEDULE	SUPPLIED	INSTALLED	CONNECTED	REMARKS
A	RANGE	O	GC	GC	
B	POT WASH SINK	GC	GC	GC	
C	WASH SINK	GC	GC	GC	
D	HAND WASH SINK	GC	GC	GC	
E	STAINLESS STEEL COUNTER	O	GC	–	
G	REFRIGERATOR	O	O	GC	
H	FREEZER	O	O	GC	
I	LOCKER	GC	GC	–	
J	BUNK BED	O	O	–	
K	DESK	O	O	–	
L	CHAIR	O	O	–	
M	TACKBOARD	GC	GC	–	
N	MARKERBOARD	GC	GC	–	
O	CHALKBOARD	GC	GC	–	
P	SHIPS LADDER	GC	GC	–	
Q	SHELVING	GC	GC	–	

O = OWNER
GC = GENERAL CONTRACTOR

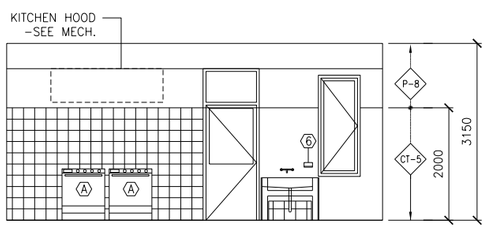

D KITCHEN INTERIOR ELEVATION
01-A-401 SCALE 1:50 01-A-101, 01-A-401

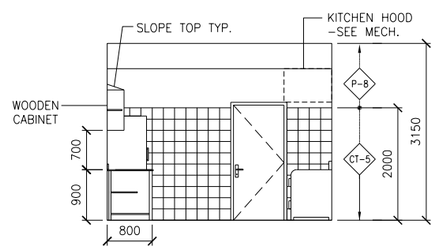

C KITCHEN INTERIOR ELEVATION
01-A-401 SCALE 1:50 01-A-101, 01-A-401

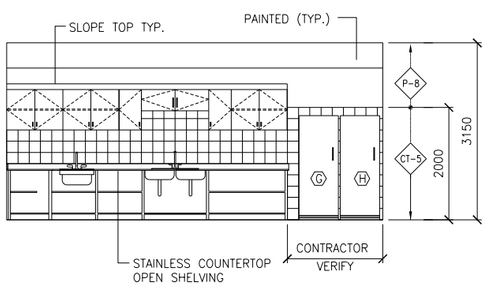

B KITCHEN INTERIOR ELEVATION
01-A-401 SCALE 1:50 01-A-101,01-A-401

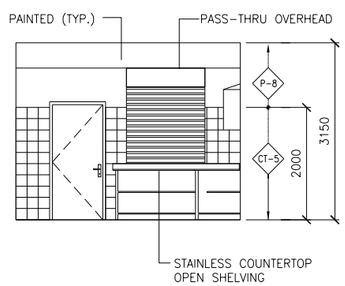

A KITCHEN INTERIOR ELEVATION
01-A-401 SCALE 1:50 01-A-101, 01-A-401

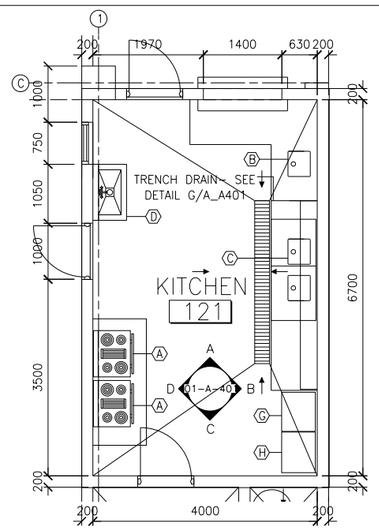

1 KITCHEN ENLARGED PLAN
01-A-401 SCALE 1:50 01-A-101

REV	DATE	BY	SUB.APP	DESCRIPTION
0	06/30/10			SITE ADAPT CONSTRUCTION PLANS

DESIGNED K. BASS
DRAWN C. SALEEBY
CHECKED K. BASS
IN CHARGE D. WHEELER
DATE 30 JUNE 2010

AFGHAN NATIONAL SECURITY FORCE
COMPREHENSIVE PLAN FOR FACILITIES DEVELOPMENT

MINISTRY OF INTERIOR (MoI) – AFGHAN NATIONAL POLICE
PROVINCIAL FIRE STATION – TYPE-B

ENLARGED KITCHEN FLOOR PLAN & ELEVATIONS

SCALE AS SHOWN

PROJECT NO. 6151-08-0328

01-A-401

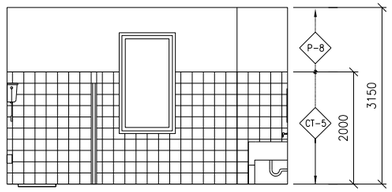

O TOILET & SHOWER INTERIOR ELEVATION
01-A-402 SCALE 1:50 01-A-402

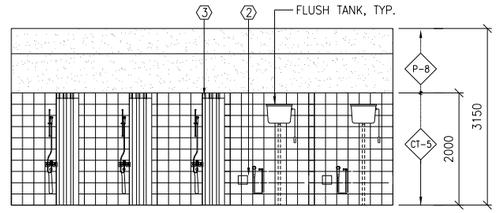

N TOILET & SHOWER ELEVATION
01-A-402 SCALE 1:50 01-A-402

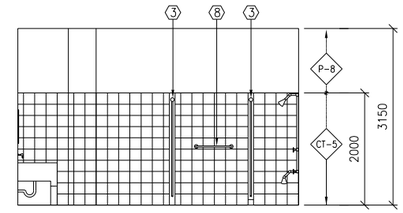

M TOILET & SHOWER ELEVATION
01-A-402 SCALE 1:50 01-A-402

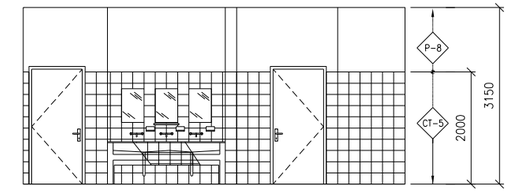

L TOILET & SHOWER ELEVATION
01-A-402 SCALE 1:50 01-A-402

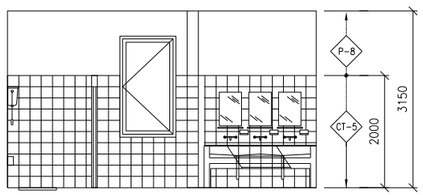

K TOILET INTERIOR ELEVATION
01-A-402 SCALE 1:50 01-A-402

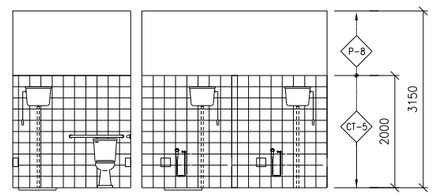

J TOILET INTERIOR ELEVATION
01-A-402 SCALE 1:50 01-A-402

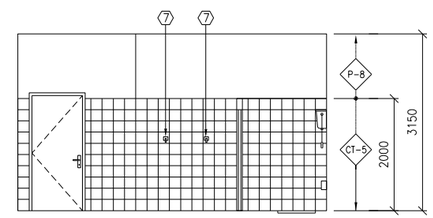

I TOILET INTERIOR ELEVATION
01-A-402 SCALE 1:50 01-A-402

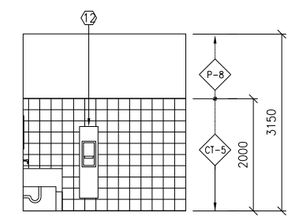

H TOILET INTERIOR ELEVATION
01-A-402 SCALE 1:50 01-A-402

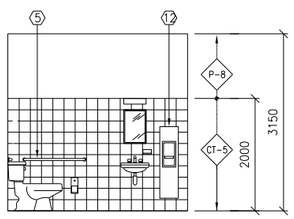

G TOILET INTERIOR ELEVATION
01-A-402 SCALE 1:50 01-A-402

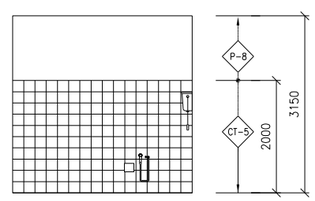

F TOILET INTERIOR ELEVATION
01-A-402 SCALE 1:50 01-A-402

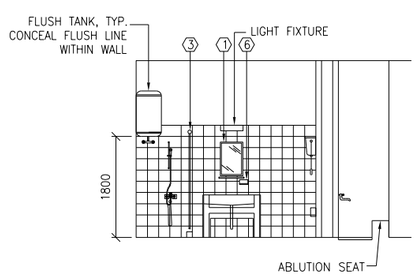

E TOILET INTERIOR ELEVATION
01-A-402 SCALE 1:50 01-A-402

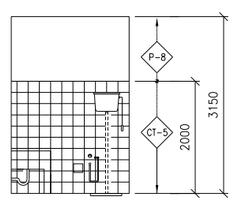

D JANITOR ELEVATION
01-A-402 SCALE 1:50 01-A-402

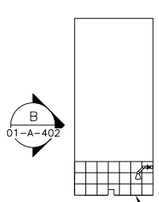

C JANITOR ELEVATION
01-A-402 SCALE 1:50 01-A-402

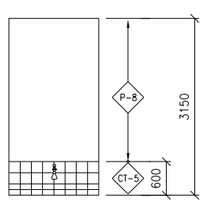

B JANITOR ELEVATION
01-A-402 SCALE 1:50 01-A-402

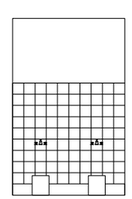

A ABLUTION ELEVATION
01-A-402 SCALE 1:50 01-A-402

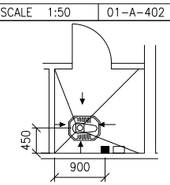

IF PLAN NORTH IS TRUE EAST OR WEST, ORIENT EASTERN TOILETS THUS.

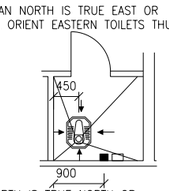

IF PLAN NORTH IS TRUE NORTH OR SOUTH, ORIENT EASTERN TOILETS THUS.

4 TOILET ALIGNMENT PLAN
01-A-402 SCALE 1:50 01-A-102

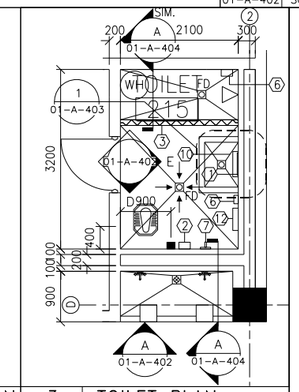

3 TOILET PLAN
01-A-402 SCALE 1:50 01-A-102

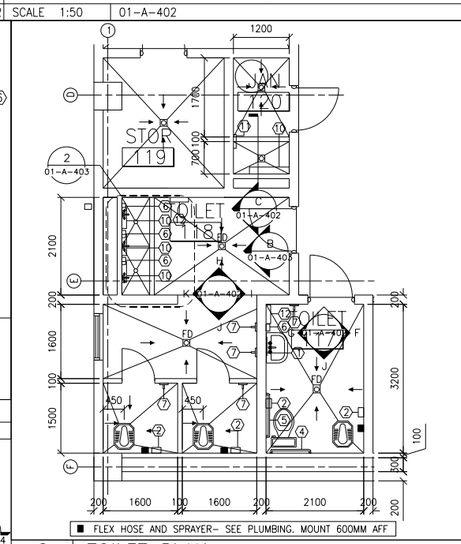

2 TOILET PLAN
01-A-402 SCALE 1:50 01-A-102

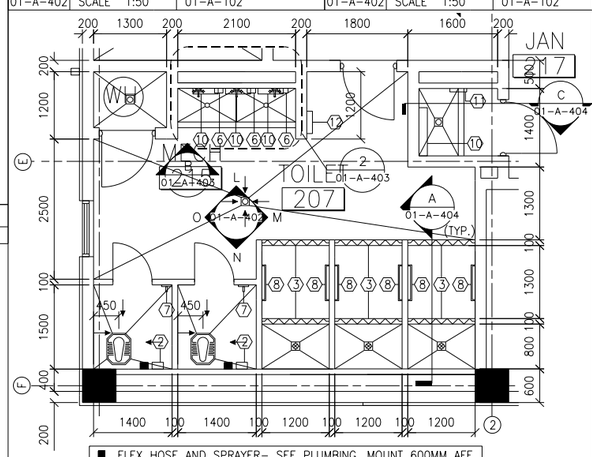

1 TOILET & SHOWER PLAN
01-A-402 SCALE 1:50 01-A-102

TOILET ACCESSORY SCHEDULE

No.	DESCRIPTION	SEE SPEC.	REMARKS
1	MIRROR–(400x600)	SEE SPEC.	
2	TOILET PAPER HOLDER	SEE SPEC.	
3	SHOWER CURTAIN & ROD	SEE SPEC.	
4	900MM GRAB BAR	SEE SPEC.	
5	1000MM GRAB BAR	SEE SPEC.	
6	SOAP HOLDER	SEE SPEC.	
7	ROBE HOOK	SEE SPEC.	
8	TOWEL BAR	SEE SPEC.	
9	OMITED	SEE SPEC.	
10	SHELF	SEE SPEC.	
11	MOP HOLDER	SEE SPEC.	
12	PAPER TOWEL DISPENSER	SEE SPEC.	

NOTES: 1– SEE SHEET A_A–601 FOR FINISH SCHEDULE
2– SEE SHEET A_A–702 FOR MOUNTING HEIGHTS

REV	DATE	BY	SUB/APP	DESCRIPTION
O	06/30/10			SITE ADAPT CONSTRUCTION PLANS

DESIGNED K. BASS
DRAWN C. SALEEBY
CHECKED K. BASS
IN CHARGE D. WHEELER
DATE 30 JUNE 2010

AFGHAN NATIONAL SECURITY FORCE
COMPREHENSIVE PLAN FOR FACILITIES DEVELOPMENT

MINISTRY OF INTERIOR (MoI) – AFGHAN NATIONAL POLICE
PROVINCIAL FIRE STATION – TYPE–B

ENLAGGEMENT TOILET PLANS & ELEVATIONS

SCALE AS SHOWN

PROJECT NO. 6151–08–0328

01–A–402

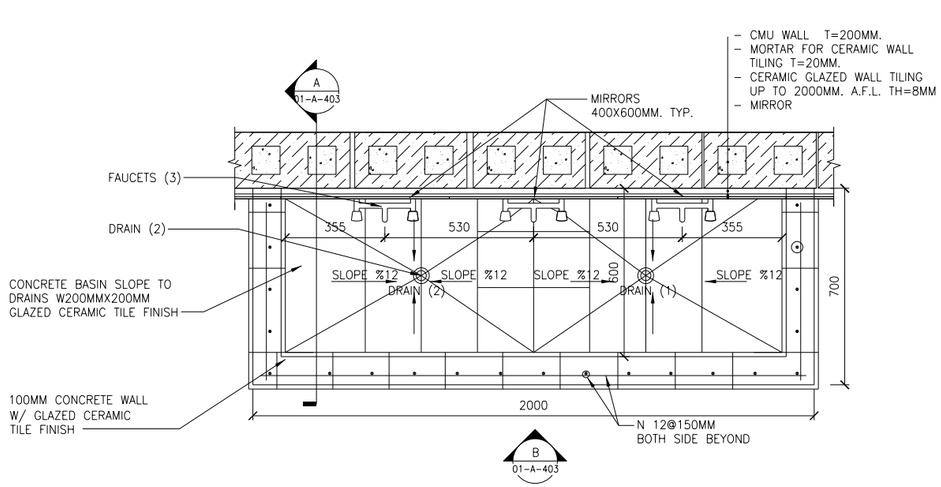

2 TYPICAL CONCRETE SINK PLAN

01-A-403 SCALE 1:10 01-A-102

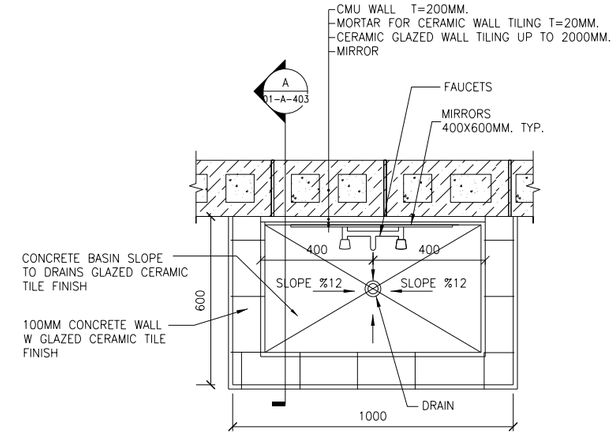

1 SINGLE CONCRETE SINK PLAN

01-A-403 SCALE 1:10 01-A-102

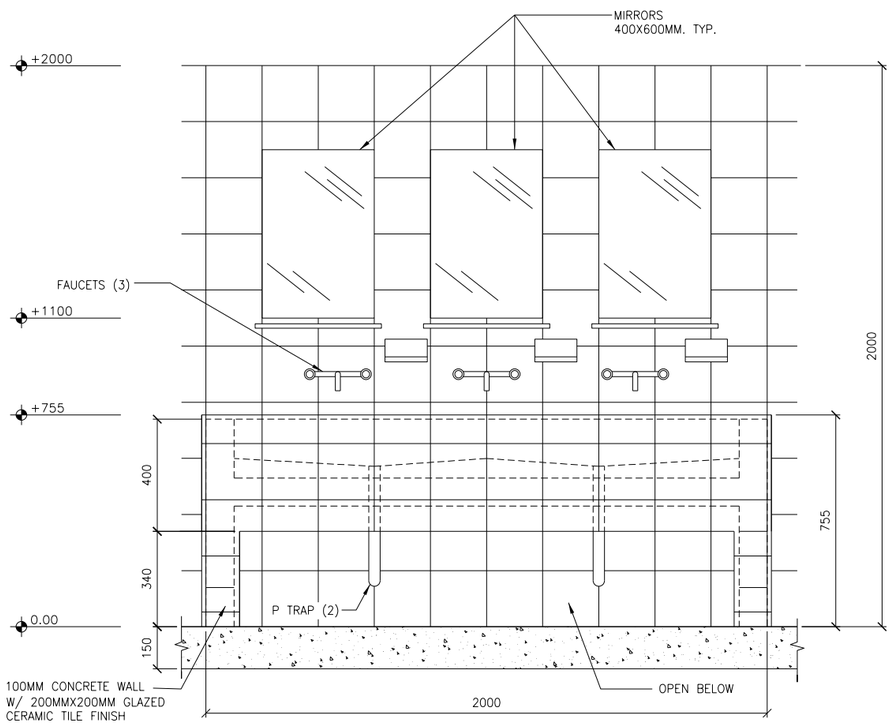

B TYPICAL CONCRETE SINK ELEVATION

01-A-403 SCALE 1:10 01-A-402

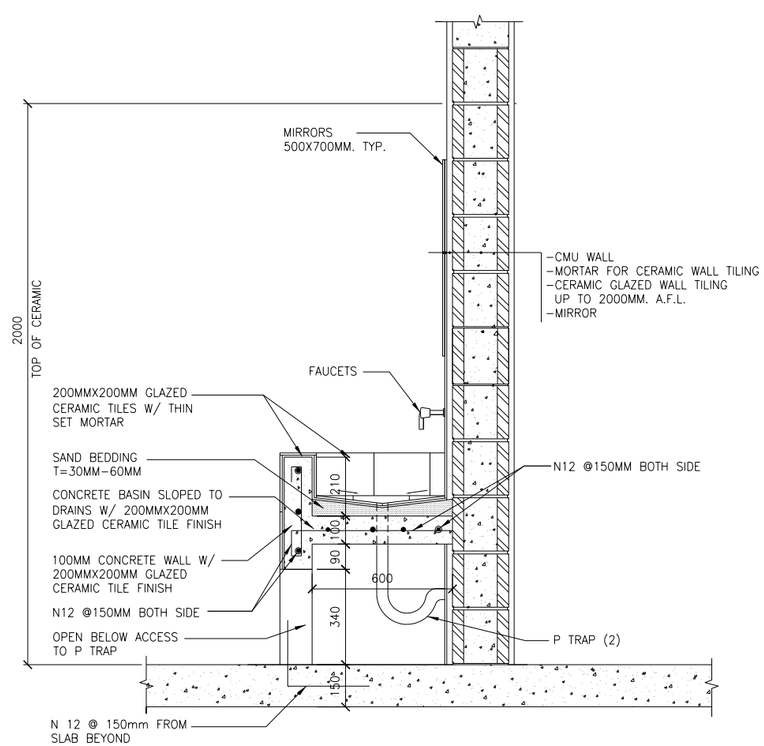

A TYPICAL CONCRETE SINK SECTION

01-A-403 SCALE 1:10 01-A-403

REV	DATE	BY	SUB'APP	DESCRIPTION
0	06/30/10			SITE ADAPT CONSTRUCTION PLANS

DESIGNED K. BASS
DRAWN C. SALEEBY
CHECKED K. BASS
IN CHARGE D. WHEELER
DATE 30 JUNE 2010

AFGHAN NATIONAL SECURITY FORCE
COMPREHENSIVE PLAN FOR FACILITIES DEVELOPMENT

MINISTRY OF INTERIOR (MoI) – AFGHAN NATIONAL POLICE
PROVINCIAL FIRE STATION – TYPE-B

DETAILS

SCALE AS SHOWN

PROJECT NO. 6151-08-0328

01-A-403

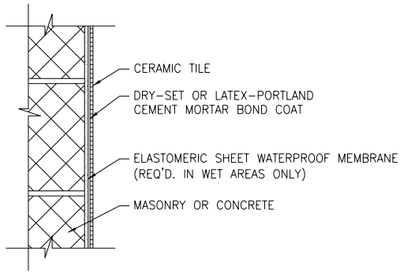

F WALL DETAIL
01-A-404 SCALE 1:5

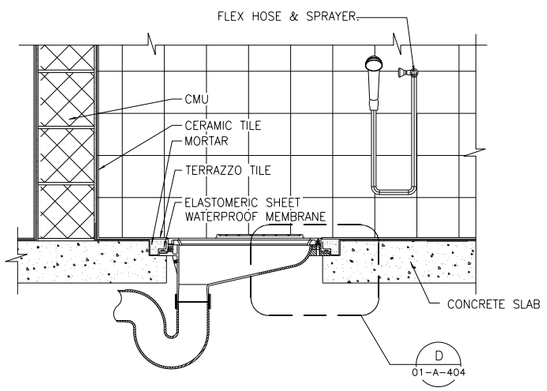

E THIN SET LATRINE
01-A-404 SCALE 1:10 01-A-102

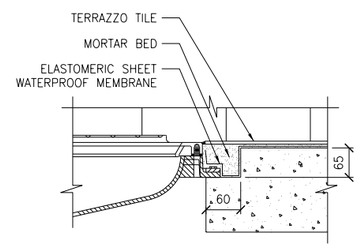

D THIN SET LATRINE DETAIL
01-A-404 SCALE 1:5 01-A-404

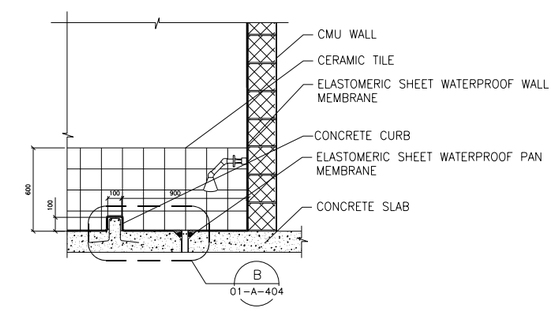

C THIN SET MOP SINK
01-A-404 SCALE 1:20 01-A-102

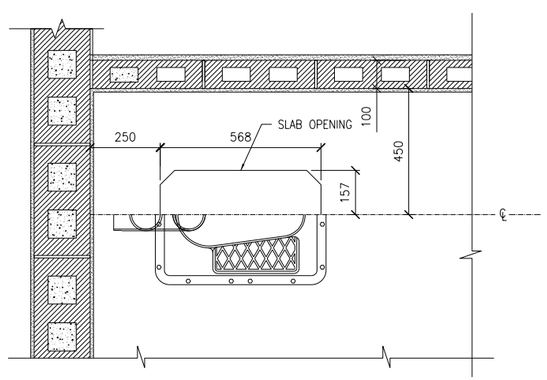

1 TOILET & SHOWER ENLARGED PLAN
01-A-404 SCALE 1:10 01-A-102

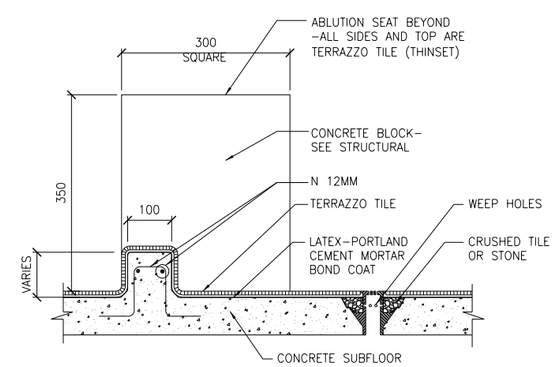

B THIN SET CURB
01-A-404 SCALE 1:5 01-A-404

NOTES:
PLUMBING CONTROL LOCATIONS NEED TO ALIGN WITH ORIENTATION OF OTHER FIXTURES. SEE PLUMBING DRAWINGS FOR CORRECT LOCATION OF CONTROLS.

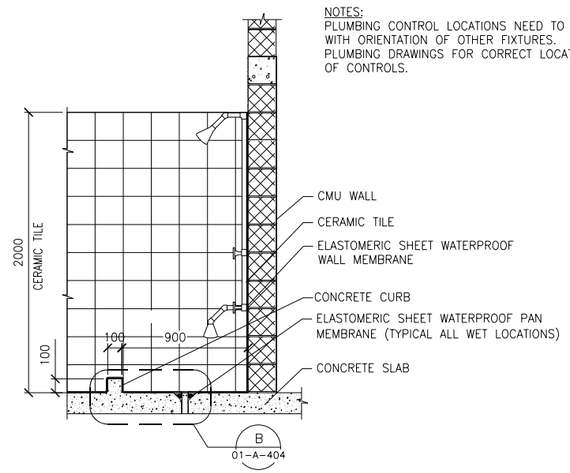

A THIN SET SHOWER
01-A-404 SCALE 1:20 01-A-102

REV	DATE	BY	SUB	APP	DESCRIPTION
0	06/30/10				SITE ADAPT CONSTRUCTION PLANS

DESIGNED
DRAWN
CHECKED
IN CHARGE D. WHEELER
DATE 30 JUNE 2010

AFGHAN NATIONAL SECURITY FORCE
COMPREHENSIVE PLAN FOR FACILITIES DEVELOPMENT
MINISTRY OF INTERIOR (MoI) – AFGHAN NATIONAL POLICE
PROVINCIAL FIRE STATION – TYPE-B
DETAILS

SCALE AS SHOWN
PROJECT NO. 6151-08-0328
01-A-404

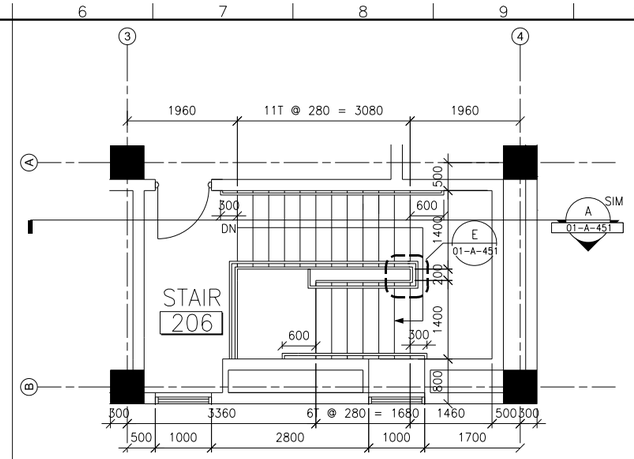

4 STAIR 208 SECOND FLOOR PLAN

01-A-451 SCALE 1:50 01-A-102

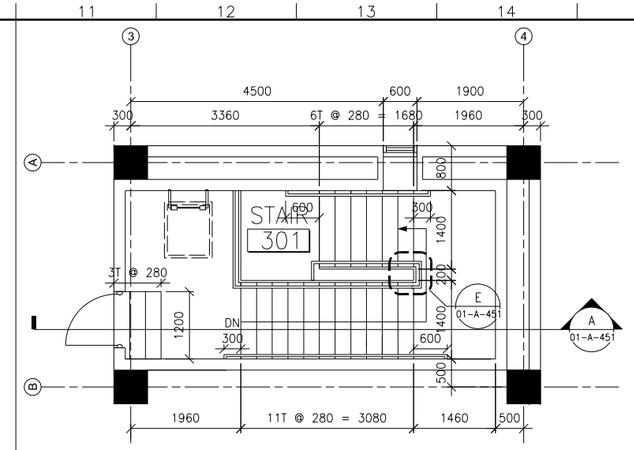

3 STAIR 301 THIRD FLOOR PLAN

01-A-451 SCALE 1:50 01-A-102

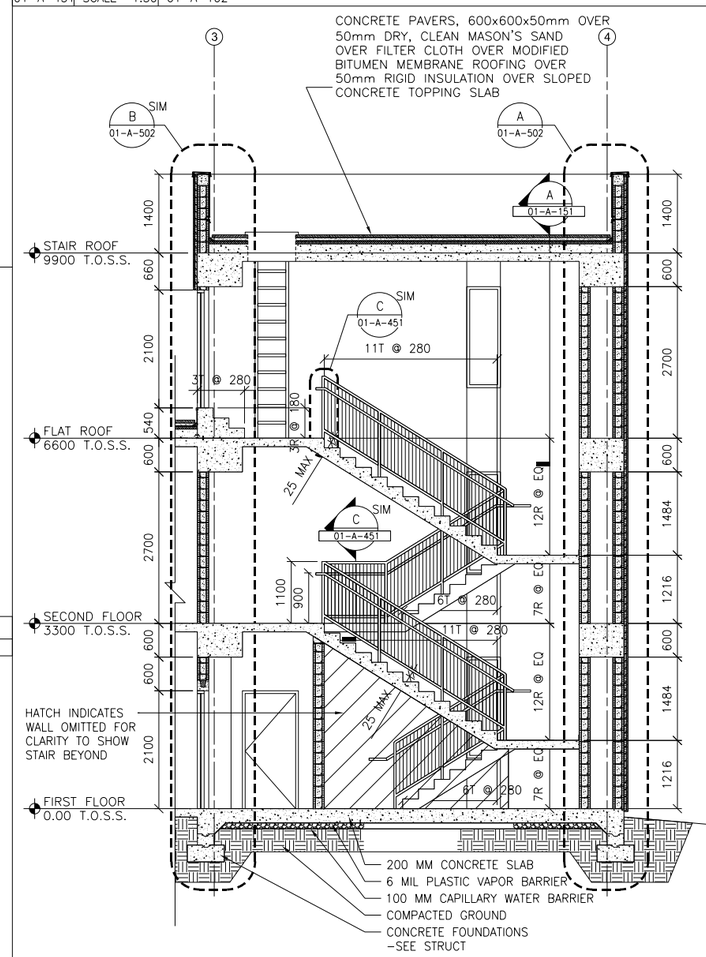

A STAIR SECTION

01-A-451 SCALE 1:50 01-A-102, 01-A-101

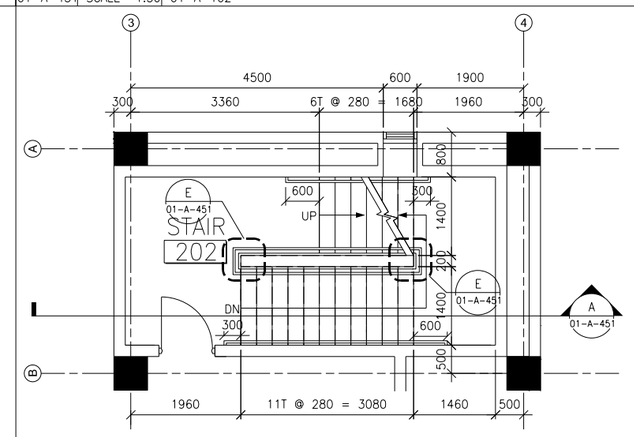

2 STAIR 202 SECOND FLOOR PLAN

01-A-451 SCALE 1:50 01-A-102

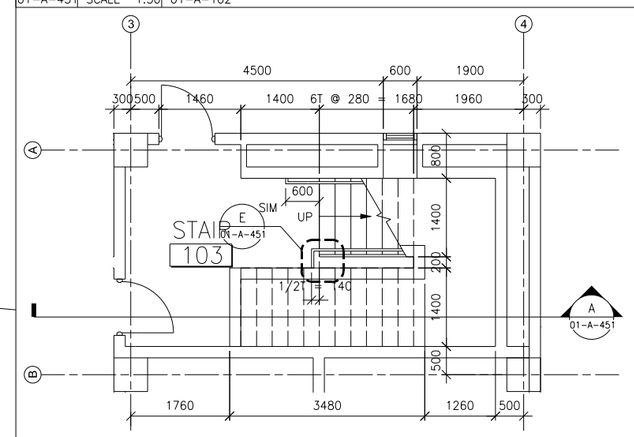

1 STAIR 103 FIRST FLOOR PLAN

01-A-451 SCALE 1:50 01-A-101

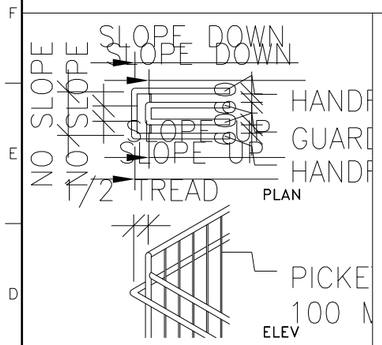

E STAIR DETAIL

01-A-451 SCALE 1:20 01-A-451

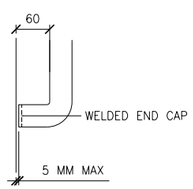

NOTE: ALL HANDRAILS ARE TO RETURN TO WALL, OR 100 MM SQ PLATE WELDED BETWEEN PICKETS, AS INDICATED ON THIS DETAIL.

D HANDRAIL RETURN

01-A-451 SCALE 1:5 01-A-451

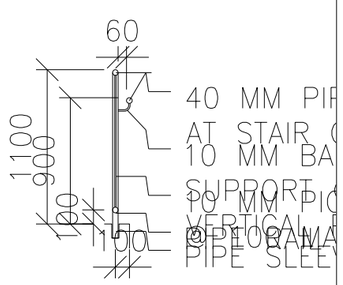

C GUARD RAIL SECTION

01-A-451 SCALE 1:20 01-A-451

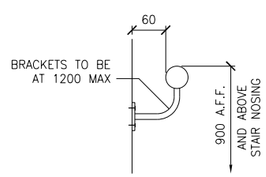

B HANDRAIL ANCHOR

01-A-451 SCALE 1:5 01-A-451

REV	DATE	BY	SUB	APP	DESCRIPTION
0	06/30/10				SITE ADAPT CONSTRUCTION PLANS

DESIGNED K. BASS
DRAWN C. SALEEBY
CHECKED K. BASS
IN CHARGE D. WHEELER
DATE 30 JUNE 2010

AFGHAN NATIONAL SECURITY FORCE COMPREHENSIVE PLAN FOR FACILITIES DEVELOPMENT

MINISTRY OF INTERIOR (MoI) – AFGHAN NATIONAL POLICE PROVINCIAL FIRE STATION – TYPE-B

STAIRS SECTION & ENLARGED PLANS

SCALE AS SHOWN

PROJECT NO. 6151-08-0328

01-A-451

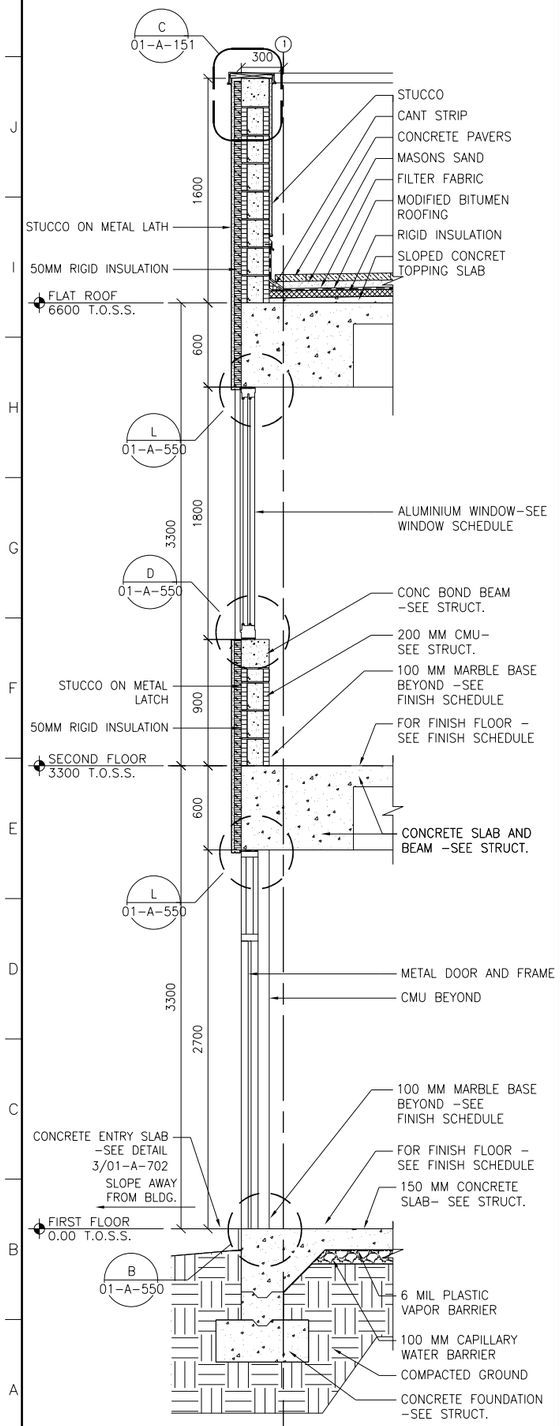

D WALL SECTION

01-A-501 SCALE 1:20 01-A-101, 01-A-102, 01-A-301

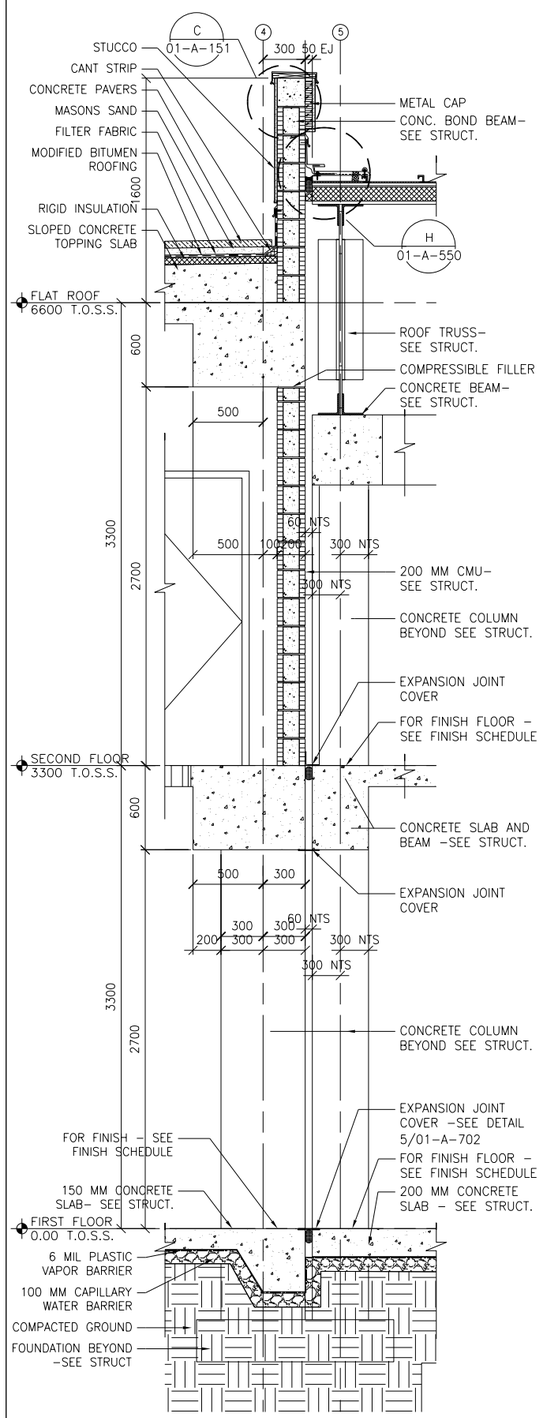

C WALL SECTION

01-A-501 SCALE 1:20 01-A-101, 01-A-102, 01-A-301

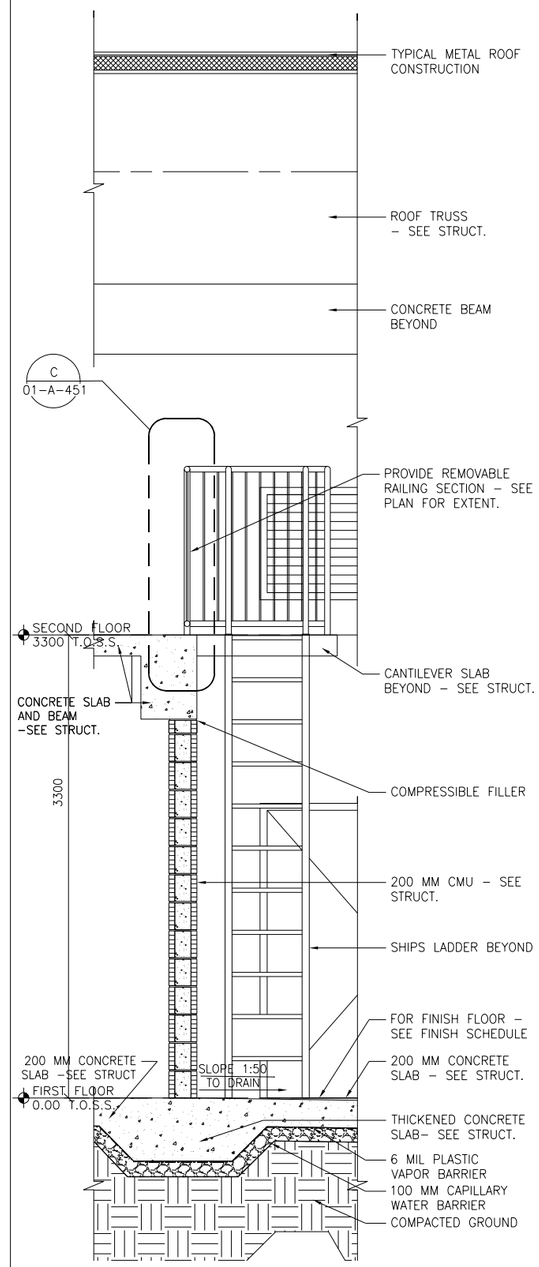

B WALL SECTION

01-A-501 SCALE 1:20 01-A-101, 01-A-102, 01-A-301

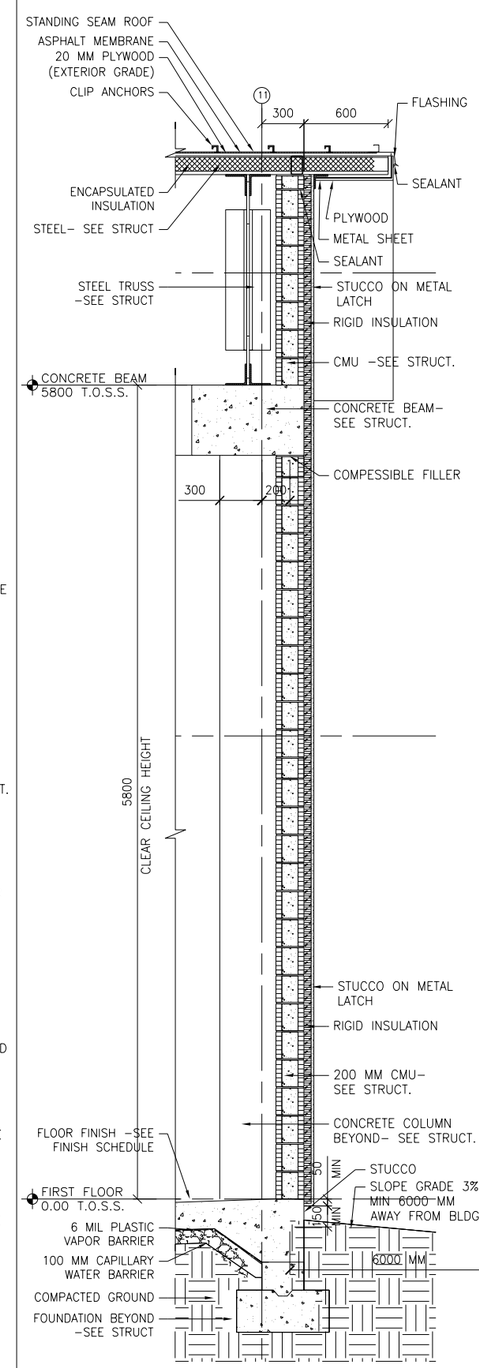

A WALL SECTION

01-A-501 SCALE 1:20 01-A-101, 01-A-102, 01-A-301

REV	DATE	BY	SUB	APP	DESCRIPTION
0	06/30/10				SITE ADAPT CONSTRUCTION PLANS

DESIGNED K. BASS
DRAWN C. SALEEBY
CHECKED K. BASS
IN CHARGE D. WHEELER
DATE 30 JUNE 2010

AFGHAN NATIONAL SECURITY FORCE COMPREHENSIVE PLAN FOR FACILITIES DEVELOPMENT

MINISTRY OF INTERIOR (MoI) - AFGHAN NATIONAL POLICE
PROVINCIAL FIRE STATION - TYPE-B

WALL SECTIONS

SCALE AS SHOWN

PROJECT NO. 6151-08-0328

01-A-501

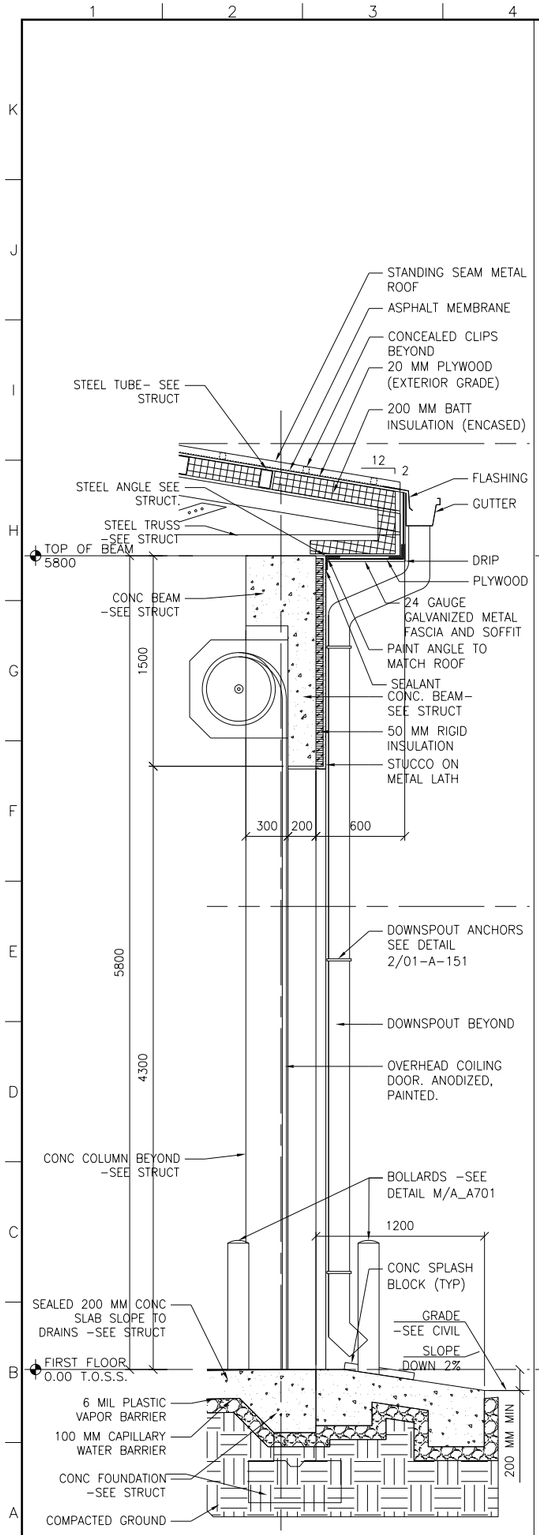

D WALL SECTION
01-A-502 SCALE 1:20 01-A-301

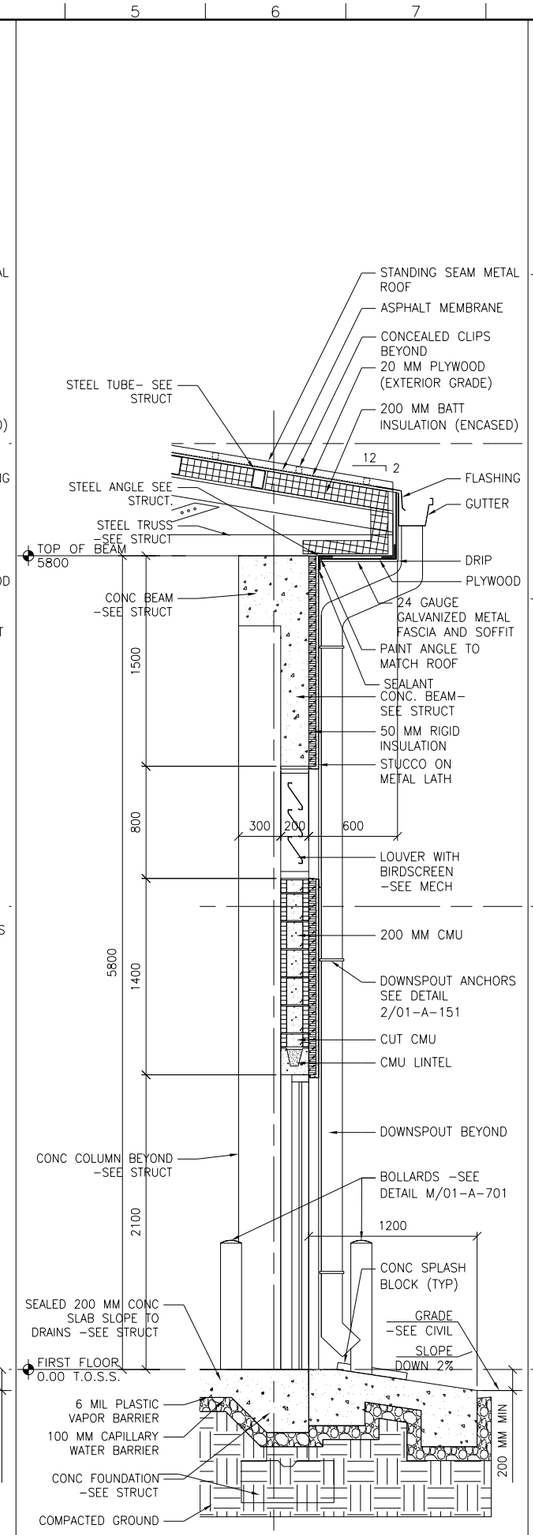

C WALL SECTION
01-A-502 SCALE 1:20 01-A-301

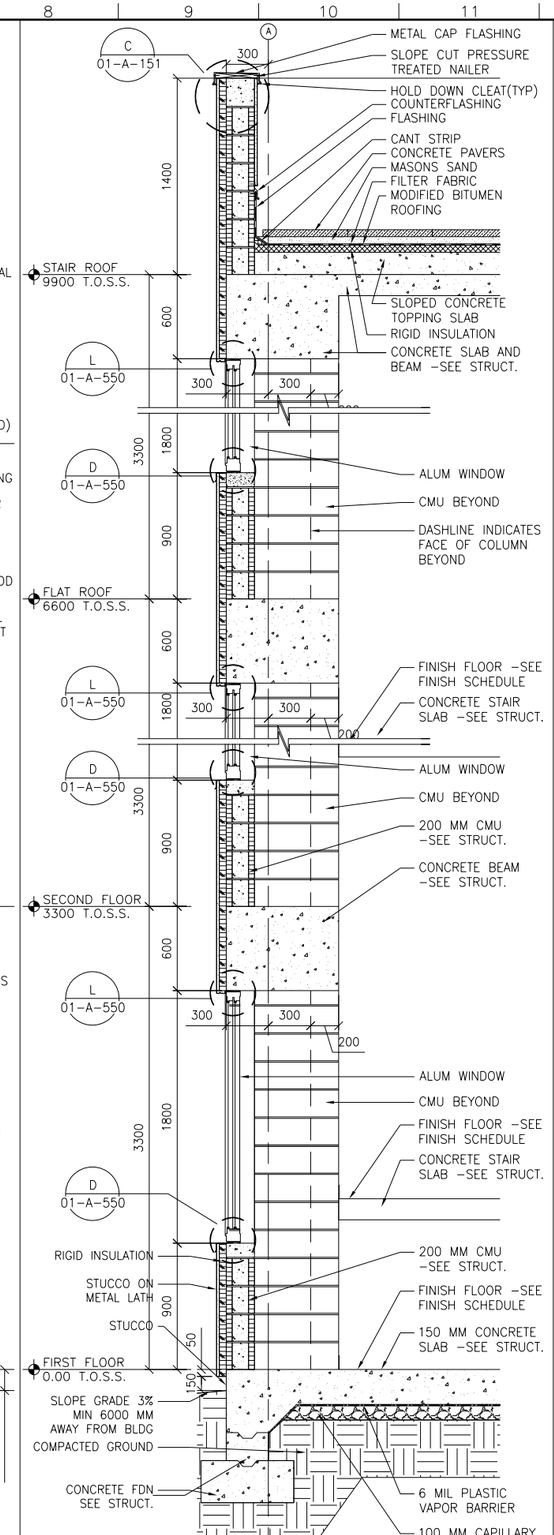

B WALL SECTION
01-A-502 SCALE 1:20 01-A-101, 01-A-102, 01-A-451

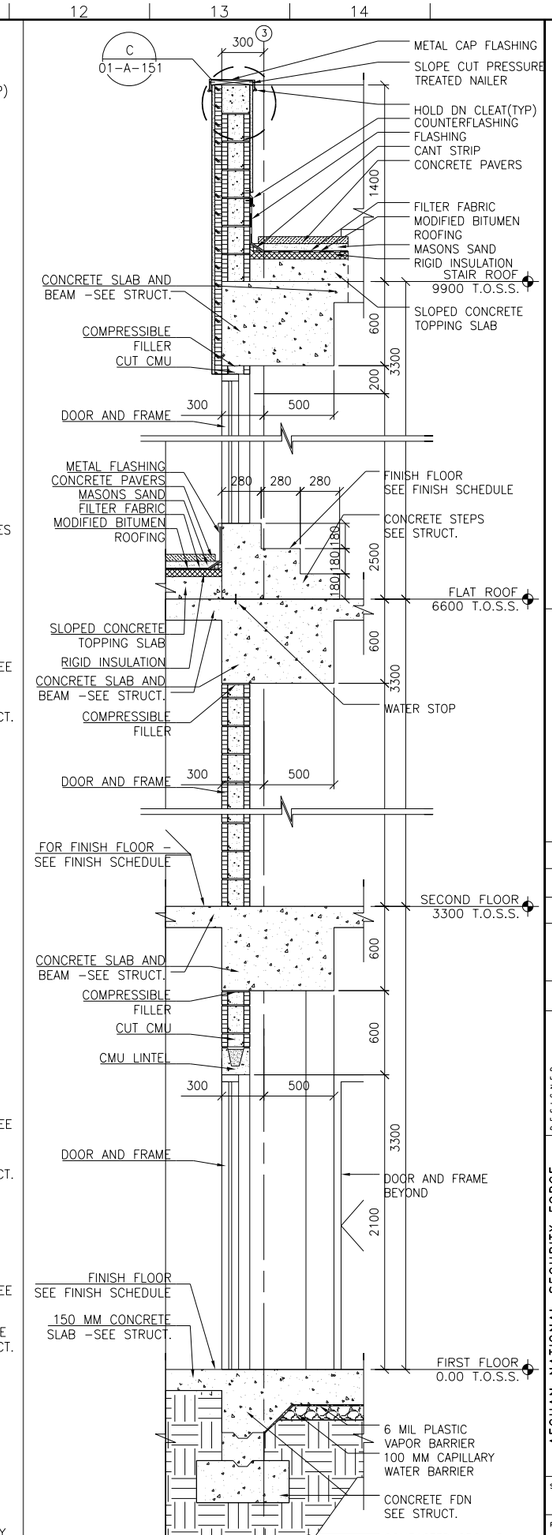

A WALL SECTION
01-A-502 SCALE 1:20 01-A-101, 01-A-102, 01-A-451

REV	DATE	BY	SUB'APP	DESCRIPTION
0	06/30/10			SITE ADAPT CONSTRUCTION PLANS

DESIGNED K. BASS
DRAWN C. SALEEBY
CHECKED K. BASS
IN CHARGE D. WHEELER
DATE 30 JUNE 2010

AFGHAN NATIONAL SECURITY FORCE COMPREHENSIVE PLAN FOR FACILITIES DEVELOPMENT

MINISTRY OF INTERIOR (MoI) – AFGHAN NATIONAL POLICE PROVINCIAL FIRE STATION – TYPE-B

WALL SECTIONS

SCALE AS SHOWN

PROJECT NO. 6151-08-0328

01-A-502

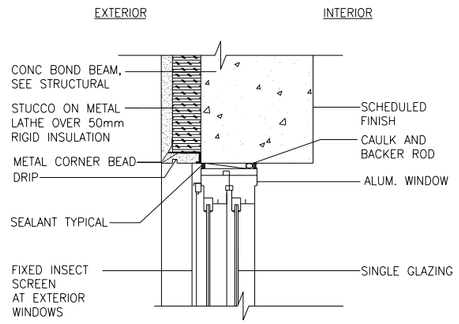

AT SIMILAR OMIT DRIP

L WINDOW HEAD DETAIL/ JAMB SIMILAR
01-A-550 SCALE 1:5 01-A-602

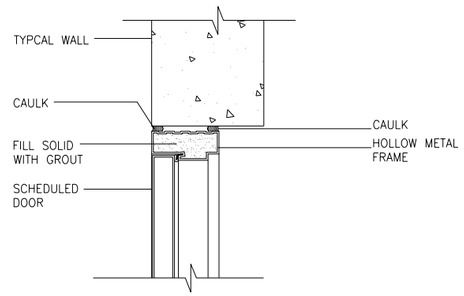

AT SIMILAR – 100MM CMU

K DOOR HEAD DETAIL
01-A-550 SCALE 1:5 01-A-602

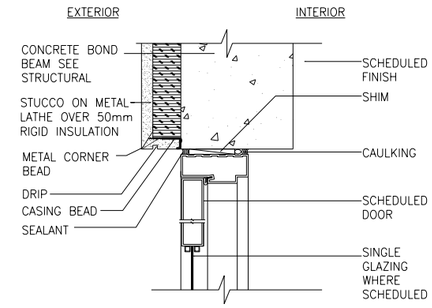

J DOOR HEAD DETAIL
01-A-550 SCALE 1:5 01-A-602

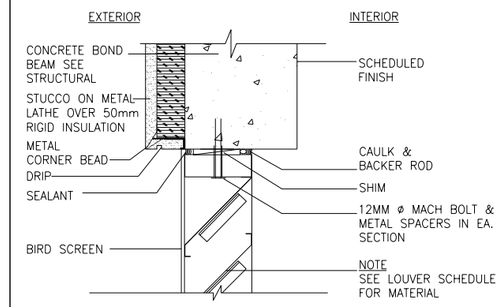

I LOUVER HEAD DETAIL
01-A-550 SCALE 1:5 01-A-602

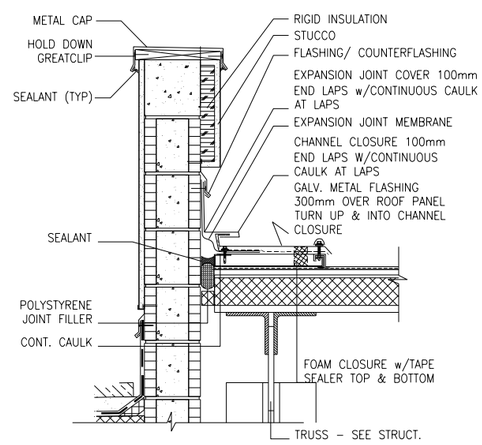

H EXPANSION JOINT DETAIL
01-A-550 SCALE 1:10 01-A-602

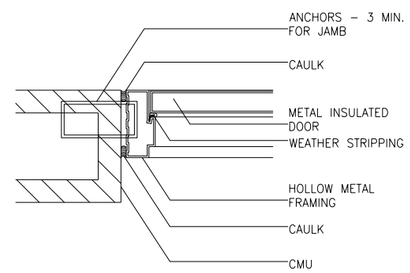

AT SIMILAR – 100MM CMU

G DOOR JAMB DETAIL
01-A-550 SCALE 1:5 01-A-602

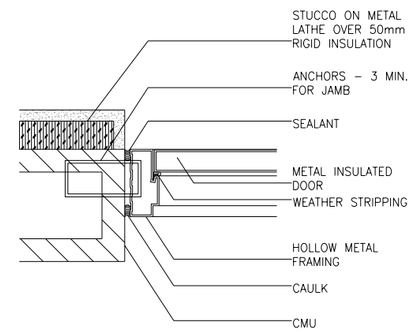

F DOOR JAMB DETAIL
01-A-550 SCALE 1:5 01-A-602

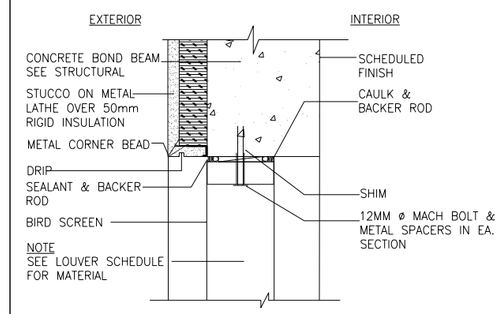

E LOUVER JAMB DETAIL
01-A-550 SCALE 1:5 01-A-602

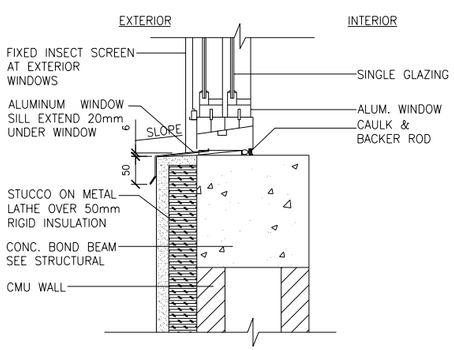

D WINDOW SILL DETAIL
01-A-550 SCALE 1:5 01-A-602

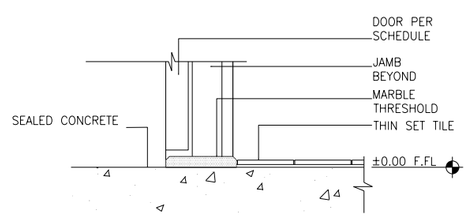

C DOOR SILL DETAIL
01-A-550 SCALE 1:5 01-A-602

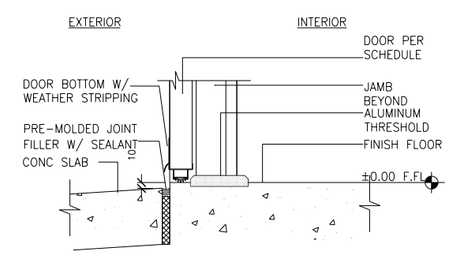

B DOOR SILL DETAIL
01-A-550 SCALE 1:5 01-A-602

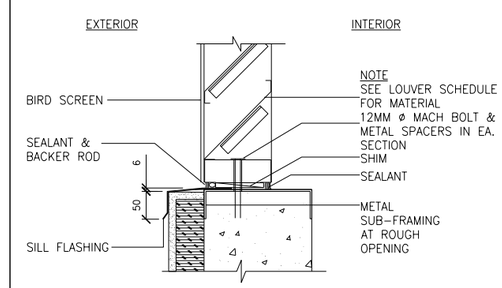

A LOUVER SILL DETAIL
01-A-550 SCALE 1:5 01-A-602

REV	DATE	BY	SUB APP	DESCRIPTION
0	06/30/10			SITE ADAPT CONSTRUCTION PLANS

DESIGNED K. BASS
DRAWN C. SALEEBY
CHECKED K. BASS
IN CHARGE D. WHEELER
DATE 30 JUNE 2010

AFGHAN NATIONAL SECURITY FORCE
COMPREHENSIVE PLAN FOR FACILITIES DEVELOPMENT
MINISTRY OF INTERIOR (MoI) – AFGHAN NATIONAL POLICE
PROVINCIAL FIRE STATION – TYPE-B

DETAILS

SCALE AS SHOWN
PROJECT NO. 6151-08-0328

01-A-550

ROOM FINISH SCHEDULE

ROOM NO.	ROOM NAME	FLOOR MATERIAL	BASE MATERIAL	WALL MATERIAL	WALL FINISH	CEILING MATERIAL	CEILING FINISH	CEILING HEIGHT	DOOR & WINDOW FINISH MATERIAL	DOOR & WINDOW FINISH FINISH	REMARKS
101	VESTIBULE	CONC/S	–	P	P–1	P	P–3	3150	MTL	P–4	
102	RECEPTION	CONC/S	–	P	P–8	P	P–3	3150	MTL	P–4	
103	STAIR	CONC/S	–	P	P–8	P	P–3	3150	MTL	P–4	
104	OFFICE	CONC/S	–	P	P–7	P	P–3	3150	MTL	P–5	
105	OFFICE	CONC/S	–	P	P–7	P	P–3	3150	MTL	P–5	
106	EQUIPMENT WASH	TT–1	MT=1	P	P–1	P	P–3	3150	–	–	
107	STORAGE	CONC/S		P	P–1	P	P–3	3150	MTL	P–5	
108	TRUCK BAY 1	CONC/S		P	P–1	EXPOSED		5800	ROLL UP	ANODIZED	
109	MAINTENANCE OFFICE	CONC/S	–	P	P–1	EXPOSED	–	5800	CHAIN LINK	–	
110	HALL	CONC/S	–	P	P–1	P	P–3	3150	MTL	–	
111	STORAGE	CONC/S	–	P	P–1	P	P–3	3150	–	–	
112	ELECTRICAL	CONC/S	–	P	P–1	P	P–3	3150	MTL	P–5	
113	OPEN OFFICE	CONC/S	–	P	P–8	P	P–3	3150	MTL	P–4	
114	STAIR	CONC/S		P	P–8	P	P–3	3150	MTL	P–4	
115	COMMUNICATION	CONC/S	–	P	P–1	P	P–3	3150	MTL	P–5	
116	STORAGE	CONC/S	–	P	P–1	P	P–3	3150	MTL	P–5	
117	TOILET	TT–1	MT–1	CT–5	P–8	P	P–6	3150	MTL	–	3, 4
118	TOILET	TT–1	MT–1	CT–5	P–8	P	P–6	3150	MTL/PVC	P–5	3, 4, 5
119	STORAGE	TT–1	MT–1	CT–5	P–8	P	P–3	3150	MTL	P–4	
120	JANITOR	TT–1	MT–1	CT–5	P–8	P	P–3	3150	MTL	–	3, 4
121	KITCHEN	TT–1	MT–1	CT–5	P–8	P	P–3	3150	MTL	P–5	
122	DFAC/TR	TT–1	MT–1	P	P–9	P	P–6	3150	MTL	P–5	
201	PRAYER	CONC/S	–	P	P–8	P	P–6	3150	MTL	P–5	
202	STAIR	CONC/S	–	P	P–8	P	P–3	3150	MTL	P–4	
203	STORAGE	CONC/S	–	P	P–1	P	P–3	3150	MTL	P–5	
204	BUNKS ROOM	CONC/S	–	P	P–9	P	P–6	3150	MTL	P–5	
205	STORAGE	CONC/S	–	P	P–1	P	P–3	3150	MTL	P–4	
206	STAIR	CONC/S		P	P–8	P	P–3	3150	MTL	P–4	
207	TOILET	TT–1	MT–1	CT–5	P–8	P	P–6	3150	PVC	–	3, 4
208	TOILET	TT–1	MT–1	CT–5	P–8	P	P–6	3150	PVC	–	3, 4
209	OFFICER	CONC/S	–	P	P–8	P	P–6	3150	MTL	P–5	
210	FITNESS	CONC/S	–	P	P–8	P	P–6	3150	MTL	P–5	
211	MWR	CONC/S	–	P	P–8	P	P–6	3150	MTL	P–5	
212	STORAGE	CONC/S	–	P	P–1	P	P–3	3150	MTL	P–4	
213	POLE 1	CONC/S	–	P	P–1	P	P–3	3150	MTL	P–5	
214	POLE 2	CONC/S	–	P	P–1	P	P–3	3150	MTL	P–5	
215	MECHANICAL	TT–1	MT–1	CT–5	P–8	P	P–3	3150	MTL	–	3, 4
216	STORAGE	CONC/S	–	P	P–1	P	P–3	3150	MTL	P–5	
217	JANITOR	TT–1	MT–1	P	P–1	P	P–3	3150	MTL	–	

FINISH SCHEDULE NOTES:

1. ALL FINISH FLOOR TRANSITIONS ARE TO OCCUR UNDER DOOR U.N.O.
2. PROVIDE PLYWOOD BACKBOARD AS REQUIRED FOR ALL EQUIPMENT.
3. CERAMIC TILE APPLIED TO WALL FROM FLOOR TO 2000 AFF.
4. PAINT APPLIED TO WALL FROM 2000 AFF. TO CEILING.
5. PVC DOOR IS PREFINISHED– SEE SPECIFICATIONS. DO NOT PAINT.
6. RECESS CONCRETE SLAB TO RECEIVE TILE AND TO ALLOW FLOOR SLOPE – SEE STRUCT.
7. ALL EXTERIOR SURFACES TO RECEIVE PAINT SHALL BE PAINTED P–2 U.N.O.
8. ALL RAILINGS TO RECEIVE PAINT P–4.

GENERAL FINISH NOTES/TYPICAL COLORS & MATERIAL SELECTION

WALL FINISHES

PAINT/EPOXY PAINT (P/EP):
- P–1 BRIGHTO PAINTS; # 42 SAND STONE SUPER EMULSION
- P–2 BRIGHTO PAINTS; # 127 CAMEO FOR EXTERNAL USE WEATHER SHIELD
- P–3 BRIGHTO PAINTS; # X LATEX FOR WATER BASE WALL
- P–4 BRIGHTO METALLIC ENAMEL; # 3 LIGHT GRAY SUITABLE FOR USE ON ALL TYPES OF INTERIOR AND EXTERIOR WOOD AND METAL SURFACES.
- P–5 BRIGHTO METALLIC ENAMEL; # 42 ASH WHITE SUITABLE FOR USE ON ALL TYPES OF INTERIOR AND EXTERIOR WOOD AND METAL SURFACES.
- P–6 BRIGHTO PAINTS; # 12 OFF WHITE
- P–7 BRIGHTO PAINTS; #70 ROSE WHITE
- P–8 BRIGHTO PAINTS; #69 LILY WHITE
- P–9 BRIGHTO PAINTS; #40 PEACH CREAM

CERAMIC TILE (CT):
- CT–4 R.A.K CERAMIC UAE;#4/700RBEM–10 200mm X 200mm UNPOLISHED PORCELAIN
- CT–5 R.A.K CERAMIC UAE; # 600CPAR–2 200mm X 300mm UNPOLISHED PORCELAIN

FLOORING

CONC/S CONCRETE SEALED AND HARDENED WITH BROOM FINISH

TERRAZZO TILE (TT)
- TT–1 AFGHAN LOCAL PRODUCT; 300mm X 300mm WITH SPECIAL POLISH

CERAMIC TILE (CT)
- CT–1 R.A.K CERAMIC UAE; 300mm X 300mm UNPOLISHED PORCELAIN
- CT–2 AFGHAN LOCAL PRODUCT; 300mm X 600mm POLISHED PORCELAIN
- CT–3 AFGHAN LOCAL PRODUCT; 600mm X 1000mm UNPOLISHED PORCELAIN
- CT–4 R.A.K CERAMIC UAE;#4/700RBEM–10 200mm X 200mm UNPOLISHED PORCELAIN
- CT–5 R.A.K CERAMIC UAE;# 600CPAR–2 200mm X 300mm UNPOLISHED PORCELAIN

BASE TREATMENTS

MARBLE TILE (MT)
- MT–1 AFGHAN LOCAL PRODUCT; 75mm X 100mm CROSS SHEEN PORCELAIN MARBLE TILE COVE BASE; #AXXX EMPRESS BLACK

CEILING FINISHES

PAINTED CEILINGS (P)
- P–1 BRIGHTO PAINT; # 12 OFF WHITE

MISCELLANEOUS SURFACES

TOILET PARTITIONS (TP)
100mm CMU

SIGNAGE (S)
- S–1 BACKGROUND COLOR: MATCH P–3, TEXT: WHITE

INTERIOR DOOR AND WINDOW FRAMES
- P–4 BRIGHTO ; #3 LIGHT GRAY

FINISH SCHEDULE ABBREVIATIONS

AFF	ABOVE FINISHED FLOOR	LAM	PLASTIC LAMINATE
ALSF	ALUMINUM STOREFRONT SYSTEM	MANUF	BY MANUFACTURER
		MAT	ENTRY MAT
ATC	ACOUSTIC TILE CEILING	MR	MOISTURE RESISTANT
CB	CEMENT BOARD	MTL	METAL PANEL
CONC/S	CONCRETE SEALED AND HARDENED WITH BROOM FINISH	MW	MOVABLE WALL
		NA	NOT APPLICABLE
		P	PAINT
CPT	CARPET	PREFIN	PREFINISHED
CT	CERAMIC TILE	RB	RESILIENT BASE
EP	EPOXY PAINT	UNO	UNLESS NOTED OTHERWISE
EXPOSED	EXPOSED STRUCTURE	VCT	VINYL COMPOSITION TILE
GN	GENERAL NOTE	MT	MARBLE TILE
GWB	GYPSUM WALL BOARD	MTD	METALLIC DOOR
HM	HOLLOW METAL	WD	WOOD DOOR
		TT	TERRAZZO TILE

GENERAL NOTES

1. THE MANUFACTURER'S NAMES AND THEIR PRODUCTS REFERENCED ONLY INDICATE THE COLOR, TEXTURE, AND PATTERN REQUIRED FOR THE MATERIALS LISTED. THE PRODUCTS FURNISHED SHALL MEET THE COLOR, TEXTURE, AND PATTERN INDICATED AS WELL AS THE MATERIAL QUALITY AND PERFORMANCE SPECIFIED IN THE APPLICABLE TECHNICAL SPECIFICATIONS. THE USE OF MANUFACTURER'S NAMES AND PRODUCTS DO NOT PRECLUDE THE USE OF OTHER MANUFACTURER'S PRODUCTS OF APPROVED EQUAL COLOR, TEXTURE, AND/OR PATTERN IF ALL OTHER REQUIREMENTS ARE MET.
2. ALL VISIBLE GRILLES, DIFFUSERS, AND OTHER MECHANICAL RELATED FINISH OPENING DEVICES INCLUDING FIRE ALARMS SHALL BE PAINTED TO MATCH COLOR OF ADJACENT SURFACE.
3. REFER TO APPLICABLE ARCHITECTURAL DRAWINGS AND DETAILS TO PROPERLY ASSESS THE FULL EXTENT OF WORK REQUIRED. SPECIFICALLY REFER TO THE REFLECTED CEILING PLANS AND BUILDING SECTIONS TO DETERMINE HEIGHTS OF REQUIRED WALL MATERIALS, SPECIAL CONDITIONS AND STRUCTURES, ETC.
4. REFER TO EXTERIOR ELEVATIONS FOR EXTERIOR FINISH SELECTIONS.
5. INFILL FLOOR AT SLAB RECESSES NOT TO RECEIVE CERAMIC TILE WITH CONCRETE LEVEL WITH ADJACENT FLOOR SURFACES PRIOR TO APPLYING FLOOR FINISH.
6. WALL AND CEILING SURFACES SHALL BE PAINTED WITH FLAT FINISH, TRIM SHALL BE SEMI–GLOSS.
7. INTERIOR SURFACE OF EXTERIOR METAL DOORS AND FRAMES SHALL BE P–4.

REV	DATE	BY	SUB	APP	DESCRIPTION
0	06/30/10				SITE ADAPT CONSTRUCTION PLANS

DESIGNED K. BASS
DRAWN C. SALEEBY
CHECKED K. BASS
IN CHARGE D. WHEELER
DATE 30 JUNE 2010

AFGHAN NATIONAL SECURITY FORCE COMPREHENSIVE PLAN FOR FACILITIES DEVELOPMENT

MINISTRY OF INTERIOR (MoI) – AFGHAN NATIONAL POLICE PROVINCIAL FIRE STATION – TYPE–B

ROOM FINISH SCHEDULE

SCALE AS SHOWN

PROJECT NO. 6151–08–0328

01–A–601

DOOR NO.	DOOR TYPE	DOOR MATL.	DOOR WIDTH	DOOR HEIGHT	DOOR THK.	FRAME TYPE	FRAME MATL.	FRAME HEAD	FRAME JAMB	FRAME SILL	RATING	CLOSER	HDWR GROUP	HDWR FUNCTION	REMARKS
101	D	ALUM	900	2100	45	6	ALUM	J	F	B	–	YES	HD1	F08	1
102A	D	MTL	900	2100	45	1	H.M.	K	G	–	–	YES	HD1	F08	
104	A	MTL	900	2100	45	1	H.M.	K	G	–	–	–	HD2	F021	
105	A	MTL	900	2100	45	1	H.M.	K	G	–	–	–	HD2	F021	
120	C	MTL	900	2100	45	1	H.M.	K	G	C	–	–	HD2	F07	
117	C	MTL	900	2100	45	1	H.M.	K	G	C	–	–	HD4	F019	
118A	C	MTL	900	2100	45	1	H.M.	K	G	C	–	YES	HD2	F01	
118B	E	PVC	700	1800	45	2	H.M.	K SIM	G SIM	–	–	–	HD4	F019	2
118C	E	PVC	700	1800	45	2	H.M.	K SIM	G SIM	–	–	–	HD4	F019	2
103	A	MTL	900	2100	45	1	H.M.	J	F	B	–	YES	HD1	F031	1
112	A	MTL	PR-900	2100	45	3	H.M.	K	G	–	C-45MIN	YES	HD2	F07	
115	A	MTL	900	2100	45	1	H.M.	K	G	–	–	–	HD2	F021	
114A	A	MTL	900	2100	45	1	H.M.	J	F	B	–	YES	HD1	F031	1
121A	B	ALUM	900	2100	45	4	ALUM	J	F	B	–	YES	HD1	F08	1
119	A	MTL	900	2100	45	1	H.M.	K	G	–	C-45MIN	YES	HD2	F021	
122	D	MTL	900	2100	45	1	H.M.	K	G	C	B-90MIN	YES	HD2	F05	
110A	B	MTL	900	2100	45	1	H.M.	K	G	–	C-45MIN	YES	HD1	F01	1, 5
107	B	MTL	900	2100	45	1	H.M.	K	G	–	C-45MIN	YES	HD2	F021	
111	B	MTL	900	2100	45	1	H.M.	K	G	–	C-45MIN	YES	HD2	F021	
108A	A	MTL	900	2100	45	1	H.M.	J	F	B	–	YES	HD1	F04	1
108G	A	MTL	900	2100	45	1	H.M.	J	F	B	–	YES	HD1	F04	1
108H	A	MTL	900	2100	45	1	H.M.	J	F	B	–	YES	HD1	F04	1
108L	A	MTL	900	2100	45	1	H.M.	J	F	B	–	YES	HD1	F04	1
108B	F	ALUM	4300	4300	–	–	–	L/01-A-701	H/01-A-701	–	–	–	HD5	–	3
108C	F	ALUM	4300	4300	–	–	–	L/01-A-701	H/01-A-701	–	–	–	HD5	–	3
108D	F	ALUM	4300	4300	–	–	–	L/01-A-701	H/01-A-701	–	–	–	HD5	–	3
108E	F	ALUM	4300	4300	–	–	–	L/01-A-701	H/01-A-701	–	–	–	HD5	–	3
108F	F	ALUM	4300	4300	–	–	–	L/01-A-701	H/01-A-701	–	–	–	HD5	–	3
108J	F	ALUM	4300	4300	–	–	–	L/01-A-701	H/01-A-701	–	–	–	HD5	–	3
108K	F	ALUM	4300	4300	–	–	–	L/01-A-701	H/01-A-701	–	–	–	HD5	–	3
108L	F	ALUM	4300	4300	–	–	–	L/01-A-701	H/01-A-701	–	–	–	HD5	–	3
108M	F	ALUM	4300	4300	–	–	–	L/01-A-701	H/01-A-701	–	–	–	HD5	–	3
108N	F	ALUM	4300	4300	–	–	–	L/01-A-701	H/01-A-701	–	–	–	HD5	–	3
116	A	MTL	900	2100	45	1	H.M.	K	G	C	–	–	HD2	F07	
121B	B	MTL	900	2100	45	1	H.M.	K	G	–	B-90MIN	YES	HD2	F021	
114B	B	MTL	900	2100	45	1	H.M.	K	G	–	B-60MIN	YES	HD1	F01	
110B	B	MTL	900	2100	45	1	H.M.	K	G	–	B-90MIN	YES	HD1	F01	
102B	B	MTL	900	2100	45	1	H.M.	K	G	–	B-60MIN	YES	HD1	F01	
109A	G	CHN	900	2100	45	–	–	–	–	–	–	–	HD5	F07	4
109B	G	CHN	900	2100	45	–	–	–	–	–	–	–	HD5	F07	4
121C	A/01-A-701	MTL	1400	1760	–			C/01-A-701	C/01-A-701 SIM	B/01-A-701	B-90MIN			–	

7 DOOR SCHEDULE

01-A-602 SCALE NTS 01-A-101, 01-A-102

DOOR NO.	DOOR TYPE	DOOR MATL.	DOOR WIDTH	DOOR HEIGHT	DOOR THK.	FRAME TYPE	FRAME MATL.	FRAME HEAD	FRAME JAMB	FRAME SILL	RATING	CLOSER	HDWR GROUP	HDWR FUNCTION	REMARKS
207A	A	MTL	900	2100	45	1	H.M.	K	G	C	–	YES	HD2	F01	
207B	E	PVC	700	1800	45	2	H.M.	K SIM	G SIM	–	–	–	HD4	F19	2
207C	E	PVC	700	1800	45	2	H.M.	K SIM	G SIM	–	–	–	HD4	F19	2
202	B	MTL	900	2100	45	1	H.M.	K	G	–	B-60MIN	YES	HD1	F13	
217	C	MTL	900	2100	45	1	H.M.	K	G	C	–	–	HD2	F07	
201	A	MTL	900	2100	45	1	H.M.	K	G	–	–	–	HD2	F01	
209	A	MTL	900	2100	45	1	H.M.	K	G	–	–	–	HD2	F13	
208	C	MTL	900	2100	45	1	H.M.	K	G	C	–	–	HD4	F19	
210	D	MTL	900	2100	45	1	H.M.	K	G	–	C-45MIN	YES	HD2	F01	
211A	D	MTL	900	2100	45	1	H.M.	K	G	–	C-45MIN	YES	HD2	F01	
211B	D	MTL	900	2100	45	4	H.M.	J	F	B	–	YES	HD2	F08	1
211C	D	MTL	900	2100	45	4	H.M.	J	F	B	–	YES	HD2	F08	1
213	A	MTL	900	2100	45	1	H.M.	K	G	–	B-90MIN	YES	HD1	F08	5
214	A	MTL	900	2100	45	1	H.M.	K	G	–	B-90MIN	YES	HD1	F08	5
206	B	MTL	900	2100	45	1	H.M.	K	G	–	B-60MIN	YES	HD1	F13	
203	A	MTL	900	2100	45	1	H.M.	K	G	–	C-45MIN	YES	HD2	F07	
205	A	MTL	900	2100	45	1	H.M.	K	G	–	C-45MIN	YES	HD2	F07	
216	A	MTL	900	2100	45	1	H.M.	K	G	–	C-45MIN	YES	HD2	F07	
215	C	MTL	900	2100	45	1	H.M.	K	G	–	–	–	HD2	F07	
301	A	MTL	900	2100	45	1	H.M.	J	F	C	B-60MIN	YES	HD2	F01	1

8 DOOR SCHEDULE

01-A-602 SCALE NTS 01-A-101, 01-A-102

WINDOW NO.	FRAME TYPE	FRAME MATL.	FRAME WIDTH	FRAME HEIGHT	OPENING SYSTEM	REMARKS
W1	C	ALUM	600	1800	FIXED	2
W2	A	ALUM	1000	1800	CASEMENT/LOCKABLE	1, 2
W3	A	ALUM	1000	1800	CASEMENT/LOCKABLE	1, 2
W4	A	ALUM	1000	1800	CASEMENT/LOCKABLE	1, 2
W5	A	ALUM	1000	1800	CASEMENT/LOCKABLE	1, 2
W6	D	ALUM	2400	1800	CASEMENT/LOCKABLE	1, 2
W7	A	ALUM	1000	1800	CASEMENT/LOCKABLE	1, 2
W8	A	ALUM	1000	1800	CASEMENT/LOCKABLE	1, 2
W9	D	ALUM	2400	1800	CASEMENT/LOCKABLE	1, 2
W10	A	ALUM	1000	1800	CASEMENT/LOCKABLE	1, 2
W12	B	ALUM	1000	1800	FIXED	2
W13	D	ALUM	2400	1800	CASEMENT/LOCKABLE	1, 2
W14	D	ALUM	2400	1800	CASEMENT/LOCKABLE	1, 2
W12	C	ALUM	600	1800	FIXED	
W15	A	ALUM	1000	1800	CASEMENT/LOCKABLE	1, 2
W16	A	ALUM	1000	1800	CASEMENT/LOCKABLE	1, 2
W17	D	ALUM	2400	1800	CASEMENT/LOCKABLE	1, 2
W20	A	ALUM	1000	1800	CASEMENT/LOCKABLE	1, 2
W18	D	ALUM	2400	1800	CASEMENT/LOCKABLE	1, 2
W21	A	ALUM	1000	1800	CASEMENT/LOCKABLE	1, 2
W22	A	ALUM	1000	1800	CASEMENT/LOCKABLE	1, 2
W19	D	ALUM	2400	1800	CASEMENT/LOCKABLE	1, 2
W23	A	ALUM	1000	1800	CASEMENT/LOCKABLE	1, 2
W24	C	ALUM	600	1800	FIXED	2

ABBREVIATIONS:

H.M.	HOLLOW METAL
CHN	CHAINLINK
ALUM	ALUMINUM
MTL	METAL

GLAZING SCHEDULE

1. 6MM FLOAT GLASS, UNTINTED
2. 6MM TEMPERED GLASS, UNTINTED
3. FIRE RATED GLAZING
4. 6MM FLOAT GLASS, OPAQUE

6 WINDOW SCHEDULE

01-A-602 SCALE NTS 01-A-101, 01-A-102

5 GLAZING SCHEDULE

01-A-602 SCALE NTS 01-A-101, 01-A-102

DOOR SCHEDULE REMARKS

1. EXTERIOR DOOR W/ WEATHER STRIPPING
2. PVC DOOR W/ UNDERCUT FOR VENTILATION
3. ROLL UP DOOR W/ COILING
4. CHAIN LINK DOOR W/ LATCH
5. PROVIDE ROUGH TEXTURE LEVER @ LOCKSET TO WARN HAZARD
6. PROVIDE RAISED THRESHOLD @ ALL DOORS RECEIVING WEATHERSTRIPPING
7. ALL HEAD, JAMB AND SILL DETAILS ARE ON SHEET 01-A-550 U.N.O.
8. ALL DOOR FRAMES ARE 200MM FROM ADJACENT WALL U.N.O.
9. FILL ALL H.M. FRAMES SOLID WITH GROUT
10. ALL GLASS STOPS IN RATED DOORS TO BE METAL
11. ALL FINISH FLOOR TRANSITIONS ARE TO OCCUR AT DOOR CENTERLINE U.N.O.

HDWR NO.	HARDWARE DESCRIPTION
HD1	HINGES, MORTISE LOCKSET (SERIES 1000), CLOSER, LATCH, DOOR STOPS, DOOR BOLTS, HANDLES, PANIC DEVICE, KICK PLATE, (THRESHHOLD W/ WEATHER STRIPPING FOR EXTERIOR DOORS)
HD2	HINGES, MORTISE LOCKSET (SERIES 1000), CLOSER, LATCH, DOOR STOPS, DOOR BOLTS, HANDLES, KICK PLATE, (THRESHHOLD W/ WEATHER STRIPPING FOR EXTERIOR DOORS)
HD3	HINGES, MORTISE LOCKSET (SERIES 1000), CLOSER, LATCH, DOOR STOPS, DOOR BOLTS, HANDLES, (THRESHHOLD W/ WEATHER STRIPPING FOR EXTERIOR DOORS)
HD4	HINGES, MORTISE LOCKSET (SERIES 1000) (PRIVACY FUNCTION), HANDLE
HD5	MANUFACTURE RECOMMENDED WITH ALL HARDWARE REQUIREMENTS
NOTE:	HARDWARE GROUPS AND FUNCTIONS HAVE BEEN DETERMINED WITHOUT INPUT FROM USER- ALL TO REVIEW WITH SUPPLIER BEFORE ORDERING

WINDOW SCHEDULE REMARKS

1. FIXED INSECT SCREEN OVER OPERABLE WINDOWS
2. HEAD DETAIL IS L/01-A-550, JAMB DETAIL IS L SIM/01-A-550 AND SILL IS D/01-A-550

LOUVER SCHEDULE REMARKS

1. WEATHER RESISTANT METAL LOUVER W/ BIRD SCREEN
2. HEAD DETAIL IS I/01-A-550, JAMB DETAIL IS E/01-A-550 AND SILL DETAIL IS A/01-A-550

LOUVER NO.	FRAME TYPE	FRAME MATL.	FRAME WIDTH	FRAME HEIGHT	REMARKS
L1	G	ALUM	1000	800	1, 2
L2	G	ALUM	1000	800	1, 2
L3	G	ALUM	1000	800	1, 2
L4	G	ALUM	1000	800	1, 2

3 LOUVER SCHEDULE

01-A-602 SCALE NTS 01-A-101, 01-A-102

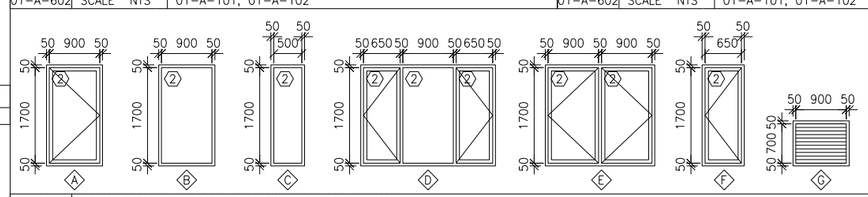

4 WINDOE AND LOUVER TYPES

01-A-602 SCALE 1:50 01-A-101, 01-A-102

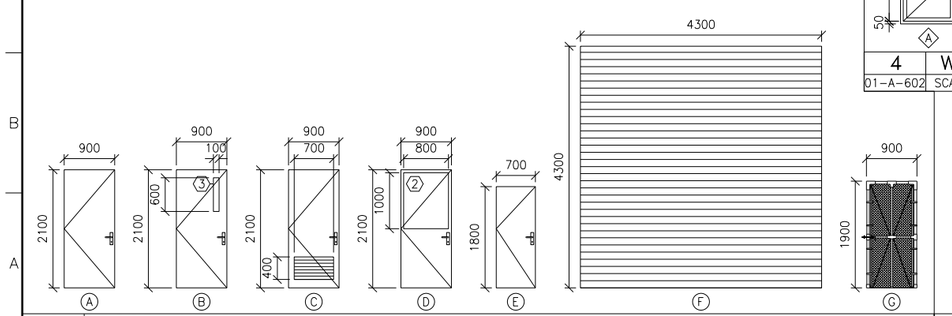

2 DOOR TYPES

01-A-602 SCALE 1:50 01-A-101, 01-A-102

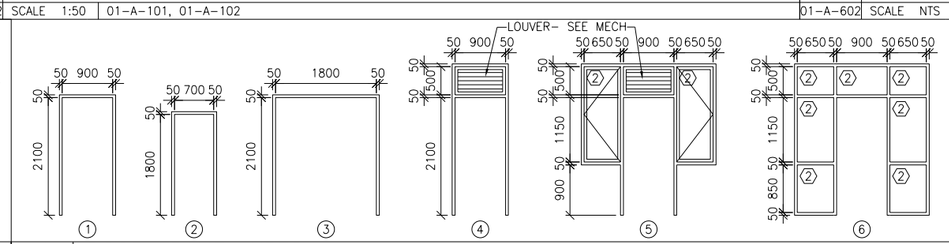

1 DOOR FRAME TYPES

01-A-602 SCALE 1:50 01-A-101, 01-A-102

REV	DATE	BY	SUB/APP	DESCRIPTION
0	06/30/10			SITE ADAPT CONSTRUCTION PLANS

DESIGNED K. BASS
DRAWN C. SALEEBY
CHECKED K. BASS
IN CHARGE D. WHEELER
DATE 30 JUNE 2010

AFGHAN NATIONAL SECURITY FORCE
COMPREHENSIVE PLAN FOR FACILITIES DEVELOPMENT
MINISTRY OF INTERIOR (MoI) – AFGHAN NATIONAL POLICE
PROVINCIAL FIRE STATION – TYPE-B

DOOR & WINDOW SCHEDULE

SCALE AS SHOWN

PROJECT NO. 6151-08-0328

01-A-602

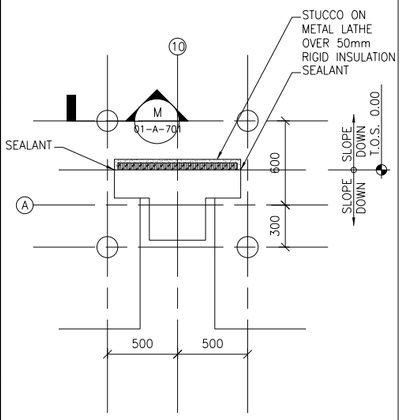

N | BOLLARD LOCATION DETAIL
01-A-701 SCALE 1:20 01-A-101

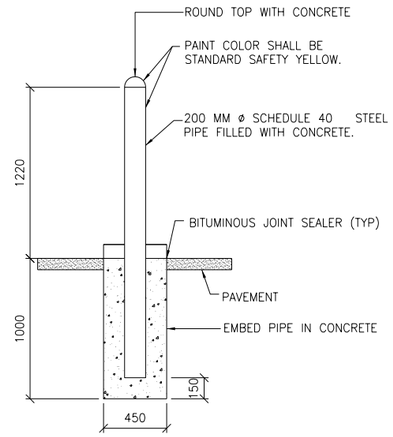

M | TYP. SECTION OF BOLLARDS
01-A-701 SCALE 1:20 01-A-101

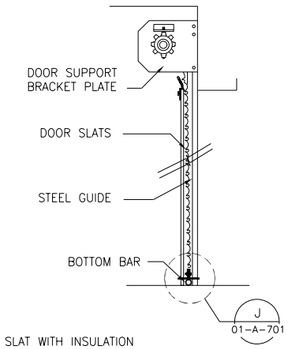

L | OVERHEAD DOOR SECTION
01-A-701 SCALE 1:50 01-A-701

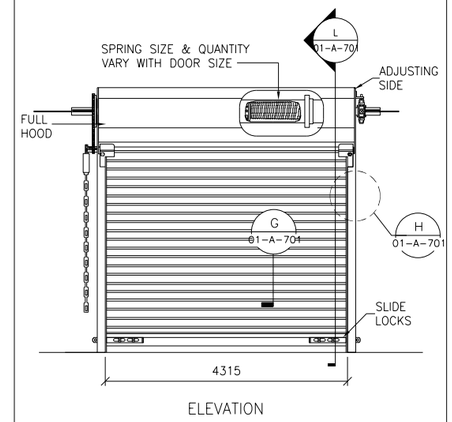

K | OVERHEAD DOOR ELEVATION
01-A-701 SCALE 1:50 01-A-101

OVERHEAD DOOR NOTES

1. STRUCTURAL STEEL PIPE BARREL
2. 750mm (3inch) REPLACEABLE CURVED OR FLAT SLATS MADE FROM MIN, 22 GAUGE HOT-DIPPED GAL. STEEL.
3. INDIVIDUAL SLATS CAN BE REPLACED EASILY IF DAMAGED BY EQUIPMENT TRAFFIC INSURING SECURITY SAFETY AND LONG LASTING AESTHETIC APPEAL.
4. STRUCTURAL STEEL 2 ANGLE BOTTOM BAR WITH INTEGRAL REINFORCEMENT INCLUDES A TWO PART POSI-LOCK DOOR STOP FOR ADDITIONAL SAFETY.
5. FULL WIDTH PVC BULB-TYPE ASTRAGAL PROVIDES SEAL FOR IRREGULAR FLOORS.
6. STRUCTURAL STEEL 3-PIECE ANGLE GUIDES WITH DURABLE EPOXY PAINT.
7. CAST STEEL END LOCKS STANDARD; REDUCE FRICTION AND NOISE AND PROVIDES CURTAIN ALIGNMENT DURING OPERATION AND WIND LOADING
8. AVAILABLE SIZE IS 4300mm (14.2 foot) WIDTH AND 4300mm HIGH.
9. 20 GAUGE HEX-SHAPED HOOD ASSEMBLY STANDARD.
10. FACTORY PRE-STRETCHED AND PRE-LUBRICATED SPRING.

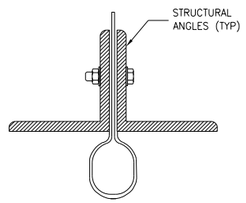

J | BOTTOM BAR W/ VINYL ASTRAGAL
01-A-701 SCALE 1:5 01-A-701

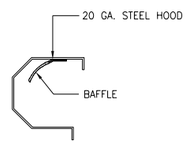

I | GALVANIZED STEEL HOOD SECT.
01-A-701 SCALE 1:5 01-A-701

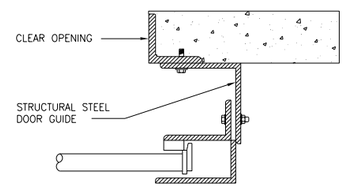

H | STEEL JAMB GUIDE DETAIL
01-A-701 SCALE 1:5 01-A-701

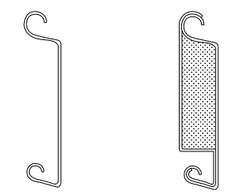

G | FLAT SLAT W/ INSULATED
01-A-701 SCALE 1:5 01-A-701

F | FLAT SLAT DETAIL
01-A-701 SCALE 1:10 01-A-701

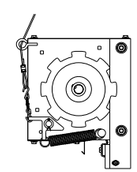

E | DRIVE HEAD PLATE DETAIL
01-A-701 SCALE 1:10 01-A-701

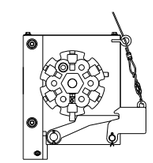

D | TENSION HEAD PLATE DETAIL
01-A-701 SCALE 1:10 01-A-701

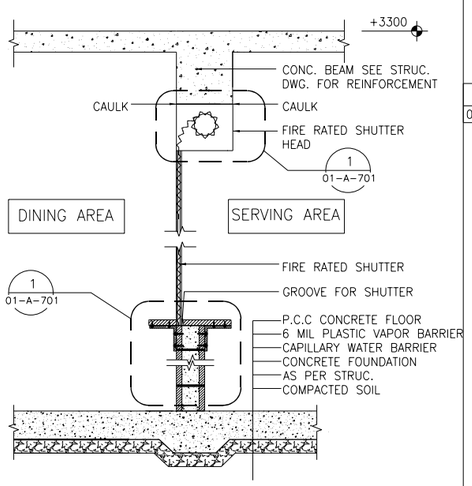

C | FIRE SHUTTER SECTION THROUGH WALL
01-A-701 SCALE 1:20 01-A-101

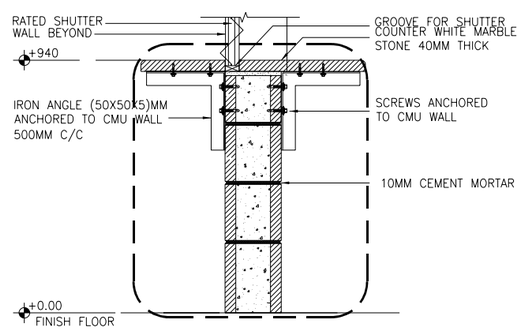

B | KITCHEN SERVICE COUNTER DETAIL
01-A-701 SCALE 1:10 01-A-101

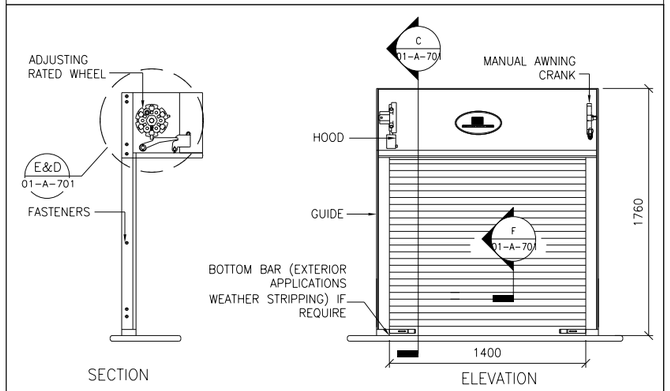

A | PASSTHRU ROLLING RATED SHUTTER
01-A-701 SCALE 1:20 01-A-101

SHUTTER NOTES

1. DESIGN WITH AUTOMATIC CLOSURE U.L MARK ALTERNATE END LOCKS, TUBULAR BOTTOM BAR IS STANDARD, CURTAIN IS 22 GA STEEL, HOODS ARE 16 GA GALVANIZED STEEL. ALL GALVANIZING PER ASTM. A-525 STANDARDS. THE PLACE WHERE FIRE RATED SHUTTER FITTED TO STEEL, THE STEEL MUST BE INSULATED WHERE INSULATION HAS BEEN BREACHED. EDGES SHALL BE TURNED DOWN 30mm AND CORNERSSHALL BE TURNED DOWN 30mm AND CORNERS TO ANCHORS SHALL BE WELDED AND GROUND SMOOTH.

2. FINISHES

CURTAIN FINISH: GALVANIZED & PRIMED STEEL
BOTTOM BAR FINISH: PRIMED STEEL
GUIDE FINISH: PRIMED STEEL
FRONT HOOD: GALVANIZED & PRIMED STEEL
OPERATION COVER: GALVANIZED & PRIMED STEE

U.L RATING

ITEM.01: UL 90 MIN LABEL

REV	DATE	BY	SUB	APP	DESCRIPTION
0	06/30/10				SITE ADAPT CONSTRUCTION PLANS

DESIGNED K. BASS
DRAWN C. SALEEBY
CHECKED K. BASS
IN CHARGE D. WHEELER
DATE 30 JUNE 2010

AFGHAN NATIONAL SECURITY FORCE
COMPREHENSIVE PLAN FOR FACILITIES DEVELOPMENT

MINISTRY OF INTERIOR (MoI) – AFGHAN NATIONAL POLICE
PROVINCIAL FIRE STATION – TYPE-B

DETAILS

SCALE AS SHOWN

PROJECT NO. 6151-08-0328

01-A-701

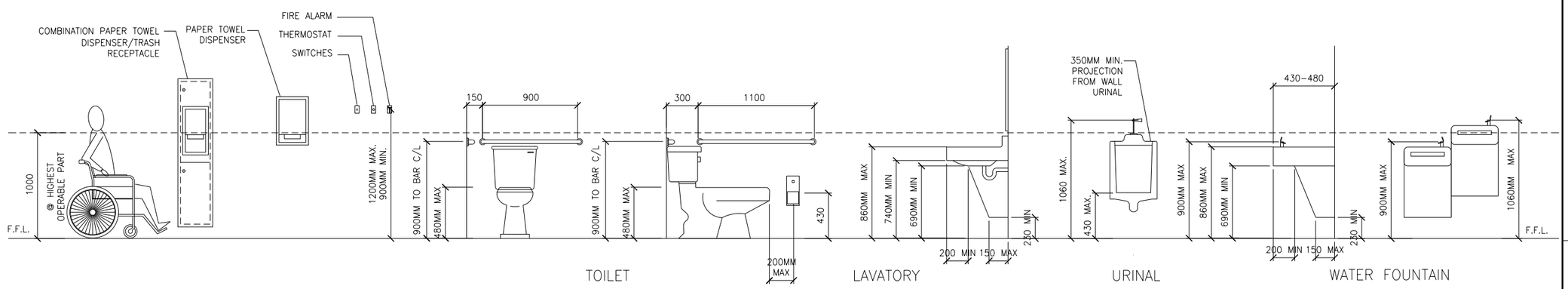

A ACCESSIBLE RESTROOM REQUIREMENTS

01-A-702 SCALE NTS

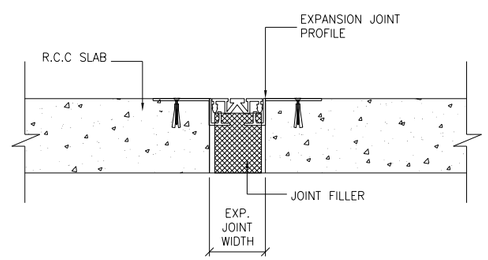

5 FLOOR EXPANSION JOINT DETAIL

01-A-702 SCALE 1:2 01-A-101, 01-A-102

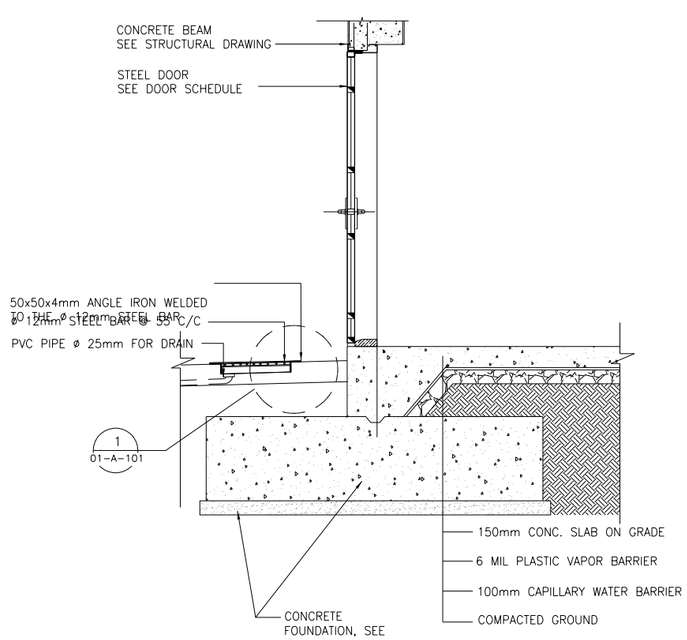

4 SHOE CLEAN GRATE SECTION

01-A-702 SCALE 1:20 01-A-702

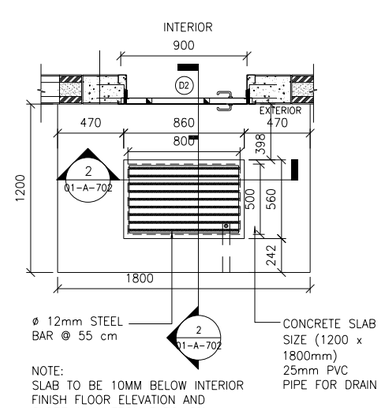

3 SHOE CLEAN GRATE PLAN

01-A-702 SCALE 1:20 01-A-101

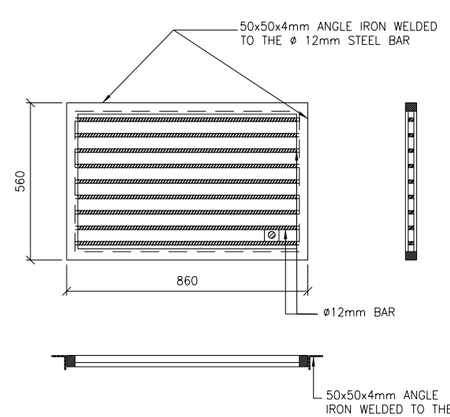

2 GRATE DETAILS

01-A-702 SCALE 1:10 01-A-702

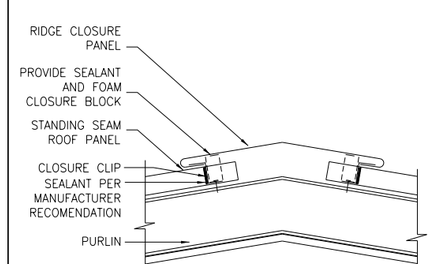

1 RIDGE CAP DETAIL TYP.

01-A-702 SCALE 1:20 01-A-301

REV	DATE	BY	SUB	APP	DESCRIPTION
0	06/30/10				SITE ADAPT CONSTRUCTION PLANS

DESIGNED K. BASS
DRAWN C. SALEEBY
CHECKED K. BASS
IN CHARGE D. WHEELER
DATE 30 JUNE 2010

AFGHAN NATIONAL SECURITY FORCE
COMPREHENSIVE PLAN FOR FACILITIES DEVELOPMENT

MINISTRY OF INTERIOR (MoI) – AFGHAN NATIONAL POLICE
PROVINCIAL FIRE STATION – TYPE-B

DETAILS

SCALE AS SHOWN

PROJECT NO. 6151-08-0328

01-A-702

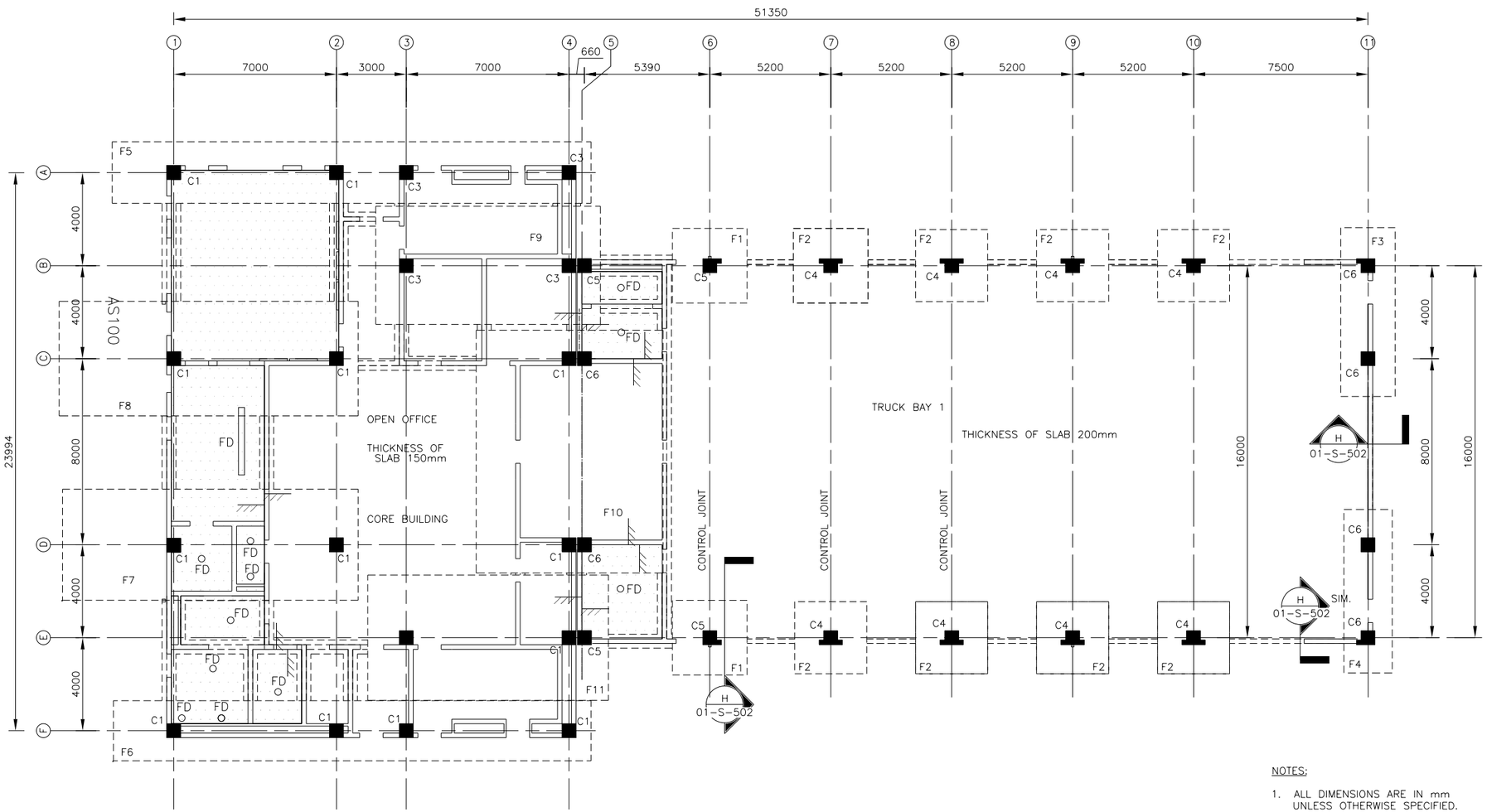

NOTES;

1. ALL DIMENSIONS ARE IN mm UNLESS OTHERWISE SPECIFIED.
2. FOR GENERAL STRUCTURAL NOTES SEE 00-S-001 THROUGH 00-S-004.
3. FOR TYPICAL DETAILS SEE 00-S-501 THROUGH 00-S-505.
4. F-# INDICATES COLUMN FOOTING, SEE DRAWING 01-S-608 FOR SCHEDULE.
5. C-# INDICATES CONC. COLUMN, SEE DRAWING 01-S-604 & 01-S-605.

LEGEND

OFD FLOOR DRAIN

SLAB DEPRESSION

1 FOUNDATION PLAN

01-S-101 SCALE 1:100

REV	DATE	BY	SUB	APP	DESCRIPTION
0	06/30/10				SITE ADAPT CONSTRUCTION PLANS

DESIGNED A. KHOTPAL
DRAWN M. LORENZ
CHECKED M. GARVER
IN CHARGE D. WHEELER
DATE 30 JUNE 2010

AFGHAN NATIONAL SECURITY FORCE COMPREHENSIVE PLAN FOR FACILITIES DEVELOPMENT

MINISTRY OF INTERIOR (MoI) – AFGHAN NATIONAL POLICE PROVINCIAL FIRE STATION – TYPE-B

FIRE STATION FOUNDATION PLAN

SCALE AS SHOWN

PROJECT NO. 6151-08-0328

01-S-101

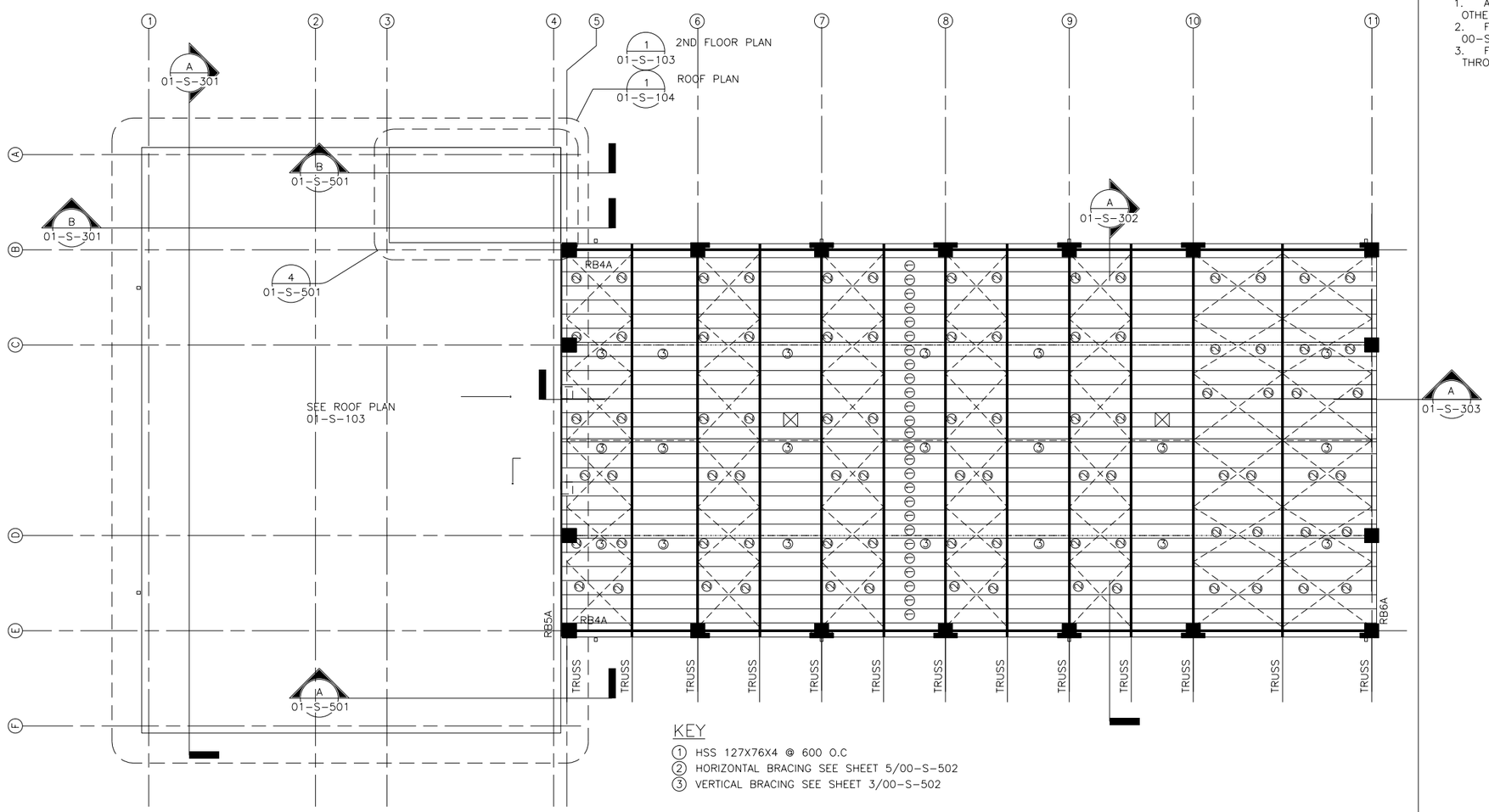

NOTES:
1. ALL DIMENSIONS ARE IN mm UNLESS OTHERWISE SPECIFIED.
2. FOR GENERAL STRUCTURAL NOTES SEE 00-S-001 THROUGH 00-S-004.
3. FOR TYPICAL DETAILS SEE 00-S-501 THROUGH 00-S-505.

KEY
1. HSS 127X76X4 @ 600 O.C
2. HORIZONTAL BRACING SEE SHEET 5/00-S-502
3. VERTICAL BRACING SEE SHEET 3/00-S-502

1 FIRE STATION ROOF PLAN
01-S-102 SCALE 1:100

REV	DATE	BY	SUB	APP	DESCRIPTION
0	06/30/10				SITE ADAPT CONSTRUCTION PLANS

DESIGNED A. WHITTAL
DRAWN M. LORENZ
CHECKED M. GARVER
IN CHARGE D. WHEELER
DATE 30 JUNE 2010

AFGHAN NATIONAL SECURITY FORCE COMPREHENSIVE PLAN FOR FACILITIES DEVELOPMENT

MINISTRY OF INTERIOR (MoI) – AFGHAN NATIONAL POLICE PROVINCIAL FIRE STATION – TYPE-B

FIRE STATION ROOF PLAN

SCALE AS SHOWN

PROJECT NO. 6151-08-0328

01-S-102

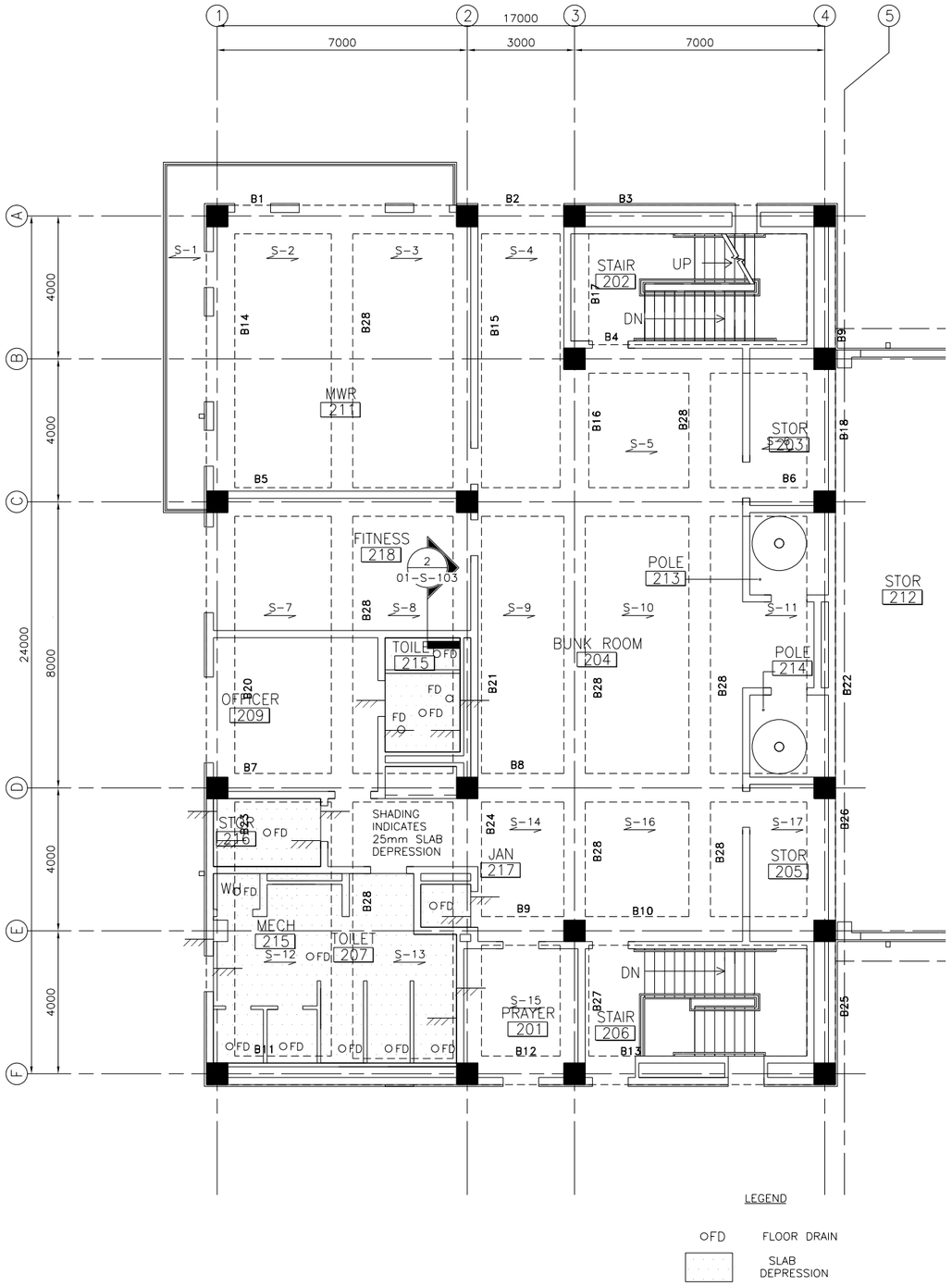

NOTES:

1. ALL DIMENSIONS ARE IN mm UNLESS OTHERWISE SPECIFIED.
2. FOR GENERAL STRUCTURAL NOTES SEE 00-S-001 THROUGH 00-S-004.
3. FOR TYPICAL DETAILS SEE 00-S-501 THROUGH 00-S-505.
4. F-# INDICATES COLUMN FOOTING, SEE DRAWING 01-S-608 FOR SCHEDULE.
5. C-# INDICATES CONC. COLUMN, SEE DRAWING 01-S-604 & 01-S-605.

1 SECOND FLOOR FRAMING PLAN

01-S-103 SCALE 1:70

REV	DATE	BY	SUB	APP	DESCRIPTION
0	06/30/10				SITE ADAPT CONSTRUCTION PLANS

DESIGNED A. KHOTPAL
DRAWN M. LORENZ
CHECKED M. CARVER
INCHARGE D. WHEELER
DATE 30 JUNE 2010

AFGHAN NATIONAL SECURITY FORCE
COMPREHENSIVE PLAN FOR FACILITIES DEVELOPMENT

MINISTRY OF INTERIOR (MoI) – AFGHAN NATIONAL POLICE
PROVINCIAL FIRE STATION – TYPE-B

FIRE STATION SECOND FLOOR SLAB FRAMING PLAN

SCALE AS SHOWN

PROJECT NO. 6151-08-0328

01-S-103

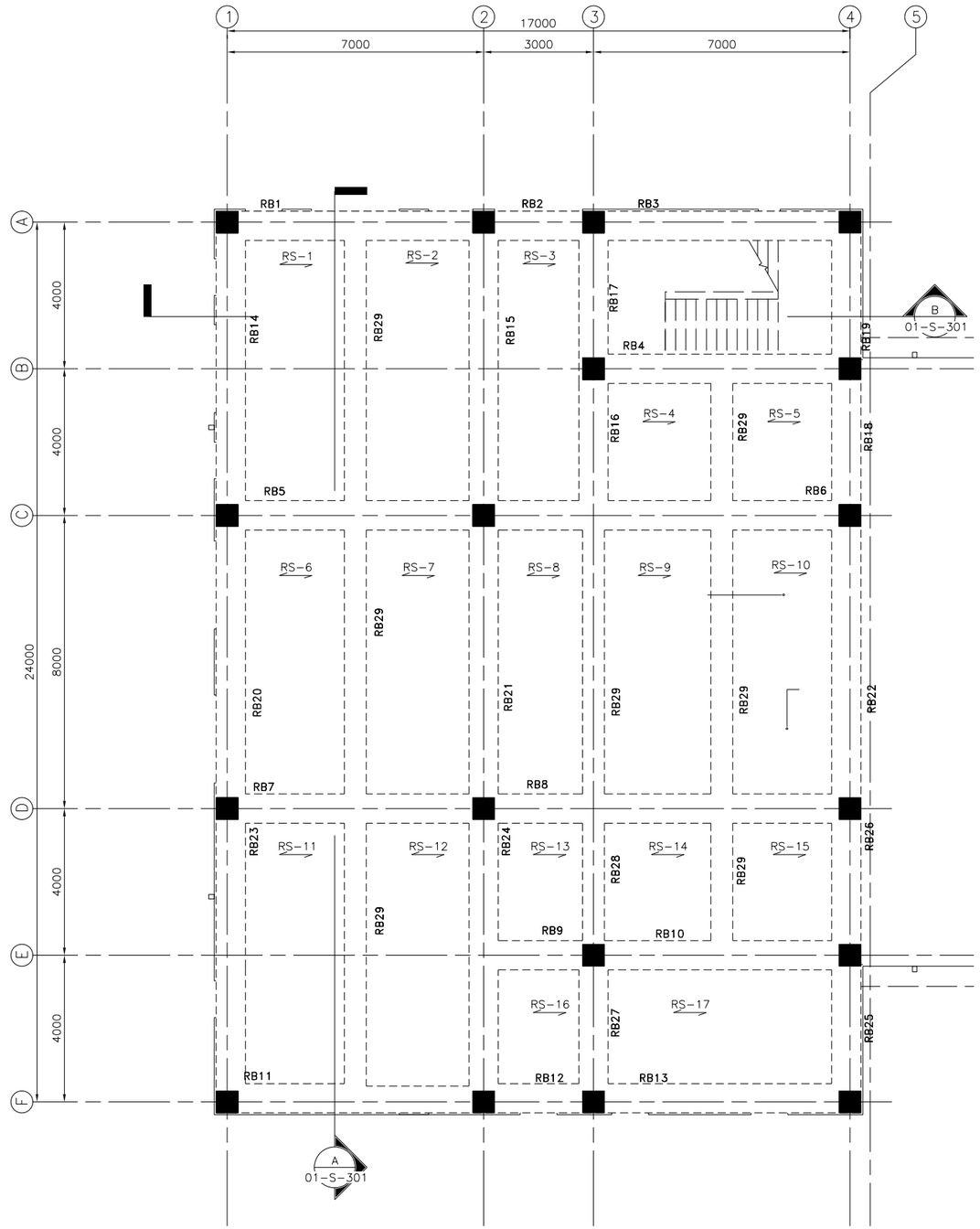

NOTES:

1. ALL DIMENSIONS ARE IN mm UNLESS OTHERWISE SPECIFIED.
2. FOR GENERAL STRUCTURAL NOTES SEE 00-S-001 THROUGH 00-S-004.
3. FOR TYPICAL DETAILS SEE 00-S-501 THROUGH 00-S-505.
4. F-# INDICATES COLUMN FOOTING, SEE DRAWING 01-S-608 FOR SCHEDULE.
5. C-# INDICATES CONC. COLUMN, SEE DRAWING 01-S-604 & 01-S-605.

1 ROOF SLAB FRAMING PLAN
01-S-104 SCALE 1:70

2 STAIR ROOF SLAB FRAMING PLAN
01-S-104 SCALE ####

REV	DATE	BY	SUB/APP	DESCRIPTION
0	06/30/10			SITE ADAPT CONSTRUCTION PLANS

DESIGNED A. KHITAL
DRAWN M. LORENZ
CHECKED M. GARVER
IN CHARGE D. WHEELER
DATE 30 JUNE 2010

AFGHAN NATIONAL SECURITY FORCE
COMPREHENSIVE PLAN FOR FACILITIES DEVELOPMENT
MINISTRY OF INTERIOR (MoI) – AFGHAN NATIONAL POLICE
PROVINCIAL FIRE STATION – TYPE-B
FIRE STATION ROOF SLAB FRAMING PLAN

SCALE AS SHOWN
PROJECT NO. 6151-08-0328
01-S-104

NOTES:
1. FOR COL. REINFORCEMENT SEE 01-S-604 THROUGH 01-S-606.
2. FOR BEAM REINFORCEMENT SEE 01-S-601 THROUGH 01-S-602.
3. FOR SLAB REINFORCEMENT SEE 01-S-603.

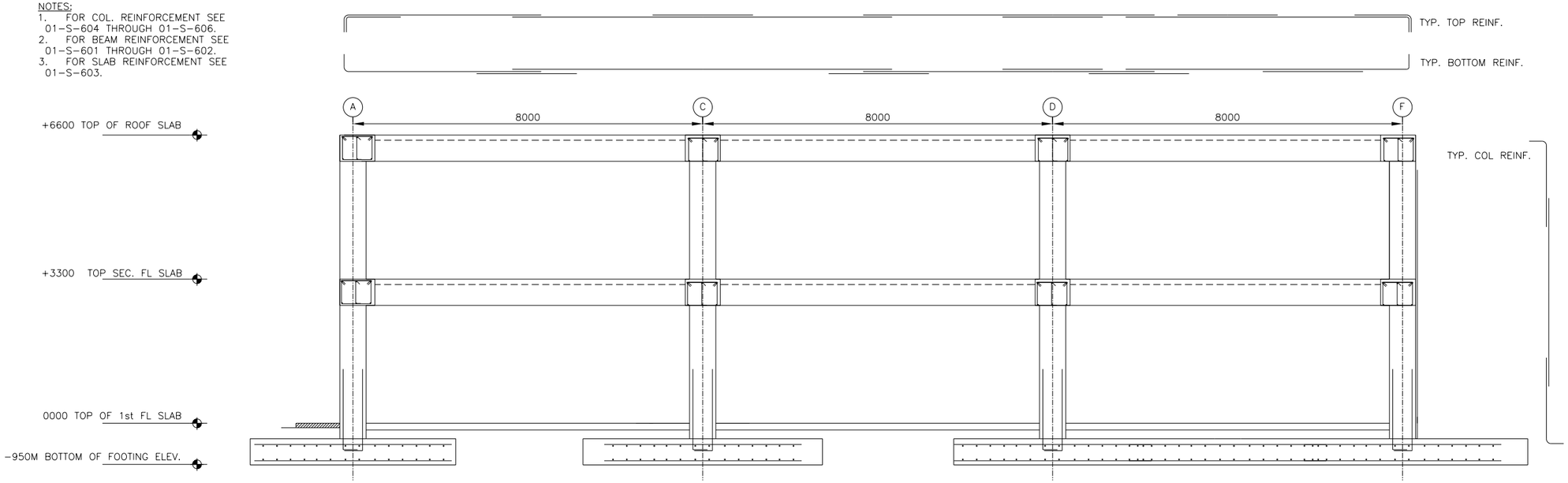

A FRAMING SECTION
01-S-301 SCALE: 1:50

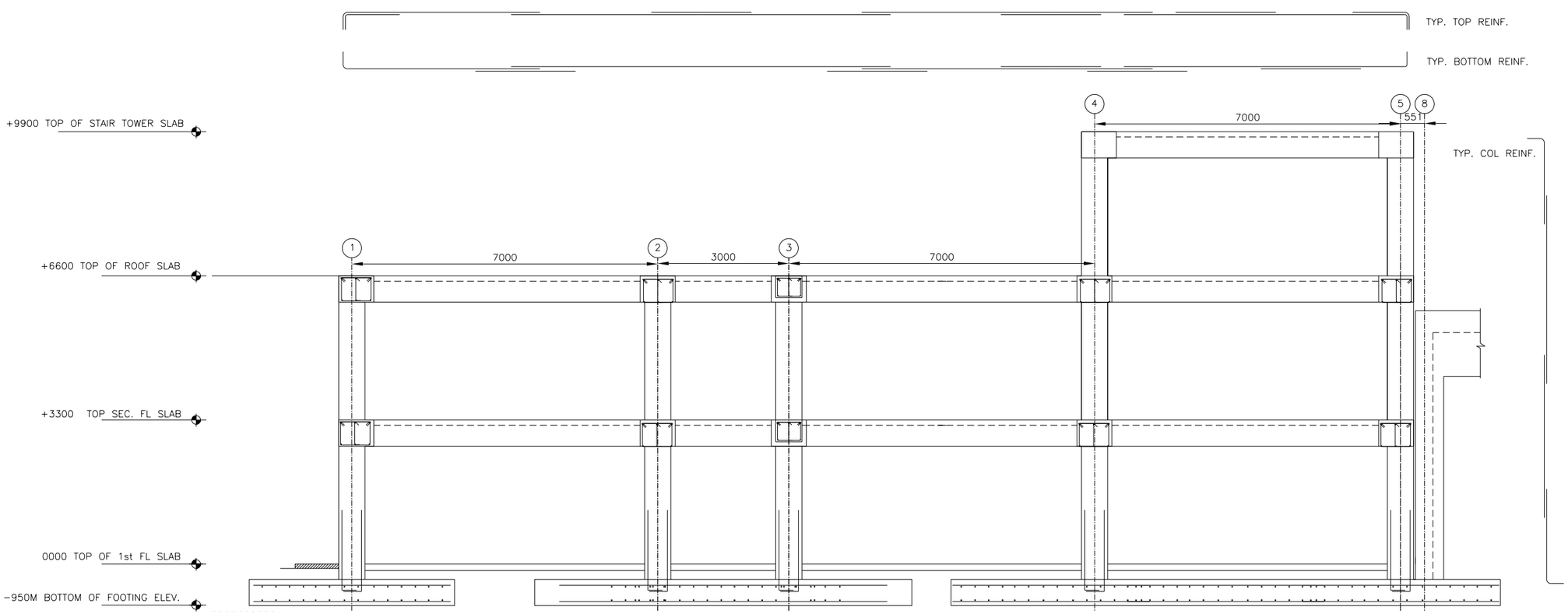

B FRAMING SECTION
01-S-301 SCALE: 1:50

REV	DATE	BY	SUB'APP	DESCRIPTION
0	06/30/10			SITE ADAPT CONSTRUCTION PLANS

DESIGNED BY: STEGMEIR
DRAWN BY: M. LORENZ
CHECKED: M. GARVER
IN CHARGE: D. WHEELER
DATE: 30 JUNE 2010

AFGHAN NATIONAL SECURITY FORCE COMPREHENSIVE PLAN FOR FACILITIES DEVELOPMENT

MINISTRY OF INTERIOR (MoI) – AFGHAN NATIONAL POLICE PROVINCIAL FIRE STATION – TYPE-B

FIRE STATION SECTION A

SCALE: AS SHOWN

PROJECT NO. 6151-08-0328

01-S-301

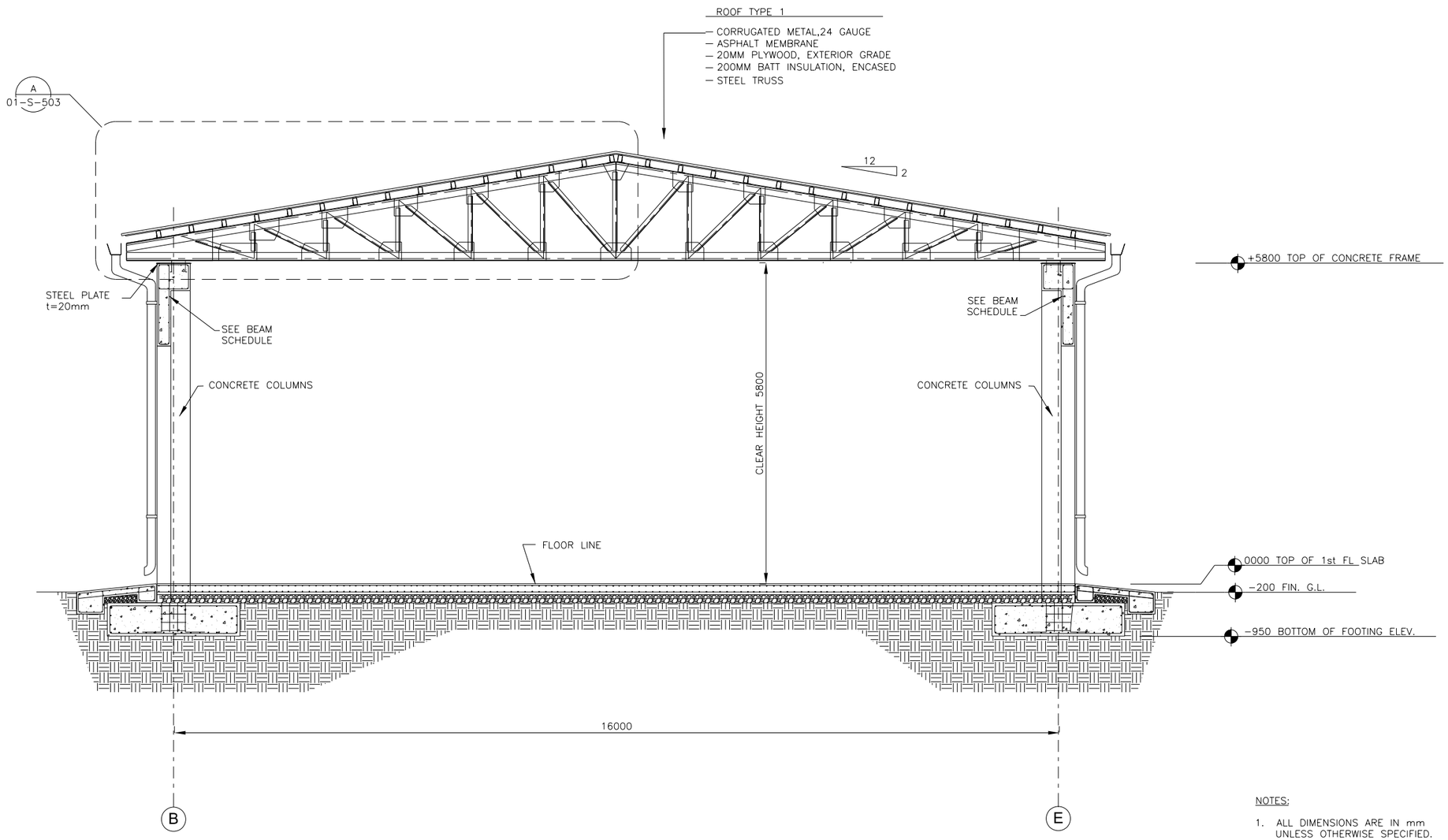

NOTES:

1. ALL DIMENSIONS ARE IN mm UNLESS OTHERWISE SPECIFIED.

2. FOR GENERAL STRUCTURAL NOTES SEE 00-S-001 THROUGH 00-S-004.

3. FOR TYPICAL DETAILS SEE 00-S-501 THROUGH 00-S-505.

A SECTION THROUGH TRUCK BAY

01-S-302 SCALE 1:40

REV	DATE	BY	SUB	APP	DESCRIPTION
0	06/30/10				SITE ADAPT CONSTRUCTION PLANS

DESIGNED V. STEGMEIR
DRAWN M. LORENZ
CHECKED M. GARVER
IN CHARGE D. WHEELER
DATE 30 JUNE 2010

AFGHAN NATIONAL SECURITY FORCE
COMPREHENSIVE PLAN FOR FACILITIES DEVELOPMENT

MINISTRY OF INTERIOR (MoI) - AFGHAN NATIONAL POLICE
PROVINCIAL FIRE STATION - TYPE-B

FIRE STATION SECTION B

SCALE AS SHOWN

PROJECT NO. 6151-08-0328

01-S-302

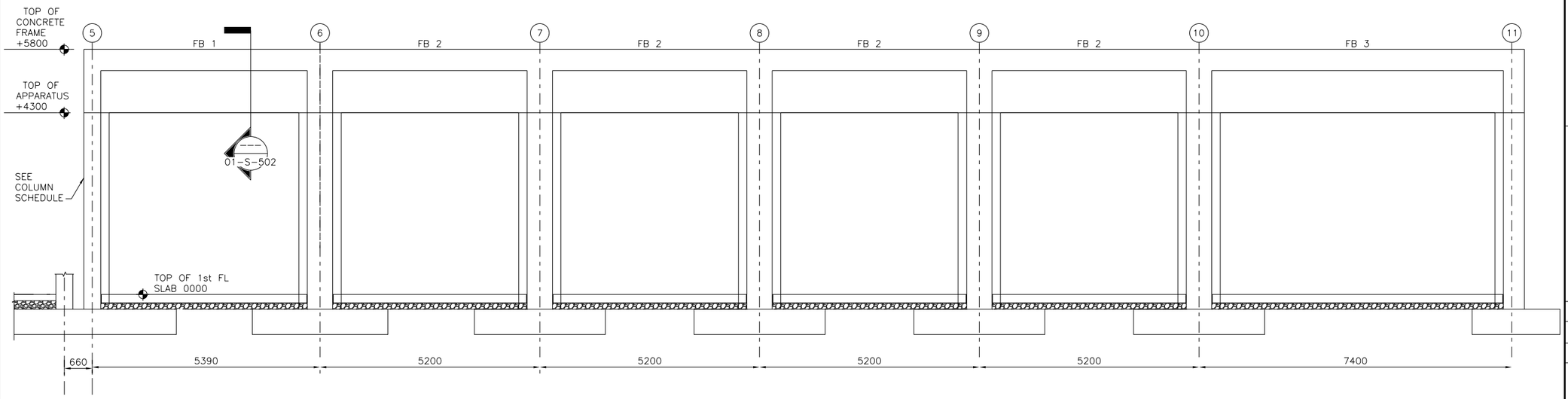

A SECTION OF VEHICLE BAY FRAME

01-S-303 SCALE 1:50

REV	DATE	BY	SUB	APP	DESCRIPTION
0	06/30/10				SITE ADAPT CONSTRUCTION PLANS

DESIGNED V. STEGMEIR
DRAWN M. LORENZ
CHECKED MIKE GARVER
IN CHARGE D. WHEELER
DATE 30 JUNE 2010

AFGHAN NATIONAL SECURITY FORCE
COMPREHENSIVE PLAN FOR FACILITIES DEVELOPMENT

MINISTRY OF INTERIOR (MoI) – AFGHAN NATIONAL POLICE
PROVINCIAL FIRE STATION – TYPE-B

FIRE STATION VEHICLE BAY FRAME SECTION

SCALE AS SHOWN

PROJECT NO. 6151-08-0328

01-S-303

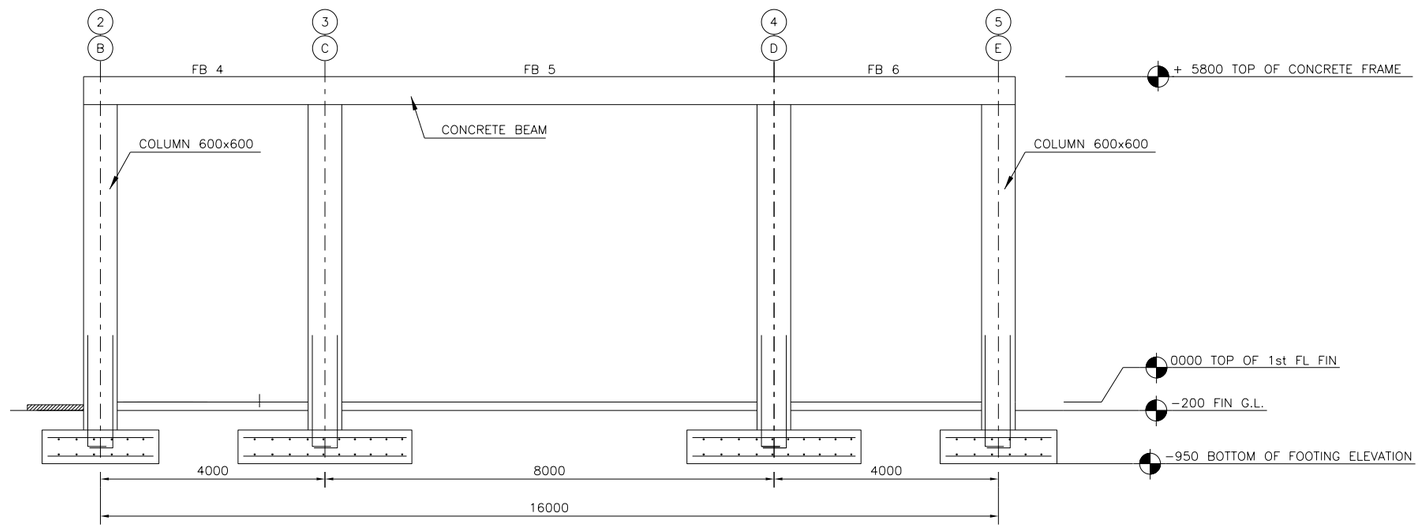

A FRAMING ELEVATION AT END WALL @ TRUCK BAY 1 & 2

01-S-304 SCALE 1:50

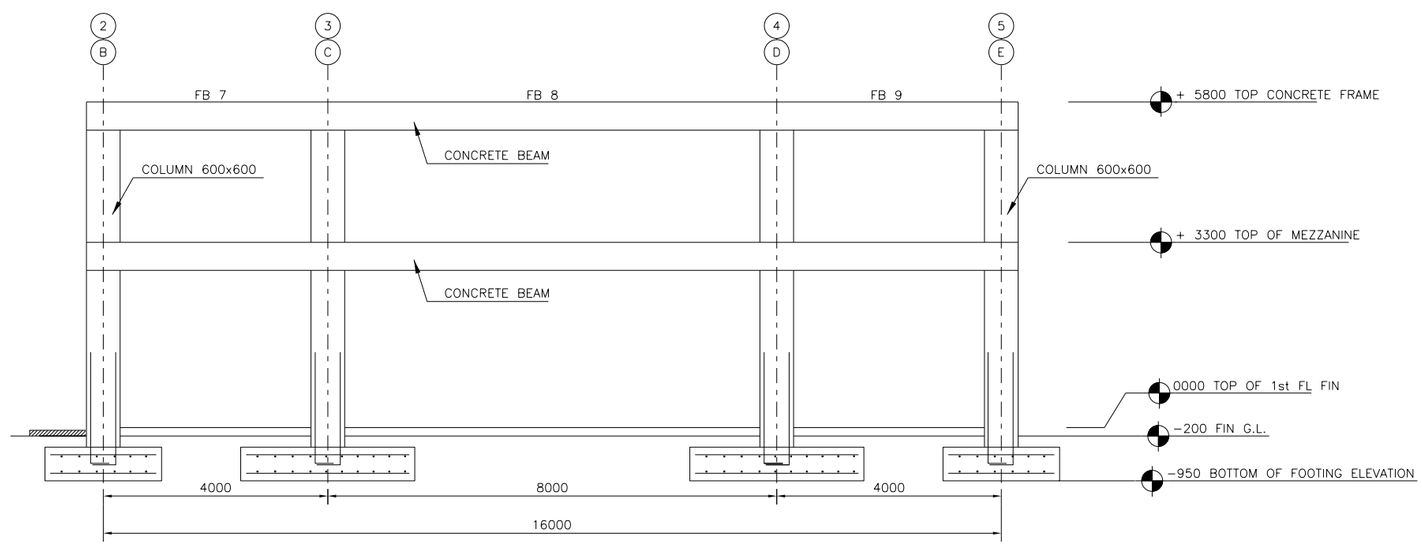

B FRAMING ELEVATION OF MEZZANINE @ TRUCK BAY 1 & 2

01-S-304 SCALE 1:50

REV	DATE	BY	SUB/APP	DESCRIPTION
0	06/30/10			SITE ADAPT CONSTRUCTION PLANS

DESIGNED V. STEGMEIR
DRAWN M. LORENZ
CHECKED MIKE GARVER
IN CHARGE D. WHEELER
DATE 30 JUNE 2010

AFGHAN NATIONAL SECURITY FORCE
COMPREHENSIVE PLAN FOR FACILITIES DEVELOPMENT

MINISTRY OF INTERIOR (MoI) – AFGHAN NATIONAL POLICE
PROVINCIAL FIRE STATION – TYPE-B

FIRE STATION VEHICLE BAY FRAME SECTION

SCALE AS SHOWN

PROJECT NO. 6151-08-0328

01-S-304

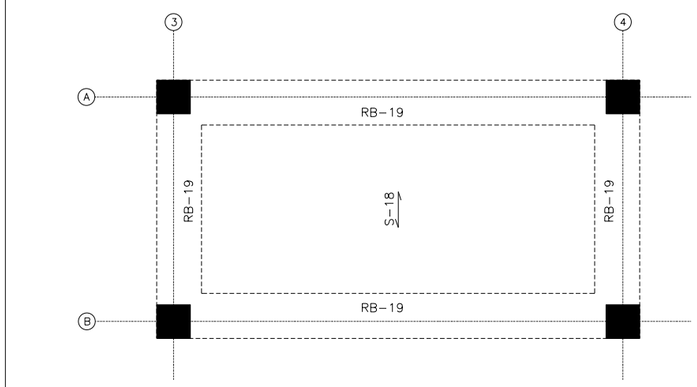

4 TOP LEVEL STAIR PLAN
01-S-501 SCALE 1:50

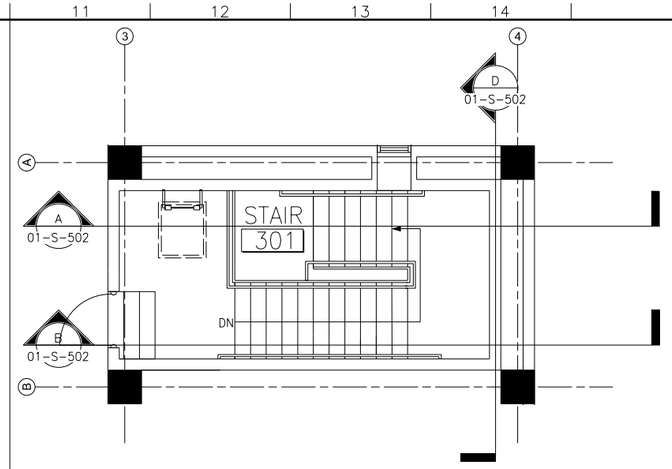

3 TOP LEVEL STAIR PLAN
01-S-501 SCALE 1:50

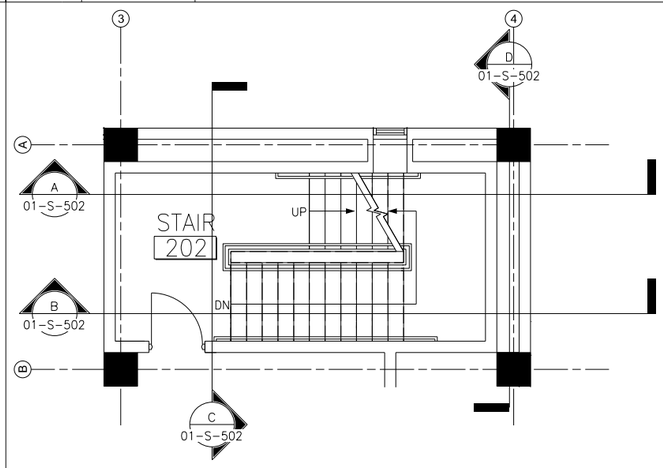

2 SECOND FLOOR STAIR PLAN
01-S-501 SCALE 1:50

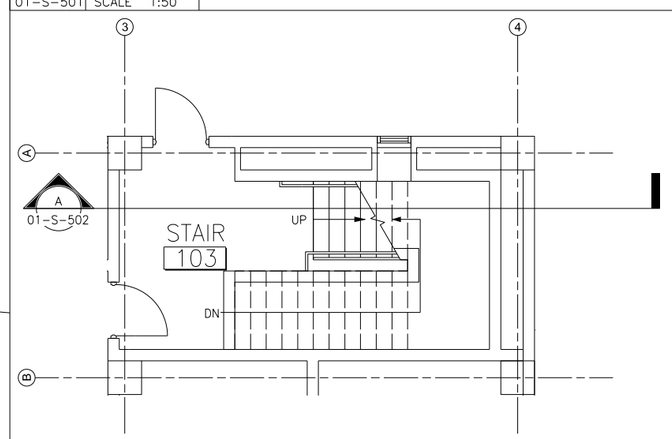

1 FIRST FLOOR STAIR PLAN
01-S-501 SCALE 1:50

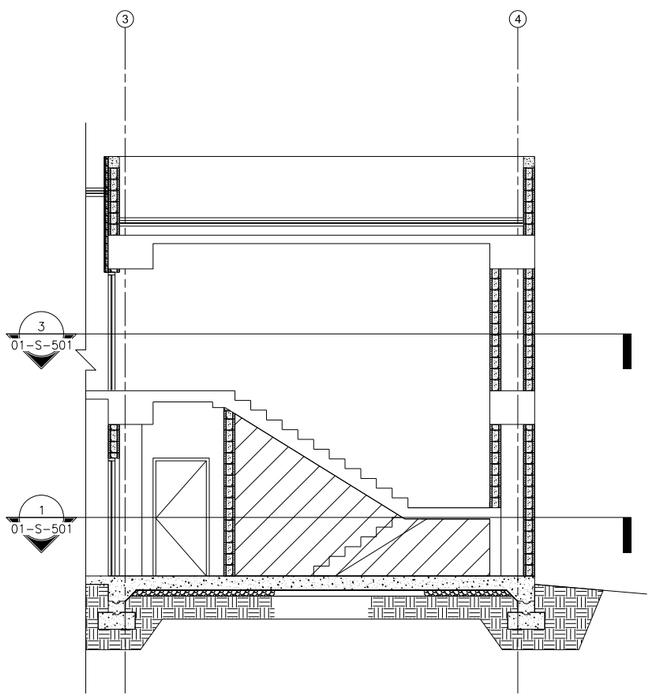

A STAIR SECTION BETWEEN COL. LINES 1 & 3
01-S-501 SCALE 1:50

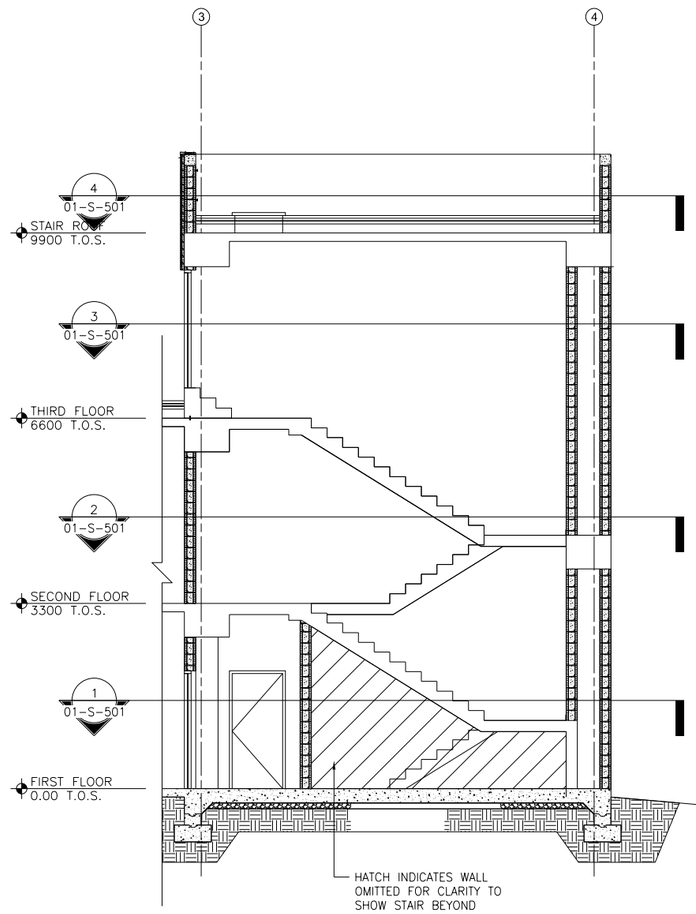

B STAIR SECTION BETWEEN COL. LINES A & B
01-S-501 SCALE 1:50

REV	DATE	BY	SUB	APP	DESCRIPTION
0	06/30/10				SITE ADAPT CONSTRUCTION PLANS

DESIGNED VY STEGEWEIR
DRAWN M. LORENZ
CHECKED M. GARVER
IN CHARGE D. WHEELER
DATE 30 JUNE 2010

AFGHAN NATIONAL SECURITY FORCE
COMPREHENSIVE PLAN FOR
FACILITIES DEVELOPMENT

MINISTRY OF INTERIOR (MoI) – AFGHAN NATIONAL POLICE
PROVINCIAL FIRE STATION – TYPE-B

FIRE STATION STAIR REINFORCEMENT PLANS & SECTIONS

SCALE
AS SHOWN

PROJECT NO.
6151-08-0328

01-S-501

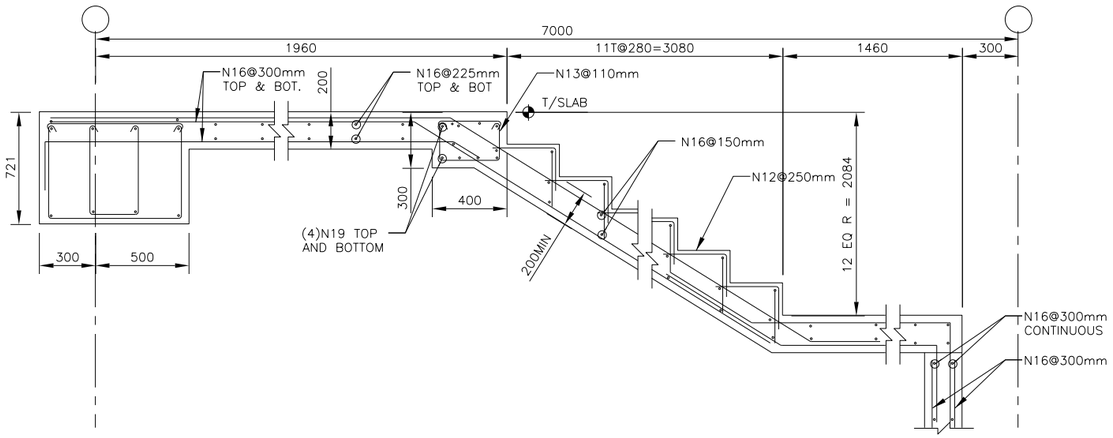

A STAIR SECTION
01-S-502 SCALE 1:15

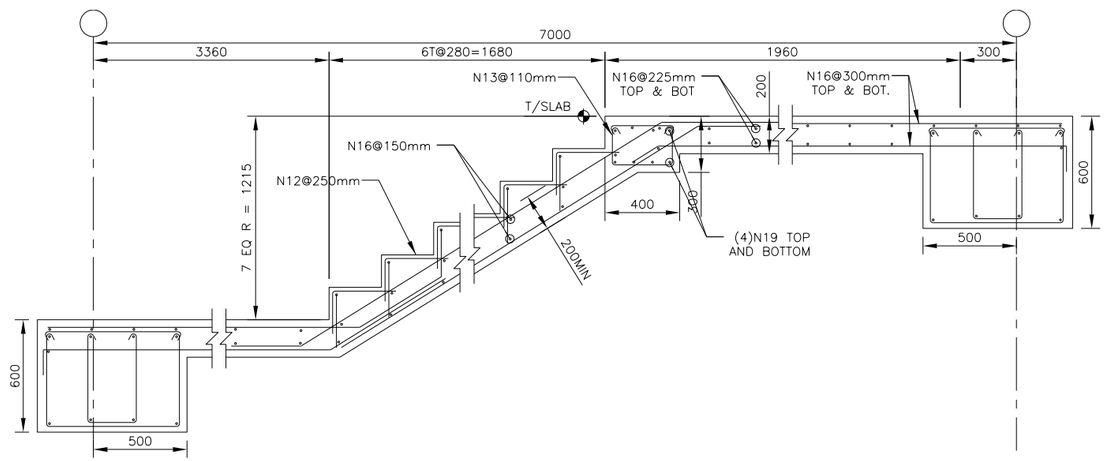

B STAIR SECTION
01-S-502 SCALE 1:15

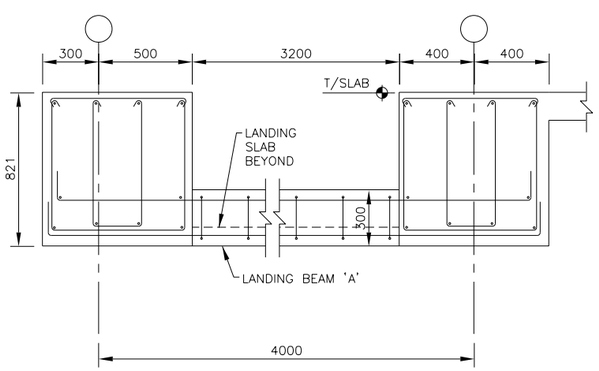

C STAIR LANDING BEAM 'A' SECTION
01-S-502 SCALE 1:15

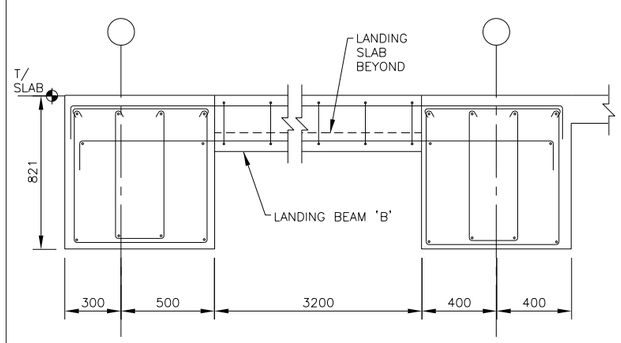

D STAIR LANDING BEAM 'B' SECTION
01-S-502 SCALE 1:15

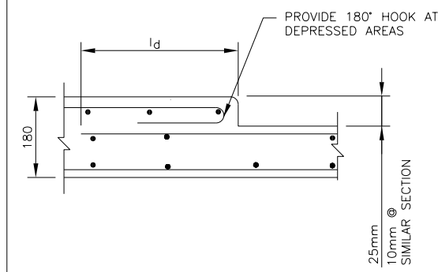

F SECTION
01-S-502 SCALE NTS

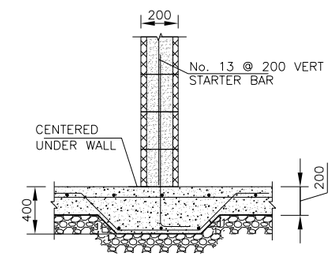

E SECTION
01-S-502 SCALE 1:15

G SECTION
01-S-502 SCALE 1:15

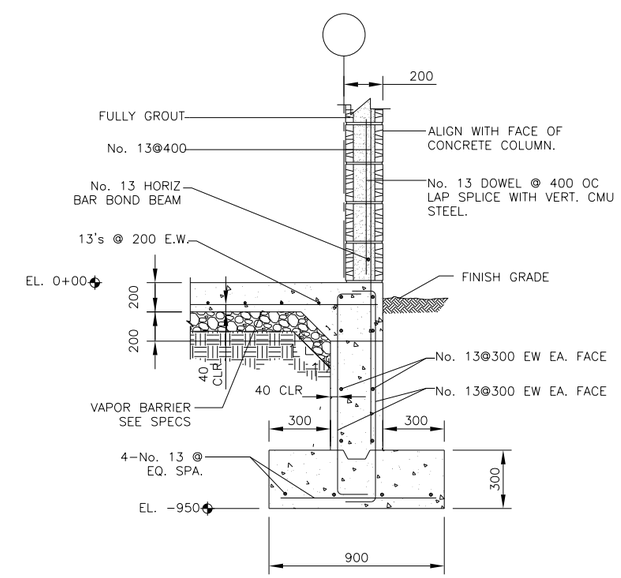

NOTE:
NO MASONRY AT SIMILAR SECTIONS

H SECTION AT EXTERIOR WALL
01-S-502 SCALE 1:15

REV	DATE	BY	SUB	APP	DESCRIPTION
0	06/30/10				SITE ADAPT CONSTRUCTION PLANS

DESIGNED A. WHITTAL
DRAWN M. LORENZ
CHECKED M. GARVER
IN CHARGE D. WHEELER
DATE 30 JUNE 2010

AFGHAN NATIONAL SECURITY FORCE
COMPREHENSIVE PLAN FOR
FACILITIES DEVELOPMENT

MINISTRY OF INTERIOR (MoI) - AFGHAN NATIONAL POLICE
PROVINCIAL FIRE STATION - TYPE-B

FIRE STATION CONCRETE DETAILS

SCALE
AS SHOWN

PROJECT NO.
6151-08-0328

01-S-502

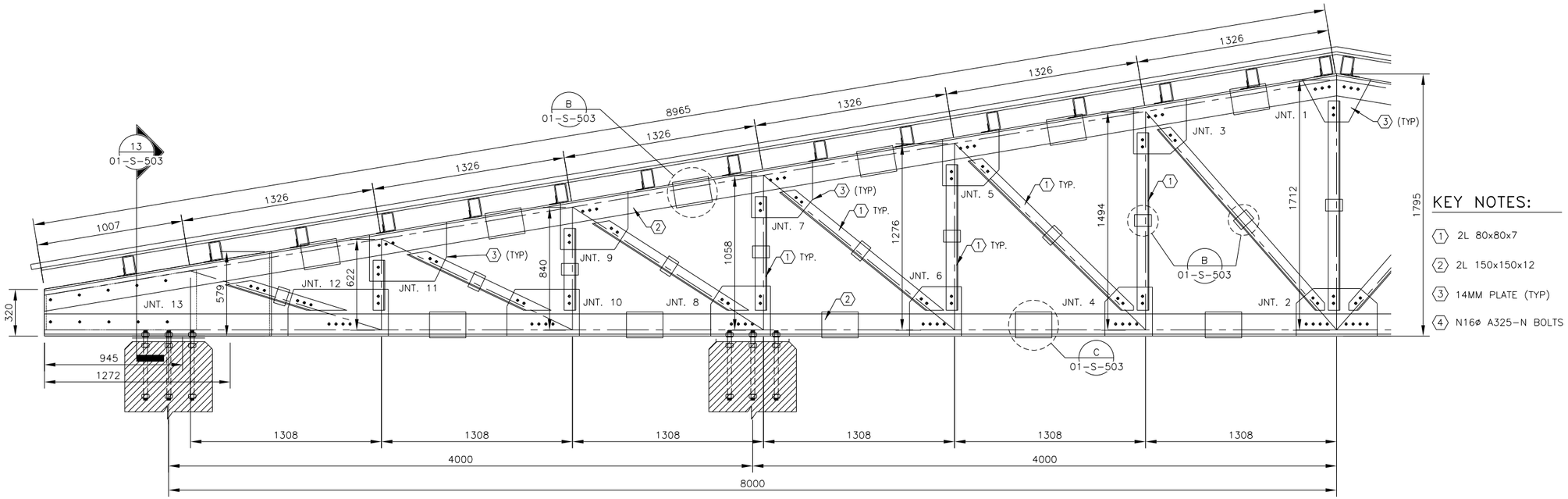

KEY NOTES:

1. 2L 80x80x7
2. 2L 150x150x12
3. 14MM PLATE (TYP)
4. N16ø A325-N BOLTS

A TRUSS DETAIL

01-S-503 SCALE 1:15

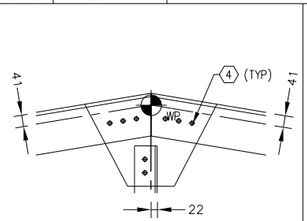

1 JOINT 1

01-S-503 SCALE 1:10

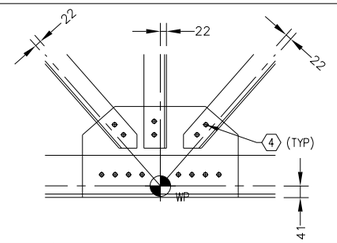

2 JOINT 2

01-S-503 SCALE 1:10

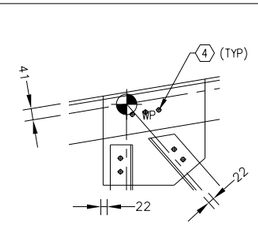

3 JOINT 3

01-S-503 SCALE 1:10

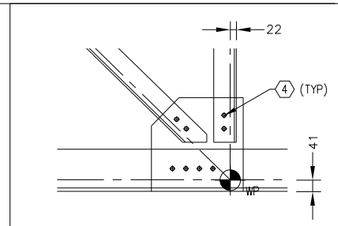

4 JOINT 4

01-S-503 SCALE 1:10

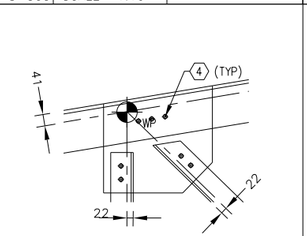

5 JOINT 5

01-S-503 SCALE 1:10

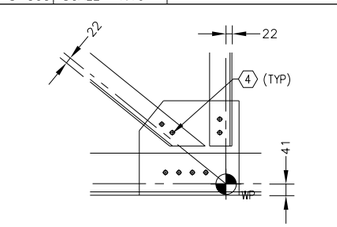

6 JOINT 6

01-S-503 SCALE 1:10

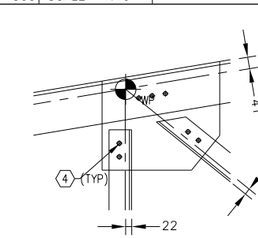

7 JOINT 7

01-S-503 SCALE 1:10

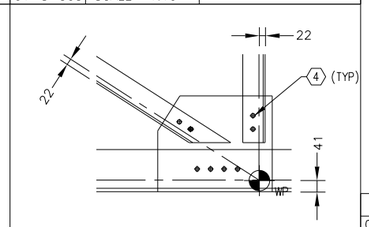

8 JOINT 8

01-S-503 SCALE 1:10

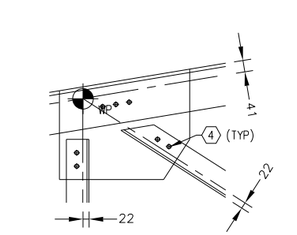

9 JOINT 9

01-S-503 SCALE 1:10

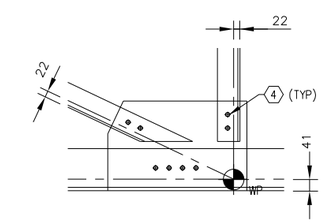

10 JOINT 10

01-S-503 SCALE 1:10

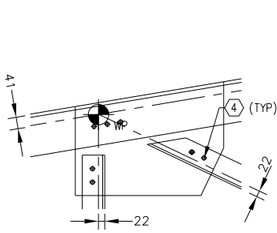

11 JOINT 11

01-S-503 SCALE 1:10

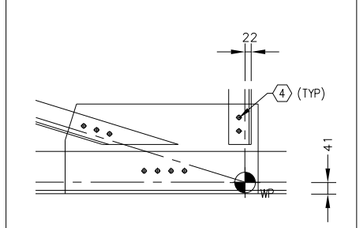

12 JOINT 12

01-S-503 SCALE 1:10

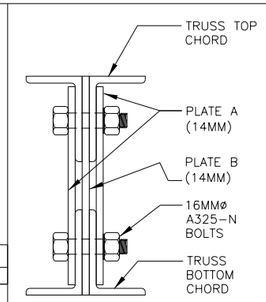

A SECTION

01-S-503 SCALE NTS

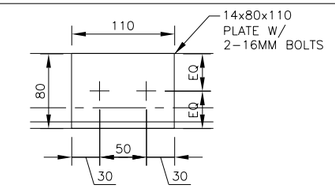

B DETAIL

01-S-503 SCALE NTS

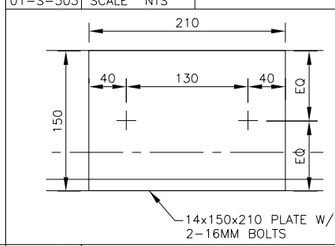

C DETAIL

01-S-503 SCALE NTS

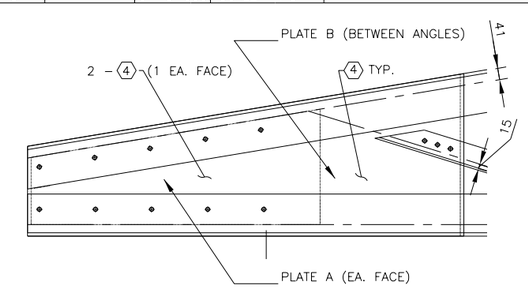

13 JOINT 13

01-S-503 SCALE 1:10

REV	DATE	BY	SUB'APP	DESCRIPTION
0	06/30/10			SITE ADAPT CONSTRUCTION PLANS

DESIGNED A. KHOTAL
DRAWN M. LORENZ
CHECKED M. GARVER
IN CHARGE D. WHEELER
DATE 30 JUNE 2010

AFGHAN NATIONAL SECURITY FORCE
COMPREHENSIVE PLAN FOR FACILITIES DEVELOPMENT

MINISTRY OF INTERIOR (MoI) – AFGHAN NATIONAL POLICE
PROVINCIAL FIRE STATION – TYPE-B

FIRE STATION TRUSS DETAILS

SCALE AS SHOWN

PROJECT NO. 6151-08-0328

01-S-503

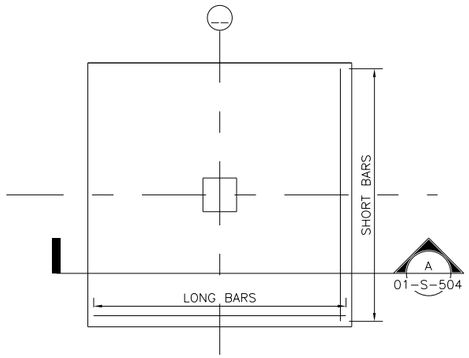

1 FOOTING TYPE 1
01-S-504 SCALE: 1:50

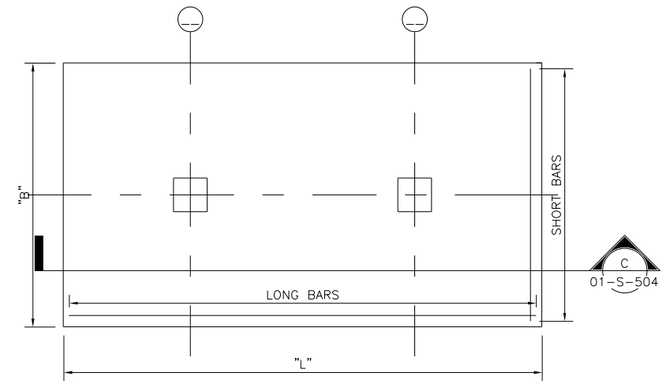

2 FOOTING TYPE 2
01-S-504 SCALE: 1:50

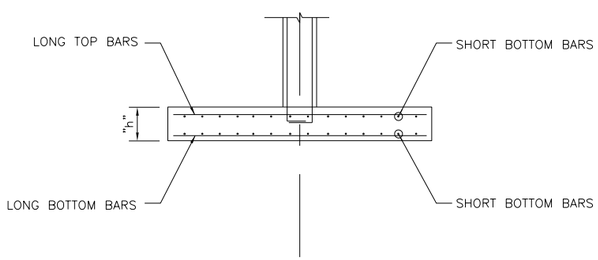

A SECTION
01-S-504 SCALE: 1:50

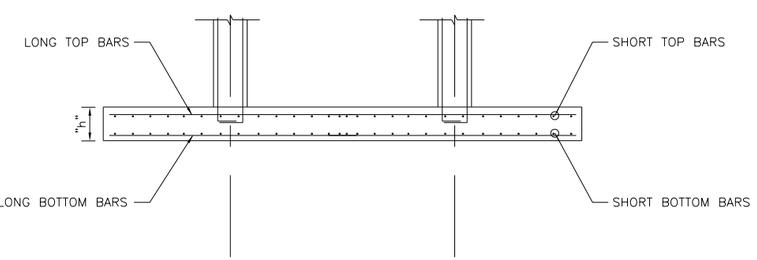

C SECTION
01-S-504 SCALE: 1:50

FOOTING NO	B (MM)	L (MM)	H (MM)	LONG TOP BARS	SHORT TOP BARS	LONG BOTTOM BARS	SHORT BOTTOM BARS	TYPE	DETAIL
F1	3210	3210	305	N19@450 mm	N19@450 mm	N19@300 mm	N19@380 mm	1	N/A
F2	3660	3660	305	N19@450 mm	N19@450 mm	N19@300 mm	N19@380 mm	1	N/A
F3	3100	7440	305	N19@225mm	N19@430 mm	N19@175 mm	N19@400 mm	2	C/01-S-505
F4	2750	7110	305	N19@250mm	N19@430 mm	N19@400 mm	N19@380 mm	2	D/01-S-505
F5	2640	20510	410	N32@200mm	N19@350 mm	N32@150 mm	N19@300 mm	2	
F6	3660	3660	410	N29@150mm	N19@350 mm	N32@200 mm	N19@300 mm	2	
F7	2340	7260	660	N29@150mm	N19@200 mm	N19@170 mm	N19@150 mm	2	
F8	2080	7030	660	N32@170mm	N19@200 mm	N22@250 mm	N19@150 mm	2	
F9	3660	3660	500	N32@150 mm	N19@200 mm	N29@300 mm	N19@150 mm	2	
F10	3210	3210	500	N32@150 mm	N19@200 mm	N29@300 mm	N19@150 mm	2	
F11	3100	7440	500	N32@150 mm	N19@200 mm	N29@300 mm	N19@150 mm	2	

NOTES:
1. FOR TYPE 1 FOOTING, SEE PLAN 1 & SECTION A ON 01-S-504.
2. FOR TYPE 2 FOOTING, SEE PLAN 2 & SECTION B ON 01-S-504.

REV	DATE	BY	SUB/APP	DESCRIPTION
0	06/30/10			SITE ADAPT CONSTRUCTION PLANS

DESIGNED A. KOSTAL
DRAWN M. LORENZ
CHECKED M. GARVER
IN CHARGE D. WHEELER
DATE 30 JUNE 2010

AFGHAN NATIONAL SECURITY FORCE
COMPREHENSIVE PLAN FOR FACILITIES DEVELOPMENT

MINISTRY OF INTERIOR (MoI) – AFGHAN NATIONAL POLICE
PROVINCIAL FIRE STATION – TYPE-B

FIRE STATION COMBINED FOOTING DETAILS 1 OF 3

SCALE AS SHOWN

PROJECT NO. 6151-08-0328

01-S-504

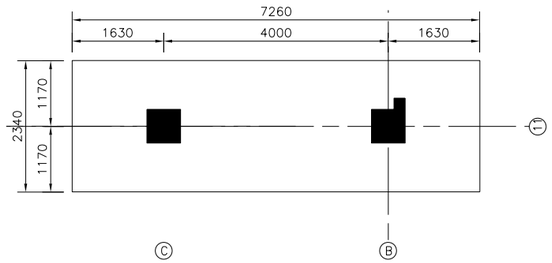

A	COMBINED FOOTING F-3
01-S-505	SCALE: NTS

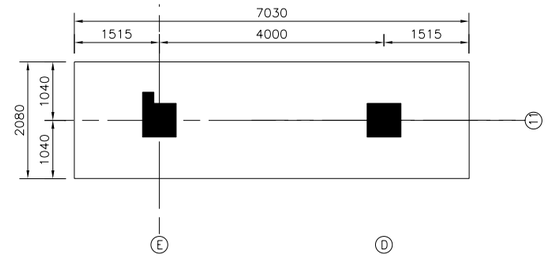

B	COMBINED FOOTING F4
01-S-505	SCALE: NTS

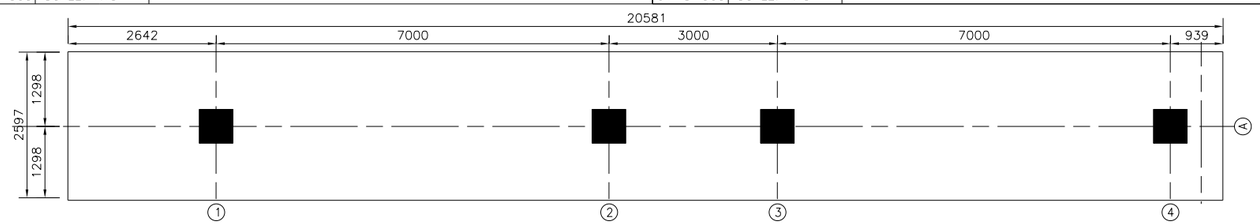

C	COMBINED FOOTING F5
01-S-505	SCALE: NTS

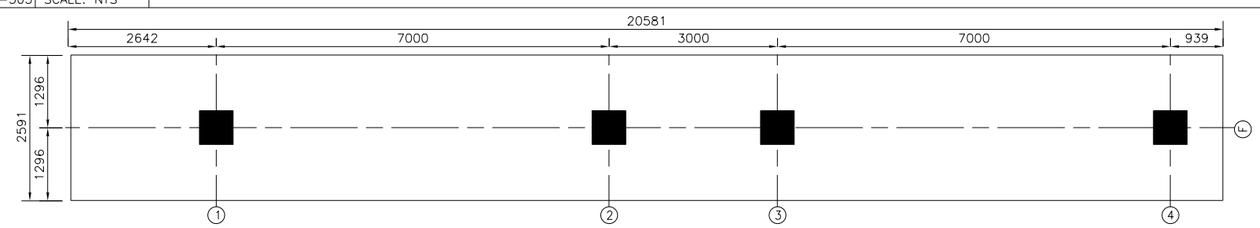

D	COMBINED FOOTING F6
01-S-505	SCALE: NTS

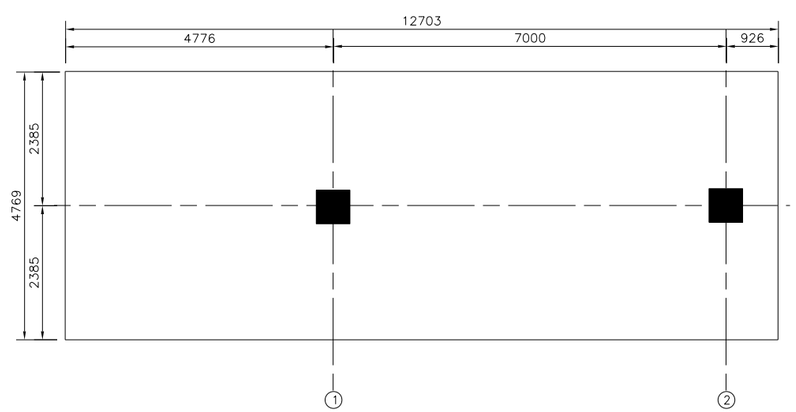

E	COMBINED FOOTING F7
01-S-505	SCALE: NTS

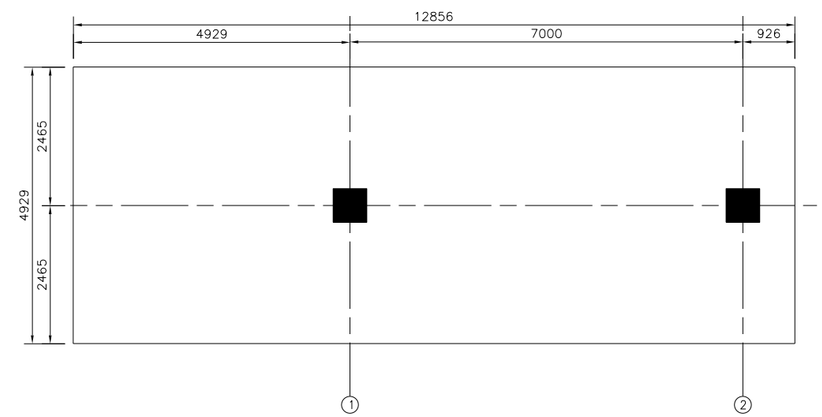

F	COMBINED FOOTING F8
01-S-505	SCALE: NTS

REV	DATE	BY	SUB	APP	DESCRIPTION
0	06/30/10				SITE ADAPT CONSTRUCTION PLANS

DESIGNED A. KHOTAL
DRAWN M. LORENZ
CHECKED M. GARVER
IN CHARGE D. WHEELER
DATE 30 JUNE 2010

AFGHAN NATIONAL SECURITY FORCE
COMPREHENSIVE PLAN FOR FACILITIES DEVELOPMENT

MINISTRY OF INTERIOR (MoI) – AFGHAN NATIONAL POLICE
PROVINCIAL FIRE STATION – TYPE-B

FIRE STATION COMBINED FOOTING DETAILS 2 OF 3

SCALE AS SHOWN

PROJECT NO. 6151-08-0328

01-S-505

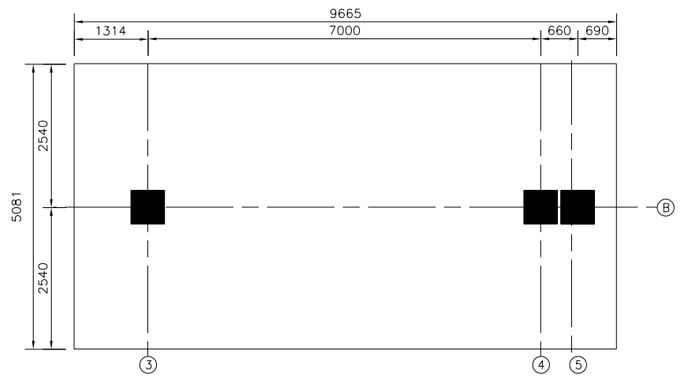

A COMBINED FOOTING F9

01-S-506 SCALE: NTS

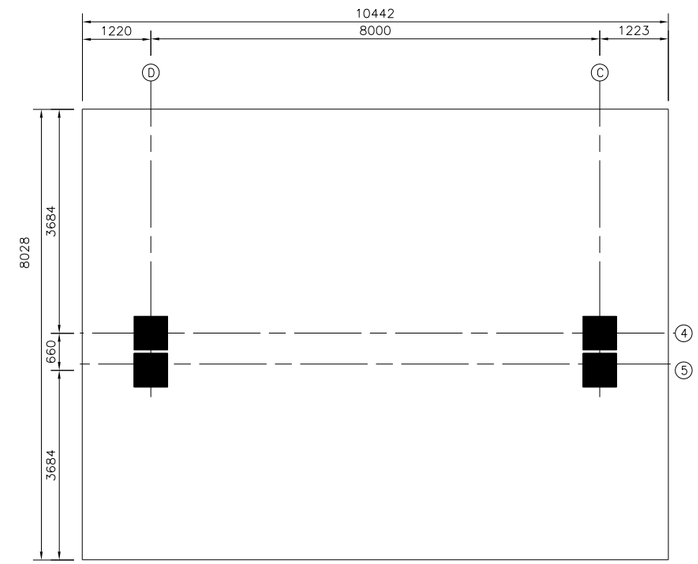

B COMBINED FOOTING F10

01-S-506 SCALE: NTS

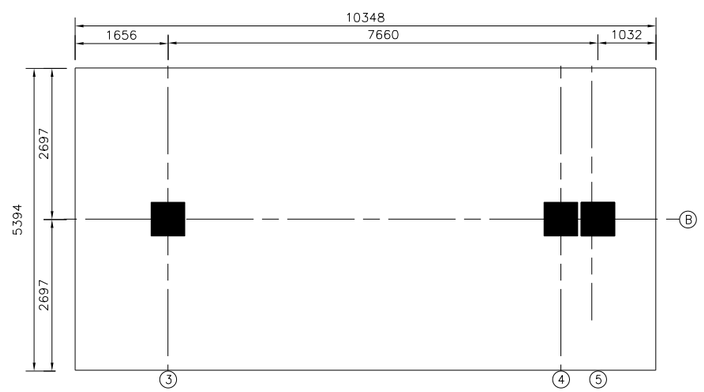

C COMBINED FOOTING F11

01-S-506 SCALE: NTS

REV	DATE	BY	SUB'APP	DESCRIPTION
0	06/30/10			SITE ADAPT CONSTRUCTION PLANS

DESIGNED A. KOITAL
DRAWN M. LORENZ
CHECKED M. GARVER
IN CHARGE D. WHEELER
DATE 30 JUNE 2010

AFGHAN NATIONAL SECURITY FORCE
COMPREHENSIVE PLAN FOR FACILITIES DEVELOPMENT

MINISTRY OF INTERIOR (MoI) – AFGHAN NATIONAL POLICE
PROVINCIAL FIRE STATION – TYPE-B

FIRE STATION COMBINED FOOTING DETAILS 3 OF 3

SCALE AS SHOWN

PROJECT NO. 6151-08-0328

01-S-506

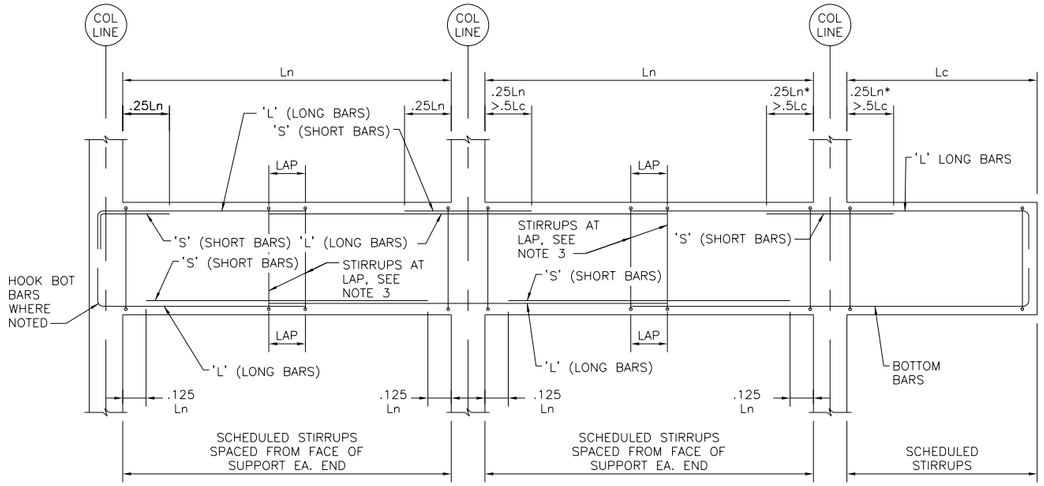

NOTES:
1. Ln* INDICATES GREATER OF TWO ADJACENT SPANS
2. FOR BAR LAPS SEE 3/00-S-501
3. MAX SPACING OF STIRRUPS @ LAP SHALL BE 10MM O.C.

1 TYPICAL CONCRETE BEAM DIAGRAM
01-S-601 SCALE: NTS

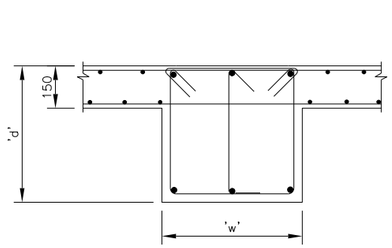

2 TYP 2ND FLOOR JOIST DTL
01-S-601 SCALE: 1:10

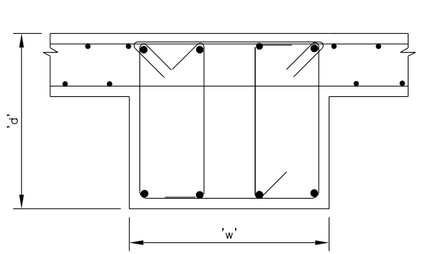

3 TYP 2ND FLOOR BEAM DTL
01-S-601 SCALE: NTS

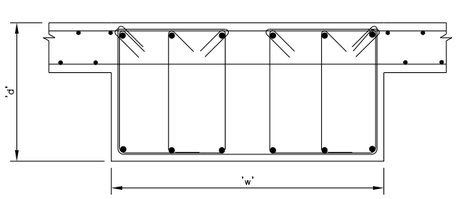

4 TYPICAL ROOF BEAM DETAIL
01-S-601 SCALE: NTS

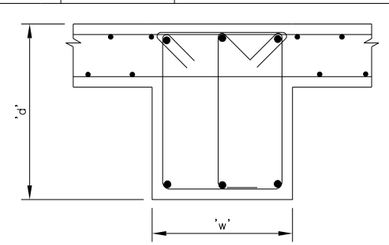

5 TYPICAL ROOF JOIST DETAIL
01-S-601 SCALE NONE

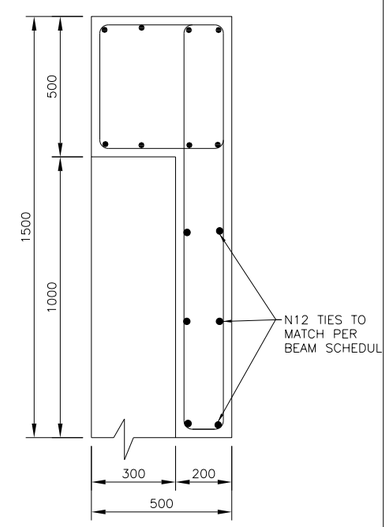

6 VEHICLE BAY ROOF BEAM DETAIL
01-S-601 SCALE NONE

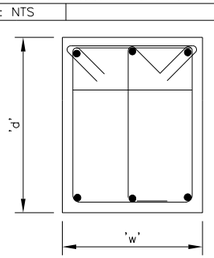

7 TRUCK BAY BEAM DTL
01-S-601 SCALE NONE

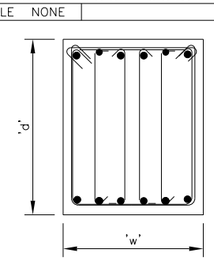

8 ALT. TRUCK BAY BEAM DTL.
01-S-601 SCALE: 1:10

BEAM MARK	BEAM SIZE WIDTH (MM)	BEAM SIZE DEPTH (MM)	REINFORCING BOTTOM BARS	REINFORCING TOP LEFT BARS	REINFORCING TOP RIGHT BARS	STIRRUPS SIZE	STIRRUPS DETAIL	STIRRUPS SPACING EACH END (MM)	REMARKS
B1	800	600	3-N26L	3-N26S	3-N26L	N12	3/01-S-601	L@30;R@200	-
B2	800	600	3-N26L	-	3-N26L	N12	3/01-S-601	L@30;R@200	-
B3	800	600	3-N26L	3-N26S	3-N26L	N12	3/01-S-601	L@30;R@200	-
B4	800	600	3-N26L	3-N26L	-	N12	3/01-S-601	L@30;R@200	-
B5	800	600	4-N26L	4-N26L	4-N26S	N12	3/01-S-601	L@30;R@200	-
B6	800	600	4-N26L	2-N26S	3-N26L	N12	4/01-S-601	L@30;R@200	-
B7	800	600	4-N26L	4-N26S	4-N26S	N12	3/01-S-601	L@30;R@200	-
B8	800	600	4-N26L	2-N26S 6-N26L	5-N26L	N12	3/01-S-601	L@30;R@200	-
B9	800	600	3-N26L	3-N26L	3-N26L	N12	4/01-S-601	L@30;R@200	-
B10	800	600	3-N26L	-	3-N26L	N12	4/01-S-601	L@30;R@200	-
B11	800	600	3-N26L	3-N26S	3-N26L	N12	4/01-S-601	L@30;R@200	-
B12	800	600	3-N26L	-	3-N26L	N12	3/01-S-601	L@30;R@200	-
B13	800	600	3-N26L	-	3N26S	N12	3/01-S-601	L@30;R@200	-
B14	800	600	3-N26L	3-N26L	3-N26S	N12	3/01-S-601	@30;R@200	-
B15	800	600	3-N26L	3-N26L	3-N26S	N12	3/01-S-601	@30;R@200	-
B16	800	600	3-N26L	3-N26L	3-N26L	N12	3/01-S-601	@30;R@200	-
B17	800	600	3-N26S	-	3-N26L	N12	3/01-S-601	@30;R@200	-
B18	800	600	3-N26S 3-N26L	3-N26S 3-N26L	3-N26S	N12	3/01-S-601	@30;R@200	-
B19	800	600	3-N26S 3-N26L	3-N26L	3-N26S	N12	3/01-S-601	@30;R@200	-
B20	800	600	3-N26L	3-N26L	3-N26S	N12	3/01-S-601	@30;R@200	-
B21	800	600	3-N26L	3-N26L	3-N26S	N12	3/01-S-601	@30;R@200	-
B22	800	600	3-N26L	-	3-N26L	N12	3/01-S-601	@30;R@200	-
B23	800	600	3-N26L	3-N26L	3-N26S	N12	3/01-S-601	@30;R@200	-
B24	800	600	3-N26L	3-N26L	3-N26S	N12	3/01-S-601	@30;R@200	-
B25	800	600	3-N26L 3-N26S	3-N26L	-	N12	3/01-S-601	@30;R@200	-
B26	800	600	3-N26L 3-N26S	-	3-N26L	N12	3/01-S-601	@30;R@200	-
B27	800	600	3-N26L	3-N26L	1-N26S	N12	3/01-S-601	@30;R@200	-
B28	800	600	3-N26L	3-N26S	3-N26S	N12	3/01-S-601	@30;R@200	-
FB1	600	1500	4-N19L	4-N19L	4-N19L	N12	3/01-S-601	@30;R@200	-
FB2	600	1500	3-N19L	3-N19L	3-N19S	N12	3/01-S-601	@30;R@200	-
FB3	600	1500	4-N19L	4-N19L	4-N19L	N12	2/01-S-601	@30;R@200	-
FB4	600	500	6-N19L	6-N19L	6-N19L	N12	6/01-S-602	@30;R@200	-
FB5	600	500	4-N19L	4-N19S	4-N19S	N12	6/01-S-602	@30;R@200	-
FB6	600	500	6-N19L	6-N19L	6-N19L	N12	6/01-S-602	@30;R@200	-
FB7	600	500	3-N19L	3-N19S	3-N19L	N12	8/01-S-602	@30;R@200	-
FB8	600	500	3-N19L	3-N19S	3-N19S	N12	8/01-S-602	@30;R@200	-
FB9	600	500	3-N19L	-	3-N19S	N12	7/01-S-602	@30;R@200	-

REV	DATE	BY	SUB'APP	DESCRIPTION
0	06/30/10			SITE ADAPT CONSTRUCTION PLANS

DESIGNED A. KAKOTAL
DRAWN M. LORENZ
CHECKED M. GARVER
IN CHARGE D. WHEELER
DATE 30 JUNE 2010

AFGHAN NATIONAL SECURITY FORCE
COMPREHENSIVE PLAN FOR FACILITIES DEVELOPMENT

MINISTRY OF INTERIOR (MoI) - AFGHAN NATIONAL POLICE
PROVINCIAL FIRE STATION - TYPE-B

FIRE STATION CONCRETE BEAM & JOIST REINFORCEMENT SCHEDULE

SCALE AS SHOWN

PROJECT NO. 6151-08-0328

01-S-601

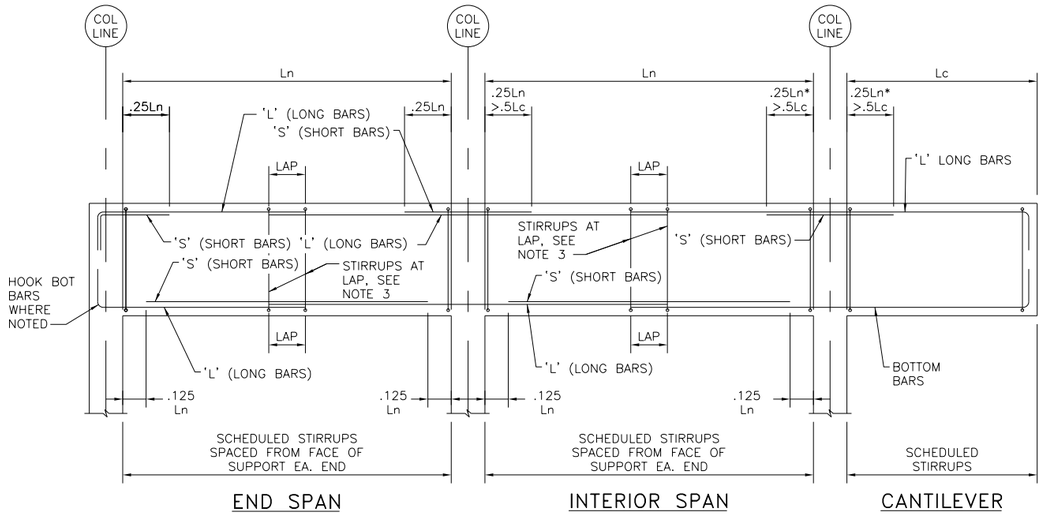

NOTES:
1. Ln* INDICATES GREATER OF TWO ADJACENT SPANS
2. FOR BAR LAPS SEE 3/00-S-501
3. MAX SPACING OF STIRRUPS @ LAP SHALL BE 10MM O.C.

1 TYPICAL CONCRETE ROOF BEAM DIAGRAM
01-S-602 SCALE: NTS

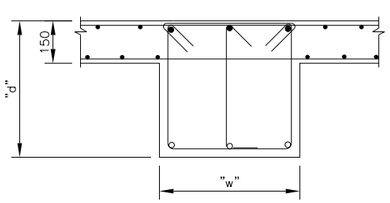

2 TYP 2ND FLOOR JOIST DTL
01-S-602 SCALE: 1:10

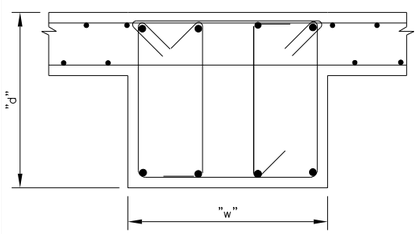

3 TYP 2ND FLOOR BEAM DTL
01-S-602 SCALE: NTS

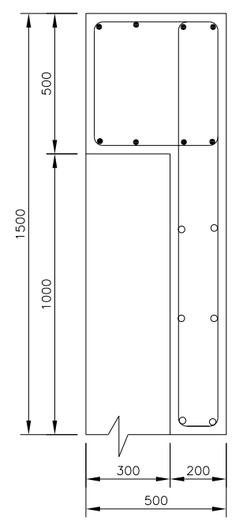

6 VEHICLE BAY ROOF BEAM DETAIL
01-S-602 SCALE NONE

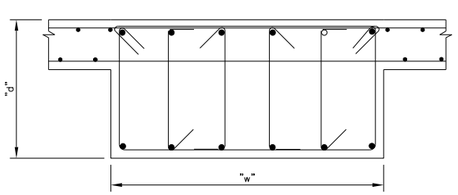

4 TYPICAL ROOF BEAM DETAIL
01-S-602 SCALE: NTS

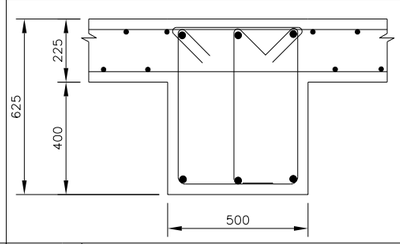

5 TYPICAL ROOF JOIST DETAIL
01-S-602 SCALE NONE

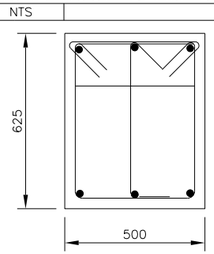

7 TRUCK BAY BEAM DTL
01-S-602 SCALE NONE

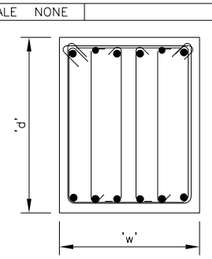

8 ALT. TRUCK BAY BEAM DTL.
01-S-602 SCALE: 1:10

CONCRETE BEAM SCHEDULE

BEAM MARK	BEAM SIZE		REINFORCING			STIRRUPS			REMARKS
	WIDTH (MM)	DEPTH (MM)	BOTTOM BARS	TOP LEFT BARS	TOP RIGHT BARS	SIZE	DETAIL	SPACING EACH END (MM)	
RB1	800	600	4-N26L	4-N26L	3-N26S	N123	01-S-601	L@30; R@200	
RB2	800	600	3-N26S	3-N26L	3-N26L	N123	01-S-601	L@30; R@200	
RB3	800	600	3-N26L	-	3-N26S	N123	01-S-601	L@30; R@200	
RB4	800	600	2-N26S 4-N26L	2-N26S 4-N26L	4-N26S	N123	01-S-601	L@30; R@200	
RB5	800	600	6-N26L	2-N26S 4-N26L	4-N26S	N123	01-S-601	L@30; R@200	
RB6	800	600	6-N26L	2-N26S	6-N26L	N124	01-S-601	L@30; R@200	
RB7	800	600	2-N26S 4-N26L	2-N26S 4-N26L	4-N26S	N123	01-S-601	L@30; R@200	
RB8	800	600	6-N26L	2-N26S	2-N26S	N123	01-S-601	L@30; R@200	
RB9	800	600	5-N26L	4-N26L	4-N26S	N124	01-S-601	L@30; R@200	
RB10	800	600	5-N26L	-	4-N26L	N124	01-S-601	L@30; R@200	
RB11	800	600	4-N26L	3-N26S	3-N26S	N124	01-S-601	L@30; R@200	
RB12	800	600	-	3-N26L	-	N123	01-S-601	L@30; R@200	
RB13	800	600	3-N26L	3-N26S	3-N26S	N123	01-S-601	L@30; R@200	
RB14	800	600	3-N26L	3-N26S	3-N26S	N123	01-S-601	L@30; R@200	
RB15	800	600	3-N26L	3-N26L	3-N26S	N123	01-S-601	L@30; R@200	
RB16	800	600	4-N26L	6-N26L	6-N26L	N123	01-S-601	L@30; R@200	
RB17	800	600	3-N26L	3-N26L	3-N26L	N123	01-S-601	L@30; R@200	
RB18	800	600	4-N26L	1-N26S	4-N26L	N123	01-S-601	L@30; R@200	
RB19	800	600	3-N26L	3-N26L	3-N26L	N123	01-S-601	L@30; R@200	
RB20	800	600	3-N26L	-	3-N26S	N123	01-S-601	L@30; R@200	
RB21	800	600	3-N26L	-	3-N26S	N123	01-S-601	L@30; R@200	
RB22	800	600	3-N26L	-	3-N26S	N123	01-S-601	L@30; R@200	
RB23	800	600	3-N26L	-	3-N26S	N123	01-S-601	L@30; R@200	
RB24	800	600	3-N26L	-	3-N26L	N123	01-S-601	L@30; R@200	
RB25	800	600	3-N26L	-	3-N26L	N123	01-S-601	L@30; R@200	
RB26	800	600	3-N26L	3-N26L	3-N26L	N123	01-S-601	L@30; R@200	
RB27	800	600	3-N26L	3-N26L	3-N26L	N123	01-S-601	L@30; R@200	
RB28	800	600	4-N26L	5-N26L	5-N26L	N123	01-S-601	L@30; R@200	
RB29	800	600	3-N26L	3-N26S	3-N26L	N123	01-S-601	L@30; R@200	

REV	DATE	BY	SUB	APP	DESCRIPTION
0	06/30/10				SITE ADAPT CONSTRUCTION PLANS

DESIGNED A. KHOTPAL
DRAWN M. LORENZ
CHECKED M. GARVER
IN CHARGE D. WHEELER
DATE 30 JUNE 2010

AFGHAN NATIONAL SECURITY FORCE
COMPREHENSIVE PLAN FOR FACILITIES DEVELOPMENT

MINISTRY OF INTERIOR (MoI) - AFGHAN NATIONAL POLICE
PROVINCIAL FIRE STATION - TYPE-B

FIRE STATION ROOF CONCRETE BEAM & JOIST REINF SCHEDULE

SCALE AS SHOWN

PROJECT NO. 6151-08-0328

01-S-602

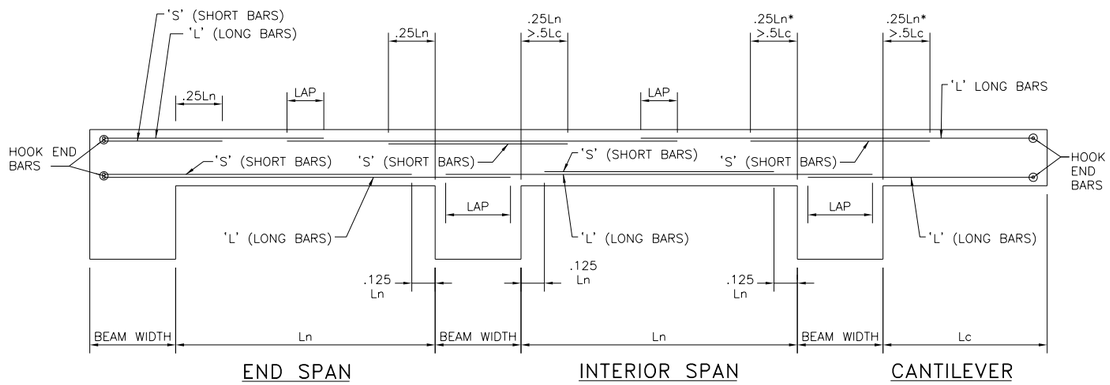

NOTES:
1. Ln* INDICATES GREATER OF TWO ADJACENT SPANS
2. FOR BAR LAPS SEE __/___

1 TYPICAL CONCRETE SLAB DIAGRAM
01-S-603 SCALE: NTS

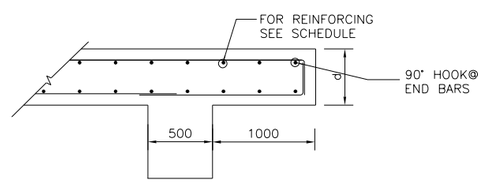

2 TYPICAL CANTILEVERED SLAB SECTION
01-S-603 SCALE: NTS

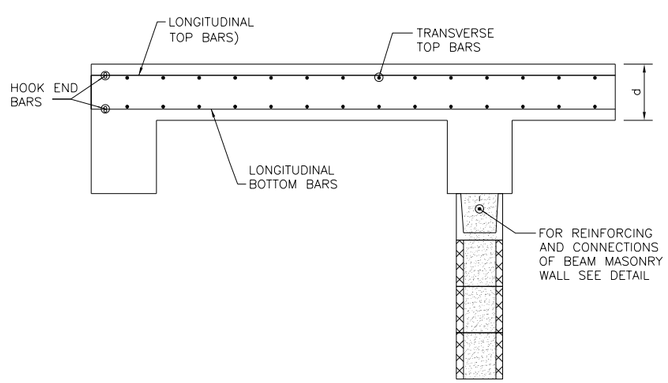

3 TYPICAL MEZZANINE SLAB SECTION
01-S-603 SCALE: NTS

SLAB NO	D(MM)	LONGITUDINAL TOP BARS	TRANSVERSE TOP BARS	LONGITUDINAL BOTTOM BARS	TRANSVERSE BOTTOM BARS
S-1	150	N16@300MM	N13@275MM	_	N13@300MM
S-2	150	N16@275MM	N13@300MM	N16@275MM	N13@300MM
S-3	150	N16@275MM	N13@300MM	N16@275MM	N13@300MM
S-4	150	N16@275MM	N13@300MM	N16@275MM	N13@300MM
S-5	150	N16@275MM	N13@300MM	N16@275MM	N13@300MM
S-6	150	N16@275MM	N13@300MM	N16@275MM	N13@300MM
S-7	150	N16@275MM	N13@300MM	N16@275MM	N13@300MM
S-8	150	N16@275MM	N13@300MM	N16@275MM	N13@300MM
S-9	150	N16@275MM	N13@300MM	N16@275MM	N13@300MM
S-10	150	N16@275MM	N13@300MM	N16@275MM	N13@300MM
S-11	150	N16@275MM	N13@300MM	N16@275MM	N13@300MM
S-12	150	N16@275MM	N13@300MM	N16@275MM	N13@300MM
S-13	150	N16@275MM	N13@300MM	N16@275MM	N13@300MM
S-14	150	N16@275MM	N13@300MM	N16@275MM	N13@300MM
S-15	150	N16@275MM	N13@300MM	N16@275MM	N13@300MM
S-16	150	N16@275MM	N13@300MM	N16@275MM	N13@300MM
S-17	150	N16@275MM	N13@300MM	N16@275MM	N13@300MM
RS-1	150	N16@175MM	N13@275MM	N16@275MM	N13@300MM
RS-2	150	N16@175MM	N13@275MM	N16@225MM	N13@300MM
RS-3	150	N16@175MM	N13@275MM	N16@250MM	N13@300MM
RS-4	150	N16@175MM	N13@275MM	N16@275MM	N13@300MM
RS-5	150	N16@300MM	N13@275MM	N16@275MM	N13@300MM
RS-6	150	N16@150MM	N13@275MM	N16@275MM	N13@300MM
RS-7	150	N16@150MM	N13@275MM	N16@225MM	N13@300MM
RS-8	150	N16@175MM	N13@275MM	N16@225MM	N13@300MM
RS-9	150	N16@175MM	N13@275MM	N16@250MM	N13@300MM
RS-10	150	N16@150MM	N13@250MM	N16@225MM	N13@300MM
RS-11	150	N16@150MM	N13@250MM	N16@275MM	N13@300MM
RS-12	150	N16@200MM	N13@275MM	N16@275MM	N13@300MM
RS-13	150	N16@200MM	N13@275MM	N16@275MM	N13@300MM
RS-14	150	N16@175MM	N13@275MM	N16@275MM	N13@300MM
RS-15	150	N16@175MM	N13@275MM	N16@275MM	N13@300MM
RS-16	150	N16@175MM	N13@275MM	N16@225MM	N13@300MM
RS-17	150	N16@275MM	N13@275MM	N16@225MM	N13@300MM

REV	DATE	BY	SUB	APP	DESCRIPTION
0	06/30/10				SITE ADAPT CONSTRUCTION PLANS

DESIGNED A. KHOTPAL
DRAWN M. LORENZ
CHECKED M. GARVER
IN CHARGE D. WHEELER
DATE 30 JUNE 2010

AFGHAN NATIONAL SECURITY FORCE
COMPREHENSIVE PLAN FOR FACILITIES DEVELOPMENT
MINISTRY OF INTERIOR (MoI) – AFGHAN NATIONAL POLICE
PROVINCIAL FIRE STATION – TYPE-B
FIRE STATION SLAB REINFORCING SCHEDULE

SCALE AS SHOWN
PROJECT NO. 6151-08-0328
01-S-603

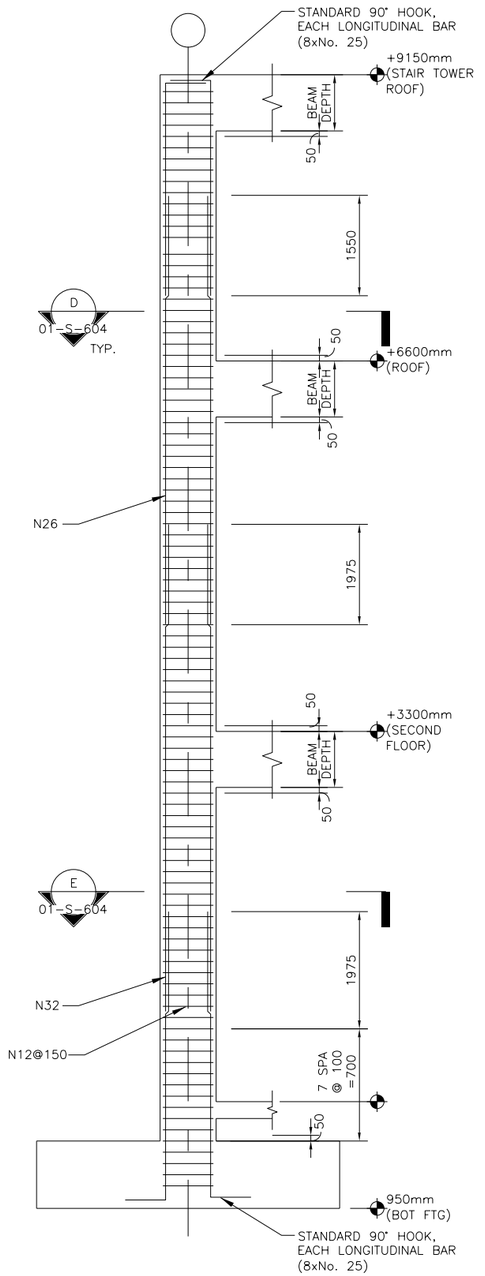

A C-3 COLUMN
01-S-604 SCALE: NTS

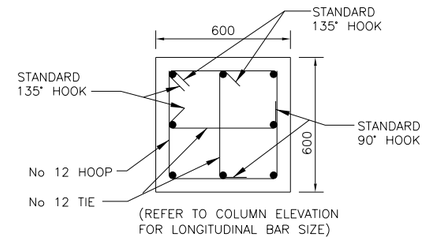

D SECTION
01-S-604 SCALE: NTS

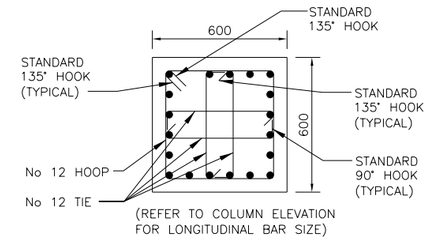

E SECTION
01-S-604 SCALE: NTS

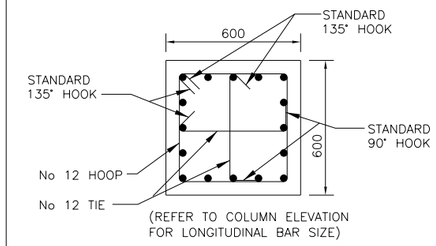

F SECTION
01-S-604 SCALE: NTS

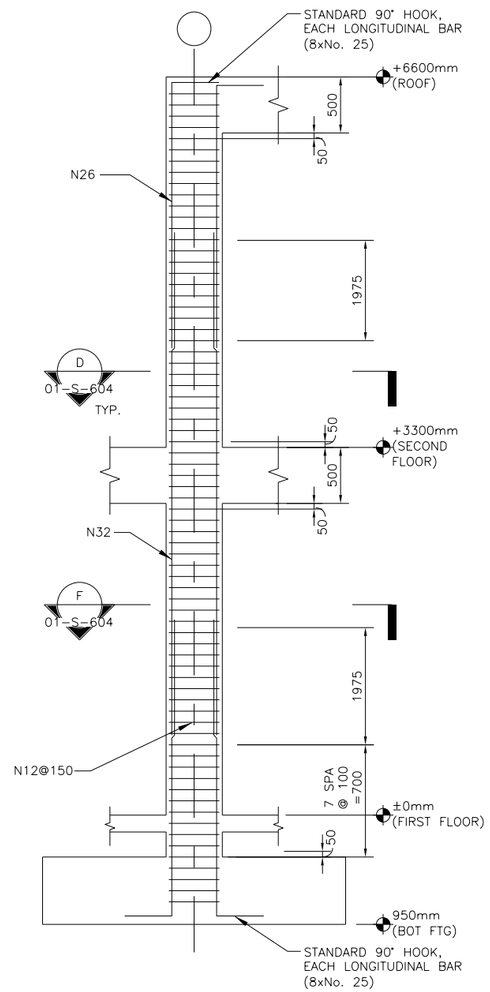

B C-2 COLUMN
01-S-604 SCALE: NTS

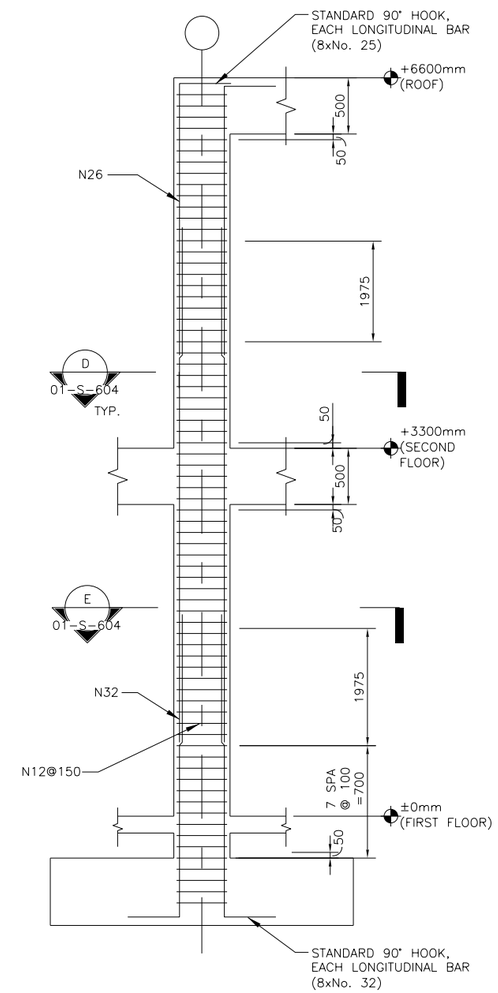

NOTES
1. SPLICES SHOWN ARE OPTIONAL
2. HOOPS AND TIES ARE No. 13 BAR THROUGHOUT
3. PROVIDE CONTINUOUS REINFORCEMENT AS SHOWN THROUGH JOINT
4. BEAM REINFORCEMENT OMITTED FOR CLARITY.

C C-1 COLUMN
01-S-604 SCALE: NTS

REV	DATE	BY	SUB	APP	DESCRIPTION
0	06/30/10				SITE ADAPT CONSTRUCTION PLANS

DESIGNED A. KHOTPAL
DRAWN M. LORENZ
CHECKED M. GARVER
IN CHARGE D. WHEELER
DATE 30 JUNE 2010

AFGHAN NATIONAL SECURITY FORCE
COMPREHENSIVE PLAN FOR FACILITIES DEVELOPMENT
MINISTRY OF INTERIOR (MoI) – AFGHAN NATIONAL POLICE
PROVINCIAL FIRE STATION – TYPE-B
FIRE STATION CONCRETE COLUMN SCHEDULE

SCALE AS SHOWN
PROJECT NO. 6151-08-0328
01-S-604

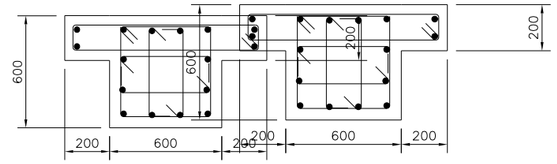

(REFER TO COLUMN ELEVATION FOR LONGITUDINAL BAR SIZE)
(HOOPS, STIRRUPS & TIES No. 12 THROUGHOUT)

A SECTION

01-S-605 | SCALE: NTS | TYPICAL TRANSVERSE COLUMN REINFORCING DETAIL

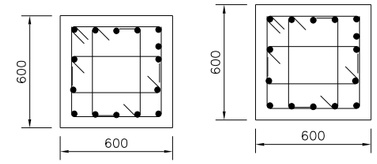

(REFER TO COLUMN ELEVATION FOR LONGITUDINAL BAR SIZE)
(HOOPS, STIRRUPS & TIES No. 12 THROUGHOUT)

B SECTION

01-S-605 | SCALE: NTS | TYPICAL TRANSVERSE COLUMN REINFORCING DETAIL

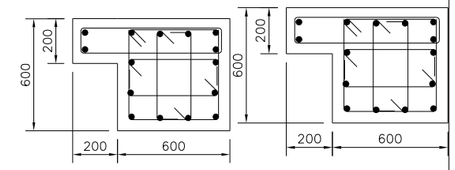

(REFER TO COLUMN ELEVATION FOR LONGITUDINAL BAR SIZE)
(HOOPS, STIRRUPS & TIES No. 12 THROUGHOUT)

C SECTION

01-S-605 | SCALE: NTS | TYPICAL TRANSVERSE COLUMN REINFORCING DETAIL

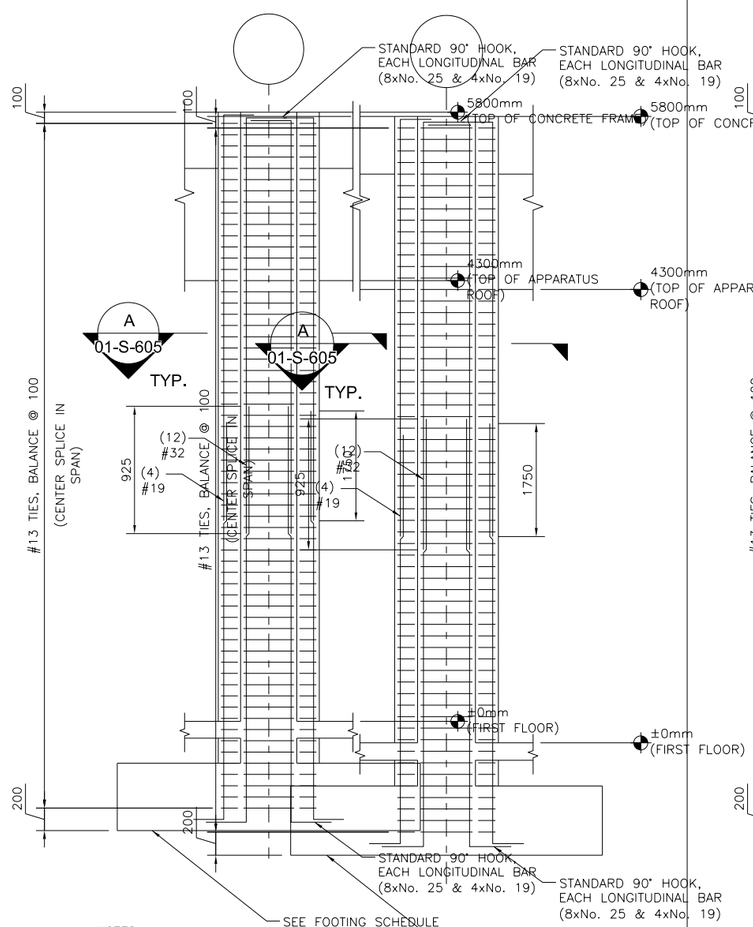

NOTES
1. SPLICES SHOWN ARE CLASS "B" TENSION SPLICES
2. HOOPS AND TIES ARE No. 12 BAR THROUGHOUT
3. PROVIDE CONTINUOUS REINFORCEMENT AS SHOWN THROUGH JOINT
4. BEAM REINFORCEMENT OMITTED FOR CLARITY.

D COLUMN C-4

01-S-605 | SCALE: NTS | TYPICAL VEHICLE BAY COLUMN REINFORCING DETAIL

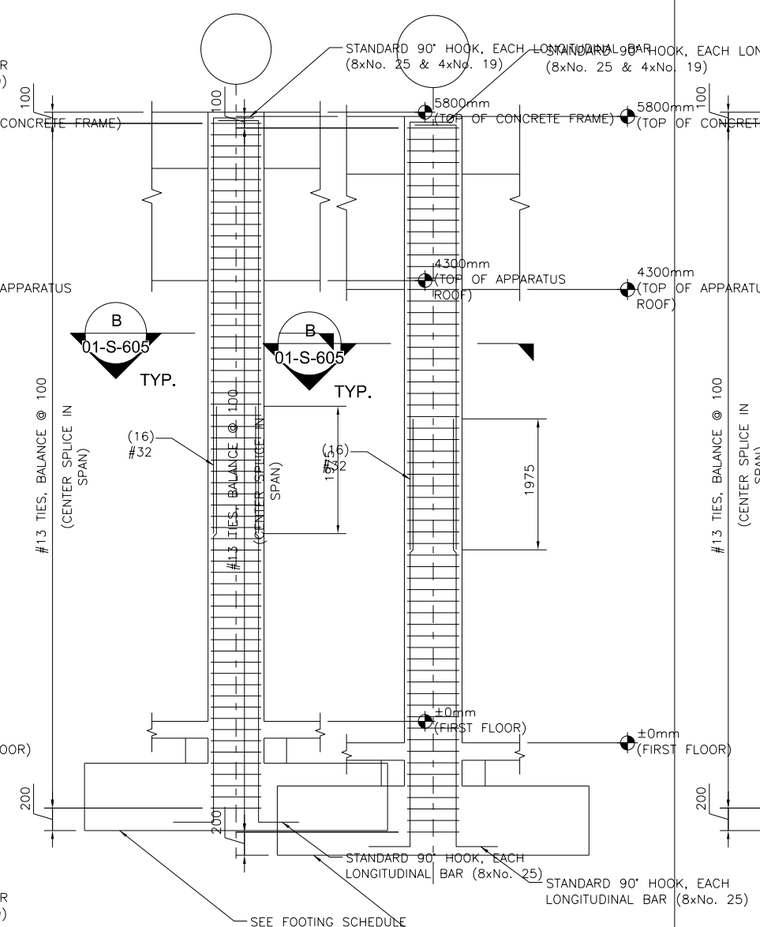

MARK
G2, G5, M2, M5, B7, B12, E7, E12

E COLUMN C-6

01-S-605 | SCALE: NTS | TYPICAL VEHICLE BAY COLUMN REINFORCING DETAIL

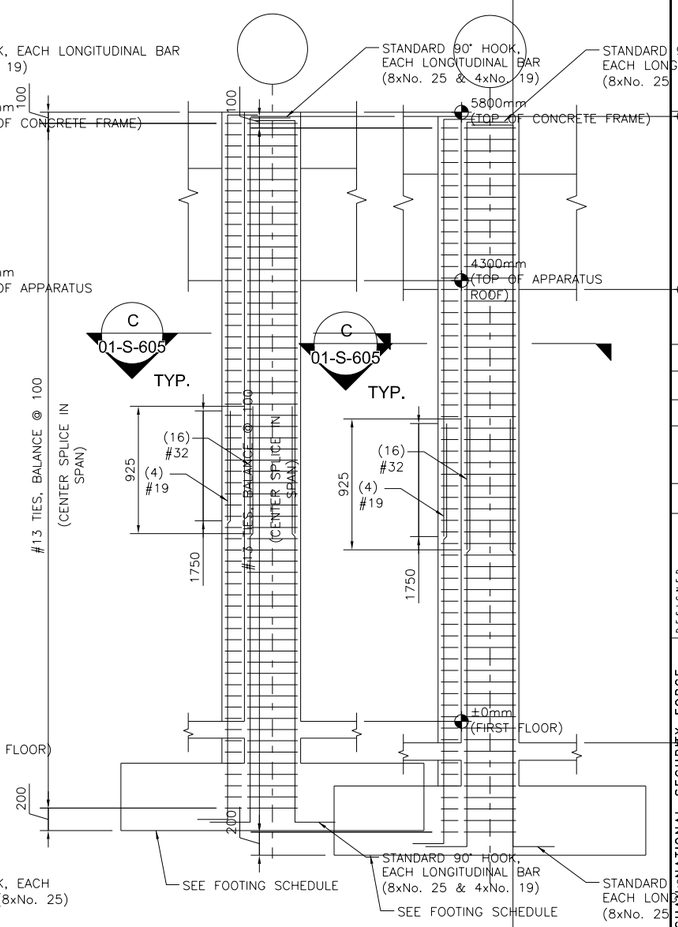

MARK
G2, G5, M2, M5, B7, B12, E7, E12

F COLUMN C-5

01-S-605 | SCALE: NTS | TYPICAL VEHICLE BAY COLUMN REINFORCING DETAIL

REV	DATE	BY	SUB'APP	DESCRIPTION
0	06/30/10			SITE ADAPT CONSTRUCTION PLANS

DESIGNED A. KHOTAL
DRAWN M. LORENZ
CHECKED M. GARVER
IN CHARGE D. WHEELER
DATE 30 JUNE 2010

AFGHAN NATIONAL SECURITY FORCE
COMPREHENSIVE PLAN FOR FACILITIES DEVELOPMENT
MINISTRY OF INTERIOR (MoI) – AFGHAN NATIONAL POLICE
PROVINCIAL FIRE STATION – TYPE-B
FIRE STATION COLUMN SCHEDULE

SCALE AS SHOWN
PROJECT NO. 6151-08-0328

01-S-605