GENERAL NOTES:

1. SEE SHEET 00-M-001 FOR GENERAL NOTES, LEGEND, AND ABBREVIATIONS.
2. TOP OF DUCTWORK TO BE MOUNTED FLUSH WITH STRUCTURAL STEEL.
3. UNIT HEATERS TO BE MOUNTED TO CONCRETE DECK IN MAIN FIREHOUSE AREAS, AND AT 3m ABOVE FINISHED FLOOR IN BAYS.
4. ALL DUCTWORK, EQUIPMENT, APPURTENANCES, AND ACCESSORIES TO BE MOUNTED WITH SEISMIC RESTRAINTS IN ACCORDANCE WITH SITE-ADAPTED CONDITIONS AND PER MANUFACTURER'S RECOMMENDATIONS.
5. RANGE HOOD TO BE FIELD FABRICATED FROM 16 GAGE STAINLESS STEEL. HOOD TO EXTEND BEYOND COOKING SURFACE BY 150mm ON ALL SIDES. HOOD CONNECTION SHOULD BE ROUTED THROUGH EXTERIOR WALL AND CONNECT TO WALL MOUNTED, GREASE RATED, EXHAUST FAN.

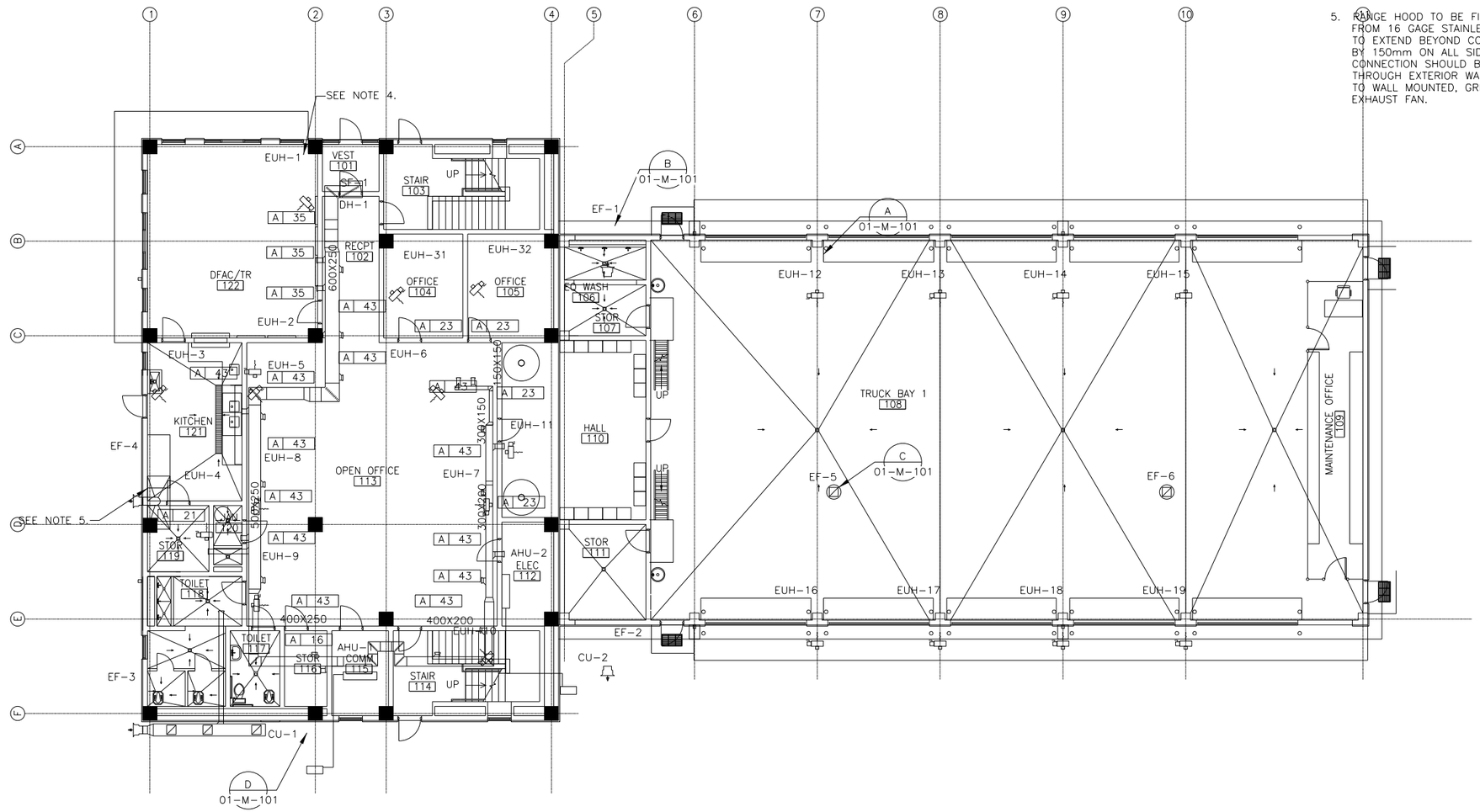

REV	DATE	BY	SUB	APP	DESCRIPTION
0	06/30/10				SITE ADAPT CONSTRUCTION PLANS

DESIGNED M. FISCHER
DRAWN C. JUNG
CHECKED J. MARIANETTI
IN CHARGE D. WHEELER
DATE 30 JUNE 2010

AFGHAN NATIONAL SECURITY FORCE
COMPREHENSIVE PLAN FOR FACILITIES DEVELOPMENT

MINISTRY OF INTERIOR (MoI) – AFGHAN NATIONAL POLICE
PROVINCIAL FIRE STATION – TYPE-B

FIRE STATION FIRST FLOOR MECHANICAL HVAC PLAN

SCALE AS SHOWN

PROJECT NO. 6151-08-0328

01-M-101

GENERAL NOTES:

1. SEE SHEET 00-M-001 FOR GENERAL NOTES, LEGEND, AND ABBREVIATIONS.
2. TOP OF DUCTWORK TO BE MOUNTED FLUSH WITH STRUCTURAL STEEL.
3. UNIT HEATERS TO BE MOUNTED TO CONCRETE DECK IN MAIN FIREHOUSE AREAS, AND AT 3m ABOVE FINISHED FLOOR IN BAYS.
4. ALL DUCTWORK, EQUIPMENT, APPURTENANCES, AND ACCESSORIES TO BE MOUNTED WITH SEISMIC RESTRAINTS IN ACCORDANCE WITH SITE-ADAPTED CONDITIONS AND PER MANUFACTURER'S RECOMMENDATIONS.

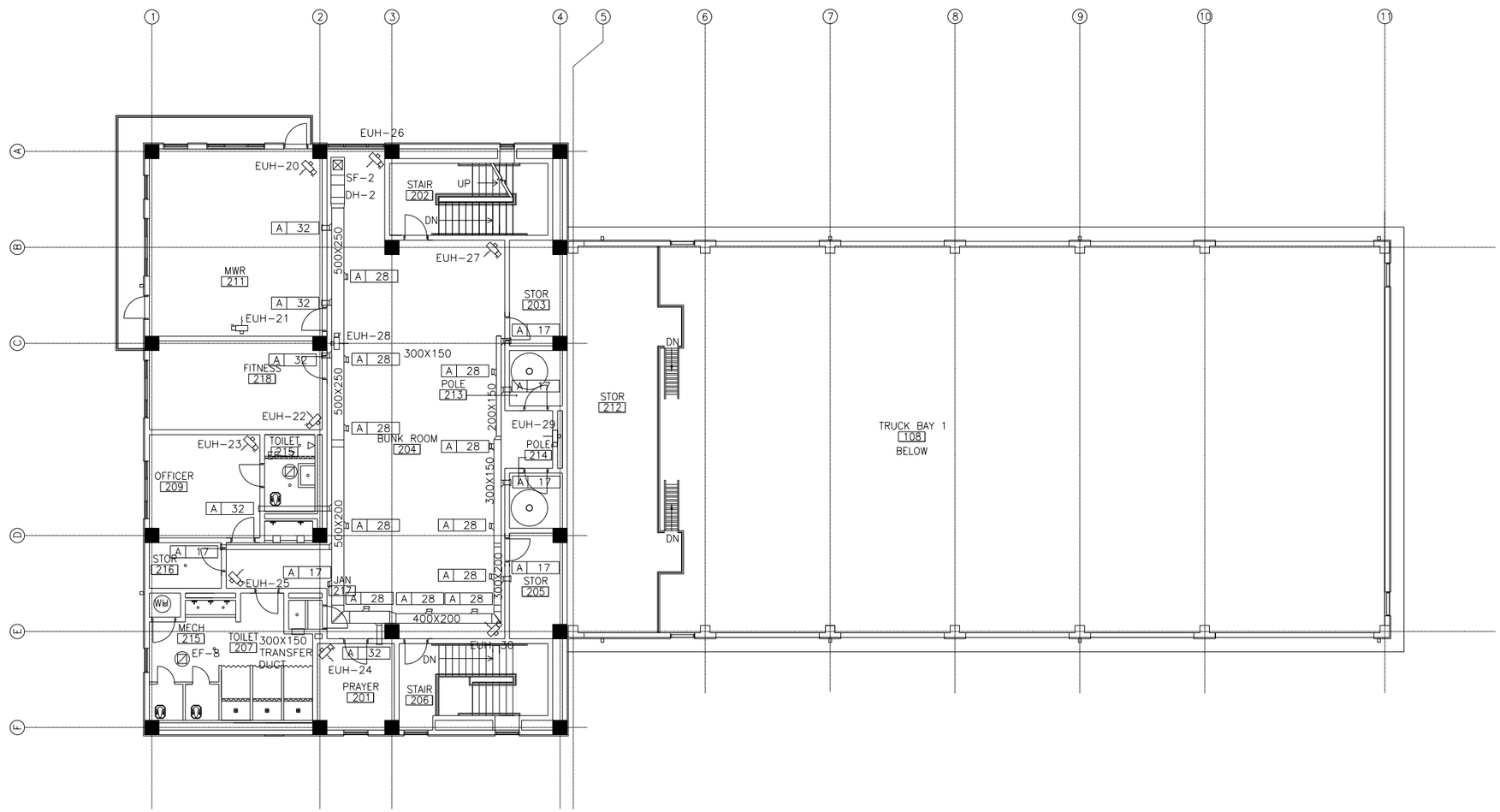

REV	DATE	BY	SUB'APP	DESCRIPTION
0	06/30/10			SITE ADAPT CONSTRUCTION PLANS

DESIGNED M. PEISHER
DRAWN C. JUNG
CHECKED J. MARIANETTI
IN CHARGE D. WHEELER
DATE 30 JUNE 2010

AFGHAN NATIONAL SECURITY FORCE
COMPREHENSIVE PLAN FOR FACILITIES DEVELOPMENT

MINISTRY OF INTERIOR (MoI) – AFGHAN NATIONAL POLICE
PROVINCIAL FIRE STATION – TYPE-B

FIRE STATION SECOND FLOOR MECHANICAL HVAC PLAN

SCALE AS SHOWN

PROJECT NO. 6151-08-0328

01-M-102

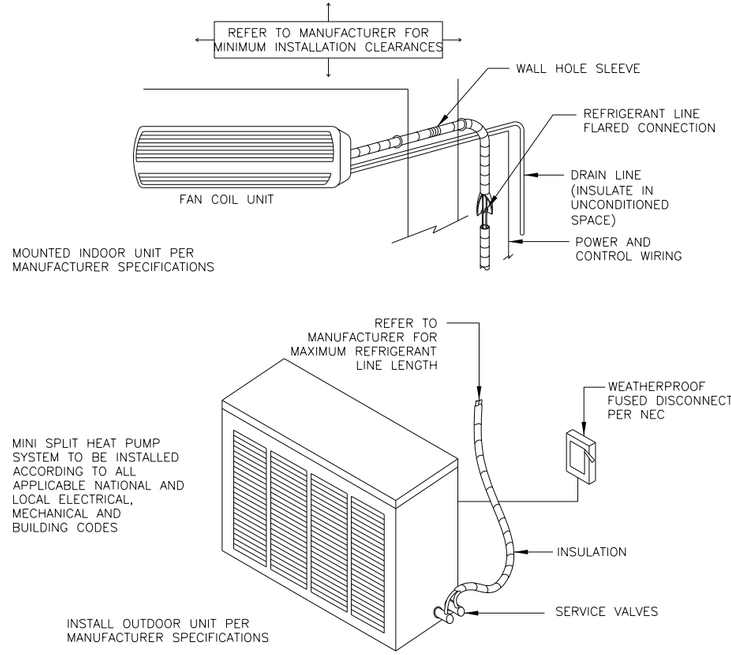

D SPLIT SYSTEM HVAC UNIT

01-M-501 N.T.S.

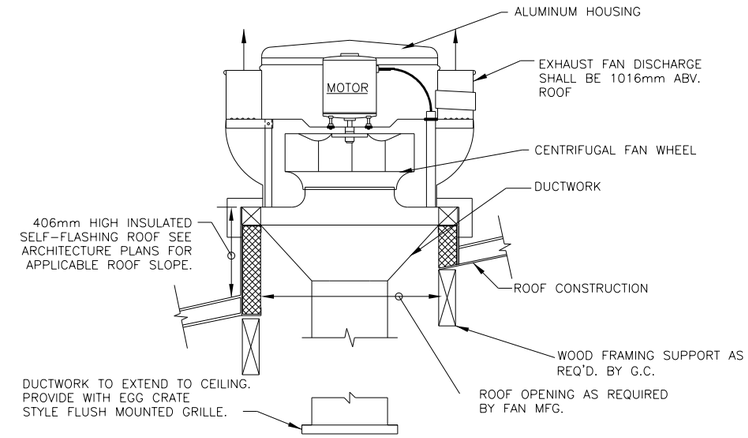

C ROOF MOUNTED EXHAUST FAN DETAIL

01-M-501 N.T.S.

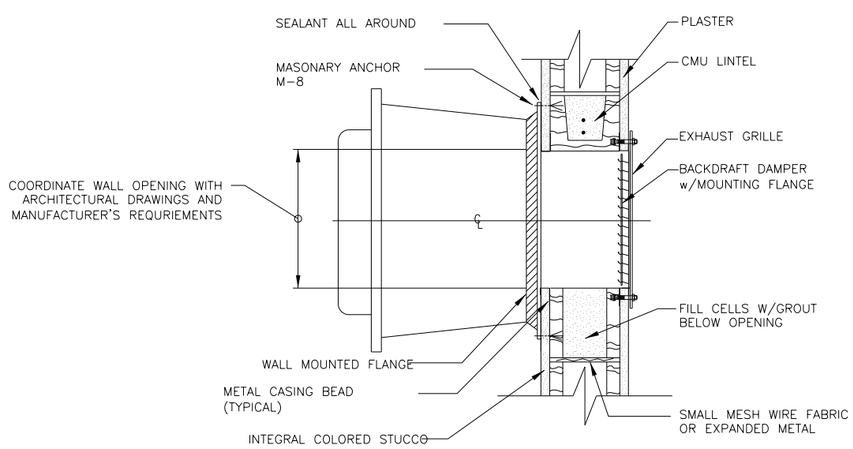

NOTES:
* GASKET MATERIAL TO BE PROVIDED TO BOTTOM OF FAN INSIDE MOUNTING ANGLES.

B WALL MOUNTED EXHAUST FAN DETAIL

01-M-501 N.T.S.

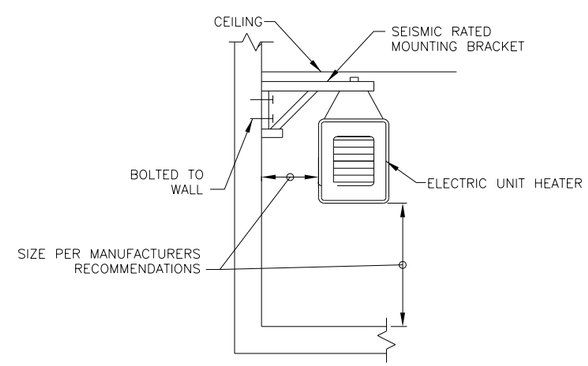

A ELECTRICAL UNIT HEATER DETAIL

01-M-501 N.T.S.

REV	DATE	BY	SUB/APP	DESCRIPTION
0	06/30/10			SITE ADAPT CONSTRUCTION PLANS

DESIGNED M. FLEISHER
DRAWN C. JUNG
CHECKED J. MARIANETTI
IN CHARGE D. WHEELER
DATE 30 JUNE 2010

AFGHAN NATIONAL SECURITY FORCE COMPREHENSIVE PLAN FOR FACILITIES DEVELOPMENT

MINISTRY OF INTERIOR (MoI) – AFGHAN NATIONAL POLICE PROVINCIAL FIRE STATION – TYPE-B

FIRE STATION MECHANICAL HVAC DETAILS

SCALE AS SHOWN

PROJECT NO. 6151-08-0328

01-M-501

FAN SCHEDULE

NO.	TYPE	VOLUME		SP (in WG)	FRPM	SIZE (HP)	V/C/P	BASIS OF DESIGN	REMARKS
		CFM	l/s						
EF-1	WALL	250	118	0.15	839	1/4	220/50/1	GREENHECK CWB-098-4	1,3,5
EF-2	WALL	250	118	0.15	839	1/4	220/50/1	GREENHECK CWB-098-4	1,3,5
EF-3	WALL	670	316	0.25	1,425	1/4	220/50/1	GREENHECK CW-098-J	1,3,5
EF-4	WALL	576	271	0.25	1,290	1/12	220/50/1	GREENHECK CW-095-L	1,3,5
EF-5	ROOF	1,250	590	0.25	1,647	1/4	220/50/1	GREENHECK GB-101-4	1,2,3,5
EF-6	ROOF	1,250	590	0.25	1,647	1/4	220/50/1	GREENHECK GB-101-4	1,2,3,5
EF-7	ROOF	175	83	0.2	1,098	1/6	220/50/1	GREENHECK GB-071-6	1,2,3,5
EF-8	ROOF	790	372	0.5	1,498	1/4	220/50/1	GREENHECK GB-091-4	1,2,3,5
SF-1	INLINE	1,604	757	0.8	1,425	3/4	380/50/3	GREENHECK SQ-140-J	1,3,5,6
SF-2	INLINE	1,224	576	0.7	1,425	1/2	380/50/3	GREENHECK SQ-130-J	1,3,5

REMARKS:
1. PROVIDE WITH UNIT MOUNTED, FACTORY INSTALLED STARTER AND DISCONNECT.
2. PROVIDE WITH ROOF CURB FROM FAN MANUFACTURER.
3. ACTIVATE WITH WALL MOUNTED SWITCH.
4. INTERLOCK WITH LIGHT SWITCH.
5. EXPLOSION PROOF NOT REQUIRED.
6. PROVIDE GREASE RATED FAN.

ELECTRIC UNIT HEATER SCHEDULE (EUH)

NO.	BASIS OF DESIGN	VOLTAGE (V)	PHASE	NOMINAL WATTAGE (Kw)	BTU/hr	TOTAL CURRENT (A)	AIR DELIVERY		AIR TEMPERATURE RISE		REMARKS
							CFM	l/s	°F	°C	
EUH-1	RUFFNECK FE1	380	3	2.5	8,550	3.8	400	189	17.9	10.0	1, 2, 3
EUH-2	RUFFNECK FE1	380	3	2.5	8,550	3.8	400	189	17.9	10.0	1, 2, 3
EUH-3	RUFFNECK FE1	380	3	8.4	28,700	12.8	400	189	30.2	16.8	1, 2, 3
EUH-4	RUFFNECK FE1	380	3	8.4	28,700	12.8	400	189	30.2	16.8	1, 2, 3
EUH-5	RUFFNECK FE1	380	3	8.4	28,700	12.8	400	189	30.2	16.8	1, 2, 3
EUH-6	RUFFNECK FE1	380	3	8.4	28,700	12.8	400	189	30.2	16.8	1, 2, 3
EUH-7	RUFFNECK FE1	380	3	8.4	28,700	12.8	400	189	30.2	16.8	1, 2, 3
EUH-8	RUFFNECK FE1	380	3	8.4	28,700	12.8	400	189	30.2	16.8	1, 2, 3
EUH-9	RUFFNECK FE1	380	3	8.4	28,700	12.8	400	189	30.2	16.8	1, 2, 3
EUH-10	RUFFNECK FE1	380	3	8.4	28,700	12.8	400	189	30.2	16.8	1, 2, 3
EUH-11	RUFFNECK FE1	380	3	6.3	21,500	9.6	400	189	27.2	15.1	1, 2, 3
EUH-12	RUFFNECK FE1	380	3	8.4	28,700	12.8	400	189	30.2	16.8	1, 2, 3
EUH-13	RUFFNECK FE1	380	3	8.4	28,700	12.8	400	189	30.2	16.8	1, 2, 3
EUH-14	RUFFNECK FE1	380	3	8.4	28,700	12.8	400	189	30.2	16.8	1, 2, 3
EUH-15	RUFFNECK FE1	380	3	8.4	28,700	12.8	400	189	30.2	16.8	1, 2, 3
EUH-16	RUFFNECK FE1	380	3	8.4	28,700	12.8	400	189	30.2	16.8	1, 2, 3
EUH-17	RUFFNECK FE1	380	3	8.4	28,700	12.8	400	189	30.2	16.8	1, 2, 3
EUH-18	RUFFNECK FE1	380	3	8.4	28,700	12.8	400	189	30.2	16.8	1, 2, 3
EUH-19	RUFFNECK FE1	380	3	8.4	28,700	12.8	400	189	30.2	16.8	1, 2, 3
EUH-20	RUFFNECK FE1	380	3	2.5	8,550	3.8	400	189	17.9	10.0	1, 2, 3
EUH-21	RUFFNECK FE1	380	3	2.5	8,550	3.8	400	189	17.9	10.0	1, 2, 3
EUH-22	RUFFNECK FE1	380	3	2.5	8,550	3.8	400	189	17.9	10.0	1, 2, 3
EUH-23	RUFFNECK FE1	380	3	2.5	8,550	3.8	400	189	17.9	10.0	1, 2, 3
EUH-24	RUFFNECK FE1	380	3	2.5	8,550	3.8	400	189	17.9	10.0	1, 2, 3
EUH-25	RUFFNECK FE1	380	3	8.4	28,700	12.8	400	189	30.2	16.8	1, 2, 3
EUH-26	RUFFNECK FE1	380	3	8.4	28,700	12.8	400	189	30.2	16.8	1, 2, 3
EUH-27	RUFFNECK FE1	380	3	8.4	28,700	12.8	400	189	30.2	16.8	1, 2, 3
EUH-28	RUFFNECK FE1	380	3	8.4	28,700	12.8	400	189	30.2	16.8	1, 2, 3
EUH-29	RUFFNECK FE1	380	3	8.4	28,700	12.8	400	189	30.2	16.8	1, 2, 3
EUH-30	RUFFNECK FE1	380	3	8.4	28,700	12.8	400	189	30.2	16.8	1, 2, 3
EUH-31	RUFFNECK FE1	380	3	2.5	8,550	3.8	400	189	17.9	10.0	1, 2, 3
EUH-32	RUFFNECK FE1	380	3	2.5	8,550	3.8	400	189	17.9	10.0	1, 2, 3

REMARKS:
1. PROVIDE WITH UNIT MOUNTED, FACTORY INSTALLED STARTER AND DISCONNECT.
2. PROVIDE WITH UNIT MOUNTED THERMOSTAT.
3. EXPLOSION PROOF NOT REQUIRED.

SPLIT SYSTEM AIR CONDITIONING UNIT SCHEDULE (S)

NO.	HEATING TYPE	HEATING CAPACITY (kW)	COOLING CAPACITY (kW)	POWER SUPPLY (V)	FREQUENCY (HZ)	POWER INPUT (W)	AIRFLOW (m^3/h)	WEIGHT IU/OU (kg)	BASIS OF DESIGN	REMARKS
AHU-1	HEAT PUMP	7.2	6.6	220	50	2400	900	15/58	CHIGO CS-66H3-N	1, 2, 3, 4, 5, 6, 7
AHU-2	HEAT PUMP	7.2	6.6	220	50	2400	900	15/58	CHIGO CS-66H3-N	1, 2, 3, 4, 5, 6, 7

REMARKS:
1. OUTDOOR AMBIENT CONDITIONS ARE 35 C, DB 20.6 IN SUMMER.
2. OUTDOOR AMBIENT TEMPERATURE IS -16 C IN WINTER.
3. PROVIDE WITH LOW AMBIENT CONTROL EQUIPMENT.
4. PROVIDE FACTORY MOUNTED DISCONNECT SWITCH.
5. PROVIDE REMOTE THERMOSTAT FOR ROOM TEMPERATURE CONTROL.
6. AHU TO BE MOUNTED ON 100mm CONCRETE PAD.
7. CONTROL WIRING FOR REMOTE THERMOSTAT BY CONTROLS CONTRACTOR.

DUCT HEATER SCHEDULE (DH)

NO.	VOLUME		MAX kW	VOLTAGE (V)	PHASE	DUCT CONNECTION SIZE	ELEMENTS	BASIS OF DESIGN	REMARKS
	CFM	l/s							
DH-1	1604	757	33	380	3	610X460 (24"X18")	10	RUFFNECK RDIF	1
DH-2	1224	577	27.5	380	3	560X460 (22"X18")	9	RUFFNECK RDIF	1

REMARKS:
1. PROVIDE WITH DUCT MOUNTED THEROMSTAT SET TO 21° C.

REV	DATE	BY	SUB	APP	DESCRIPTION
0	06/30/10				SITE ADAPT CONSTRUCTION PLANS

DESIGNED M. FLEISHER
DRAWN C. JUNG
CHECKED J. MARIANETTI
IN CHARGE D. WHEELER
DATE 30 JUNE 2010

AFGHAN NATIONAL SECURITY FORCE
COMPREHENSIVE PLAN FOR FACILITIES DEVELOPMENT

MINISTRY OF INTERIOR (MoI) - AFGHAN NATIONAL POLICE
PROVINCIAL FIRE STATION - TYPE-B

FIRE STATION MECHANICAL HVAC SCHEDULES

SCALE AS SHOWN

PROJECT NO. 6151-08-0328

01-M-601

1 FIRE STATION FIRST AND SECOND FLOOR SCHEDULES
01-M-601

NOTES:

1. BUILDING HAS MULTIPLE ORIENTATIONS ON SITE. SEE CIVIL SITE PLAN FOR WATER AND SANITARY SERVICE ENTRANCE AND EXIT LOCATIONS. DOMESTIC WATER SERVICE SHALL BE PROVIDED WITH ONE VALVE BOX AS LOCATED ON SITE PLAN.
2. ALL TOILETS SHALL BE INSTALLED IN A NORTH/SOUTH ORIENTATION.
3. ALL EASTERN-TYPE WATER CLOSETS SHALL HAVE A HOSE BIBB INSTALLED ON OCCUPANT'S RIGHT-HAND SIDE.
4. ALL PIPING SHALL BE RUN TIGHT TO CEILING. PIPING SHALL NOT BE IN WALLS WHERE POSSIBLE BUT EXPOSED AND STRAPPED TIGHT TO WALL.
5. ALL PIPING ON EXTERIOR WALLS SHALL BE INSULATED.
6. CONTRACTOR SHALL ROUTE AND SIZE ALL SUB SLAB PIPING PER SPECIFIC SITE ADAPT CONDITIONS. CONTRACTOR SHALL COORDINATE PIPING WITH ALL OTHER DISCIPLINES. SHOP DRAWINGS SHALL BE SUBMITTED FOR SLEEVE AND SEAL DETAILS AND FOOTING AND FOUNDATION PENETRATION LOCATIONS. ONCE APPROVED, FOUNDATIONS AND FOOTINGS SHALL BE CAST AROUND PIPING PENETRATIONS.

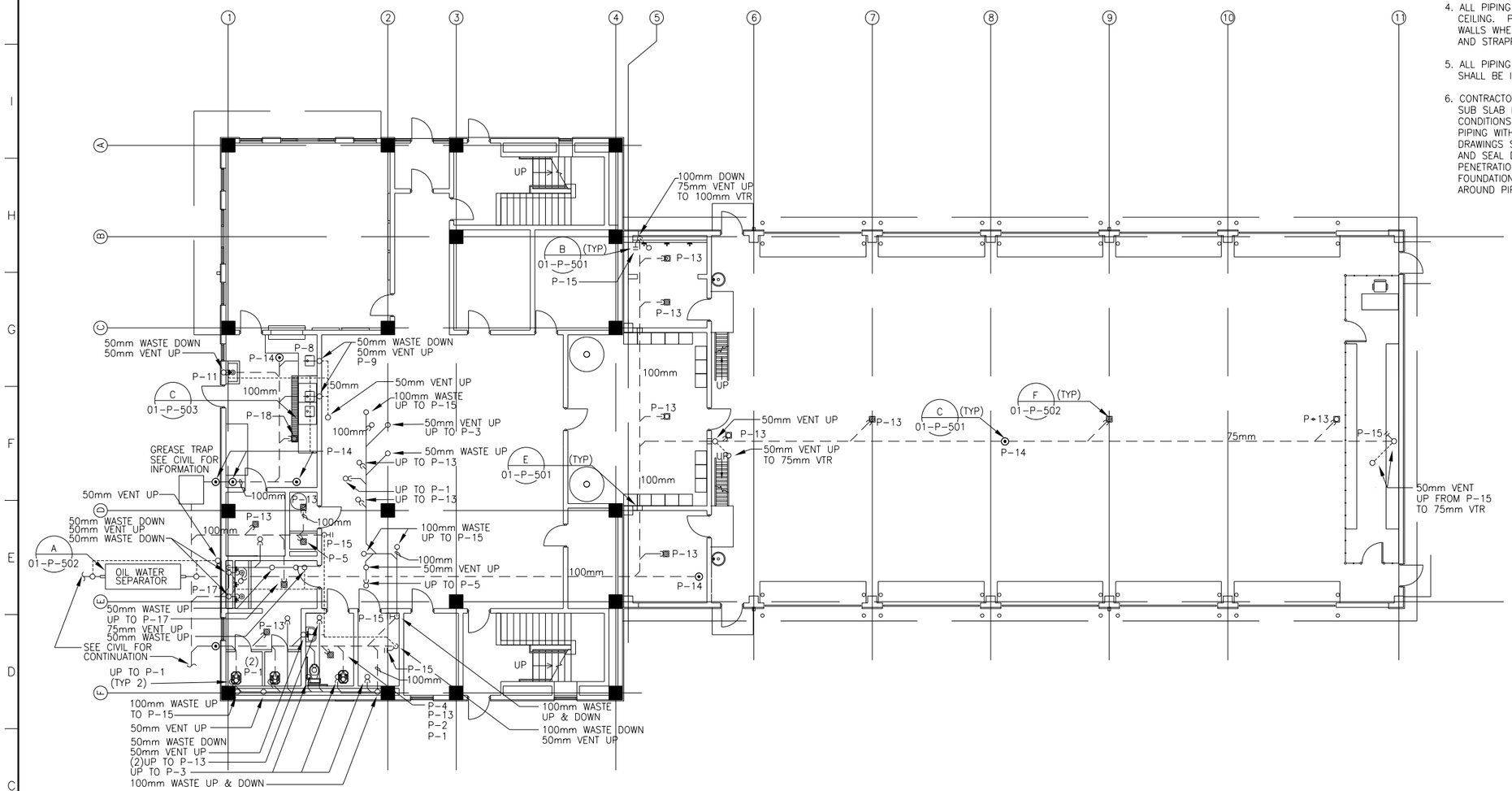

						SITE ADAPT CONSTRUCTION PLANS	DESCRIPTION
							BY SUBAPP
					0	06/30/10	DATE
							REV

DESIGNED D. HOYLE
DRAWN D. HOYLE
CHECKED J. MARIANETTI
IN CHARGE D. WHEELER
DATE 30 JUNE 2010

AFGHAN NATIONAL SECURITY FORCE
COMPREHENSIVE PLAN FOR FACILITIES DEVELOPMENT

MINISTRY OF INTERIOR (MoI) – AFGHAN NATIONAL POLICE
PROVINCIAL FIRE STATION – TYPE-B

FIRE STATION FIRST FLOOR WASTE & VENT PLUMBING PLAN

SCALE AS SHOWN

PROJECT NO. 6151-08-0328

01-P-101

1 FIRE STATION FIRST FLOOR WASTE AND VENT PLUMBING PLAN

01-P-101 SCALE 1:100

NOTES:

1. BUILDING HAS MULTIPLE ORIENTATIONS ON SITE. SEE CIVIL SITE PLAN FOR WATER AND SANITARY SERVICE ENTRANCE AND EXIT LOCATIONS. DOMESTIC WATER SERVICE SHALL BE PROVIDED WITH ONE VALVE BOX AS LOCATED ON SITE PLAN.
2. ALL TOILETS SHALL BE INSTALLED IN A NORTH/SOUTH ORIENTATION.
3. ALL EASTERN-TYPE WATER CLOSETS SHALL HAVE A HOSE BIBB INSTALLED ON OCCUPANT'S RIGHT-HAND SIDE.
4. ALL PIPING SHALL BE RUN TIGHT TO CEILING. PIPING SHALL NOT BE IN WALLS WHERE POSSIBLE BUT EXPOSED AND STRAPPED TIGHT TO WALL.
5. ALL PIPING ON EXTERIOR WALLS SHALL BE INSULATED.

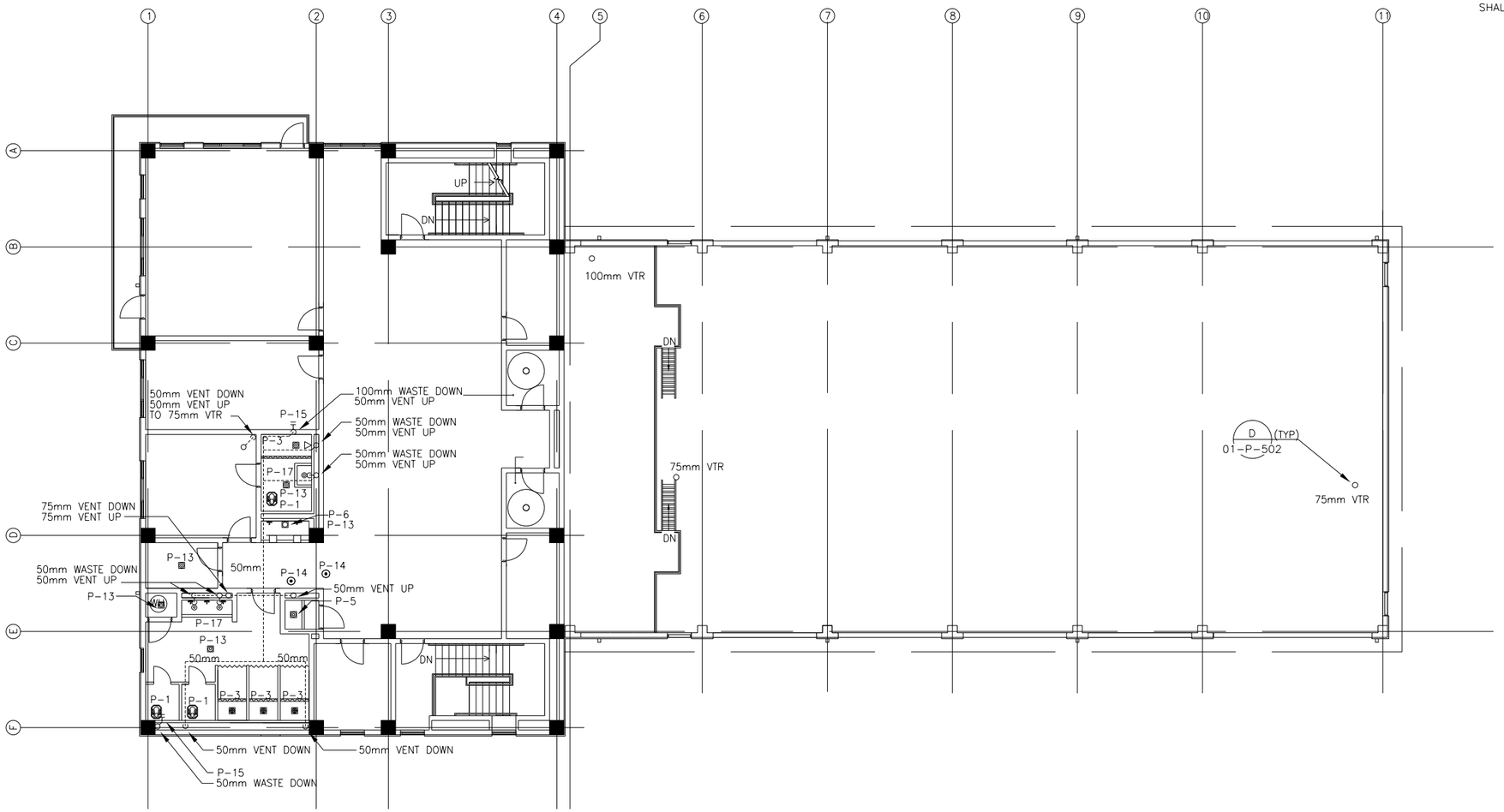

1 FIRE STATION SECOND FLOOR WASTE AND VENT PLUMBING PLAN

01-P-102 SCALE 1:100

REV	DATE	BY	SUB	APP	DESCRIPTION
0	06/30/10				SITE ADAPT CONSTRUCTION PLANS

DESIGNED D. HOYLE
DRAWN D. HOYLE
CHECKED J. MARIANETTI
IN CHARGE D. WHEELER
DATE 30 JUNE 2010

AFGHAN NATIONAL SECURITY FORCE
COMPREHENSIVE PLAN FOR FACILITIES DEVELOPMENT

MINISTRY OF INTERIOR (MoI) – AFGHAN NATIONAL POLICE
PROVINCIAL FIRE STATION – TYPE-B

FIRE STATION SECOND FLOOR WASTE & VENT PLUMBING PLAN

SCALE AS SHOWN

PROJECT NO. 6151-08-0328

01-P-102

NOTES:

1. BUILDING HAS MULTIPLE ORIENTATIONS ON SITE. SEE CIVIL SITE PLAN FOR WATER AND SANITARY SERVICE ENTRANCE AND EXIT LOCATIONS. DOMESTIC WATER SERVICE SHALL BE PROVIDED WITH ONE VALVE BOX AS LOCATED ON SITE PLAN.
2. ALL TOILETS SHALL BE INSTALLED IN A NORTH/SOUTH ORIENTATION.
3. ALL EASTERN-TYPE WATER CLOSETS SHALL HAVE A HOSE BIBB INSTALLED ON OCCUPANT'S RIGHT-HAND SIDE.
4. ALL PIPING SHALL BE RUN TIGHT TO CEILING. PIPING SHALL NOT BE IN WALLS WHERE POSSIBLE BUT EXPOSED AND STRAPPED TIGHT TO WALL.
5. ALL PIPING ON EXTERIOR WALLS SHALL BE INSULATED.
6. ¾" PROPANE SUPPLY LINE. PROVIDE WITH SHUTOFF VALVE AT 100mm ABOVE FINISHED FLOOR. PROVIDE WITH DIRT LEG, SHUTOFF VALVE, PRESSURE REDUCING VALVE, ALL ASSOCIATED ACCESSORIES AND APPURTENANCES, AND CONNECT TO EQUIPMENT PER MANUFACTURER'S RECOMMENDATION. IF NO PROPANE-FUELED KITCHEN EQUIPMENT IS UTILIZED BASED ON SITE ADAPTATIONS, PROVIDE SHUTOFF VALVE AND CAP AT 150mm ABOVE FINISHED FLOOR FOR FUTURE KITCHEN EXPANSION.

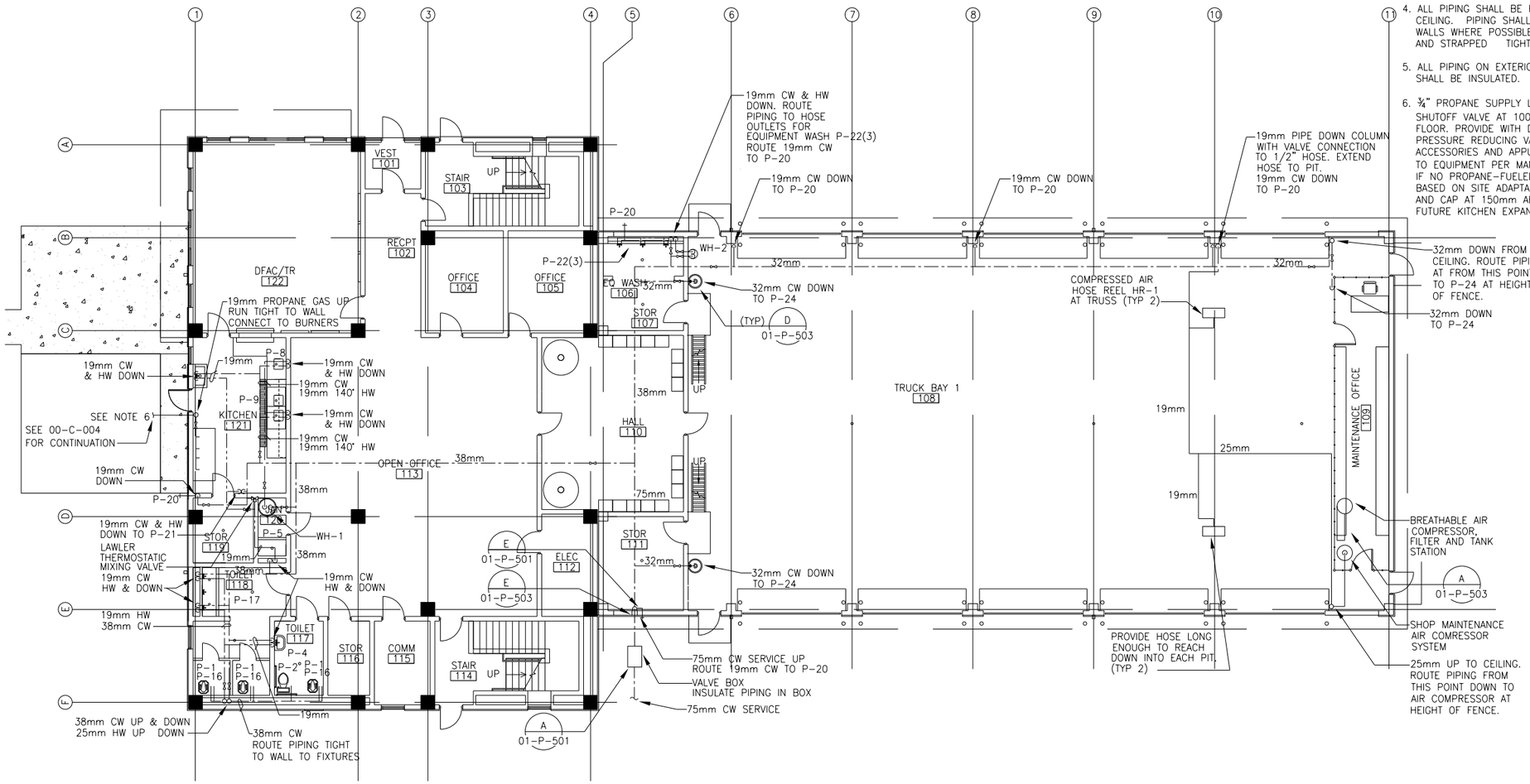

1 FIRE STATION FIRST FLOOR DOMESTIC WATER & COMPRESSED AIR PLUMBING PLAN

01-P-103 SCALE 1:100

REV	DATE	BY	SUB/APP	DESCRIPTION
0	06/30/10			SITE ADAPT CONSTRUCTION PLANS

DESIGNED D. HOYLE
DRAWN D. HOYLE
CHECKED J. MARIANETTI
IN CHARGE D. WHEELER
DATE 30 JUNE 2010

AFGHAN NATIONAL SECURITY FORCE
COMPREHENSIVE PLAN FOR FACILITIES DEVELOPMENT

MINISTRY OF INTERIOR (MoI) – AFGHAN NATIONAL POLICE
PROVINCIAL FIRE STATION – TYPE-B

FIRE STATION FIRST FLOOR DOMESTIC WATER & COM. AIR PLUMBING PLAN

SCALE AS SHOWN

PROJECT NO. 6151-08-0328

01-P-103

NOTES:

1. BUILDING HAS MULTIPLE ORIENTATIONS ON SITE. SEE CIVIL SITE PLAN FOR WATER AND SANITARY SERVICE ENTRANCE AND EXIT LOCATIONS. DOMESTIC WATER SERVICE SHALL BE PROVIDED WITH ONE VALVE BOX AS LOCATED ON SITE PLAN.
2. ALL TOILETS SHALL BE INSTALLED IN A NORTH/SOUTH ORIENTATION.
3. ALL EASTERN-TYPE WATER CLOSETS SHALL HAVE A HOSE BIBB INSTALLED ON OCCUPANT'S RIGHT-HAND SIDE.
4. ALL PIPING SHALL BE RUN TIGHT TO CEILING. PIPING SHALL NOT BE IN WALLS WHERE POSSIBLE BUT EXPOSED AND STRAPPED TIGHT TO WALL.
5. ALL PIPING ON EXTERIOR WALLS SHALL BE INSULATED.

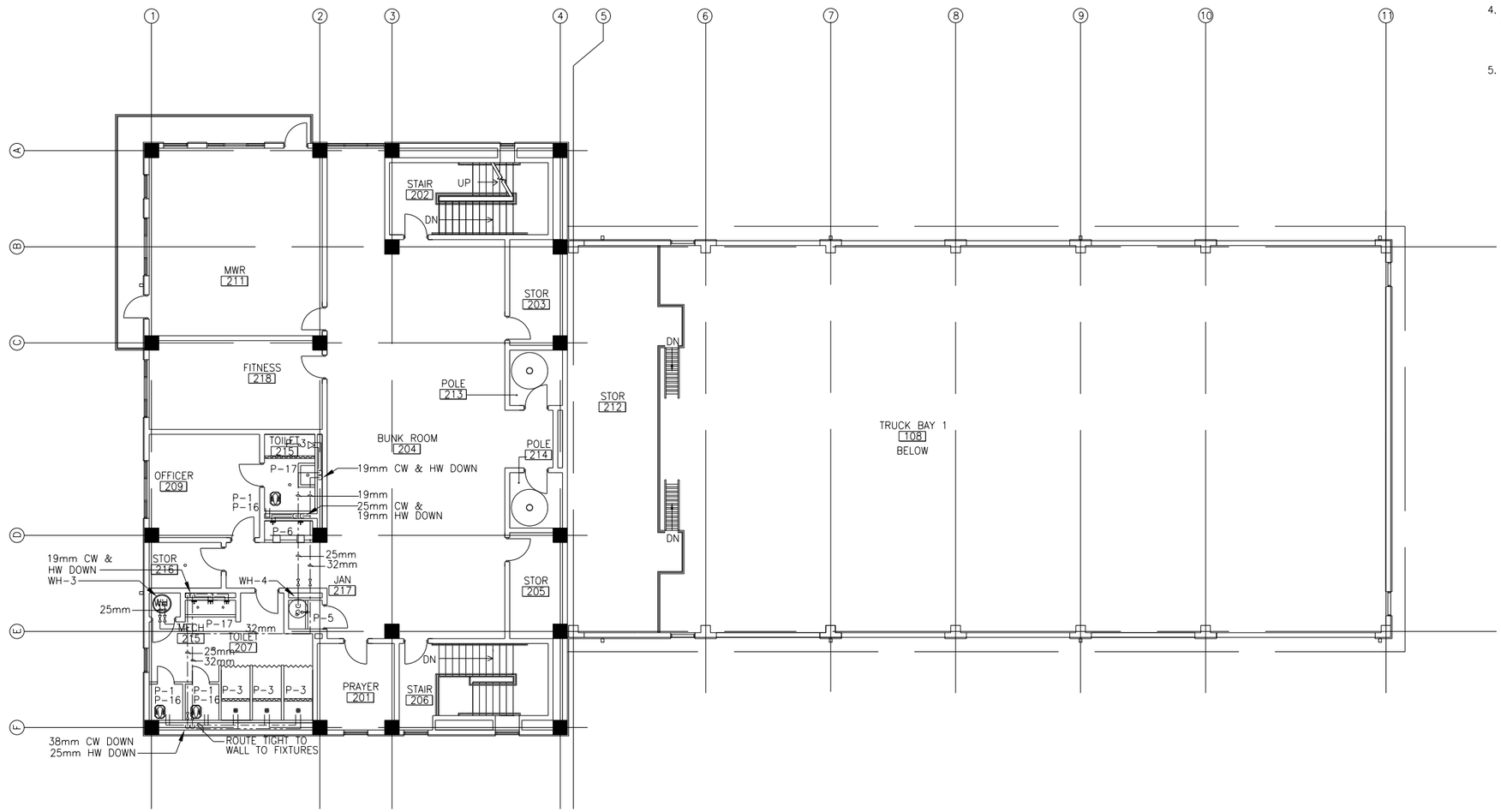

1 FIRE STATION SECOND FLOOR DOMESTIC WATER PLUMBING PLAN

01-P-104 SCALE 1:100

REV	DATE	BY	SUB	APP	DESCRIPTION
0	06/30/10				SITE ADAPT CONSTRUCTION PLANS

DESIGNED D. HOYLE
DRAWN D. HOYLE
CHECKED J. MARIANETTI
IN CHARGE D. WHEELER
DATE 30 JUNE 2010

AFGHAN NATIONAL SECURITY FORCE
COMPREHENSIVE PLAN FOR FACILITIES DEVELOPMENT

MINISTRY OF INTERIOR (MoI) – AFGHAN NATIONAL POLICE
PROVINCIAL FIRE STATION – TYPE-B

FIRE STATION SECOND FLOOR DOMESTIC WATER PLUMBING PLAN

SCALE AS SHOWN

PROJECT NO. 6151-08-0328

01-P-104

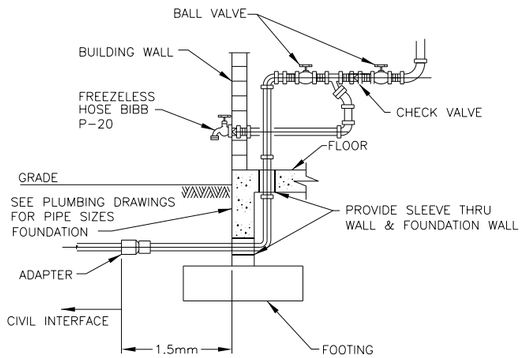

NOTE:
PROVIDE 40mm THICK PIPE INSULATION WITH WEATHERPROOF METAL CLADDING ON EXPOSED WATER SERVICE PIPING

F WATER SERVICE ENTRANCE DETAIL

01-P-501 SCALE NTS

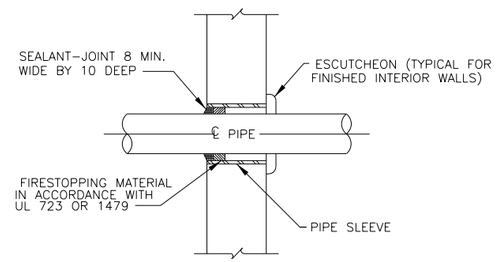

E TYP. WALL PENETRATION DETAIL

01-P-501 SCALE NTS

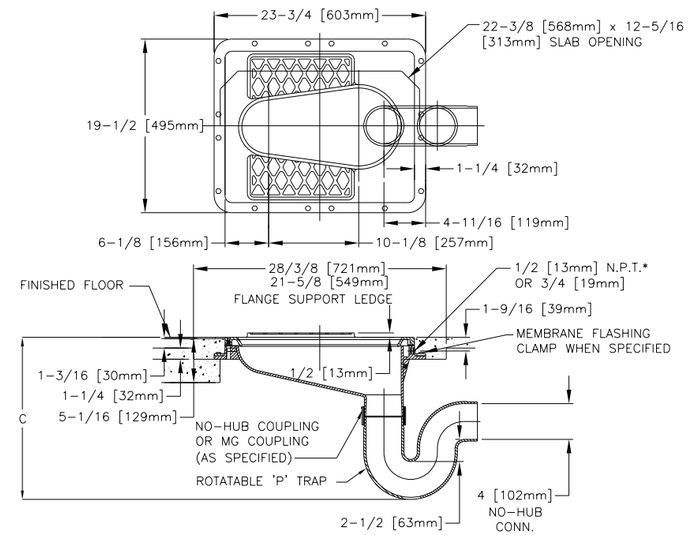

D WATER CLOSET-EASTERN

01-P-501 SCALE NTS

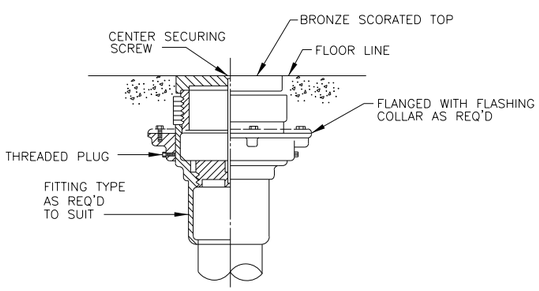

C FLOOR DRAIN CLEANOUT DETAIL

01-P-501 SCALE NTS

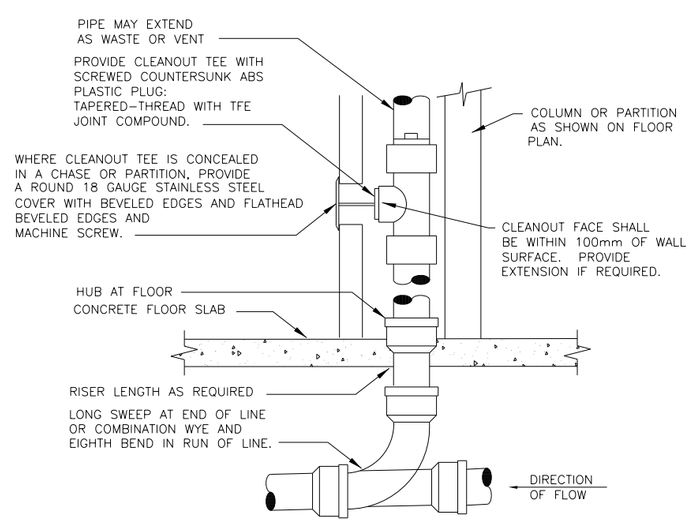

B WALL CLEANOUT DETAIL

01-P-501 SCALE NTS

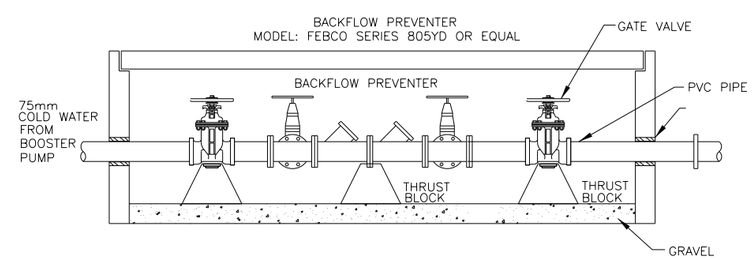

A VALVE BOX DETAIL

01-P-501 SCALE NTS

REV	DATE	BY	SUB'APP	DESCRIPTION
0	06/30/10			SITE ADAPT CONSTRUCTION PLANS

DESIGNED D. HOYLE
DRAWN D. HOYLE
CHECKED J. MARIANETTI
IN CHARGE D. WHEELER
DATE 30 JUNE 2010

AFGHAN NATIONAL SECURITY FORCE COMPREHENSIVE PLAN FOR FACILITIES DEVELOPMENT

MINISTRY OF INTERIOR (MoI) – AFGHAN NATIONAL POLICE
PROVINCIAL FIRE STATION – TYPE-B

FIRE STATION PLUMBING DETAILS

SCALE AS SHOWN

PROJECT NO. 6151-08-0328

01-P-501

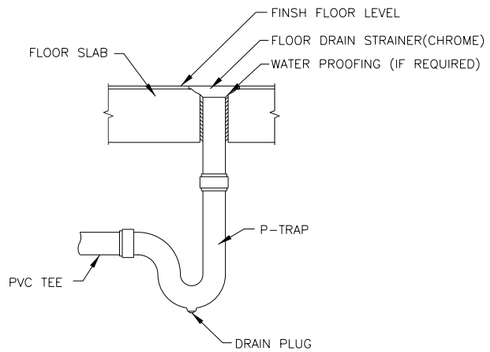

F TYP. FLOOR DRAIN DETAIL

01-P-502 SCALE NTS

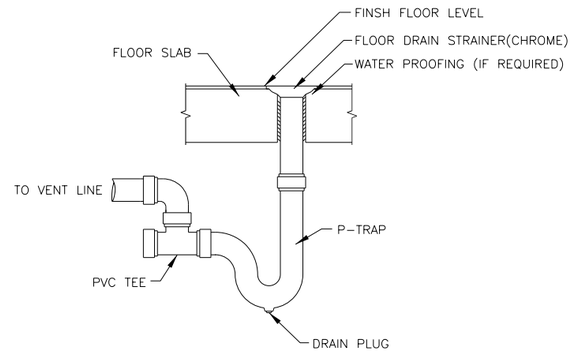

E TYP. FLOOR DRAIN WITH VENT INSTALLATION

01-P-502 SCALE NTS

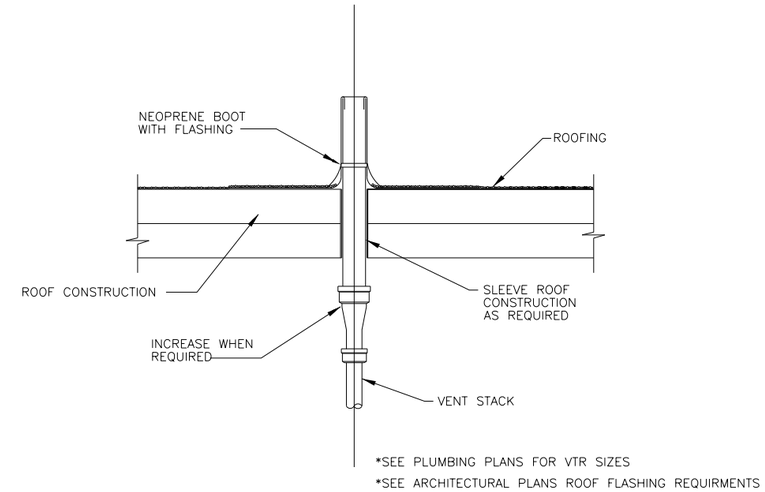

D VENT THROUGH ROOF DETAIL SECTION

01-P-502 SCALE NTS

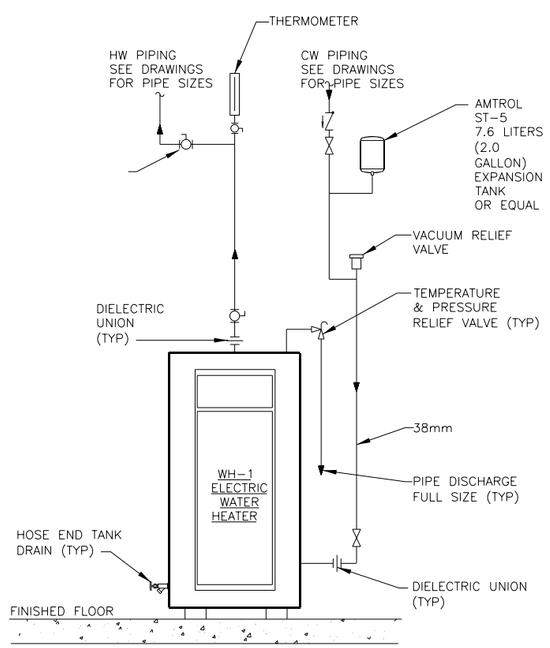

C ELECTRIC WATER HEATER WH-1&3 DETAIL

01-P-502 SCALE NTS

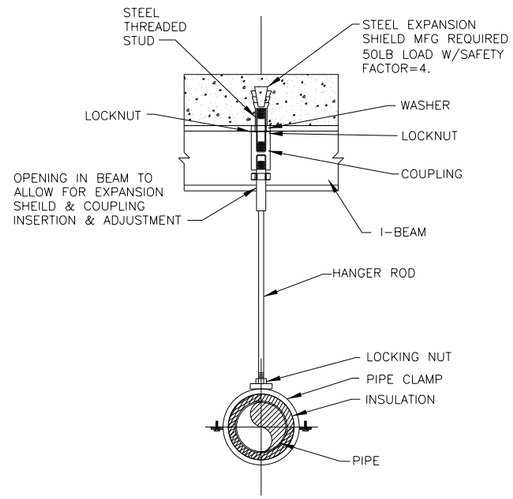

B PIPE HANGER DETAIL

01-P-502 SCALE NTS

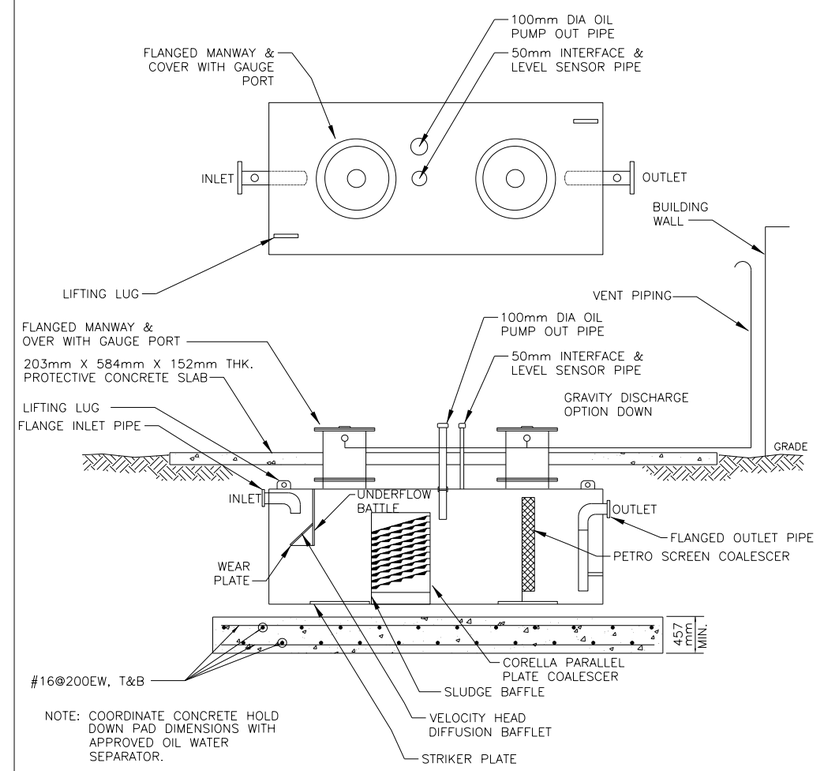

NOTE: COORDINATE CONCRETE HOLD DOWN PAD DIMENSIONS WITH APPROVED OIL WATER SEPARATOR.

A OIL WATER SEPARATOR DETAIL

01-P-502 SCALE NTS

REV	DATE	BY	SUB/APP	DESCRIPTION
0	06/30/10			SITE ADAPT CONSTRUCTION PLANS

DESIGNED D. HOYLE
DRAWN D. HOYLE
CHECKED J. MARIANETTI
IN CHARGE D. WHEELER
DATE 30 JUNE 2010

AFGHAN NATIONAL SECURITY FORCE
COMPREHENSIVE PLAN FOR
FACILITIES DEVELOPMENT

MINISTRY OF INTERIOR (MoI) – AFGHAN NATIONAL POLICE
PROVINCIAL FIRE STATION – TYPE-B

FIRE STATION PLUMBING DETAILS

SCALE AS SHOWN

PROJECT NO. 6151-08-0328

01-P-502

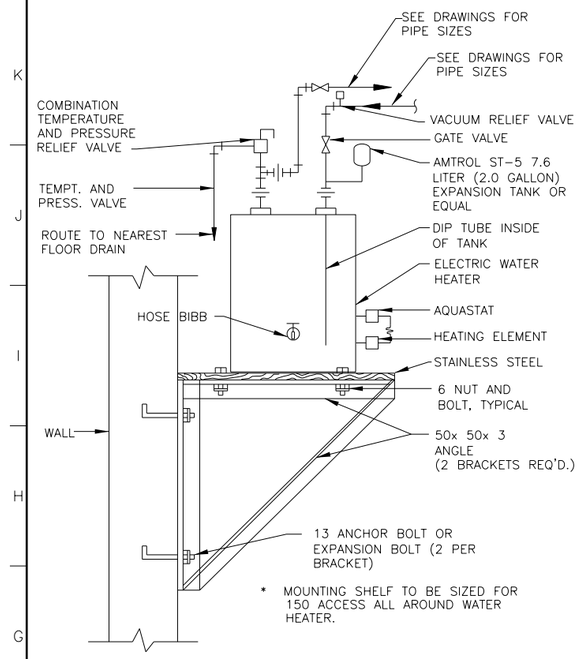

E WALL MOUNTED ELECTRIC WATER DETAIL

01-P-503 SCALE NTS

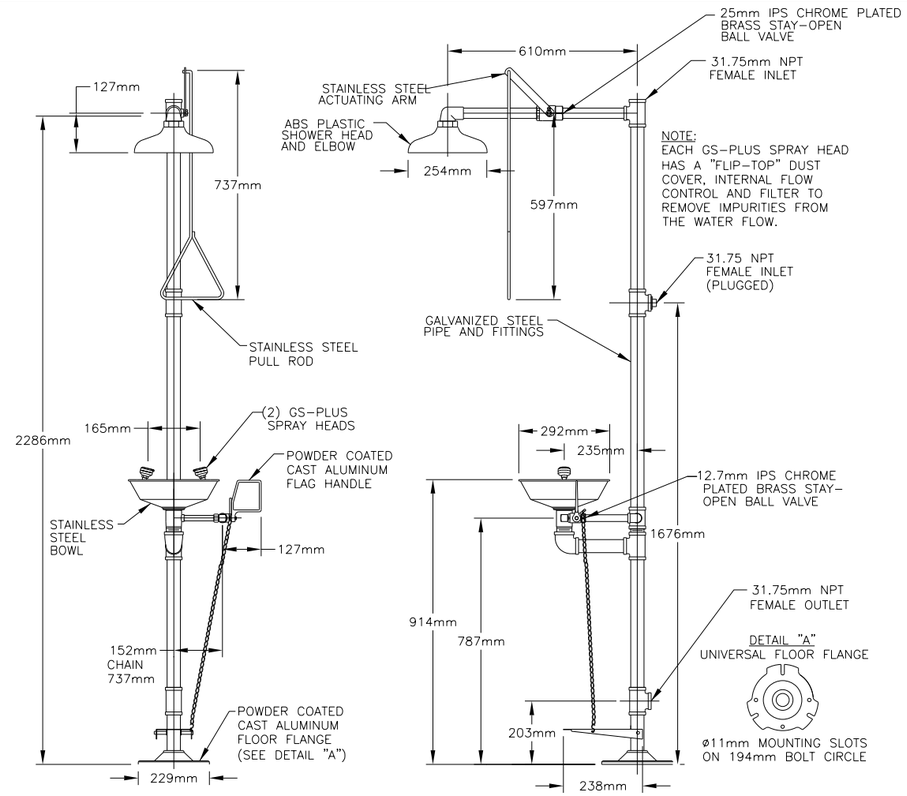

D EMERGENCY SHOWER DETAIL

01-P-503 SCALE NTS

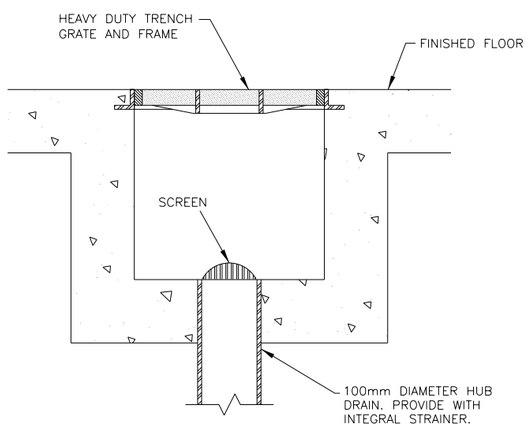

C TRENCH DRAIN DETAIL

01-P-503 SCALE NTS

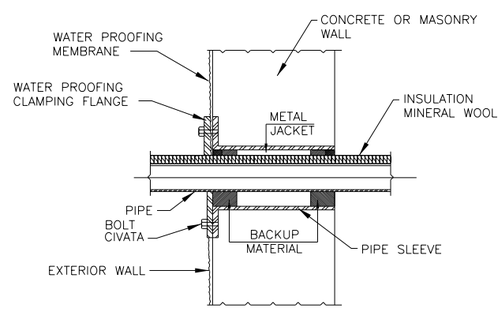

E PIPE SLEEVE THRU EXT. WALL OR FOUNDATION B/G

01-P-503 SCALE NTS B

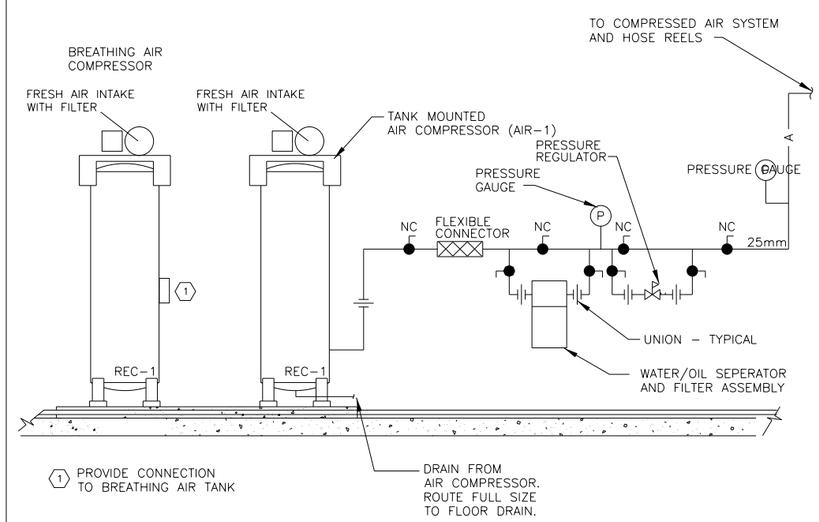

A SHOP AIR COMPRESSOR

01-P-503 SCALE NTS

REV	DATE	BY	SUB	APP	DESCRIPTION
0	06/30/10				SITE ADAPT CONSTRUCTION PLANS

DESIGNED D. HOYLE
DRAWN D. HOYLE
CHECKED J. MARIANETTI
IN CHARGE D. WHEELER
DATE 30 JUNE 2010

AFGHAN NATIONAL SECURITY FORCE
COMPREHENSIVE PLAN FOR FACILITIES DEVELOPMENT

MINISTRY OF INTERIOR (MoI) – AFGHAN NATIONAL POLICE
PROVINCIAL FIRE STATION – TYPE-B

FIRE STATION PLUMBING DETAILS

SCALE AS SHOWN

PROJECT NO. 6151-08-0328

01-P-503

NOTES:

1. BUILDING HAS MULTIPLE ORIENTATIONS ON SITE. SEE CIVIL SITE PLAN FOR WATER AND SANITARY SERVICE ENTRANCE AND EXIT LOCATIONS. DOMESTIC WATER SERVICE SHALL BE PROVIDED WITH ONE VALVE BOX AS LOCATED ON SITE PLAN.
2. ALL TOILETS SHALL BE INSTALLED IN A NORTH/SOUTH ORIENTATION.
3. ALL EASTERN-TYPE WATER CLOSETS SHALL HAVE A HOSE BIBB INSTALLED ON OCCUPANT'S RIGHT-HAND SIDE.
4. ALL PIPING SHALL BE RUN TIGHT TO CEILING. PIPING SHALL NOT BE IN WALLS WHERE POSSIBLE BUT EXPOSED AND STRAPPED TIGHT TO WALL.
5. ALL PIPING ON EXTERIOR WALLS SHALL BE INSULATED.

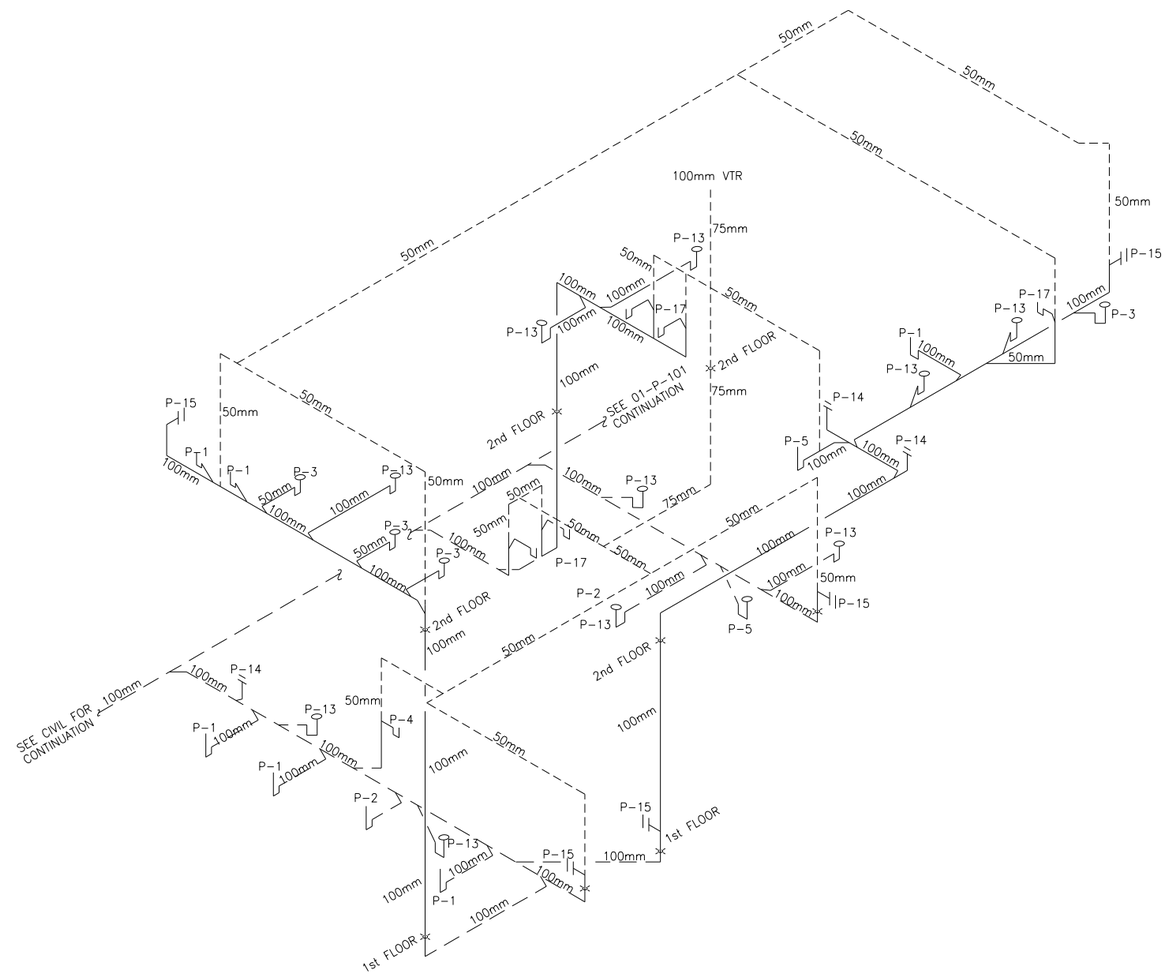

A	FIRE STATION WASTE AND VENT RISER DIAGRAMS – TOILET ROOMS
01-P-601	SCALE NTS

REV	DATE	BY	SUB	APP	DESCRIPTION
0	06/30/10				SITE ADAPT CONSTRUCTION PLANS

DESIGNED D. HOYLE
DRAWN D. HOYLE
CHECKED J. MARIANETTI
IN CHARGE D. WHEELER
DATE 30 JUNE 2010

AFGHAN NATIONAL SECURITY FORCE
COMPREHENSIVE PLAN FOR FACILITIES DEVELOPMENT

MINISTRY OF INTERIOR (MoI) – AFGHAN NATIONAL POLICE
PROVINCIAL FIRE STATION – TYPE-B

FIRE STATION WASTE AND VENT RISER DIAGRAM – TOILET ROOMS

SCALE AS SHOWN

PROJECT NO. 6151-08-0328

01-P-601

NOTES:

1. BUILDING HAS MULTIPLE ORIENTATIONS ON SITE. SEE CIVIL SITE PLAN FOR WATER AND SANITARY SERVICE ENTRANCE AND EXIT LOCATIONS. DOMESTIC WATER SERVICE SHALL BE PROVIDED WITH ONE VALVE BOX AS LOCATED ON SITE PLAN.
2. ALL TOILETS SHALL BE INSTALLED IN A NORTH/SOUTH ORIENTATION.
3. ALL EASTERN-TYPE WATER CLOSETS SHALL HAVE A HOSE BIBB INSTALLED ON OCCUPANT'S RIGHT-HAND SIDE.
4. ALL PIPING SHALL BE RUN TIGHT TO CEILING. PIPING SHALL NOT BE IN WALLS WHERE POSSIBLE BUT EXPOSED AND STRAPPED TIGHT TO WALL.
5. ALL PIPING ON EXTERIOR WALLS SHALL BE INSULATED.

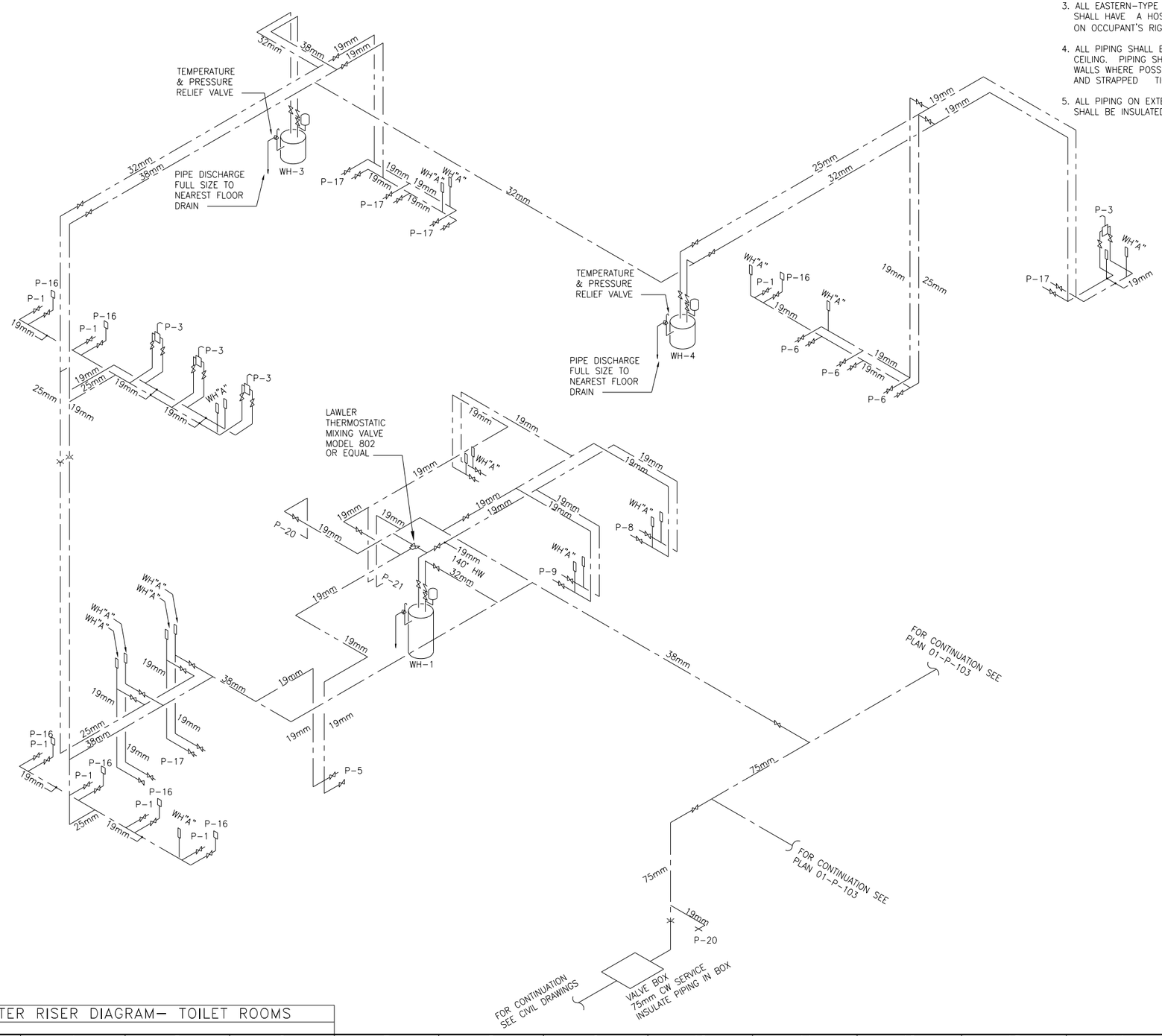

A	FIRE STATION DOMESTIC WATER RISER DIAGRAM– TOILET ROOMS
01-P-602	SCALE NTS

REV	DATE	BY	SUB	APP	DESCRIPTION
0	06/30/10				SITE ADAPT CONSTRUCTION PLANS

DESIGNED D. HOYLE
DRAWN D. HOYLE
CHECKED J. MARIANETTI
IN CHARGE D. WHEELER
DATE 30 JUNE 2010

AFGHAN NATIONAL SECURITY FORCE COMPREHENSIVE PLAN FOR FACILITIES DEVELOPMENT

MINISTRY OF INTERIOR (MoI) – AFGHAN NATIONAL POLICE PROVINCIAL FIRE STATION – TYPE-B

FIRE STATION DOMESTIC WATER RISER DIAGRAM – TOILET ROOMS

SCALE AS SHOWN

PROJECT NO. 6151-08-0328

01-P-602

PLUMBING FIXTURE CONNECTION SCHEDULE

MARK	FIXTURE	CW MM/INCH.	HW MM/INCH.	VENT MM/INCH.	WASTE MM/INCH.	REMARKS
P-1	WATER CLOSET / HOSE CONNECTION	19 (3/4")	—	50 (2")	100 (4")	EASTERN WATER CLOSET (SEE ARCHITECTURAL E-A-404) DRAWING FOR LOCATION OF HOSE BIBB
P-2	WATER CLOSET	19 (3/4")	—		100 (4")	WESTERN WATER CLOSET
P-3	SHOWER	12.7 (1/2")	12.7 (1/2")	50 (2")	50 (2")	SEE ARCHITECTURAL DRAWING A-404 FOR DESCRIPTION AND DETAIL
P-4	WALL HUNG LAVATORY	12.7 (1/2")	12.7 (1/2")	50 (2")	50 (2")	
P-5	JANITOR'S SINK (CONCRETE)	12.7 (1/2")	12.7 (1/2")	50 (2")	50 (2")	SEE ARCHITECTURAL DRAWING C/A-404 FOR DESCRIPTION AND DETAIL
P-6	ABULITION	19 (3/4")	19 (3/4")	—	–	SEE ARCHITECTURAL DRAWING A-404 FOR DESCRIPTION AND DETAIL
P-8	KITCHEN SINK SINGLE COMPARTMENT	19 (3/4")	19 (3/4")	50 (2")	50 (2")	
P-9	KITCHEN SINK DOUBLE COMPARTMENT	19 (3/4")	19 (3/4")	50 (2")	50 (2")	
P-11	HAND SINK	19 (3/4")	19 (3/4")	50 (2")	50 (2")	SEE ARCHITECTURAL DRAWING 1/01-A-401 FOR DESCRIPTION AND DETAIL
P-13	FLOOR DRAIN	—	—	—	100 (4")	PROVIDE BASKET STRAINER
P-14	FLOOR / GRADE CLEAN OUT	—	—	—	100 (4")	
P-15	WALL CLEAN OUT	—	—	—	100 (4")	
P-16	HOSE BIBB (INSIDE)	19 (3/4")	—	—	–	PROVIDE CHICAGO FAUCET #442-83044CP OR EQUAL
P-17	LAVATORIES (CONCRETE SINK)	12.7 (1/2")	12.7 (1/2")	50 (2")	50 (2")	SEE ARCHITECTURAL DRAWING 1-A-403 & 2-A-403 FOR DESCRIPTION AND DETAIL
P-18	TRENCH DRAIN	—	—	50 (2")	50 (2")	
P-20	HOSE BIBB (OUTSIDE)	12.7 (1/2")	—	—	–	PROVIDE WOODFORD FREEZELES HOSE BIBB MODEL#17 OR EQUAL
P-21	HOSE BIBB (KITCHEN)	12.7 (1/2")	12.7 (1/2")	—	–	PROVIDE CHICAGO FAUCET #305-LESSARM OR EQUAL
P-22	EQUIPMENT WASH OFF	12.7 (1/2")	12.7 (1/2")	—	–	MIXING VALVE WITH HOSE (CHICAGO FAUCET #305-LESSARM OR EQUAL)
P-24	EMERGENCY SHOWER STATION	32 (1 1/4")	—	—	–	GUARDIAN G1950HFC OR EQUAL

NOTES:

1. ALL HORIZONTAL PIPINGS SHALL BE ROUNTED TIGHT TO CEILING WHEREVER POSSIBLE.
2. INSTALL PIPE SUPPORTS ACCORDING TO 2006 IPC PLUMBING CODE.

ELECTRIC WATER HEATER SCHEDULE

MARK	SERVES	CAPACITY	INPUT	POWER	VOLTAGE	LOCATION	RECOVERY	REF MODEL OR EQUAL
WH-1	KITCHEN	119 GALLONS	–	24 KW	380/3PH	SEE PLANS FOR LOCATION	99 GPH @ 100°F	BRADFORD WHITE 120A-24KW-3
WH-2	EQUIPMENT WASH	6 GALLONS	–	6 KW	380/3PH	SEE PLANS FOR LOCATION	25 GPH @ 100°F	BRADFORD WHITE 6A-6KW-3
WH-3	TOILET ROOMS 1ST & 2ND	80 GALLONS	–	12 KW	380/3PH	SEE PLANS FOR LOCATION	50 GPH @ 100°F	BRADFORD WHITE 80A-12KW-3
WH-4	JANITORS CLOSET/ TOILET ROOM	30 GALLONS	–	6 KW	380/3PH	SEE PLANS FOR LOCATION	25 GPH @ 100°F	BRADFORD WHITE 30A-6KW-3

INTERCEPTOR SCHEDULE

UNIT NO.	SERVICE	MINIMUM CAPACITY CUBIC FEET (CUBIC METERS)	FLOW THROUGH CAPACITY GPM (L/S)	GREASE RETENTION LBS (KG)	SERVICE	MANUFACTURE	COMMENTS
GT-1	GREASE	NA	12 (0.L76)	24 (10.88)	KITCHEN	ZURN, OR EQUAL	REFER TO CIVIL FOR INFORMATION
OIL-1	OIL	550 GAL (73.5)	55 (3.47)	NA	TRUCK PARKING	HIGHLAND TANK 550 OR EQUAL	REFER TO DETAIL DRAWINGS

COMPRESSOR AIR HOSE REEL SCHEDULE

UNIT NO.	HOSE LENGTH FT. (M)	SERVICE PRESSURE PSIG (MPA)	HOSE ID INCES (CM)	REEL TYPE	MOUNTING LOCATION	ACCESSORIES	REFERENCE TO MAKES	COMMENTS
HR-1	100 (30.5)	125 (0.86)	0.375 (0.95)	RATCHETING, SPRING RETRACTING	ROOF TRUSS	FEMALE QUICK CONNECT	HOSECRAFT, INGERSOLL-RAND BAUER	PIVOTING, COMPLETE WITH HOSE STOP
HR-2	50 (15.2)	125 (0.86)	0.375 (0.95)	RATCHETING, SPRING RETRACTING	PIT FLOOR	FEMALE QUICK CONNECT	HOSECRAFT, INGERSOLL-RAND BAUER	COMPLETE WITH HOSE STOP

NOTE: CONTRACTOR TO ASSEMBLE LOOSE DEVICES AND PIPE DRIPS TO DRAIN.

WATER HAMMER ARRESTOR SIZING CHART

SYMBOL	FIXTURE UNIT RATING	NIPPLE SIZE (MM)
WH"A"	1-11	20
WH"B"	12-32	25
WH"C"	33-60	25

AIR COMPRESSOR AND DRYER SCHEDULE

UNIT NO.	COMPRESSED AIR FLOW SCFM (SCMH)	DISCHARGE PRESSURE PSIG (MPA)	COMPRESSOR HP (KW)	VOLTAGE	PHASES	HERTZ	DRYER TYPE	DEPOINT TEMP DEG F (DEG C)	DRYER HP (KW)	COMPRESSOR TYPE	STORAGE TANK VOLUME GALLONS LITTERS	SOUND dBA	REFERENCE TO MAKE & MODEL	COMMENTS
COMP-1	49 (81.8)	125 (0.86)	15 (22.4)	380	3	50	REFRIGERATED	38 (3.3)	0.25 (.19)	RECIPROCATING	120 (454)	<80	CHAMPION, VR15F-12; DRYER CRN50	PACKAGE SKID WITH RELIEF, AUTO DRAIN, OIL SEPARTORS, AND VALVING
COMP-2	19 (31.7)	6000	15 (11.2)	380	3	50	DESICANT	-50 (45)	NA	OIL FREE RECIP	NA	<80	BAUER UNIII-19HE3/50	PACKAGED BREATHING AIR RE-FILL SYSTEM (DOCKS 2 TANKS)

NOTE: CONTRACTOR TO ASSEMBLE LOOSE DEVICES AND PIPE DRIPS TO DRAIN.

LINES STYLE / DESCRIPTION

- COLD WATER (CW)
- HOT WATER (HW)
- VENT PIPE (V)
- SANITARY/WASTE PIPE ABOVE FLOOR (SP)
- SAN — SANITARY/WASTE PIPE BELOW FLOOR (MIN. 50 SIZE)

PLUMBING LEGEND

SYMBOL	DESCRIPTION
AV	ANGLE VALVE
BV	BALL VALVE
CV	CHECK VALVE
DV	DRAIN VALVE
	COCK VALVE
FCO / GCO	FLOOR /GCO CLEANOUT
FD	FLOOR DRAIN
FS	FLOOR SIPHON
GV	GATE VALVE
	MIXING VALVE
HB	HOSE BIBB, PLAN
	PIPE TURNING DOWN
	PIPE TURNING UP
WCO	WALL CLEANOUT
	P-TRAP
	REDUCER-INCREASER
	SUPPORT LOCATION
	Y-TYPE STRAINER
U	UNION
WHA	WATER HAMMER ARRESTOR

ABBREVIATION DESCRIPTION

A.F.F.	ABOVE FINISHED FLOOR
℄	CENTER LINE
CO	CLEANOUT
COYB	CLEANOUT IN YARD BOX
CW	COLD WATER PIPES
HW	HOT WATER PIPES
SP	SOIL PIPE
U/G	UNDER GROUND
VP	VENT PIPE
V.R.V	VACUUM RELIEF VALVE
WCO	WALL CLEANOUT
WHA	WATER HAMMER ARRESTOR
WP	WASTE PIPE
VTR	VENT THRU ROOF
AFF	ABOVE FINISH FLOOR
AVTR	ACID VENT THRU ROOF
WH	WALL HYDRANT W/VACUUM BREAKER

EQUIPMENT IDENTIFICATION

WH-XX
- ELECTRICAL WATER HEATER
- UNIT NUMBER

REV	DATE	BY	SUB	APP	DESCRIPTION
0	06/30/10				SITE ADAPT CONSTRUCTION PLANS

DESIGNED D. HOYLE
DRAWN D. HOYLE
CHECKED J. MARIANETTI
IN CHARGE D. WHEELER
DATE 30 JUNE 2010

AFGHAN NATIONAL SECURITY FORCE COMPREHENSIVE PLAN FOR FACILITIES DEVELOPMENT

MINISTRY OF INTERIOR (MoI) – AFGHAN NATIONAL POLICE PROVINCIAL FIRE STATION – TYPE-B

FIRE STATION PLUMBING SCHEDULES AND LEGEND

SCALE AS SHOWN

PROJECT NO. 6151-08-0328

01-P-603

A | FIRE STATION PLUMBING SCHEDULES AND LEGEND

01-P-603 SCALE NTS

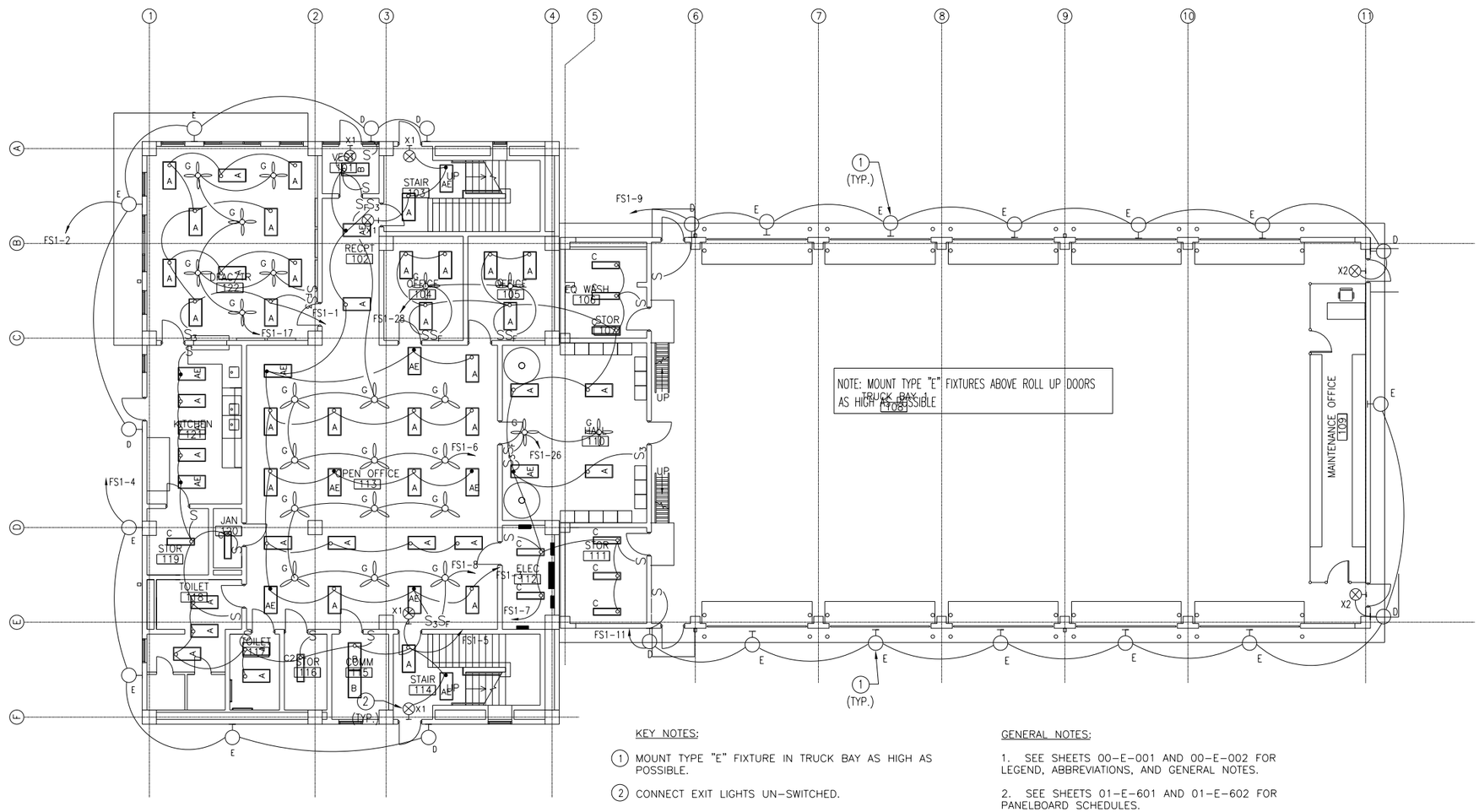

KEY NOTES:

1. MOUNT TYPE "E" FIXTURE IN TRUCK BAY AS HIGH AS POSSIBLE.
2. CONNECT EXIT LIGHTS UN-SWITCHED.

GENERAL NOTES:

1. SEE SHEETS 00-E-001 AND 00-E-002 FOR LEGEND, ABBREVIATIONS, AND GENERAL NOTES.
2. SEE SHEETS 01-E-601 AND 01-E-602 FOR PANELBOARD SCHEDULES.
3. ALL EXPOSED INTERIOR CONDUITS SHALL BE RGS THREADED (TYPICAL FOR INTERIORS).
4. CONTRACTOR SHALL USE CONDUCTOR INSULATION TYPE 'THWN-2' FOR ALL BRANCH CIRCUITS AS SHOWN ON DRAWINGS.
5. WIRE AMPACITIES, AS LISTED IN THE 2008 NATIONAL ELECTRIC CODE, ARE BASED ON 75°C RATINGS AND 3 OR LESS CURRENT-CARRYING CONDUCTORS WITHIN A SINGLE CONDUIT BODY/RACEWAY. CONTRACTOR SHALL DE-RATE CONDUCTOR TO 80% OF ITS STATED AMPACITY IF 4 TO 6 CURRENT-CARRYING CONDUCTORS ARE INSTALLED IN A SINGLE CONDUIT BODY/RACEWAY. NO MORE THAN 6 CURRENT-CARRYING CONDUCTORS SHALL BE INSTALLED IN A SINGLE CONDUIT BODY/RACEWAY.

0 1000 2000 4000
SCALE: 1:100

1 FIRST FLOOR LIGHTING PLAN
01-E-101 SCALE 1:100

REV	DATE	DESCRIPTION	BY	SUB	APP
0	06/30/10	SITE ADAPT CONSTRUCTION PLANS			

DESIGNED J. GILMER
DRAWN J. GILMER
CHECKED B. CRAWFORD
IN CHARGE D. WHELLER
DATE 30 JUNE 2010

AFGHAN NATIONAL SECURITY FORCE
COMPREHENSIVE PLAN FOR FACILITIES DEVELOPMENT
MINISTRY OF INTERIOR (MoI) – AFGHAN NATIONAL POLICE
PROVINCIAL FIRE STATION – TYPE-B
FIRE STATION FIRST FLOOR LIGHTING PLAN

SCALE AS SHOWN
PROJECT NO. 6151-08-0328
01-E-101

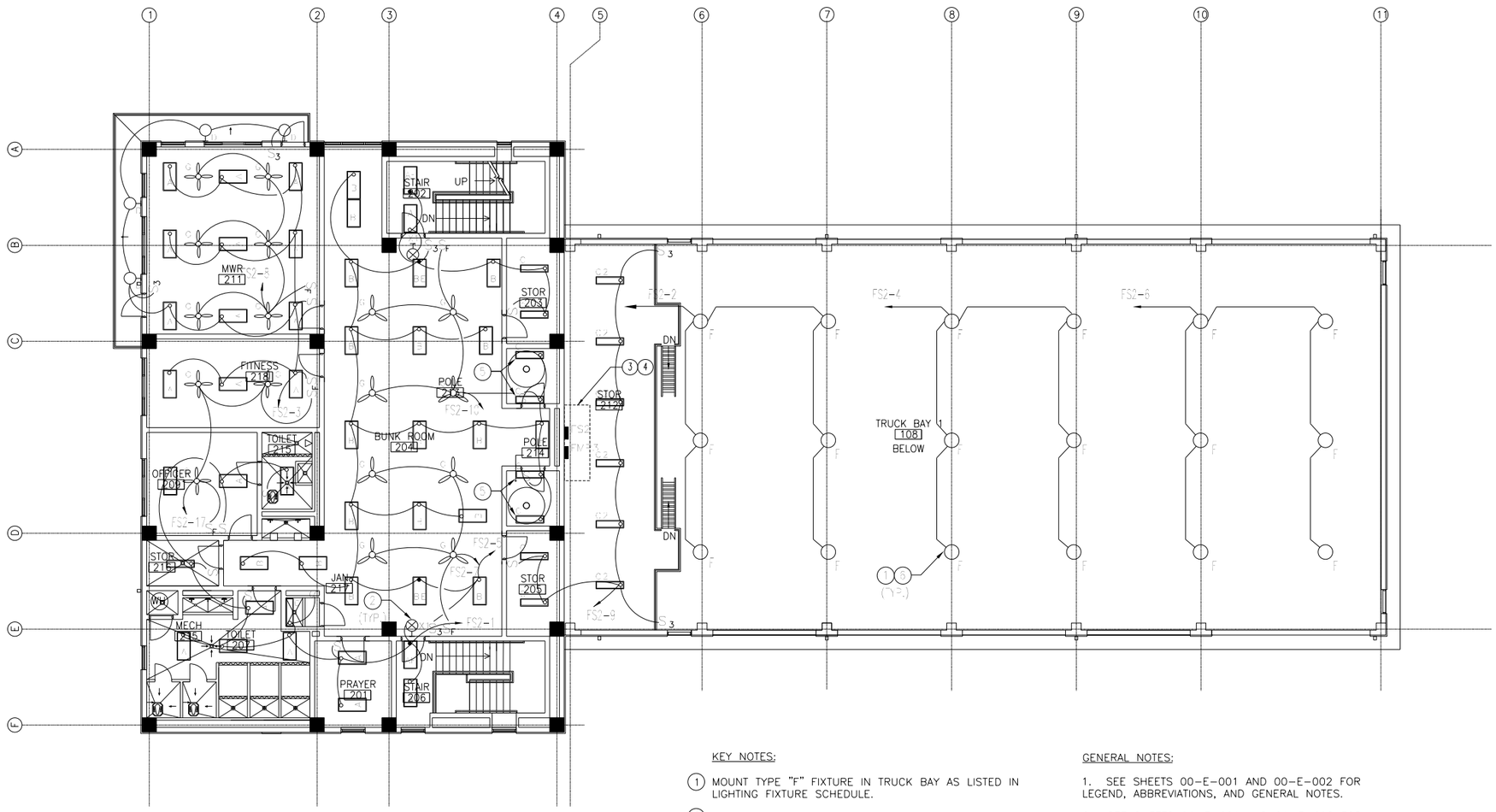

KEY NOTES:

1. MOUNT TYPE "F" FIXTURE IN TRUCK BAY AS LISTED IN LIGHTING FIXTURE SCHEDULE.
2. CONNECT EXIT LIGHTS UN-SWITCHED.
3. CLEARANCE SHALL BE MAINTAINED AND MARKED AROUND PANELS 'FS2' AND 'FMP4' AS REQUIRED PER 2008 NEC ARTICLE 110. NO STORAGE SHALL BE PERMITTED IN CLEARANCE AREA.
4. REFER TO DETAIL F/01-E-502 FOR FIRESTOPPING.
5. MOUNT FIXTURES ABOVE DOOR.
6. PROVIDE 250 WATT QUARTZ RESTRIKE SYSTEM IN THIS FIXTURE.

GENERAL NOTES:

1. SEE SHEETS 00-E-001 AND 00-E-002 FOR LEGEND, ABBREVIATIONS, AND GENERAL NOTES.
2. SEE SHEETS 01-E-601 AND 01-E-602 FOR PANELBOARD SCHEDULES.
3. ALL EXPOSED INTERIOR CONDUITS SHALL BE RGS THREADED (TYPICAL FOR INTERIORS).
4. CONTRACTOR SHALL USE CONDUCTOR INSULATION TYPE 'THWN-2' FOR ALL BRANCH CIRCUITS AS SHOWN ON DRAWINGS.
5. WIRE AMPACITIES, AS LISTED IN THE 2008 NATIONAL ELECTRIC CODE, ARE BASED ON 75°C RATINGS AND 3 OR LESS CURRENT-CARRYING CONDUCTORS WITHIN A SINGLE CONDUIT BODY/RACEWAY. CONTRACTOR SHALL DE-RATE CONDUCTOR TO 80% OF ITS STATED AMPACITY IF 4 TO 6 CURRENT-CARRYING CONDUCTORS ARE INSTALLED IN A SINGLE CONDUIT BODY/RACEWAY. NO MORE THAN 6 CURRENT-CARRYING CONDUCTORS SHALL BE INSTALLED IN A SINGLE CONDUIT BODY/RACEWAY.

0 1000 2000 4000

SCALE: 1:100

1 SECOND FLOOR LIGHTING PLAN

01-E-102 SCALE 1:100

REV	DATE	BY	DESCRIPTION
0	06/30/10	SUBAPP	SITE ADAPT CONSTRUCTION PLANS

DESIGNED J. GILMER
DRAWN J. GILMER
CHECKED B. CRAWFORD
IN CHARGE D. WHEELER
DATE 30 JUNE 2010

AFGHAN NATIONAL SECURITY FORCE COMPREHENSIVE PLAN FOR FACILITIES DEVELOPMENT

MINISTRY OF INTERIOR (MoI) – AFGHAN NATIONAL POLICE PROVINCIAL FIRE STATION – TYPE-B

FIRE STATION SECOND FLOOR LIGHTING PLAN

SCALE AS SHOWN

PROJECT NO. 6151-08-0328

01-E-102

GENERAL NOTES:

1. SEE SHEETS 00-E-001 AND 00-E-002 FOR LEGEND, ABBREVIATIONS, AND GENERAL NOTES.
2. SEE SHEETS 01-E-601 AND 01-E-602 FOR PANEL BOARD SCHEDULES AND ELECTRICAL POWER RISER DIAGRAM.
3. ALL EXPOSED INTERIOR CONDUITS SHALL BE RGS THREADED (TYPICAL FOR INTERIORS).
4. PROVIDE 19MM CONDUIT FOR ALL COMMUNICATIONS OUTLETS ROUTED TO COMMUNICATIONS ROOM AND TERMINATED AT TOP OF BACKBOARD.
5. PROVIDE A 19MM X 2438.4MM X 2438.4MM PLYWOOD BACKBOARD IN THE COMMUNICATIONS ROOM.
6. THE FIRE ALARM SYSTEM IS CLASS B CONVENTIONAL TYPE.
7. SEE SHEET 01-E-501 FOR FIRE ALARM ZONES AND RISER DIAGRAM.
8. PROVIDE BACKUP BATTERY POWER FOR ALL SMOKE DETECTORS.

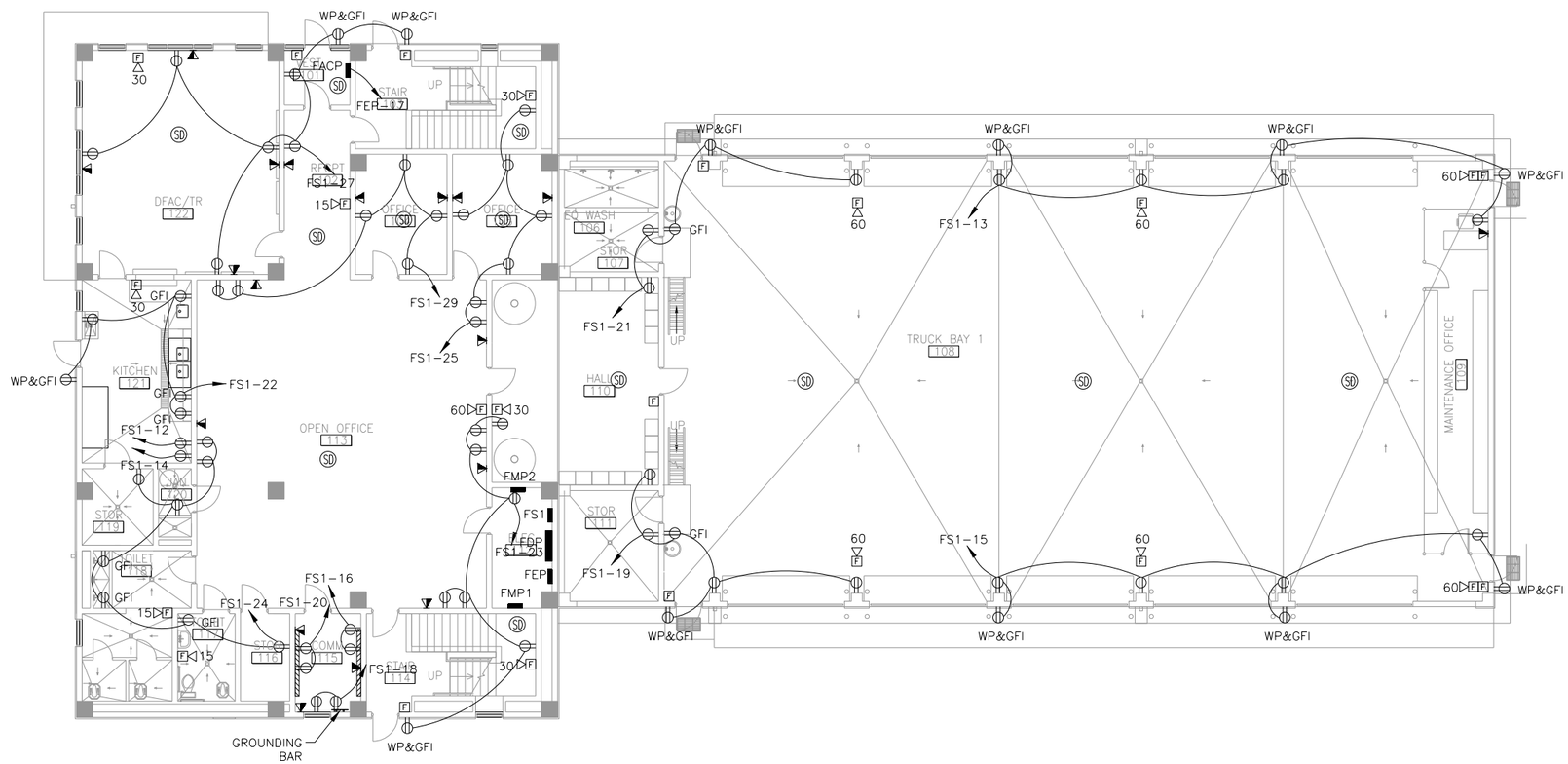

0 1000 2000 4000

SCALE: 1:100

1 FIRE STATION FIRST – FLOOR POWER & SYSTEMS PLAN

01-E-103 SCALE 1:100

REV	DATE	DESCRIPTION	BY	SUB APP
0	06/30/10	SITE ADAPT CONSTRUCTION PLANS		

DESIGNED S. WILLIAMS
DRAWN L. KRAVCHUK
CHECKED B. CRAWFORD
IN CHARGE D. WHEELER
DATE 30 JUNE 2010

AFGHAN NATIONAL SECURITY FORCE
COMPREHENSIVE PLAN FOR FACILITIES DEVELOPMENT

MINISTRY OF INTERIOR (MoI) – AFGHAN NATIONAL POLICE
PROVINCIAL FIRE STATION – TYPE-B

FIRE STATION FIRST FLOOR POWER & SYSTEM PLAN

SCALE AS SHOWN

PROJECT NO. 6151-08-0328

01-E-103

GENERAL NOTES:

1. SEE SHEET 00-E-001 AND 00-E-002 FOR LEGEND, ABBREVIATIONS, AND GENERAL NOTES.
2. COORDINATE MECHANICAL AND PLUMBING EQUIPMENT WITH MECHANICAL AND PLUMBING DRAWINGS.
3. SEE SHEET 01-E-601 AND 01-E-602 FOR PANEL BOARD SCHEDULES AND ELECTRICAL POWER RISER DIAGRAM.
4. ALL EXPOSED INTERIOR CONDUITS SHALL BE RGS THREADED (TYPICAL FOR INTERIORS).
5. EXHAUST FAN DISCONNECT AND ELECTRICAL UNIT HEATER DISCONNECT ARE PROVIDED BY MECHANICAL.

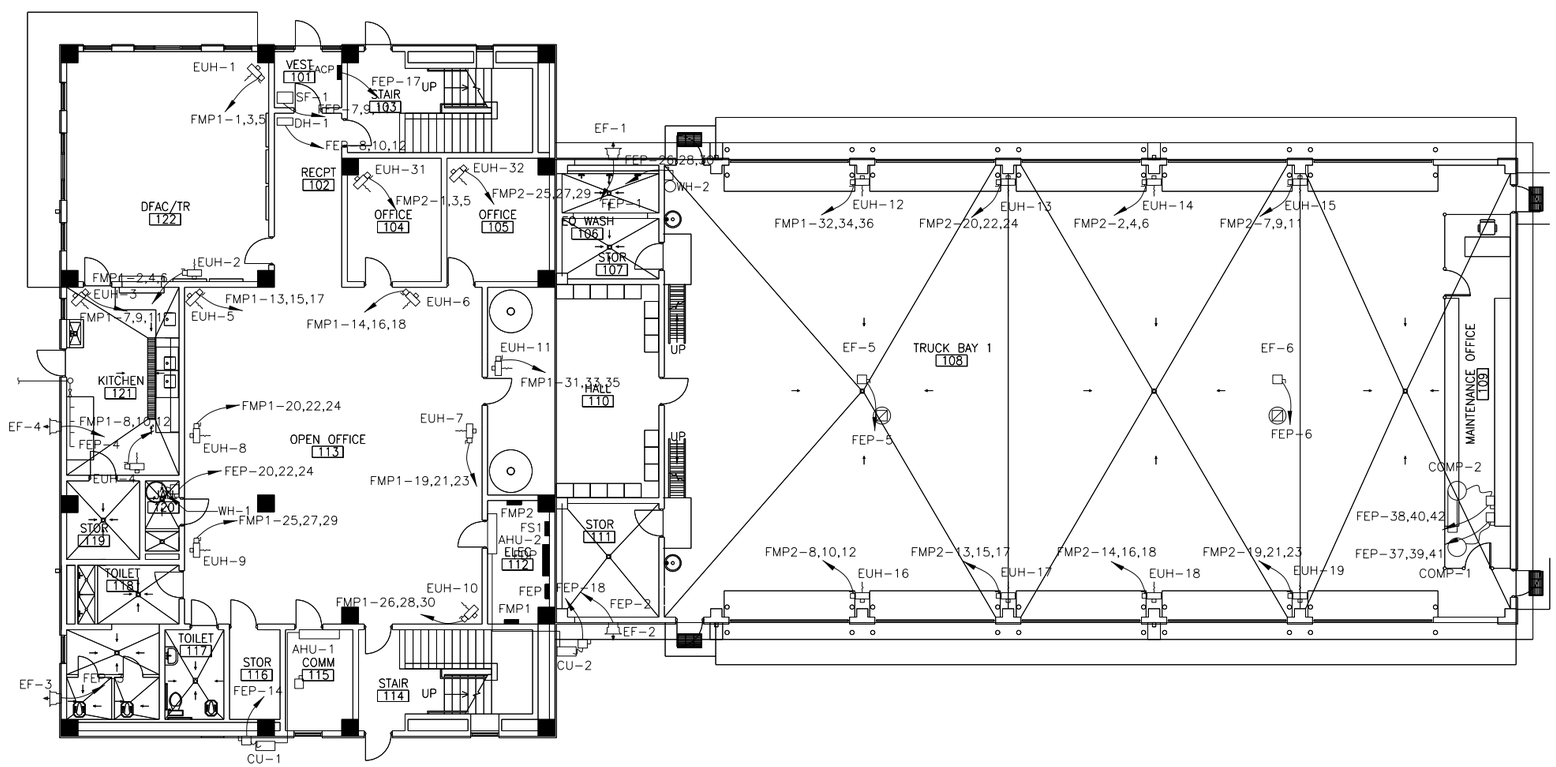

0 1000 2000 4000

SCALE: 1:100

1 FIRESTATION FIRST FLOOR – POWER PLAN /MECHANICAL

01-E-104 SCALE 1:100

REV	DATE	BY	SUB/APP	DESCRIPTION
0	06/30/10			SITE ADAPT CONSTRUCTION PLANS

DESIGNED M. ESTAFANOUS
DRAWN L. KRAVCHUK
CHECKED B. CRAWFORD
IN CHARGE D. WHEELER
DATE 30 JUNE 2010

AFGHAN NATIONAL SECURITY FORCE COMPREHENSIVE PLAN FOR FACILITIES DEVELOPMENT

MINISTRY OF INTERIOR (MoI) – AFGHAN NATIONAL POLICE PROVINCIAL FIRE STATION – TYPE-B

FIRE STATION FIRST FLOOR POWER PLAN – MECHANICAL

SCALE AS SHOWN

PROJECT NO. 6151-08-0328

01-E-104

GENERAL NOTES:

1. SEE SHEETS 00-E-001 AND 00-E-002 FOR LEGEND, ABBREVIATIONS, AND GENERAL NOTES.
2. SEE SHEETS 01-E-601 AND 01-E-602 FOR PANEL BOARD SCHEDULES AND ELECTRICAL POWER RISER DIAGRAM.
3. ALL EXPOSED INTERIOR CONDUITS SHALL BE RGS THREADED (TYPICAL FOR INTERIORS).
4. PROVIDE 19MM CONDUIT FOR ALL COMMUNICATIONS OUTLETS ROUTED TO COMMUNICATIONS ROOM AND TERMINATED AT TOP OF BACKBOARD.
5. PROVIDE A 19MM X 2438.4MM X 2438.4MM PLYWOOD BACKBOARD IN THE COMMUNICATIONS ROOM.
6. THE FIRE ALARM SYSTEM IS CLASS B CONVENTIONAL TYPE.
7. SEE SHEET 01-E-501 FOR FIRE ALARM ZONES AND RISER DIAGRAM.
8. PROVIDE BACKUP BATTERY POWER FOR ALL SMOKE DETECTORS.

KEY NOTES:

1. CLEARANCE SHALL BE MAINTAINED AND MARKED AROUND PANELS 'FS2' AND 'FMP4' AS REQUIRED PER 2008 NEC ARTICLE 110. NO STORAGE SHALL BE PERMITTED IN CLEARANCE SPACE.
2. REFER TO DETAIL F/01-E-502 FOR FIRESTOPPING.

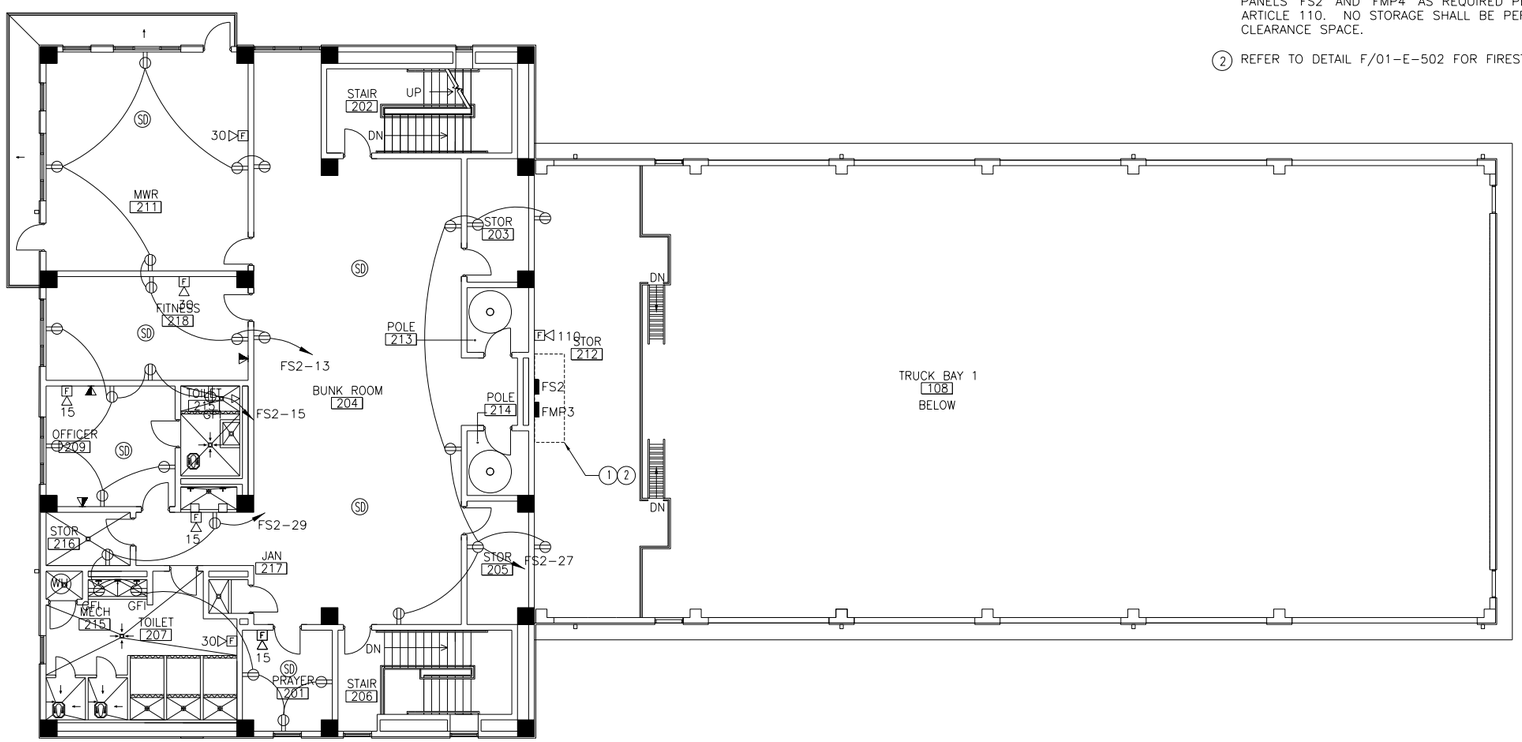

0 1000 2000 4000
SCALE: 1:100

1 FIRESTATION SECOND FLOOR – POWER & SYSTEMS PLAN
01-E-105 SCALE 1:100

REV	DATE	BY	SUB	APP	DESCRIPTION
0	06/30/10				SITE ADAPT CONSTRUCTION PLANS

DESIGNED S. WILLIAMS
DRAWN L. KRAVCHUK
CHECKED B. CRAWFORD
IN CHARGE D. WHEELER
DATE 30 JUNE 2010

AFGHAN NATIONAL SECURITY FORCE
COMPREHENSIVE PLAN FOR FACILITIES DEVELOPMENT
MINISTRY OF INTERIOR (MoI) – AFGHAN NATIONAL POLICE
PROVINCIAL FIRE STATION – TYPE-B
FIRE STATION SECOND FLOOR POWER & SYSTEM PLAN

SCALE AS SHOWN
PROJECT NO. 6151-08-0328
01-E-105

GENERAL NOTES:

1. SEE SHEETS 00-E-001 AND 00-E-002 FOR LEGEND, ABBREVIATIONS, AND GENERAL NOTES.

2. COORDINATE MECHANICAL AND PLUMBING EQUIPMENT WITH MECHANICAL AND PLUMBING DRAWINGS.

3. SEE SHEETS 01-E-601 AND 01-E-602 FOR PANELBOARD AND ELECTRICAL POWER RISER DIAGRAM.

4. ALL EXPOSED INTERIOR CONDUITS SHALL BE RGS THREADED (TYPICAL FOR INTERIORS).

5. EXHAUST FAN, ELECTRIC UNIT HEATER AND INLINE FAN DISCONNECTS ARE PROVIDED BY EQUIPMENT MANUFACTURER.

KEY NOTES:

1. PROVIDE A 30A/NF/3P/NEMA 1 DISCONNECT SWITCH.
2. CLEARANCE SHALL BE MAINTAINED AND MARKED AROUND PANELS 'FS2' AND 'FMP4' AS REQUIRED PER 2008 NEC ARTICLE 110. NE TORAGE PERMITTED IN CLEARANCE AREA. NO STORAGE SHALL BE PERMITTED IN CLEARANCE SPACE.
3. REFER TO DETAIL F/01-E-502 FOR FIRESTOPPING.

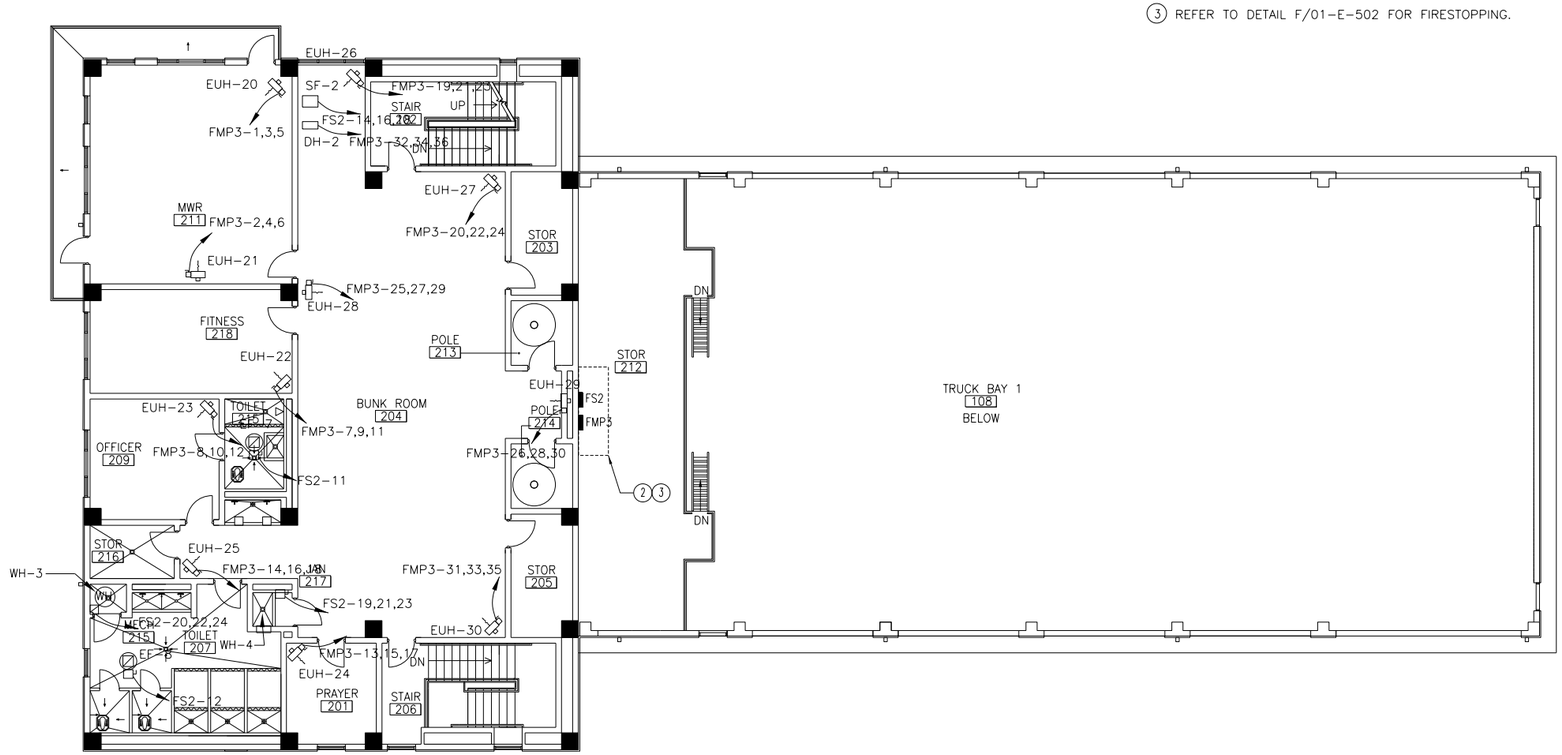

0 1000 2000 4000

SCALE: 1:100

1 FIRE STATION SECOND FLOOR – POWER PLAN /MECHANICAL

01-E-106 SCALE 1:100

REV	DATE	BY	SUB	APP	DESCRIPTION
0	06/30/10				SITE ADAPT CONSTRUCTION PLANS

DESIGNED N. ESKAFANOUS
DRAWN L. KRAVCHUK
CHECKED B. CRAWFORD
IN CHARGE D. WHEELER
DATE 30 JUNE 2010

AFGHAN NATIONAL SECURITY FORCE
COMPREHENSIVE PLAN FOR FACILITIES DEVELOPMENT

MINISTRY OF INTERIOR (MoI) – AFGHAN NATIONAL POLICE
PROVINCIAL FIRE STATION – TYPE-B

FIRE STATION SECOND FLOOR POWER PLAN – MECHANICAL

SCALE AS SHOWN

PROJECT NO. 6151-08-0328

01-E-106

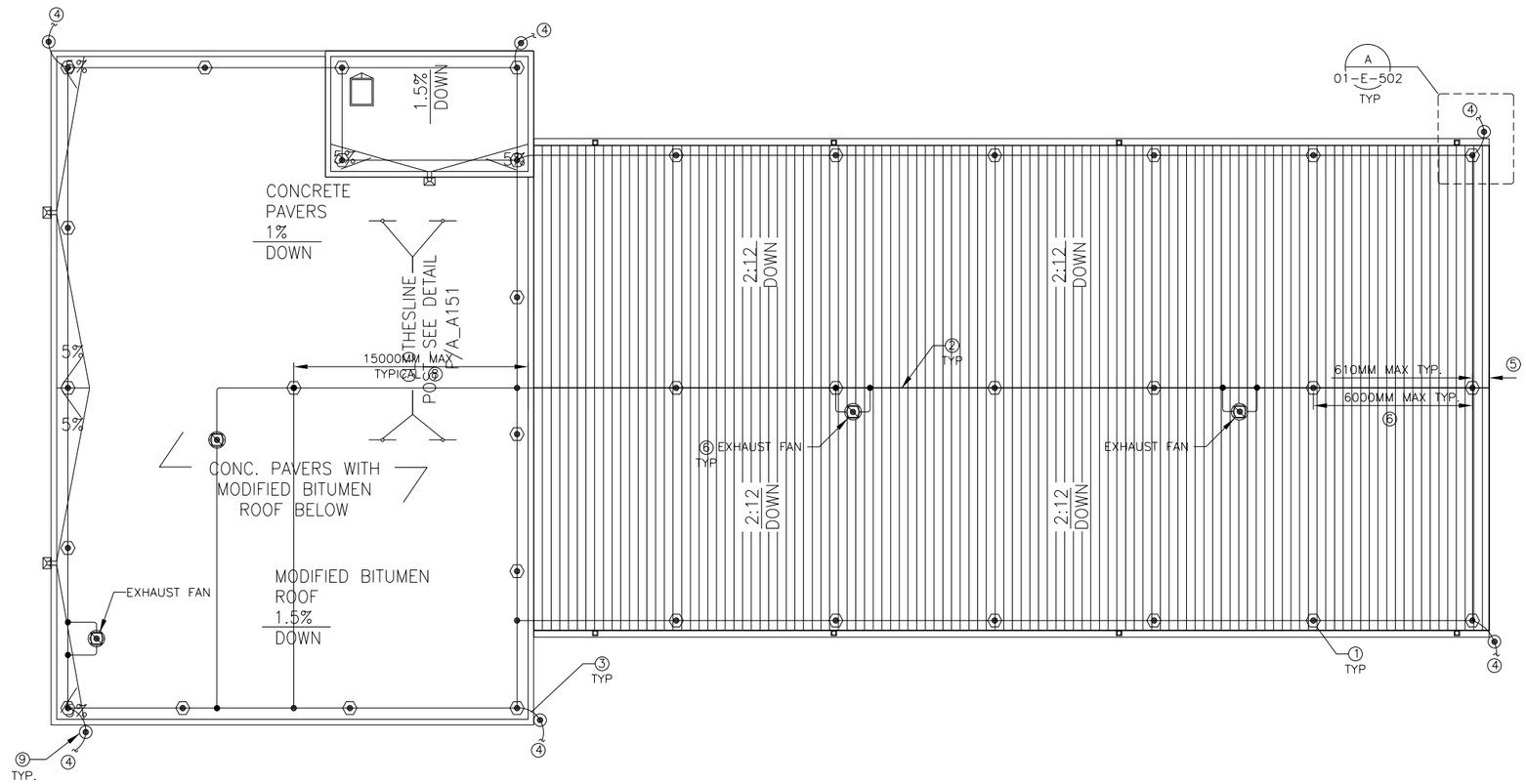

1 ROOF PLAN – LIGHTNING PROTECTION SYSTEM

01-E-107 SCALE 1:100

GENERAL NOTES:

1. SEE SHEET 00-E-001 AND 00-E-002 FOR LEGEND, ABBREVIATIONS AND GENERAL NOTES.
2. CLASS I COMPONENTS SHALL APPLY FOR TO FIRE STATION BUILDING, HEIGHT IS NOT MORE THAN 23M (75 FEET)
3. ALL LIGHTNING PROTECTION CONDUCTORS SHALL BE FASTENED NOT MORE THAN 914.4MM (3 FEET) MAXIMUM SPACING.
4. CONDUCTORS SHALL INTERCONNECT ALL AIR TERMINALS AND SHALL FORM A TWO-WAY PATH FROM EACH AIR TERMINAL HORIZONTALLY OR DOWNWARD TO CONNECTORS WITH GROUND RODS.
5. THE INSTALLATION OF THE LIGHTNING PROTECTION SYSTEM SHALL MEET THE REQUIREMENTS OF NATIONAL FIRE PROTECTION ASSOCIATION NFPA 780 AND UNDER WRITERS LAB UL96/96A.
6. AIR TERMINALS SHALL NOT BE LESS THAN 254MM (10 INCHES) LONG ABOVE THE OBJECT TO BE PROTECTED WHEN THE INTERVAL BETWEEN AIR TERMINALS IS NOT MORE THAN 6M (20 FEET).
7. AIR TERMINALS SHALL BE PLACED ON ALL CHIMNEYS, VENTS, AND ROOF TOP METAL BODIES WHEN SUCH CHIMNEYS, VENTS OR ROOF TOP METAL BODIES ARE NOT WITHIN A ZONE OF PROTECTION.
8. PROVIDE NOT LESS THAN SIX DOWN CONDUCTORS FOR THE FIRE STATION BUILDING.
9. ALL BELOW GRADE BONDS TO THE BURIED LIGHTNING PROTECTION GROUNDING SYSTEM SHALL BE EXOTHERMIC WELDS.
10. RADIUS OF BEND SHALL NOT BE LESS THAN 203MM (8 INCHES).
11. SEE MECHANICAL DRAWINGS FOR EXACT LOCATIONS OF ROOF MOUNTED MECHANICAL EQUIPMENT.
12. PROVIDE #70MM² (#2/0 AWG) COPPER GROUNDING CONDUCTORS FOR THE LIGHTNING PROTECTION GROUNDING SYSTEM. ALL EXTERIOR GROUNDING CONDUCTORS SHALL BE BURIED A MINIMUM OF 762MM (30") BELOW GRADE OR 152.4MM (6") BELOW FROST LINE, WHICHEVER IS GREATER.

MATCH LINE A-A
SEE 2/A_A101 FOR CONTINUATION

KEY NOTES:

① AIR TERMINAL SHALL BE 12.7MM DIAMETER X 457MM LENGTH (1/2"X18") ALUMINUM, 90 DEGREES VERTICAL. SEE DETAIL D/01-E-502

② MAIN CONDUCTORS SHALL BE 28 STRAND, 14 GAUGE CLASS I ALUMINUM ROOF CABLE, 58.9 KG/304.8M (130POUNDS/1000 FEET), 15.875 MM DIAMETER, 70MM² (#1/0 AWG).

③ ALUMINUM DOWN CONDUCTORS SHALL BE BONDED TO COPPER DOWN CONDUCTORS AT LEAST 457MM ABOVE FINISHED GRADE. BI-METALLIC CONNECTIONS SHALL BE USED. SEE DETAILS 01-E-502 FOR BI-METALLIC CONNECTIONS.

④ SEE SHEET 00-E-102 FOR BONDING TO SITE GROUNDING.

⑤ 610MM (2 FEET) MAXIMUM SPACING FROM ROOF EDGE.

⑥ 6000MM (20 FEET) MAXIMUM SPACING FOR 254MM (10 INCHES) AIR TERMINAL HEIGHT.

⑦ PROVIDE AIR TERMINAL ABOVE EACH ROOF MOUNTED EXHAUST FAN.

⑧ 1500MM (50 FEET) MAXIMUM SPACING BETWEEN AIR TERMINALS FOR FLAT ROOF EXCEEDING 15000MM IN WIDTH.

⑨ PROVIDE AND INSTALL 19MMX3048MM (3/4" X 10'-0") COPPER CLAD STEEL GROUND RODS. IF ROCK IS ENCOUNTERED, GROUND ROD MAY BE INSTALLED WITH A MAXIMUM VARIATION OF 30 DEGREES FROM VERTICAL.

REV	DATE	BY	SUB	APP	DESCRIPTION
0	06/30/10				SITE ADAPT CONSTRUCTION PLANS

DESIGNED M. ESTAFANOUS
DRAWN D. OILE
CHECKED B. CRAWFORD
IN CHARGE D. WHEELER
DATE 30 JUNE 2010

AFGHAN NATIONAL SECURITY FORCE
COMPREHENSIVE PLAN FOR FACILITIES DEVELOPMENT

MINISTRY OF INTERIOR (MoI) – AFGHAN NATIONAL POLICE
PROVINCIAL FIRE STATION – TYPE-B

FIRE STATION SECOND FLOOR POWER & MISC PLAN

SCALE AS SHOWN

PROJECT NO. 6151-08-0328

01-E-107

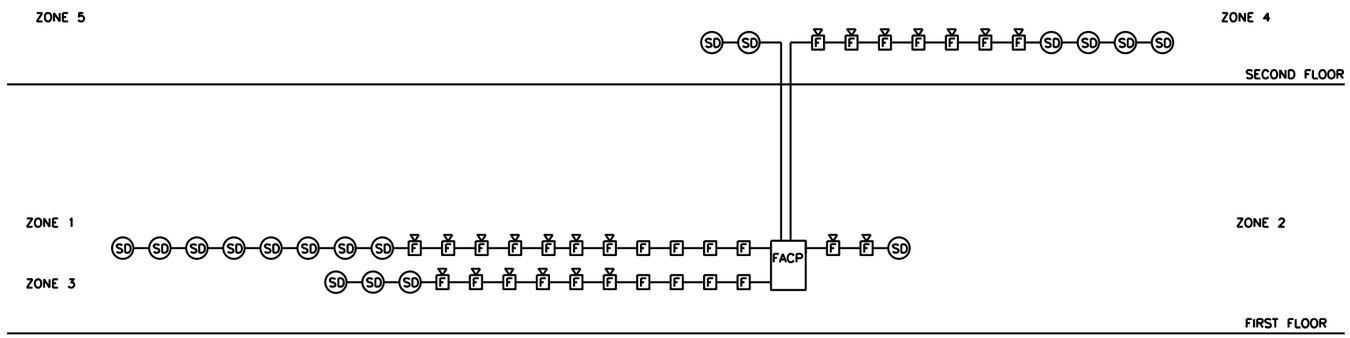

GENERAL NOTES

1. FIRE ALARM SYSTEM IS CONVENTIONAL TYPE, CLASS B, NO LOOP CONFIGURATION.
2. ALL FIRE ALARM CABLING SHALL BE INSTALLED IN MINIMUM 21MM (3/4") CONDUIT.
3. RISER DIAGRAM DOES NOT SHOW ALL WIRING AND CONNECTION AND IS ONLY INTENDED TO INDICATE FUNCTIONALITY REQUIRED. NO T-TAP SHALL BE ALLOWED.
4. CONTRACTOR SHALL PROVIDE END-TO-END CONNECTIVITY TEST FOR FIRE ALARM CONDUCTORS.

FIRE ALARM CONVENTIONAL SYSTEM SCHEDULE

ZONE	DESCRIPTION
1	FIRST FLOOR EXCLUDING KITCHEN, DFAC, TRUCK BAYS
2	FIRST FLOOR – KITCHEN & DFAC
3	FIRST FLOOR – TRUCK BAY 1
4	SECOND FLOOR EXCLUDING THE SLEEPING AREA
5	SECOND FLOOR – SLEEPING AREA

B FIRE ALARM RISER DIAGRAM
01-E-501 NOT TO SCALE

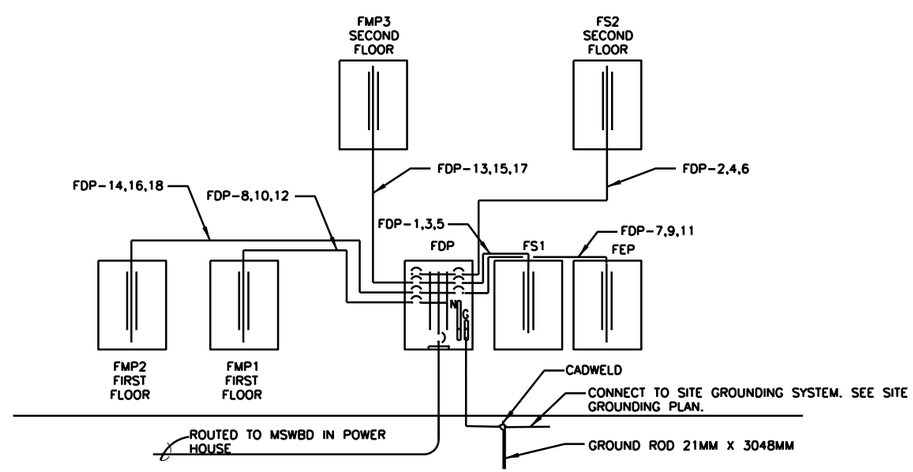

A POWER RISER DIAGRAM
01-E-501 NOT TO SCALE

REV	DATE	BY	SUB	APP	DESCRIPTION
0	06/30/10				SITE ADAPT CONSTRUCTION PLANS

DESIGNED S. WILLIAMS
DRAWN L. KRAVCHUK
CHECKED B. CRAWFORD
IN CHARGE D. WHEELER
DATE 30 JUNE 2010

AFGHAN NATIONAL SECURITY FORCE COMPREHENSIVE PLAN FOR FACILITIES DEVELOPMENT
MINISTRY OF INTERIOR (MoI) – AFGHAN NATIONAL POLICE PROVINCIAL FIRE STATION – TYPE-B
FIRE STATION RISER DIAGRAMS

SCALE AS SHOWN
PROJECT NO. 6151-08-0328
01-E-501

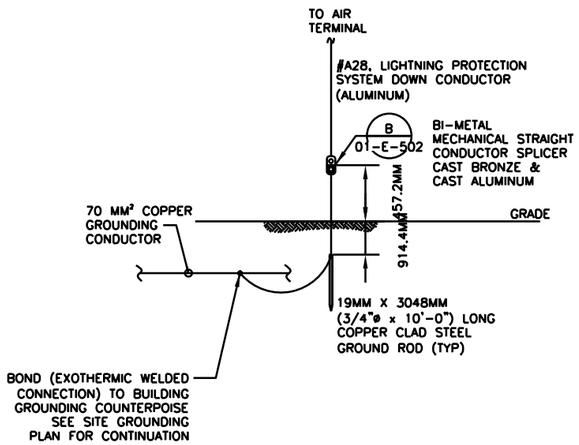

NOTE:
LIGHTNING PROTECTION SYSTEM SHALL BE BONDED TO THE GROUNDING COUNTERPOISE FOR THE FIRE STATION BUILDING SHOWN ON THE SITE GROUNDING PLAN (SHEET 00-E-102) VIA EIGHT DOWN CONDUCTORS.

A | BONDING LIGHTNING PROTECTION TO GROUNDING
01-E-502 | NOT TO SCALE

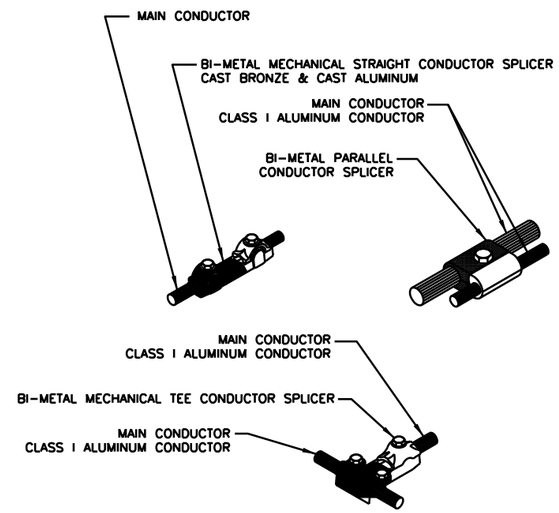

B | BI-METAL CABLE CLAMPS AND SPLICERS
01-E-502 | NOT TO SCALE

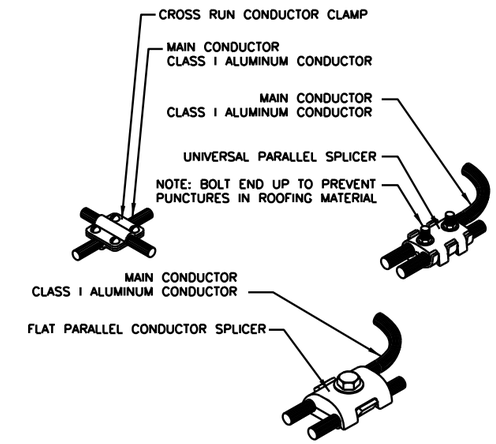

C | CABLE CLAMPS AND SPLICERS
01-E-502 | NOT TO SCALE

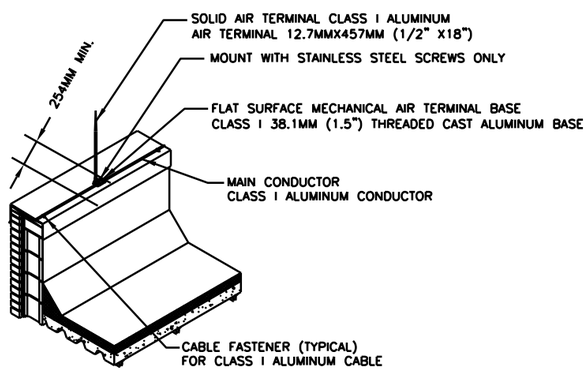

D | AIR TERMINAL DETAIL
01-E-502 | NOT TO SCALE

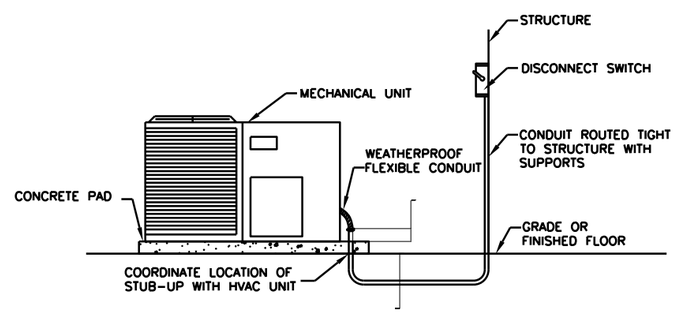

E | HVAC UNIT CONNECTION DETAIL
01-E-502 | NOT TO SCALE

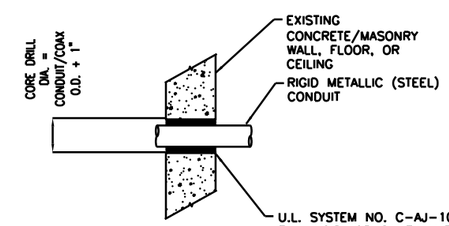

U.L. SYSTEM NO. C-AJ-1008 APPIES WHERE FILL, VOID, OR CAVITY MATERIAL SEALANT IS W.R. GRACE TYPES FS500, FS501, FS503, FS505, FS529, FST601, FST603, FST605, RFS500, RFS501, RFS505, RFST601, &/OR RFST605. SEE U.L. SPECIFICATION SHEET FOR SYSTEM NO. C-AJ-1008 PROVIDED WITH CONSTRUCTION DRAWINGS.

F | FIRESTOP DETAIL
01-E-502 | NOT TO SCALE

REV	DATE	BY	SUB/APP	DESCRIPTION
0	06/30/10			SITE ADAPT CONSTRUCTION PLANS

DESIGNED M. ESTAFANOUS
DRAWN L. KRAVCHUK
CHECKED B. CRAWFORD
IN CHARGE D. WHEELER
DATE 30 JUNE 2010

AFGHAN NATIONAL SECURITY FORCE
COMPREHENSIVE PLAN FOR FACILITIES DEVELOPMENT

MINISTRY OF INTERIOR (MoI) – AFGHAN NATIONAL POLICE
PROVINCIAL FIRE STATION – TYPE-B

FIRE STATION ELECTRICAL DETAILS

SCALE AS SHOWN

PROJECT NO. 6151-08-0328

01-E-502

PANEL: FDP | TYPE: MAIN BREAKER | K.A.I.C: 22,000 AMPS MIN. | MOUNTING: SURFACE
VOLTAGE: 380/220V,3ø,4W | MAINS: 1000 AMPS | ENTRY: BOTTOM | LOCATION: ELECTRICAL RM 108

POLE	TRIP	CONDUCTORS IN MM 2	CONDUIT MM	DESIGNATION	KVA	NO	PHASE ØA	PHASE ØB	PHASE ØC	NO	KVA	DESIGNATION	CONDUIT MM	CONDUCTORS IN MM 2	TRIP	POLE
3	100A	4#50+#16GND	41	PANEL FS1	12.1	1	24.22			2	12.12	PANEL FS2	41	4#50+#16GND	100A	3
					10.6	3		23.82		4	13.22					
					12.1	5			25.62	6	12.92					
3	225A	4#185+#35GND	91	PANEL FEP	32.77	7	61.77			8	29.00	PANEL FMP1	91	4#150+#35GND	200A	3
					30.87	9		59.87		10	29.00					
					33.27	11			62.27	12	29.00					
3	225A	4#185+#35GND	91	PANEL FMP3	30.25	13	51.55			14	21.3	PANEL FMP2	91	4#150+#35GND	200A	3
					30.25	15		51.55		16	21.3					
					30.25	17			51.55	18	21.3					
						19				20						
						21				22						
						23				24						
						25				26						
						27				28						
						29				30						
						31				32						
						33				34						
						35				36						
						37				38		TVSS	21	3#6+1#6GND	30A	3
						39				40						
						41				42						
				TOTAL:			137.54	135.24	139.44		412.22 KVA /.66 X 1.25 =781 AMPS			USE 1000 AMP PANEL		

PANEL: FS1 | TYPE: MAIN LUGS ONLY | K.A.I.C: 18,000 AMPS MIN. | MOUNTING: SURFACE
VOLTAGE: 380/220V,3ø,4W | MAINS: 100 AMPS | ENTRY: BOTTOM | LOCATION: ELECTRICAL RM 108

POLE	TRIP	CONDUCTORS IN MM 2	CONDUIT MM	DESIGNATION	KVA	NO	PHASE ØA	PHASE ØB	PHASE ØC	NO	KVA	DESIGNATION	CONDUIT MM	CONDUCTORS IN MM 2	TRIP	POLE
1	20A	2#4+#4GND	21	LIGHTING	1.1	1	1.8			2	0.7	LIGHTING	21	2#4+#4GND	20A	1
1	20A	2#4+#4GND	21	LIGHTING	2.3	3		3.3		4	1.0	LIGHTING	21	2#4+#4GND	20A	1
1	20A	2#4+#4GND	21	LIGHTING	1.8	5			2.4	6	.6	FANS	21	2#4+#4GND	20A	1
1	20A	2#4+#4GND	21	LIGHTING	1.9	7	2.5			8	.6	FANS	21	2#4+#4GND	20A	1
1	20A	2#4+#4GND	21	LIGHTING	1.6	9		2.2		10	.6	FANS	21	2#4+#4GND	20A	1
1	20A	2#4+#4GND	21	LIGHTING	1.9	11			5.4	12	3.5	REFRIGERATOR	21	2#4+#4GND	20A	1
1	20A	2#4+#4GND	21	RECEPTACLES	1.3	13	4.8			14	3.5	REFRIGERATOR	21	2#4+#4GND	20A	1
1	20A	2#4+#4GND	21	RECEPTACLES	1.3	15		1.7		16	.4	RECEPTACLES	21	2#4+#4GND	20A	1
1	20A	2#4+#4GND	21	FANS	.6	17			1.0	18	.4	RECEPTACLES	21	2#4+#4GND	20A	1
1	20A	2#4+#4GND	21	RECEPTACLES	1.1	19	1.5			20	.4	RECEPTACLES	21	2#4+#4GND	20A	1
1	20A	2#4+#4GND	21	RECEPTACLES	.9	21		1.8		22	.9	RECEPTACLES	21	2#4+#4GND	20A	1
1	20A	2#4+#4GND	21	RECEPTACLES	1.4	23			2.8	24	1.4	RECEPTACLES	21	2#4+#4GND	20A	1
1	20A	2#4+#4GND	21	RECEPTACLES	1.3	25	1.5			26	.2	FANS	21	2#4+#4GND	20A	1
1	20A	2#4+#4GND	21	RECEPTACLES	1.4	27		1.6		28	.2	FANS	21	2#4+#4GND	20A	1
1	20A	2#4+#4GND	21	RECEPTACLES	1.1	29			1.1	30		SPARE			20A	1
1	20A			SPARE								SPARE			20A	1
1	20A			SPARE								SPARE			20A	1
1	20A			SPARE												
				TOTAL:			12.1	10.6	12.7		35.4 KVA /.66 X 1.25 = 67.0 AMPS			USE 100 AMP PANEL		

PANEL: FMP1 | TYPE: MAIN LUGS ONLY | K.A.I.C: 18,000 AMPS MIN. | MOUNTING: SURFACE
VOLTAGE: 380/220V,3ø,4W | MAINS: 225 AMPS | ENTRY: TOP | LOCATION: ELECTRICAL RM 108

POLE	TRIP	CONDUCTORS IN MM 2	CONDUIT MM	DESIGNATION	KVA	NO	PHASE ØA	PHASE ØB	PHASE ØC	NO	KVA	DESIGNATION	CONDUIT MM	CONDUCTORS IN MM 2	TRIP	POLE
3	20A	3#4+1#4GND	21	EUH-1	.85	1	1.7			2	.85	EUH-2	21	3#4+1#4 GND	20A	3
					.85	3		1.7		4	.85					
					.85	5			1.7	6	.85					
3	30A	3#6+1#6GND	21	EUH-3	2.8	7	5.6			8	2.8	EUH-4	21	3#6+1#6 GND	30A	3
					2.8	9		5.6		10	2.8					
					2.8	11			5.6	12	2.8					
3	30A	3#6+1#6GND	21	EUH-5	2.8	13	5.6			14	2.8	EUH-6	21	3#6+1#6 GND	30A	3
					2.8	15		5.6		16	2.8					
					2.8	17			5.6	18	2.8					
3	30A	3#6+1#6GND	21	EUH-7	2.8	19	5.6			20	2.8	EUH-8	21	3#6+1#6 GND	30A	3
					2.8	21		5.6		22	2.8					
					2.8	23			5.6	24	2.8					
3	30A	3#6+1#6GND	21	EUH-9	2.8	25	5.6			26	2.8	EUH-10	21	3#6+1#6 GND	30A	3
					2.8	27		5.6		28	2.8					
					2.8	29			5.6	30	2.8					
3	20A	3#4+1#4GND	21	EUH-11	2.1	31	4.9			32	2.8	EUH-12	21	3#6+1#6 GND	30A	3
					2.1	33		4.9		34	2.8					
					2.1	35			4.9	36	2.8					
3	20A			SPARE		37				38		SPARE			20A	3
						39				40						
						41				42						
				TOTAL:			29.0	29.0	29.0		87.0 KVA /.66 X 1.25 = 164.8 AMPS			USE 225 AMP PANEL		

PANEL: FMP2 | TYPE: MAIN LUGS ONLY | K.A.I.C: 18,000 AMPS MIN. | MOUNTING: SURFACE
VOLTAGE: 380/220V,3ø,4W | MAINS: 225 AMPS | ENTRY: TOP | LOCATION: ELECTRICAL RM 108

POLE	TRIP	CONDUCTORS IN MM 2	CONDUIT MM	DESIGNATION	KVA	NO	PHASE ØA	PHASE ØB	PHASE ØC	NO	KVA	DESIGNATION	CONDUIT MM	CONDUCTORS IN MM 2	TRIP	POLE
3	20A	3#4+1#4 GND	21	EUH-31	.85	1	3.65			2	2.8	EUH-14	21	3#6+1#6GND	30A	3
					.85	3		3.65		4	2.8					
					.85	5			3.65	6	2.8					
3	30A	3#6+1#6GND	21	EUH-15	2.8	7	5.6			8	2.8	EUH-16	21	3#6+1#6GND	30A	3
					2.8	9		5.6		10	2.8					
					2.8	11			5.6	12	2.8					
3	30A	3#6+1#6GND	21	EUH-17	2.8	13	5.6			14	2.8	EUH-18	21	3#6+1#6GND	30A	3
					2.8	15		5.6		16	2.8					
					2.8	17			5.6	18	2.8					
3	30A	3#6+1#6GND	21	EUH-19	2.8	19	5.6			20	2.8	EUH-13	21	3#6+1#6GND	30A	3
					2.8	21		5.6		22	2.8					
					2.8	23			5.6	24	2.8					
3	20A	3#4+1#4GND	21	EUH-32	.85	25	.85			26		SPARE			20A	3
					.85	27		.85		28						
					.85	29			.85	30						
3	20A			SPARE		31				32		SPARE			20A	3
						33				34						
						35				36						
3	20A			SPARE		37				38		SPARE			20A	3
						39				40						
						41				42						
				TOTAL:			21.3	21.3	21.3		63.9 KVA /.66 X 1.25 = 121.0 AMPS			USE 225 AMP PANEL		

PANEL: FEP | TYPE: MAIN LUGS ONLY | K.A.I.C: 18,000 AMPS MIN. | MOUNTING: SURFACE
VOLTAGE: 380/220V,3ø,4W | MAINS: 225 AMPS | ENTRY: TOP | LOCATION: ELECTRICAL RM 108

POLE	TRIP	CONDUCTORS IN MM 2	CONDUIT MM	DESIGNATION	KVA	NO	PHASE ØA	PHASE ØB	PHASE ØC	NO	KVA	DESIGNATION	CONDUIT MM	CONDUCTORS IN MM 2	TRIP	POLE
1	20A	2#4+#4GND	21	EF-1	.7	1	1.4			2	.7	EF-2	21	2#6+#6GND	30A	1
1	20A	2#4+#4GND	21	EF-3	.7	3		1.2		4	.5	EF-4	21	2#10+#6GND	30A	1
1	20A	2#4+#4GND	21	EF-5	.7	5			1.4	6	.7	EF-6	35	2#6+#6GND	30A	1
3	20A	2#4+#4GND	21	SF-1	.47	7	11.47			8	11.0	DH-1	21	3#25+#10GND	70A	3
					.47	9		11.47		10	11.0					
					.47	11			11.47	12	11.0					
1	20A			SPARE		13	2.4			14	2.4	AHU-1, CU-1	21	2#4+#4GND	20A	1
1	20A			SPARE		15				16		SPARE			20A	1
1	20A	2#4+#4GND	21	FIRE ALARM PANEL(NOTE 1)	.5	17			2.9	18	2.4	AHU-2, CU-2	21	2#4+#4GND	20A	1
1	20A			SPARE		19	8.0			20	8.0	WH-1	21	3#16+#6GND	50A	3
1	20A			SPARE		21		8.0		22	8.0					
1	20A			SPARE		23			8.0	24	8.0					
1	20A			SPARE		25	2.0			26	2.0	WH-2	21	3#4+#4GND	20A	3
1	20A			SPARE		27		2.0		28	2.0					
1	20A			SPARE		29			2.0	30	2.0					
1	20A			SPARE		31				32		SPARE			20A	1
1	30A	2#6+#6GND	21	WOOD STOVE KITCHEN	.7	33		.7		34		SPARE			20A	1
1	20A			SPARE		35				36		SPARE			20A	1
3	30A	2#6+#6GND	21	COMP-1	3.75	37	7.5			38	3.75	COMP-2	21	4#6+#6GND	30A	3
					3.75	39		7.5		40	3.75					
					3.75	41			7.5	42	3.75					
				TOTAL:			32.77	30.87	33.27		96.91 KVA /.66 X 1.25 = 183.5 AMPS			USE 225 AMP PANEL		

NOTE 1
PROVIDE LOCKING TYPE CIRCUIT BREAKER FOR FIRE ALARM BREAKER

PANEL: FS2 | TYPE: MAIN LUGS ONLY | K.A.I.C: 18,000 AMPS MIN. | MOUNTING: SURFACE
VOLTAGE: 380/220V,3ø,4W | MAINS: 100 AMPS | ENTRY: BOTTOM | LOCATION: 2ND FLOOR

POLE	TRIP	CONDUCTORS IN MM 2	CONDUIT MM	DESIGNATION	KVA	NO	PHASE ØA	PHASE ØB	PHASE ØC	NO	KVA	DESIGNATION	CONDUIT MM	CONDUCTORS IN MM 2	TRIP	POLE
1	20A	2#4+#4GND	21	LIGHTING	1.6	1	3.4			2	1.8	LIGHTING	21	2#4+#4GND	20A	1
1	20A	2#4+#4GND	21	LIGHTING	1.3	3		3.1		4	1.8	LIGHTING	21	2#4+#4GND	20A	1
1	20A	2#4+#4GND	21	LIGHTING	2.0	5			3.8	6	1.8	LIGHTING	21	2#4+#4GND	20A	1
1	20A	2#4+#4GND	21	FANS	.4	7	1.0			8	.6	FANS	21	2#4+#4GND	20A	1
1	20A	2#4+#4GND	21	LIGHTING	.8	9		1.2		10	.4	FANS	21	2#4+#4GND	20A	1
1	20A	2#4+1#4GND	21	EF-7	.5	11			1.2	12	.7	EF-8	21	2#4+#4GND	20A	1
1	20A	2#4+#4GND	21	RECEPTACLES	1.4	13	1.72			14	.32	SF-2	21	3#4+#4GND	20A	3
1	20A	2#4+#4GND	21	RECEPTACLES	1.3	15		1.62		16	.32					
1	20A			SPARE		17			.62	18	.32					
3	20A	3#4+1#4GND	21	WH-4	2.0	19	6.0			20	4.0	WH-3	21	3#6+1#6GND	30A	3
					2.0	21		6.0		22	4.0					
					2.0	23			6.0	24	4.0					
1	20A			SPARE		25				26		SPARE			20A	1
1	20A	2#4+#4GND	21	RECEPTACLES	1.3	27				28		SPARE			20A	1
1	20A	2#4+#4GND	21	RECEPTACLES	1.3	29			0.9	30		SPARE			20A	1
1	20A			SPARE		31				32		SPARE			20A	1
1	20A			SPARE		33				34		SPARE			20A	1
1	20A			SPARE		35				36		SPARE			20A	1
1	20A			SPARE		37				38		SPARE			20A	1
1	20A			SPARE		39				40		SPARE			20A	1
1	20A			SPARE		41				42		SPARE			20A	1
				TOTAL:			12.12	13.22	12.92		38.26 KVA /.66 X 1.25 = 72.5 AMPS			USE 100 AMP PANEL		

REV	DATE	BY	SUB/APP	DESCRIPTION
0	06/30/10			SITE ADAPT CONSTRUCTION PLANS

DESIGNED S. WILLIAMS
DRAWN L. KRAVCHUK
CHECKED B. CRAWFORD
IN CHARGE D. WHEELER
DATE 30 JUNE 2010

AFGHAN NATIONAL SECURITY FORCE
COMPREHENSIVE PLAN FOR FACILITIES DEVELOPMENT
MINISTRY OF INTERIOR (MoI) – AFGHAN NATIONAL POLICE
PROVINCIAL FIRE STATION – TYPE-B
FIRE STATION ELECTRICAL SCHEDULES

SCALE: AS SHOWN
PROJECT NO. 6151-08-0328

01-E-601

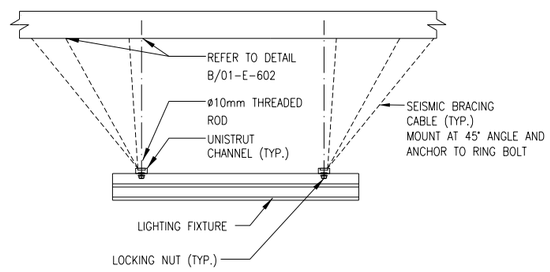

A PENDANT LIGHTING FIXTURE INSTALLATION DETAIL

01-E-602 SCALE N.T.S.

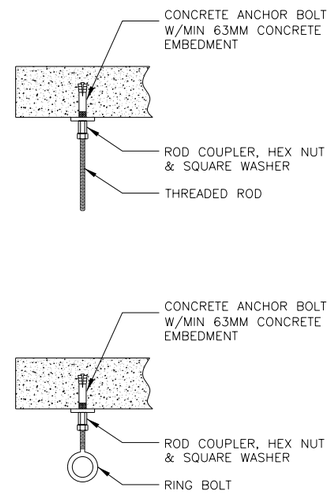

B ANCHOR DETAIL

01-E-602 SCALE N.T.S.

PANEL FMP3 TYPE MAIN LUGS ONLY K.A.I.C 18,000 AMPS MIN. MOUNTING SURFACE

VOLTAGE 380/220V,3ø,4W MAINS 225 AMPS ENTRY BOTTOM LOCATION 2ND FLOOR

POLE	TRIP	CONDUCTORS IN MM 2	CONDUIT MM	DESIGNATION	KVA	NO	PHASE ØA	PHASE ØB	PHASE ØC	NO	KVA	DESIGNATION	CONDUIT MM	CONDUCTORS IN MM 2	TRIP	POLE
3	20A	3#4+1#4GND	21	EUH-20	.85	1	1.7			2	.85	EUH-21	21	3#4+1#4GND	20A	3
					.85	3		1.7		4	.85					
					.85	5			1.7	6	.85					
3	20A	3#4+1#4GND	21	EUH-22	.85	7	1.7			8	.85	EUH-23	21	3#4+1#4GND	20A	3
					.85	9		1.7		10	.85					
					.85	11			1.7	12	.85					
3	20A	3#4+1#4GND	21	EUH-24	.85	13	3.65			14	2.8	EUH-25	21	3#6+1#6GND	30A	3
					.85	15		3.65		16	2.8					
					.85	17			3.65	18	2.8					
3	30A	3#6+1#6GND	21	EUH-26	2.8	19	5.6			20	2.8	EUH-27	21	3#6+1#6GND	30A	3
					2.8	21		5.6		22	2.8					
					2.8	23			5.6	24	2.8					
3	30A	3#6+1#6GND	21	EUH-28	2.8	25	5.6			26	2.8	EUH-29	21	3#6+1#6GND	30A	3
					2.8	27		5.6		28	2.8					
					2.8	29			5.6	30	2.8					
3	30A	3#6+1#6GND	21	EUH-30	2.8	31	12.0			32	9.2	DH-2	27	3#16+1#6GND	55A	3
					2.8	33		12.0		34	9.2					
					2.8	35			12.0	36	9.2					
3	20A			SPARE		37				38		SPARE			20A	3
						39				40						
						41				42						
					TOTAL:		30.25	30.25	30.25	90.75 KVA /.66 X 1.25 = 171.88 AMPS USE 225 AMP PANEL						

LIGHTING FIXTURE SCHEDULE

MARK	LAMPS	VOLTAGE	FIXTURE DESCRIPTION	MOUNTING	NOTES
A	3-T832W	220	ACRYLIC LENS FLUORESCENT WRAPAROUND	SUSPENDED 2500MM AFF.	2X4
AE	3-T832W	220	ACRYLIC LENS FLUORESCENT WRAPAROUND W/BATTERY PACK	SUSPENDED 2500MM AFF.	2X4
B	2-T832W	220	ACRYLIC LENS FLUORESCENT WRAPAROUND	SUSPENDED 2500MM AFF.	2X4
BE	2-T832W	220	ACRYLIC LENS FLUORESCENT WRAPAROUND W/BATTERY PACK	SUSPENDED 2500MM AFF.	2X4
C	2-T832W	220	PENDANT MOUNTED FLUORESCENT STRIP FIXTURE	SUSPENDED 2500MM AFF.	STRIP
C2	3-T832W	220	PENDANT MOUNTED FLUORESCENT STRIP FIXTURE	SUSPENDED 2500MM AFF.	STRIP
D	1-42 DTT	220	BRACKET MOUNTED FLUORESCENT SECURITY FIXTURE WITH ACR. LENS	BRACKET	DAMP LOCATION
E	1-250MH	220	BRACKET MOUNTED HID AREA SECURITY LIGHT	BRACKET AS HIGH AS POSSIBLE	
F	1-250MH	220	INDUSTRIAL HIGH BAY ACRYLIC ENCLOSED HID FIXTURE	SUSPENDED 5500MM AFF.	
G	N/A	220	CEILING FAN PROVIDED BY MECH. INSTALLED BY ELECT.	SUSPENDED 2500MM AFF.	PROVIDE FAN CONTROL SWITCH
X2	LED	220	LED UNIVERSAL MOUNTED EXIT LIGHT. POLYCARBONATE HOUSING.	UNIVERSAL	CONNECT UNSWITCHED

REV	DATE	BY	SUB	APP	DESCRIPTION
0	06/30/10				SITE ADAPT CONSTRUCTION PLANS

DESIGNED J. GILMER
DRAWN L. KRAVCHUK
CHECKED B. CRAWFORD
IN CHARGE D. WHEELER
DATE 30 JUNE 2010

AFGHAN NATIONAL SECURITY FORCE
COMPREHENSIVE PLAN FOR FACILITIES DEVELOPMENT

MINISTRY OF INTERIOR (MoI) – AFGHAN NATIONAL POLICE
PROVINCIAL FIRE STATION – TYPE-B

FIRE STATION ELECTRICAL SCHEDULES

SCALE AS SHOWN

PROJECT NO. 6151-08-0328

01-E-602

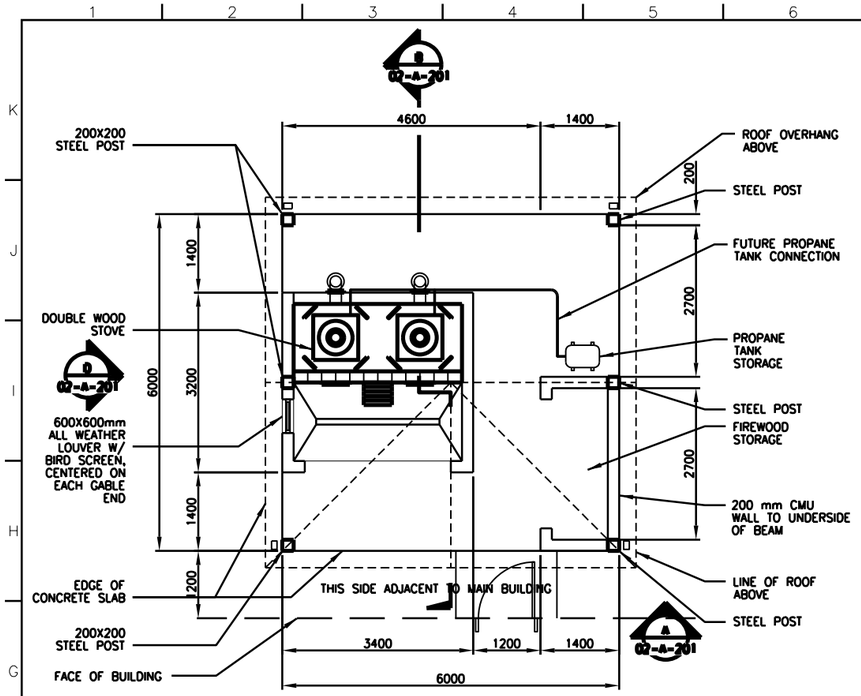

5 WOOD STOVE KITCHEN FLOOR PLAN
02-A-101 1:50

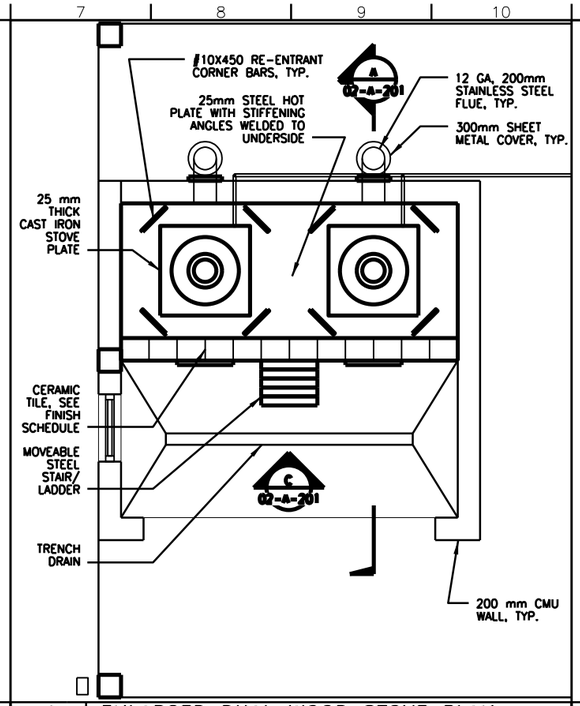

4 ENLARGED DUAL WOOD STOVE PLAN
02-A-101 1:25

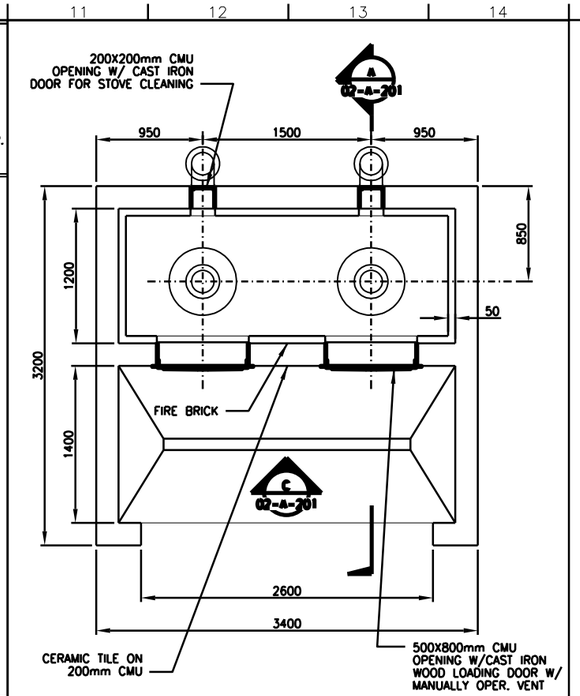

3 ENLARGED WOOD STOVE CUT THRU PLAN
02-A-101 1:25

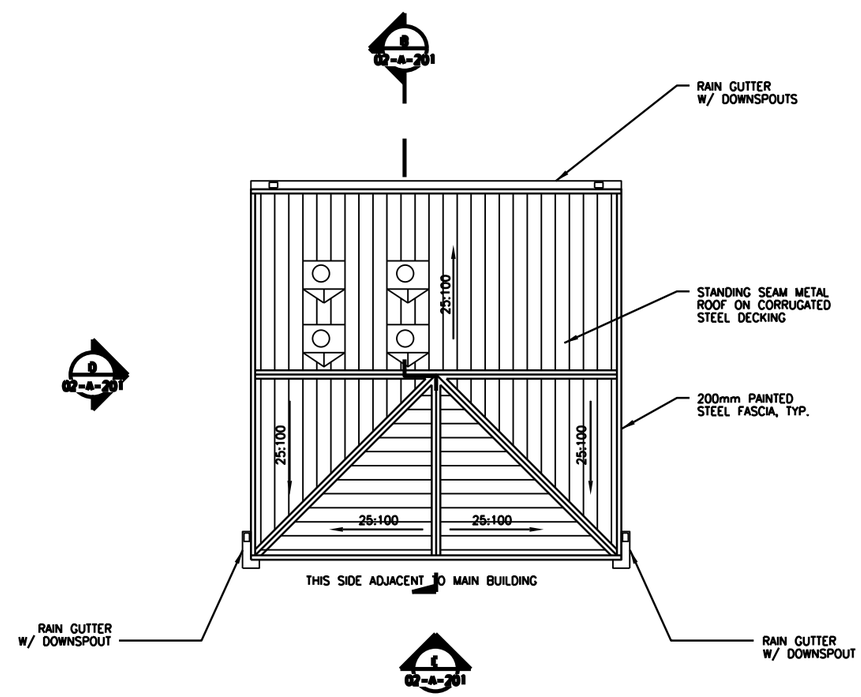

2 WOOD STOVE KITCHEN ROOF PLAN
02-A-101 1:50

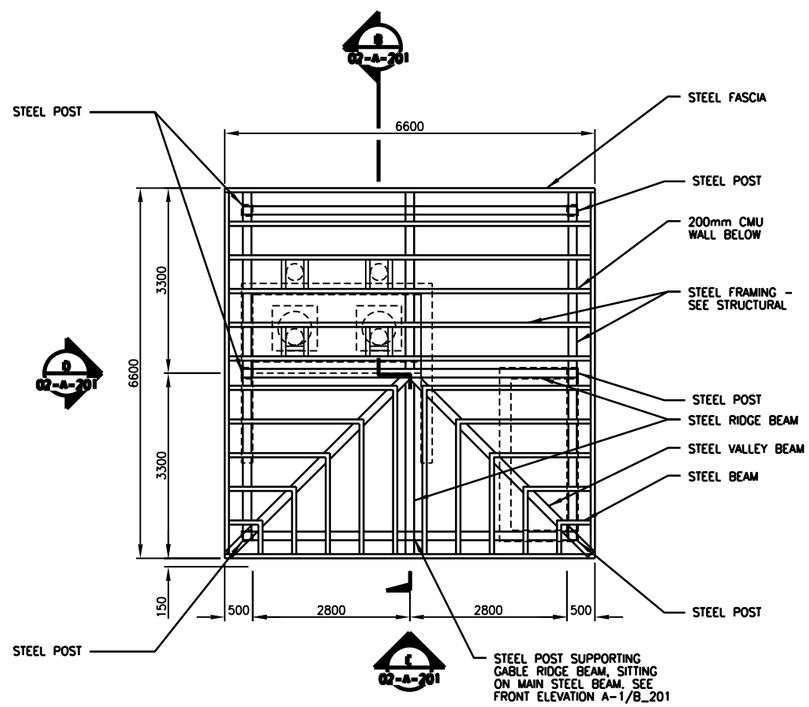

NOTE: SEE STRUCTURAL DRAWINGS FOR ROOF MEMBER SIZES, DIMENSIONS AND ACTUAL LAYOUT.

1 WOOD STOVE KITCHEN ROOF STRUCTURE PLAN
02-A-101 1:50

REV	DATE	BY	SUB	APP	DESCRIPTION
0	06/30/10				SITE ADAPT CONSTRUCTION PLANS

DESIGNED N. SPAHIC
DRAWN N. SPAHIC
CHECKED J. ANDERSON
IN CHARGE D. WHEELER
DATE 30 JUNE 2010

AFGHAN NATIONAL SECURITY FORCE
COMPREHENSIVE PLAN FOR FACILITIES DEVELOPMENT

MINISTRY OF INTERIOR (MoI) - AFGHAN NATIONAL POLICE
PROVINCIAL FIRE STATION - TYPE-B

WOOD STOVE KITCHEN FLOOR PLAN

SCALE AS SHOWN

PROJECT NO. 6151-08-0328

02-A-101

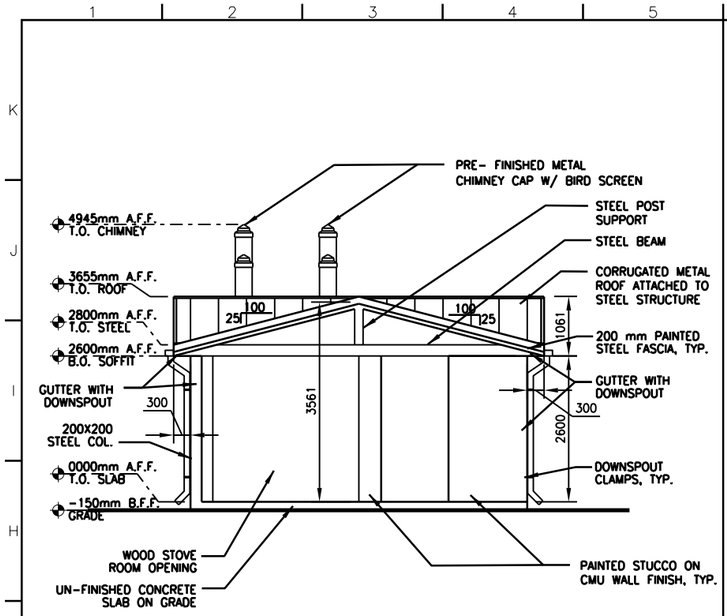

A WOOD STOVE KITCHEN FRONT ELEVATION
02-A-201 1:50

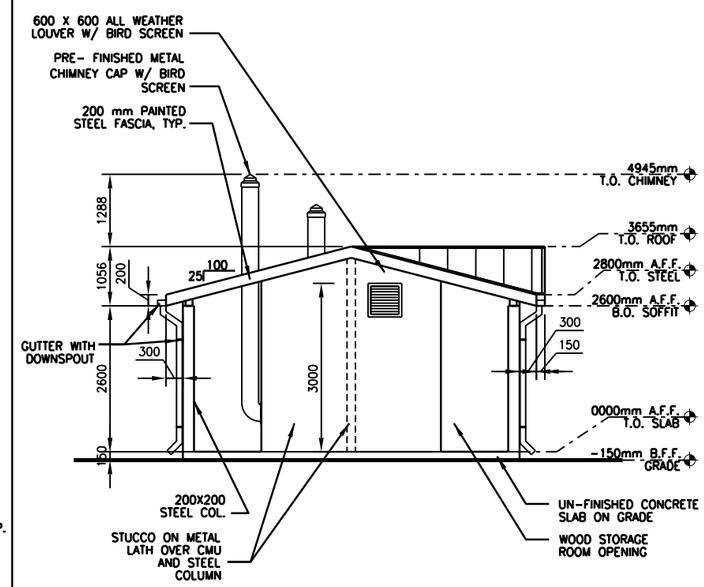

B WOOD STOVE KITCHEN SIDE ELEVATION
02-A-201 1:50

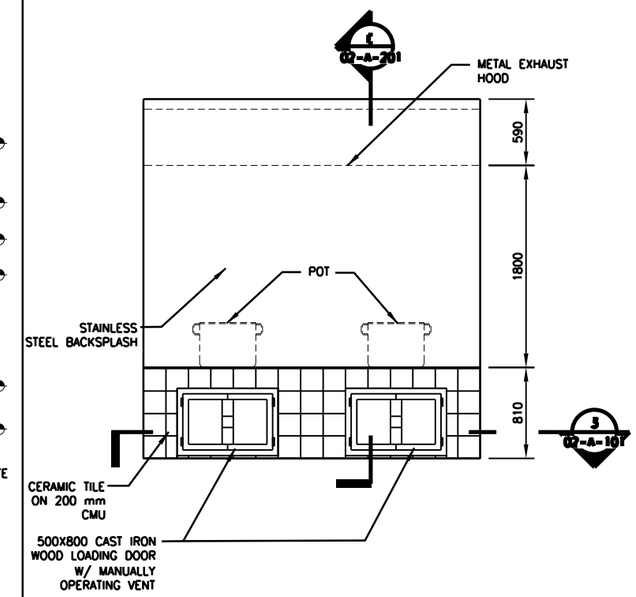

C ENLARGED WOOD STOVE FRONT ELEVATION
02-A-201 1:25

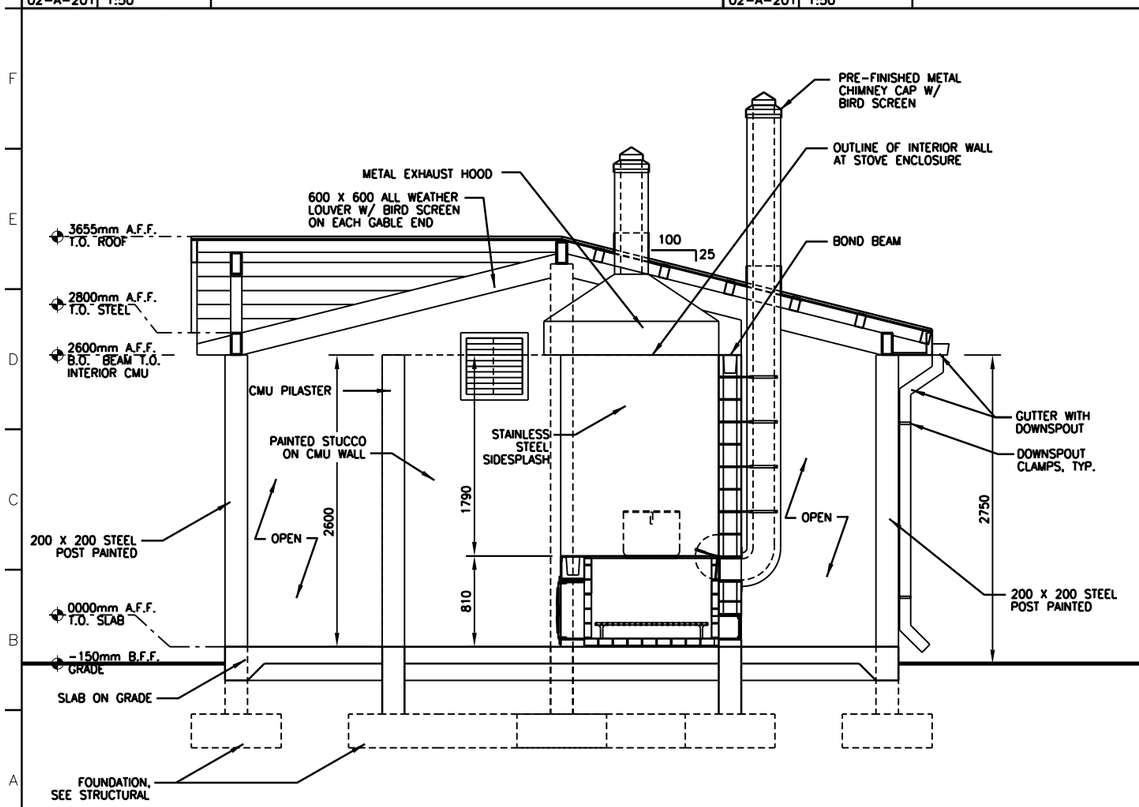

D WOOD STOVE KITCHEN BUILDING SECTION
02-A-201 1:25

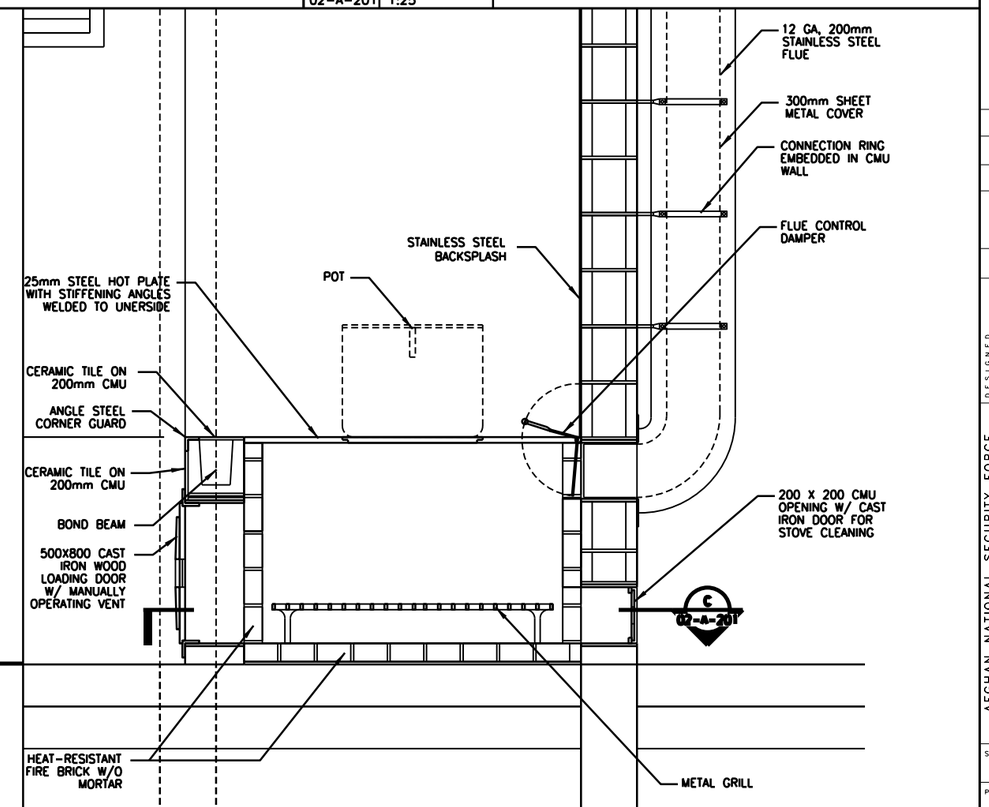

E ENLARGED WOOD STOVE SECTION
02-A-201 1:10

REV	DATE	BY	SUB	APP	DESCRIPTION
0	06/30/10				SITE ADAPT CONSTRUCTION PLANS

DESIGNED N. SPAHIC
DRAWN N. SPAHIS
CHECKED J. ANDERSON
IN CHARGE D. WHEELER
DATE 30 JUNE 2010

AFGHAN NATIONAL SECURITY FORCE COMPREHENSIVE PLAN FOR FACILITIES DEVELOPMENT

MINISTRY OF INTERIOR (MoI) - AFGHAN NATIONAL POLICE PROVINCIAL FIRE STATION - TYPE-B

WOOD STOVE KITCHEN ELEVATIONS & SECTIONS

SCALE AS SHOWN

PROJECT NO. 6151-08-0328

02-A-201

LOUVER SCHEDULE

WINDOW NUMBER	DIMENSION WIDTH	DIMENSION HEIGHT	LOUVER MAT.	LOUVER TYPE		DESCRIPTION
L1	600	600	ALUM	1		METAL LOUVER WEATHER RESISTANT WITH BIRD SCREEN

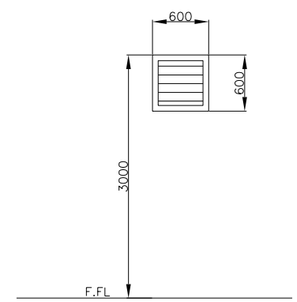

E LOUVER
02-A-501 SCALE: 1:30

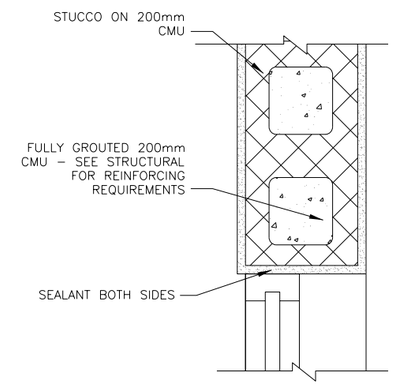

D LOUVER JAMB
02-A-501 SCALE: N.T.S.

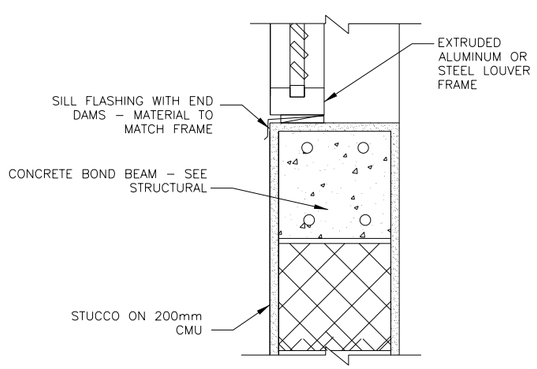

C LOUVER SILL
02-A-501 SCALE: N.T.S.

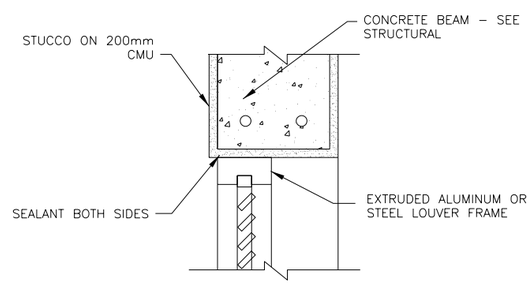

LOUVER TYPE NOTES:

1. LOUVER FRAME SHOULD BE EXTRUDED ALUMINUM OR STEEL.

B LOUVER HEADER
02-A-501 SCALE: N.T.S.

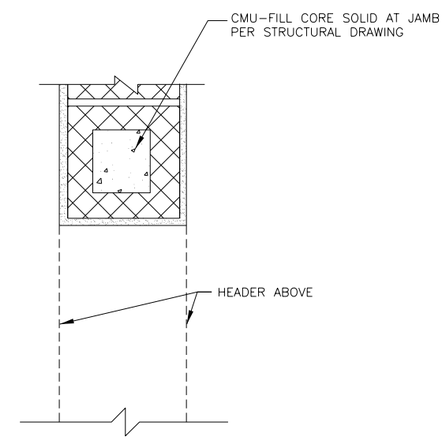

A DOORLESS OPENING JAMB
02-A-501 SCALE: N.T.S.

REV	DATE	BY	SUB	APP	DESCRIPTION
0	06/30/10				SITE ADAPT CONSTRUCTION PLANS

DESIGNED N. SPAHIC
DRAWN C. JUNG
CHECKED J. ANDERSON
IN CHARGE D. WHEELER
DATE 30 JUNE 2010

AFGHAN NATIONAL SECURITY FORCE COMPREHENSIVE PLAN FOR FACILITIES DEVELOPMENT

MINISTRY OF INTERIOR (MoI) – AFGHAN NATIONAL POLICE PROVINCIAL FIRE STATION – TYPE-B

WOOD STOVE LOUVER DETAILS

SCALE AS SHOWN

PROJECT NO. 6151-08-0328

02-A-501

ROOM FINISH SCHEDULE

ROOM NO.	ROOM NAME	FLOOR MATERIAL	BASE MATERIAL	WALL MATERIAL	WALL FINISH	CEILING MATERIAL	CEILING FINISH	CEILING HEIGHT	DOOR, WINDOW & LOUVER FINISH MATERIAL	DOOR, WINDOW & LOUVER FINISH FINISH	REMARKS
101	WOOD STOVE	CONC/S	–	P	P-1	P	P-3	VARIES	MTL	P-4	LOUVER W/ BIRD SCREEN EACH GABLE END + CERAMIC TILE ON STOVE/CT-4
103	FIREWOOD STORAGE	CONC/S	–	P	P-1	–	–	–	–	–	

GENERAL FINISH NOTES/TYPICAL COLORS & MATERIAL SELECTION

FLOORING

CONC/S CONCRETE SEALED AND HARDENED WITH BROOM FINISH

TERRAZZO TILE (TT)
TT-1 AFGHAN LOCAL PRODUCT; 300mm X 300mm WITH SPECIAL POLISH

ENTRY MAT (MAT)
MAT-1 REESE PERFEC CLEAN ALUMINUM HINGE MAT; RECESSED FRAME WITH NO. 546 CARPET INSERTS, METAL FINISH: MIL ALUMINUM; CARPET INSERTS: MAUVE 8616

CERAMIC TILE (CT)
CT-1 R.A.K CERAMIC UAE; 300mm X 300mm UNPOLISHED PORCELAIN

CT-2 AFGHAN LOCAL PRODUCT; 300mm X 600mm POLISHED PORCELAIN

CT-3 AFGHAN LOCAL PRODUCT; 600mm X 1000mm UNPOLISHE PORCELAIN

CT-4 R.A.K CERAMIC UAE;#4/700RBEM-10 200mm X 200mm UNPOLISHE PORCELAIN

CT-5 R.A.K CERAMIC UAE;# 600CPAR-2 200mm X 300mm UNPOLISHE PORCELAIN

BASE TREATMENTS

MARBLE TILE (MT)
MT-1 AFGHAN LOCAL PRODUCT; 75mm X 100mm CROSS SHEEN PORCELAIN MARBLE TILE COVE BASE; #AXXX EMPRESS BLACK

WALL FINISHES

PAINT/EPOXY PAINT (P/EP):
P-1 BRIGHTO PAINTS; # 42 SAND STONE SUPER EMULSION

P-2 BRIGHTO PAINTS; # 127 CAMEO FOR EXTERNAL USE WEATHER SHIELD

P-3 BRIGHTO PAINTS; # X LATEX FOR WATER BASE WALL AND CEILING

P-4 BRIGHTO METALLIC ENAMEL; # 3 LIGHT GRAY SUITABLE FOR USE ON ALL TYPES OF INTERIOR AND EXTERIOR WOOD AND METAL SURFACES.

P-5 BRIGHTO METALLIC ENAMEL; # 42 ASH WHITE SUITABLE FOR USE ON ALL TYPES OF INTERIOR AND EXTERIOR WOOD AND METAL SURFACES.

P-6 BRIGHTO PAINTS; # 12 OFF WHITE

P-7 BRIGHTO PAINTS; #70 ROSE WHITE

P-8 BRIGHTO PAINTS; #69 LILY WHITE

P-9 BRIGHTO PAINTS; #40 PEACH CREAM

CERAMIC TILE (CT):
CT-4 R.A.K CERAMIC UAE;#4/700RBEM-10 200mm X 200mm UNPOLISHE PORCELAIN

CT-5 R.A.K CERAMIC UAE; # 600CPAR-2 200mm X 300mm UN-POLISHE

CEILING FINISHES

PAINTED CEILINGS (P)
P-1 BRIGHTO PAINT; # 12 OFF WHITE

MISCELLANEOUS SURFACES

FINISH SCHEDULE ABBREVIATIONS

AFF	ABOVE FINISHED FLOOR	LAM	PLASTIC LAMINATE
ALSF	ALUMINUM STOREFRONT SYSTEM	MANUF	BY MANUFACTURER
		MAT	ENTRY MAT
ATC	ACOUSTIC TILE CEILING	MR	MOISTURE RESISTANT
CB	CEMENT BOARD	MTL	METAL PANEL
CONC/S	CONCRETE SEALED AND HARDENED WITH BROOM FINISH	MW	MOVABLE WALL
		NA	NOT APPLICABLE
		P	PAINT
CPT	CARPET	PREFIN	PREFINISHED
CT	CERAMIC TILE	RB	RESILIENT BASE
EP	EPOXY PAINT	RBP	RACQUETBALL PANEL
EXPOSED	EXPOSED STRUCTURE	VCT	VINYL COMPOSITION TILE
GN	GENERAL NOTE	MT	MARBLE TILE
GWB	GYPSUM WALL BOARD	MTD	METALLIC DOOR
HM	HOLLOW METAL	WD	WOOD DOOR
		TT	TERRAZZO TILE
		PVC	POLYVINYL

GENERAL NOTES

1. THE MANUFACTURER'S NAMES AND THEIR PRODUCTS REFERENCED ONLY INDICATE THE COLOR, TEXTURE, AND PATTERN REQUIRED FOR THE MATERIALS LISTED. THE PRODUCTS FURNISHED SHALL MEET THE COLOR, TEXTURE, AND PATTERN INDICATED AS WELL AS THE MATERIAL QUALITY AND PERFORMANCE SPECIFIED IN THE APPLICABLE TECHNICAL SPECIFICATIONS. THE USE OF MANUFACTURER'S NAMES AND PRODUCTS DO NOT PRECLUDE THE USE OF OTHER MANUFACTURER'S PRODUCTS OF APPROVED EQUAL COLOR, TEXTURE, AND/OR PATTERN IF ALL OTHER REQUIREMENTS ARE MET.
2. ALL VISIBLE GRILLES, DIFFUSERS, AND OTHER MECHANICAL RELATED FINISH OPENING DEVICES INCLUDING FIRE ALARMS SHALL BE PAINTED TO MATCH COLOR OF ADJACENT SURFACE.
3. REFER TO APPROPRIATE ARCHITECTURAL DRAWINGS AND DETAILS TO PROPERLY ASSESS THE FULL EXTENT OF WORK REQUIRED. SPECIFICALLY REFER TO THE REFLECTED CEILING PLANS AND BUILDING SECTIONS TO DETERMINE HEIGHTS OF REQUIRED WALL MATERIALS, SPECIAL CONDITIONS AND STRUCTURES, ETC.
4. REFER TO EXTERIOR ELEVATIONS FOR EXTERIOR FINISH SELECTIONS.

NOTE:
NOT ALL FINISHES APPLY TO ALL BUILDINGS.

REV	DATE	BY	SUB	APP	DESCRIPTION
0	06/30/10				SITE ADAPT CONSTRUCTION PLANS

DESIGNED N. SPAHIC
DRAWN C. JUNG
CHECKED J. ANDERSON
IN CHARGE D. WHEELER
DATE 30 JUNE 2010

AFGHAN NATIONAL SECURITY FORCE
COMPREHENSIVE PLAN FOR FACILITIES DEVELOPMENT
MINISTRY OF INTERIOR (MoI) – AFGHAN NATIONAL POLICE
PROVINCIAL FIRE STATION – TYPE-B
WOOD STOVE FINISH SCHEDULE

SCALE AS SHOWN
PROJECT NO. 6151-08-0328
02-A-601

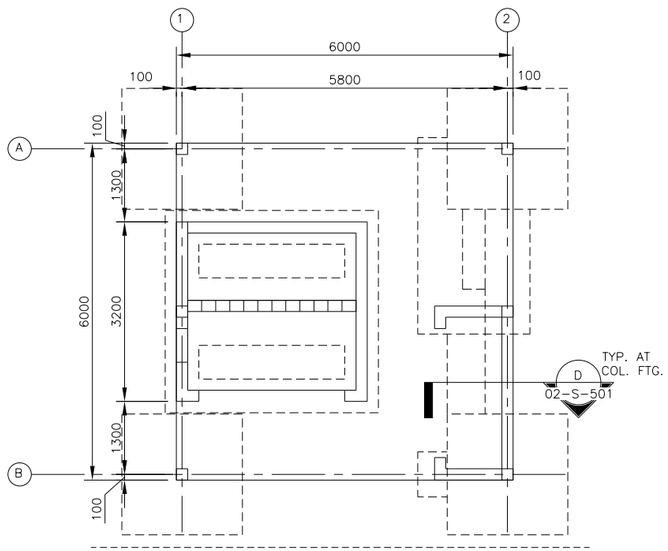

1 FOUNDATION PLAN

02-S-101 SCALE 1:50

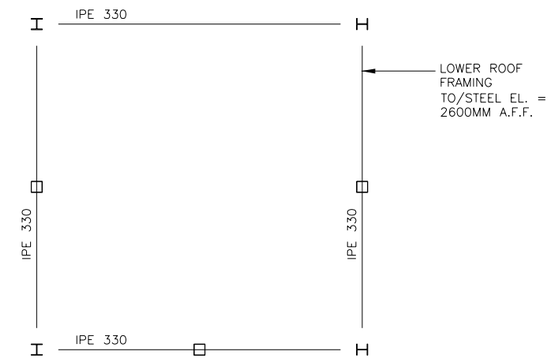

3 LOWER ROOF FRAMING PLAN

02-S-101 SCALE 1:50

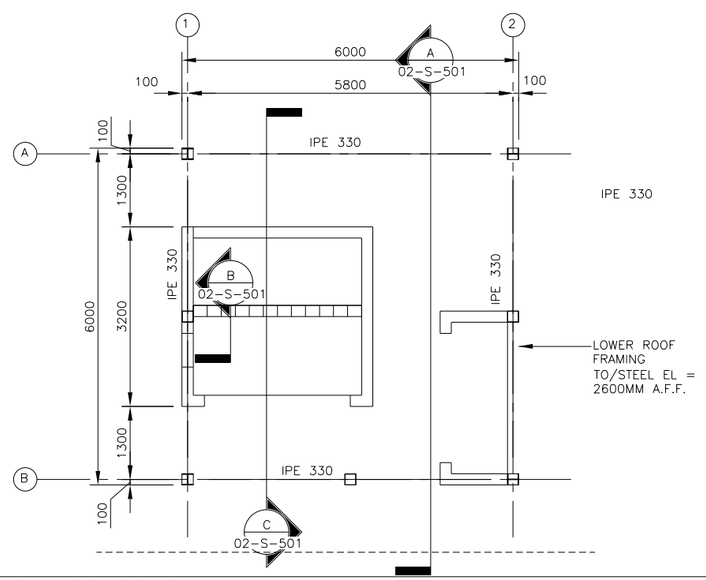

2 STEEL FRAMING PLAN

02-S-101 SCALE 1:50

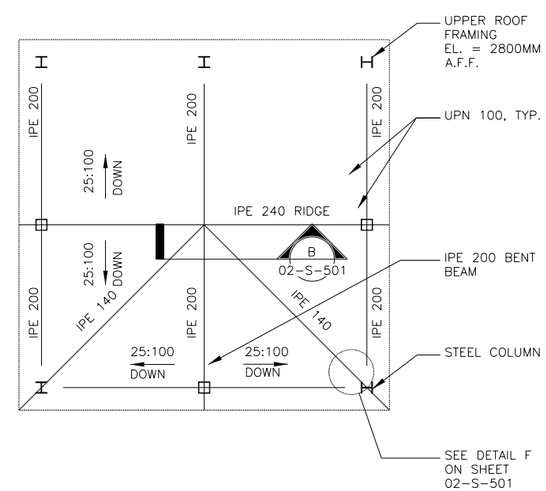

4 UPPER ROOF FRAMING PLAN

02-S-101 SCALE 1:50

REV	DATE	BY	SUB	APP	DESCRIPTION
0	06/30/10				SITE ADAPT CONSTRUCTION PLANS

DESIGNED V. STEGMEIR
DRAWN M. LORENZ
CHECKED M. GARVER
IN CHARGE D. WHEELER
DATE 30 JUNE 2010

AFGHAN NATIONAL SECURITY FORCE
COMPREHENSIVE PLAN FOR
FACILITIES DEVELOPMENT

MINISTRY OF INTERIOR (MoI) – AFGHAN NATIONAL POLICE
PROVINCIAL FIRE STATION – TYPE-B

WOOD STOVE KITCHEN STRUCTURAL PLANS

SCALE
AS SHOWN

PROJECT NO.
6151-08-0328

02-S-101

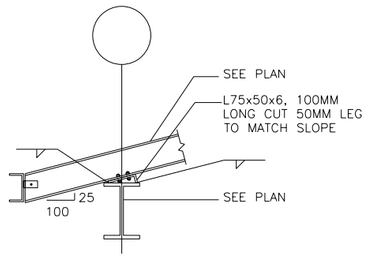

A SECTION AT SLOPED CONN.
02-S-501 SCALE 1:10

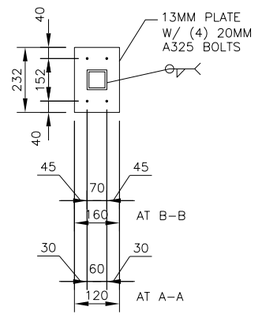

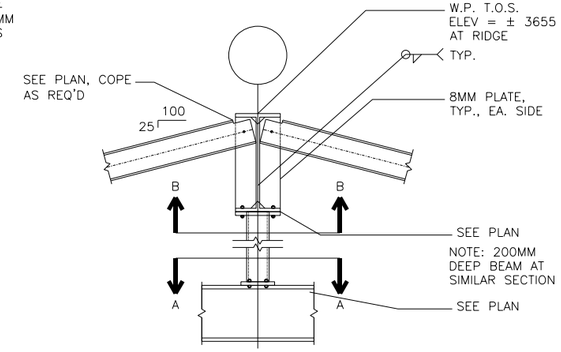

B SECTION
02-S-501 SCALE 1:10

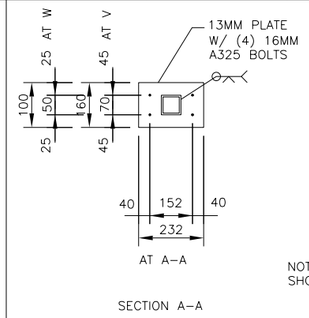

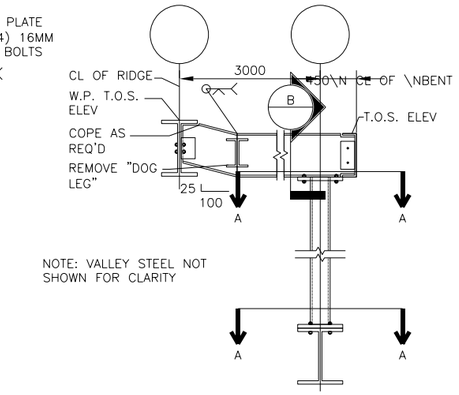

C SECTION
02-S-501 SCALE 1:10

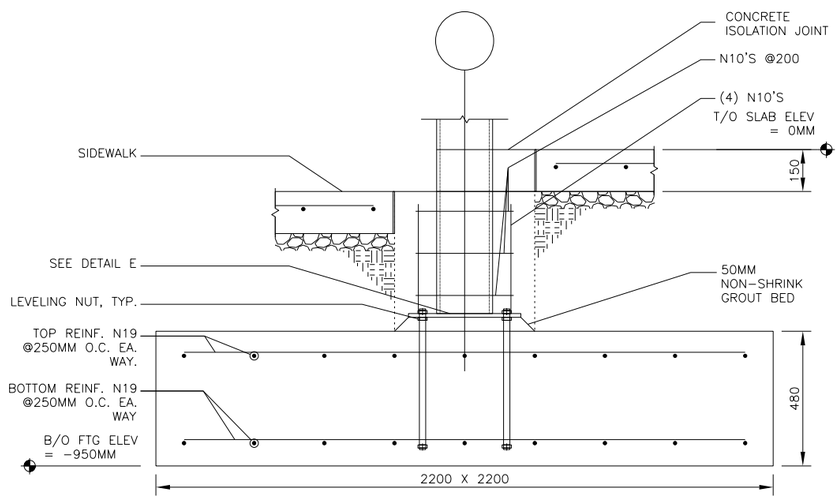

D SECTION AT COLUMN FOOTING
02-S-501 SCALE 1:10

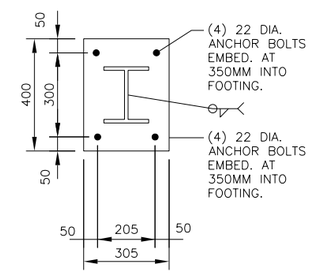

E DETAIL AT PLATE
02-S-501 SCALE 1:10

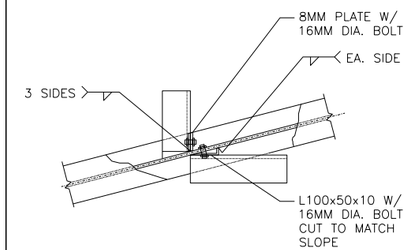

F DETAIL AT GABLE FRAMING
02-S-501 SCALE 1:10

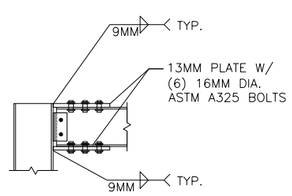

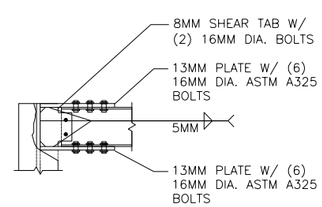

NOTE:
BEAMS FRAMING INTO COLUMNS AT 90° NOT SHOWN FOR CLARITY

G MOMENT CONNECTION DETAILS
02-S-501 SCALE 1:10

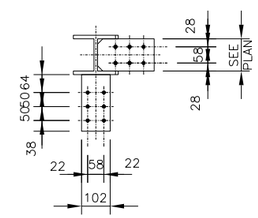

H TYP. MOMENT CONN. PLATE
02-S-501 SCALE 1:10

REV	DATE	BY	SUB	APP	DESCRIPTION
0	06/30/10				SITE ADAPT CONSTRUCTION PLANS

DESIGNED V. STEGMEIR
DRAWN M. LORENZ
CHECKED M. GARVER
IN CHARGE D. WHEELER
DATE 30 JUNE 2010

AFGHAN NATIONAL SECURITY FORCE COMPREHENSIVE PLAN FOR FACILITIES DEVELOPMENT

MINISTRY OF INTERIOR (MoI) – AFGHAN NATIONAL POLICE PROVINCIAL FIRE STATION – TYPE-B

WOOD STOVE KITCHEN STRUCTURAL DETAILS

SCALE AS SHOWN

PROJECT NO. 6151-08-0328

02-S-501

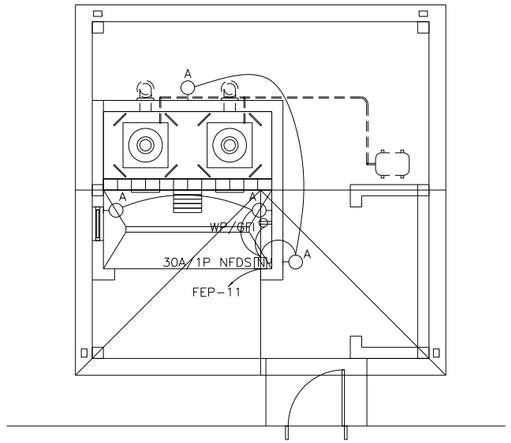

1 WOOD STOVE ELECTRICAL PLAN

02-E-101 SCALE 1:50

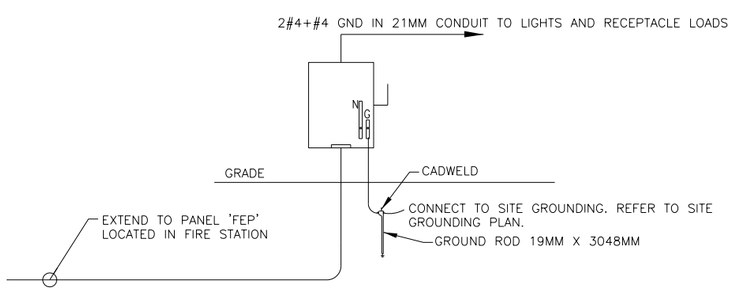

A POWER RISER DIAGRAM

02-E-101 SCALE 1:50

LIGHTING FIXTURE SCHEDULE

MARK	LAMPS	VOLTAGE	FIXTURE DESCRIPTION	MOUNTING	NOTES
A	1-75MH	220	WALL MOUNTED HID AREA FLOOD LIGHT WITH DARK BRONZE ALUMINUM HOUSING, HPF BALLAST AND ACRYLIC LENS.	BRACKET 8'-0" AFF.	

NOTE

1. MOUNT TWO TYPE A FIXTURES TO POINT UP FOR INDIRECT LIGHTING AND TWO TO POINT DOWN AT COOKING SURFACE.

REV	DATE	BY	SUB	APP	DESCRIPTION
0	06/30/10				SITE ADAPT CONSTRUCTION PLANS

DESIGNED J. Gilmer
DRAWN L. KRAVCHUK
CHECKED B. CRAWFORD
IN CHARGE D. WHEELER
DATE 30 JUNE 2010

AFGHAN NATIONAL SECURITY FORCE COMPREHENSIVE PLAN FOR FACILITIES DEVELOPMENT

MINISTRY OF INTERIOR (MoI) – AFGHAN NATIONAL POLICE PROVINCIAL FIRE STATION – TYPE-B

WOOD STOVE KITCHEN ELECTRICAL PLAN

SCALE AS SHOWN

PROJECT NO. 6151-08-0328

02-E-101

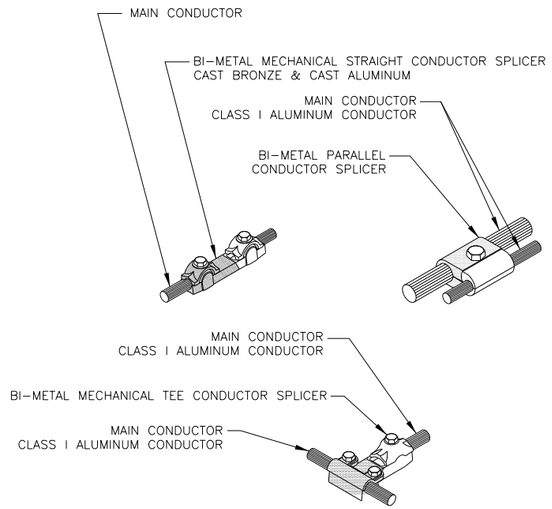

A | BI-METAL CABLE CLAMPS AND SPLICERS
02-E-102 | NOT TO SCALE

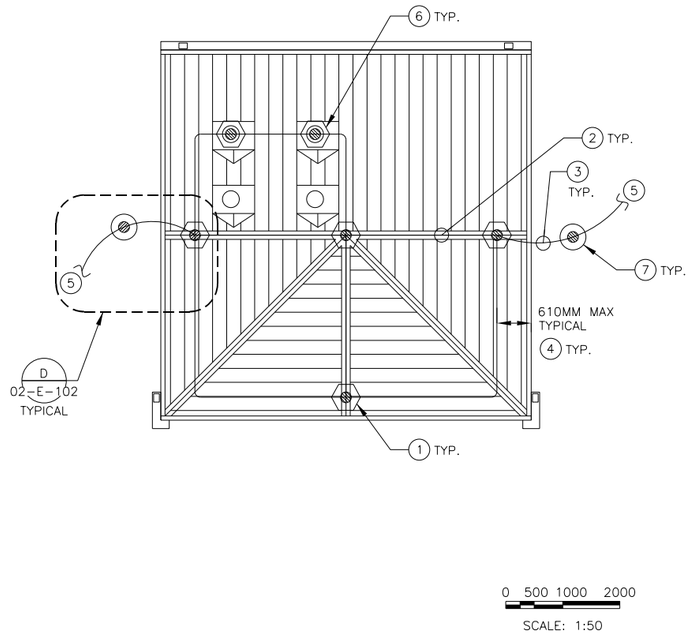

1 | WOOD STOVE LIGHTNING PROTECTION PLAN
02-E-102 | SCALE 1:50

GENERAL NOTES:

1. SEE SHEETS 00-E-001 AND 00-E002 FOR LEGEND, ABBREVIATIONS AND GENERAL NOTES.
2. CLASS I COMPONENTS SHALL APPLY FOR THE WOOD STOVE KITCHEN, HEIGHT IS NOT MORE THAN 23M (75 FEET).
3. ALL LIGHTNING PROTECTION CONDUCTORS SHALL BE FASTENED NOT MORE THAN 914.4MM (3 FEET) MAXIMUM SPACING.
4. CONDUCTORS SHALL INTERCONNECT ALL AIR TERMINALS AND SHALL FORM A TWO-WAY PATH FROM EACH AIR TERMINAL HORIZONTALLY OR DOWNWARD TO CONNECTORS WITH GROUND RODS.
5. THE INSTALLATION OF THE LIGHTNING PROTECTION SYSTEM SHALL MEET THE REQUIREMENTS OF NATIONAL FIRE PROTECTION ASSOCIATION 780 AND UNDER WRITERS LAB UL96/96A.
6. AIR TERMINALS SHALL NOT BE LESS THAN 254MM (10 INCHES) LONG ABOVE THE OBJECT TO BE PROTECTED WHEN THE INTERVAL BETWEEN AIR TERMINALS IS NOT MORE THAN 6M (20 FEET).
7. AIR TERMINALS SHALL BE PLACED ON ALL CHIMNEYS, VENTS, AND ROOF TOP METAL BODIES WHEN SUCH CHIMNEYS, VENTS OR ROOF TOP METAL BODIES ARE NOT WITHIN A ZONE OF PROTECTION.
8. AT LEAST TWO DOWN CONDUCTORS SHALL BE INSTALLED.
9. RADIUS OF BEND SHALL NOT BE LESS THAN 203MM (8 INCHES).
10. PROVIDE #70MM² (#2/0 AWG) COPPER GROUNDING CONDUCTORS FOR THE LIGHTNING PROTECTION GROUNDING. ALL EXTERIOR GROUNDING CONDUCTORS SHALL BE BURIED A MINIMUM OF 762MM (30") BELOW GRADE OR 152.4MM (6") BELOW FROST LINE, (WHICHEVER IS GREATER).

KEY NOTES:

1. AIR TERMINAL SHALL BE 12.7MMX457MM (1/2" X 18") ALUMINUM, 90 DEGREES VERTICAL. SEE DETAIL B/02-E-102.
2. MAIN CONDUCTORS SHALL BE (28 STRAND, 14 GAUGE CLASS I ALUMINUM ROOF CABLE, 58.9 KG/ 304.8M (130 POUNDS/1000 FEET), 15.875 MM DIAMETER, 70MM² (#1/0 AWG)).
3. ALUMINUM DOWN CONDUCTORS SHALL BE CONNECTED TO COPPER DOWN CONDUCTOR AT LEAST 457MM (18 INCHES) ABOVE GRADE LEVEL. BIMETALLIC CONNECTORS WILL BE USED. SEE DETAILS ON THIS SHEET FOR BIMETALLIC CONNECTORS.
4. 610 MM (2 FEET) MAXIMUM SPACING FROM RIDGE END.
5. SEE SHEET 00-E-102 FOR CONTINUATION TO SITE GROUNDING PLAN.
6. PROVIDE AIR TERMINAL ABOVE EACH CHIMNEY.
7. PROVIDE AND INSTALL 19MMX3048MM (3/4" X 10'-0") COPPER CLAD STEEL GROUND RODS. IF ROCK IS ENCOUNTERED, GROUND ROD MAY BE INSTALLED WITH A MAXIMUM VARIATION OF 30 DEGREES FROM VERTICAL.

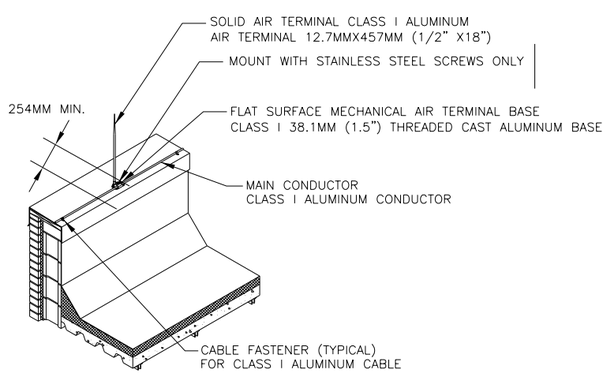

B | AIR TERMINAL DETAIL
02-E-102 | NOT TO SCALE

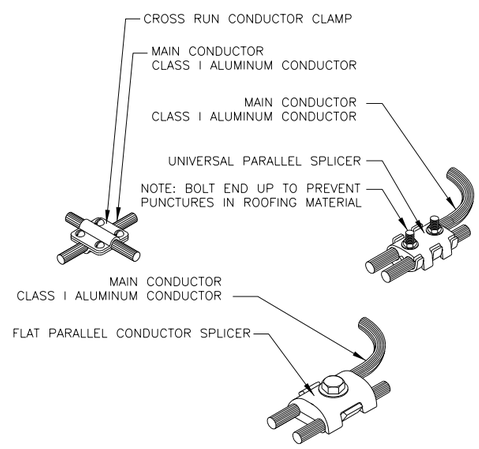

C | CABLE CLAMPS AND SPLICERS
02-E-102 | NOT TO SCALE

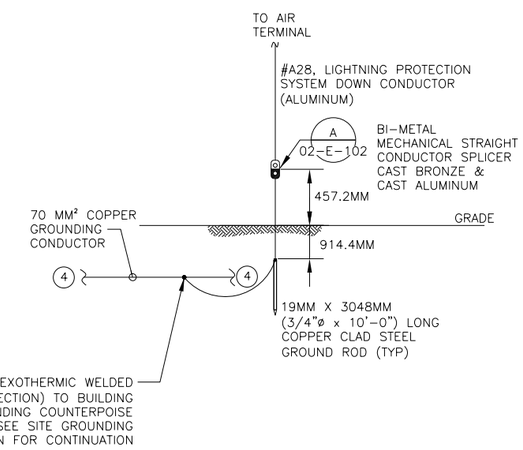

D | BONDING LIGHTNING PROTECTION TO GROUND
02-E-102 | NOT TO SCALE

REV	DATE	BY	SUB	APP	DESCRIPTION
0	06/30/10				SITE ADAPT CONSTRUCTION PLANS

DESIGNED M. ESTAFANOUS
DRAWN L. KRAVCHUK
CHECKED B. CRAWFORD
IN CHARGE D. WHEELER
DATE 30 JUNE 2010

AFGHAN NATIONAL SECURITY FORCE
COMPREHENSIVE PLAN FOR
FACILITIES DEVELOPMENT

MINISTRY OF INTERIOR (MoI) – AFGHAN NATIONAL POLICE
PROVINCIAL FIRE STATION – TYPE-B

WOOD STOVE KITCHEN LIGHTNING PROTECTION PLAN

SCALE
AS SHOWN

PROJECT NO.
6151-08-0328

02-E-102

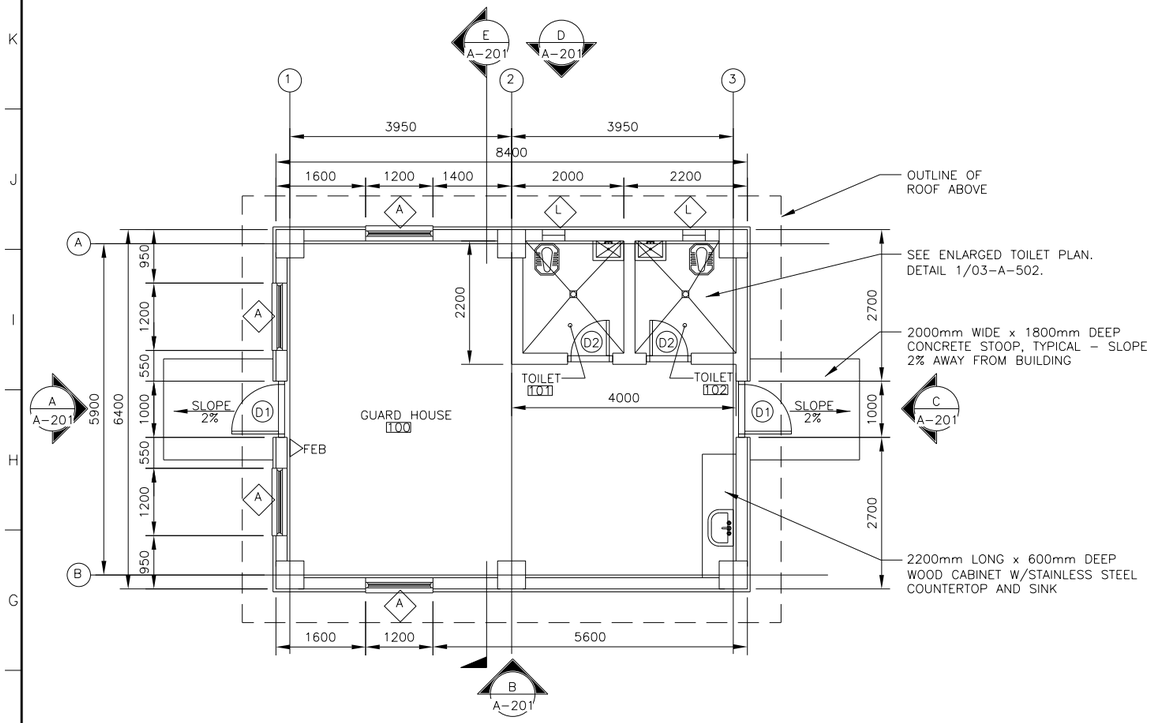

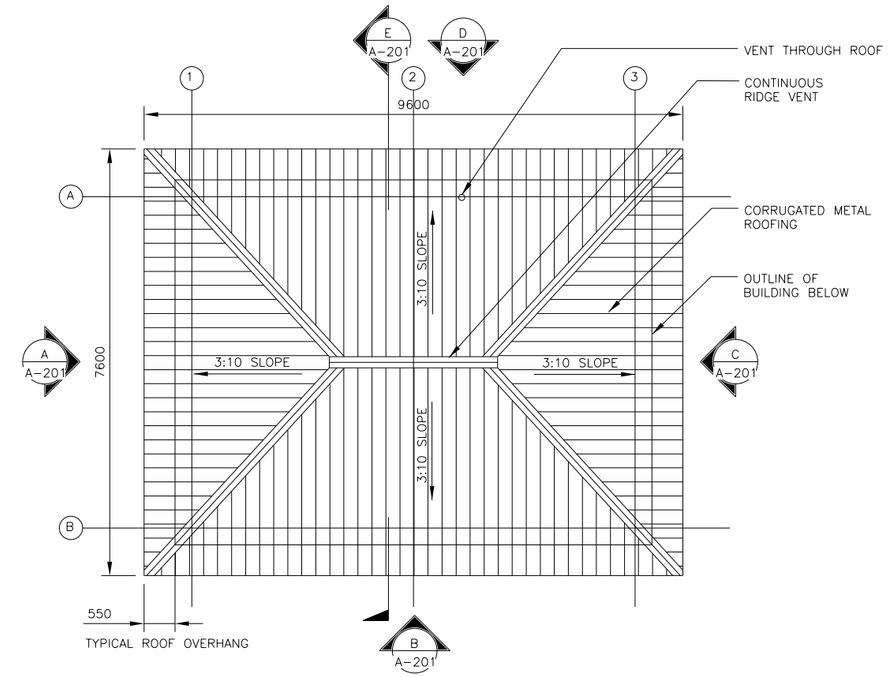

LEGEND:

- (X) DOOR TYPE, SEE SHEET 03-A-601
- ◇X WINDOW TYPE, SEE SHEET 03-A-601
- ▷FEB FIRE EXTINGUISHER AND WALL MOUNTED BRACKET
- ⊠ FD FLOOR DRAIN

NOTES:

TOILETS ARE ORIENTED NORTH – SOUTH IF BUILDING ROTATES ON SITE, ROTATE TOILETS TO MAINTAIN NORTH – SOUTH ORIENTATION.

GENERAL NOTES:

1. WALL FINISHES SHALL BE AS INDICATED IN SCHEDULE ON 03-A-602.
2. SURFACES TO BE PAINTED SHALL BE CLEAN AND FREE OF FOREIGN MATTER BEFORE APPLICATION F PAINT. CLEANING SHALL BE SCHEDULED SO THAT DUST AND OTHER CONTAMINANTS WILL NOT FALL ON WET, NEWLY PAINTED SURFACES.
3. CONCRETE AND INTERIOR MASONRY SURFACES GROUTED SOLID SHALL BE ALLOWED TO DRY AT LEAST 30 DAYS BEFORE PAINTING.
4. PAINTS CONTAINING LEAD IN EXCESS OF 0.6 PERCENT BY WEIGHT OF THE TOTAL NONVOLATILE CONTENT SHALL NOT BE USED.
5. MERCURIAL FUNGICIDES SHALL NOT BE USED IN OIL-BASE PAINT.
6. REMOVE LOOSE DIRT AND CLEAN SURFACES BEFORE PAINTING. APPLY PAINT TO INTERIOR STRUCTURAL RIGID FRAMING AND CEILINGS AND TEST FOR ADHESION. PRIMER COAT FOR MASONRY INITIAL FIRST COAT WITH AN ACRYLIC LATEX PAINT FOR EXTERIOR SURFACES AND A SECOND COAT WITH A WATER REPELLENT ACRYLIC LATEX PAINT.
7. GROUND FAULT CIRCUIT INTERRUPTER DUPLEX RECEPTACLE AT CABINET SHALL BE PLACED ON TWO SEPARATE AND DEDICATED CIRCUITS.

1 GUARD HOUSE FLOOR AND ROOF PLANS

03-A-101 SCALE: 1:50

REV	DATE	BY	SUB	APP	DESCRIPTION
0	06/30/10				SITE ADAPT CONSTRUCTION PLANS

DESIGNED N. SPANIC
DRAWN C. JUNG
CHECKED J. ANDERSON
IN CHARGE D. WHEELER
DATE 30 JUNE 2010

AFGHAN NATIONAL SECURITY FORCE COMPREHENSIVE PLAN FOR FACILITIES DEVELOPMENT

MINISTRY OF INTERIOR (MoI) – AFGHAN NATIONAL POLICE PROVINCIAL FIRE STATION – TYPE-B

GUARD HOUSE FLOOR PLAN, ROOF PLAN & REFLECTED CEILING

SCALE AS SHOWN

PROJECT NO. 6151-08-0328

03-A-101

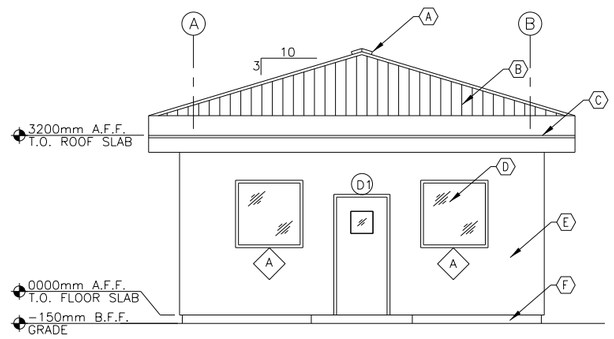

A ELEVATION-1
03-A-201 SCALE: 1:50

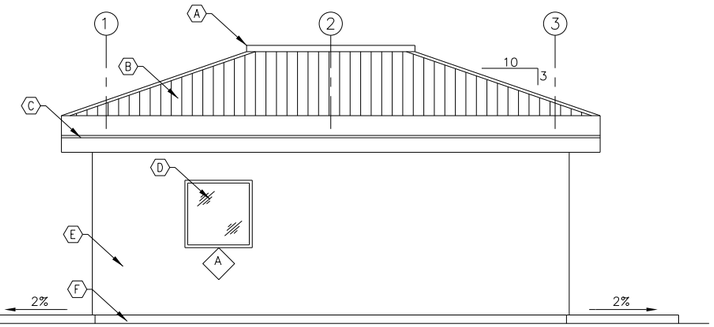

B ELEVATION-2
03-A-201 SCALE: 1:50

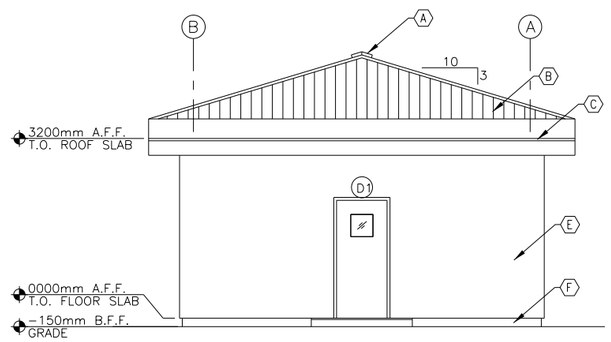

C ELEVATION-3
03-A-201 SCALE: 1:50

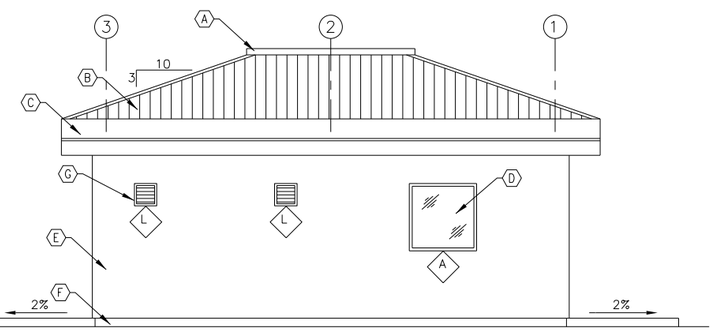

D ELEVATION-4
03-A-201 SCALE: 1:50

GENERAL NOTES:

1. WALL FINISHES SHALL BE AS INDICATED IN SCHEDULE ON 03-A-602.
2. SURFACES TO BE PAINTED SHALL BE CLEAN AND FREE OF FOREIGN MATTER BEFORE APPLICATION IF PAINT. CLEANING SHALL BE SCHEDULED SO THAT DUST AND OTHER CONTAMINANTS WILL NOT FALL ON WET, NEWLY PAINTED SURFACES.
3. CONCRETE AND INTERIOR MASONRY SURFACES GROUTED SOLID SHALL BE ALLOWED TO DRY AT LEAST 30 DAYS BEFORE PAINTING.
4. PAINTS CONTAINING LEAD IN EXCESS OF 0.6 PERCENT BY WEIGHT OF THE TOTAL NONVOLATILE CONTENT SHALL NOT BE USED.
5. MERCURIAL FUNGICIDES SHALL NOT BE USED IN OIL-BASE PAINT.
6. REMOVE LOOSE DIRT AND CLEAN SURFACES BEFORE PAINTING. APPLY PAINT TO INTERIOR STRUCTURAL RIGID FRAMING AND CEILINGS AND TEST FOR ADHESION.PRIMER COAT FOR MASONRY INITIAL FIRST COAT WITH AN ACRYLIC LATEX PAINT FOR EXTERIOR SURFACES AND A SECOND COAT WITH A WATER REPELLENT ACRYLIC LATEX PAINT.

KEY NOTES:

- (A) CONTINUOUS RIDGE VENT
- (B) CORRUGATED METAL ROOFING OVER LIGHT GAUGE METAL FRAMING ON CONCRETE ROOF DECK
- (C) BRAKE METAL TRIM WITH HEMMED DRIP EDGE, SEE DETAIL F/03-A-201
- (D) UL752, LEVEL 5, AK-47 RESISTANT FIXED METAL WINDOW AND GLAZING
- (E) STUCCO ON METAL LATH OVER 50mm RIGID INSULATION MECHANICALLY FASTENED TO FULLY GROUTED 200mm CMU
- (F) UNFINISHED CONCRETE SLAB ON GRADE
- (G) EXHAUST FAN LOUVER WITH BACKDRAFT DAMPER, TYP.
- (H) CONCRETE FOUNDATION WALL - SEE STRUCTURAL
- (I) CONCRETE COLUMN FOOTER BEYOND, SEE STRUCTURAL

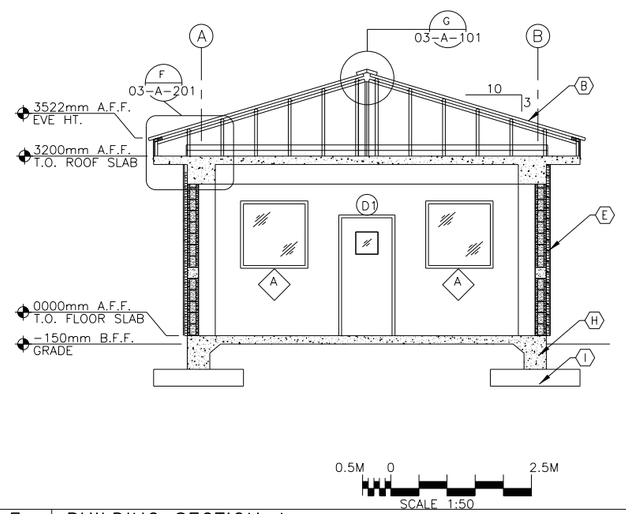

E BUILDING SECTION A
03-A-201 SCALE: 1:50

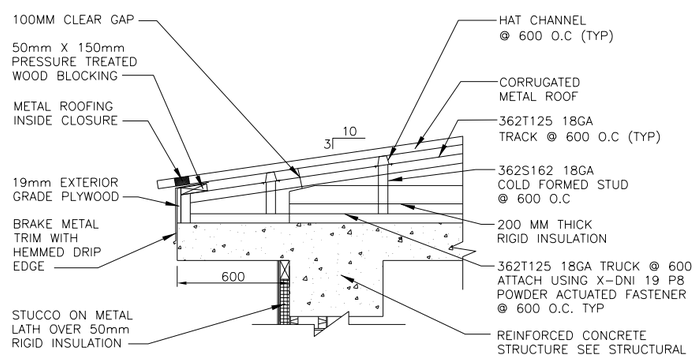

F EAVE DETAIL 1
03-A-201 SCALE: 1:10

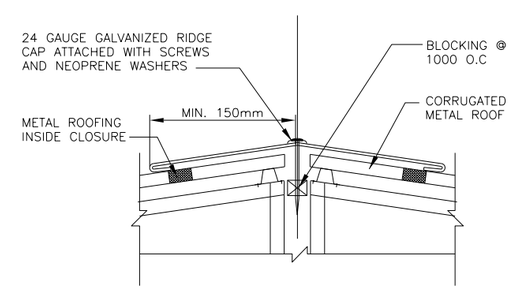

G TYPICAL HIP CAP SECTION
03-A-201 SCALE: 1:10

REV	DATE	BY	SUB	APP	DESCRIPTION
0	06/30/10				SITE ADAPT CONSTRUCTION PLANS

DESIGNED N. SPAHIC
DRAWN C. JUNG
CHECKED J. ANDERSON
IN CHARGE D. WHEELER
DATE 30 JUNE 2010

AFGHAN NATIONAL SECURITY FORCE
COMPREHENSIVE PLAN FOR FACILITIES DEVELOPMENT

MINISTRY OF INTERIOR (MoI) - AFGHAN NATIONAL POLICE
PROVINCIAL FIRE STATION - TYPE-B

GUARD HOUSE ELEVATIONS & DETAILS

SCALE AS SHOWN

PROJECT NO. 6151-08-0328

03-A-201

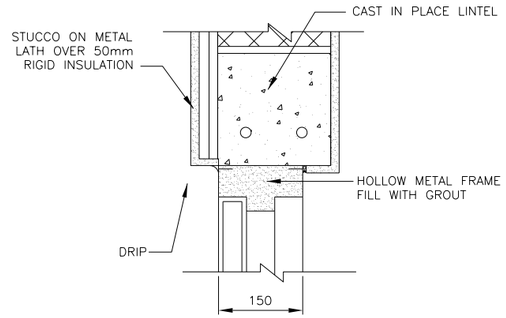

A EXTERIOR DOOR HEADER DETAIL
03-A-501 SCALE: N.T.S.

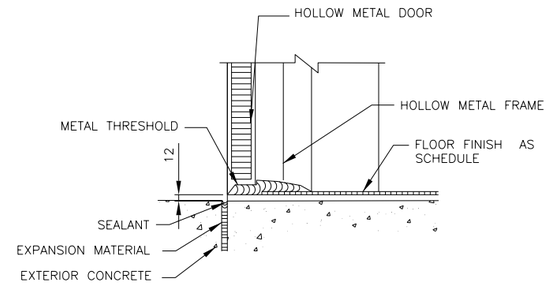

C EXTERIOR DOOR THRESHOLD
03-A-501 SCALE: N.T.S.

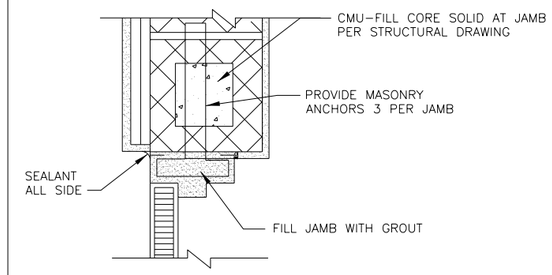

B EXTERIOR DOOR JAMB
03-A-501 SCALE: N.T.S.

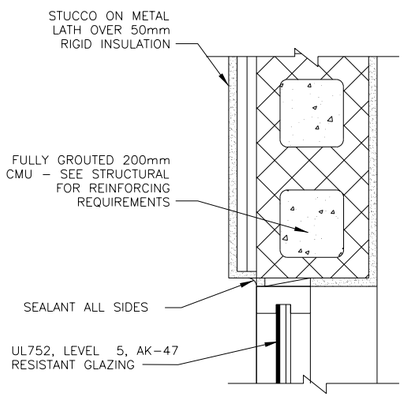

H WINDOW JAMB
03-A-501 SCALE: N.T.S.

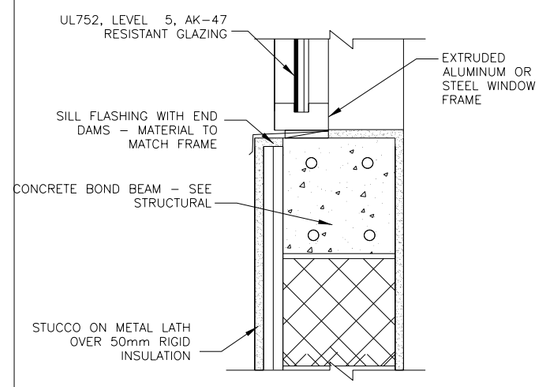

J WINDOW SILL
03-A-501 SCALE: N.T.S.

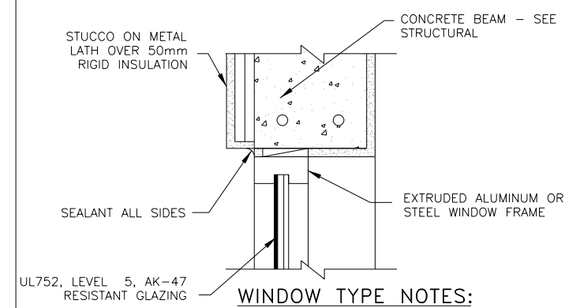

WINDOW TYPE NOTES:

1. WINDOW FRAME SHOULD BE EXTRUDED ALUMINUM OR STEEL
2. ALL WINDOW AND GLAZING SHALL MEET THE REQUIREMENTS UL752, LEVEL 5 RESISTANCE FOR PROTECTION AGAINST AK-47 FIRE.

E WINDOW HEADER
03-A-501 SCALE: N.T.S.

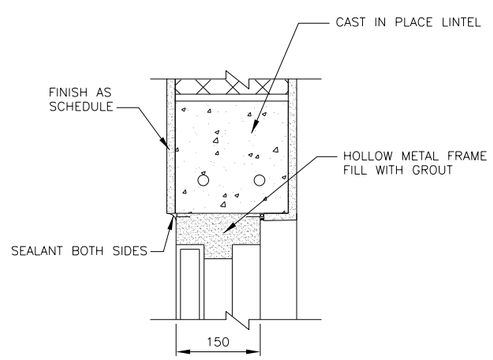

D INTERIOR DOOR HEADER DETAIL
03-A-501 SCALE: N.T.S.

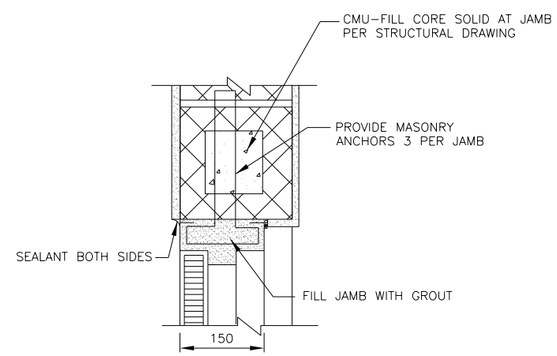

G INTERIOR DOOR JAMB
03-A-501 SCALE: N.T.S.

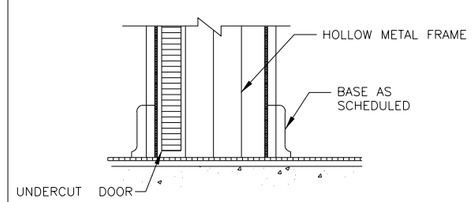

F INTERIOR DOOR THRESHOLD
03-A-501 SCALE: N.T.S.

REV	DATE	BY	SUB	APP	DESCRIPTION
0	06/30/10				SITE ADAPT CONSTRUCTION PLANS

DESIGNED N. SPAHIC
DRAWN C. JUNG
CHECKED J. ANDERSON
IN CHARGE D. WHEELER
DATE 30 JUNE 2010

AFGHAN NATIONAL SECURITY FORCE COMPREHENSIVE PLAN FOR FACILITIES DEVELOPMENT

MINISTRY OF INTERIOR (MoI) – AFGHAN NATIONAL POLICE PROVINCIAL FIRE STATION – TYPE-B

GUARD HOUSE DOOR & WINDOW DETAILS

SCALE AS SHOWN

PROJECT NO. 6151-08-0328

03-A-501

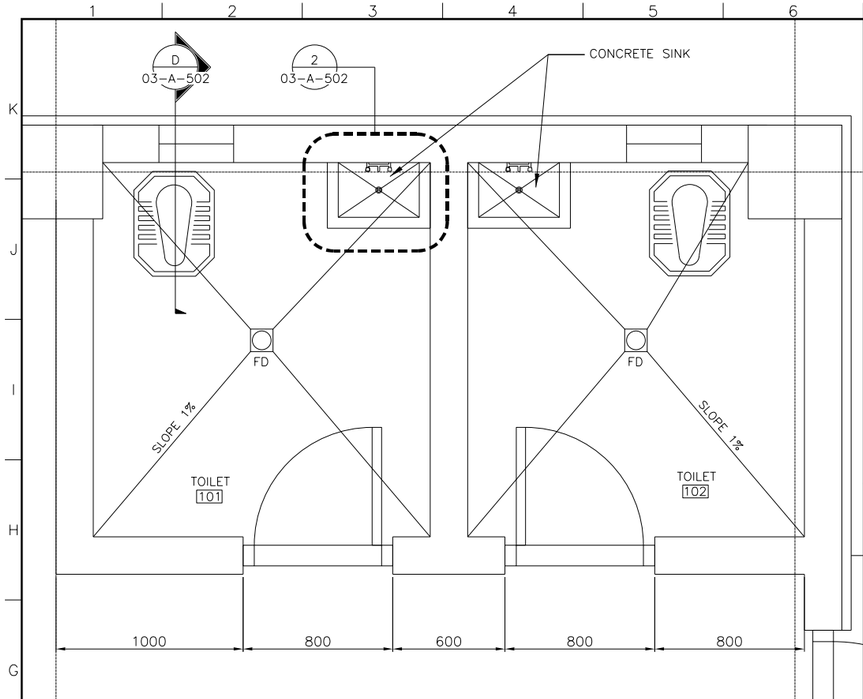

1 TOILET PLAN
03-A-502 1:15

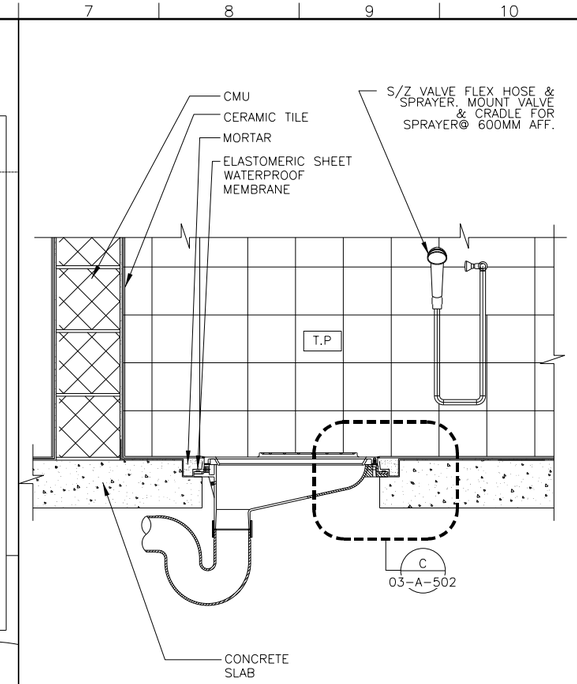

D THIN SET LATRINE TYPICAL
03-A-502 N.T.S.

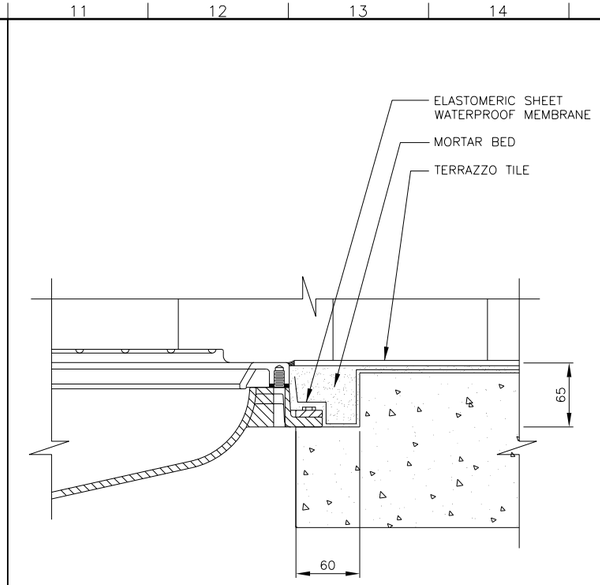

C MOUNTING DETAIL TYPICAL
03-A-502 N.T.S.

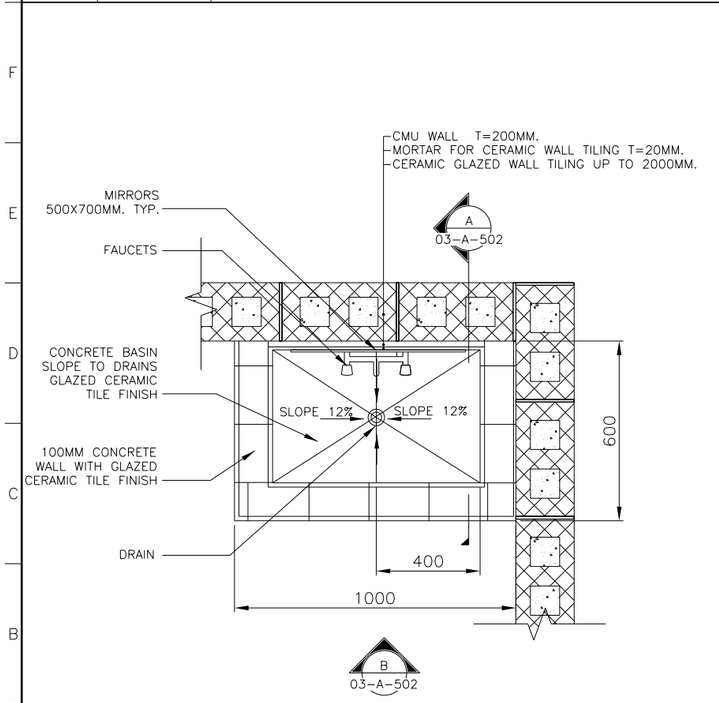

2 CONCRETE SINK PLAN TYPICAL
03-A-502 N.T.S.

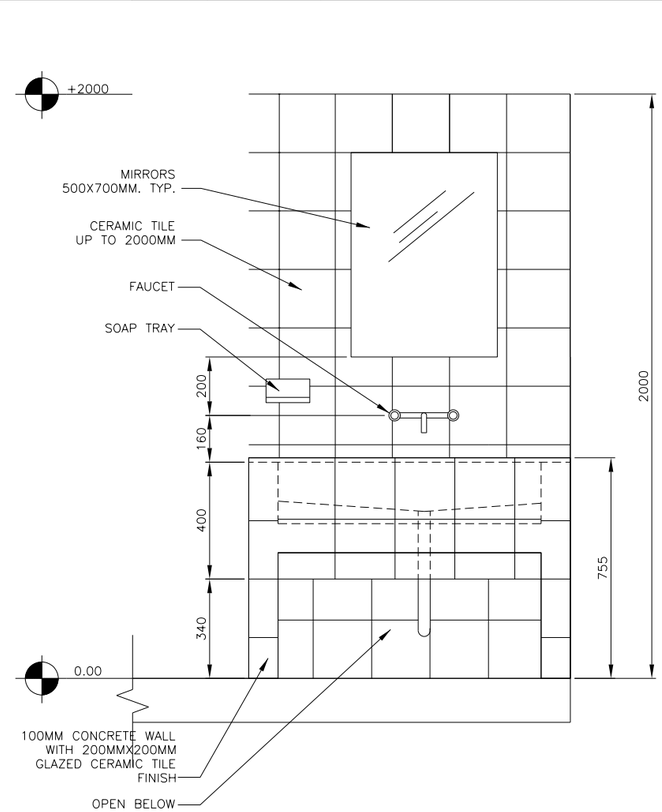

B CONCRETE SINK ELEVATION TYPICAL
03-A-502 N.T.S.

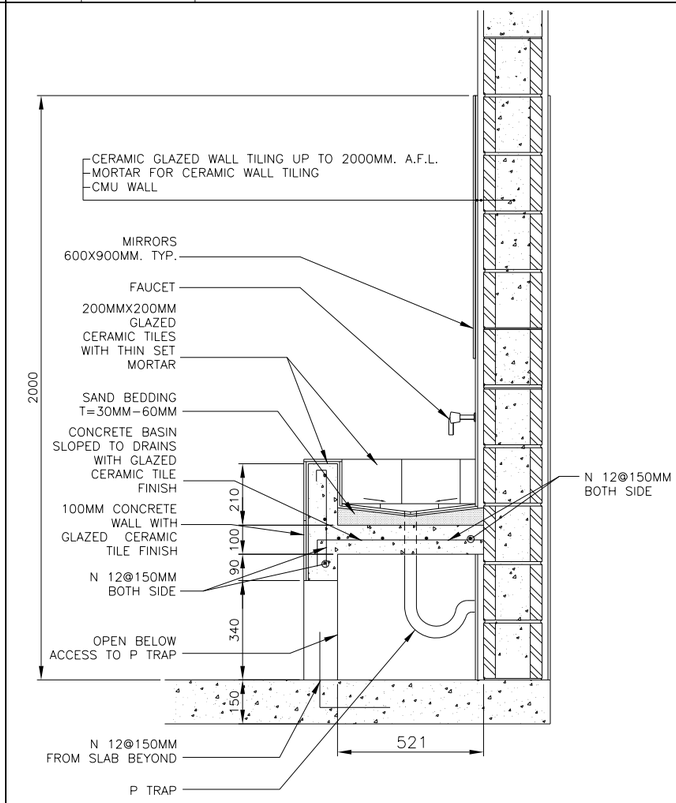

A CONCRETE SINK SECTION TYPICAL
03-A-502 N.T.S.

REV	DATE	BY	SUB/APP	DESCRIPTION
0	06/30/10			SITE ADAPT CONSTRUCTION PLANS

DESIGNED N. SPAHIC
DRAWN C. JUNG
CHECKED J. ANDERSON
IN CHARGE D. WHEELER
DATE 30 JUNE 2010

AFGHAN NATIONAL SECURITY FORCE
COMPREHENSIVE PLAN FOR FACILITIES DEVELOPMENT

MINISTRY OF INTERIOR (MoI) – AFGHAN NATIONAL POLICE
PROVINCIAL FIRE STATION – TYPE-B

GUARD HOUSE TOILET ENLARGED PLAN & DETAILS

SCALE AS SHOWN

PROJECT NO. 6151-08-0328

03-A-502

DOOR SCHEDULE

DOOR No.	DIMENSION WIDTH	HGT.	THK.	DOOR TYPE	DOOR MAT.	FRAME MAT.	HARDWARE	THRESHOLD	FIRE RATED	MATERIAL
D-1	914	2150	45	1	MTL	HM	HW-1	ALUM	–	EXTERIOR DOOR WITH FIRE RESISTANCE GLAZING
D-2	813	2150	45	2	PVC	HM	HW-2	ALUM	–	PVC DOOR WITH WEATHER STRIPPING

WINDOW SCHEDULE

WINDOW NUMBER	DIMENSION WIDTH	HEIGHT	WINDOW MAT.	WINDOW TYPE	DESCRIPTION
WA	1200	1200	ALUM	A	BULLET RESISTANT GLAZING ALUM CONSTRUCTION

LOUVER SCHEDULE

WINDOW NUMBER	DIMENSION WIDTH	HEIGHT	LOUVER MAT.	LOUVER TYPE		DESCRIPTION
L1	400	400	ALUM	1		METAL LOUVER WEATHER RESISTANT WITH BIRD SCREEN

HARDWARE NOTES:

HW-1 1-1/2 PR HINGES
1 EA LOCKSET F04, OFFICE DOOR LOCK W/LEVERS, GRADE 1
1 EA THRESHOLD, J32130
1 SET WEATHERSEALS
1 SET SILENCERS

HW-2 1-1/2 PR HINGES
1 EA LOCKSET F02, PRIVACY LOCK W/LEVERS, GRADE 1
1 SET SILENCERS

DOOR TYPE NOTES:
1. EXTERIOR DOOR, INCLUDING GLAZING, SHALL MEET THE REQUIREMENTS OF UL752, LEVEL 5 RESISTANCE FOR PROTECTION AGAINST AK-47 FIRE.
2. DOORS AND FRAME COLORS SHALL MATCH ADJACENT WALL COLORS AS SELECTED BY THE CONTRACTING OFFICE.
3. HARDWARE SHALL BE HEAVY DUTY. COMMERCIAL GRADE, STAINLESS STEEL WITH A MATTE FINISH. THERE SHALL BE THREE HINGES AT EACH DOOR, AT LEAST 200/16/5MM, WITH BALL BERING , SECURED BY THREADED PINS.
4. FRAMES SHALL BE MOUNTED AND ADJUSTED IN ACCORDANCE WITH MANUFACTURER'S INSTRUCTIONS. FRAMES SHALL BE FASTENED WITH MINIMUM OF THREE FASTENING POINTS PER SIDE AT REGULAR INTERVALS.
5. ALL DOOR FRAMES SHALL BE FITTED WITH DOOR SILENCERS.
6. DIMENSIONS SHOWN ON DOOR SCHEDULE ARE BASED UPON MODULAR MASONRY (OR ROUGH OPENING), HEIGHT OF 2200MM FOR STANDARD PERSONAL DOORS. CONTRACTOR SHALL COORDINATE WITH DOOR SUPPLIER TO ENSURE THAT DIMENSIONS OF DOORS AND FRAMES PROVIDED ARE COMPATIBLE WITH DOOR OPENING DIMENSIONS.
7. ALL DOOR LOCKS SHALL MORTISED.
8. LOCK FUNCTION F04-OFFICE DOOR LOCK- LATCH BOLT OPERATED BY LEVER FROM EITHER SIDE EXCEPT WHEN OUTSIDE LEVER IS MADE INOPERATIVE BY A STOP OR MECHANICAL MEANS OTHER THAN A KEY. WHEN OUTSIDE LEVER IS LOCKED, LATCH BOLT MAY BE RETRACTED BY KEY FROM OUTSIDE OR BY ROTATING INSIDE LEVER.
9. LOCK FUNCTION F02- PRIVACY LOCK-LATCH BOLT OPERATED BY LEVER EITHER SIDE. DEADBOLT OPERATED BY TURN FROM INSIDE AND BY EMERGENCY KEY FROM OUTSIDE

NOTES:

1. FOR HARDWARE DESCRIPTION SEE SPECIFICATIONS SECTION 08 71 00.
2. CONTRACTOR TO USE LOCALLY FABRICATED DOORS AND WINDOWS.

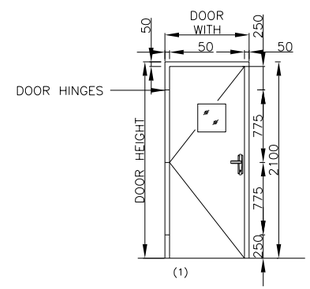

A METAL DOOR
03-A-601 SCALE: 1:30

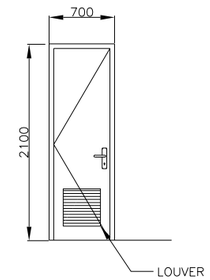

B PVC DOOR
03-A-601 SCALE: 1:30

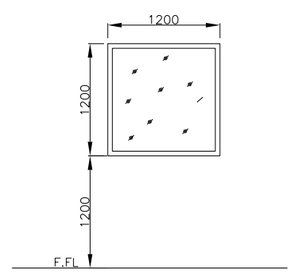

C WINDOW
03-A-601 SCALE: 1:30

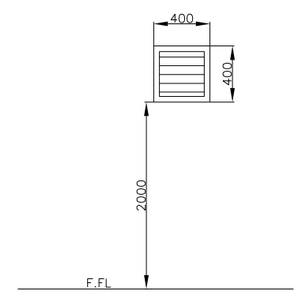

D LOUVER
03-A-601 SCALE: 1:30

REV	DATE	BY	SUB	APP	DESCRIPTION
0	06/30/10				SITE ADAPT CONSTRUCTION PLANS

DESIGNED N. SPAHIC
DRAWN C. JUNG
CHECKED J. ANDERSON
IN CHARGE D. WHEELER
DATE 30 JUNE 2010

AFGHAN NATIONAL SECURITY FORCE
COMPREHENSIVE PLAN FOR FACILITIES DEVELOPMENT

MINISTRY OF INTERIOR (MoI) – AFGHAN NATIONAL POLICE
PROVINCIAL FIRE STATION – TYPE-B

GUARD HOUSE DOOR & WINDOW SCHEDULE

SCALE AS SHOWN

PROJECT NO. 6151-08-0328

03-A-601

ROOM FINISH SCHEDULE

ROOM NO.	ROOM NAME	FLOOR	BASE	WALL		CEILING			DOOR & WINDOW FINISH		REMARKS
		MATERIAL	MATERIAL	MATERIAL	FINISH	MATERIAL	FINISH	HEIGHT	MATERIAL	FINISH	
100	GUARD HOUSE	TT-1	MT-1	P	P-1	P	P-3	3050	MTL	P-4	
101	TOILET	CT-1	MT-1	CT-5	P-6	P	P-6	3050	PVC	–	
102	TOILET	CT-1	MT-1	CT-5	P-6	P	P-6	3050	PVC	–	

GENERAL FINISH NOTES/TYPICAL COLORS & MATERIAL SELECTION

FLOORING

CONC/S CONCRETE SEALED AND HARDENED WITH BROOM FINISH

TERRAZZO TILE (TT)
TT-1 AFGHAN LOCAL PRODUCT; 300mm X 300mm WITH SPECIAL POLISH

ENTRY MAT (MAT)
MAT-1 REESE PERFEC CLEAN ALUMINUM HINGE MAT; RECESSED FRAME WITH NO. 546 CARPET INSERTS, METAL FINISH: MIL ALUMINUM; CARPET INSERTS: MAUVE 8616

CERAMIC TILE (CT)
CT-1 R.A.K CERAMIC UAE; 300mm X 300mm UNPOLISHED PORCELAIN

CT-2 AFGHAN LOCAL PRODUCT; 300mm X 600mm POLISHED PORCELAIN

CT-3 AFGHAN LOCAL PRODUCT; 600mm X 1000mm UNPOLISHE PORCELAIN

CT-4 R.A.K CERAMIC UAE;#4/700RBEM-10 200mm X 200mm UNPOLISHE PORCELAIN

CT-5 R.A.K CERAMIC UAE;# 600CPAR-2 200mm X 300mm UNPOLISHE PORCELAIN

BASE TREATMENTS

MARBLE TILE (MT)
MT-1 AFGHAN LOCAL PRODUCT; 75mm X 100mm CROSS SHEEN PORCELAIN MARBLE TILE COVE BASE; #AXXX EMPRESS BLACK

WALL FINISHES

PAINT/EPOXY PAINT (P/EP):
P-1 BRIGHTO PAINTS; # 42 SAND STONE SUPER EMULSION

P-2 BRIGHTO PAINTS; # 127 CAMEO FOR EXTERNAL USE WEATHER SHIELD

P-3 BRIGHTO PAINTS; # X LATEX FOR WATER BASE WALL AND CEILING

P-4 BRIGHTO METALLIC ENAMEL; # 3 LIGHT GRAY SUITABLE FOR USE ON ALL TYPES OF INTERIOR AND EXTERIOR WOOD AND METAL SURFACES.

P-5 BRIGHTO METALLIC ENAMEL; # 42 ASH WHITE SUITABLE FOR USE ON ALL TYPES OF INTERIOR AND EXTERIOR WOOD AND METAL SURFACES.

P-6 BRIGHTO PAINTS; # 12 OFF WHITE

P-7 BRIGHTO PAINTS; #70 ROSE WHITE

P-8 BRIGHTO PAINTS; #69 LILY WHITE

P-9 BRIGHTO PAINTS; #40 PEACH CREAM

CERAMIC TILE (CT):
CT-4 R.A.K CERAMIC UAE;#4/700RBEM-10 200mm X 200mm UNPOLISHE PORCELAIN

CT-5 R.A.K CERAMIC UAE; # 600CPAR-2 200mm X 300mm UN-POLISHE

CEILING FINISHES

PAINTED CEILINGS (P)
P-1 BRIGHTO PAINT; # 12 OFF WHITE

MISCELLANEOUS SURFACES

TOILET PARTITIONS (TP)
NOT USED

SIGNAGE (S)
S-1 BACKGROUND COLOR: MATCH P-3, TEXT: WHITE

INTERIOR DOOR AND WINDOW FRAMES
P-4 BRIGHTO ; #3 LIGHT GRAY

FINISH SCHEDULE ABBREVIATIONS

AFF	ABOVE FINISHED FLOOR	LAM	PLASTIC LAMINATE
ALSF	ALUMINUM STOREFRONT SYSTEM	MANUF	BY MANUFACTURER
		MAT	ENTRY MAT
ATC	ACOUSTIC TILE CEILING	MR	MOISTURE RESISTANT
CB	CEMENT BOARD	MTL	METAL PANEL
CONC/S	CONCRETE SEALED AND HARDENED WITH BROOM FINISH	MW	MOVABLE WALL
		NA	NOT APPLICABLE
		P	PAINT
CPT	CARPET	PREFIN	PREFINISHED
CT	CERAMIC TILE	RB	RESILIENT BASE
EP	EPOXY PAINT	RBP	RACQUETBALL PANEL
EXPOSED	EXPOSED STRUCTURE	VCT	VINYL COMPOSITION TILE
GN	GENERAL NOTE	MT	MARBLE TILE
GWB	GYPSUM WALL BOARD	MTD	METALLIC DOOR
HM	HOLLOW METAL	WD	WOOD DOOR
		TT	TERRAZZO TILE
		PVC	POLYVINYL

GENERAL NOTES

1. THE MANUFACTURER'S NAMES AND THEIR PRODUCTS REFERENCED ONLY INDICATE THE COLOR, TEXTURE, AND PATTERN REQUIRED FOR THE MATERIALS LISTED. THE PRODUCTS FURNISHED SHALL MEET THE COLOR, TEXTURE, AND PATTERN INDICATED AS WELL AS THE MATERIAL QUALITY AND PERFORMANCE SPECIFIED IN THE APPLICABLE TECHNICAL SPECIFICATIONS. THE USE OF MANUFACTURER'S NAMES AND PRODUCTS DO NOT PRECLUDE THE USE OF OTHER MANUFACTURER'S PRODUCTS OF APPROVED EQUAL COLOR, TEXTURE, AND/OR PATTERN IF ALL OTHER REQUIREMENTS ARE MET.
2. ALL VISIBLE GRILLES, DIFFUSERS, AND OTHER MECHANICAL RELATED FINISH OPENING DEVICES INCLUDING FIRE ALARMS SHALL BE PAINTED TO MATCH COLOR OF ADJACENT SURFACE.
3. REFER TO APPROPRIATE ARCHITECTURAL DRAWINGS AND DETAILS TO PROPERLY ASSESS THE FULL EXTENT OF WORK REQUIRED. SPECIFICALLY REFER TO THE REFLECTED CEILING PLANS AND BUILDING SECTIONS TO DETERMINE HEIGHTS OF REQUIRED WALL MATERIALS, SPECIAL CONDITIONS AND STRUCTURES, ETC.
4. REFER TO EXTERIOR ELEVATIONS FOR EXTERIOR FINISH SELECTIONS.
5. INFILL FLOOR AT SLAB RECESSES NOT TO RECEIVE CERAMIC TILE WITH CONCRETE LEVEL WITH ADJACENT FLOOR SURFACES PRIOR TO APPLYING FLOOR FINISH.
6. INTERIOR SURFACE OF EXTERIOR METAL DOORS AND FRAMES SHOULD COMPLY WITH P-4

NOTE:
NOT ALL FINISHES APPLY TO ALL BUILDINGS.

REV	DATE	BY	SUB	APP	DESCRIPTION
0	06/30/10				SITE ADAPT CONSTRUCTION PLANS

DESIGNED N. SPANIC
DRAWN C. JUNG
CHECKED J. ANDERSON
IN CHARGE D. WHEELER
DATE 30 JUNE 2010

AFGHAN NATIONAL SECURITY FORCE
COMPREHENSIVE PLAN FOR FACILITIES DEVELOPMENT
MINISTRY OF INTERIOR (MoI) – AFGHAN NATIONAL POLICE
PROVINCIAL FIRE STATION – TYPE-B
GUARD HOUSE ROOM FINISH SCHEDULE

SCALE AS SHOWN
PROJECT NO. 6151-08-0328
03-A-602

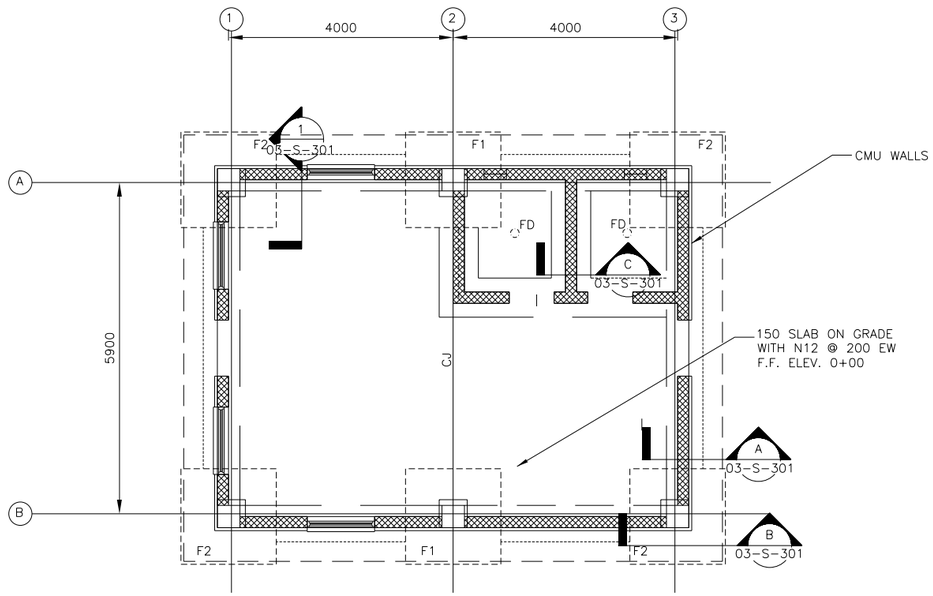

1 FOUNDATION PLAN

03-S-101 SCALE: 1:50

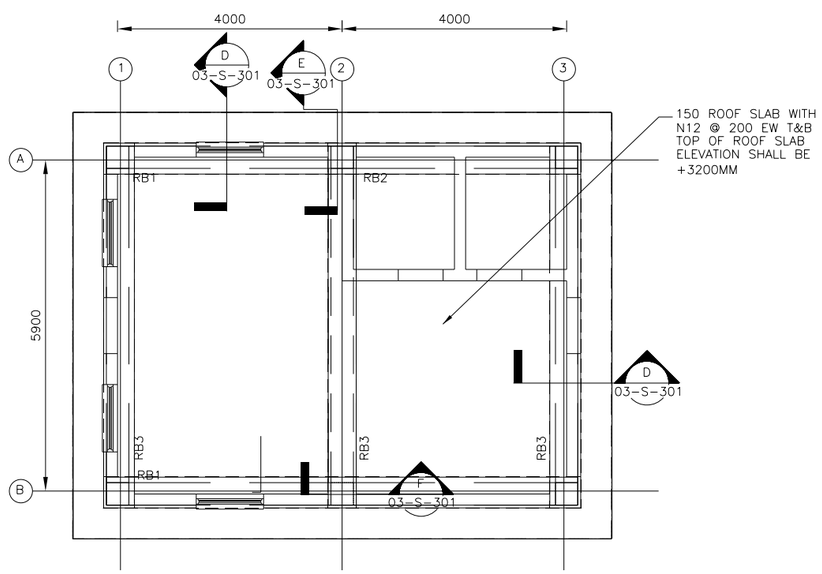

2 ROOF FRAMING PLAN

03-S-101 SCALE: 1:50

NOTES:

1. ALL CELLS OF CMU WALL SHALL BE FULLY GROUTED – SEE SHEETS 03-S-601, 00-S-004 AND 03-S-601 FOR REINFORCING REQUIREMENTS.
2. SEE SHEET 03-S-601 FOR FOOTING SCHEDULE
3. SEE SHEET 03-S-601 FOR CONCRETE BEAM, REINFORCING SCHEDULE.
4. F.D. INDICATES FLOOR DRAINS
5. SLAB PENETRATIONS, DEPRESSIONS, AND FLOOR DRAINS SHALL BE COORDINATED BY CONTRACTOR W/ ARCHITECTURAL & MEP REQUIREMENTS.
6. C.J. INDICATES CONTROL JOINT.
7. FOR GENERAL STRUCTURAL NOTES, SEE 00-S-001 THROUGH 00-S-004.
8. FOR STANDARD STRUCTURAL DETAILS, SEE 00-S-501 THROUGH 00-S-505.
9. REFER TO SHEET 00-S-003 FOR CONCRETE REINFORCING INFORMATION.
10. CONTRACTOR COORDINATE THE INSTALLATION OF COLD-FORMED METAL TRUSS SYSTEM WITH ARCHITECTURAL SHEETS 03-A-101 AND 03-A-201.

REV	DATE	BY	SUB	APP	DESCRIPTION
0	06/30/10				SITE ADAPT CONSTRUCTION PLANS

DESIGNED Y. STEOMEIR
DRAWN M. LORENZ
CHECKED M. GARVER
IN CHARGE D. WHEELER
DATE 30 JUNE 2010

AFGHAN NATIONAL SECURITY FORCE
COMPREHENSIVE PLAN FOR
FACILITIES DEVELOPMENT

MINISTRY OF INTERIOR (MoI) – AFGHAN NATIONAL POLICE
PROVINCIAL FIRE STATION – TYPE-B

GUARD HOUSE FOUNDATION & ROOF FRAMING PLAN

SCALE
AS SHOWN

PROJECT NO.
6151-08-0328

03-S-101

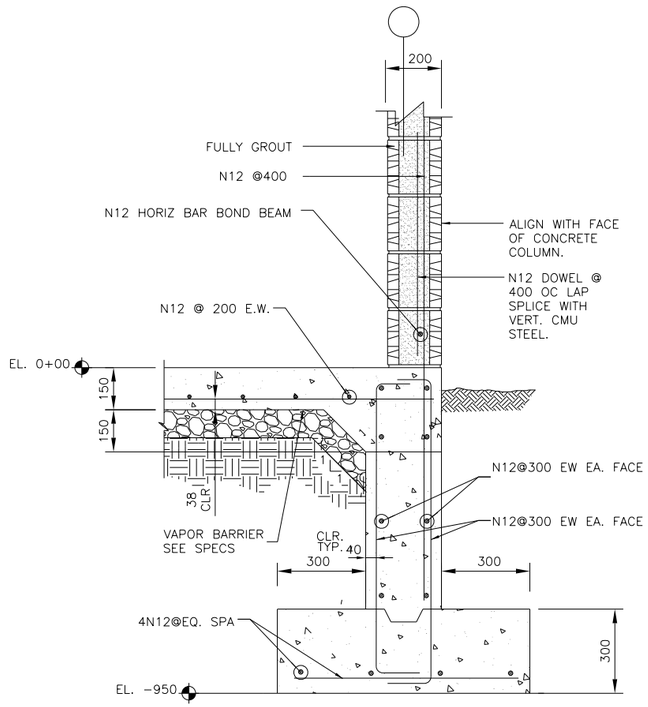

A SECTION AT EXTERIOR WALL
03-S-301 SCALE:1:10

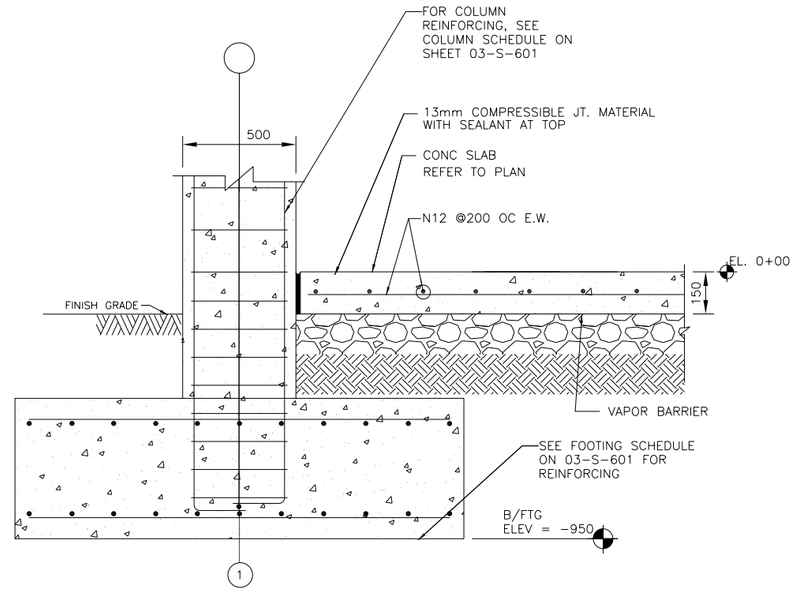

B SECTION AT EXTERIOR COLUMN
03-S-301 SCALE:1:10

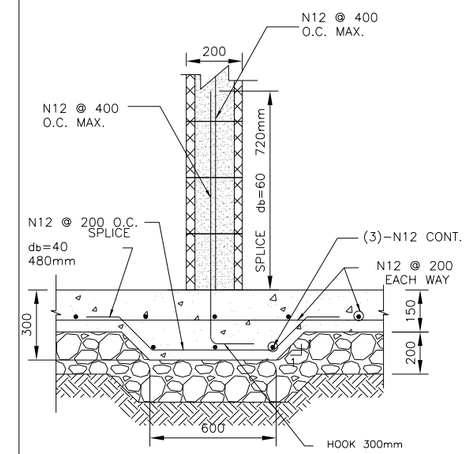

C SECTION AT INTERIOR CMU WALL
03-S-301 SCALE:1:10

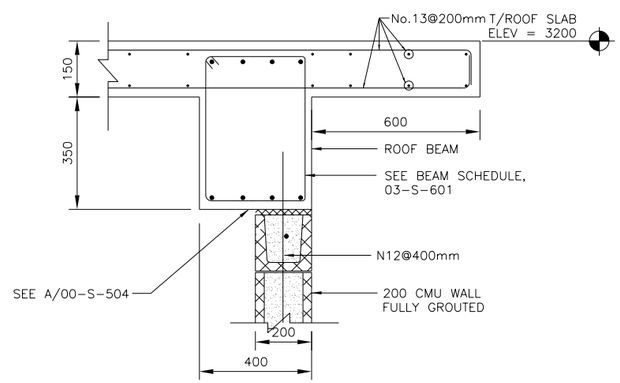

D SECTION AT EXTERIOR ROOF BEAM
03-S-301 SCALE:1:10

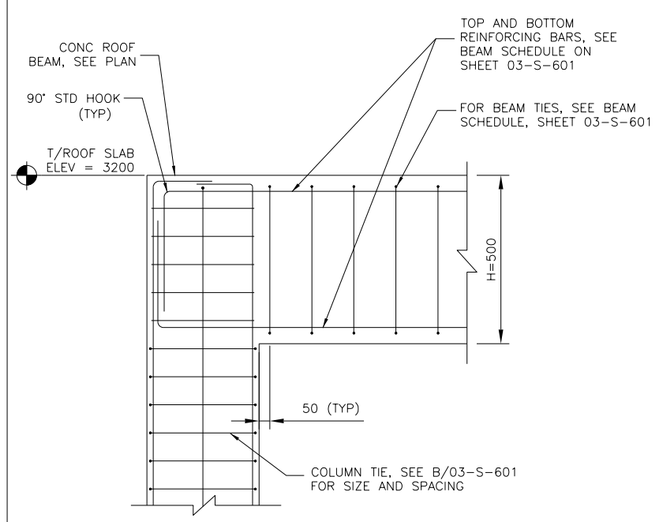

E BEAM/COLUMN REINFORCING DETAIL
03-S-301 SCALE:1:10

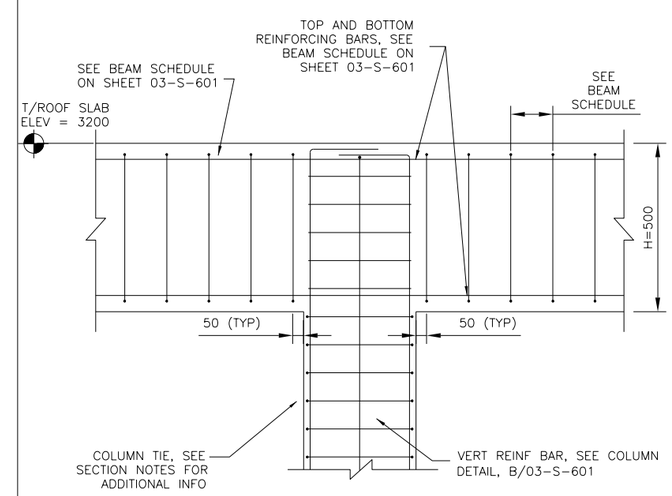

F BEAM/COLUMN REINFORCING DETAIL
03-S-301 SCALE:1:10

REV	DATE	DESCRIPTION	APP
0	06/30/10	SITE ADAPT CONSTRUCTION PLANS	SUB

DESIGNED V. STEGMEIR
DRAWN M. LORENZ
CHECKED M. GARVER
IN CHARGE D. WHEELER
DATE 30 JUNE 2010

AFGHAN NATIONAL SECURITY FORCE COMPREHENSIVE PLAN FOR FACILITIES DEVELOPMENT

MINISTRY OF INTERIOR (MoI) – AFGHAN NATIONAL POLICE PROVINCIAL FIRE STATION – TYPE-B

GUARD HOUSE STRUCTURAL DETAILS

SCALE AS SHOWN

PROJECT NO. 6151-08-0328

03-S-301

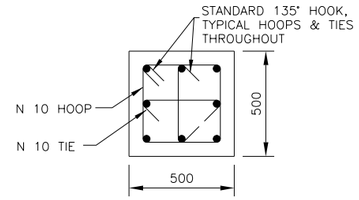

A COLUMN REINFORCEMENT DETAIL
03-S-601 SCALE: NTS

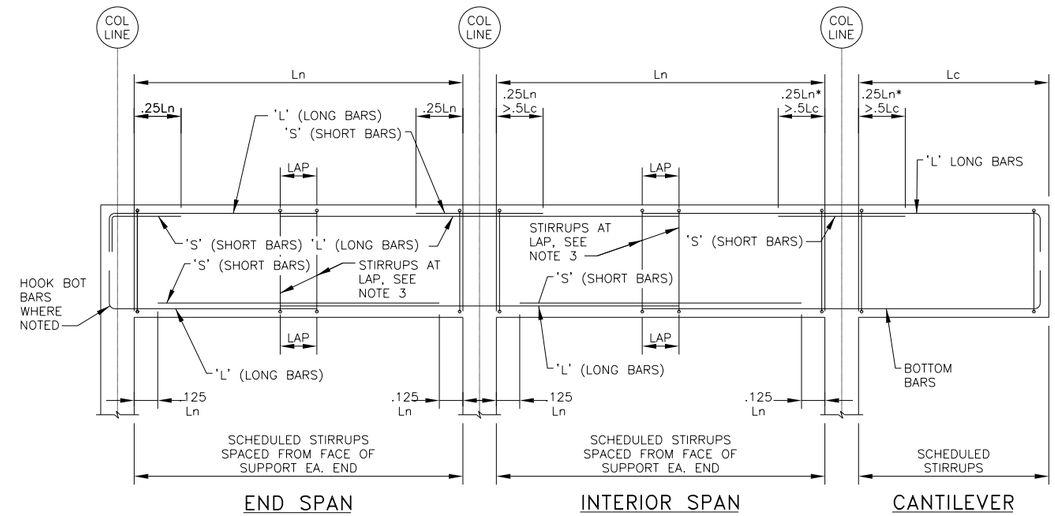

NOTES:
1. Ln* INDICATES GREATER OF TWO ADJACENT SPANS
2. FOR BAR LAPS SEE 3/00-S-501
3. MAX SPACING OF STIRRUPS @ LAP SHALL BE 10MM O.C.

1 TYPICAL CONCRETE BEAM DIAGRAM
03-S-601 SCALE: NTS

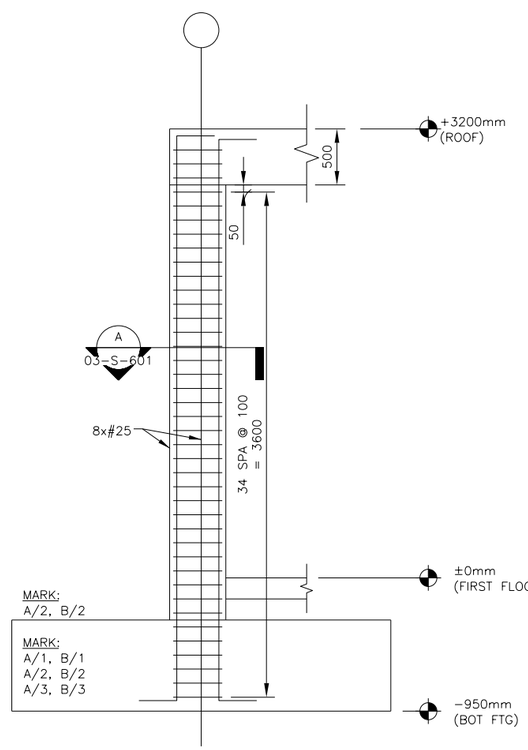

B COLUMN REINFORCEMENT DETAIL
03-S-601 SCALE: NTS

CONCRETE BEAM SCHEDULE

BEAM MARK	BEAM SIZE		REINFORCING			STIRRUPS			REMARKS
	WIDTH (MM)	DEPTH (MM)	BOTTOM BARS	TOP LEFT BARS	TOP RIGHT BARS	SIZE	TYPE	SPACING EACH END (MM)	
RB1	500	500	4-N16S	4-N16L	4-N26S	N12	A	1@50;5@100;	Extend "L" Bars over Support and Splice w/ RB2, T&B
			4-N16L					R@220	
RB2	500	500	4-N16L	4-N16L	4-N16S	N12	A	1@50;5@100;	Splice RB1 "L" w/ RB2 "S" Bars
								R@220	
RB3	500	500	4-N16L	4-N16L	-	N12	A	1@50;5@100;	Provide 90o Hooks, Ea. End
								R@220	

FOOTING SCHEDULE

FOOTING NO.	B (MM)	L (MM)	H (MM)	LONG TOP BARS	SHORT TOP BARS	LONG BOTTOM BARS	SHORT BOTTOM BARS	DETAIL
F1	3500	3500	500	N25@150MM	N25@150MM	N25@150MM	N25@150MM	1/03-S-601
F2	2000	2000	380	N16@200MM	N16@200MM	N16@200MM	N16@200MM	2/03-S-601

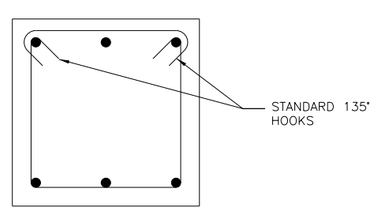

C TYPICAL STIRRUP DETAIL
03-S-601 SCALE: NTS

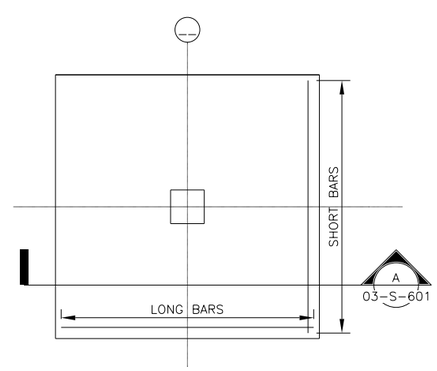

2 FOOTING DETAIL
03-S-601 SCALE: 1:50

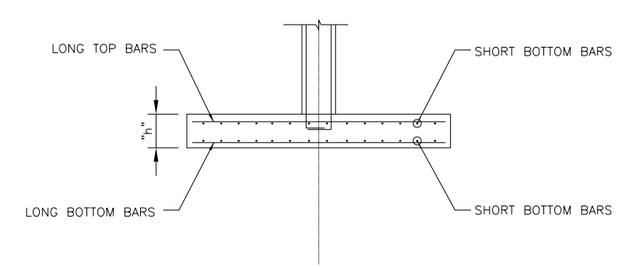

A SECTION
03-S-601 SCALE: 1:50

REV	DATE	BY	SUB'APP	DESCRIPTION
0	06/30/10			SITE ADAPT CONSTRUCTION PLANS

DESIGNED V. STEGMEIR
DRAWN M. LORENZ
CHECKED MIKE GARVER
IN CHARGE D. WHEELER
DATE 30 JUNE 2010

AFGHAN NATIONAL SECURITY FORCE COMPREHENSIVE PLAN FOR FACILITIES DEVELOPMENT

MINISTRY OF INTERIOR (MoI) - AFGHAN NATIONAL POLICE PROVINCIAL FIRE STATION - TYPE-B

GUARD HOUSE STRUCTURAL SCHEDULES

SCALE AS SHOWN

PROJECT NO. 6151-08-0328

03-S-601

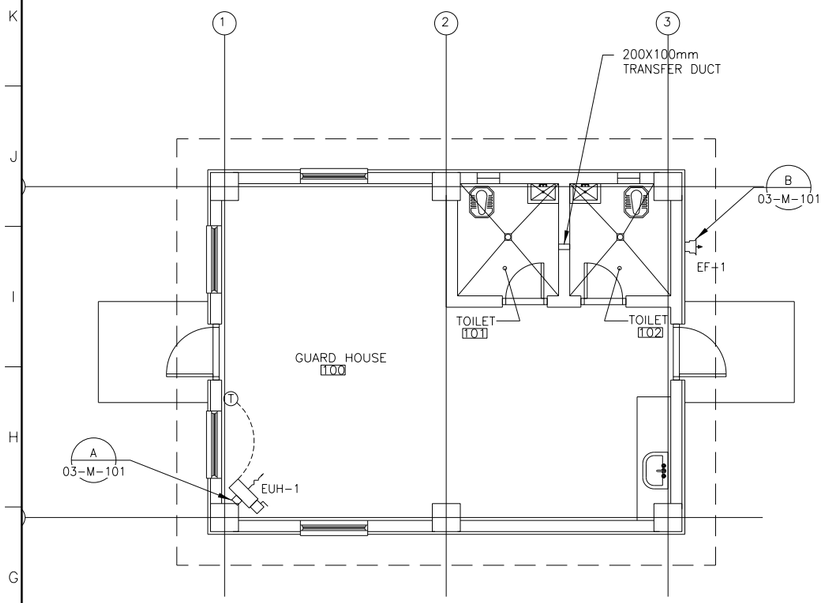

1 GUARD HOUSE HVAC FLOOR PLAN

03-M-101 1:50

FAN SCHEDULE									
NO.	TYPE	VOLUME		SP (in WG)	FRPM	SIZE (HP)	V/C/P	BASIS OF DESIGN	REMARKS
		CFM	l/s						
EF-1	INLINE	139	66	0.2	1,290	1/25	220/50/1	GREENHECK CUE-070-L	1,2,3,4

REMARKS:
1. PROVIDE WITH UNIT MOUNTED, FACTORY INSTALLED STARTER AND DISCONNECT.
2. ACTIVATE WITH WALL MOUNTED SWITCH.
3. INTERLOCK WITH LIGHT SWITCH.
4. EXPLOSION PROOF NOT REQUIRED.

ELECTRIC UNIT HEATER SCHEDULE											
NO.	BASIS OF DESIGN	VOLTAGE (V)	PHASE	NOMINAL WATTAGE (Kw)	BTU/hr	TOTAL CURRENT (A)	AIR DELIVERY		AIR TEMPERATURE RISE		REMARKS
							CFM	l/s	°F	°C	
EUH-1	RUFFNECK FE1	380	3	2.5	8,550	3.8	400	189	14.3	7.9	1

REMARKS:
1. PROVIDE WITH UNIT MOUNTED, FACTORY INSTALLED STARTER AND DISCONNECT.

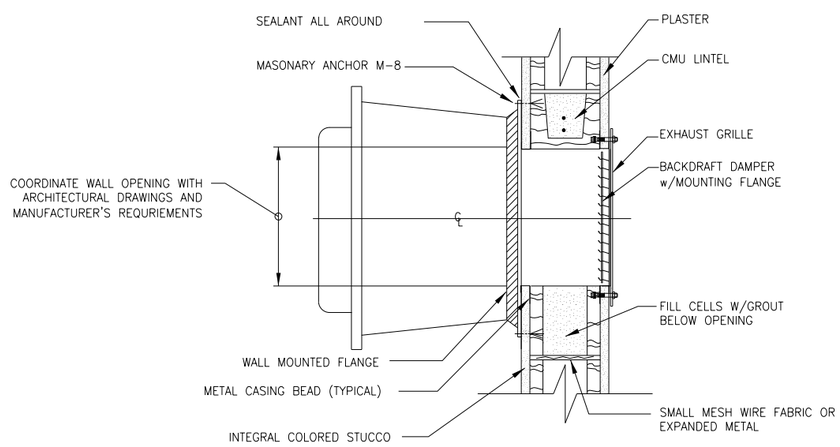

NOTES:
* GASKET MATERIAL TO BE PROVIDED TO BOTTOM OF FAN INSIDE MOUNTING ANGLES.

B EXHAUST FAN DETAIL

03-M-101 N.T.S.

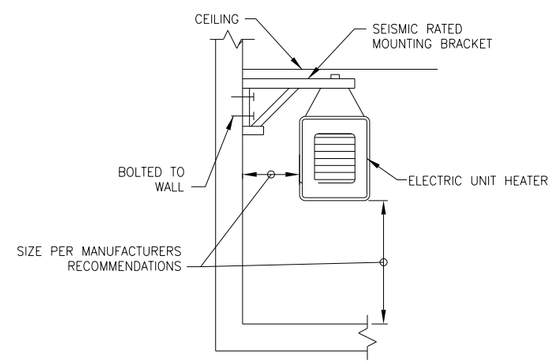

A ELECTRIC UNIT HEATER DETAIL

03-M-101 N.T.S.

REV	DATE	BY	SUB	APP	DESCRIPTION
0	06/30/10				SITE ADAPT CONSTRUCTION PLANS

DESIGNED M. FISHER
DRAWN C. JUNG
CHECKED J. MARIANETTI
IN CHARGE D. WHEELER
DATE 30 JUNE 2010

AFGHAN NATIONAL SECURITY FORCE
COMPREHENSIVE PLAN FOR
FACILITIES DEVELOPMENT

MINISTRY OF INTERIOR (MoI) - AFGHAN NATIONAL POLICE
PROVINCIAL FIRE STATION - TYPE-B

GUARD HOUSE MECHANICAL (HVAC) PLAN

SCALE AS SHOWN

PROJECT NO. 6151-08-0328

03-M-101

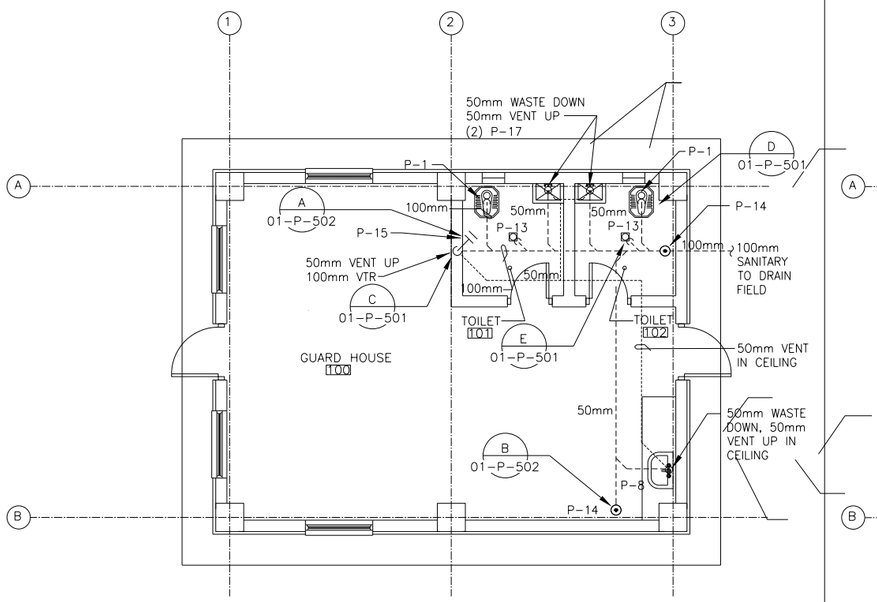

1 GUARD HOUSE WASTE AND VENT PLUMBING PLAN

03-P-101 SCALE

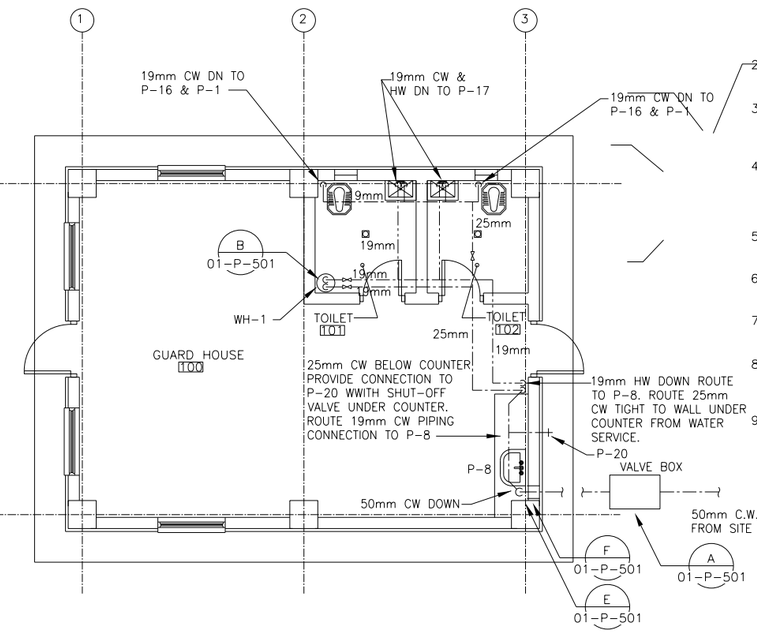

2 GUARD HOUSE DOMESTIC WATER PLUMBING PLAN

03-P-101 SCALE

NOTES:

1. BUILDING HAS MULTIPLE ORIENTATIONS ON SITE. SEE CIVIL SITE PLAN FOR WATER AND SANITARY SERVICE ENTRANCE AND EXIT LOCATIONS. DOMESTIC WATER SERVICE SHALL BE PROVIDED WITH ONE VALVE BOX AS LOCATED ON SITE PLAN.
2. ALL TOILETS SHALL BE INSTALLED IN A NORTH/SOUTH ORIENTATION.
3. ALL EASTERN-TYPE WATER CLOSETS SHALL HAVE A HOSE BIBB INSTALLED ON OCCUPANT'S RIGHT-HAND SIDE.
4. ALL PIPING SHALL BE RUN TIGHT TO CEILING. PIPING SHALL NOT BE IN WALLS WHERE POSSIBLE BUT EXPOSED AND STRAPPED TIGHT TO WALL.
5. ALL PIPING ON EXTERIOR WALLS SHALL BE INSULATED.
6. INSTALL PIPE SUPPORTS ACCORDING TO 2006 IPC PLUMBING CODE.
7. ALL HORIZONTAL PIPING SHALL BE ROUTED TIGHT TO CEILING WHEREVER POSSIBLE.
8. SEE DETAIL C/03-P-502 FOR PIPE HANGER DETAIL TO SUPPORTING OF PIPING IN THE CEILING.
9. CONTRACTOR SHALL ROUTE AND SIZE ALL SUB SLAB PIPING PER SPECIFIC SITE ADAPT CONDITIONS. CONTRACTOR SHALL COORDINATE PIPING WITH ALL OTHER DISCIPLINES. SHOP DRAWINGS SHALL BE SUBMITTED FOR SLEEVE AND SEAL DETAILS AND FOOTING AND FOUNDATION PENETRATION LOCATIONS. ONCE APPROVED, FOUNDATIONS AND FOOTINGS SHALL BE CAST AROUND PIPING PENETRATIONS.

ELECTRIC HOT WATER HEATER SCHEDULE

UNIT NO.	GALLONS (LITERS) OF STORAGE	RECOVERY RATE GPH (LPH)	NUMBER OF ELEMENTS	TOTAL HEAT OUTPUT KW	VOLTAGE	PHASE	HERTZ	F.L.A.	OUTSIDE DIAMETER	HEIGHT	MOUNTING HEIGHT BOTTOM OF UNIT	MOUNTING KIT (W) WALL OR @ CEILING	INCLUDE P&T RELIEF	COMMENTS
WH-1	6 (22)	17 (64)	1	3	220	1	50	13.7	0.406 M	0.406 M	IN TRUSS	YES	YES	

PLUMBING FIXTURE CONNECTION SCHEDULE

MARK	FIXTURE	CW MM/INCH.	HW MM/INCH.	VENT MM/INCH.	WASTE MM/INCH.	REMARKS
P-1	WATER CLOSET	19 (3/4")	—	50 (2")	100 (4")	EASTERN WATER CLOSET (SEE ARCHITECTURAL D/03-A-502) DRAWING FOR LOCATION OF HOSE BIBB
P-8	KITCHEN SINK SINGLE COMPARTMENT	12.7 (1/2")	12.7 (1/2")	50 (2")	50 (2")	
P-13	FLOOR DRAIN	—	—	—	100 (4")	PROVIDE BASKET STRAINER
P-14	FLOOR CLEAN OUT	—	—	—	100 (4")	
P-15	WALL CLEAN OUT	—	—	—	100 (4")	
P-16	HOSE BIBB	—	—	—	—	WITH FLEX HOSE SHOWER HEAD & HOLDER WHEN NEAR P-1
P-17	LAVATORIES (CONCRETE SINK)	12.7 (1/2")	12.7 (1/2")	50 (2")	50 (2")	SEE ARCHITECTURAL DRAWING 2/03-A-502 FOR DESCRIPTION AND DETAIL
P-20	HOSE BIBB (OUTSIDE)	12.7 (1/2")	—	—	—	PROVIDE WOODFORD FREEZELES HOSE BIBB MODEL#17 OR EQUAL

LINES STYLE	DESCRIPTION
	COLD WATER (CW)
	HOT WATER (HW)
	VENT PIPE (V)
	SANITARY/WASTE PIPE ABOVE FLOOR (SP)
SAN	SANITARY/WASTE PIPE BELOW FLOOR (MIN. 50 SIZE)

PLUMBING LEGEND

SYMBOL	DESCRIPTION
AV	ANGLE VALVE
BV	BALL VALVE
CV	CHECK VALVE
DV	DRAIN VALVE
	COCK VALVE
FCO / GCO	FLOOR /GCO CLEANOUT
FD	FLOOR DRAIN
FS	FLOOR SIPHON
GV	GATE VALVE
HB	HOSE BIBB, PLAN
	INSPECTION MANHOLE
	PIPE TURNING DOWN
	PIPE TURNING UP
WCO	WALL CLEANOUT
	P-TRAP
	REDUCER-INCREASER
	SUPPORT LOCATION
	Y-TYPE STRAINER
U	UNION
WHA	WATER HAMMER ARRESTOR

ABBREVIATION	DESCRIPTION
A.F.F.	ABOVE FINISHED FLOOR
℄	CENTER LINE
CO	CLEANOUT
COYB	CLEANOUT IN YARD BOX
CW	COLD WATER PIPES
HW	HOT WATER PIPES
SP	SOIL PIPE
U/G	UNDER GROUND
VP	VENT PIPE
V.R.V	VACUUM RELIEF VALVE
WCO	WALL CLEANOUT
WHA	WATER HAMMER ARRESTOR
WP	WASTE PIPE
VTR	VENT THRU ROOF
AFF	ABOVE FINISH FLOOR
AVTR	ACID VENT THRU ROOF
WH	WALL HYDRANT W/VACUUM BREAKER
OP	OPERATING

EQUIPMENT IDENTIFICATION

W-XX — ELECTRICAL WATER HEATER; UNIT NUMBER

REV	DATE	BY	SUB	APP	DESCRIPTION
0	06/30/10				SITE ADAPT CONSTRUCTION PLANS

DESIGNED D. HOYLE
DRAWN D. HOYLE
CHECKED J. MARIANETTI
IN CHARGE D. WHEELER
DATE 30 JUNE 2010

AFGHAN NATIONAL SECURITY FORCE COMPREHENSIVE PLAN FOR FACILITIES DEVELOPMENT

MINISTRY OF INTERIOR (MoI) – AFGHAN NATIONAL POLICE PROVINCIAL FIRE STATION – TYPE-B

GUARD HOUSE PLUMBING PLANS, SCHEDULES & LEGEND

SCALE AS SHOWN

PROJECT NO. 6151-08-0328

03-P-101

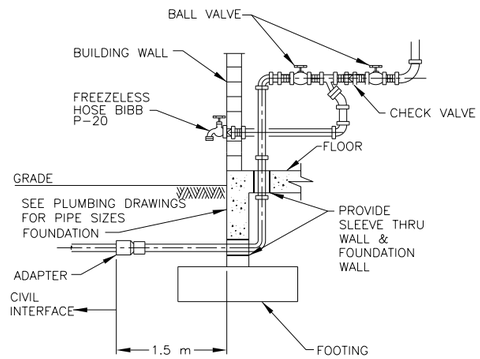

NOTE:
PROVIDE 40mm THICK PIPE INSULATION WITH WEATHERPROOF METAL CLADDING ON EXPOSED WATER SERVICE PIPING

F WATER SERVICE ENTRACE DETAIL

03-P-501 SCALE NTS

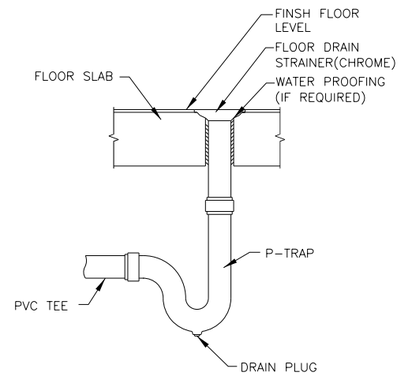

E TYP. FLOOR DRAIN DETAIL

03-P-501 SCALE NTS

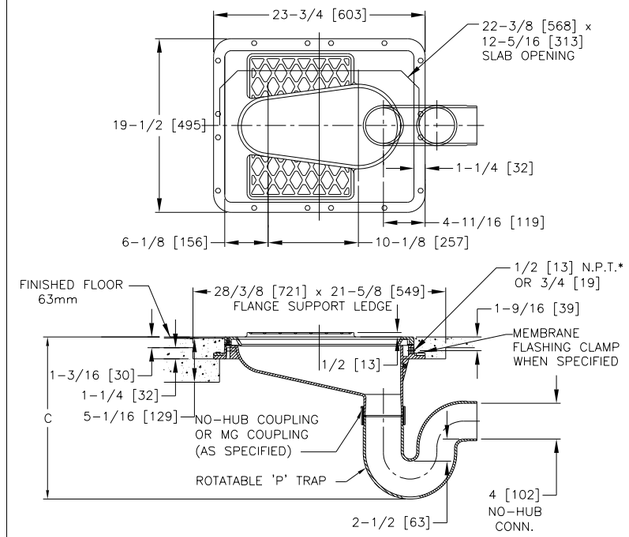

D WATER CLOSET-EASTERN

03-P-501 SCALE NTS

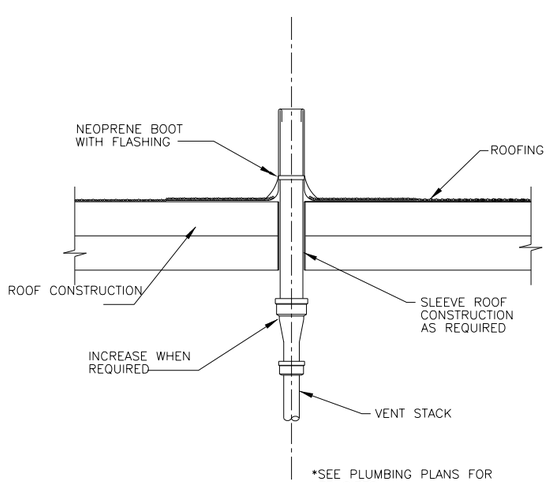

*SEE PLUMBING PLANS FOR VTR SIZES
*SEE ARCHITECTURAL PLANS ROOF FLASHING REQUIRMENTS

C VENT THRU ROOF DETAIL SECTION

03-P-501 SCALE NTS

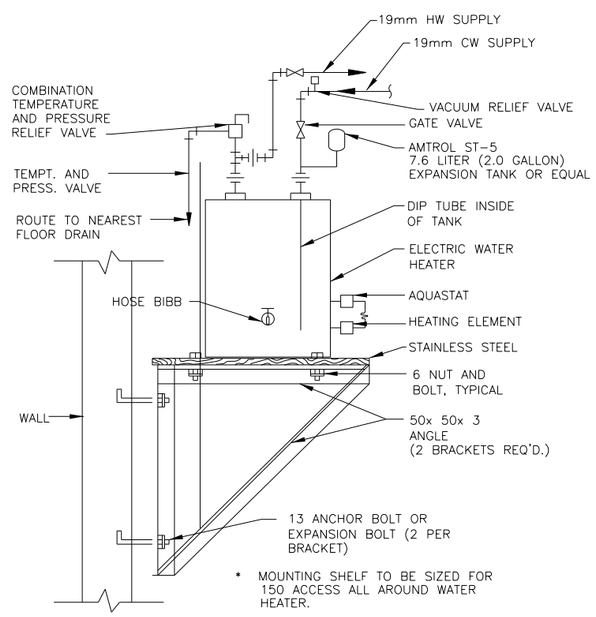

IF WATER HEATER COMES EQUIPPED WITH A MOUNTING BRACKET, CONTRACTOR WILL SUBMIT TO THE ENGINEER FOR APPROVAL, ALTERNATE INSTALLATION DETAIL AS RECOMMENDED BY HEATER MANUFACTURER FOR THE TYPE OF WALL (CMU,METAL STUD, ETC.) APPLICABLE

B WALL MOUNTED ELECTRIC WATER DETAIL

03-P-501 SCALE NTS

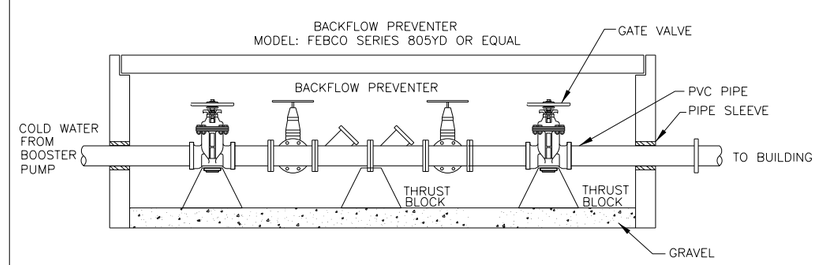

A VALVE BOX DETAIL

03-P-501 SCALE NTS

REV	DATE	BY	SUB'APP	DESCRIPTION
0	06/30/10			SITE ADAPT CONSTRUCTION PLANS

DESIGNED: HOYLE
DRAWN: D. HOYLE
CHECKED: J. MARIANETTI
IN CHARGE: D. WHEELER
DATE: 30 JUNE 2010

AFGHAN NATIONAL SECURITY FORCE COMPREHENSIVE PLAN FOR FACILITIES DEVELOPMENT

MINISTRY OF INTERIOR (MoI) – AFGHAN NATIONAL POLICE PROVINCIAL FIRE STATION – TYPE-B

GUARD HOUSE PLUMBING DETAILS

SCALE: AS SHOWN

PROJECT NO. 6151-08-0328

03-P-501

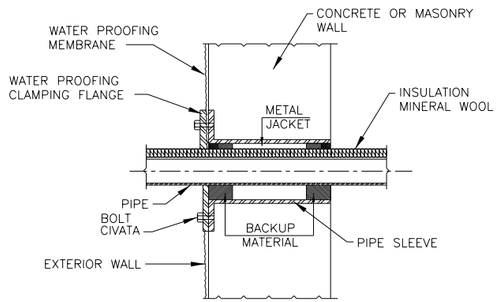

E | PIPE SLEEVE THRU EXT. WALL OR FOUNDATION B/G
03-P-502 SCALE NTS B

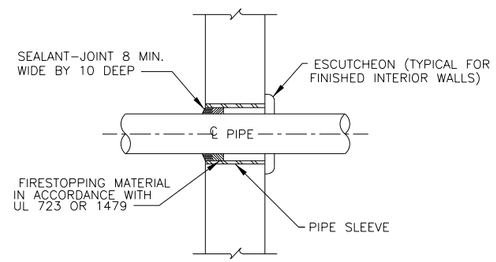

D | TYP. WALL PENETRATION DETAIL
03-P-502 SCALE NTS

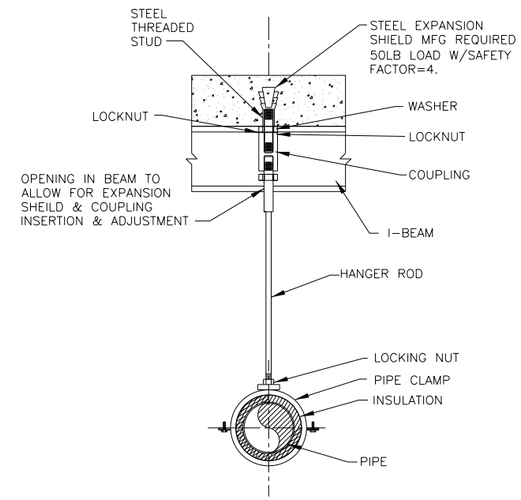

C | PIPE HANGER DETAIL
03-P-502 SCALE NTS

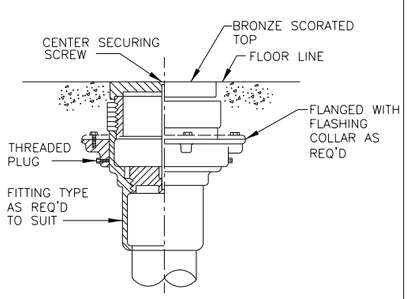

B | FLOOR CLEANOUT DETAIL
03-P-502 SCALE NTS

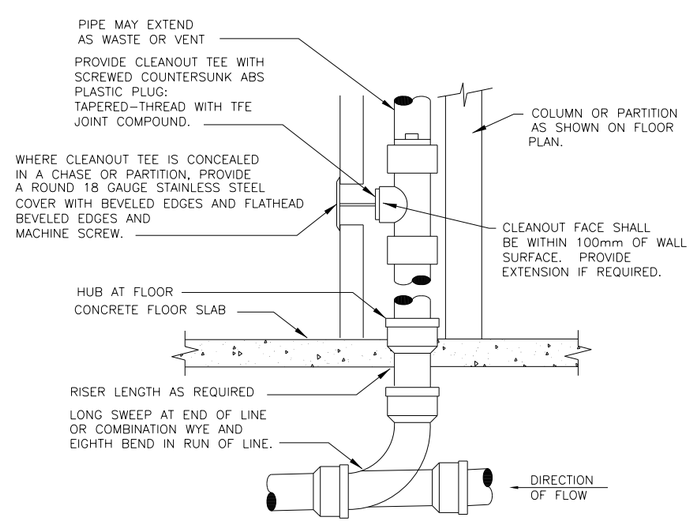

A | WALL CLEANOUT DETAIL
03-P-502 SCALE NTS

REV	DATE	BY	SUB'APP	DESCRIPTION
0	06/30/10			SITE ADAPT CONSTRUCTION PLANS

DESIGNED D. HOYLE
DRAWN D. HOYLE
CHECKED J. MARIANETTI
IN CHARGE D. WHEELER
DATE 30 JUNE 2010

AFGHAN NATIONAL SECURITY FORCE COMPREHENSIVE PLAN FOR FACILITIES DEVELOPMENT

MINISTRY OF INTERIOR (MoI) – AFGHAN NATIONAL POLICE PROVINCIAL FIRE STATION – TYPE-B

GUARD HOUSE PLUMBING DETAILS

SCALE AS SHOWN

PROJECT NO. 6151-08-0328

03-P-502

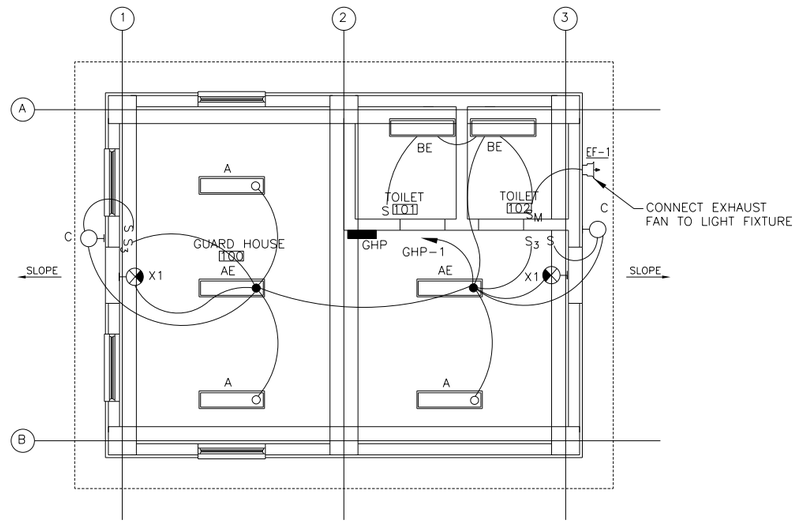

0 500 1000 2000

SCALE: 1:50

1 GUARD HOUSE LIGHTING FLOOR PLAN

03-E-101 SCALE 1:50

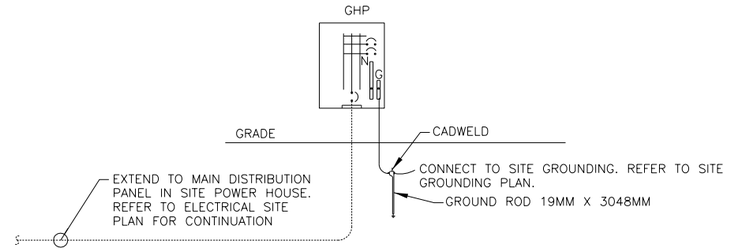

A POWER RISER DIAGRAM

03-E-101 SCALE N.T.S.

GENERAL NOTES:

1. SEE SHEET 00-E-001 AND 00-E-002 FOR LEGEND, ABBREVIATIONS AND GENERAL NOTES.
2. EXHAUST FAN AND ELECTRIC UNIT HEATER DISCONNECT SWITCH PROVIDED BY MECHANICAL.
3. COORDINATE MECHANICAL AND PLUMBING EQUIPMENT WITH MECHANICAL AND PLUMBING DRAWINGS.
4. ALL EXPOSED INTERIOR CONDUITS SHALL BE RGS THREADED (TYPICAL FOR INTERIORS).
5. PANEL BOARD GHP SHALL BE SUITABLE FOR USE AS SERVICE EQUIPMENT.

KEY NOTE:

(1) PROVIDE 30A/NF/NEMA 1 DISCONNECT SWITCH.

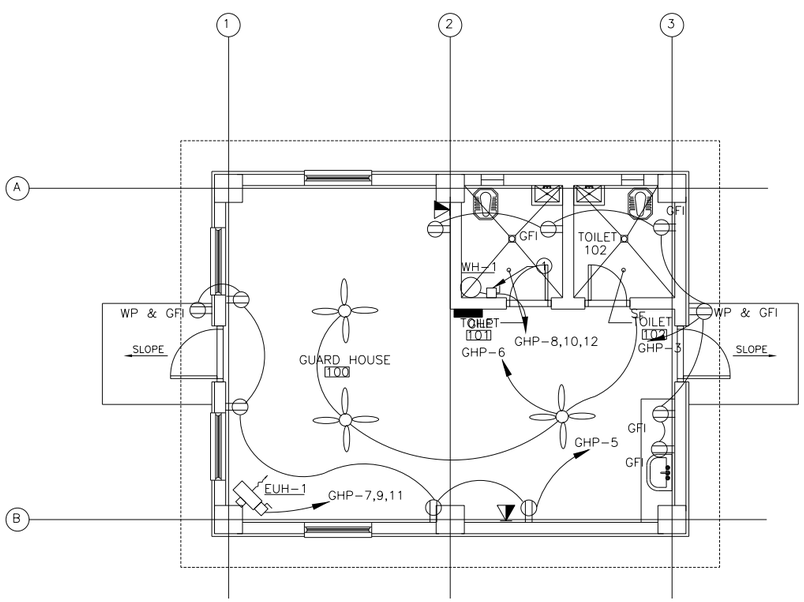

0 500 1000 2000

SCALE: 1:50

2 GUARD HOUSE POWER FLOOR PLAN

03-E-101 SCALE 1:50

PANEL GHP TYPE MAIN BREAKER K.A.I.C 10,000 MIN. MOUNTING SURFACE

VOLTAGE 380/220V,3Ø,4W MAINS 100 AMP ENTRY BOTTOM LOCATION GUARD HOUSE ROOM #101

POLE	TRIP	CONDUCTORS IN MM²	CONDUIT	DESIGNATION	KVA	NO	PHASE ØA	PHASE ØB	PHASE ØC	NO	KVA	DESIGNATION	CONDUIT	CONDUCTORS IN MM²	TRIP	POLE
1	20A	2#4+#4 GND	21MM	LIGHTS	1.0	1	1.0			2		SPARE			20A	1
1	20A	2#4+#4 GND	21MM	RECEPTACLES	1.1	3		2.1		4	1.0	VEHICLE BARRIER	21MM	2#4+#4 GND	20A	1
1	20A	2#4+#4 GND	21MM	RECEPTACLES	.9	5			1.2	6	.3	CEILING FANS	21MM	2#4+#4 GND	20A	1
3	20A	3#4+#4 GND	21MM	EUH-1	0.85	7	2.85			8	2.0	WH-1	21MM	3#4+#4 GND	20A	3
					0.85	9		2.85		10	2.0					
					0.85	11			2.85	12	2.0					
1	20A			SPARE		13	1.0			14	1.0	VEHICLE BARRIERS	21MM	2#4+#4 GND	20A	1
1	20A			SPARE		15				16		SPARE			20A	1
1	20A			SPARE		17				18		SPARE			20A	1
1	20A			SPARE		19				20		SPARE			20A	1
1	20A			SPARE		21				22		SPARE			20A	1
1	20A			SPARE		23				24		SPARE			20A	1
1	20A			SPARE		25				26		SPARE			20A	1
1	20A			SPARE		27				28		SPARE			20A	1
1	20A			SPARE		29				30		SPARE			20A	1
					TOTAL:		4.85	4.95	4.05	13.85 KVA /.66 X 1.25 =26.2 AMPS USE 100 AMP PANEL						

LIGHTING FIXTURE SCHEDULE

MARK	LAMPS	VOLTAGE	FIXTURE DISCRIPTION	MOUNTING	NOTES
A	2-T832W	220	SURFCE MOUNTED FLUORESCENT WRAPAROUND WITH ACRYLIC LENS WITH HPF ELECTRONIC BALLAST	SURFACE	
AE	2-T832W	220	SAME AS LIGHTING FIXTURE TYPE (A), BUT WITH EMERGENCY BATTERY BACK UP	SURFACE	
BE	2-T832W	220	BRACKET MOUNTED LINEAR FLUORESCENT WITH ACRYLIC LENS WITH HPF ELECTRONIC BALLAST AND UP/DOWN LIGHT WITH EMERGENCY BACK UP BATTERY	BRACKET	OVER LAVATORY
C	1-100MH	220	WALL MOUNTED HID AREA FLOOD LIGHT WITH DARK BRONZE ALUMINUM HOUSING , HPF BALLAST AND ACRYLIC LENS.	BRACKET	
X1	LED	220	UNIVERSAL MOUNT EXIT LIGHT. POLYCARBONITE HOUSING, RED STENCIL FACE LETTERS AND DIRECTIONAL ARROW KNOCKOUTS.	WALL	CONNECT UNSWITCHED

REV	DATE	BY	SUB	APP	DESCRIPTION
0	06/30/10				SITE ADAPT CONSTRUCTION PLANS

DESIGNED J. GILMER
DRAWN L. KRAVCHUK
CHECKED B. CRAWFORD
IN CHARGE D. WHEELER
DATE 30 JUNE 2010

AFGHAN NATIONAL SECURITY FORCE COMPREHENSIVE PLAN FOR FACILITIES DEVELOPMENT

MINISTRY OF INTERIOR (MoI) - AFGHAN NATIONAL POLICE PROVINCIAL FIRE STATION - TYPE-B

GUARD HOUSE ELECTRICAL PLANS, SCHEDULES & DETAILS

SCALE AS SHOWN

PROJECT NO. 6151-08-0328

03-E-101

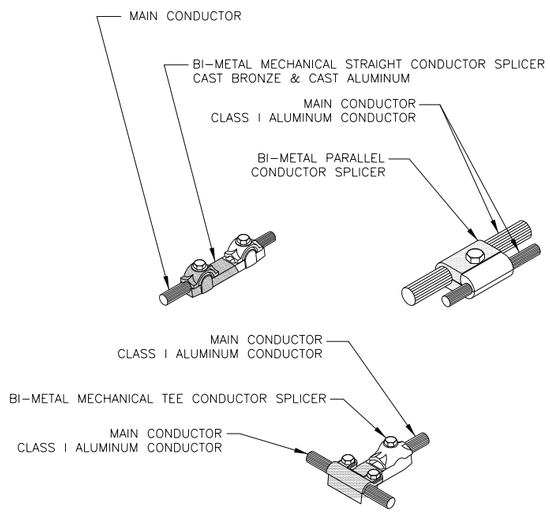

A BI-METAL CABLE CLAMPS AND SPLICERS

03-E-102 NOT TO SCALE

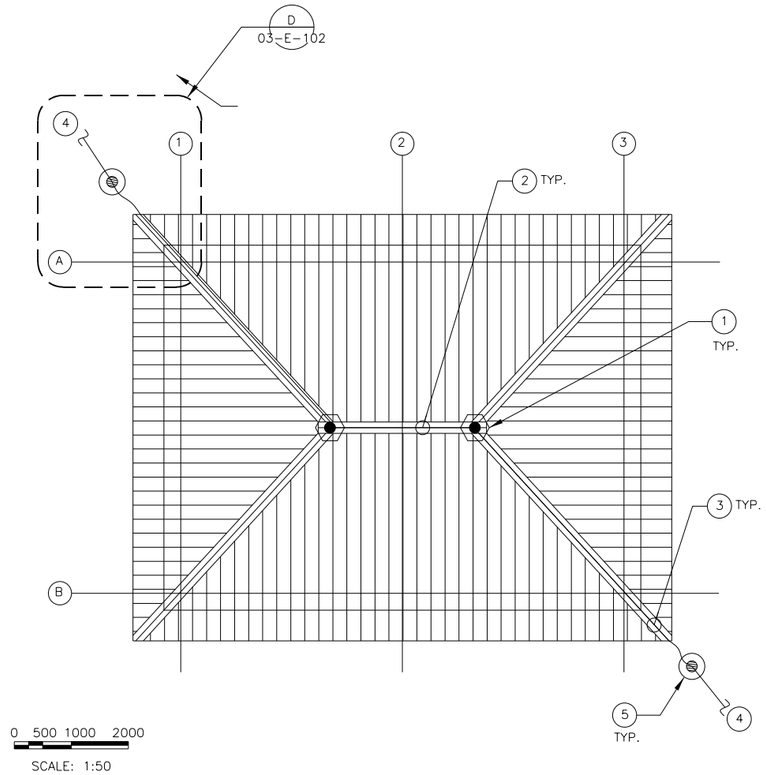

1 GUARD HOUSE ROOF PLAN AND LIGHTNING PROTECTION

03-E-102 SCALE 1:50

GENERAL NOTES:

1. SEE SHEET 00-E-001 AND 00-E-002 FOR LEGEND, ABBREVIATIONS AND GENERAL NOTES.
2. CLASS I COMPONENTS SHALL APPLY FOR THE GUARD HOUSE, HEIGHT IS NOT MORE THAN 23M (75 FEET).
3. ALL LIGHTNING PROTECTION CONDUCTORS SHALL BE FASTENED NOT MORE THAN 914.4MM (3 FEET) MAXIMUM SPACING.
4. CONDUCTORS SHALL INTERCONNECT ALL AIR TERMINALS AND SHALL FORM A TWO-WAY PATH FROM EACH AIR TERMINAL HORIZONTALLY OR DOWNWARD TO CONNECTORS WITH GROUND RODS.
5. THE INSTALLATION OF THE LIGHTNING PROTECTION SYSTEM SHALL MEET THE REQUIREMENTS OF NATIONAL FIRE PROTECTION ASSOCIATION 780 AND UNDER WRITERS LAB UL96/96A.
6. AIR TERMINALS SHALL NOT BE LESS THAN 254MM (10 INCHES) LONG ABOVE THE OBJECT TO BE PROTECTED WHEN THE INTERVAL BETWEEN AIR TERMINALS IS NOT MORE THAN 6M (20 FEET).
7. AIR TERMINALS SHALL BE PLACED ON ALL CHIMNEYS, VENTS, AND ROOF TOP METAL BODIES WHEN SUCH CHIMNEYS, VENTS OR ROOF TOP METAL BODIES ARE NOT WITHIN A ZONE OF PROTECTION.
8. AT LEAST TWO DOWN CONDUCTORS SHALL BE INSTALLED.
9. RADIUS OF BEND SHALL NOT BE LESS THAN 203MM (8 INCHES).
10. PROVIDE #70MM² (#2/0 AWG) COPPER GROUNDING CONDUCTORS FOR THE LIGHTNING PROTECTION GROUNDING. ALL EXTERIOR GROUNDING CONDUCTORS SHALL BE BURIED A MINIMUM OF 762MM (30") BELOW GRADE OR 152.4MM (6") BELOW FROST LINE, WHICHEVER IS GREATER.

KEY NOTES:

(1) AIR TERMINAL SHALL BE 12.7MMX457MM (1/2" X 18") ALUMINUM, 90 DEGREES VERTICAL. SEE DETAIL B/03-E-102.

(2) MAIN CONDUCTORS SHALL BE (28 STRAND, 14 GAUGE CLASS 1 ALUMINUM ROOF CABLE, 58.9 KG/304.8M (130 POUNDS/1000 FEET), 15.875 MM DIAMETER, 70 MM² (#1/0)).

(3) ALUMINUM DOWN CONDUCTORS SHALL BE CONNECTED TO COPPER DOWN CONDUCTOR AT LEAST 457MM (18 INCHES) ABOVE GRADE LEVEL. BIMETALLIC CONNECTORS WILL BE USED. SEE DETAIL A ON 03-E-102 FOR BIMETALLIC CONNECTORS.

(4) SEE SHEET 00-E-102 FOR CONTINUATION TO SITE GROUNDING PLAN.

(5) PROVIDE AND INSTALL 19MMX3048MM (3/4" X 10'-0") COPPER CLAD STEEL GROUND RODS. IF ROCK IS ENCOUNTERED, GROUND ROD MAY BE INSTALLED WITH A MAXIMUM VARIATION OF 30 DEGREES FROM VERTICAL.

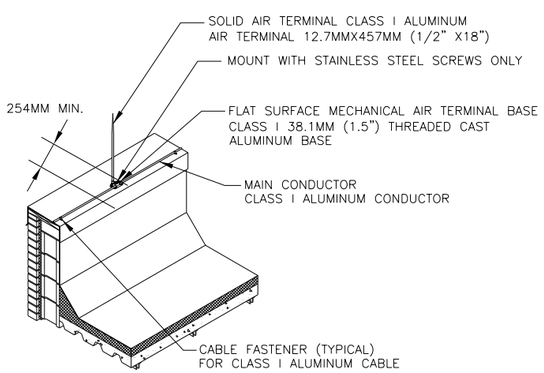

B AIR TERMINAL DETAILS

03-E-102 NOT TO SCALE

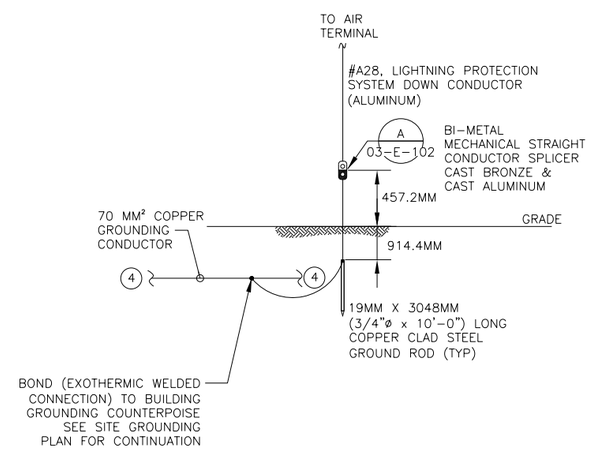

C BONDING LIGHTNING PROTECTION TO GROUNDING

03-E-102 NOT TO SCALE

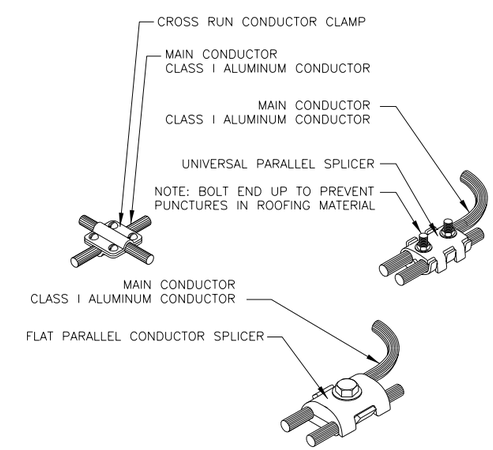

D CABLE CLAMPS AND SPLICERS

03-E-102 NOT TO SCALE

REV	DATE	BY	SUB	APP	DESCRIPTION
0	06/30/10				SITE ADAPT CONSTRUCTION PLANS

DESIGNED M. ESTAFANOUS
DRAWN L. KRAVCHUK
CHECKED B. CRAWFORD
IN CHARGE D. WHEELER
DATE 30 JUNE 2010

AFGHAN NATIONAL SECURITY FORCE
COMPREHENSIVE PLAN FOR
FACILITIES DEVELOPMENT

MINISTRY OF INTERIOR (MoI) – AFGHAN NATIONAL POLICE
PROVINCIAL FIRE STATION – TYPE-B

GUARD HOUSE ROOF LIGHTNING PLAN

SCALE AS SHOWN

PROJECT NO. 6151-08-0328

03-E-102

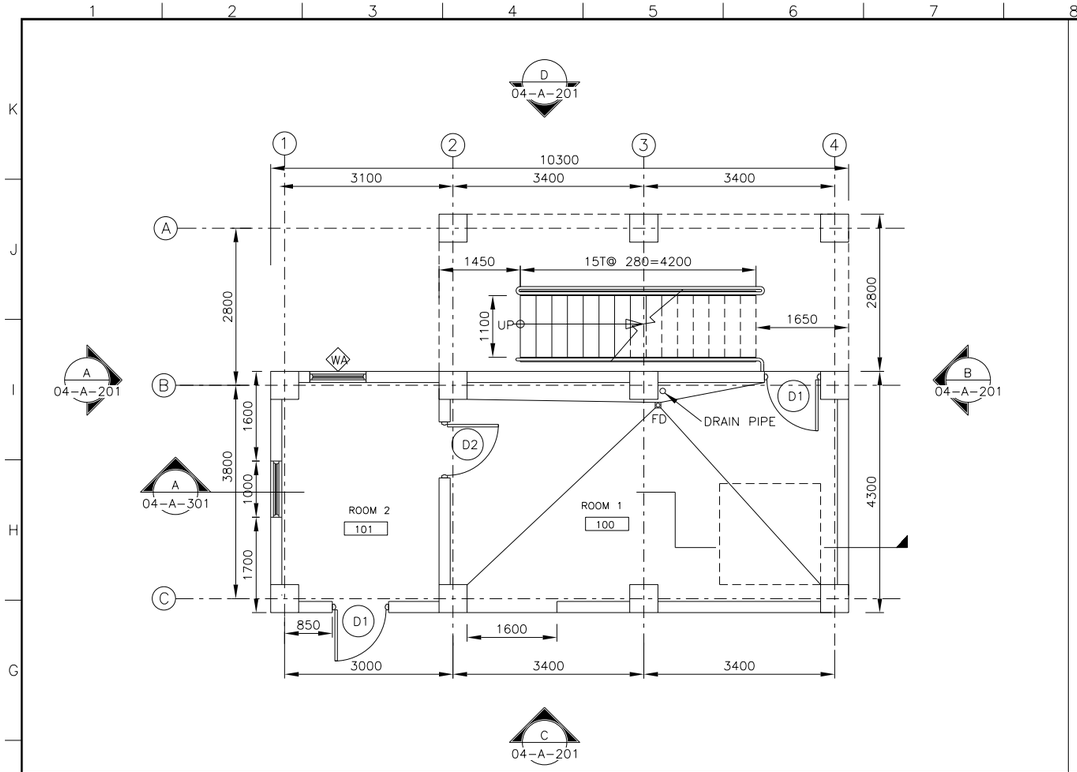

4 1ST FLOOR PLAN

04-A-101 1:50

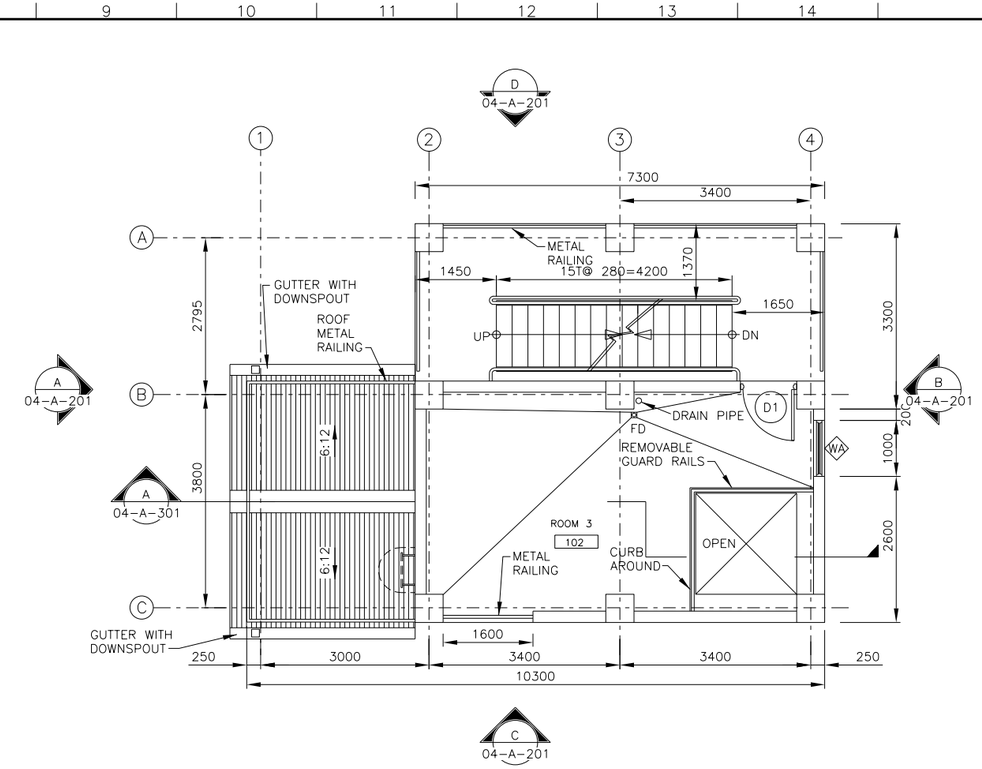

3 2ND FLOOR PLAN

04-A-101 1:50

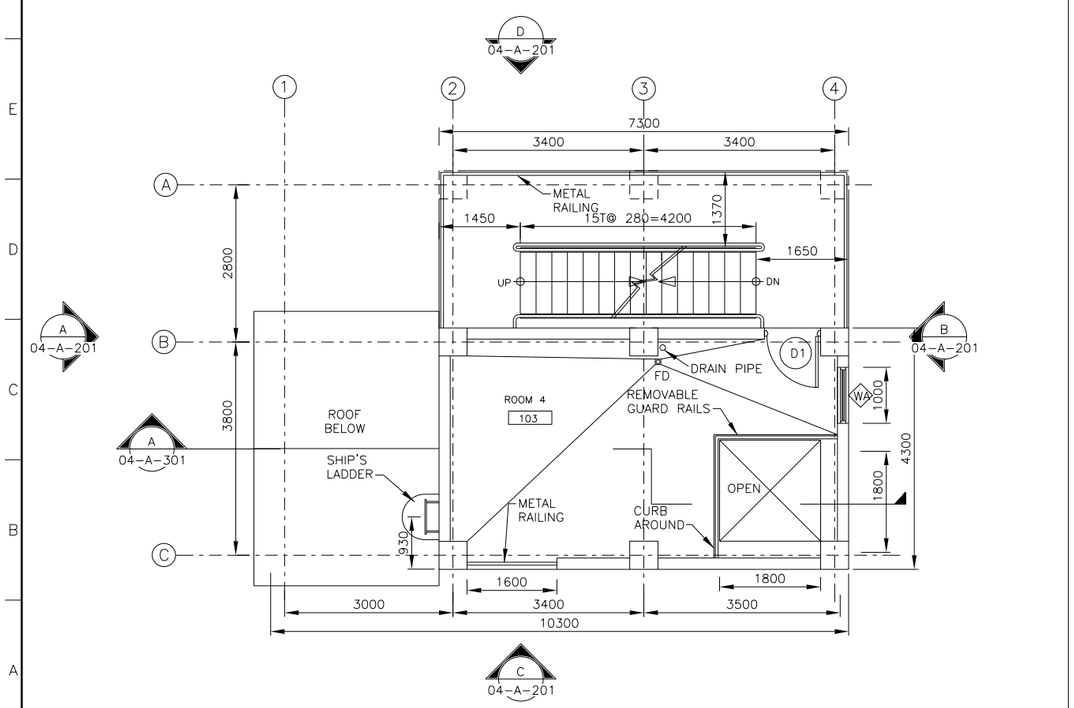

2 3RD FLOOR PLAN

04-A-101 1:50

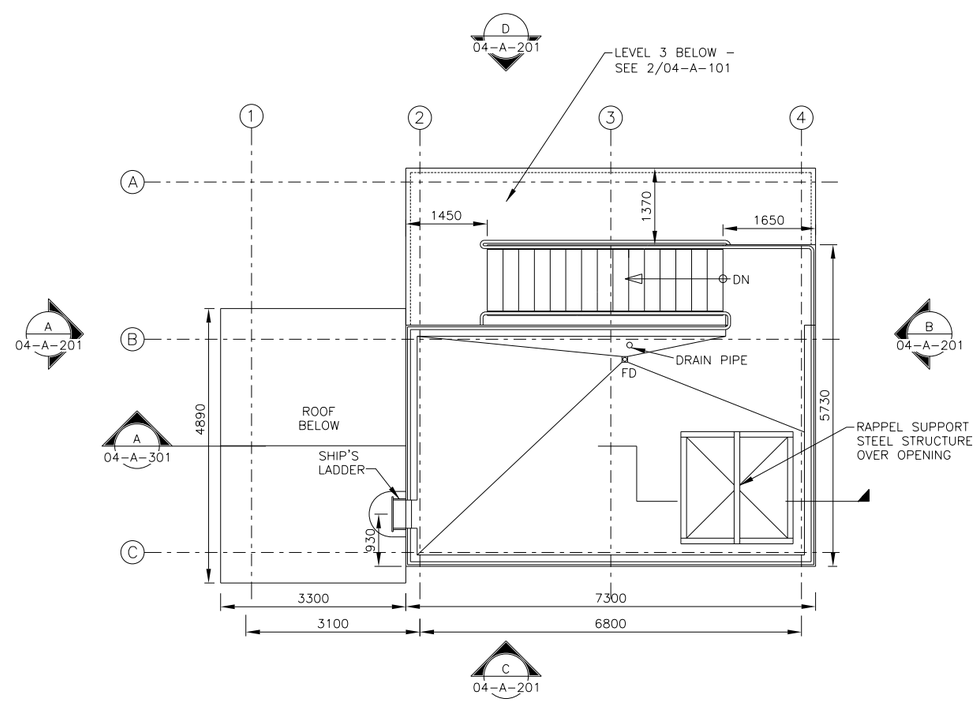

1 ROOF PLAN

04-A-101 1:50

REV	DATE	BY	SUB	APP	DESCRIPTION
0	06/30/10				SITE ADAPT CONSTRUCTION PLANS

DESIGNED: N. SPAHIC
DRAWN: C. JUNG
CHECKED: J. ANDERSON
IN CHARGE: D. WHEELER
DATE: 30 JUNE 2010

AFGHAN NATIONAL SECURITY FORCE
COMPREHENSIVE PLAN FOR
FACILITIES DEVELOPMENT

MINISTRY OF INTERIOR (MoI) – AFGHAN NATIONAL POLICE
PROVINCIAL FIRE STATION – TYPE-B

TRAINING TOWER FLOOR PLANS

SCALE: AS SHOWN

PROJECT NO. 6151-08-0328

04-A-101

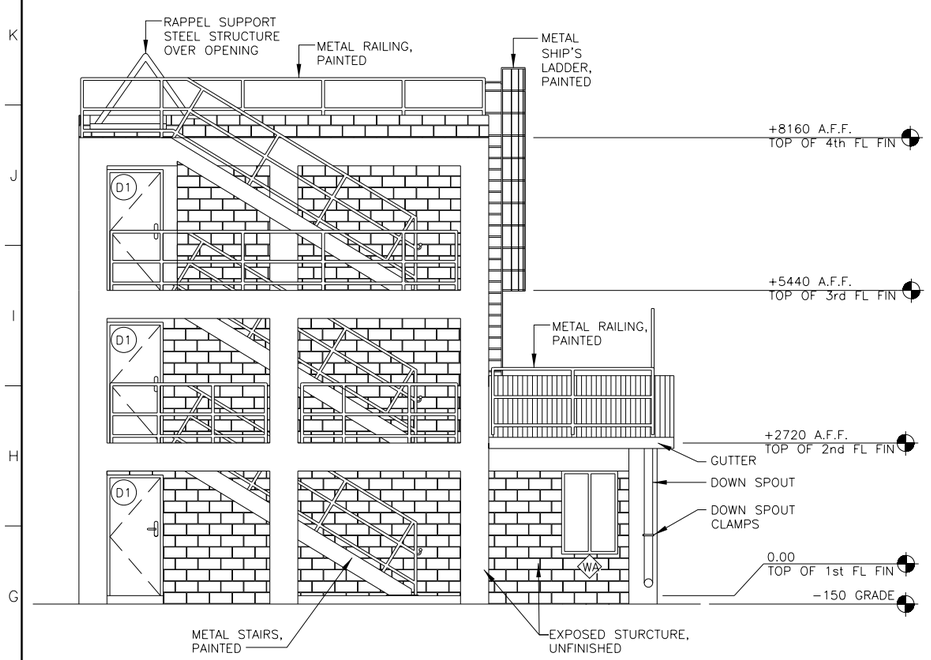

D ELEVATION
04-A-201 1:50

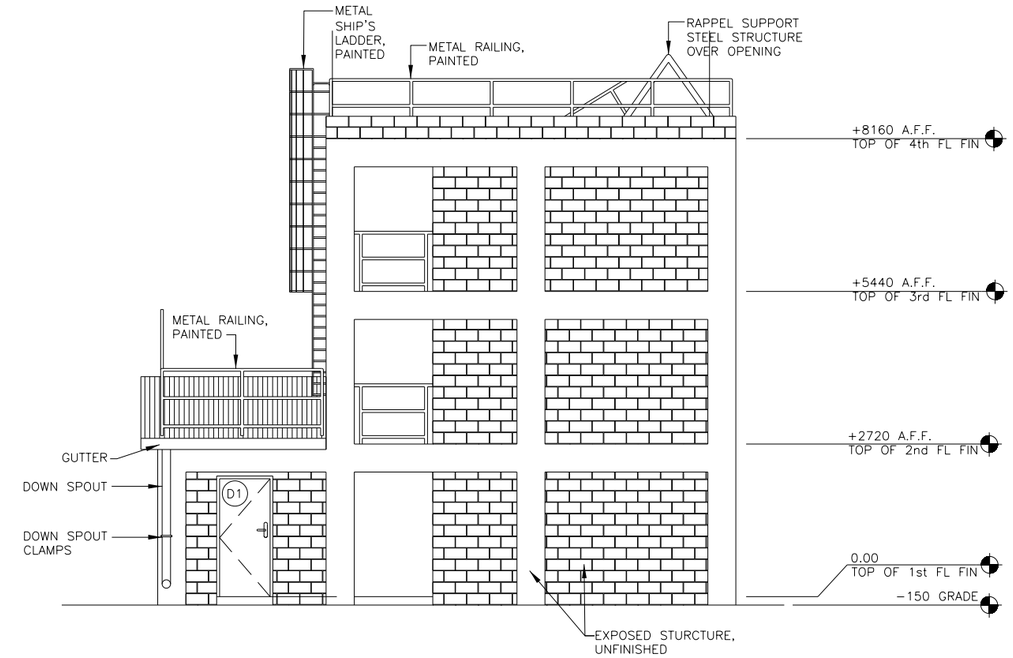

C ELEVATION
04-A-201 1:50

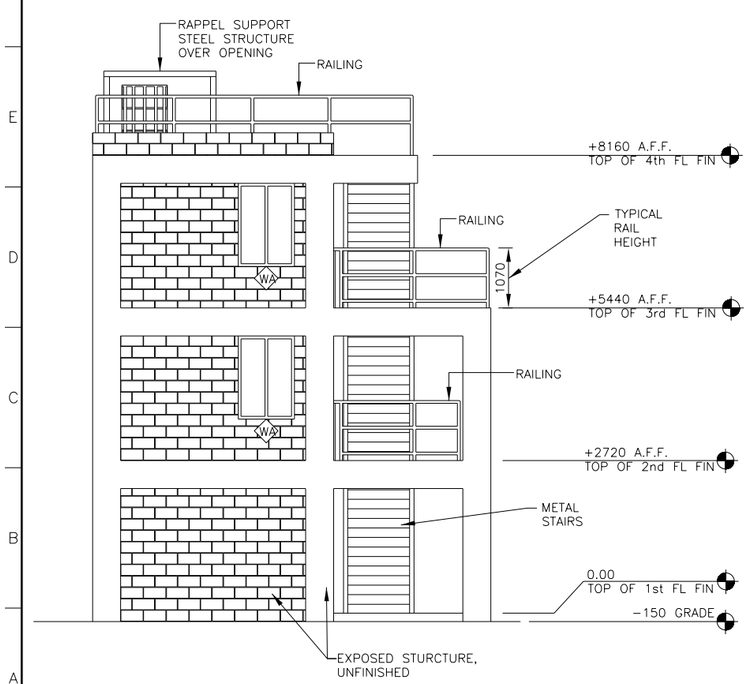

B ELEVATION
04-A-201 1:50

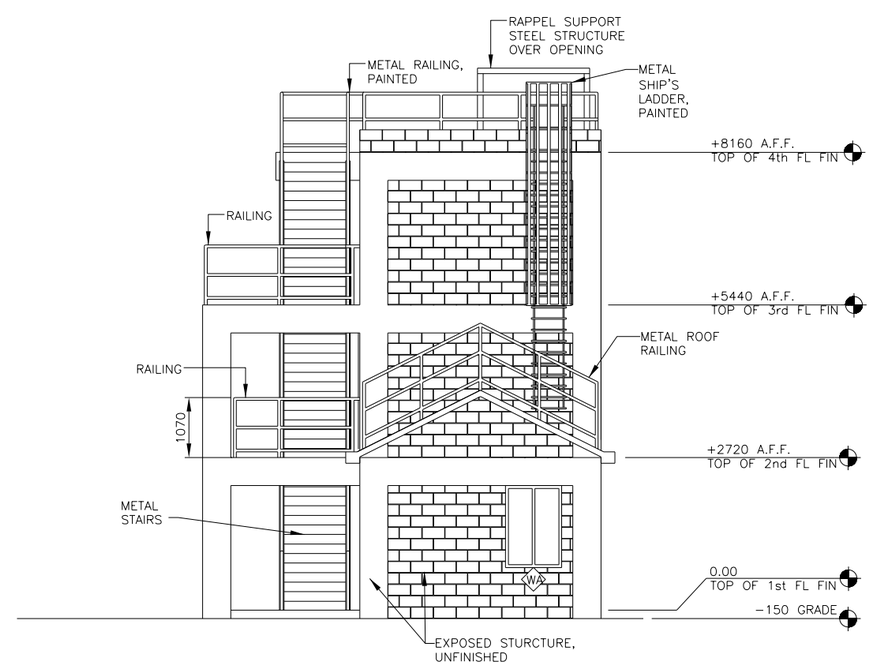

A ELEVATION
04-A-201 1:50

REV	DATE	BY	SUB/APP	DESCRIPTION
0	06/30/10			SITE ADAPT CONSTRUCTION PLANS

DESIGNED N. SPAHIC
DRAWN C. JUNG
CHECKED J. ANDERSON
IN CHARGE D. WHEELER
DATE 30 JUNE 2010

AFGHAN NATIONAL SECURITY FORCE
COMPREHENSIVE PLAN FOR FACILITIES DEVELOPMENT

MINISTRY OF INTERIOR (MoI) – AFGHAN NATIONAL POLICE
PROVINCIAL FIRE STATION – TYPE-B

TRAINING TOWER ELEVATIONS

SCALE AS SHOWN

PROJECT NO. 6151-08-0328

04-A-201

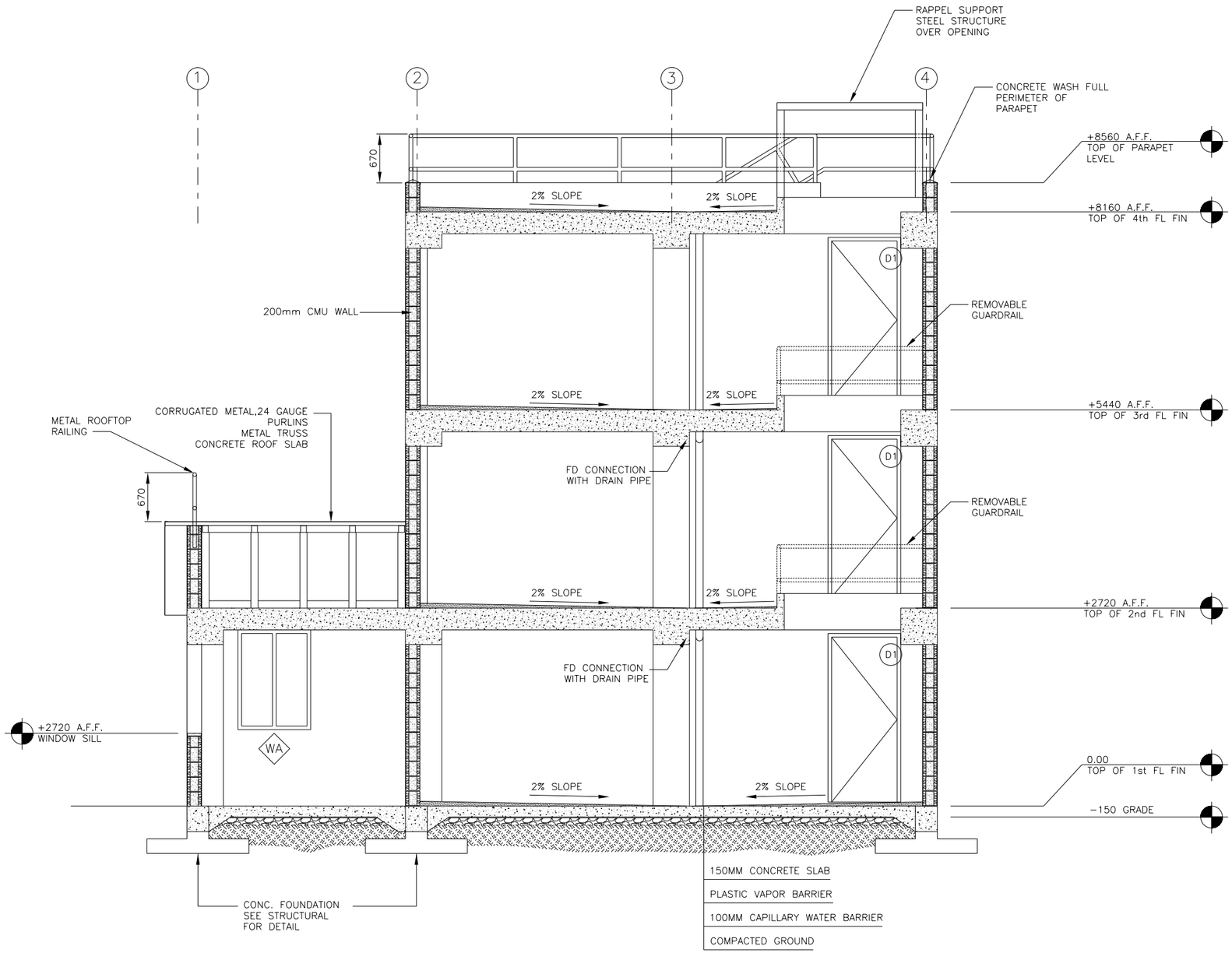

A SECTION

04-A-301 1:30

REV	DATE	BY	SUB	APP	DESCRIPTION
0	06/30/10				SITE ADAPT CONSTRUCTION PLANS

DESIGNED N. SPAHIC
DRAWN C. JUNG
CHECKED J. ANDERSON
IN CHARGE D. WHEELER
DATE 30 JUNE 2010

AFGHAN NATIONAL SECURITY FORCE
COMPREHENSIVE PLAN FOR FACILITIES DEVELOPMENT

MINISTRY OF INTERIOR (MoI) - AFGHAN NATIONAL POLICE
PROVINCIAL FIRE STATION - TYPE-B

TRAINING TOWER SECTION

SCALE AS SHOWN

PROJECT NO. 6151-08-0328

04-A-301