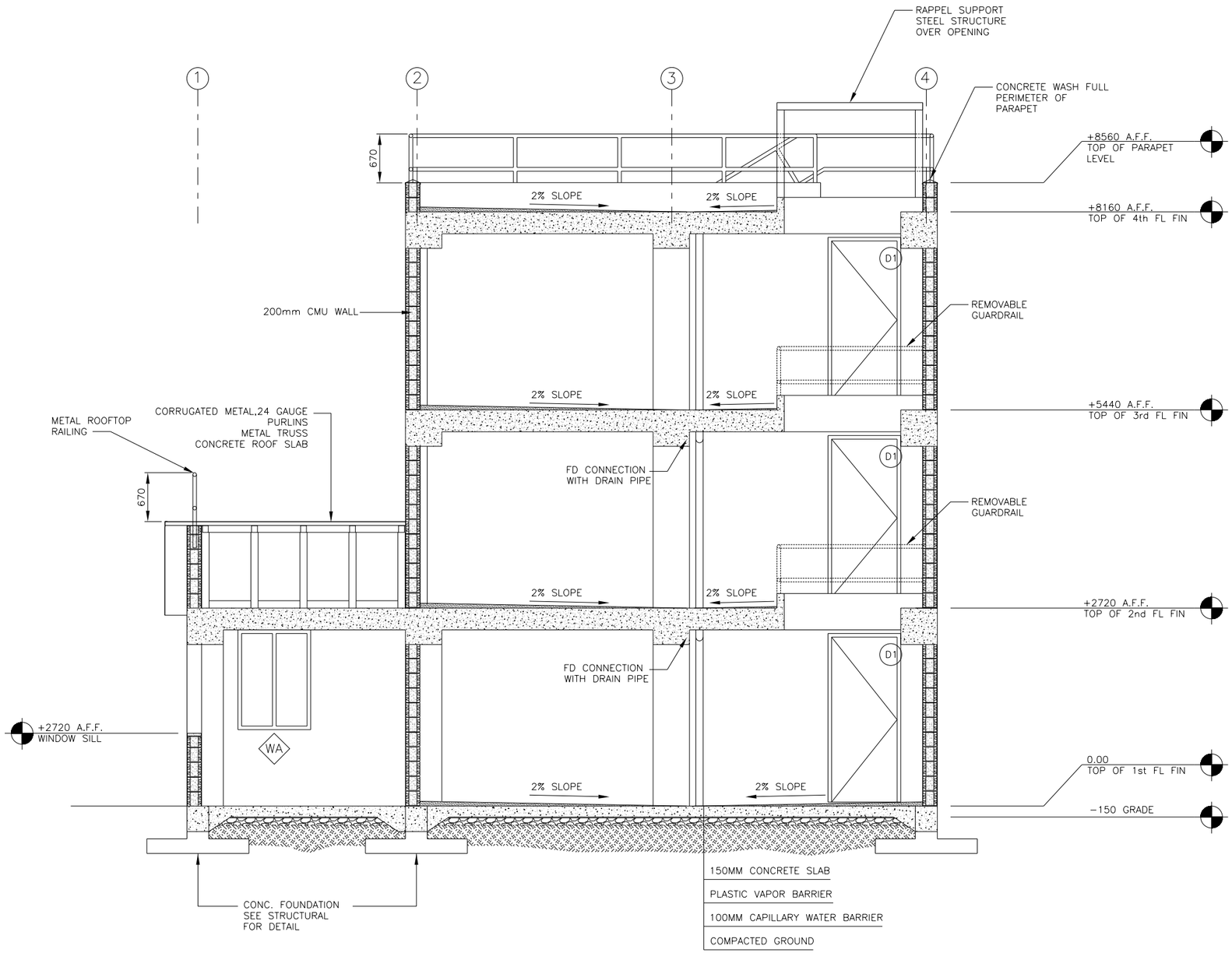

A SECTION

04-A-301 1:30

REV	DATE	BY	SUB	APP	DESCRIPTION
0	06/30/10				SITE ADAPT CONSTRUCTION PLANS

DESIGNED N. SPAHIC
DRAWN C. JUNG
CHECKED J. ANDERSON
IN CHARGE D. WHEELER
DATE 30 JUNE 2010

AFGHAN NATIONAL SECURITY FORCE
COMPREHENSIVE PLAN FOR FACILITIES DEVELOPMENT

MINISTRY OF INTERIOR (MoI) - AFGHAN NATIONAL POLICE
PROVINCIAL FIRE STATION - TYPE-B

TRAINING TOWER SECTION

SCALE AS SHOWN

PROJECT NO. 6151-08-0328

04-A-301

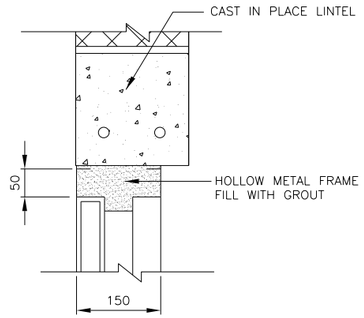

I EXTERIOR DOOR HEADER DETAIL
04-A-501 SCALE: N.T.S.

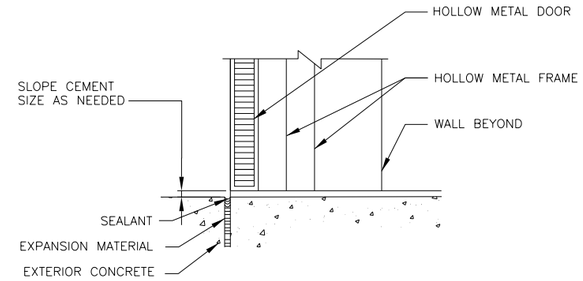

H EXTERIOR DOOR THRESHOLD
04-A-501 SCALE: N.T.S.

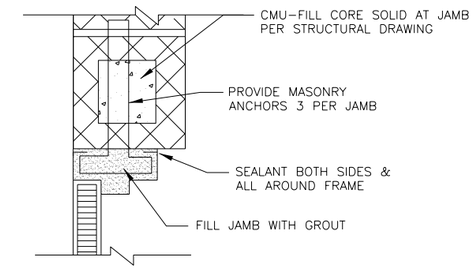

G EXTERIOR DOOR JAMB
04-A-501 SCALE: N.T.S.

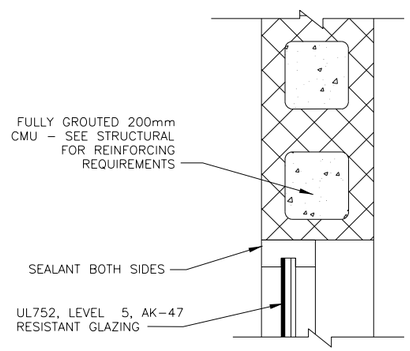

F WINDOW JAMB
04-A-501 SCALE: N.T.S.

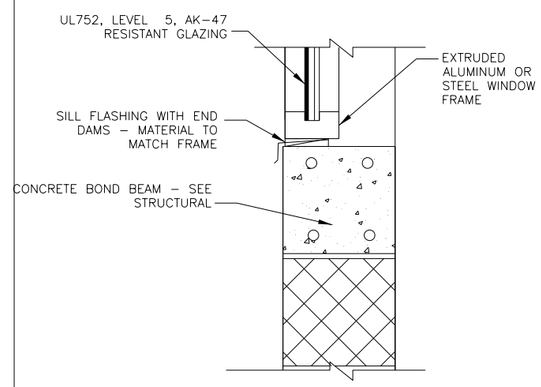

E WINDOW SILL
04-A-501 SCALE: N.T.S.

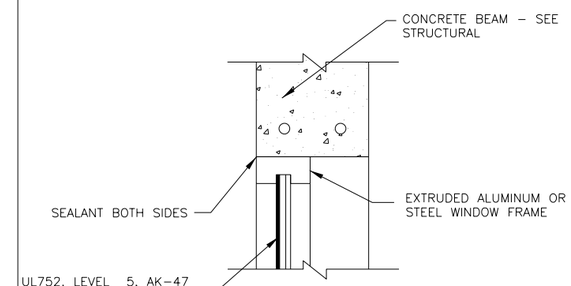

WINDOW TYPE NOTES:

1. WINDOW FRAME SHOULD BE EXTRUDED ALUMINUM OR STEEL
2. ALL WINDOW AND GLAZING SHALL MEET THE REQUIREMENTS UL752, LEVEL 5 RESISTANCE FOR PROTECTION AGAINST AK-47 FIRE.

D WINDOW HEADER
04-A-501 SCALE: N.T.S.

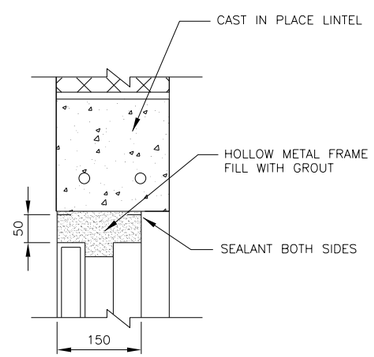

C INTERIOR DOOR HEADER DETAIL
04-A-501 SCALE: N.T.S.

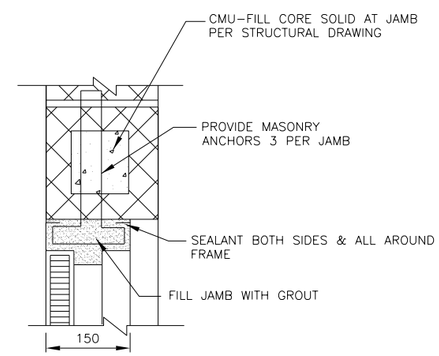

B INTERIOR DOOR JAMB
04-A-501 SCALE: N.T.S.

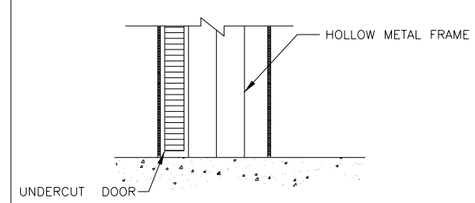

A INTERIOR DOOR THRESHOLD
04-A-501 SCALE: N.T.S.

REV	DATE	BY	SUB	APP	DESCRIPTION
0	06/30/10				SITE ADAPT CONSTRUCTION PLANS

DESIGNED N. SPAHIC
DRAWN C. JUNG
CHECKED J. ANDERSON
IN CHARGE D. WHEELER
DATE 30 JUNE 2010

AFGHAN NATIONAL SECURITY FORCE
COMPREHENSIVE PLAN FOR FACILITIES DEVELOPMENT

MINISTRY OF INTERIOR (MoI) - AFGHAN NATIONAL POLICE
PROVINCIAL FIRE STATION - TYPE-B

TRAINING TOWER DOOR & WINDOW DETAILS

SCALE AS SHOWN

PROJECT NO. 6151-08-0328

04-A-501

DOOR SCHEDULE

DOOR No.	DIMENSION			DOOR TYPE	DOOR MAT.	FRAME MAT.	HARDWARE	THRESHOLD	FIRE RATED	MATERIAL
	WIDTH	HGT.	THK.							
D–1	914	2150	45	1	MTL	HM	HW–1	ALUM	–	EXTERIOR DOOR WITH STRIPPING
D–2	914	2150	45	2	WD	HM	HW–2	ALUM	–	WOOD DOOR WITH PAINT

WINDOW SCHEDULE

WINDOW NUMBER	DIMENSION		WINDOW MAT.	WINDOW TYPE	OPENING SYSTEM	DESCRIPTION
	WIDTH	HEIGHT				
WA	1000	1480	ALUM	A	SLIDER	5MM GLASS ALUM CONSTRUCTION AND FIXED INSECT METAL SCREEN

E DOOR & WINDOW SCHEDULE
04–A–601

HARDWARE NOTES:

HW–1 1–1/2 PR HINGES
1 EA LOCKSET F04, OFFICE DOOR LOCK W/LEVERS, GRADE 1
1 EA THRESHOLD, J32130
1 SET WEATHERSEALS
1 SET SILENCERS

HW–2 1–1/2 PR HINGES
1 EA LOCKSET F02, PRIVACY LOCK W/LEVERS, GRADE 1
1 SET SILENCERS

DOOR TYPE NOTES:

1. EXTERIOR DOOR, INCLUDING GLAZING, SHALL MEET THE REQUIREMENTS OF UL752, LEVEL 5 RESISTANCE FOR PROTECTION AGAINST AK–47 FIRE.
2. DOORS AND FRAME COLORS SHALL MATCH ADJACENT WALL COLORS AS SELECTED BY THE CONTRACTING OFFICE.
3. HARDWARE SHALL BE HEAVY DUTY. COMMERCIAL GRADE, STAINLESS STEEL WITH A MATTE FINISH. THERE SHALL BE THREE HINGES AT EACH DOOR, AT LEAST 200/16/5MM, WITH BALL BERING , SECURED BY THREADED PINS.
4. FRAMES SHALL BE MOUNTED AND ADJUSTED IN ACCORDANCE WITH MANUFACTURER'S INSTRUCTIONS. FRAMES SHALL BE FASTENED WITH MINIMUM OF THREE FASTENING POINTS PER SIDE AT REGULAR INTERVALS.
5. ALL DOOR FRAMES SHALL BE FITTED WITH DOOR SILENCERS.
6. DIMENSIONS SHOWN ON DOOR SCHEDULE ARE BASED UPON MODULAR MASONRY (OR ROUGH OPENING), HEIGHT OF 2300MM FOR STANDARD PERSONAL DOORS. CONTRACTOR SHALL COORDINATE WITH DOOR SUPPLIER TO ENSURE THAT DIMENSIONS OF DOORS AND FRAMES PROVIDED ARE COMPATIBLE WITH DOOR OPENING DIMENSIONS.
7. ALL DOOR LOCKS SHALL MORTISED.
8. LOCK FUNCTION F04–OFFICE DOOR LOCK– LATCH BOLT OPERATED BY LEVER FROM EITHER SIDE EXCEPT WHEN OUTSIDE LEVER IS MADE INOPERATIVE BY A STOP OR MECHANICAL MEANS OTHER THAN A KEY. WHEN OUTSIDE LEVER IS LOCKED, LATCH BOLT MAY BE RETRACTED BY KEY FROM OUTSIDE OR BY ROTATING INSIDE LEVER.
9. LOCK FUNCTION F02– PRIVACY LOCK–LATCH BOLT OPERATED BY LEVER EITHER SIDE. DEADBOLT OPERATED BY TURN FROM INSIDE AND BY EMERGENCY KEY FROM OUTSIDE

NOTES:

1. FOR HARDWARE SET DESCRIPTION SEE SPECIFICATIONS SECTION 08710 PARAGRAPH 3.5.
2. CONTRACTOR TO USE LOCALLY FABRICATED DOORS AND WINDOWS.

D GENERAL NOTES
04–A–601

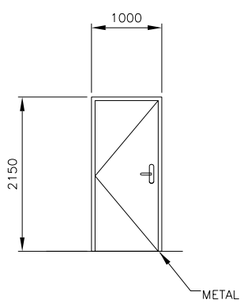

C DOOR (D–1)
04–A–601 N.T.S

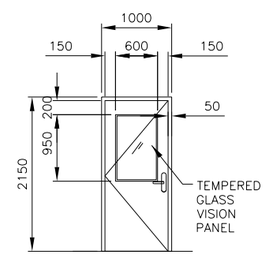

B DOOR (D–2)
04–A–601 N.T.S

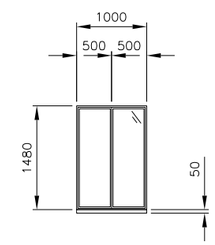

A WINDOW
04–A–601 N.T.S

REV	DATE	BY	SUB	APP	DESCRIPTION
0	06/30/10				SITE ADAPT CONSTRUCTION PLANS

DESIGNED N. SPAHIC
DRAWN T. NGUYEN
CHECKED C. JUNG
IN CHARGE J. ANDERSON
DATE D. WHEELER
30 JUNE 2010

AFGHAN NATIONAL SECURITY FORCE
COMPREHENSIVE PLAN FOR FACILITIES DEVELOPMENT

MINISTRY OF INTERIOR (MoI) – AFGHAN NATIONAL POLICE
PROVINCIAL FIRE STATION – TYPE–B

TRAINING TOWER DOOR & WINDOW SCHEDULE

SCALE AS SHOWN

PROJECT NO. 6151–08–0328

04–A–601

ROOM FINISH SCHEDULE

ROOM NO.	ROOM NAME	FLOOR MATERIAL	BASE MATERIAL	WALL MATERIAL	WALL FINISH	CEILING MATERIAL	CEILING FINISH	CEILING HEIGHT	DOOR & WINDOW FINISH MATERIAL	DOOR & WINDOW FINISH FINISH	REMARKS
100	ROOM 1	TT–1	MT–1	P	P–7	P	P–3	2570	MTD	P–4	
101	ROOM 2	TT–1	MT–1	P	P–7	P	P–3	2570	WD	P–5	
102	ROOM 3	CONC/S	–	P	P–7	P	P–3	2570	MTD	P–4	
103	ROOM 4	CONC/S	–	P	P–7	P	P–3	2570	MTD	P–4	

GENERAL FINISH NOTES/TYPICAL COLORS & MATERIAL SELECTION

FLOORING

CONC/S CONCRETE SEALED AND HARDENED WITH BROOM FINISH

TERRAZZO TILE (TT)
TT–1 AFGHAN LOCAL PRODUCT; 300mm X 300mm WITH SPECIAL POLISH

ENTRY MAT (MAT)
MAT–1 REESE PERFEC CLEAN ALUMINUM HINGE MAT; RECESSED FRAME WITH NO. 546 CARPET INSERTS, METAL FINISH: MIL ALUMINUM; CARPET INSERTS: MAUVE 8616 (NOT USED)

CERAMIC TILE (CT)
CT–1 R.A.K CERAMIC UAE; 300mm X 300mm UNPOLISHED PORCELAIN

CT–2 AFGHAN LOCAL PRODUCT; 300mm X 600mm POLISHED PORCELAIN

CT–3 AFGHAN LOCAL PRODUCT; 600mm X 1000mm UNPOLISHE PORCELAIN

CT–4 R.A.K CERAMIC UAE;#4/700RBEM–10 200mm X 200mm UNPOLISHE PORCELAIN

CT–5 R.A.K CERAMIC UAE;# 600CPAR–2 200mm X 300mm UNPOLISHE PORCELAIN

BASE TREATMENTS

MARBLE TILE (MT)
MT–1 AFGHAN LOCAL PRODUCT; 75mm X 100mm CROSS SHEEN PORCELAIN MARBLE TILE COVE BASE; #AXXX EMPRESS BLACK

WALL FINISHES

PAINT/EPOXY PAINT (P/EP):
P–1 BRIGHTO PAINTS; # 42 SAND STONE SUPER EMULSION

P–2 BRIGHTO PAINTS; # 127 CAMEO FOR EXTERNAL USE WEATHER SHIELD

P–3 BRIGHTO PAINTS; # X LATEX FOR WATER BASE WALL AND CEILING

P–4 BRIGHTO METALLIC ENAMEL; # 3 LIGHT GRAY SUITABLE FOR USE ON ALL TYPES OF INTERIOR AND EXTERIOR WOOD AND METAL SURFACES.

P–5 BRIGHTO METALLIC ENAMEL; # 42 ASH WHITE SUITABLE FOR USE ON ALL TYPES OF INTERIOR AND EXTERIOR WOOD AND METAL SURFACES.

P–6 BRIGHTO PAINTS; # 12 OFF WHITE

P–7 BRIGHTO PAINTS; #70 ROSE WHITE

P–8 BRIGHTO PAINTS; #69 LILY WHITE

P–9 BRIGHTO PAINTS; #40 PEACH CREAM

CERAMIC TILE (CT):
CT–4 R.A.K CERAMIC UAE;#4/700RBEM–10 200mm X 200mm UNPOLISHE PORCELAIN

CT–5 R.A.K CERAMIC UAE; # 600CPAR–2 200mm X 300mm UN–POLISHE

CEILING FINISHES

PAINTED CEILINGS (P)
P–1 BRIGHTO PAINT; # 12 OFF WHITE

MISCELLANEOUS SURFACES

TOILET PARTITIONS (TP)
NOT USED

SIGNAGE (S)
S–1 BACKGROUND COLOR: MATCH P–3, TEXT: WHITE

INTERIOR DOOR AND WINDOW FRAMES
P–4 BRIGHTO ; #3 LIGHT GRAY

INTERIOR WOOD DOORS AND TRIM
WHITE OAK, CLEAR FINISH, NO STAIN

MOVEABLE WALL (MW)
NOT USED

FINISH SCHEDULE ABBREVIATIONS

AFF	ABOVE FINISHED FLOOR	LAM	PLASTIC LAMINATE
ALSF	ALUMINUM STOREFRONT SYSTEM	MANUF	BY MANUFACTURER
ATC	ACOUSTIC TILE CEILING	MAT	ENTRY MAT
CB	CEMENT BOARD	MR	MOISTURE RESISTANT
CONC/S	CONCRETE SEALED AND HARDENED WITH BROOM FINISH	MTL	METAL PANEL
		MW	MOVABLE WALL
		NA	NOT APPLICABLE
		P	PAINT
CPT	CARPET	PREFIN	PREFINISHED
CT	CERAMIC TILE	RB	RESILIENT BASE
EP	EPOXY PAINT	RBP	RACQUETBALL PANEL
EXPOSED	EXPOSED STRUCTURE	VCT	VINYL COMPOSITION TILE
GN	GENERAL NOTE	MT	MARBLE TILE
GWB	GYPSUM WALL BOARD	MTD	METALLIC DOOR
HM	HOLLOW METAL	WD	WOOD DOOR
		TT	TERRAZZO TILE
		PVC	POLYVINYL

GENERAL NOTES

1. THE MANUFACTURER'S NAMES AND THEIR PRODUCTS REFERENCED ONLY INDICATE THE COLOR, TEXTURE, AND PATTERN REQUIRED FOR THE MATERIALS LISTED. THE PRODUCTS FURNISHED SHALL MEET THE COLOR, TEXTURE, AND PATTERN INDICATED AS WELL AS THE MATERIAL QUALITY AND PERFORMANCE SPECIFIED IN THE APPLICABLE TECHNICAL SPECIFICATIONS. THE USE OF MANUFACTURER'S NAMES AND PRODUCTS DO NOT PRECLUDE THE USE OF OTHER MANUFACTURER'S PRODUCTS OF APPROVED EQUAL COLOR, TEXTURE, AND/OR PATTERN IF ALL OTHER REQUIREMENTS ARE MET.
2. ALL VISIBLE GRILLES, DIFFUSERS, AND OTHER MECHANICAL RELATED FINISH OPENING DEVICES INCLUDING FIRE ALARMS SHALL BE PAINTED TO MATCH COLOR OF ADJACENT SURFACE.
3. REFER TO APPROPRIATE ARCHITECTURAL DRAWINGS AND DETAILS TO PROPERLY ASSESS THE FULL EXTENT OF WORK REQUIRED. SPECIFICALLY REFER TO THE REFLECTED CEILING PLANS AND BUILDING SECTIONS TO DETERMINE HEIGHTS OF REQUIRED WALL MATERIALS, SPECIAL CONDITIONS AND STRUCTURES, ETC.
4. REFER TO EXTERIOR ELEVATIONS FOR EXTERIOR FINISH SELECTIONS.
5. INFILL FLOOR AT SLAB RECESSES NOT TO RECEIVE CERAMIC TILE WITH CONCRETE LEVEL WITH ADJACENT FLOOR SURFACES PRIOR TO APPLYING FLOOR FINISH.
6. WALL AND CEILING GWB SURFACES SHALL BE PAINTED WITH FLAT FINISH, TRIM SHALL BE SEMI–GLOSS.
7. INSTALL PLASTIC BUMPER RAILS AND CORNER GUARDS AT MAIN CORRIDORS
8. INTERIOR SURFACE OF EXTERIOR METAL DOORS AND FRAMES SHOULD COMPLY WITH P–4

NOTE:
NOT ALL FINISHES APPLY TO ALL BUILDINGS.

REV	DATE	BY	SUB/APP	DESCRIPTION
0	06/30/10			SITE ADAPT CONSTRUCTION PLANS

DESIGNED N. SPARIC
DRAWN C. JUNG
CHECKED J. ANDERSON
IN CHARGE D. WHEELER
DATE 30 JUNE 2010

AFGHAN NATIONAL SECURITY FORCE
COMPREHENSIVE PLAN FOR FACILITIES DEVELOPMENT

MINISTRY OF INTERIOR (MoI) – AFGHAN NATIONAL POLICE
PROVINCIAL FIRE STATION – TYPE–B

TRAINING TOWER FINISH SCHEDULE

SCALE AS SHOWN

PROJECT NO. 6151–08–0328

04–A–602

GENERAL NOTES

1. A RELATIVE (DATUM) FINISH FLOOR ELEVATION EQUAL TO 0.00 m. IS USED AS REFERENCE ELEVATION FOR ALL STRUCTURAL DRAWINGS. COORDINATE WITH SITE SPECIFIC GRADING PLAN TO BE PROVIDED BY CONTRACTOR.
2. FOUNDATIONS ARE DESIGNED USING AN ALLOWABLE BEARING PRESSURE OF 0.75 KG/SQ. CM (1500 PSF), AND A SUBGRADE MODULUS OF 54,292 KN/CU. M (200 PCI) AND BOTTOM OF FOOTINGS ARE PLACED AS SHOWN ON DRAWINGS. GEOTECHNICAL INVESTIGATION SHALL CONFIRM BEARING CAPACITY TO BE NO LESS THAN 0.75 KG/SQ CM. IF GEOTECHNICAL INVESTIGATION SHOWS LESS THAN 0.75 KG/SQ CM THE CONTRACTOR SHALL REDESIGN FOOTINGS BASED ON THE GEOTECHNICAL INVESTIGATION. SEE SPECIFICATION 01015 PARAGRAPH, GEOTECHNICAL, FOUNDATION AND SURVEY.
3. CJ INDICATES CONTROL JOINT. SEE 2/CS_103
4. REFER TO STRUCTURAL DRAWING SERIES 00-S-XXX FOR ADDITIONAL NOTES AND STRUCTURAL DETAILS.

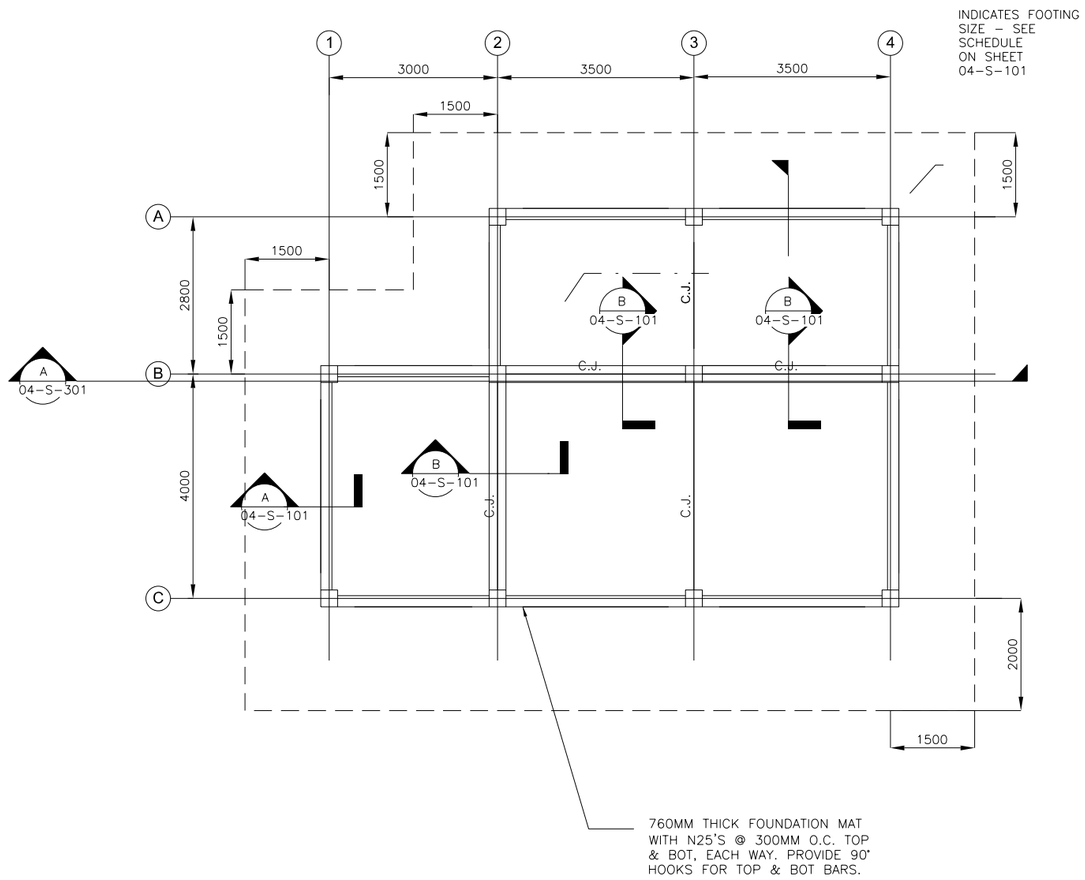

1 TRAINING TOWER FOUNDATION PLAN
04-S-101 SCALE: 1:50

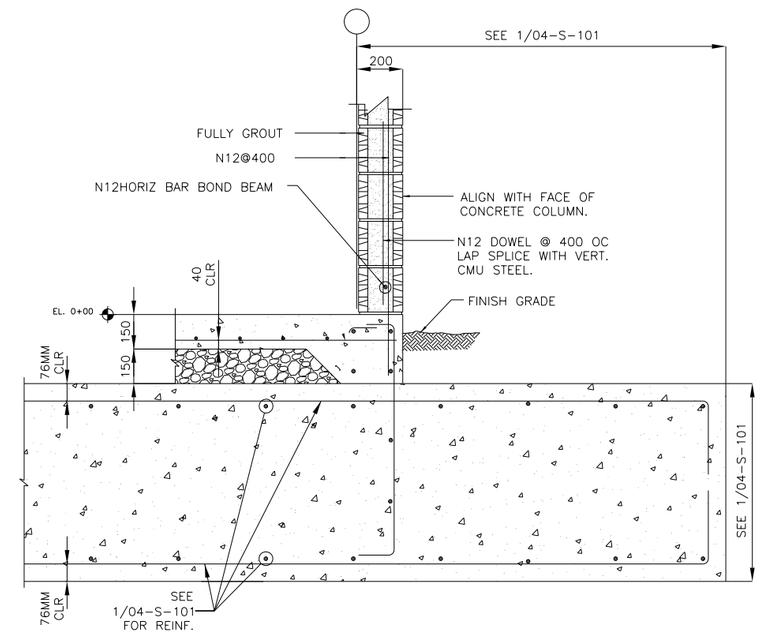

A SECTION
04-S-101 SCALE: NTS

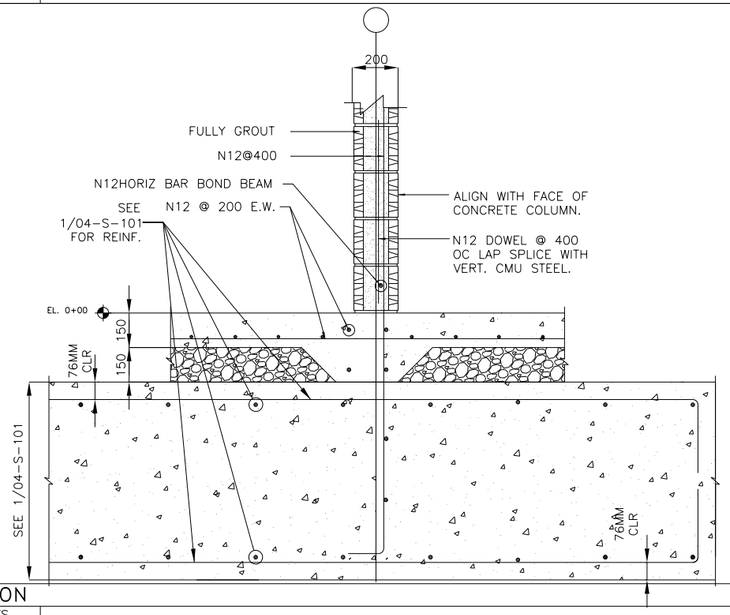

B SECTION
04-S-101 SCALE: NTS

REV	DATE	BY	SUB	APP	DESCRIPTION
0	06/30/10				SITE ADAPT CONSTRUCTION PLANS

DESIGNED Y. STEGMEIR
DRAWN M. LORENZ
CHECKED M. GARVER
IN CHARGE D. WHEELER
DATE 30 JUNE 2010

AFGHAN NATIONAL SECURITY FORCE COMPREHENSIVE PLAN FOR FACILITIES DEVELOPMENT

MINISTRY OF INTERIOR (MoI) – AFGHAN NATIONAL POLICE PROVINCIAL FIRE STATION – TYPE-B

TRAINING TOWER FOUNDATION PLAN

SCALE AS SHOWN

PROJECT NO. 6151-08-0328

04-S-101

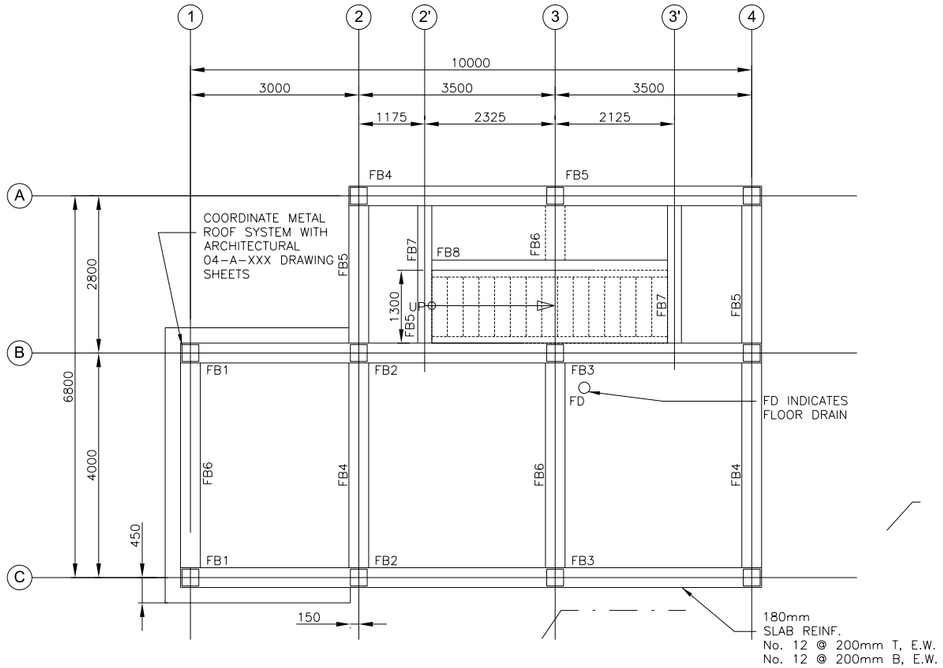

1 SECOND FLOOR SLAB PLAN
04-S-102 SCALE: 1:50

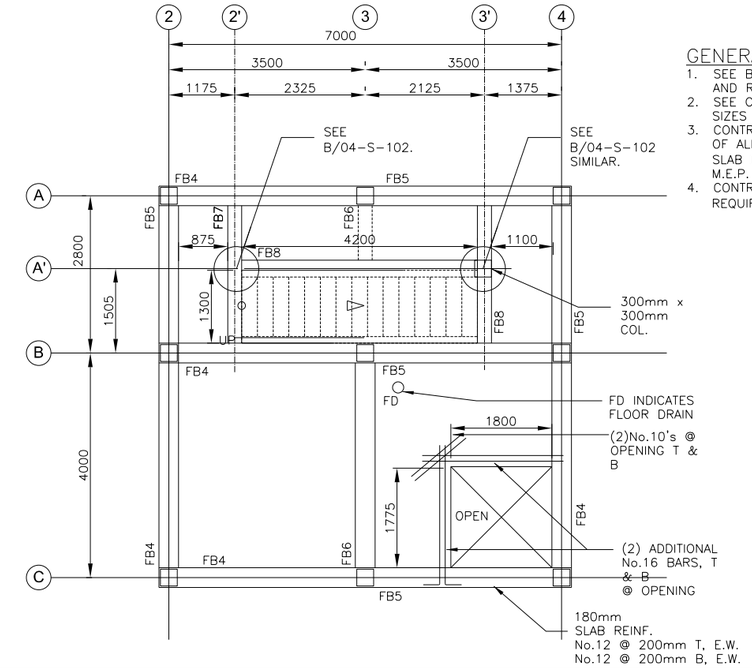

GENERAL NOTES

1. SEE BEAM DETAILS 04-S-502 FOR BEAM SIZES AND REINFORCING.
2. SEE COLUMN DETAILS 04-S-501 FOR COLUMN SIZES AND REINFORCING.
3. CONTRACTOR SHALL COORDINATE THE LOCATION OF ALL FLOOR DRAINS, SLAB PENETRATION, AND SLAB DEPRESSIONS W/ ARCHITECTURAL, AND M.E.P. REQUIREMENTS.
4. CONTRACTOR SHALL COORDINATE ALL HAND RAIL REQUIREMENTS W/ ARCHITECTURAL.

2 THIRD FLOOR SLAB PLAN
04-S-102 SCALE: 1:50

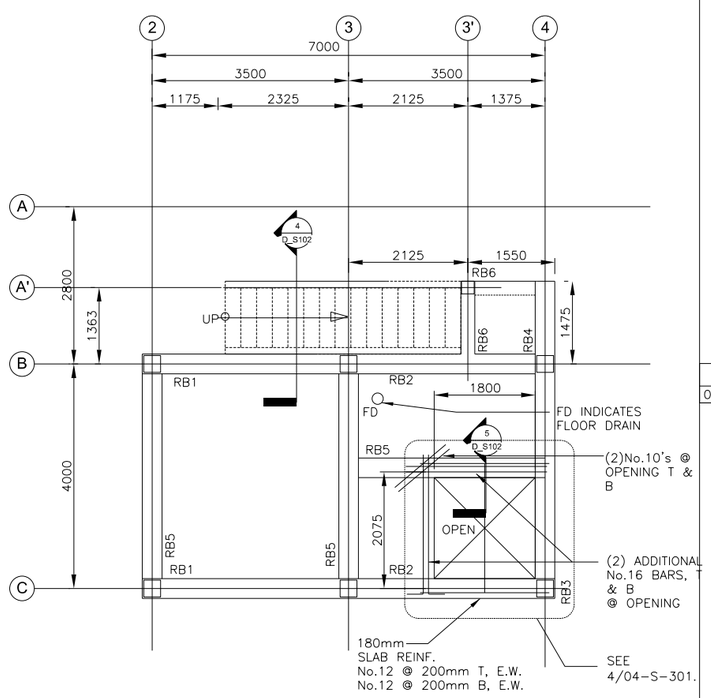

3 ROOF SLAB PLAN
04-S-102 SCALE: 1:50

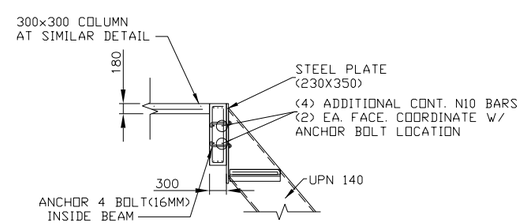

A STRINGER CONN. DETAIL
04-S-102 SCALE: 1:50 AT TOP OF STR.

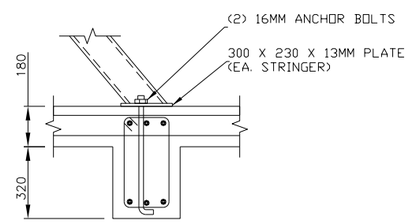

B STRINGER CONN. DETAIL
04-S-102 SCALE: 1:100 AT BOTTOM OF STR.

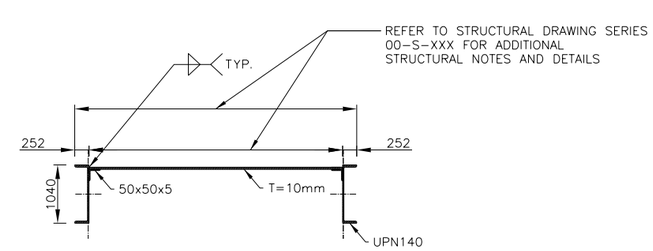

C STAIR SECTION
04-S-102 SCALE: 1:50

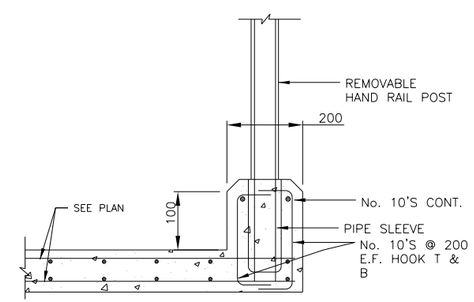

D SECTION
04-S-102 SCALE: 1:50

REV	DATE	BY	SUB	APP	DESCRIPTION
0	06/30/10				SITE ADAPT CONSTRUCTION PLANS

DESIGNED V. STEGMEIR
DRAWN M. LORENZ
CHECKED M. GARVER
IN CHARGE D. WHEELER
DATE 30 JUNE 2010

AFGHAN NATIONAL SECURITY FORCE COMPREHENSIVE PLAN FOR FACILITIES DEVELOPMENT

MINISTRY OF INTERIOR (MoI) – AFGHAN NATIONAL POLICE
PROVINCIAL FIRE STATION – TYPE-B

TRAINING TOWER FRAMING PLANS

SCALE AS SHOWN

PROJECT NO. 6151-08-0328

04-S-102

GENERAL NOTES:

1. SEE 04-S-502 "BEAM DETAILS" FOR CONCRETE BEAM REINFORCING.
2. SEE 04-S-501 "COLUMN DETAILS" FOR CONCRETE COLUMN REINFORCING.

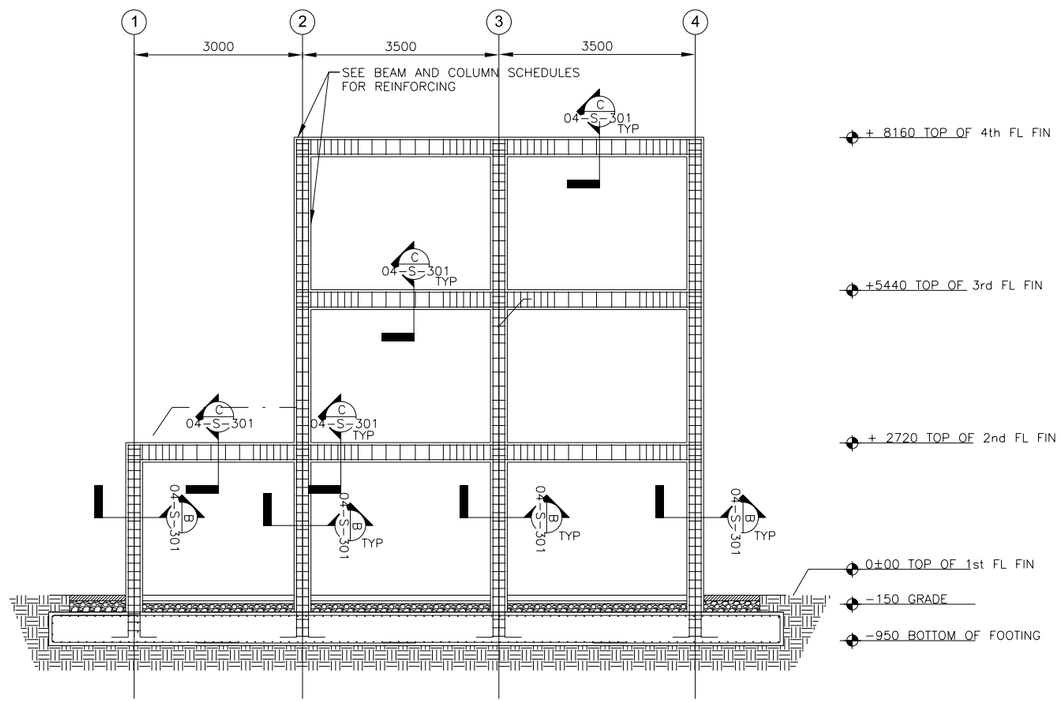

A CONCRETE FRAMING SECTION
04-S-301 SCALE: 1:50

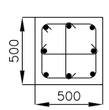

B SECTION-2
04-S-301 SCALE: N.T.S.

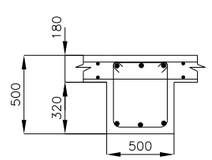

C SECTION-C
04-S-301 SCALE: N.T.S.

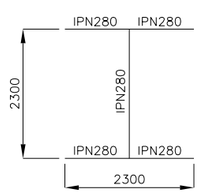

D RAPPELING SUPPORT PLAN
04-S-301 SCALE: N.T.S.

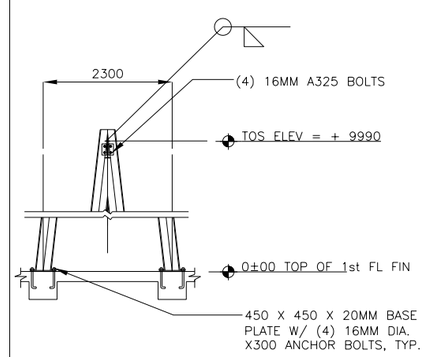

E SECTION
04-S-301 SCALE: N.T.S.

REV	DATE	BY	SUB	APP	DESCRIPTION
0	06/30/10				SITE ADAPT CONSTRUCTION PLANS

DESIGNED V. STEGMEIR
DRAWN M. LORENZ
CHECKED M. GARVER
IN CHARGE D. WHEELER
DATE 30 JUNE 2010

AFGHAN NATIONAL SECURITY FORCE COMPREHENSIVE PLAN FOR FACILITIES DEVELOPMENT

MINISTRY OF INTERIOR (MoI) - AFGHAN NATIONAL POLICE PROVINCIAL FIRE STATION - TYPE-B

TRAINING TOWER SECTION OF FRAME-B

SCALE AS SHOWN

PROJECT NO. 6151-08-0328

04-S-301

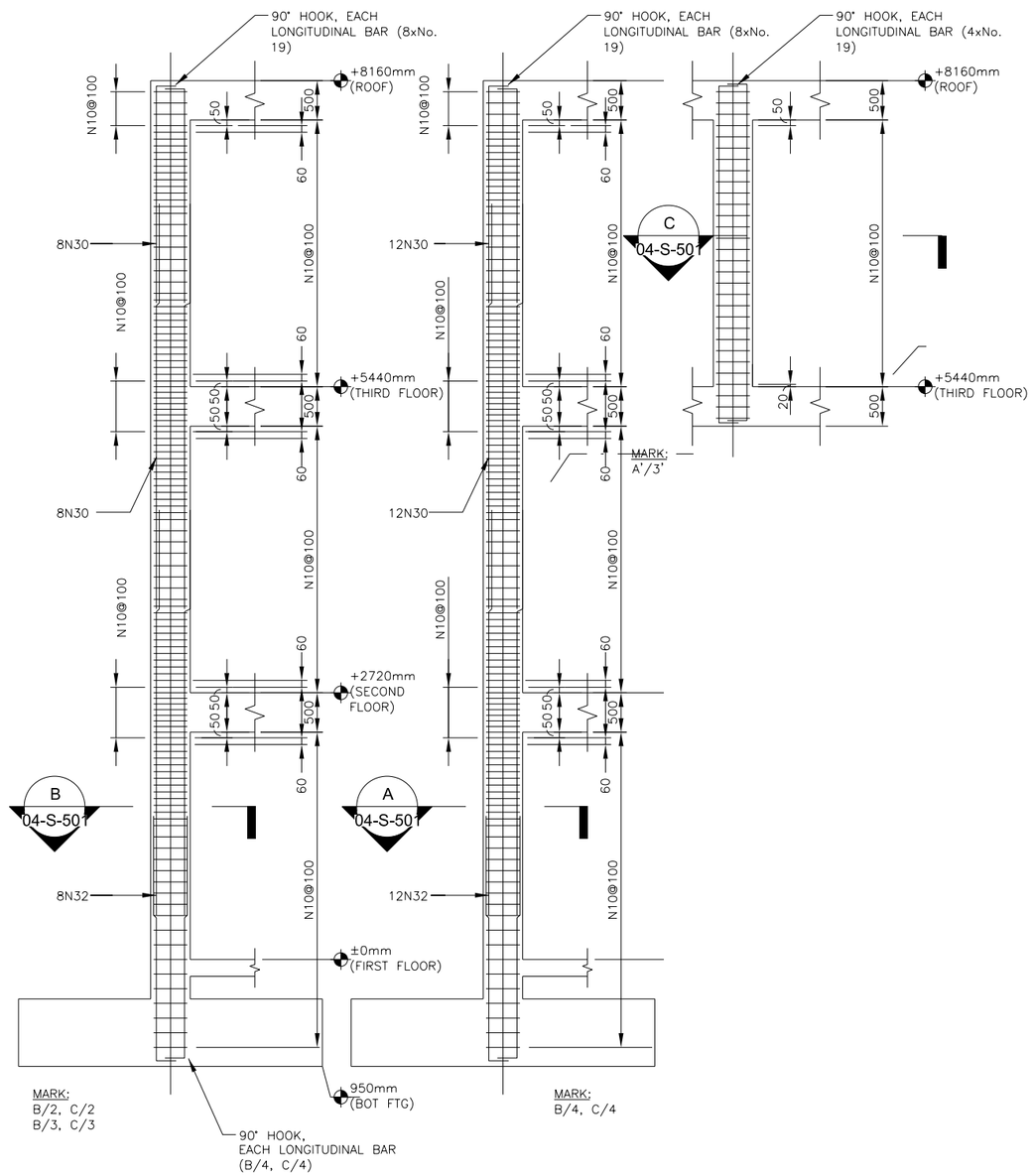

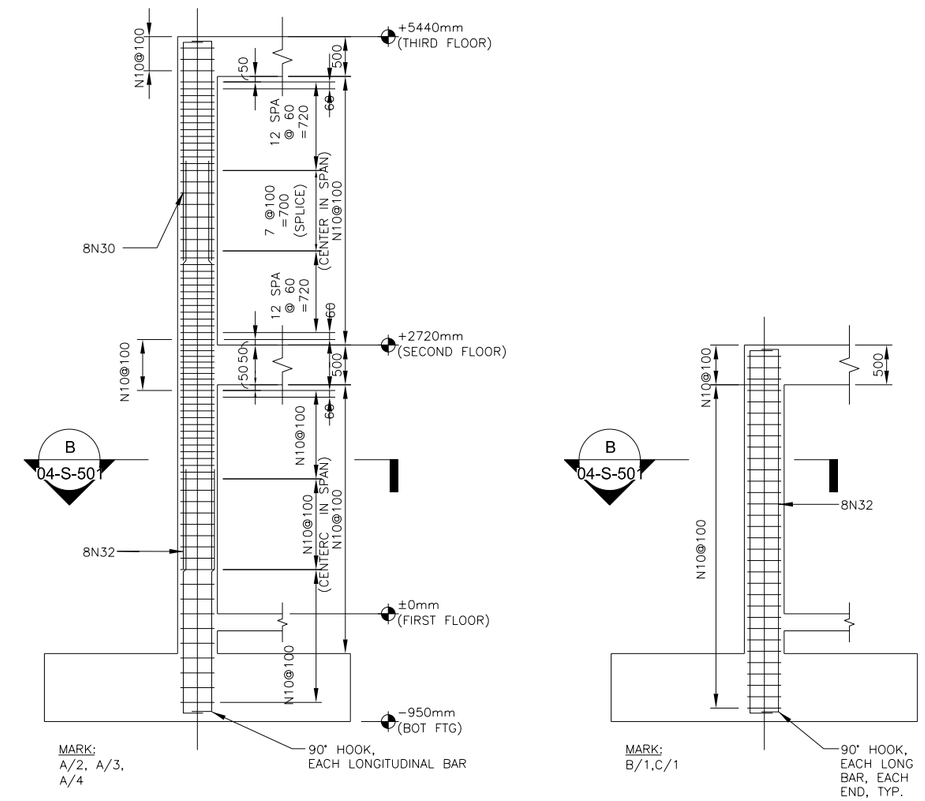

NOTES
1. SPLICES SHOWN ARE OPTIONAL
2. HOOPS AND TIES ARE No. 10 BAR THROUGHOUT
3. PROVIDE CONTINUOUS REINFORCEMENT AS SHOWN THROUGH JOINT
4. BEAM REINFORCEMENT OMITTED FOR CLARITY.

1 COLUMN REINFORCEMENT
04-S-501 SCALE:N.T.S.

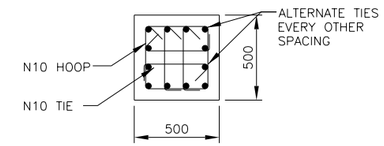

A COLUMN REINFORCEMENT DETAIL
04-S-501 SCALE:N.T.S.

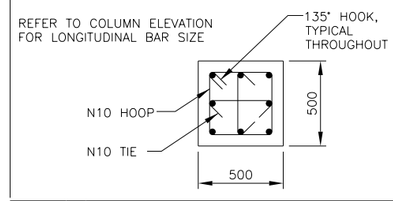

B COLUMN REINFORCEMENT DETAIL
04-S-501 SCALE:N.T.S.

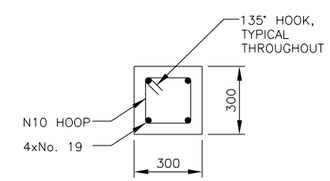

C COLUMN REINFORCEMENT DETAIL
04-S-501 SCALE:N.T.S.

N10 HOOP

REV	DATE	BY	SUB	APP	DESCRIPTION
0	06/30/10				SITE ADAPT CONSTRUCTION PLANS

DESIGNED W. STEGMEIR
DRAWN M. LORENZ
CHECKED M. GARVER
IN CHARGE D. WHEELER
DATE 30 JUNE 2010

AFGHAN NATIONAL SECURITY FORCE COMPREHENSIVE PLAN FOR FACILITIES DEVELOPMENT

MINISTRY OF INTERIOR (MoI) – AFGHAN NATIONAL POLICE PROVINCIAL FIRE STATION – TYPE-B

TRAINING TOWER COLUMN DETAILS

SCALE AS SHOWN

PROJECT NO. 6151-08-0328

04-S-501

CONCRETE BEAM SCHEDULE

BEAM MARK	BEAM SIZE		REINFORCING			STIRRUPS			REMARKS
	WIDTH (MM)	DEPTH (MM)	BOTTOM BARS	TOP LEFT BARS	TOP RIGHT BARS	SIZE	TYPE	SPACING EACH END (MM)	
RB1	500	500	3-N18L	3-N18L	3-N18L	N12	A	1@50;5@100;	
								R@200	
RB2	500	500	3-N18L	3-N18L	-	N12	A	1@50;5@100;	
								R@200	
RB3	500	500	3-N18L	3-N18L	3-N18L	N12	A	1@50;5@100;	
								R@200	
RB4	500	500	3-N18L	3-N18L	3-N18L	N12	A	1@50;5@100;	
								R@200	
RB5	500	500	3-N18L	3-N18L	3-N18L	N12	A	1@50;5@100;	
								R@200	
RB6	300	500	3-N16L	3-N16L	3-N16L	N12	A	1@50;5@100;	
								R@200	

ROOF BEAM SCHEDULE

BEAM MARK	BEAM SIZE		REINFORCING			STIRRUPS			REMARKS
	WIDTH (MM)	DEPTH (MM)	BOTTOM BARS	TOP LEFT BARS	TOP RIGHT BARS	SIZE	TYPE	SPACING EACH END (MM)	
FB1	500	500	3-N18L	3-N18L	3-N18L	N12	A	1@50;5@100;	
								R@200	
FB2	500	500	3-N18L	3-N18L	-	N12	A	1@50;5@100;	
								R@200	
FB3	500	500	3-N18L	3-N18L	3-N18L	N12	A	1@50;5@100;	
								R@200	
FB4	500	500	3-N18L	3-N18L	3-N18L	N12	A	1@50;5@100;	
								R@200	
FB5	500	500	3-N18L	3-N18L	3-N18L	N12	A	1@50;5@100;	
								R@200	
FB6	300	500	3-N16L	3-N16L	3-N16L	N12	A	1@50;5@100;	
								R@200	
FB7	300	500	3-N18L	3-N18L	3-N18L	N12	A	1@50;5@100;	
								R@200	
FB8	300	500	3-N16L	3-N16L	3-N16L	N12	A	1@50;5@100;	
								R@200	

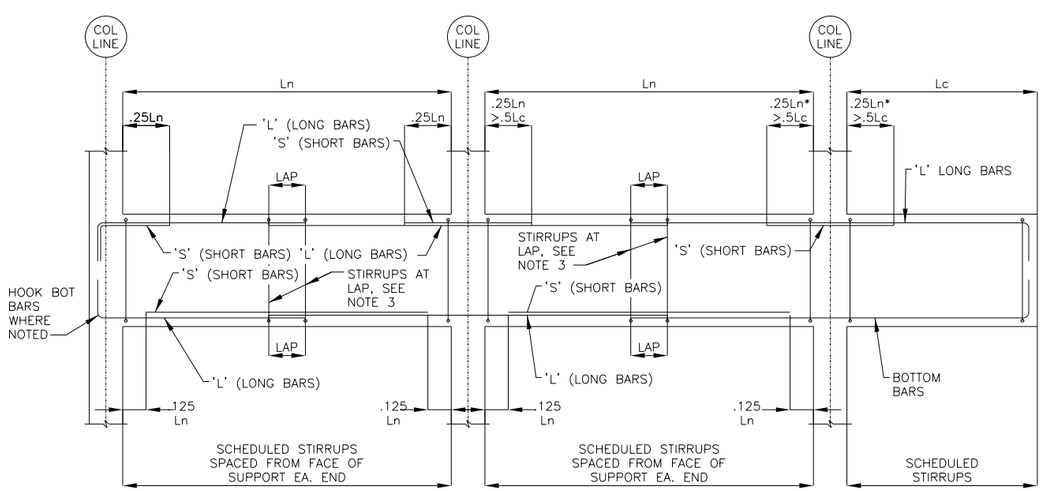

NOTES:
1. Ln* INDICATES GREATER OF TWO ADJACENT SPANS
2. FOR BAR LAPS SEE 3/00-S-501
3. MAX SPACING OF STIRRUPS @ LAP SHALL BE 10MM O.C.

1 TYPICAL CONCRETE BEAM DIAGRAM

04-S-601 SCALE: NTS

N10 HOOP

REV	DATE	BY	SUB	APP	DESCRIPTION
0	06/30/10				SITE ADAPT CONSTRUCTION PLANS

DESIGNED Y. STEGMEIR
DRAWN M. LORENZ
CHECKED M. GARVER
IN CHARGE D. WHEELER
DATE 30 JUNE 2010

AFGHAN NATIONAL SECURITY FORCE COMPREHENSIVE PLAN FOR FACILITIES DEVELOPMENT

MINISTRY OF INTERIOR (MoI) - AFGHAN NATIONAL POLICE PROVINCIAL FIRE STATION - TYPE-B

TRAINING TOWER CONCRETE BEAM SCHEDULE

SCALE AS SHOWN

PROJECT NO. 6151-08-0328

04-S-601

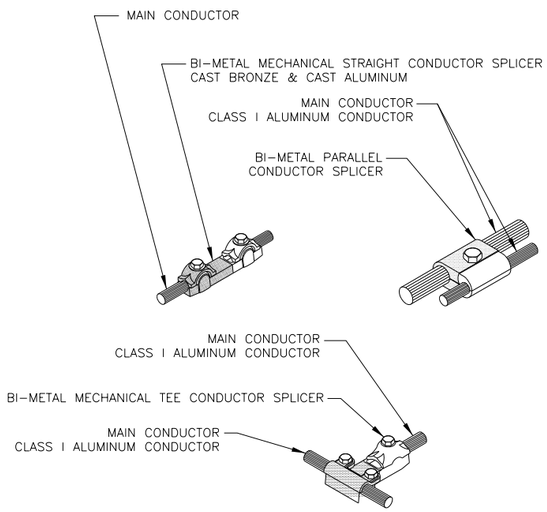

A BI-METAL CLAMPS AND SPLICERS

04-E-101 NOT TO SCALE

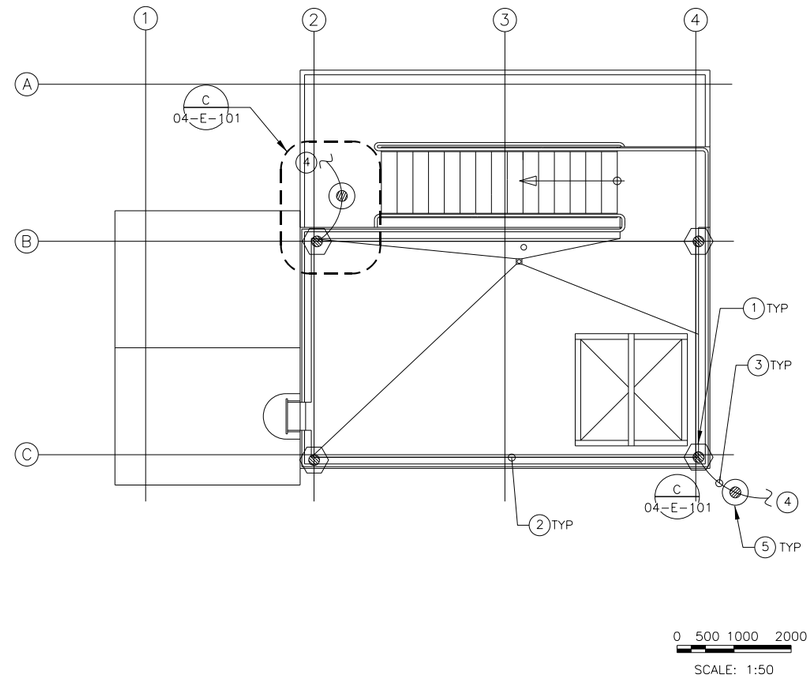

1 TRAINING TOWER ROOF PLAN LIGHTNING PROTECTION SYSTEM

04-E-101 SCALE 1:50

GENERAL NOTES;

1. SEE SHEET 00-E-001 FOR LEGEND, ABBREVIATIONS AND GENERAL NOTES.
2. CLASS I COMPONENTS SHALL APPLY FOR THE TRAINING TOWER BUILDING, HEIGHT IS NOT MORE THAN 23M (75 FEET).
3. ALL LIGHTNING PROTECTION CONDUCTORS SHALL BE FASTENED NOT MORE THAN 914.4MM (3 FEET) MAXIMUM SPACING.
4. CONDUCTORS SHALL INTERCONNECT ALL AIR TERMINALS AND SHALL FORM A TWO-WAY PATH FROM EACH AIR TERMINAL HORIZONTALLY OR DOWNWARD TO CONNECTORS WITH GROUND RODS.
5. THE INSTALLATION OF THE LIGHTNING PROTECTION SYSTEM SHALL MEET THE REQUIREMENTS OF NATIONAL FIRE PROTECTION ASSOCIATION 780 AND UNDER WRITERS LAB UL96/96A.
6. AIR TERMINALS SHALL NOT BE LESS THAN 610 MM (24 INCHES) LONG ABOVE THE OBJECT TO BE PROTECTED WHEN THE INTERVAL BETWEEN AIR TERMINALS IS NOT MORE THAN 7.6 METERS (25 FEET).
7. AIR TERMINALS SHALL BE PLACED ON ALL CHIMNEYS, VENTS, AND ROOF TOP METAL BODIES WHEN SUCH CHIMNEYS, VENTS OR ROOF TOP METAL BODIES ARE NOT WITHIN A ZONE OF PROTECTION.
8. AT LEAST TWO DOWN CONDUCTORS SHALL BE INSTALLED.
9. RADIUS OF BEND SHALL NOT BE LESS THAN 203 MM (8 INCHES).
10. PROVIDE #70MM² (#2/0 AWG) COPPER GROUNDING CONDUCTORS FOR THE LIGHTNING PROTECTION GROUNDING. ALL EXTERIOR GROUNDING CONDUCTORS SHALL BE BURIED A MINIMUM OF 762MM (30") BELOW GRADE OR 152.4MM (6") BELOW FROST LINE, WHICHEVER IS GREATER.

KEY NOTES;

1A AIR TERMINAL SHALL BE 12.7MM X 609.6MM (1/2" X 24") ALUMINUM, 90 DEGREES VERTICAL. MOUNT AND SUPPORT AIR TERMINALS ON 41MM (1.5") DIAMETER POLE SCHEDULE 40, MAINTAIN MINIMUM CLEAR HEIGHT OF POLE 3048MM ABOVE ROOF. SEE STRUCTURE DRAWINGS FOR LOCATION OF POLES AND DETAILS. SEE DETAIL B/D4-E-101.

2 MAIN CONDUCTORS SHALL BE (28 STRAND, 14 GAUGE CLASS 1
3 ALUMINUM ROOF CABLE, 58.9 KG/304.8M (130 POUNDS/1000 FEET), 15.875 MM DIAMETER, 70 MM² (#1/0)).

ALUMINUM DOWN CONDUCTORS SHALL BE CONNECTED TO COPPER DOWN CONDUCTOR AT LEAST 457MM (18 INCHES) ABOVE GRADE LEVEL.
4 BIMETALLIC CONNECTORS WILL BE USED. SEE DETAILS ON THIS SHEET FOR BI-METALLIC CONNECTIONS.

5 SEE SHEET 00-E-102 FOR CONTINUATION TO SITE GROUNDING PLAN.

PROVIDE AND INSTALL 19MMX3048MM (3/4" X 10'-0") COPPER CLAD STEEL GROUND RODS. IF ROCK IS ENCOUNTERED, GROUND ROD MAY BE INSTALLED WITH A MAXIMUM VARIATION OF 30 DEGREES FROM VERTICAL.

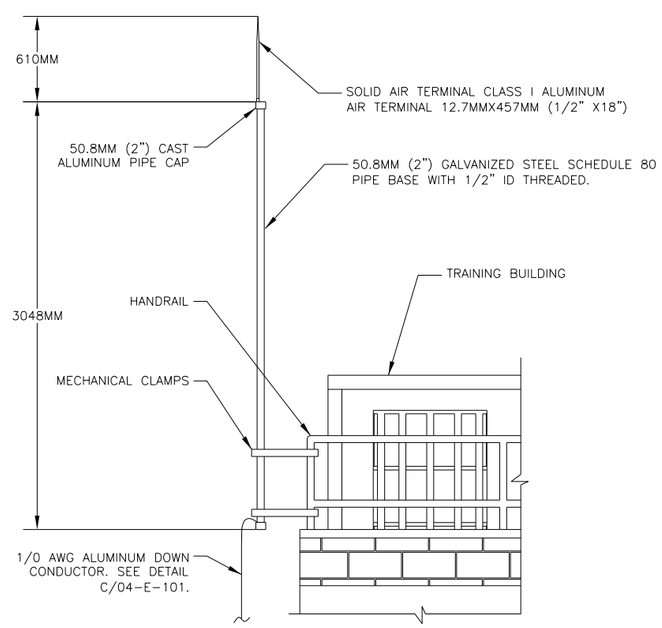

B AIR TERMINAL MOUNTING DETAIL

04-E-101 NOT TO SCALE

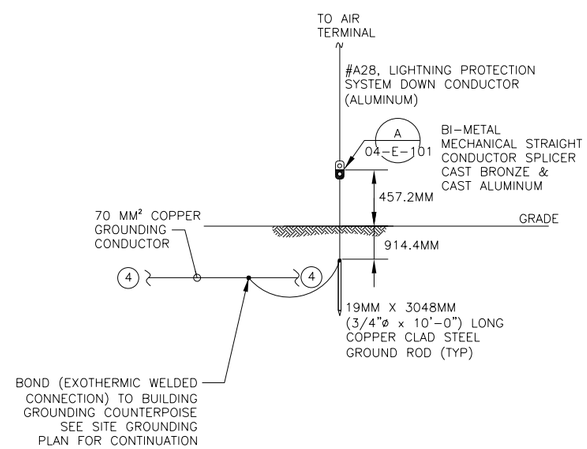

C BONDING LIGHTNING PROTECTION TO GROUNDING

04-E-101 NOT TO SCALE

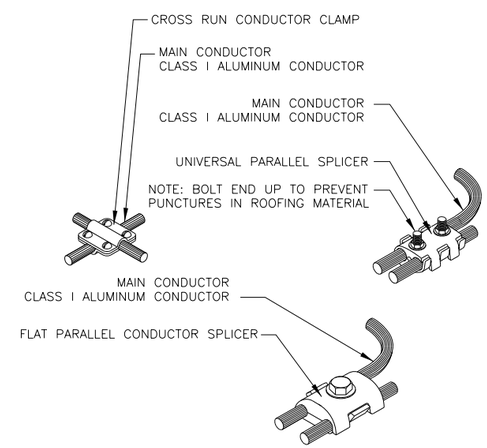

D CABLE CLAMPS AND SPLICERS

04-E-101 NOT TO SCALE

REV	DATE	BY	SUB	APP	DESCRIPTION
0	06/30/10				SITE ADAPT CONSTRUCTION PLANS

DESIGNED M. ESTAFANOUS
DRAWN L. KRAVCHUK
CHECKED B. CRAWFORD
IN CHARGE D. WHEELER
DATE 30 JUNE 2010

AFGHAN NATIONAL SECURITY FORCE
COMPREHENSIVE PLAN FOR
FACILITIES DEVELOPMENT

MINISTRY OF INTERIOR (MoI) – AFGHAN NATIONAL POLICE
PROVINCIAL FIRE STATION – TYPE-B

TRAINING TOWER ELECTRICAL PLAN

SCALE
AS SHOWN

PROJECT NO.
6151-08-0328

04-E-101

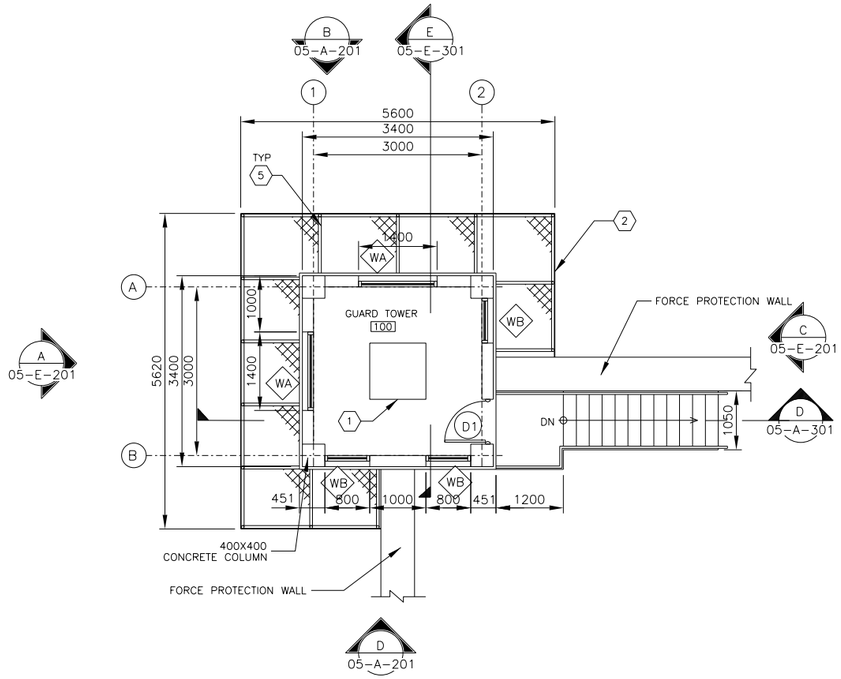

4 FLOOR PLAN

05-A-101 1:50

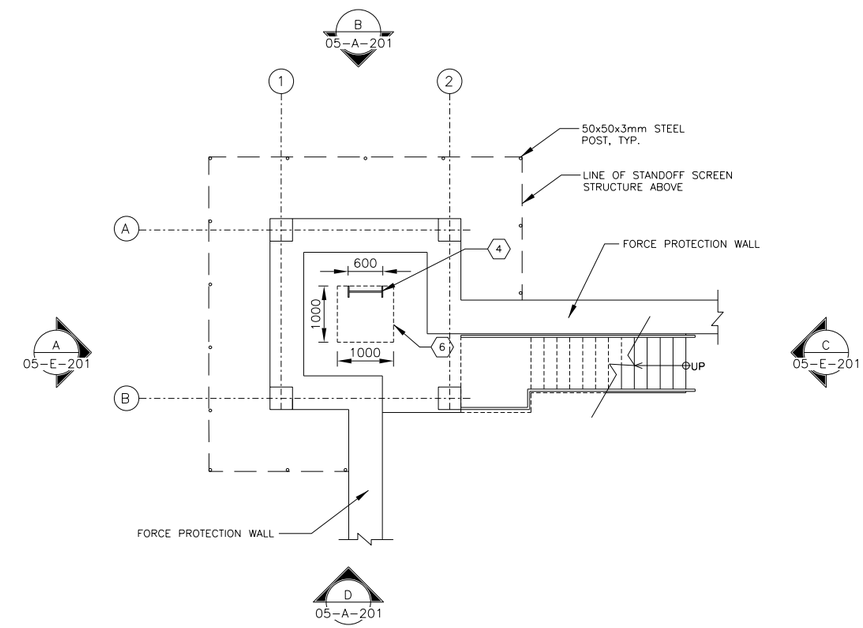

3 LOWER FLOOR PLAN

05-A-101 1:50

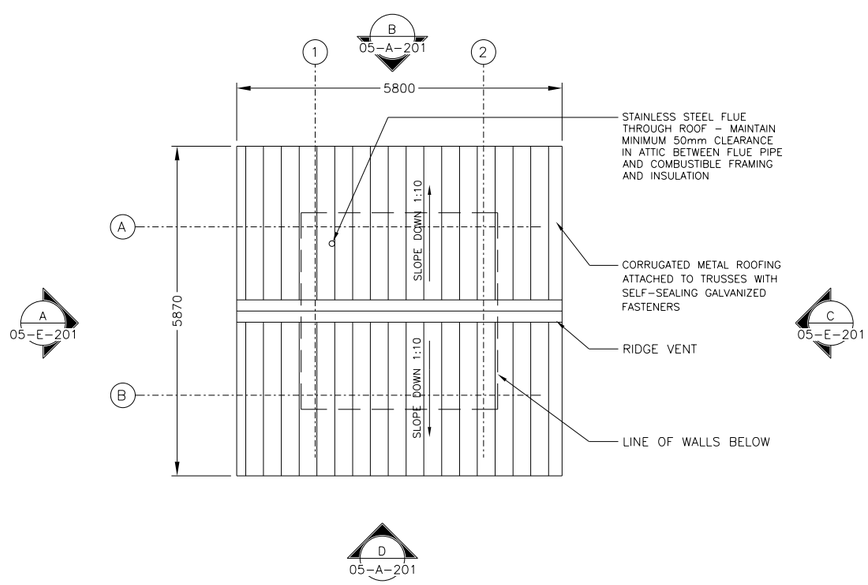

2 ROOF PLAN

05-A-101 1:50

FLOOR PLAN NOTES:

1. ALL INTERIOR PARTITIONS SHALL BE TYPE 1 UNLESS NOTED OTHERWISE
2. OPENINGS FOR DOORS SHALL BE LOCATED 200 MM FROM THE ADJACENT WALL UNLESS NOTED OTHERWISE
3. SURFACES TO BE PAINTED SHALL BE CLEAN AND FREE OF FOREIGN MATTER BEFORE APPLICATION OF PAINT. CLEANING SHALL BE SCHEDULED SO THAT DUST AND OTHER CONTAMINANTS WILL NOT FALL ON WET, NEWLY PAINTED SURFACES.
4. CONCRETE AND INTERIOR MASONRY SURFACES GROUTED SOLID SHALL BE ALLOWED TO DRY AT LEAST 30 DAYS BEFORE PAINTING EXCEPT CONCRETE SLAB ON GRADE WHICH SHALL BE ALLOWED TO CURE 90 DAYS BEFORE PAINTING.
5. PAINTS CONTAINING LEAD IN EXCESS OF 0.06 PERCENT BY WEIGHT OF THE TOTAL NONVOLATILE CONTENT SHALL NOT BE USED.
6. MERCURIAL FUNGICIDES SHALL NOT BE USED IN OIL-BASE PAINT.
7. REMOVE LOOSE DIRT AND CLEAN SURFACES BEFORE PAINTING. APPLY PAINT TO INTERIOR STRUCTURAL RIGID FRAMING AND CEILINGS AND TEST FOR ADHESION. PRIMER COAT FOR MASONRY. INITIAL FIRST COAT WITH AN ACRYLIC LATEX PAINT FOR EXTERIOR SURFACES AND A SECOND COAT WITH A WATER REPELLENT ACRYLIC LATEX PAINT.
8. INTERIOR METAL DOORS AND FRAMES SHALL RECEIVE A PRIMER COAT PLUS TWO COATS OF PAINT.

KEY NOTES: (X)

1. FLOOR HATCH
2. RPG STANDOFF SCREEN
3. EXTERIOR STAIR
4. LADDER
5. RETURN FENCE HORIZONTALLY TO FACE OF WALL
6. FLOOR HATCH ABOVE

1M 0 5M
SCALE 1:50

1 GENERAL NOTES

05-A-101

REV	DATE	BY	SUB/APP	DESCRIPTION
0	06/30/10			SITE ADAPT CONSTRUCTION PLANS

DESIGNED N. SPAHIC
DRAWN C. JUNG
CHECKED J. ANDERSON
IN CHARGE D. WHEELER
DATE 30 JUNE 2010

AFGHAN NATIONAL SECURITY FORCE
COMPREHENSIVE PLAN FOR FACILITIES DEVELOPMENT

MINISTRY OF INTERIOR (MoI) – AFGHAN NATIONAL POLICE
PROVINCIAL FIRE STATION – TYPE-B

GUARD TOWER FLOOR PLAN & ROOF PLAN

SCALE AS SHOWN

PROJECT NO. 6151-08-0328

05-A-101

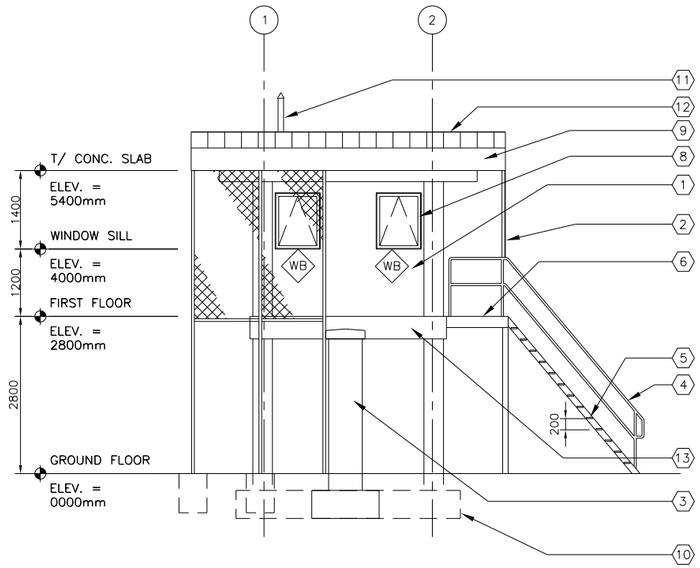

D | ELEVATION 1
05-A-201 | 1:50

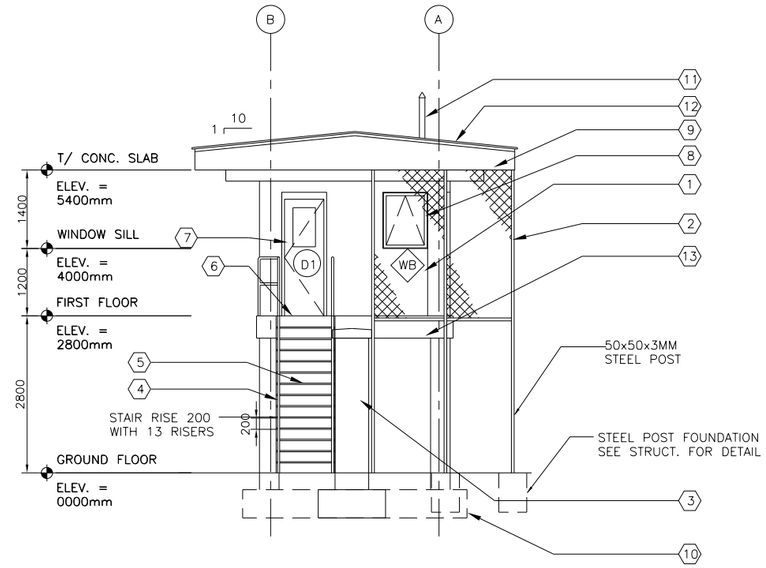

C | ELEVATION 2
05-A-201 | 1:50

KEY NOTES: (X)

1. STUCCO ON CMU.
2. RPG STANDOFF SCREEN.
3. FORCE PROTECTION WALL.
4. STEEL PIPE RAILING, PAINTED.
5. STEEL STAIR TREADS, PAINTED.
6. STEEL PLATFORM, PAINTED.
7. STEEL FRAME AND DOOR WITH PLEXI-GLASS LITE, PAINTED.
8. ALUM. AWNING WINDOW.
9. ALUMINUM FASCIA.
10. CONCRETE FOOTING, SEE STRUCTURAL DRAWINGS.
11. STAINLESS STEEL FLUE.
12. METAL ROOF.
13. STUCCO ON CONCRETE, PAINTED.

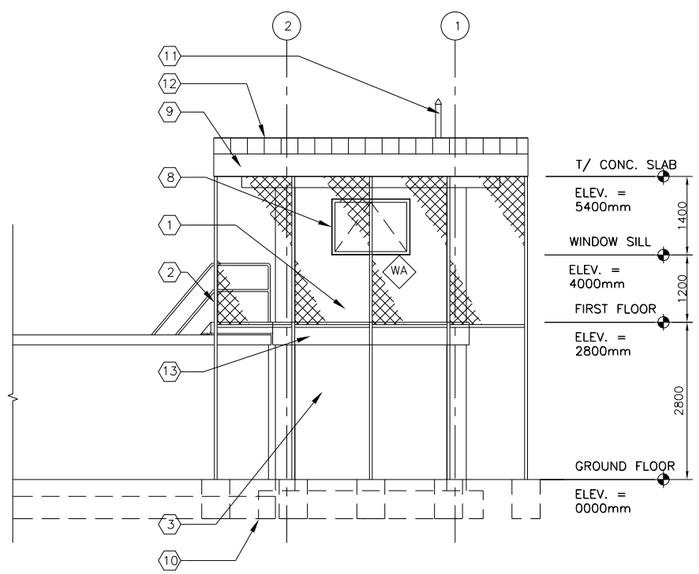

B | ELEVATION 3
05-A-201 | 1:50

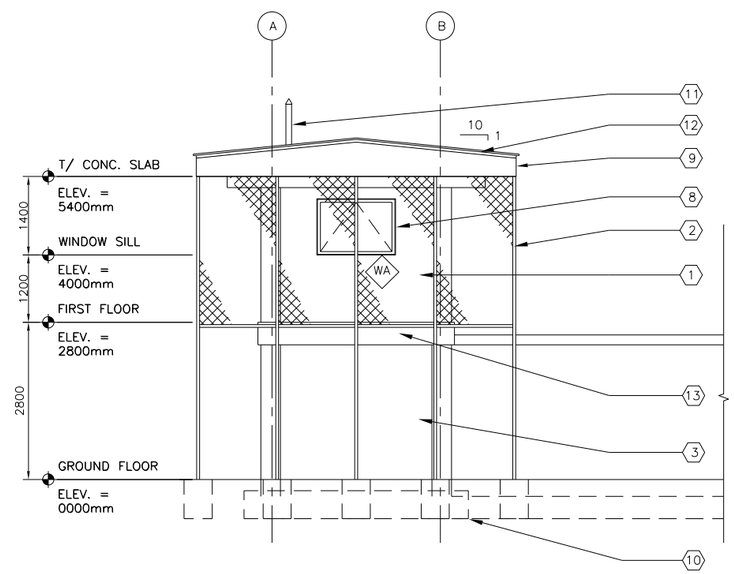

A | ELEVATION 4
05-A-201 | 1:50

REV	DATE	BY	SUB/APP	DESCRIPTION
0	06/30/10			SITE ADAPT CONSTRUCTION PLANS

DESIGNED: N. SPAHIC
DRAWN: C. JUNG
CHECKED: J. ANDERSON
IN CHARGE: D. WHEELER
DATE: 30 JUNE 2010

AFGHAN NATIONAL SECURITY FORCE
COMPREHENSIVE PLAN FOR FACILITIES DEVELOPMENT

MINISTRY OF INTERIOR (MoI) – AFGHAN NATIONAL POLICE
PROVINCIAL FIRE STATION – TYPE-B

GUARD TOWER ELEVATIONS

SCALE: AS SHOWN

PROJECT NO. 6151-08-0328

05-A-201

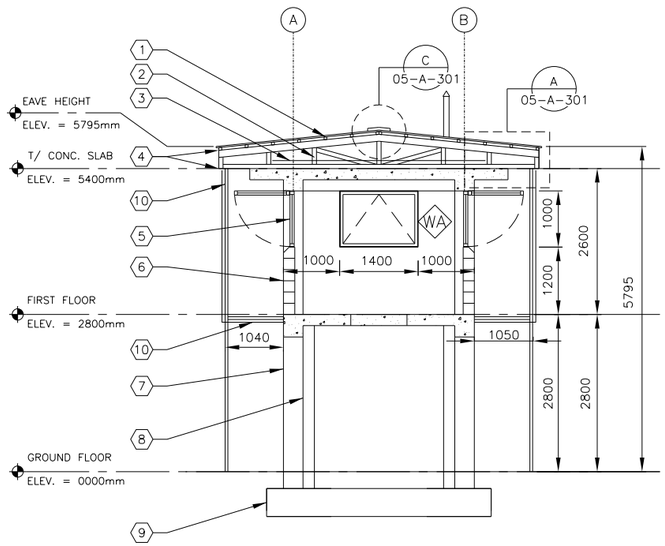

E SECTION – 1

05-A-301 1:50

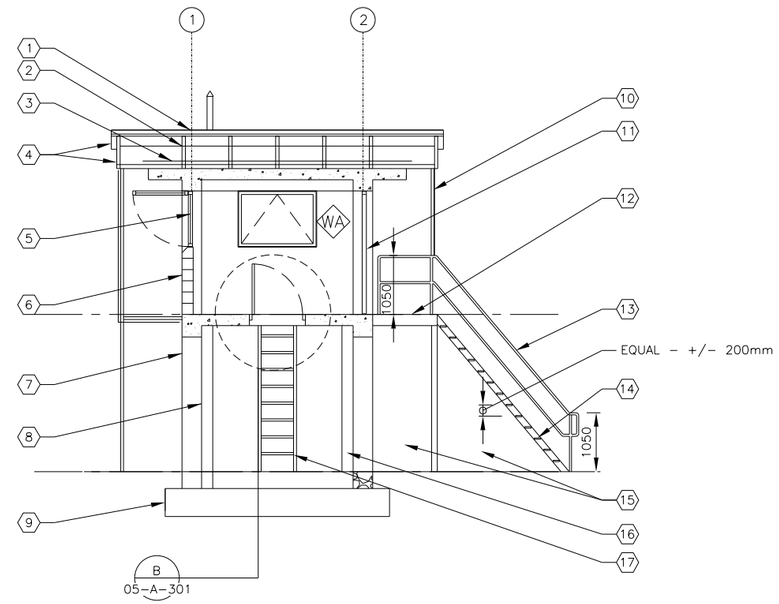

D SECTION – 2

05-A-301 1:50

KEY NOTES: (X)

1. PURLINS AT 700mm O.C. MAX.
2. COLD FORMED METAL TRUSSES AT 1000mm O.C. MAX.
3. 200mm FIBERGLASS BLANKET INSULATION
4. PR–FINISHED ALUMINUM FASCIA AND SOFFIT
5. ALUMINUM AWNING WINDOWS W/ CONTINUOUS STOP AND WEATHERSTRIPPING, AND GLAZED W/ MIN. 6mm PLEXI–GLASS
6. 200mm REINFORCED CMU WALL W/ PAINTED STUCCO COATING – SEE STRUCTURAL
7. STONE WALL INFILLED BETWEEN REINFORCED CONCRETE TOWER COLUMNS W/ ALIGNED OUTSIDE FACES – SEE STRUCT FOR STONE WALL DETAILS
8. LINE OF REINFORCED CONCRETE GUARD TOWER COLUMNS BEYOND
9. REINFORCED CONCRETE COLUMN FOOTINGS – SEE STRUCTURAL
10. GALVANIZED CHAIN LINK FENCING ATTACHED TO MIN. 50mm DIAM. GALVANIZED PIPES ANCHORED IN CONCRETE BELOW GRADE AND TO CLIP ANGLES AT SOFFIT ABOVE
11. PAINTED GALVANIZED STEEL DOOR AND FRAME
12. STEEL DIAMOND PLATE PLATFORM WELDED TO PAINTED STEEL CHANNEL FRAMING SUPPORTED BY STEEL TUBES – SLOPE PLATFORM MIN. 1% TO FRONT FACE FOR WATER SHEDDING
13. PAINTED GALVANIZED 38mm DIAM. STEEL PIPE RAILING WELDED TO STEEL STRINGERS OR SET IN CONCRETE
14. 230mm DEEP STEEL DIAMOND PLATE TREADS, OR APPROVED EQUAL, WELDED TO C250X23 STRINGERS W/ CLIP ANGLES – SLOPE 1%%% TO FRONT FACE FOR WATER SHEDDING. ANCHOR STRINGER TO CONCRETE WITH L127X127X9.5 WITH 16MM DIA. ANCHOR BOLTS 150MM EMBED
15. FORCE PROTECTION WALL BEYOND
16. INSIDE CORNER OF STONE WALL BEYOND
17. STEEL LADDER; REFER TO 4/S–A13

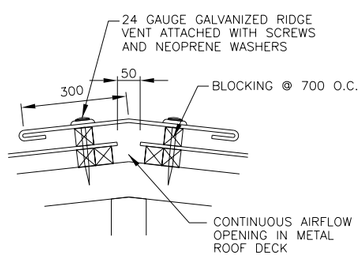

C TYPICAL RIDGE DETAIL

05-A-301 SCALE 1:50

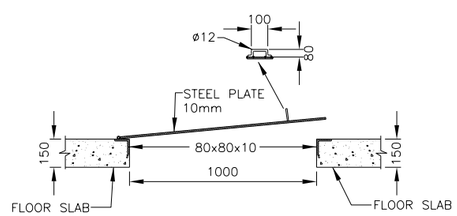

B TYPICAL TRIP DOOR

05-A-301 1:15

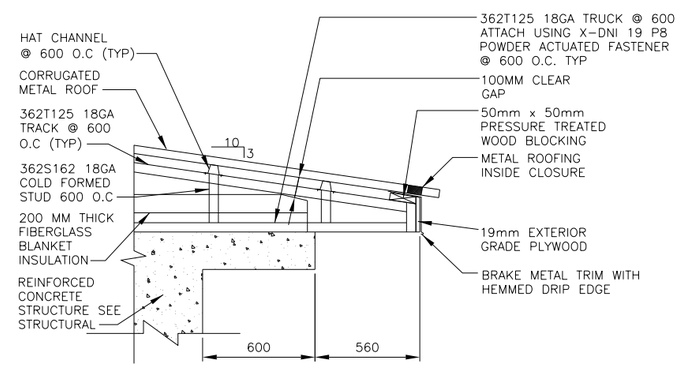

A TYPICAL EAVE DETAIL

05-A-301 N.T.S.

REV	DATE	BY	SUB	APP	DESCRIPTION
0	06/30/10				SITE ADAPT CONSTRUCTION PLANS

DESIGNED N. SPANIC
DRAWN C. JUNG
CHECKED J. ANDERSON
IN CHARGE D. WHEELER
DATE 30 JUNE 2010

AFGHAN NATIONAL SECURITY FORCE
COMPREHENSIVE PLAN FOR FACILITIES DEVELOPMENT

MINISTRY OF INTERIOR (MoI) – AFGHAN NATIONAL POLICE
PROVINCIAL FIRE STATION – TYPE–B

GUARD TOWER SECTIONS

SCALE AS SHOWN

PROJECT NO. 6151–08–0328

05–A–301

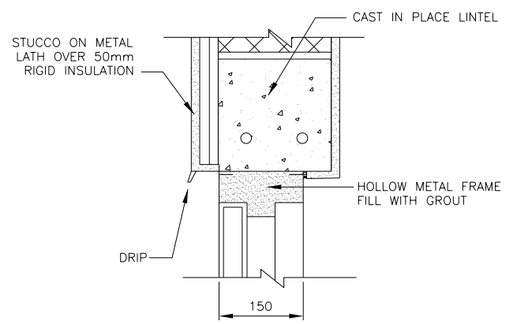

F EXTERIOR DOOR HEADER DETAIL

05-A-501 SCALE: N.T.S.

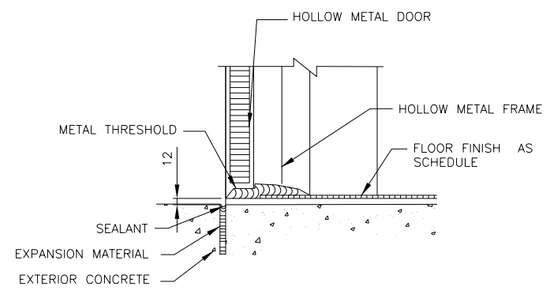

E EXTERIOR DOOR THRESHOLD

05-A-501 SCALE: N.T.S.

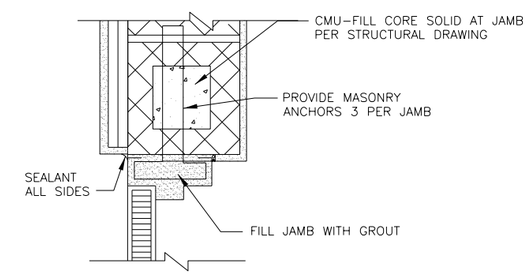

D EXTERIOR DOOR JAMB

05-A-501 SCALE: N.T.S.

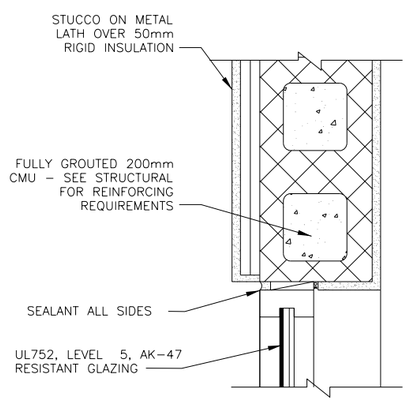

C WINDOW JAMB

05-A-501 SCALE: N.T.S.

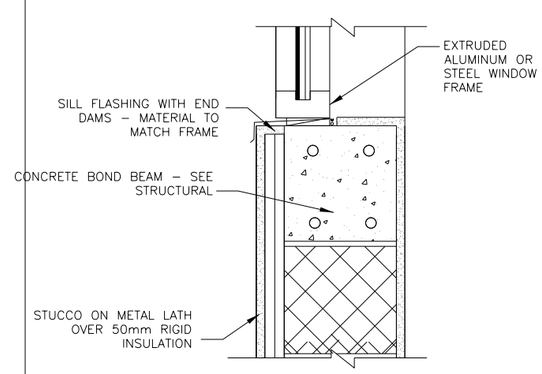

B WINDOW SILL

05-A-501 SCALE: N.T.S.

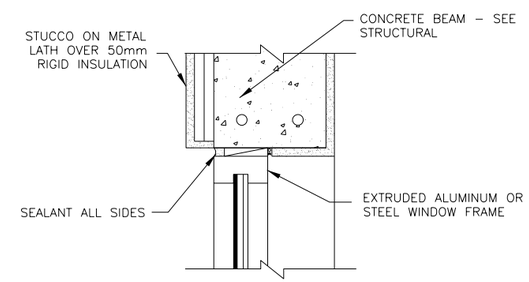

A WINDOW HEADER

05-A-501 SCALE: N.T.S.

REV	DATE	BY	SUB	APP	DESCRIPTION
0	06/30/10				SITE ADAPT CONSTRUCTION PLANS

DESIGNED N. SPAHIC
DRAWN C. JUNG
CHECKED J. ANDERSON
IN CHARGE D. WHEELER
DATE 30 JUNE 2010

AFGHAN NATIONAL SECURITY FORCE COMPREHENSIVE PLAN FOR FACILITIES DEVELOPMENT

MINISTRY OF INTERIOR (MoI) - AFGHAN NATIONAL POLICE PROVINCIAL FIRE STATION - TYPE-B

GUARD TOWER DOOR & WINDOW DETAILS

SCALE AS SHOWN

PROJECT NO. 6151-08-0328

05-A-501

DOOR SCHEDULE

DOOR No.	DIMENSION WIDTH	DIMENSION HGT.	DIMENSION THK.	DOOR TYPE	DOOR MAT.	FRAME MAT.	HARDWARE	THRESHOLD	FIRE RATED	MATERIAL
D-1	813	2200	45	1	MTL	HM	HW-1	ALUM	-	EXTERIOR DOOR WITH PLEXI-GLASS LITE

WINDOW SCHEDULE

WINDOW NUMBER	DIMENSION WIDTH	DIMENSION HEIGHT	WINDOW MAT.	WINDOW TYPE	OPENING SYSTEM	DESCRIPTION
WA	1400	1000	ALUM	A	AWNING	5MM GLASS ALUM CONSTRUCTION AND FIXED INSECT METAL SCREEN
WB	800	1000	ALUM	B	AWNING	5MM GLASS ALUM CONSTRUCTION AND FIXED INSECT METAL SCREEN

HARDWARE NOTES:

HW-1
1-1/2 PR HINGES
1 EA LOCKSET F04, OFFICE DOOR LOCK W/LEVERS, GRADE 1
1 EA THRESHOLD, J32130
1 SET WEATHERSEALS
1 SET SILENCERS

HW-2
1-1/2 PR HINGES
1 EA LOCKSET F02, PRIVACY LOCK W/LEVERS, GRADE 1
1 SET SILENCERS

DOOR TYPE NOTES:

1. DOORS AND FRAME COLORS SHALL MATCH ADJACENT WALL COLORS AS SELECTED BY THE CONTRACTING OFFICE.
2. HARDWARE SHALL BE HEAVY DUTY. COMMERCIAL GRADE, STAINLESS STEEL WITH A MATTE FINISH. THERE SHALL BE THREE HINGES AT EACH DOOR, AT LEAST 200/16/5MM, WITH BALL BERING , SECURED BY THREADED PINS.
3. FRAMES SHALL BE MOUNTED AND ADJUSTED IN ACCORDANCE WITH MANUFACTURER'S INSTRUCTIONS. FRAMES SHALL BE FASTENED WITH MINIMUM OF THREE FASTENING POINTS PER SIDE AT REGULAR INTERVALS.
4. ALL DOOR FRAMES SHALL BE FITTED WITH DOOR SILENCERS.
5. DIMENSIONS SHOWN ON DOOR SCHEDULE ARE BASED UPON MODULAR MASONRY (OR ROUGH OPENING), HEIGHT OF 2200MM FOR STANDARD PERSONAL DOORS. CONTRACTOR SHALL COORDINATE WITH DOOR SUPPLIER TO ENSURE THAT DIMENSIONS OF DOORS AND FRAMES PROVIDED ARE COMPATIBLE WITH DOOR OPENING DIMENSIONS.
6. ALL DOOR LOCKS SHALL MORTISED.
7. LOCK FUNCTION F04-OFFICE DOOR LOCK- LATCH BOLT OPERATED BY LEVER FROM EITHER SIDE EXCEPT WHEN OUTSIDE LEVER IS MADE INOPERATIVE BY A STOP OR MECHANICAL MEANS OTHER THAN A KEY. WHEN OUTSIDE LEVER IS LOCKED, LATCH BOLT MAY BE RETRACTED BY KEY FROM OUTSIDE OR BY ROTATING INSIDE LEVER.
8. LOCK FUNCTION F02- PRIVACY LOCK-LATCH BOLT OPERATED BY LEVER EITHER SIDE. DEADBOLT OPERATED BY TURN FROM INSIDE AND BY EMERGENCY KEY FROM OUTSIDE.

NOTES:

1. FOR HARDWARE SET DESCRIPTION SEE SPECIFICATIONS SECTION 08710 PARAGRAPH 3.5.
2. CONTRACTOR TO USE LOCALLY FABRICATED DOORS AND WINDOWS.

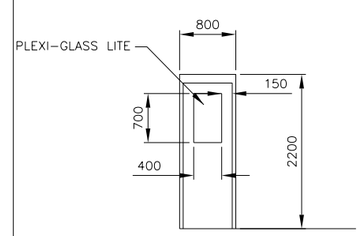

C DOOR
05-A-601 SCALE N.T.S.

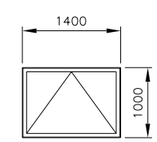

B WINDOW
05-A-601 SCALE N.T.S.

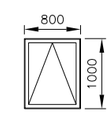

A WINDOW
05-A-601 SCALE N.T.S.

REV	DATE	BY	SUB	APP	DESCRIPTION
0	06/30/10				SITE ADAPT CONSTRUCTION PLANS

DESIGNED N. SPAHIC
DRAWN C. JUNG
CHECKED J. ANDERSON
IN CHARGE D. WHEELER
DATE 30 JUNE 2010

AFGHAN NATIONAL SECURITY FORCE COMPREHENSIVE PLAN FOR FACILITIES DEVELOPMENT

MINISTRY OF INTERIOR (MoI) - AFGHAN NATIONAL POLICE PROVINCIAL FIRE STATION - TYPE-B

GUARD TOWER DOOR & WINDOW SCHEDULE

SCALE AS SHOWN

PROJECT NO. 6151-08-0328

05-A-601

ROOM FINISH SCHEDULE

ROOM NO.	ROOM NAME	FLOOR MATERIAL	BASE MATERIAL	WALL MATERIAL	WALL FINISH	CEILING MATERIAL	CEILING FINISH	CEILING HEIGHT	DOOR & WINDOW FINISH MATERIAL	DOOR & WINDOW FINISH FINISH	REMARKS
100	GUARD TOWER	TT-1	MT-1	P	P-1	P	P-3	2400	MTD	P-4	

GENERAL FINISH NOTES/TYPICAL COLORS & MATERIAL SELECTION

FLOORING

CONC/S CONCRETE SEALED AND HARDENED WITH BROOM FINISH

TERRAZZO TILE (TT)
TT-1 AFGHAN LOCAL PRODUCT; 300mm X 300mm WITH SPECIAL POLISH

ENTRY MAT (MAT)
MAT-1 REESE PERFEC CLEAN ALUMINUM HINGE MAT; RECESSED FRAME WITH NO. 546 CARPET INSERTS, METAL FINISH: MIL ALUMINUM; CARPET INSERTS: MAUVE 8616 (NOT USED)

CERAMIC TILE (CT)
CT-1 R.A.K CERAMIC UAE; 300mm X 300mm UNPOLISHED PORCELAIN

CT-2 AFGHAN LOCAL PRODUCT; 300mm X 600mm POLISHED PORCELAIN

CT-3 AFGHAN LOCAL PRODUCT; 600mm X 1000mm UNPOLISHE PORCELAIN

CT-4 R.A.K CERAMIC UAE;#4/700RBEM-10 200mm X 200mm UNPOLISHE PORCELAIN

CT-5 R.A.K CERAMIC UAE;# 600CPAR-2 200mm X 300mm UNPOLISHE PORCELAIN

BASE TREATMENTS

MARBLE TILE (MT)
MT-1 AFGHAN LOCAL PRODUCT; 75mm X 100mm CROSS SHEEN PORCELAIN MARBLE TILE COVE BASE; #AXXX EMPRESS BLACK

WALL FINISHES

PAINT/EPOXY PAINT (P/EP):
P-1 BRIGHTO PAINTS; # 42 SAND STONE SUPER EMULSION

P-2 BRIGHTO PAINTS; # 127 CAMEO FOR EXTERNAL USE WEATHER SHIELD

P-3 BRIGHTO PAINTS; # X LATEX FOR WATER BASE WALL AND CEILING

P-4 BRIGHTO METALLIC ENAMEL; # 3 LIGHT GRAY SUITABLE FOR USE ON ALL TYPES OF INTERIOR AND EXTERIOR WOOD AND METAL SURFACES.

P-5 BRIGHTO METALLIC ENAMEL; # 42 ASH WHITE SUITABLE FOR USE ON ALL TYPES OF INTERIOR AND EXTERIOR WOOD AND METAL SURFACES.

P-6 BRIGHTO PAINTS; # 12 OFF WHITE

P-7 BRIGHTO PAINTS; #70 ROSE WHITE

P-8 BRIGHTO PAINTS; #69 LILY WHITE

P-9 BRIGHTO PAINTS; #40 PEACH CREAM

CERAMIC TILE (CT):
CT-4 R.A.K CERAMIC UAE;#4/700RBEM-10 200mm X 200mm UNPOLISHE PORCELAIN

CT-5 R.A.K CERAMIC UAE; # 600CPAR-2 200mm X 300mm UN-POLISHE

CEILING FINISHES

PAINTED CEILINGS (P)
P-1 BRIGHTO PAINT; # 12 OFF WHITE

MISCELLANEOUS SURFACES

LAMINATE SURFACES (LAM)
LAM-1 FORMICA; 953-58 ICE WHITE (BREAK ROOMS AND FMT COUNTERTOPS)
LAM-2 FORMICA; 7481-58 NATURAL BIRCH (BREAK ROOMS AND FMT- BASE AND UPPER CABINETS)
LAM-3 FORMICA; 1485-58 CHROME YELLOW (ELEVATOR)

TOILET PARTITIONS (TP)
S-1 NOT USED

SIGNAGE (S)
BACKGROUND COLOR: MATCH P-3, TEXT: WHITE

INTERIOR DOOR AND WINDOW FRAMES
P-4 BRIGHTO ; #3 LIGHT GRAY

INTERIOR WOOD DOORS AND TRIM
WHITE OAK, CLEAR FINISH, NO STAIN

MOVEABLE WALL (MW)
NOT USED

FINISH SCHEDULE ABBREVIATIONS

AFF	ABOVE FINISHED FLOOR	LAM	PLASTIC LAMINATE
ALSF	ALUMINUM STOREFRONT SYSTEM	MANUF	BY MANUFACTURER
		MAT	ENTRY MAT
ATC	ACOUSTIC TILE CEILING	MR	MOISTURE RESISTANT
CB	CEMENT BOARD	MTL	METAL PANEL
CONC/S	CONCRETE SEALED AND HARDENED WITH BROOM FINISH	MW	MOVABLE WALL
		NA	NOT APPLICABLE
		P	PAINT
CPT	CARPET	PREFIN	PREFINISHED
CT	CERAMIC TILE	RB	RESILIENT BASE
EP	EPOXY PAINT	RBP	RACQUETBALL PANEL
EXPOSED	EXPOSED STRUCTURE	VCT	VINYL COMPOSITION TILE
GN	GENERAL NOTE	MT	MARBLE TILE
GWB	GYPSUM WALL BOARD	MTD	METALLIC DOOR
HM	HOLLOW METAL	WD	WOOD DOOR
		TT	TERRAZZO TILE
		PVC	POLYVINYL

GENERAL NOTES

1. THE MANUFACTURER'S NAMES AND THEIR PRODUCTS REFERENCED ONLY INDICATE THE COLOR, TEXTURE, AND PATTERN REQUIRED FOR THE MATERIALS LISTED. THE PRODUCTS FURNISHED SHALL MEET THE COLOR, TEXTURE, AND PATTERN INDICATED AS WELL AS THE MATERIAL QUALITY AND PERFORMANCE SPECIFIED IN THE APPLICABLE TECHNICAL SPECIFICATIONS. THE USE OF MANUFACTURER'S NAMES AND PRODUCTS DO NOT PRECLUDE THE USE OF OTHER MANUFACTURER'S PRODUCTS OF APPROVED EQUAL COLOR, TEXTURE, AND/OR PATTERN IF ALL OTHER REQUIREMENTS ARE MET.
2. ALL VISIBLE GRILLES, DIFFUSERS, AND OTHER MECHANICAL RELATED FINISH OPENING DEVICES INCLUDING FIRE ALARMS SHALL BE PAINTED TO MATCH COLOR OF ADJACENT SURFACE.
3. REFER TO APPROPRIATE ARCHITECTURAL DRAWINGS AND DETAILS TO PROPERLY ASSESS THE FULL EXTENT OF WORK REQUIRED. SPECIFICALLY REFER TO THE REFLECTED CEILING PLANS AND BUILDING SECTIONS TO DETERMINE HEIGHTS OF REQUIRED WALL MATERIALS, SPECIAL CONDITIONS AND STRUCTURES, ETC.
4. REFER TO EXTERIOR ELEVATIONS FOR EXTERIOR FINISH SELECTIONS.
5. INFILL FLOOR AT SLAB RECESSES NOT TO RECEIVE CERAMIC TILE WITH CONCRETE LEVEL WITH ADJACENT FLOOR SURFACES PRIOR TO APPLYING FLOOR FINISH.
6. WALL AND CEILING GWB SURFACES SHALL BE PAINTED WITH FLAT FINISH, TRIM SHALL BE SEMI-GLOSS.
7. INSTALL PLASTIC BUMPER RAILS AND CORNER GUARDS AT MAIN CORRIDORS
8. INTERIOR SURFACE OF EXTERIOR METAL DOORS AND FRAMES SHOULD COMPLY WITH P-4

NOTE:
NOT ALL FINISHES APPLY TO ALL BUILDINGS.

REV	DATE	BY	SUB-APP	DESCRIPTION
0	06/30/10			SITE ADAPT CONSTRUCTION PLANS

DESIGNED N. SPAHIC
DRAWN C. JUNG
CHECKED J. ANDERSON
IN CHARGE D. WHEELER
DATE 30 JUNE 2010

AFGHAN NATIONAL SECURITY FORCE COMPREHENSIVE PLAN FOR FACILITIES DEVELOPMENT

MINISTRY OF INTERIOR (MoI) – AFGHAN NATIONAL POLICE PROVINCIAL FIRE STATION – TYPE-B

GUARD TOWER ROOM FINISH SCHEDULE

SCALE AS SHOWN

PROJECT NO. 6151-08-0328

05-A-602

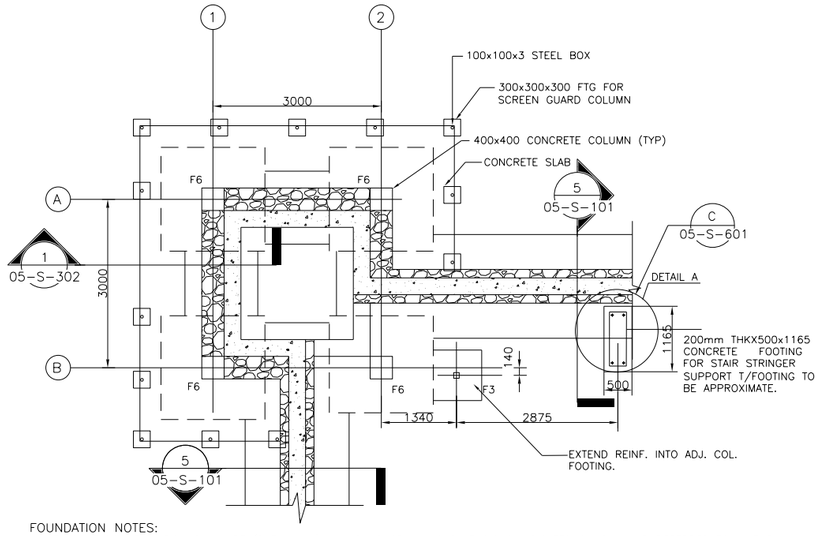

FOUNDATION NOTES:

1. FINISH FLOOR ELEVATION SHALL BE (DATUM 0.0). ALL PLUS OR MINUS DIMENSIONS INDICATED ON PLAN OR REFERRED TO IN THE NOTES RELATE TO FINISH FIRST FLOOR ELEVATIONS.
2. REFER TO ARCHITECTURAL DRAWINGS FOR MASONRY PARTITION TYPES.
3. FILL ALL CELLS OF CMU WITH GROUT FULLY ENTIRE WALL HEIGHT. REINFORCE ALL MASONRY WITH N16 BARS 400mm O.C.
4. CONCRETE ROOF AND FLOOR STRUCTURE SHALL BE POURED-IN-PLACE IN ONE CONTINUOUS OPERATION AND SHORED AS REQUIRED UNTIL THE CONCRETE REACHES 75% OF ITS 28 DAY COMPRESSIVE STRENGTH (F'c) AS A MINIMUM.
5. REFER TO 00-S-001 FOR ADDITIONAL NOTES & STRUCTURAL REQUIREMENTS.
6. REFER TO SHEET 00-S-201 FOR ADDITIONAL LOAD REQUIREMENTS.
7. REFER TO 00-S-003 & 00-S-501 FOR ADDITIONAL CONCRETE REINFORCING INFORMATION.
8. CONTRACTOR SHALL COORDINATE STEEL STAIR W/05-A-201.

1 FOUNDATION PLAN

05-S-101 SCALE: 1:50

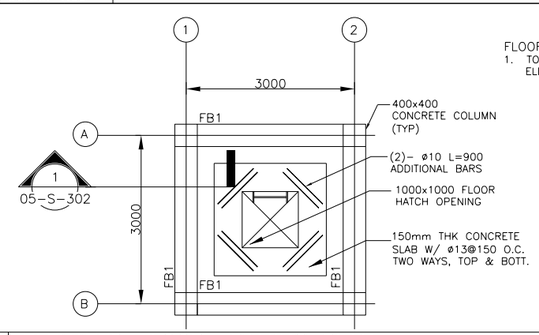

FLOOR FRAME NOTES:

1. TOP OF FINISHED FLOOR SLAB SHALL BE @ ELEVATION + 2800mm.

2 ELEVATED FLOOR FRAMING PLAN

05-S-101 SCALE: 1:50

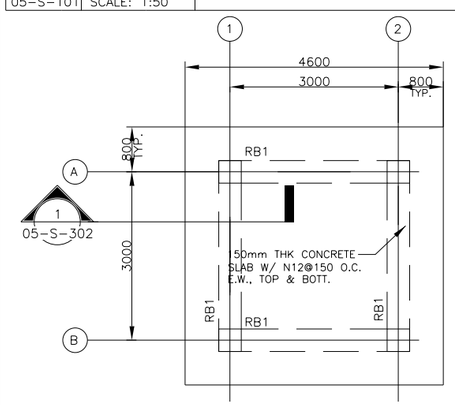

ROOF NOTES:

1. TOP OF FINISHED ROOF SLAB SHALL BE @ ELEVATION + 5400mm.
2. CONTRACTOR SHALL COORDINATE THE INSTALLATION OF COLD FORMED METAL TRUSS SYSTEM W/ ARCHITECTURAL SHEETS 05-A-201 & 05-A-301.

3 ROOF FRAMING PLAN

05-S-101 SCALE: 1:50

NOTES

1. REFER TO K_A101 FOR ADDITIONAL DETAILS.
2. CONTRACTOR TO COORDINATE EMBEDMENT PLATES W/ ARCHITECTURAL PLANS
3. CONTRACT SHALL COORDINATE & INSTALL 1-inch, 16 GA DOVETAILS @ 1220 O.C. W/ EACH FACE OF WALL AS REQUIRED BY ARCHITECTURE
4. CONTRACTOR SHALL COORDINATE THE INSTALLATION OF ALL EMBED PLATES PRIOR TO CASTING WALL.

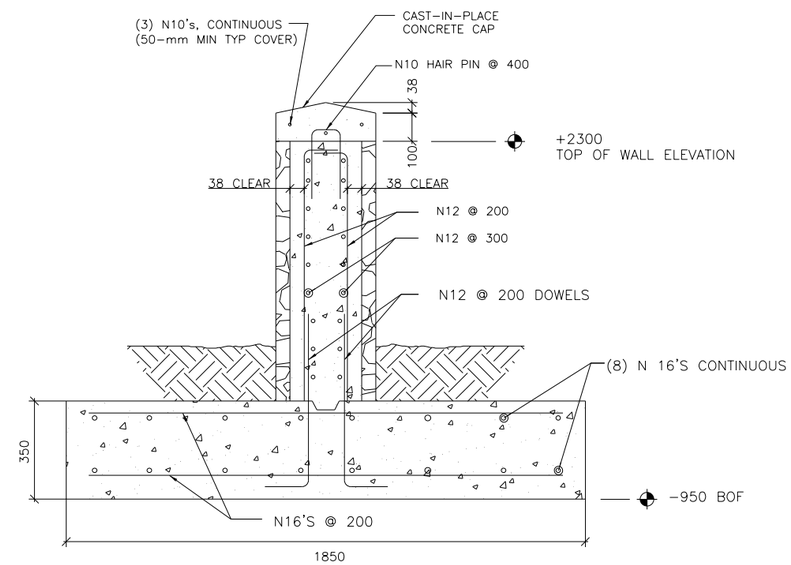

A WALL SECTION

05-S-101 SCALE: NTS

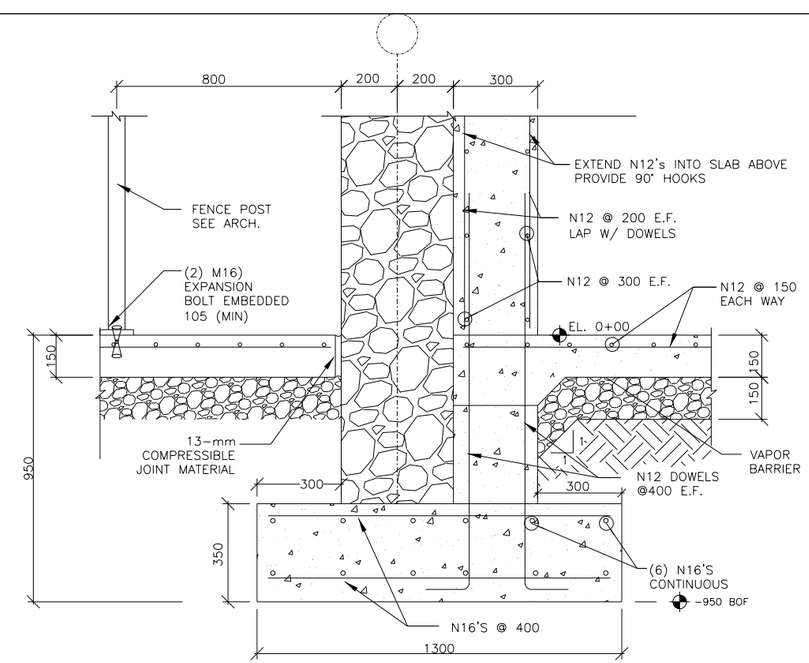

B SECTION

05-S-101 SCALE: NTS

REV	DATE	BY	SUB	APP	DESCRIPTION
0	06/30/10				SITE ADAPT CONSTRUCTION PLANS

DESIGNED V. STEGMEIR
DRAWN M. LORENZ
CHECKED M. GARVER
IN CHARGE D. WHEELER
DATE 30 JUNE 2010

AFGHAN NATIONAL SECURITY FORCE
COMPREHENSIVE PLAN FOR FACILITIES DEVELOPMENT

MINISTRY OF INTERIOR (MoI) – AFGHAN NATIONAL POLICE
PROVINCIAL FIRE STATION – TYPE-B

GUARD TOWER FOUNDATION & ROOF FRAMING PLAN

SCALE AS SHOWN

PROJECT NO. 6151-08-0328

05-S-101

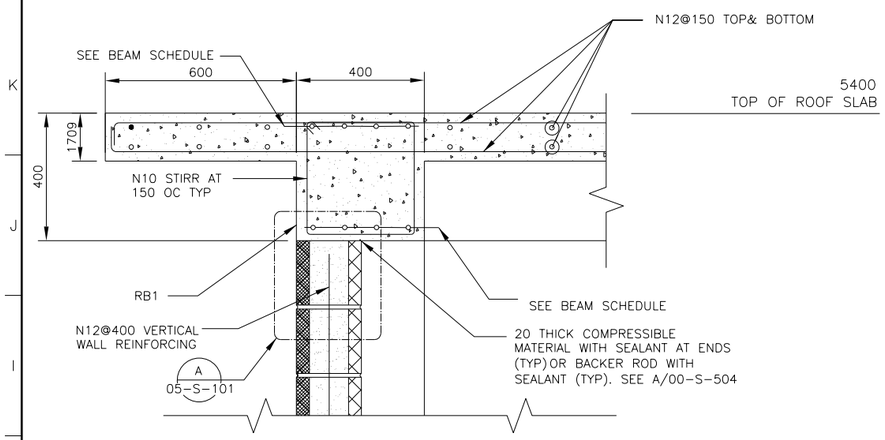

A SECTION
05-S-602 SCALE: NTS

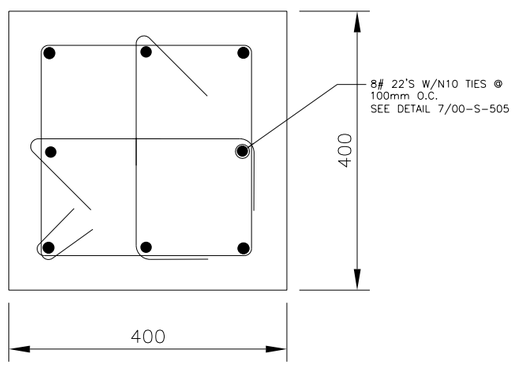

B SECTION
05-S-602 SCALE: NTS

CONCRETE BEAM SCHEDULE

FLOOR BEAM						
MARK	SIZE (BxH)	REINFORCING				REMARKS
		TOP	BOTTOM	STIRRUPS	MIDBAR	
FB1	400x400	(3)-N16	(3)-N16	N12 1 @ 50; 8@100; BALANCE @ 180	____	TOP BAR LAP AT CENTER BOT BAR LAP PAST COL

ROOF BEAM						
MARK	SIZE (BxH)	REINFORCING				REMARKS
		TOP	BOTTOM	STIRRUPS	MIDBAR	
RB1	400x400	(3)-N16	(3)-N16	N12 1 @ 50; 8@100; BALANCE @ 180	____	TOP BAR LAP AT CENTER BOT BAR LAP PAST COL

CONCRETE COLUMN SCHEDULE

MARK	SIZE	REINFORCING			REMARKS
	SIZE	1ST FLOOR	2ND FLOOR	STIRRPS	
	400x400	(8)-N25	(8)-N25	N12(3 PER SET) 3 @ 50mm (EA. END)REMAINDER @ 100mm	SEE B/03-S-601

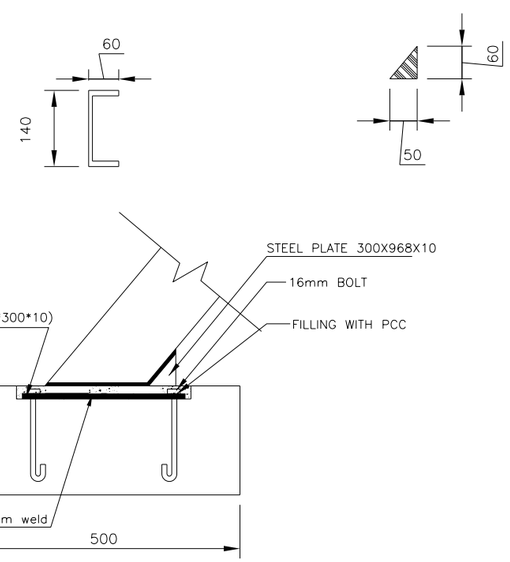

C SECTION
05-S-602 SCALE: NTS

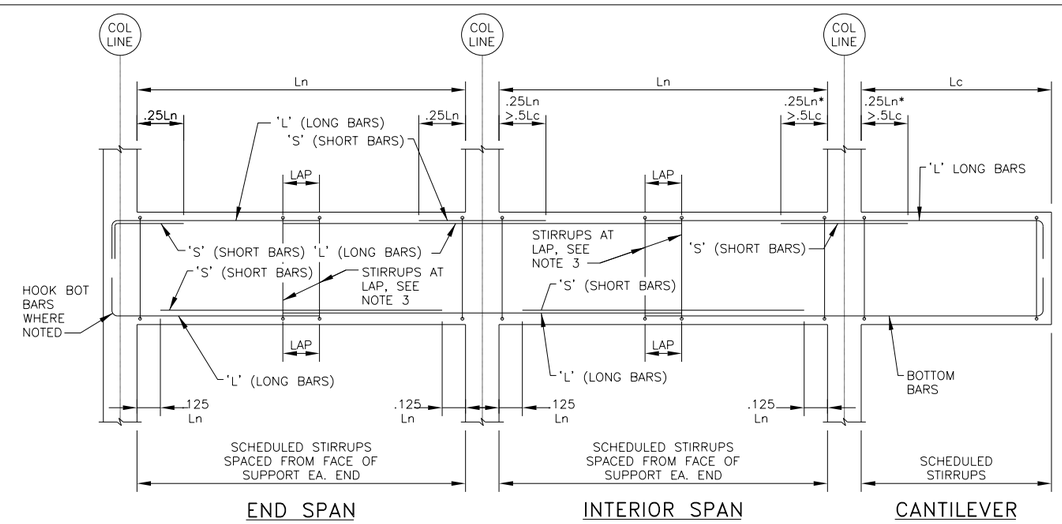

NOTES:
1. Ln* INDICATES GREATER OF TWO ADJACENT SPANS
2. FOR BAR LAPS SEE 3/00-S-501
3. MAX SPACING OF STIRRUPS @ LAP SHALL BE 10MM O.C.

D TYPICAL CONCRETE BEAM DIAGRAM
05-S-602 SCALE: NTS

REV	DATE	BY	SUB	APP	DESCRIPTION
0	06/30/10				SITE ADAPT CONSTRUCTION PLANS

DESIGNED W. STEGMEIR
DRAWN M. LORENZ
CHECKED M. GARVER
IN CHARGE D. WHEELER
DATE 30 JUNE 2010

AFGHAN NATIONAL SECURITY FORCE
COMPREHENSIVE PLAN FOR
FACILITIES DEVELOPMENT

MINISTRY OF INTERIOR (MoI) – AFGHAN NATIONAL POLICE
PROVINCIAL FIRE STATION – TYPE-B

GUARD TOWER STRUCTRUAL SECTIONS & SCHEDULES

SCALE AS SHOWN
PROJECT NO. 6151-08-0328

05-S-602

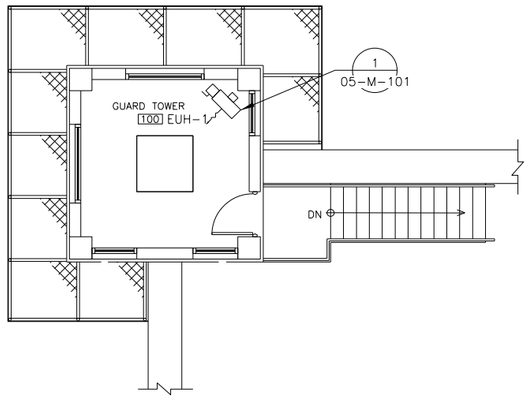

1 GUARD TOWER HVAC PLAN
05-M-101 1:50

ELECTRIC UNIT HEATER SCHEDULE											
NO.	BASIS OF DESIGN	VOLTAGE (V)	PHASE	NOMINAL WATTAGE (Kw)	BTU/hr	TOTAL CURRENT (A)	AIR DELIVERY		AIR TEMPERATURE RISE		REMARKS
							CFM	l/s	°F	°C	
EUH-1	RUFFNECK FE1	380	3	2.5	8,550	3.8	400	189	14.3	7.9	1

REMARKS:
1. PROVIDE WITH UNIT MOUNTED, FACTORY INSTALLED STARTER, DISCONNECT, AND THERMOSTAT.

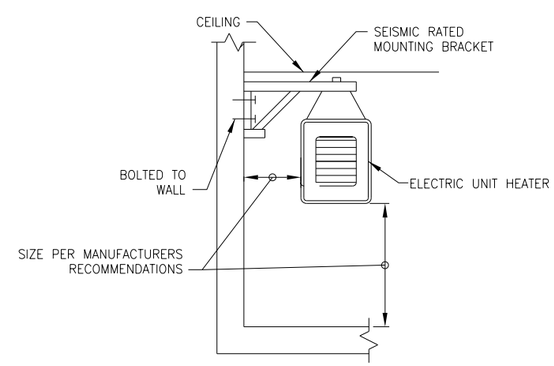

A ELECTRIC UNIT HEATER DETAIL
05-M-101 N.T.S.

REV	DATE	BY	SUB	APP	DESCRIPTION
0	06/30/10				SITE ADAPT CONSTRUCTION PLANS

DESIGNED M. FISHER
DRAWN C. JUNG
CHECKED J. MARIANETTI
IN CHARGE D. WHEELER
DATE 30 JUNE 2010

AFGHAN NATIONAL SECURITY FORCE
COMPREHENSIVE PLAN FOR FACILITIES DEVELOPMENT
MINISTRY OF INTERIOR (MoI) – AFGHAN NATIONAL POLICE
PROVINCIAL FIRE STATION – TYPE-B
GUARD TOWER MECHAINCAL HVAC PLAN

SCALE AS SHOWN
PROJECT NO. 6151-08-0328
05-M-101

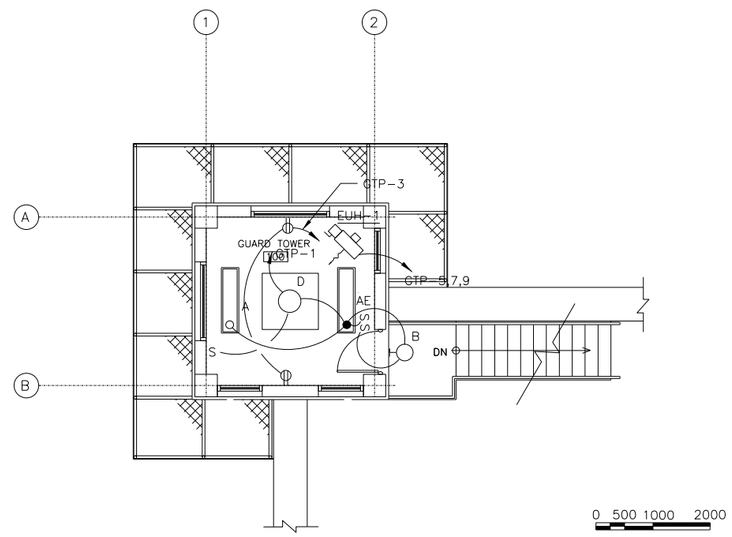

2 GUARD TOWER UPPER LEVEL ELECTRICAL PLAN

05-E-101 SCALE : 1:50

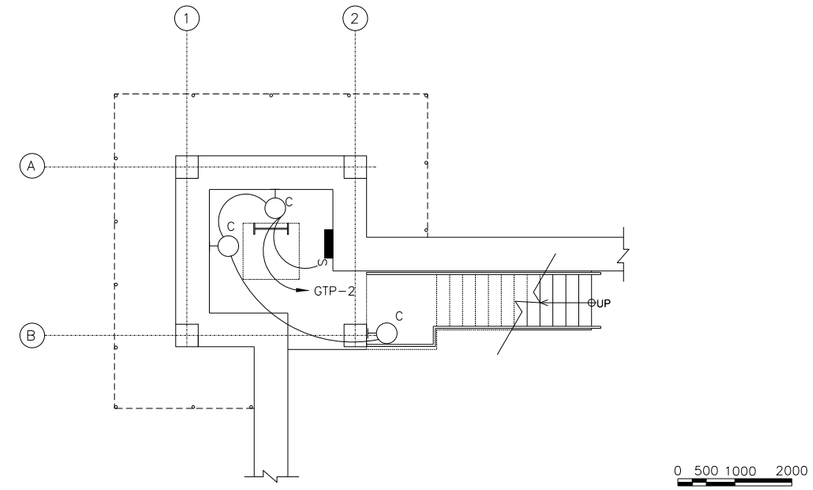

1 GUARD TOWER LOWER FLOOR ELECTRICAL PLAN

05-E-101 SCALE : 1:50

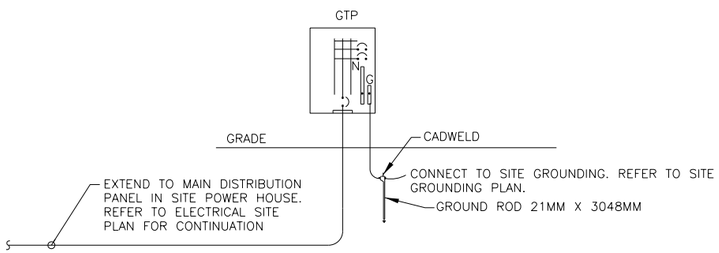

A POWER RISER DIAGRAM

05-E-101 SCALE :N.T.S

PANEL GTP TYPE MAIN BREAKER K.A.I.C 18,000 MIN. MOUNTING SURFACE

VOLTAGE 380/220V,3ø,4W MAINS 60 AMP ENTRY BOTTOM LOCATION GUARD TOWER LOWER FLOOR

POLE	TRIP	CONDUCTORS MM²	CONDUIT	DESIGNATION	KVA	NO	PHASE øA	PHASE øB	PHASE øC	NO	KVA	DESIGNATION	CONDUIT	CONDUCTORS MM²	TRIP	POLE
1	20A	2#4+#4 GND	21MM	LIGHTING	1.3	1	1.5			2	.2	LIGHTING	21MM	2#4+#4 GND	20A	1
1	20A	2#4+#4 GND	21MM	RECEPTACLES	.36	3		.36		4		SPARE			20A	1
3	20A	3#4+#4 GND	21MM	EUH-1	.85	5			.85	6		SPARE			20A	1
					.85	7	.85			8		SPARE			20A	1
					.85	9		.85		10		SPARE			20A	1
1	20A			SPARE		11				12						
						13				14						
						15				16						
						17				18						
						19				20						
						21				22						
						23				24						
						25				26						
						27				28						
						29				30						
					TOTAL:		2.2	1.2	.85	4.25 KVA /.66 X 1.25= 8 AMPS			USE 60 AMP PANEL			

GENERAL NOTES:

1. SEE SHEET 00-E-001 AND 00-E-002 FOR LEGEND, ABBREVIATIONS AND GENERAL NOTES.
2. EXHAUST FAN AND ELECTRIC UNIT HEATER DISCONNECT SWITCH PROVIDED BY MECHANICAL.
3. COORDINATE MECHANICAL EQUIPMENT WITH MECHANICAL DRAWINGS.
4. ALL EXPOSED INTERIOR CONDUITS SHALL BE RGS THREADED (TYPICAL FOR INTERIORS).
5. PANEL BOARD GTP SHALL BE SUITABLE FOR USE AS SERVICE EQUIPMENT WITH NEMA 3R ENCLOSURE.

LIGHTING FIXTURE SCHEDULE

MARK	LAMPS	VOLTAGE	FIXTURE DESCRIPTION OR MANUFACTURER AND CAT NO.	MOUNTING	NOTES
A	2-T832W	220	SURFACE MOUNTED FLUORESCENT WRAP AROUND WITH ACRYLIC LENS WITH HPF ELECTRONIC BALLAST WITH HPF ELECTRONIC BALLAST	SURFACE	
AE	2-T832W	220	SURFACE MOUNTED FLUORESCENT WRAP AROUND WITH ACRYLIC LENS WITH HPF ELECTRONIC BALLAST WITH EMERGENCY BATTERY BACKUP.	SURFACE	
B	1-100MH	220	WALL MOUNTED HID AREA FLOOD LIGHT WITH DARK BRONZE ALUMINUM HOUSING, HPF BALLAST AND ACRYLIC LENS.	BRACKET	
C	1-42DTT	220	WALL MOUNTED FLUORESCENT AREA FLOOD LIGHT WITH DARK BRONZE ALUMINUM HOUSING, HPF BALLAST AND ACRYLIC LENS.	BRACKET	
D	WITH UNIT	220	ROOF MOUNTED SEARCHLIGHT WITH REMOTE MANUAL CONTROLS. MARINE ALUMINUM AND STAINLESS STEEL HOUSING WEATHERPROOF DESIGN AROUND GLASS AND DOOR. LONG LIFE 1000 WATT XENON LAMP.	ON ROOF OF GUARD TOWER	

REV	DATE	BY	SUB	APP	DESCRIPTION
0	06/30/10				SITE ADAPT CONSTRUCTION PLANS

DESIGNED J. OLIMER
DRAWN L. KRAVCHUK
CHECKED B. CRAWFORD
IN CHARGE D. WHEELER
DATE 30 JUNE 2010

AFGHAN NATIONAL SECURITY FORCE COMPREHENSIVE PLAN FOR FACILITIES DEVELOPMENT

MINISTRY OF INTERIOR (MoI) - AFGHAN NATIONAL POLICE
PROVINCIAL FIRE STATION - TYPE-B

GUARD TOWER ELECTRICAL PLANS, SCHEDULES, & DETAILS

SCALE AS SHOWN

PROJECT NO. 6151-08-0328

05-E-101

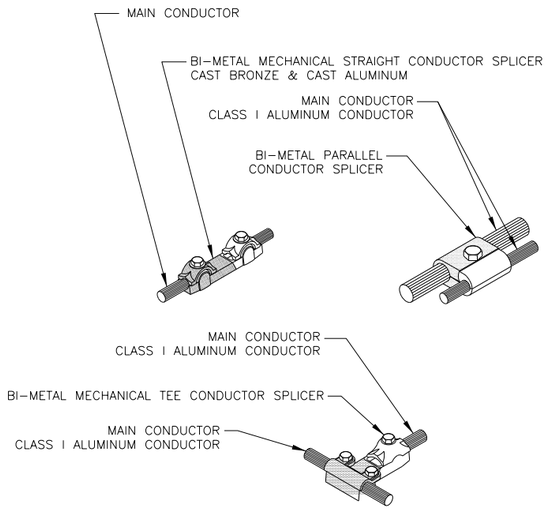

A BI-METAL CABLE CLAMPS AND SPLICERS

05-E-102 NOT TO SCALE

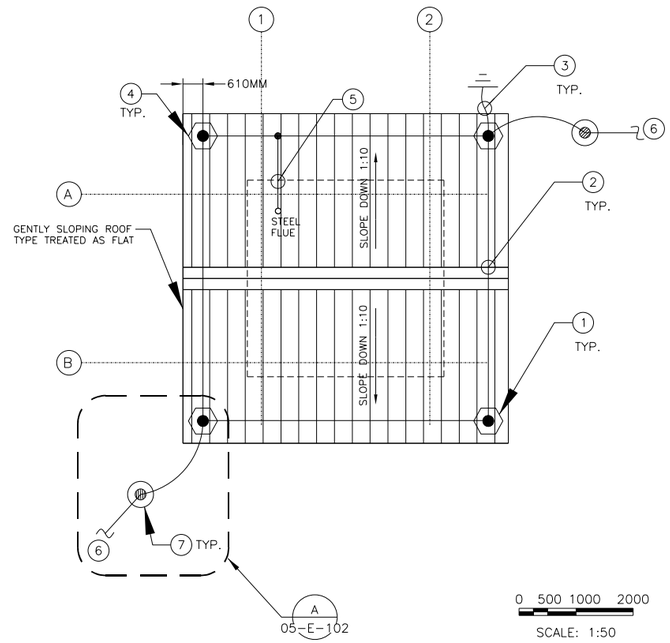

1 GUARD TOWER ROOF PLAN LIGHTNING PROTECTION

05-E-102 SCALE : 1:50

GENERAL NOTES:

1. SEE SHEET 00-E-001 AND 00-E-002 FOR LEGEND, ABBREVIATIONS AND GENERAL NOTES.
2. CLASS I COMPONENTS SHALL APPLY FOR THE GUARD TOWER, HEIGHT IS NOT MORE THAN 23M (75 FEET).
3. ALL LIGHTNING PROTECTION CONDUCTORS SHALL BE FASTENED NOT MORE THAN 914.4MM (3 FEET) MAXIMUM SPACING.
4. CONDUCTORS SHALL INTERCONNECT ALL AIR TERMINALS AND SHALL FORM A TWO-WAY PATH FROM EACH AIR TERMINAL HORIZONTALLY OR DOWNWARD TO CONNECTORS WITH GROUND RODS.
5. THE INSTALLATION OF THE LIGHTNING PROTECTION SYSTEM SHALL MEET THE REQUIREMENTS OF NATIONAL FIRE PROTECTION ASSOCIATION 780 AND UNDER WRITERS LAB UL96/96A.
6. AIR TERMINALS SHALL NOT BE LESS THAN 254MM (10 INCHES) LONG ABOVE THE OBJECT TO BE PROTECTED WHEN THE INTERVAL BETWEEN AIR TERMINALS IS NOT MORE THAN 6M (20 FEET).
7. AIR TERMINALS SHALL BE PLACED ON ALL CHIMNEYS, VENTS, AND ROOF TOP METAL BODIES WHEN SUCH CHIMNEYS, VENTS OR ROOF TOP METAL BODIES ARE NOT WITHIN A ZONE OF PROTECTION.
8. AT LEAST TWO DOWN CONDUCTORS SHALL BE INSTALLED.
9. RADIUS OF BEND SHALL NOT BE LESS THAN 203MM (8 INCHES).
10. PROVIDE #70MM² (#2/0 AWG) COPPER GROUNDING CONDUCTORS FOR THE LIGHTNING PROTECTION GROUNDING. ALL EXTERIOR GROUNDING CONDUCTORS SHALL BE BURIED A MINIMUM OF 762MM (30") BELOW GRADE OR 152.4MM (6") BELOW FROST LINE, WHICHEVER IS GREATER.

KEY NOTES:

1. AIR TERMINAL SHALL BE 12.7MMX457MM (1/2" X 18") ALUMINUM, 90 DEGREES VERTICAL. SEE DETAIL B/05-E-002.
2. MAIN CONDUCTORS SHALL BE (28 STRAND, 14 GAUGE CLASS 1 ALUMINUM ROOF CABLE, 58.9 KG/304.8M (130 POUNDS/1000 FEET), 15.875 MM DIAMETER, 70 MM² (#1/0)).
3. ALUMINUM DOWN CONDUCTORS SHALL BE CONNECTED TO COPPER DOWN CONDUCTOR AT LEAST 457MM (18 INCHES) ABOVE GRADE LEVEL. BIMETALLIC CONNECTORS WILL BE USED. SEE DETAILS ON THIS SHEET FOR BIMETALLIC CONNECTORS.
4. 610 MM (2 FEET) MAXIMUM SPACING FROM RIDGE END.
5. CONDUCTORS SHALL MAINTAIN A HORIZONTAL OR DOWNWARD COURSE, FREE FROM 'V' OR 'U' POCKETS.
6. SEE SHEET 00-E-102 FOR CONTINUATION TO SITE GROUNDING PLAN.
7. PROVIDE AND INSTALL 19MMX3048MM (3/4" X 10'-0") COPPER CLAD STEEL GROUND RODS. IF ROCK IS ENCOUNTERED, GROUND ROD MAY BE INSTALLED WITH A MAXIMUM VARIATION OF 30 DEGREES FROM VERTICAL.

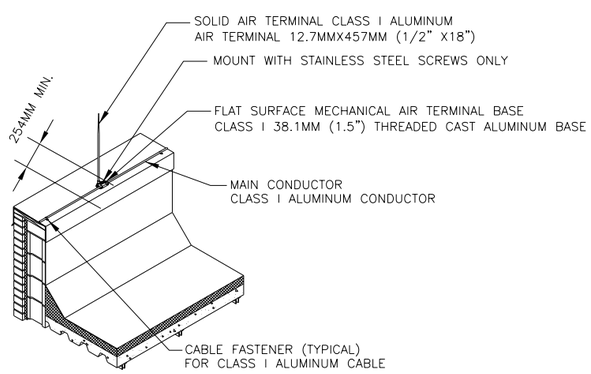

B AIR TERMINAL DETAIL

05-E-102 NOT TO SCALE

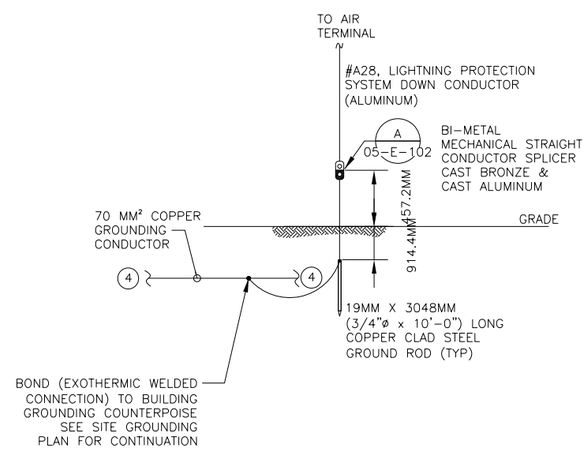

C BONDING LIGHTNING PROTECTION TO GROUND

05-E-102 NOT TO SCALE

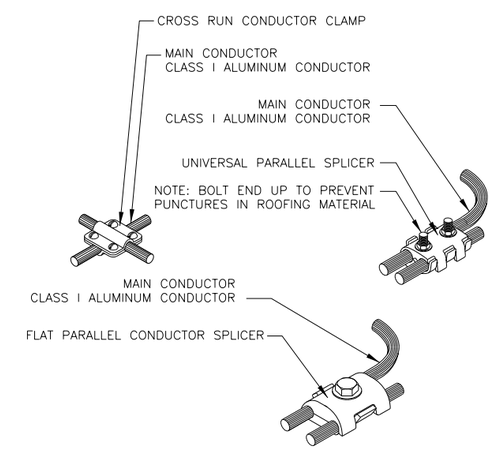

D CABLE CLAMPS AND SPLICERS

05-E-102 NOT TO SCALE

REV	DATE	BY	SUB	APP	DESCRIPTION
0	06/30/10				SITE ADAPT CONSTRUCTION PLANS

DESIGNED M. ESTAFANOUS
DRAWN L. KRAVCHUK
CHECKED B. CRAWFORD
IN CHARGE D. WHEELER
DATE 30 JUNE 2010

AFGHAN NATIONAL SECURITY FORCE
COMPREHENSIVE PLAN FOR
FACILITIES DEVELOPMENT

MINISTRY OF INTERIOR (MoI) – AFGHAN NATIONAL POLICE
PROVINCIAL FIRE STATION – TYPE-B

GUARD TOWER LIGHTNING PROTECTION PLAN

SCALE
AS SHOWN

PROJECT NO.
6151-08-0328

05-E-102

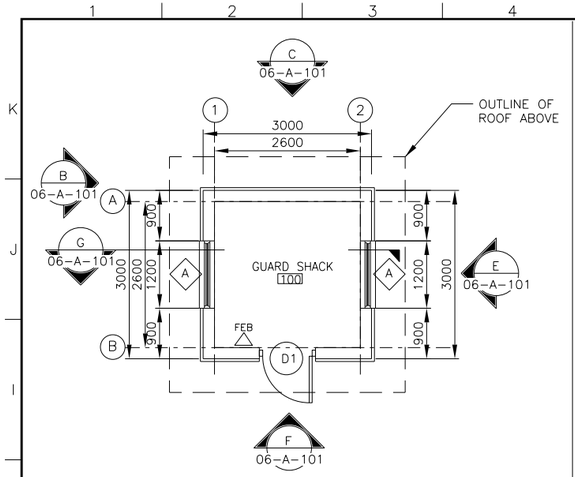

1 FLOOR PLAN
06-A-101 SCALE 1:50

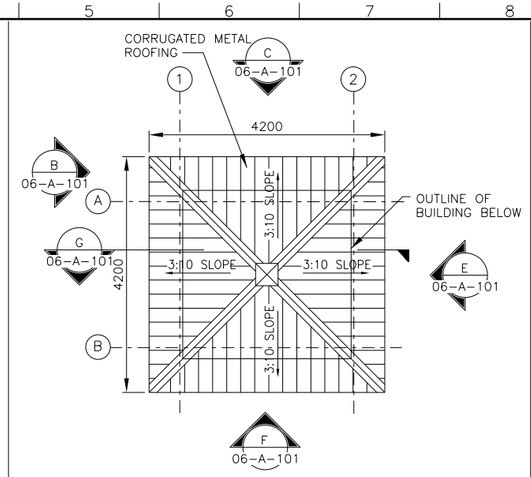

2 ROOF PLAN
06-A-101 SCALE 1:50

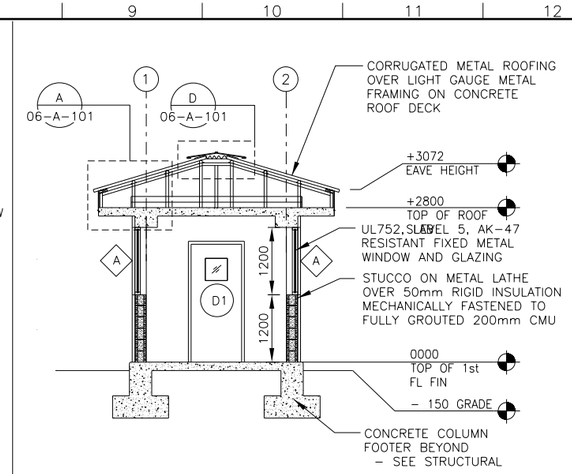

G BUILDING SECTION - 1
06-A-101 SCALE 1:50

LEGEND:

- D1 — DOOR TYPE, SEE SHEET A103
- A — WINDOW TYPE, SEE SHEET A103
- FEB — FIRE EXTINGUISHER AND WALL MOUNTED BRACKET

GENERAL NOTES:

1. WALL FINISHES SHALL BE AS INDICATED IN SCHEDULE ON 06-A-602
2. SURFACES TO BE PAINTED SHALL BE CLEAN AND FREE OF FOREIGN MATTER BEFORE APPLICATION IF PAINT. CLEANING SHALL BE SCHEDULED SO THAT DUST AND OTHER CONTAMINANTS WILL NOT FALL ON WET, NEWLY PAINTED SURFACES.
3. 3CONCRETE AND INTERIOR MASONRY SURFACES GROUTED SOLID SHALL BE ALLOWED TO DRY AT LEAST 30 DAYS BEFORE PAINTING.
4. PAINTS CONTAINING LEAD IN EXCESS OF 0.6 PERCENT BY WEIGHT OF THE TOTAL NONVOLATILE CONTENT SHALL NOT BE USED.
5. MERCURIAL FUNGICIDES SHALL NOT BE USED IN OIL-BASE PAINT.
6. REMOVE LOOSE DIRT AND CLEAN SURFACES BEFORE PAINTING. APPLY PAINT TO INTERIOR STRUCTURAL RIGID FRAMING AND CEILINGS AND TEST FOR ADHESION. PRIMER COAT FOR MASONRY INITIAL FIRST COAT WITH AN ACRYLIC LATEX PAINT FOR EXTERIOR SURFACES AND A SECOND COAT WITH A WATER REPELLENT ACRYLIC LATEX PAINT.

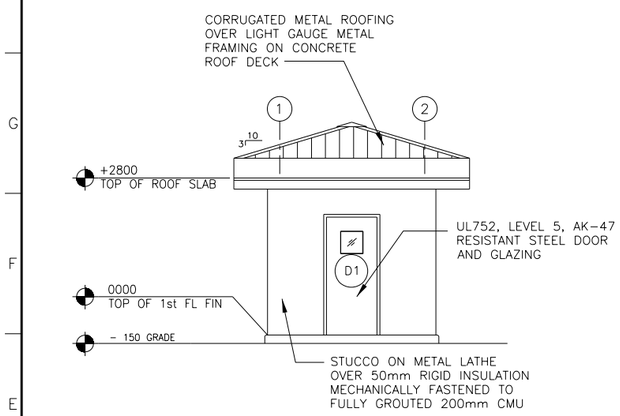

F ELEVATION
06-A-101 SCALE 1:50

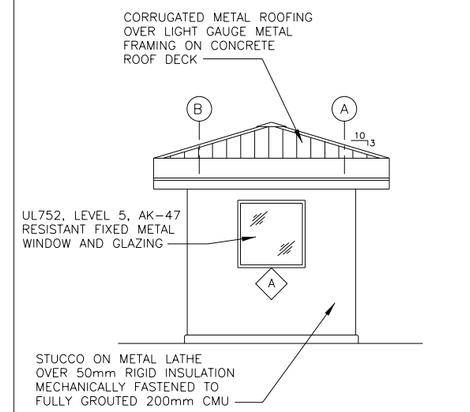

E ELEVATION
06-A-101 SCALE 1:50

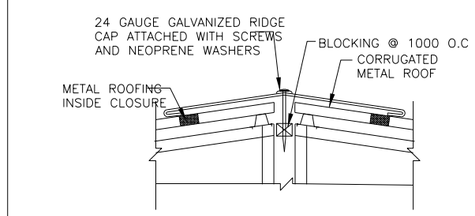

D TYPICAL RIDGE AND CAP DETAIL
06-A-101 SCALE N.T.S.

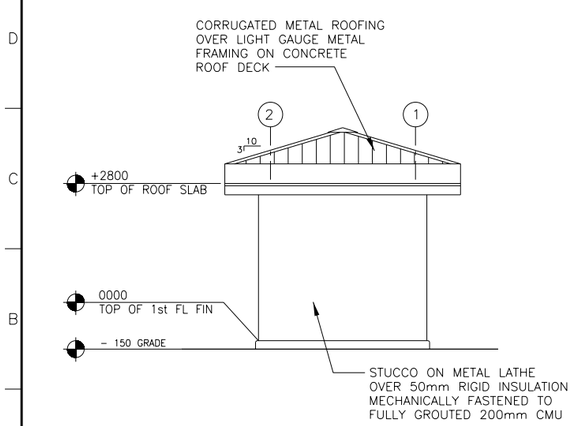

C ELEVATION
06-A-101 SCALE 1:50

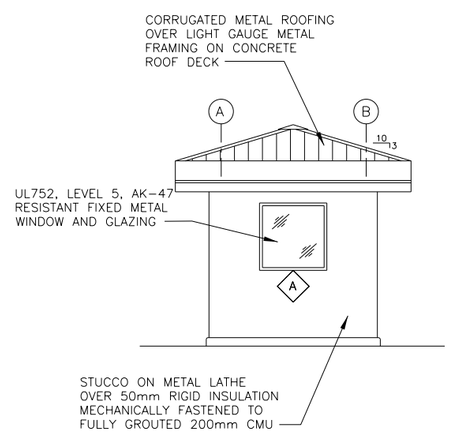

B ELEVATION
06-A-101 SCALE: 1:50

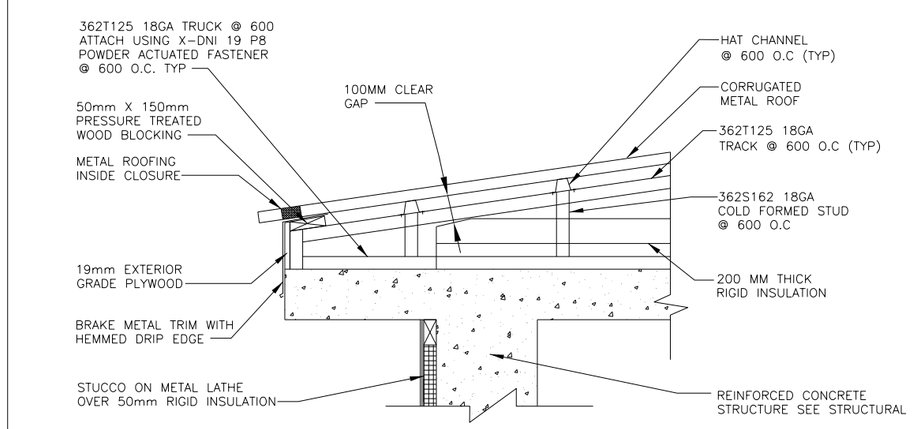

A EAVE DETAIL
06-A-101 SCALE: N.T.S.

REV	DATE	BY	SUB/APP	DESCRIPTION
0	06/30/10			SITE ADAPT CONSTRUCTION PLANS

DESIGNED N. SPAHIC
DRAWN C. JUNG
CHECKED J. ANDERSON
IN CHARGE D. WHEELER
DATE 30 JUNE 2010

AFGHAN NATIONAL SECURITY FORCE
COMPREHENSIVE PLAN FOR FACILITIES DEVELOPMENT

MINISTRY OF INTERIOR (MoI) - AFGHAN NATIONAL POLICE
PROVINCIAL FIRE STATION - TYPE-B

GUARD SHACK PLAN, ELEVATIONS, BUILDING SECTION & EAVE DETAIL

SCALE AS SHOWN

PROJECT NO. 6151-08-0328

06-A-101

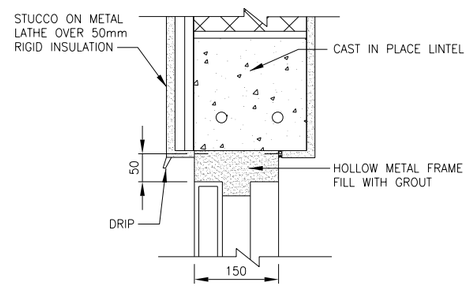

F EXTERIOR DOOR HEAD
06-A-501 SCALE 1:5

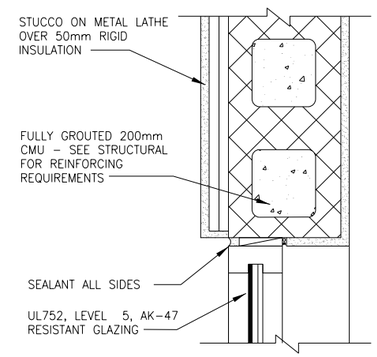

E WINDOW JAMB
06-A-501 SCALE 1:5

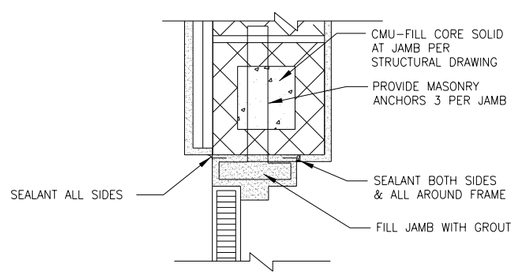

D EXTERIOR DOOR JAMB
06-A-501 SCALE 1:5

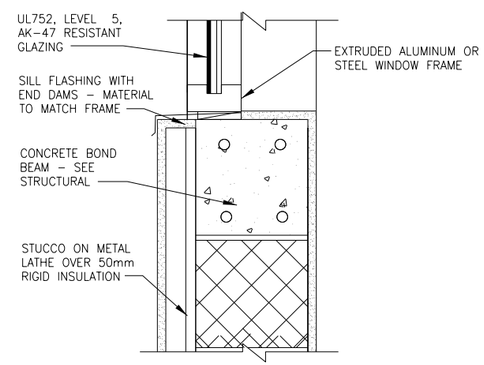

C WINDOW SILL
06-A-501 SCALE 1:5

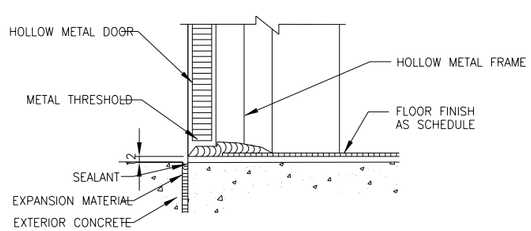

B EXTERIOR DOOR SILL
06-A-501 SCALE 1:5

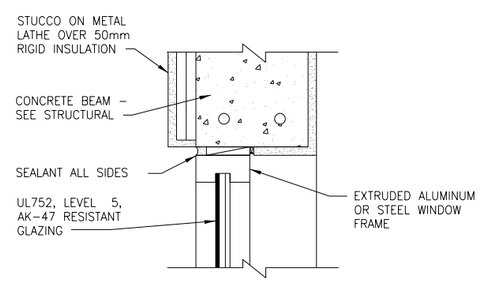

A WINDOW HEAD
06-A-501 SCALE 1:5

WINDOW TYPE NOTES:

1. WINDOW FRAME SHOULD BE EXTRUDED ALUMINUM OR STEEL
2. ALL WINDOW AND GLAZING SHALL MEET THE REQUIREMENTS UL752, LEVEL 5 RESISTANCE FOR PROTECTION AGAINST AK-47 FIRE.

REV	DATE	BY	SUB-APP	DESCRIPTION
0	06/30/10			SITE ADAPT CONSTRUCTION PLANS

DESIGNED N. SPAHIC
DRAWN C. JUNG
CHECKED J. ANDERSON
IN CHARGE D. WHEELER
DATE 30 JUNE 2010

AFGHAN NATIONAL SECURITY FORCE COMPREHENSIVE PLAN FOR FACILITIES DEVELOPMENT

MINISTRY OF INTERIOR (MoI) – AFGHAN NATIONAL POLICE PROVINCIAL FIRE STATION – TYPE-B

GUARD SHACK DOOR DETAILS

SCALE AS SHOWN

PROJECT NO. 6151-08-0328

06-A-501

DOOR SCHEDULE

DOOR No.	DIMENSION			DOOR TYPE	DOOR MAT.	FRAME MAT.	HARDWARE	THRESHOLD	FIRE RATED	MATERIAL
	WIDTH	HGT.	THK.							
D-1	914	2150	45	1	MTL	HM	HW-1	ALUM	–	EXTERIOR DOOR WITH BULLET RESISTANT GLAZING

WINDOW SCHEDULE

WINDOW NUMBER	DIMENSION		WINDOW MAT.	WINDOW TYPE	OPENING SYSTEM	DESCRIPTION
	WIDTH	HEIGHT				
WA	1200	1200	ALUM	A	SLIDER	BULLET RESISTANT GLAZING ALUM CONSTRUCTION AND FIXED INSECT SCREEN

HARDWARE NOTES:

HW-1 1-1/2 PR HINGES
1 EA LOCKSET F04, OFFICE DOOR LOCK W/LEVERS, GRADE 1
1 EA THRESHOLD, J32130
1 SET WEATHERSEALS
1 SET SILENCERS

HW-2 1-1/2 PR HINGES
1 EA LOCKSET F02, PRIVACY LOCK W/LEVERS, GRADE 1
1 SET SILENCERS

DOOR TYPE NOTES:

1. EXTERIOR DOOR, INCLUDING GLAZING, SHALL MEET THE REQUIREMENTS OF UL752, LEVEL 5 RESISTANCE FOR PROTECTION AGAINST AK-47 FIRE.

2. DOORS AND FRAME COLORS SHALL MATCH ADJACENT WALL COLORS AS SELECTED BY THE CONTRACTING OFFICE.

3. HARDWARE SHALL BE HEAVY DUTY. COMMERCIAL GRADE, STAINLESS STEEL WITH A MATTE FINISH. THERE SHALL BE THREE HINGES AT EACH DOOR, AT LEAST 200/16/5MM, WITH BALL BERING , SECURED BY THREADED PINS.

4. FRAMES SHALL BE MOUNTED AND ADJUSTED IN ACCORDANCE WITH MANUFACTURER'S INSTRUCTIONS. FRAMES SHALL BE FASTENED WITH MINIMUM OF THREE FASTENING POINTS PER SIDE AT REGULAR INTERVALS.

5. ALL DOOR FRAMES SHALL BE FITTED WITH DOOR SILENCERS.

6. DIMENSIONS SHOWN ON DOOR SCHEDULE ARE BASED UPON MODULAR MASONRY (OR ROUGH OPENING), HEIGHT OF 2200MM FOR STANDARD PERSONAL DOORS. CONTRACTOR SHALL COORDINATE WITH DOOR SUPPLIER TO ENSURE THAT DIMENSIONS OF DOORS AND FRAMES PROVIDED ARE COMPATIBLE WITH DOOR OPENING DIMENSIONS.

7. ALL DOOR LOCKS SHALL MORTISED.

8. LOCK FUNCTION F04-OFFICE DOOR LOCK- LATCH BOLT OPERATED BY LEVER FROM EITHER SIDE EXCEPT WHEN OUTSIDE LEVER IS MADE INOPERATIVE BY A STOP OR MECHANICAL MEANS OTHER THAN A KEY. WHEN OUTSIDE LEVER IS LOCKED, LATCH BOLT MAY BE RETRACTED BY KEY FROM OUTSIDE OR BY ROTATING INSIDE LEVER.

9. LOCK FUNCTION F02- PRIVACY LOCK-LATCH BOLT OPERATED BY LEVER EITHER SIDE. DEADBOLT OPERATED BY TURN FROM INSIDE AND BY EMERGENCY KEY FROM OUTSIDE

NOTES:

1. FOR HARDWARE SET DESCRIPTION SEE SPECIFICATIONS SECTION 08710 PARAGRAPH 3.5.

2. CONTRACTOR TO USE LOCALLY FABRICATED DOORS AND WINDOWS.

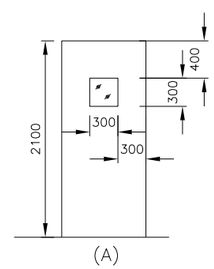

(A)

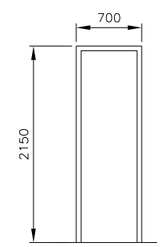

(B)

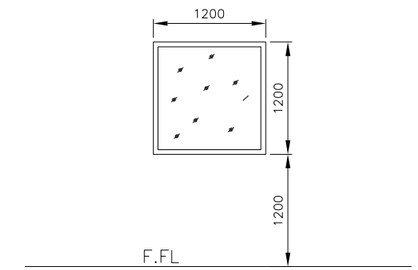

C	DOOR	B	DOOR FRAME	A	WINDOW
06-A-601	SCALE: N.T.S.	06-A-601	SCALE: N.T.S.	06-A-601	SCALE: N.T.S.

REV	DATE	BY	SUB	APP	DESCRIPTION
0	06/30/10				SITE ADAPT CONSTRUCTION PLANS

DESIGNED N. SPAHIC
DRAWN C. JUNG
CHECKED J. ANDERSON
IN CHARGE D. WHEELER
DATE 30 JUNE 2010

AFGHAN NATIONAL SECURITY FORCE COMPREHENSIVE PLAN FOR FACILITIES DEVELOPMENT

MINISTRY OF INTERIOR (MoI) – AFGHAN NATIONAL POLICE PROVINCIAL FIRE STATION – TYPE-B

GUARD SHACK DOOR & WINDOW SCHEDULE

SCALE AS SHOWN

PROJECT NO. 6151-08-0328

06-A-601

ROOM FINISH SCHEDULE

ROOM NO.	ROOM NAME	FLOOR MATERIAL	BASE MATERIAL	WALL MATERIAL	WALL FINISH	CEILING MATERIAL	CEILING FINISH	CEILING HEIGHT	DOOR & WINDOW FINISH MATERIAL	DOOR & WINDOW FINISH FINISH	REMARKS
100	GUARD SHACK	TT-1	MT-1	P	P-1	P	P-3	2600	MTL	P-4	

GENERAL FINISH NOTES/TYPICAL COLORS & MATERIAL SELECTION

FLOORING

CONC/S CONCRETE SEALED AND HARDENED WITH BROOM FINISH

TERRAZZO TILE (TT)
TT-1 AFGHAN LOCAL PRODUCT; 300mm X 300mm WITH SPECIAL POLISH

ENTRY MAT (MAT)
MAT-1 REESE PERFEC CLEAN ALUMINUM HINGE MAT; RECESSED FRAME WITH NO. 546 CARPET INSERTS, METAL FINISH: MIL ALUMINUM; CARPET INSERTS: MAUVE 8616

CERAMIC TILE (CT)
CT-1 R.A.K CERAMIC UAE; 300mm X 300mm UNPOLISHED PORCELAIN

CT-2 AFGHAN LOCAL PRODUCT; 300mm X 600mm POLISHED PORCELAIN

CT-3 AFGHAN LOCAL PRODUCT; 600mm X 1000mm UNPOLISHE PORCELAIN

CT-4 R.A.K CERAMIC UAE;#4/700RBEM-10 200mm X 200mm UNPOLISHE PORCELAIN

CT-5 R.A.K CERAMIC UAE;# 600CPAR-2 200mm X 300mm UNPOLISHE PORCELAIN

BASE TREATMENTS

MARBLE TILE (MT)
MT-1 AFGHAN LOCAL PRODUCT; 75mm X 100mm CROSS SHEEN PORCELAIN MARBLE TILE COVE BASE; #AXXX EMPRESS BLACK

WALL FINISHES

PAINT/EPOXY PAINT (P/EP):
P-1 BRIGHTO PAINTS; # 42 SAND STONE SUPER EMULSION

P-2 BRIGHTO PAINTS; # 127 CAMEO FOR EXTERNAL USE WEATHER SHIELD

P-3 BRIGHTO PAINTS; # X LATEX FOR WATER BASE WALL AND CEILING

P-4 BRIGHTO METALLIC ENAMEL; # 3 LIGHT GRAY SUITABLE FOR USE ON ALL TYPES OF INTERIOR AND EXTERIOR WOOD AND METAL SURFACES.

P-5 BRIGHTO METALLIC ENAMEL; # 42 ASH WHITE SUITABLE FOR USE ON ALL TYPES OF INTERIOR AND EXTERIOR WOOD AND METAL SURFACES.

P-6 BRIGHTO PAINTS; # 12 OFF WHITE

P-7 BRIGHTO PAINTS; #70 ROSE WHITE

P-8 BRIGHTO PAINTS; #69 LILY WHITE

P-9 BRIGHTO PAINTS; #40 PEACH CREAM

CERAMIC TILE (CT):
CT-4 R.A.K CERAMIC UAE;#4/700RBEM-10 200mm X 200mm UNPOLISHE PORCELAIN

CT-5 R.A.K CERAMIC UAE; # 600CPAR-2 200mm X 300mm UN-POLISHE

CEILING FINISHES

PAINTED CEILINGS (P)
P-1 BRIGHTO PAINT; # 12 OFF WHITE

MISCELLANEOUS SURFACES

LAMINATE SURFACES (LAM)
LAM-1 FORMICA; 953-58 ICE WHITE (BREAK ROOMS AND FMT COUNTERTOPS)
LAM-2 FORMICA; 7481-58 NATURAL BIRCH (BREAK ROOMS AND FMT- BASE AND UPPER CABINETS)
LAM-3 FORMICA; 1485-58 CHROME YELLOW (ELEVATOR)

TOILET PARTITIONS (TP)
NOT USED

SIGNAGE (S)
S-1 BACKGROUND COLOR: MATCH P-3, TEXT: WHITE

INTERIOR DOOR AND WINDOW FRAMES
P-4 BRIGHTO ; #3 LIGHT GRAY

INTERIOR WOOD DOORS AND TRIM
WHITE OAK, CLEAR FINISH, NO STAIN

MOVEABLE WALL (MW)
NOT USED

FINISH SCHEDULE ABBREVIATIONS

AFF	ABOVE FINISHED FLOOR	LAM	PLASTIC LAMINATE
ALSF	ALUMINUM STOREFRONT SYSTEM	MANUF	BY MANUFACTURER
ATC	ACOUSTIC TILE CEILING	MAT	ENTRY MAT
CB	CEMENT BOARD	MR	MOISTURE RESISTANT
CONC/S	CONCRETE SEALED AND HARDENED WITH BROOM FINISH	MTL	METAL PANEL
		MW	MOVABLE WALL
		NA	NOT APPLICABLE
		P	PAINT
CPT	CARPET	PREFIN	PREFINISHED
CT	CERAMIC TILE	RB	RESILIENT BASE
EP	EPOXY PAINT	RBP	RACQUETBALL PANEL
EXPOSED	EXPOSED STRUCTURE	VCT	VINYL COMPOSITION TILE
GN	GENERAL NOTE	MT	MARBLE TILE
GWB	GYPSUM WALL BOARD	MTD	METALLIC DOOR
HM	HOLLOW METAL	WD	WOOD DOOR
		TT	TERRAZZO TILE
		PVC	POLYVINYL

GENERAL NOTES

1. THE MANUFACTURER'S NAMES AND THEIR PRODUCTS REFERENCED ONLY INDICATE THE COLOR, TEXTURE, AND PATTERN REQUIRED FOR THE MATERIALS LISTED. THE PRODUCTS FURNISHED SHALL MEET THE COLOR, TEXTURE, AND PATTERN INDICATED AS WELL AS THE MATERIAL QUALITY AND PERFORMANCE SPECIFIED IN THE APPLICABLE TECHNICAL SPECIFICATIONS. THE USE OF MANUFACTURER'S NAMES AND PRODUCTS DO NOT PRECLUDE THE USE OF OTHER MANUFACTURER'S PRODUCTS OF APPROVED EQUAL COLOR, TEXTURE, AND/OR PATTERN IF ALL OTHER REQUIREMENTS ARE MET.
2. ALL VISIBLE GRILLES, DIFFUSERS, AND OTHER MECHANICAL RELATED FINISH OPENING DEVICES INCLUDING FIRE ALARMS SHALL BE PAINTED TO MATCH COLOR OF ADJACENT SURFACE.
3. REFER TO APPROPRIATE ARCHITECTURAL DRAWINGS AND DETAILS TO PROPERLY ASSESS THE FULL EXTENT OF WORK REQUIRED. SPECIFICALLY REFER TO THE REFLECTED CEILING PLANS AND BUILDING SECTIONS TO DETERMINE HEIGHTS OF REQUIRED WALL MATERIALS, SPECIAL CONDITIONS AND STRUCTURES, ETC.
4. REFER TO EXTERIOR ELEVATIONS FOR EXTERIOR FINISH SELECTIONS.
5. INFILL FLOOR AT SLAB RECESSES NOT TO RECEIVE CERAMIC TILE WITH CONCRETE LEVEL WITH ADJACENT FLOOR SURFACES PRIOR TO APPLYING FLOOR FINISH.
6. WALL AND CEILING GWB SURFACES SHALL BE PAINTED WITH FLAT FINISH, TRIM SHALL BE SEMI-GLOSS.
7. INSTALL PLASTIC BUMPER RAILS AND CORNER GUARDS AT MAIN CORRIDORS
8. INTERIOR SURFACE OF EXTERIOR METAL DOORS AND FRAMES SHOULD COMPLY WITH P-4

NOTE:
NOT ALL FINISHES APPLY TO ALL BUILDINGS.

REV	DATE	BY	SUB	APP	DESCRIPTION
0	06/30/10				SITE ADAPT CONSTRUCTION PLANS

DESIGNED N. SPAHIC
DRAWN C. JUNG
CHECKED J. ANDERSON
IN CHARGE D. WHEELER
DATE 30 JUNE 2010

AFGHAN NATIONAL SECURITY FORCE
COMPREHENSIVE PLAN FOR FACILITIES DEVELOPMENT
MINISTRY OF INTERIOR (MoI) - AFGHAN NATIONAL POLICE
PROVINCIAL FIRE STATION - TYPE-B
GUARD SHACK ROOM FINISH SCHEDULE

SCALE AS SHOWN
PROJECT NO. 6151-08-0328
06-A-602

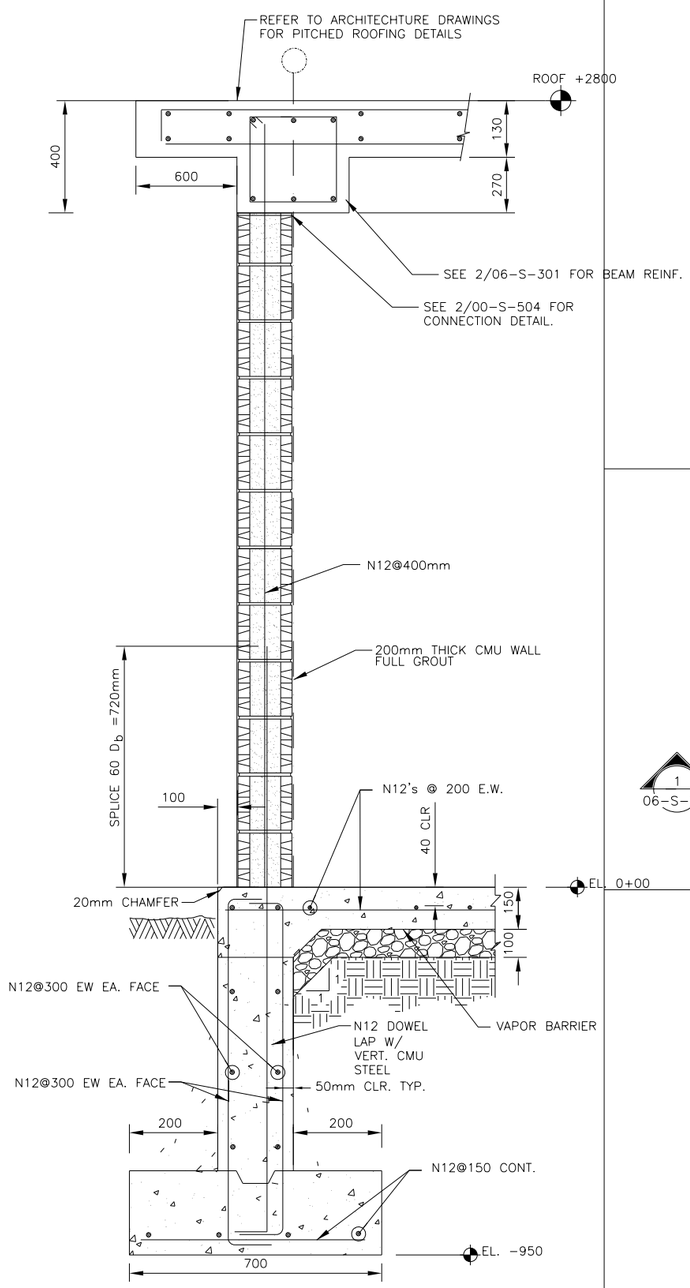

NOTE:
1. EXTEND HORIZONTAL STEM WALL STEEL INTO COLUMNS. PROVIDE 90° HOOKS.

A SECTION
06-S-101 SCALE: NTS

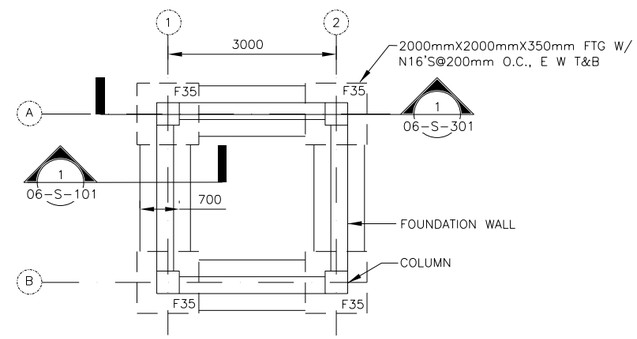

A FOUNDATION PLAN
SCALE: 1:50

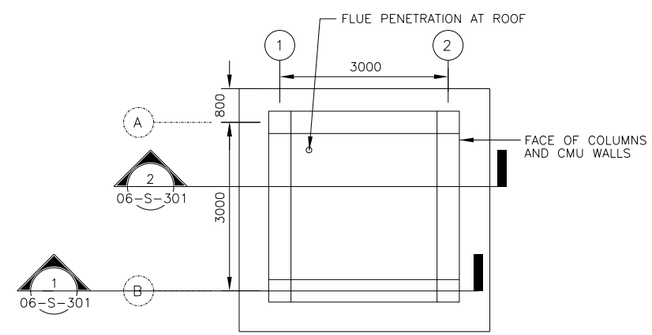

B ROOF FRAMING PLAN
SCALE: 1:50

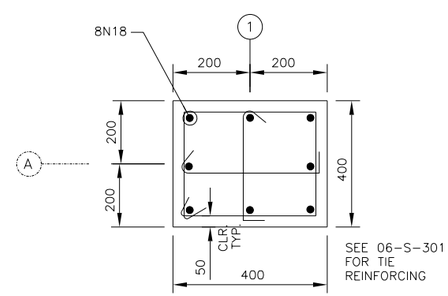

B COLUMN (TYP.)
06-S-101 SCALE: NTS

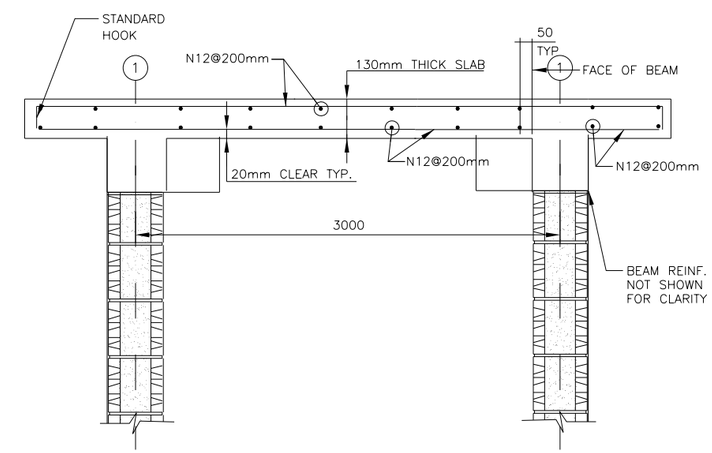

C ROOF SLAB DETAIL
06-S-101 SCALE: NTS

KEY NOTES:

1. 150 MM THICK SLAB

FOUNDATION PLAN NOTES:
1. REFER TO STRUCTURAL SHEET SERIES 00-S-XXX FOR ADDITIONAL NOTES & STRUCTURAL DETAILS.
2. FINISHED FLOOR ELEV. SHALL BE @ DATUM ELEV. 0+00.

ROOF PLAN NOTES:
1. REFER TO STRUCTURAL GENERAL NOTES ON SHEET 00-S-001 FOR ADDITIONAL INFORMATION.
2. CONTRACTOR SHALL COORDINATE THE INSTALLATION OF THE COLD FORMED METAL ROOF/TRUSS SYSTEM W/ARCHITECTURAL DRAWINGS 06-A-104 & 06-A-101.

REV	DATE	BY	SUB	APP	DESCRIPTION
0	06/30/10				SITE ADAPT CONSTRUCTION PLANS

DESIGNED BY: D. STEGMEIR
DRAWN: M. LORENZ
CHECKED: M. GARVER
IN CHARGE: D. WHEELER
DATE: 30 JUNE 2010

AFGHAN NATIONAL SECURITY FORCE COMPREHENSIVE PLAN FOR FACILITIES DEVELOPMENT

MINISTRY OF INTERIOR (MoI) – AFGHAN NATIONAL POLICE PROVINCIAL FIRE STATION – TYPE-B

GUARD SHACK FOUND. PLAN ROOF FRAMING PLAN, DTLS & SCHDS

SCALE: AS SHOWN

PROJECT NO. 6151-08-0328

06-S-101

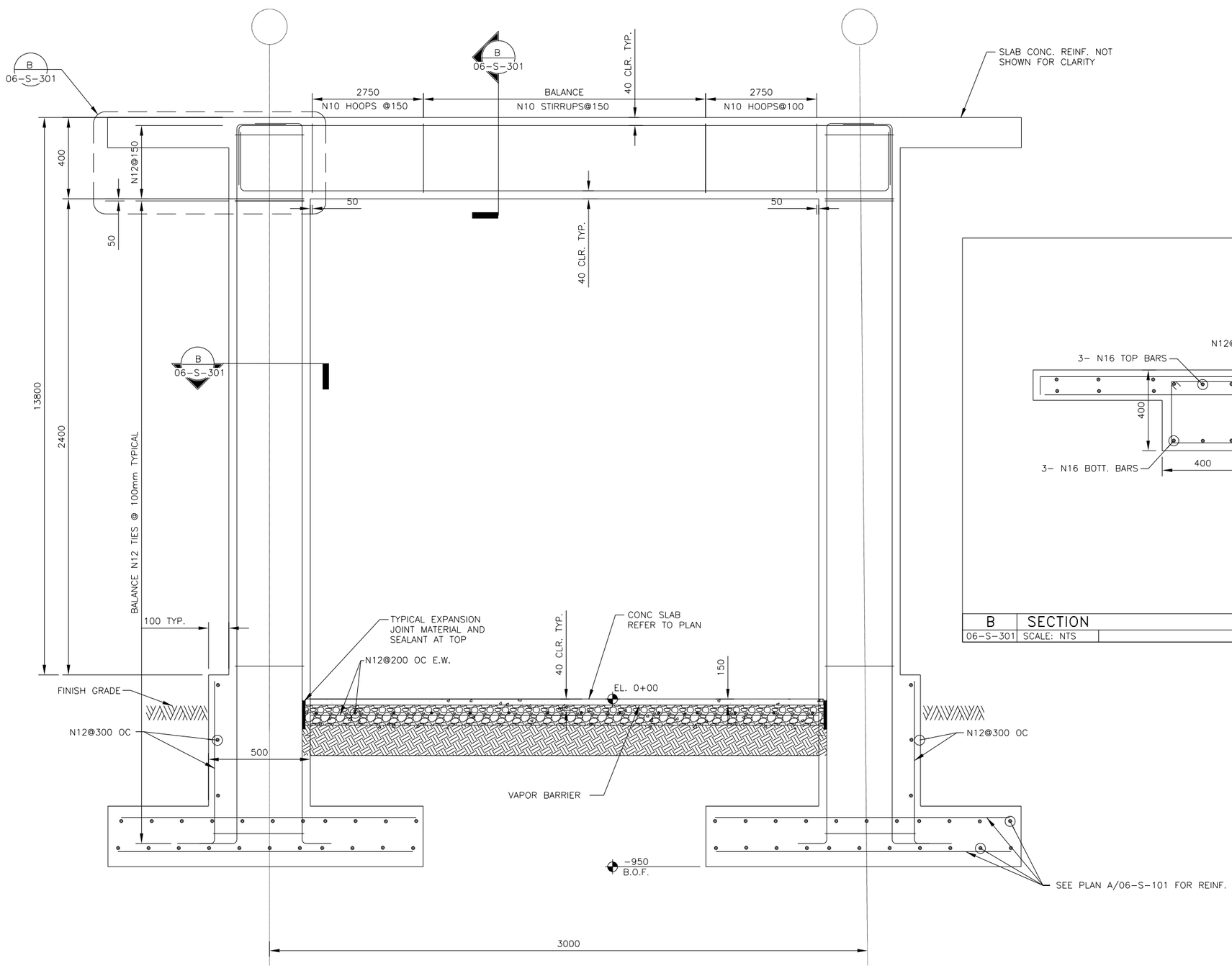

A SECTION
06-S-301 SCALE: NTS

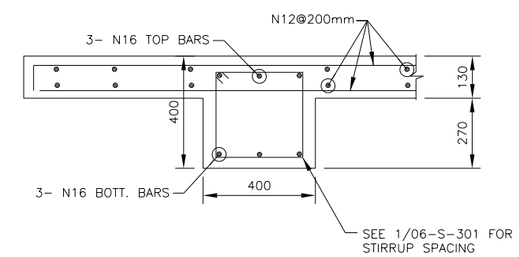

B SECTION
06-S-301 SCALE: NTS

REV	DATE	BY	SUB	APP	DESCRIPTION
0	06/30/10				SITE ADAPT CONSTRUCTION PLANS

DESIGNED BY: D. STROMEIR
DRAWN: M. LORENZ
CHECKED: M. GARVER
IN CHARGE: D. WHEELER
DATE: 30 JUNE 2010

AFGHAN NATIONAL SECURITY FORCE
COMPREHENSIVE PLAN FOR FACILITIES DEVELOPMENT

MINISTRY OF INTERIOR (MoI) - AFGHAN NATIONAL POLICE
PROVINCIAL FIRE STATION - TYPE-B

GUARD SHACK SECTION OF FRAME-A

SCALE: AS SHOWN

PROJECT NO. 6151-08-0328

06-S-301

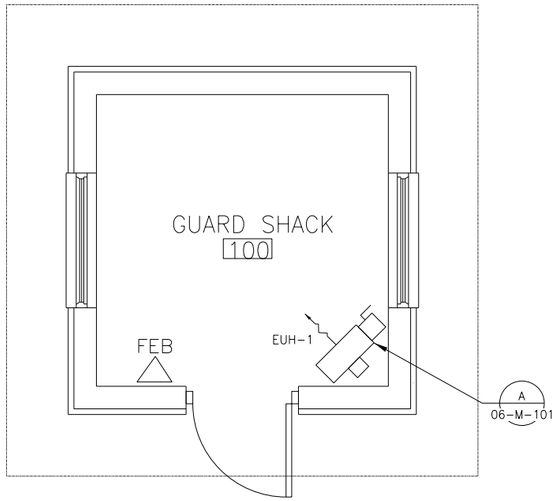

1 GUARD SHACK HVAC PLAN
06-M-101 1:25

ELECTRIC UNIT HEATER SCHEDULE

NO.	BASIS OF DESIGN	VOLTAGE (V)	PHASE	NOMINAL WATTAGE (Kw)	BTU/hr	TOTAL CURRENT (A)	AIR DELIVERY		AIR TEMPERATURE RISE		REMARKS
							CFM	l/s	°F	°C	
EUH-1	RUFFNECK FE1	380	3	2.5	8,550	3.8	400	189	14.3	7.9	1

REMARKS:
1. PROVIDE WITH UNIT MOUNTED, FACTORY INSTALLED STARTER, DISCONNECT, AND THERMOSTAT.

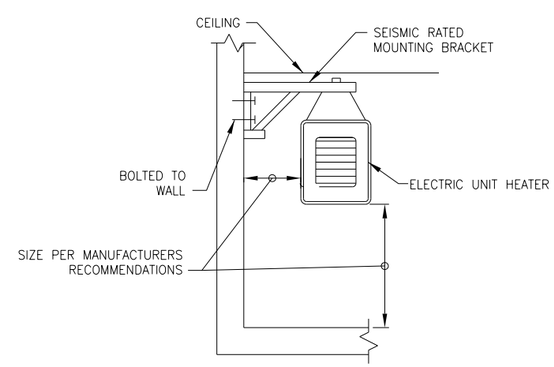

A ELECTRIC UNIT HEATER DETAIL
06-M-101 N.T.S.

REV	DATE	BY	SUB/APP	DESCRIPTION
0	06/30/10			SITE ADAPT CONSTRUCTION PLANS

DESIGNED W. FLEISHER
DRAWN C. JUNG
CHECKED J. MARIANETTI
IN CHARGE D. WHEELER
DATE 30 JUNE 2010

AFGHAN NATIONAL SECURITY FORCE
COMPREHENSIVE PLAN FOR FACILITIES DEVELOPMENT
MINISTRY OF INTERIOR (MoI) – AFGHAN NATIONAL POLICE
PROVINCIAL FIRE STATION – TYPE-B
GUARD SHACK MECHANICAL (HVAC) PLAN

SCALE AS SHOWN
PROJECT NO. 6151-08-0328
06-M-101

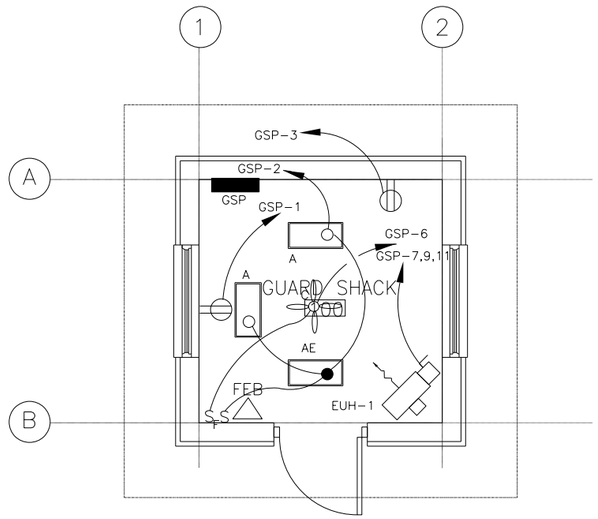

0 300 600 1200

SCALE: 1:50

1 GUARD SHACK ELECTRICAL PLAN

06-E-101 SCALE : 1:30

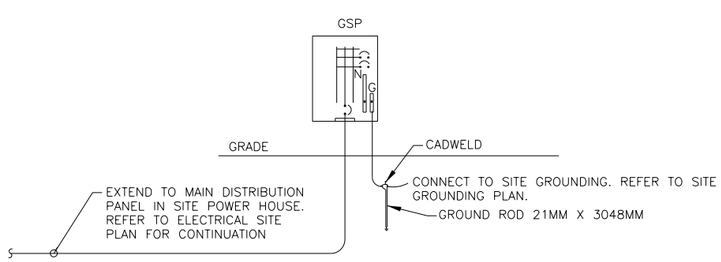

A POWER RISER DIAGRAM

06-E-101 SCALE :N.T.S

GENERAL NOTES:

1. SEE SHEET 00-E-001 AND 00-E-002 FOR LEGEND, ABBREVIATIONS AND GENERAL NOTES.
2. ELECTRIC UNIT HEATER DISCONNECT SWITCH PROVIDED BY MECHANICAL.
3. COORDINATE MECHANICAL EQUIPMENT WITH MECHANICAL DRAWINGS.
4. ALL EXPOSED INTERIOR CONDUITS SHALL BE RGS THREADED (TYPICAL FOR INTERIORS).
5. PANEL BOARD GSP SHALL BE SUITABLE FOR USE AS SERVICE EQUIPMENT WITH NEMA 1R ENCLOSURE.

PANEL GSP TYPE MAIN BREAKER K.A.I.C 18,000 MIN. MOUNTING SURFACE

VOLTAGE 380/220V,3ø,4W MAINS 60 AMPS ENTRY BOTTOM LOCATION GUARD SHACK

POLE	TRIP	CONDUCTORS IN MM²	CONDUIT	DESIGNATION	KVA	NO	PHASE øB	PHASE øB	PHASE øC	NO	KVA	DESIGNATION	CONDUIT	CONDUCTORS IN MM²	TRIP	POLE
1	20A	2#4+#4GND	21MM	RECEPTACLES	.18	1	.48			2	0.3	LIGHTS	21MM	2#4+#4GND	20A	1
1	20A	2#4+#4GND	21MM	RECEPTACLES	.18	3		.18		4		SPARE			20A	1
1	20A	2#4+#4GND	21MM	GATE LIGHTING	.8	5			0.9	6	0.1	CEILING FAN	21MM	2#4+#4GND	20A	1
3	20A	3#4+#4GND	21MM	EUH-1	.85	7	.85			8		SPARE			20A	1
					.85	9		.85		10		SPARE			20A	1
					.85	11			.85	12		SPARE			20A	1
1	20A			SPARE		13				14		SPARE			20A	1
						15				16						
						17				18						
						19				20						
						21				22						
						23				24						
						25				26						
						27				28						
						29				30						
					TOTAL:		1.3	1.0	1.8	4.1 KVA /.66 X 1.25 =7.8 AMPS USE 60 AMP PANEL						

LIGHTING FIXTURE SCHEDULE

MARK	LAMPS	VOLTAGE	FIXTURE DISCRIPTION	MOUNTING	NOTES
A	3-T832W	220	SURFACE MOUNTED FLUORESCENT WRAP AROUND WITH ACRYLIC LENS WITH HPF ELECTRONIC BALLAST	SURFACE	
AE	3-T832W	220	SURFACE MOUNTED FLUORESCENT WRAP AROUND WITH ACRYLIC LENS WITH HPF ELECTRONIC BALLAST AND EMERGENCY BATTERY BACKUP	SURFACE	
C		220	CEILING FAN PROVIDED BY MECHANICAL CONNECTED BY ELECTRICAL		

REV	DATE	BY	SUB	APP	DESCRIPTION
0	06/30/10				SITE ADAPT CONSTRUCTION PLANS

DESIGNED J. OLIMER
DRAWN L. KRAVCHUK
CHECKED B. CRAWFORD
IN CHARGE D. WHEELER
DATE 30 JUNE 2010

AFGHAN NATIONAL SECURITY FORCE COMPREHENSIVE PLAN FOR FACILITIES DEVELOPMENT

MINISTRY OF INTERIOR (MoI) - AFGHAN NATIONAL POLICE PROVINCIAL FIRE STATION - TYPE-B

GUARD SHACK ELECTRICAL PLANS, SCHEDULES & DETAILS

SCALE AS SHOWN

PROJECT NO. 6151-08-0328

06-E-101

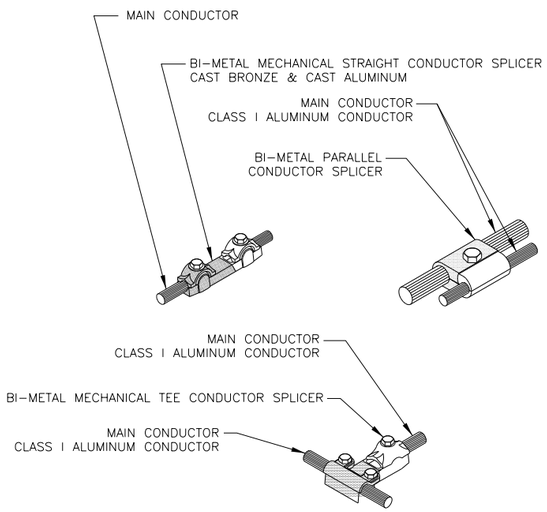

A BI-METAL CABLE CLAMPS AND SPLICERS

06-E-102 NOT TO SCALE

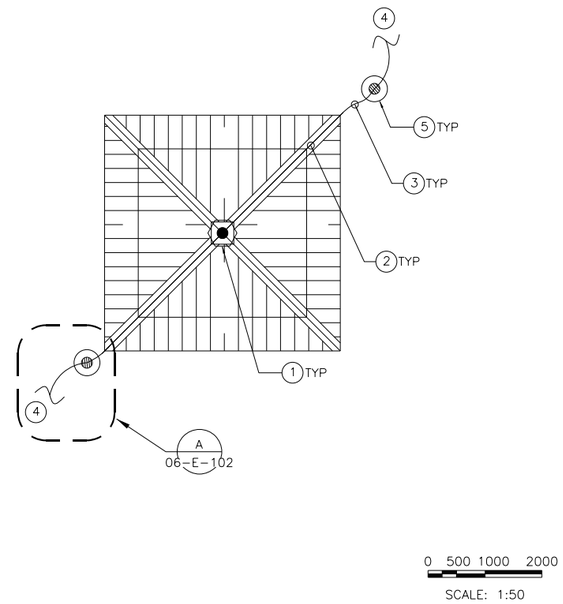

1 GUARD SHACK ROOF PLAN LIGHTNING PROTECTION SYSTEM

06-E-102 SCALE : 1:50

GENERAL NOTES:

1. SEE SHEET 00-E-001 AND 00-E-002 FOR LEGEND, ABBREVIATIONS AND GENERAL NOTES.
2. CLASS I COMPONENTS SHALL APPLY FOR THE GUARD SHACK BUILDING, HEIGHT IS NOT MORE THAN 23M (75 FEET).
3. ALL LIGHTNING PROTECTION CONDUCTORS SHALL BE FASTENED NOT MORE THAN 914.4MM (3 FEET) MAXIMUM SPACING.
4. CONDUCTORS SHALL INTERCONNECT ALL AIR TERMINALS AND SHALL FORM A TWO-WAY PATH FROM EACH AIR TERMINAL HORIZONTALLY OR DOWNWARD TO CONNECTORS WITH GROUND RODS.
5. THE INSTALLATION OF THE LIGHTNING PROTECTION SYSTEM SHALL MEET THE REQUIREMENTS OF NATIONAL FIRE PROTECTION ASSOCIATION 780 AND UNDER WRITERS LAB UL96/96A.
6. AIR TERMINALS SHALL NOT BE LESS THAN 254 MM (10 INCHES) LONG ABOVE THE OBJECT TO BE PROTECTED WHEN THE INTERVAL BETWEEN AIR TERMINALS IS NOT MORE THAN 6 METERS (20 FEET).
7. AIR TERMINALS SHALL BE PLACED ON ALL CHIMNEYS, VENTS, AND ROOF TOP METAL BODIES WHEN SUCH CHIMNEYS, VENTS OR ROOF TOP METAL BODIES ARE NOT WITHIN A ZONE OF PROTECTION.
8. AT LEAST TWO DOWN CONDUCTORS SHALL BE INSTALLED.
9. RADIUS OF BEND SHALL NOT BE LESS THAN 203 MM (8 INCHES).
10. PROVIDE #70MM² (#2/0 AWG) COPPER GROUNDING CONDUCTORS FOR THE LIGHTNING PROTECTION GROUNDING. ALL EXTERIOR GROUNDING CONDUCTORS SHALL BE BURIED A MINIMUM OF 762MM (30") BELOW GRADE OR 152.4MM (6") BELOW FROST LINE, WHICHEVER IS GREATER.

KEY NOTES:

1. AIR TERMINAL SHALL BE 12.7MM X 452MM (1/2" X 18") ALUMINUM, 90 DEGREES VERTICAL. SEE DETAIL B/06-E-102.
2. MAIN CONDUCTORS SHALL BE (28 STRAND, 14 GAUGE CLASS 1 ALUMINUM ROOF CABLE, 58.9 KG/304.8M (130 POUNDS/1000 FEET), 15.875 MM DIAMETER, 70 MM² (#1/0)).
3. ALUMINUM DOWN CONDUCTORS SHALL BE CONNECTED TO COPPER DOWN CONDUCTOR AT LEAST 457MM (18 INCHES) ABOVE GRADE LEVEL. BIMETALLIC CONNECTORS WILL BE USED. SEE DETAILS ON THIS SHEET FOR BI-METALLIC CONNECTORS.
4. SEE SHEET 00-E-102 FOR CONTINUATION TO SITE GROUNDING PLAN.
5. PROVIDE AND INSTALL 19MMX3048MM (3/4" X 10'-0") COPPER CLAD STEEL GROUND RODS. IF ROCK IS ENCOUNTERED, GROUND ROD MAY BE INSTALLED WITH A MAXIMUM VARIATION OF 30 DEGREES FROM VERTICAL.

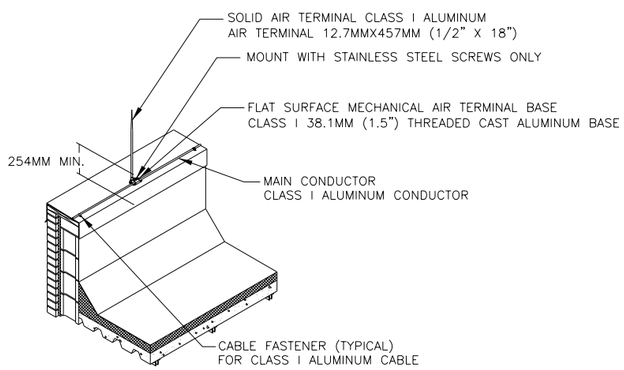

B AIR TERMINAL DETAIL

06-E-102 NOT TO SCALE

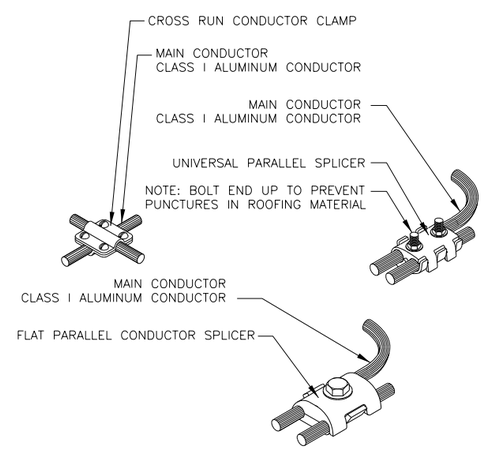

C CABLE CLAMPS AND SPLICERS

06-E-102 NOT TO SCALE

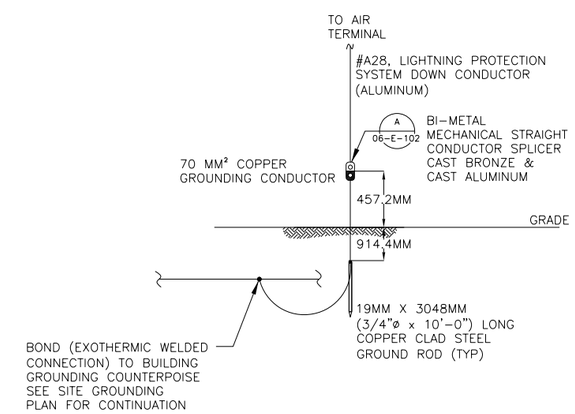

D BONDING LIGHTNING PROTECTION TO GROUNDING

06-E-102 NOT TO SCALE

REV	DATE	BY	SUB	APP	DESCRIPTION
0	06/30/10				SITE ADAPT CONSTRUCTION PLANS

DESIGNED: M. ASHKAR/ANOUS
DRAWN: L. KRAVCHUK
CHECKED: B. CRAWFORD
IN CHARGE: D. WHEELER
DATE: 30 JUNE 2010

AFGHAN NATIONAL SECURITY FORCE
COMPREHENSIVE PLAN FOR
FACILITIES DEVELOPMENT

MINISTRY OF INTERIOR (MoI) - AFGHAN NATIONAL POLICE
PROVINCIAL FIRE STATION - TYPE-B

GUARD SHACK LIGHTNING PROTECTION PLAN

SCALE: AS SHOWN

PROJECT NO. 6151-08-0328

06-E-102

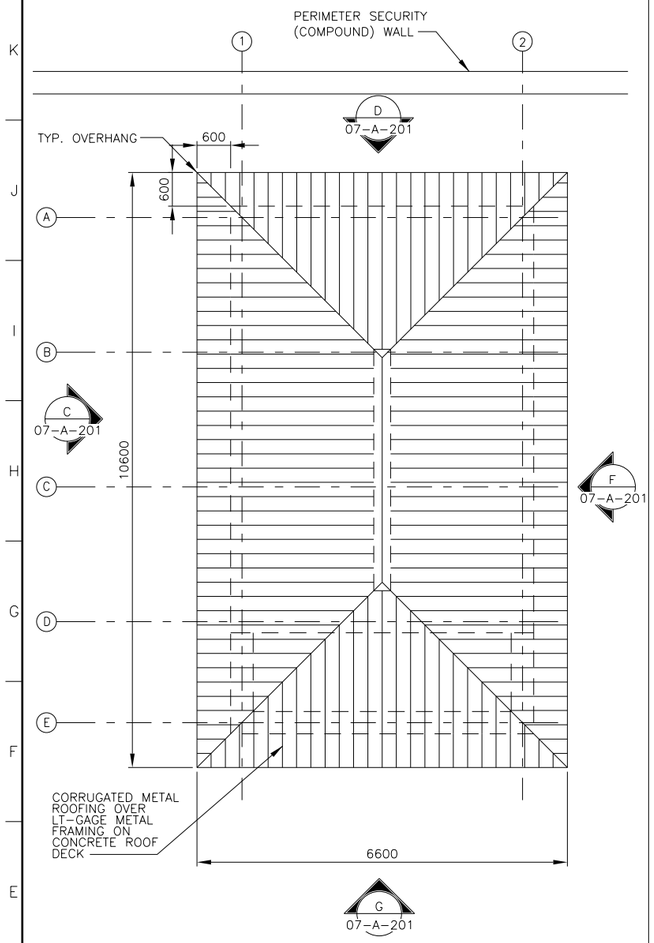

2 ROOF PLAN

07-A-101 SCALE 1:50

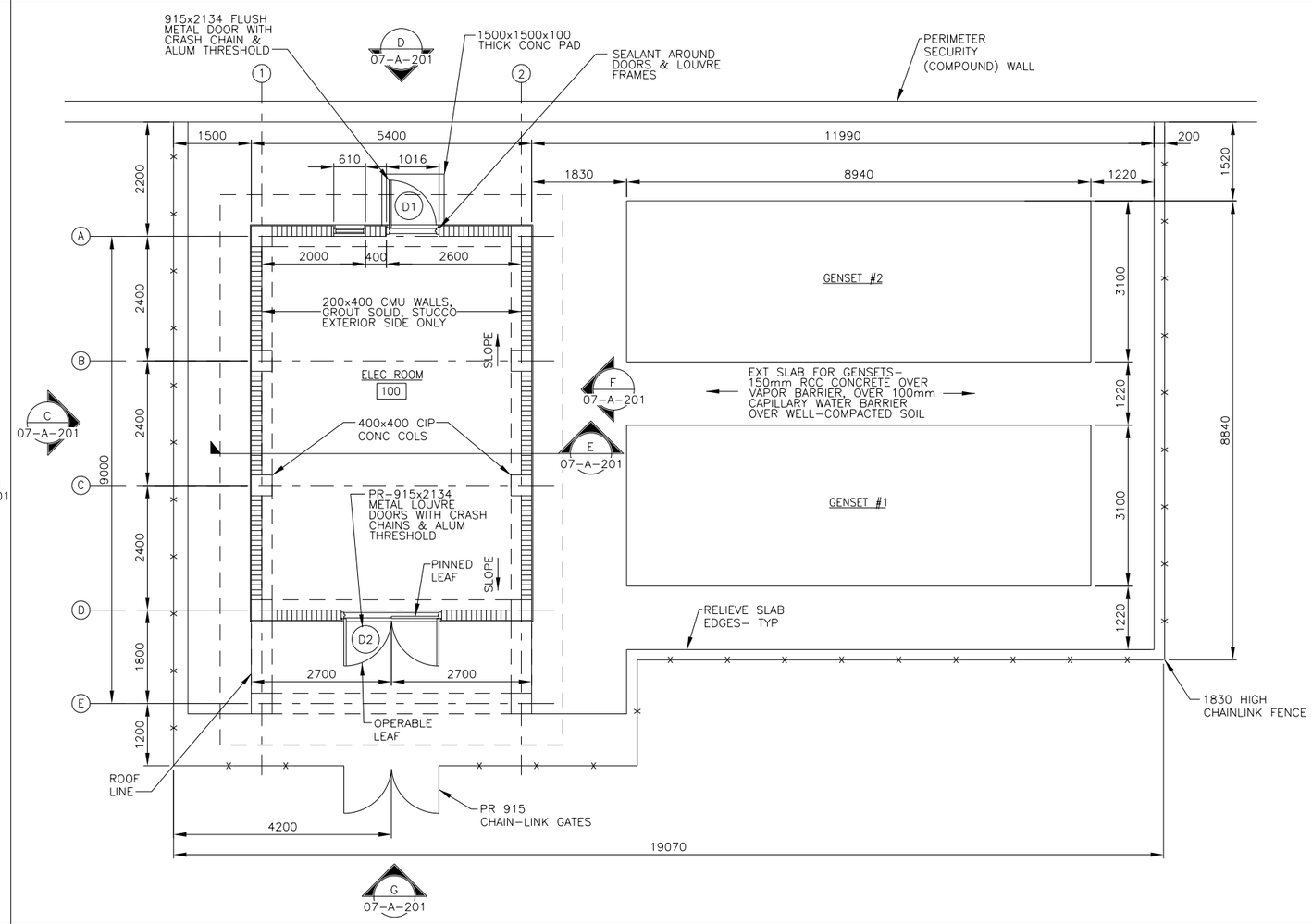

1 ELECTRICAL ROOM FLOOR PLAN & GENERATOR PLACEMENT PLAN

07-A-101 SCALE 1:50

GENERAL NOTES:

1. SEE FINISH SCHEDULE FOR WALL FINISHES.
2. SURFACES TO BE PAINTED SHALL BE CLEAN & FREE OF FOREIGN MATTER BEFORE APPLICATION OF PAINT. CLEANING SHALL BE SCHEDULED SO THAT DUST & OTHER CONTAMINANTS WILL NOT FALL ON WET, NEWLY -PAINTED SURFACES.
3. CONCRETE, & INTERIOR MASONRY WHOSE CELLS HAVE BEEN GROUTED SOLID, SHALL CURE MIN 30 DAYS PRIOR TO PAINTING.
4. PAINTS CONTAINING LEAD IN EXCESS OF 0.6 PERCENT BY WEIGHT OF THE TOTAL NON-VOLATILE CONTENT SHALL NOT BE USED.
5. MERCURIAL FUNGICIDES SHALL NOT BE USED IN OIL-BASE PAINT.
6. REMOVE LOOSE DIRT & CLEAN SURFACES PRIOR TO PAINTING. APPLY PAINT TO INTERIOR STRUCTURAL RIGID FRAMES & CEILINGS & TEST FOR ADHESION. EXTERIOR MASONRY SHALL RECEIVE PRIMER COAT OF ACRYLIC LATEX & TOP COAT OF WATER-REPELLENT ACRYLIC LATEX.
7. DIMENSIONS ARE TO EDGE OF MASONRY OPENINGS.
8. CRUSHED GRAVEL THROUGH OUT INSIDE OF FENCE.
9. ELECTRICAL ROOM SLAB - 120mm RCC CONCRETE OVER VAPOR BARRIER, OVER 100mm CAPILLARY WATER BARRIER OVER WELL-COMPACTED SOIL

REV	DATE	BY	SUB	APP	DESCRIPTION
0	06/30/10				SITE ADAPT CONSTRUCTION PLANS

DESIGNED N. SPANIC
DRAWN C. JUNG
CHECKED J. ANDERSON
IN CHARGE D. WHEELER
DATE 30 JUNE 2010

AFGHAN NATIONAL SECURITY FORCE COMPREHENSIVE PLAN FOR FACILITIES DEVELOPMENT

MINISTRY OF INTERIOR (MoI) - AFGHAN NATIONAL POLICE PROVINCIAL FIRE STATION - TYPE-B

SITE POWER HOUSE FLOOR PLAN, ROOF PLAN & GENERAL NOTES

SCALE AS SHOWN

PROJECT NO. 6151-08-0328

07-A-101

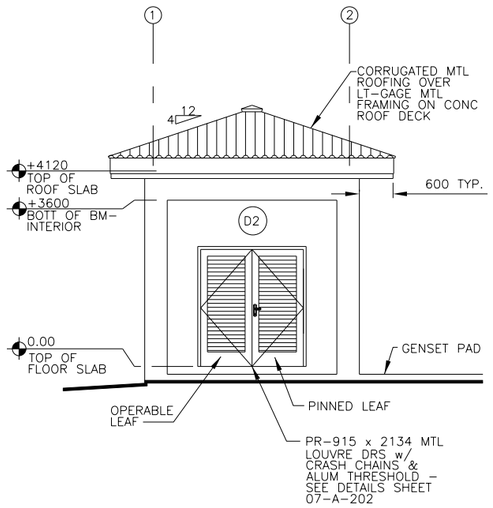

G | SITE POWER HOUSE FRONT ELEVATION
07-A-201 | 1:50

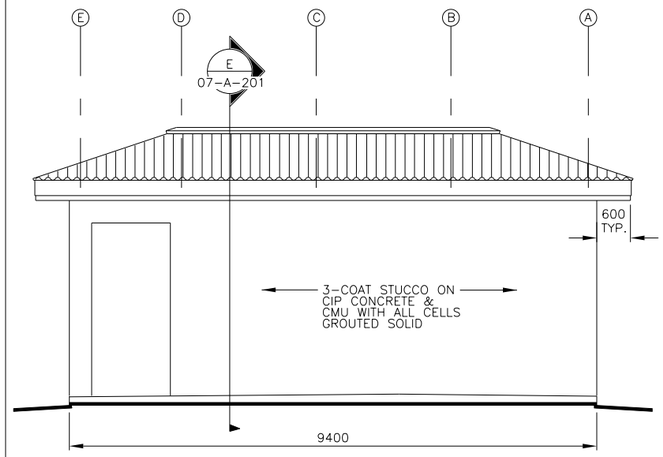

F | SITE POWER HOUSE RIGHT SIDE ELEVATION
07-A-201 | 1:50

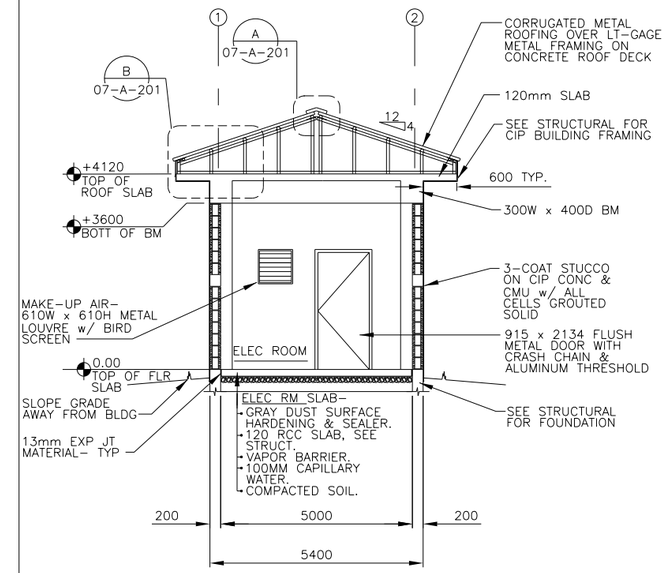

E | SITE POWER HOUSE BUILDING SECTION
07-A-201 | N.T.S.

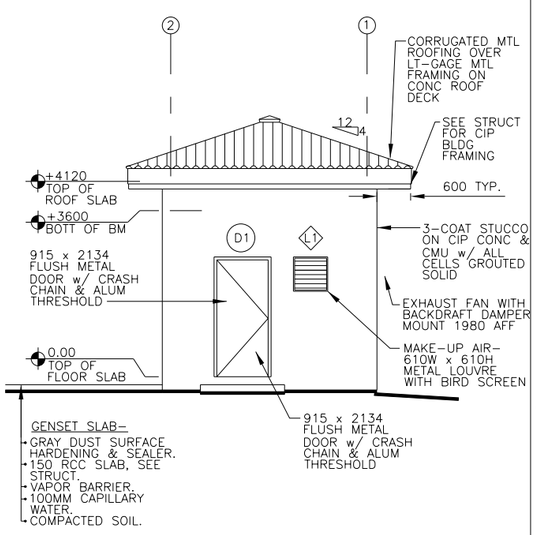

D | SITE POWER HOUSE REAR ELEVATION
07-A-201 | 1:50

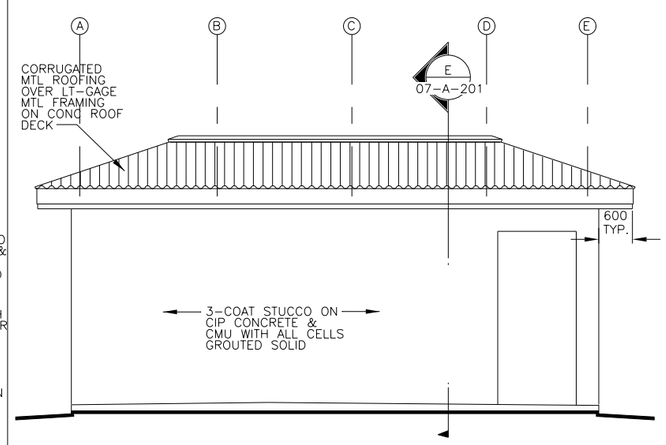

C | SITE POWER HOUSE LEFT SIDE ELEVATION
07-A-201 | 1:50

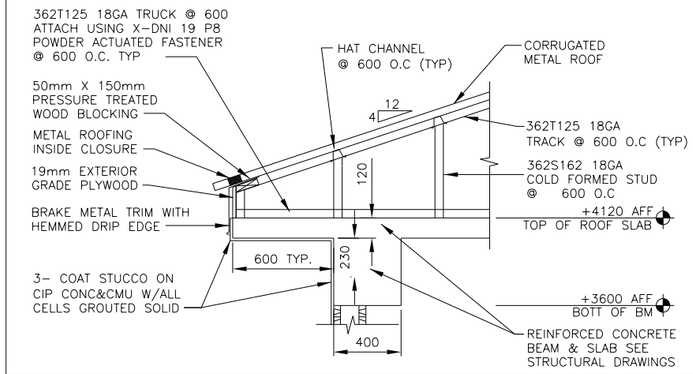

B | ROOF FRAMING DETAIL - EAVE
07-A-201 | N.T.S.

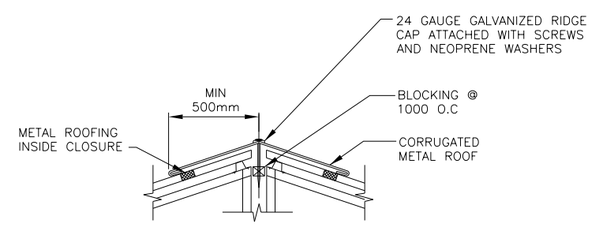

A | ROOF FRAMING DETAIL - RIDGE
07-A-201 | N.T.S.

REV	DATE	BY	SUB	APP	DESCRIPTION
0	06/30/10				SITE ADAPT CONSTRUCTION PLANS

DESIGNED N. SPANIC
DRAWN C. JUNG
CHECKED J. ANDERSON
IN CHARGE D. WHEELER
DATE 30 JUNE 2010

AFGHAN NATIONAL SECURITY FORCE COMPREHENSIVE PLAN FOR FACILITIES DEVELOPMENT

MINISTRY OF INTERIOR (MoI) - AFGHAN NATIONAL POLICE PROVINCIAL FIRE STATION - TYPE-B

SITE POWER HOUSE ELEVATIONS, SECTIONS & DETAILS

SCALE AS SHOWN

PROJECT NO. 6151-08-0328

07-A-201

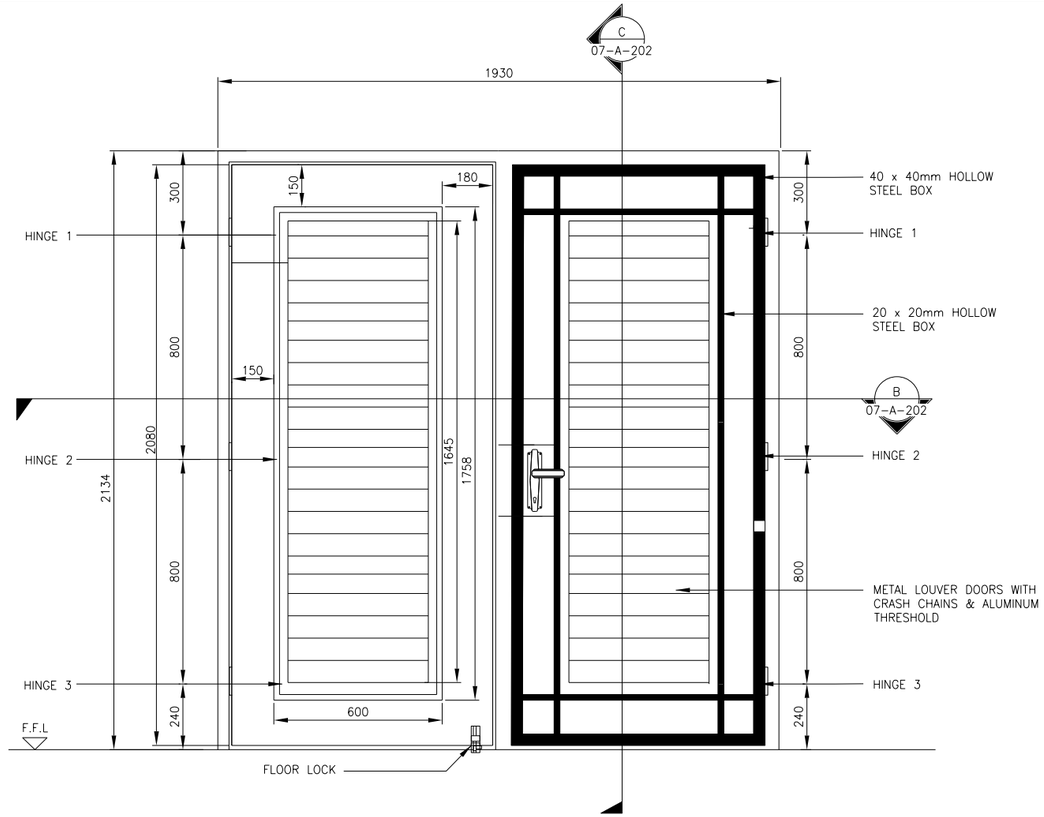

D DOOR ELEVATION D2

07-A-202 1:10

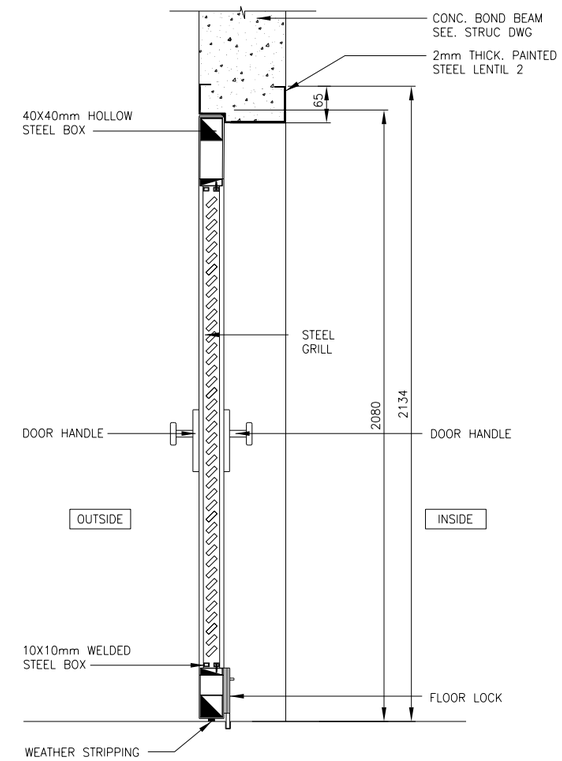

C DOOR SECTION

07-A-202 1:10

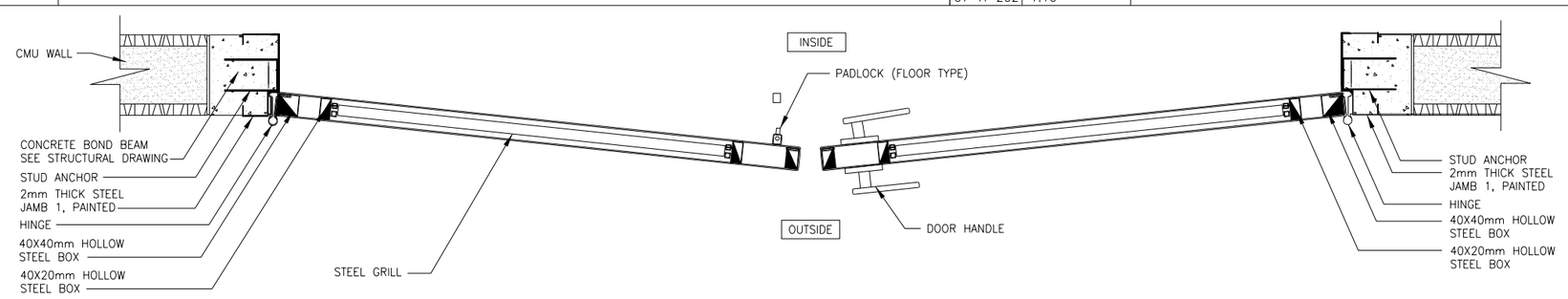

B DOOR PLAN

07-A-202 1:10

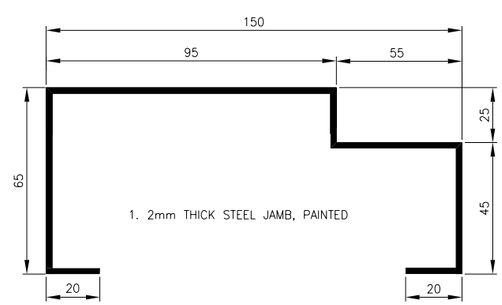

A DOOR DETAIL

07-A-202 SCALE N.T.S.

REV	DATE	BY	SUB/APP	DESCRIPTION
0	06/30/10			SITE ADAPT CONSTRUCTION PLANS

DESIGNED N. SAHIC
DRAWN C. JUNG
CHECKED J. ANDERSON
IN CHARGE D. WHEELER
DATE 30 JUNE 2010

AFGHAN NATIONAL SECURITY FORCE COMPREHENSIVE PLAN FOR FACILITIES DEVELOPMENT

MINISTRY OF INTERIOR (MoI) – AFGHAN NATIONAL POLICE PROVINCIAL FIRE STATION – TYPE-B

SITE POWER HOUSE DOOR ELEVATION & SECTION

SCALE AS SHOWN

PROJECT NO. 6151-08-0328

07-A-202

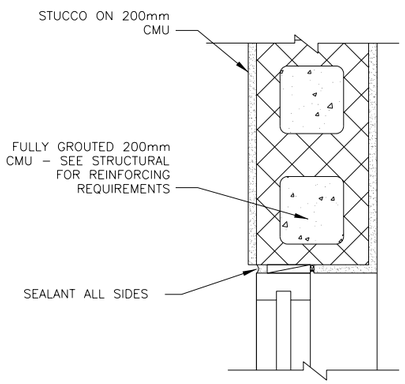

F LOUVER JAMB
07–A–501 SCALE: N.T.S.

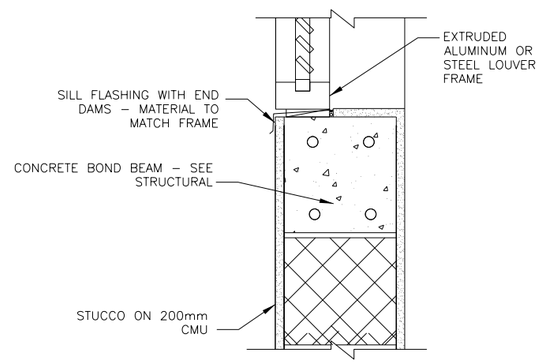

E LOUVER SILL
07–A–501 SCALE: N.T.S.

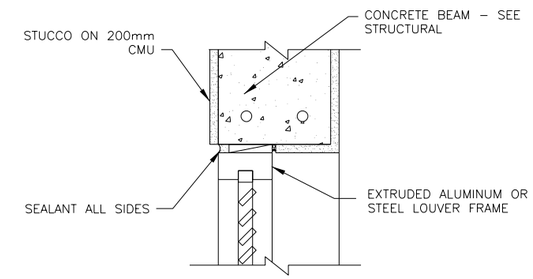

LOUVER TYPE NOTES:

1. LOUVER FRAME SHOULD BE EXTRUDED ALUMINUM OR STEEL.

D LOUVER HEADER
07–A–501 SCALE: N.T.S.

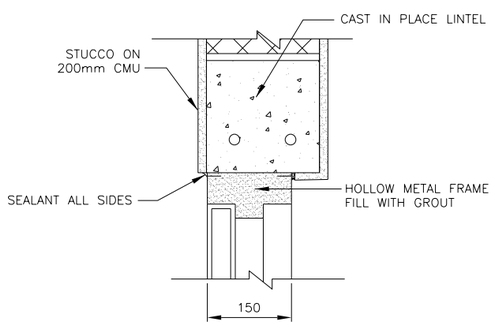

C EXTERIOR DOOR HEADER DETAIL
07–A–501 SCALE: N.T.S.

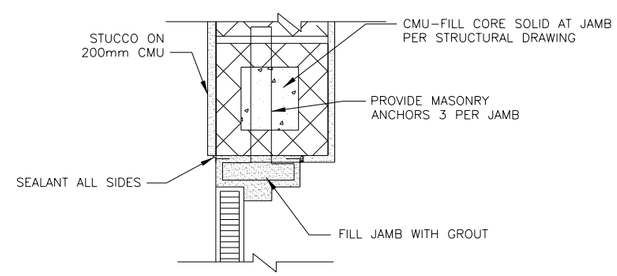

B EXTERIOR DOOR JAMB
07–A–501 SCALE: N.T.S.

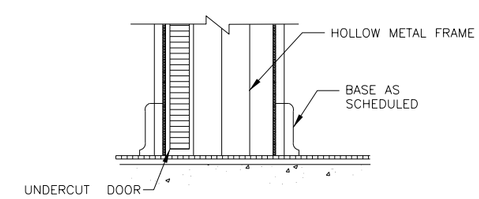

A EXTERIOR DOOR THRESHOLD
07–A–501 SCALE: N.T.S.

REV	DATE	BY	SUB/APP	DESCRIPTION
0	06/30/10			SITE ADAPT CONSTRUCTION PLANS

DESIGNED N. SPAHIC
DRAWN C. JUNG
CHECKED J. ANDERSON
IN CHARGE D. WHEELER
DATE 30 JUNE 2010

AFGHAN NATIONAL SECURITY FORCE COMPREHENSIVE PLAN FOR FACILITIES DEVELOPMENT

MINISTRY OF INTERIOR (MoI) – AFGHAN NATIONAL POLICE PROVINCIAL FIRE STATION – TYPE–B

SITE POWER HOUSE DOOR & WINDOW DETAILS

SCALE AS SHOWN

PROJECT NO. 6151–08–0328

07–A–501

DOOR SCHEDULE

DOOR No.	DIMENSION WIDTH	DIMENSION HGT.	DIMENSION THK.	DOOR TYPE	DOOR MAT.	FRAME MAT.	HARDWARE	THRESHOLD	FIRE RATED	MATERIAL
D1	914	2150	45	1	MTL	HM	HW–X	ALUM	–	METAL DOOR WITH STRIPPING
D2	PR914	2150	45	2	MTL	HM	HW–X	ALUM	–	METAL DOOR WITH STRIPPING AND LOUVER

LOUVER SCHEDULE

WINDOW NUMBER	DIMENSION WIDTH	DIMENSION HEIGHT	LOUVER MAT.	LOUVER TYPE		DESCRIPTION
L1	610	610	ALUM	1		METAL LOUVER WEATHER RESISTANT WITH BIRD SCREEN

HARDWARE NOTES:

HW–1
1–1/2 PR HINGES
1 EA LOCKSET F04, OFFICE DOOR LOCK W/LEVERS, GRADE 1
1 EA THRESHOLD, J32130
1 SET WEATHERSEALS
1 SET SILENCERS

HW–2
1–1/2 PR HINGES
1 EA LOCKSET F02, PRIVACY LOCK W/LEVERS, GRADE 1
1 SET SILENCERS

DOOR TYPE NOTES:

1. EXTERIOR DOOR, INCLUDING GLAZING, SHALL MEET THE REQUIREMENTS OF UL752, LEVEL 5 RESISTANCE FOR PROTECTION AGAINST AK–47 FIRE.
2. DOORS AND FRAME COLORS SHALL MATCH ADJACENT WALL COLORS AS SELECTED BY THE CONTRACTING OFFICE.
3. HARDWARE SHALL BE HEAVY DUTY. COMMERCIAL GRADE, STAINLESS STEEL WITH A MATTE FINISH. THERE SHALL BE THREE HINGES AT EACH DOOR, AT LEAST 200/16/5MM, WITH BALL BERING , SECURED BY THREADED PINS.
4. FRAMES SHALL BE MOUNTED AND ADJUSTED IN ACCORDANCE WITH MANUFACTURER'S INSTRUCTIONS. FRAMES SHALL BE FASTENED WITH MINIMUM OF THREE FASTENING POINTS PER SIDE AT REGULAR INTERVALS.
5. ALL DOOR FRAMES SHALL BE FITTED WITH DOOR SILENCERS.
6. DIMENSIONS SHOWN ON DOOR SCHEDULE ARE BASED UPON MODULAR MASONRY (OR ROUGH OPENING), HEIGHT OF 2200MM FOR STANDARD PERSONAL DOORS. CONTRACTOR SHALL COORDINATE WITH DOOR SUPPLIER TO ENSURE THAT DIMENSIONS OF DOORS AND FRAMES PROVIDED ARE COMPATIBLE WITH DOOR OPENING DIMENSIONS.
7. ALL DOOR LOCKS SHALL MORTISED.
8. LOCK FUNCTION F04–OFFICE DOOR LOCK– LATCH BOLT OPERATED BY LEVER FROM EITHER SIDE EXCEPT WHEN OUTSIDE LEVER IS MADE INOPERATIVE BY A STOP OR MECHANICAL MEANS OTHER THAN A KEY. WHEN OUTSIDE LEVER IS LOCKED, LATCH BOLT MAY BE RETRACTED BY KEY FROM OUTSIDE OR BY ROTATING INSIDE LEVER.
9. LOCK FUNCTION F02– PRIVACY LOCK–LATCH BOLT OPERATED BY LEVER EITHER SIDE. DEADBOLT OPERATED BY TURN FROM INSIDE AND BY EMERGENCY KEY FROM OUTSIDE.

NOTES:

1. FOR HARDWARE SET DESCRIPTION SEE SPECIFICATIONS SECTION 08710 PARAGRAPH 3.5.
2. CONTRACTOR TO USE LOCALLY FABRICATED DOORS AND WINDOWS.

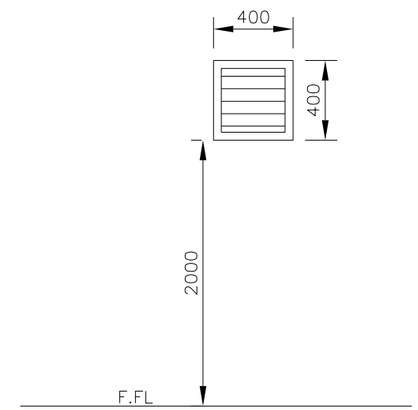

D LOUVER
07–A–601 SCALE 1:30

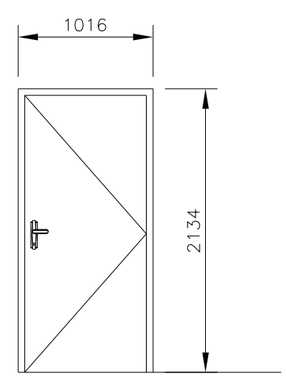

B DOOR – D1
07–A–601 SCALE 1:30

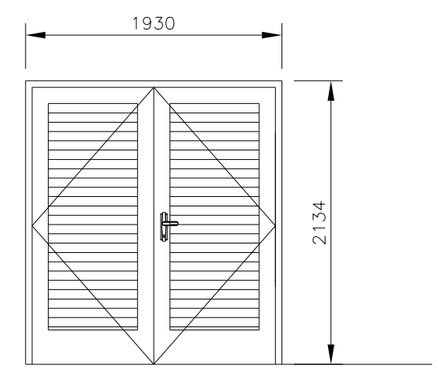

A DOOR – D2
07–A–601 SCALE 1:30

REV	DATE	BY	SUB	APP	DESCRIPTION
0	06/30/10				SITE ADAPT CONSTRUCTION PLANS

DESIGNED N. SPAHIC
DRAWN C. JUNG
CHECKED J. ANDERSON
IN CHARGE D. WHEELER
DATE 30 JUNE 2010

AFGHAN NATIONAL SECURITY FORCE COMPREHENSIVE PLAN FOR FACILITIES DEVELOPMENT

MINISTRY OF INTERIOR (MoI) – AFGHAN NATIONAL POLICE PROVINCIAL FIRE STATION – TYPE–B

SITE POWER HOUSE DOOR & LOUVER SCHEDULE

SCALE AS SHOWN

PROJECT NO. 6151–08–0328

07–A–601

ROOM FINISH SCHEDULE

ROOM NO.	ROOM NAME	FLOOR MATERIAL	BASE MATERIAL	WALL MATERIAL	WALL FINISH	CEILING MATERIAL	CEILING FINISH	CEILING HEIGHT	DOOR & WINDOW FINISH MATERIAL	DOOR & WINDOW FINISH FINISH	REMARKS
100	SITE POWER HOUSE	CONC/S	–	P	P–1	P	P–6	–	MTL	P–4	LOUVER WITH BIRD SCREEN

GENERAL FINISH NOTES/TYPICAL COLORS & MATERIAL SELECTION

FLOORING

CONC/S CONCRETE SEALED AND HARDENED WITH BROOM FINISH

TERRAZZO TILE (TT)
TT–1 AFGHAN LOCAL PRODUCT; 300mm X 300mm WITH SPECIAL POLISH

ENTRY MAT (MAT)
MAT–1 REESE PERFEC CLEAN ALUMINUM HINGE MAT; RECESSED FRAME WITH NO. 546 CARPET INSERTS, METAL FINISH: MIL ALUMINUM; CARPET INSERTS: MAUVE 8616

CERAMIC TILE (CT)
CT–1 R.A.K CERAMIC UAE; 300mm X 300mm UNPOLISHED PORCELAIN

CT–2 AFGHAN LOCAL PRODUCT; 300mm X 600mm POLISHED PORCELAIN

CT–3 AFGHAN LOCAL PRODUCT; 600mm X 1000mm UNPOLISHE PORCELAIN

CT–4 R.A.K CERAMIC UAE;#4/700RBEM–10 200mm X 200mm UNPOLISHE PORCELAIN

CT–5 R.A.K CERAMIC UAE;# 600CPAR–2 200mm X 300mm UNPOLISHE PORCELAIN

BASE TREATMENTS

MARBLE TILE (MT)
MT–1 AFGHAN LOCAL PRODUCT; 75mm X 100mm CROSS SHEEN PORCELAIN MARBLE TILE COVE BASE; #AXXX EMPRESS BLACK

WALL FINISHES

PAINT/EPOXY PAINT (P/EP):
P–1 BRIGHTO PAINTS; # 42 SAND STONE SUPER EMULSION

P–2 BRIGHTO PAINTS; # 127 CAMEO FOR EXTERNAL USE WEATHER SHIELD

P–3 BRIGHTO PAINTS; # X LATEX FOR WATER BASE WALL

P–4 BRIGHTO METALLIC ENAMEL; # 3 LIGHT GRAY SUITABLE FOR USE ON ALL TYPES OF INTERIOR AND EXTERIOR WOOD AND METAL SURFACES.

P–5 BRIGHTO METALLIC ENAMEL; # 42 ASH WHITE SUITABLE FOR USE ON ALL TYPES OF INTERIOR AND EXTERIOR WOOD AND METAL SURFACES.

P–6 BRIGHTO PAINTS; # 12 OFF WHITE

P–7 BRIGHTO PAINTS; #70 ROSE WHITE

P–8 BRIGHTO PAINTS; #69 LILY WHITE

P–9 BRIGHTO PAINTS; #40 PEACH CREAM

CERAMIC TILE (CT):
CT–4 R.A.K CERAMIC UAE;#4/700RBEM–10 200mm X 200mm UNPOLISHE PORCELAIN

CT–5 R.A.K CERAMIC UAE; # 600CPAR–2 200mm X 300mm UN–POLISHE

CEILING FINISHES

PAINTED CEILINGS (P)
P–1 BRIGHTO PAINT; # 12 OFF WHITE

MISCELLANEOUS SURFACES

LAMINATE SURFACES (LAM)
LAM–1 FORMICA; 953–58 ICE WHITE (BREAK ROOMS AND FMT COUNTERTOPS)
LAM–2 FORMICA; 7481–58 NATURAL BIRCH (BREAK ROOMS AND FMT– BASE AND UPPER CABINETS)
LAM–3 FORMICA; 1485–58 CHROME YELLOW (ELEVATOR)

TOILET PARTITIONS (TP)
NOT USED

SIGNAGE (S)
S–1 BACKGROUND COLOR: MATCH P–3, TEXT: WHITE

INTERIOR DOOR AND WINDOW FRAMES
P–4 BRIGHTO ; #3 LIGHT GRAY

INTERIOR WOOD DOORS AND TRIM
WHITE OAK, CLEAR FINISH, NO STAIN

MOVEABLE WALL (MW)
NOT USED

FINISH SCHEDULE ABBREVIATIONS

AFF	ABOVE FINISHED FLOOR	LAM	PLASTIC LAMINATE
ALSF	ALUMINUM STOREFRONT SYSTEM	MANUF	BY MANUFACTURER
ATC	ACOUSTIC TILE CEILING	MAT	ENTRY MAT
CB	CEMENT BOARD	MR	MOISTURE RESISTANT
CONC/S	CONCRETE SEALED AND HARDENED WITH BROOM FINISH	MTL	METAL PANEL
CPT	CARPET	MW	MOVABLE WALL
CT	CERAMIC TILE	NA	NOT APPLICABLE
EP	EPOXY PAINT	P	PAINT
EXPOSED	EXPOSED STRUCTURE	PREFIN	PREFINISHED
GN	GENERAL NOTE	RB	RESILIENT BASE
GWB	GYPSUM WALL BOARD	RBP	RACQUETBALL PANEL
HM	HOLLOW METAL	VCT	VINYL COMPOSITION TILE
		MT	MARBLE TILE
		MTD	METALLIC DOOR
		WD	WOOD DOOR
		TT	TERRAZZO TILE

GENERAL NOTES

1. THE MANUFACTURER'S NAMES AND THEIR PRODUCTS REFERENCED ONLY INDICATE THE COLOR, TEXTURE, AND PATTERN REQUIRED FOR THE MATERIALS LISTED. THE PRODUCTS FURNISHED SHALL MEET THE COLOR, TEXTURE, AND PATTERN INDICATED AS WELL AS THE MATERIAL QUALITY AND PERFORMANCE SPECIFIED IN THE APPLICABLE TECHNICAL SPECIFICATIONS. THE USE OF MANUFACTURER'S NAMES AND PRODUCTS DO NOT PRECLUDE THE USE OF OTHER MANUFACTURER'S PRODUCTS OF APPROVED EQUAL COLOR, TEXTURE, AND/OR PATTERN IF ALL OTHER REQUIREMENTS ARE MET.
2. ALL VISIBLE GRILLES, DIFFUSERS, AND OTHER MECHANICAL RELATED FINISH OPENING DEVICES INCLUDING FIRE ALARMS SHALL BE PAINTED TO MATCH COLOR OF ADJACENT SURFACE.
3. REFER TO APPROPRIATE ARCHITECTURAL DRAWINGS AND DETAILS TO PROPERLY ASSESS THE FULL EXTENT OF WORK REQUIRED. SPECIFICALLY REFER TO THE REFLECTED CEILING PLANS AND BUILDING SECTIONS TO DETERMINE HEIGHTS OF REQUIRED WALL MATERIALS, SPECIAL CONDITIONS AND STRUCTURES, ETC.
4. REFER TO EXTERIOR ELEVATIONS FOR EXTERIOR FINISH SELECTIONS.
5. INFILL FLOOR AT SLAB RECESSES NOT TO RECEIVE CERAMIC TILE WITH CONCRETE LEVEL WITH ADJACENT FLOOR SURFACES PRIOR TO APPLYING FLOOR FINISH.
6. WALL AND CEILING GWB SURFACES SHALL BE PAINTED WITH FLAT FINISH, TRIM SHALL BE SEMI–GLOSS.
7. INSTALL PLASTIC BUMPER RAILS AND CORNER GUARDS AT MAIN CORRIDORS
8. INTERIOR SURFACE OF EXTERIOR METAL DOORS AND FRAMES SHOULD COMPLY WITH P–4

NOTE:
NOT ALL FINISHES APPLY TO ALL BUILDINGS.

REV	DATE	BY	SUB	APP	DESCRIPTION
0	06/30/10				SITE ADAPT CONSTRUCTION PLANS

DESIGNED N. SPAHIC
DRAWN C. JUNG
CHECKED J. ANDERSON
IN CHARGE D. WHEELER
DATE 30 JUNE 2010

AFGHAN NATIONAL SECURITY FORCE
COMPREHENSIVE PLAN FOR FACILITIES DEVELOPMENT
MINISTRY OF INTERIOR (MoI) – AFGHAN NATIONAL POLICE
PROVINCIAL FIRE STATION – TYPE–B
SITE POWER HOUSE ROOM FINISH SCHEDULE

SCALE AS SHOWN
PROJECT NO. 6151–08–0328
07–A–602

NOTES:
1. TOP OF SLAB-ON-GRADE SHAL BE AT DATUM ELEV. 0+00.
2. REFER TO STRUCTURAL SHEET SERIES 00-S-XXX FOR ADDITIONAL NOTES AND DETAILS.
3. CONTRACTOR SHALL COORDINATE GENERATOR ANCHORAGE IN ACCORDANCE WITH MANUFACTURER'S RECOMMENDATIONS & SPECIFICATIONS.

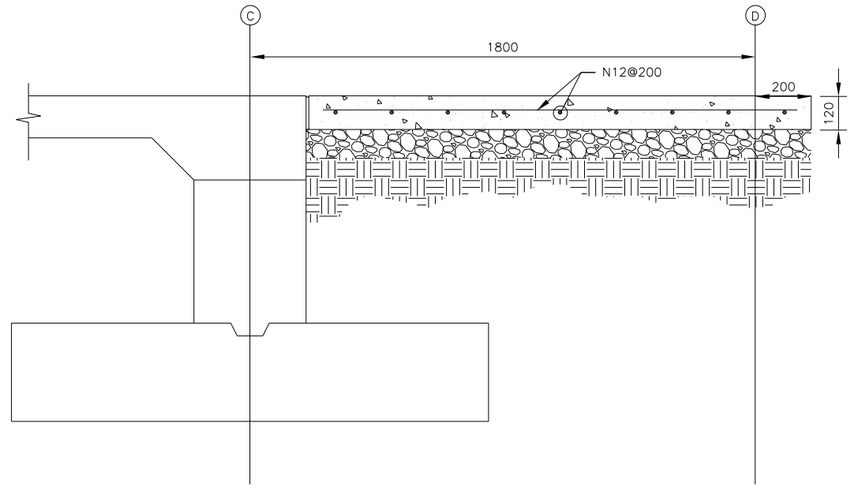

A SECTION
07-S-101 SCALE 1:10

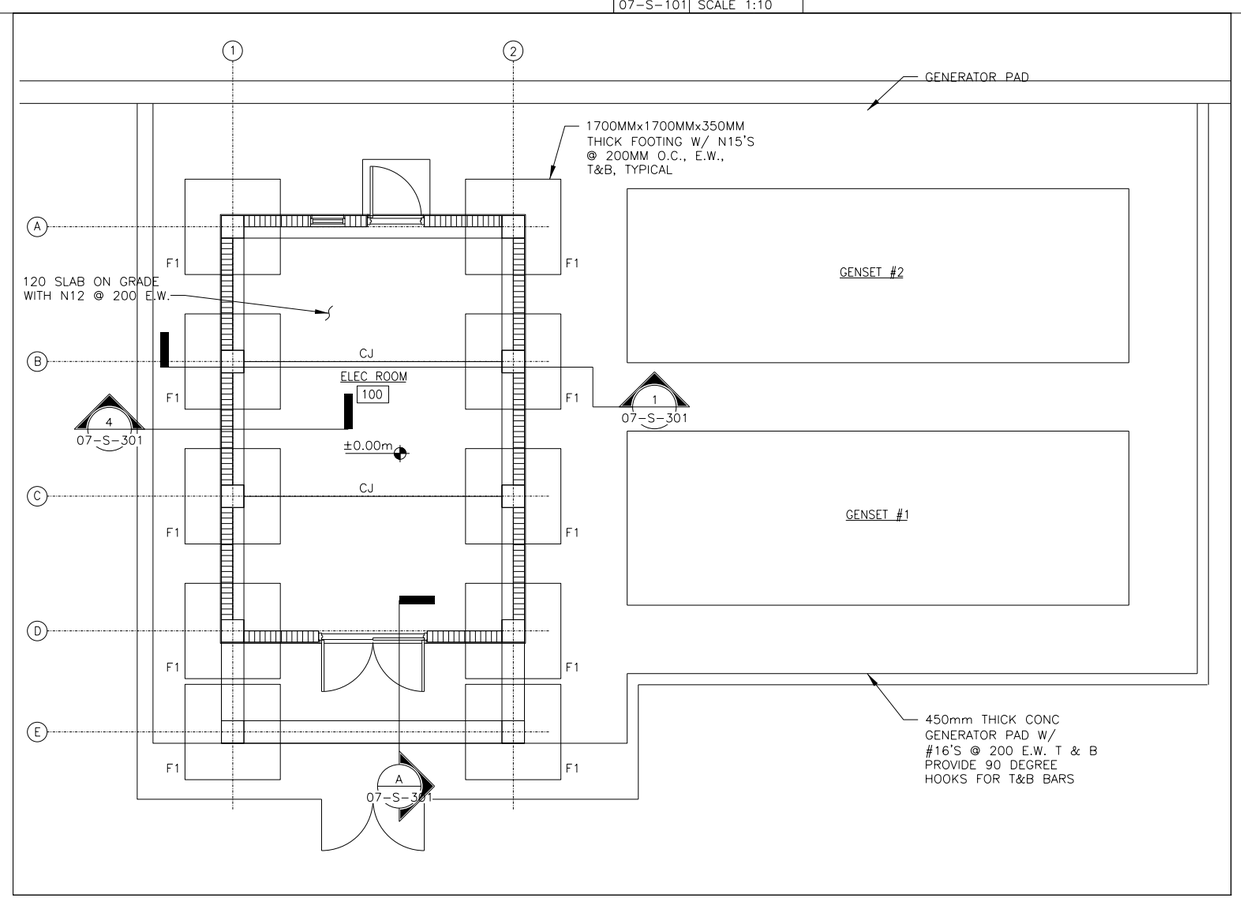

1 SITE POWER HOUSE STRUCTURAL PLAN
07-S-101 SCALE 1:50

REV	DATE	BY	SUB/APP	DESCRIPTION
0	06/30/10			SITE ADAPT CONSTRUCTION PLANS

DESIGNED V. STEGMEIR
DRAWN M. LORENZ
CHECKED M. GARVER
IN CHARGE D. WHEELER
DATE 30 JUNE 2010

AFGHAN NATIONAL SECURITY FORCE COMPREHENSIVE PLAN FOR FACILITIES DEVELOPMENT

MINISTRY OF INTERIOR (MoI) – AFGHAN NATIONAL POLICE PROVINCIAL FIRE STATION – TYPE-B

SITE POWER HOUSE FOUNDATION PLAN

SCALE AS SHOWN

PROJECT NO. 6151-08-0328

07-S-101

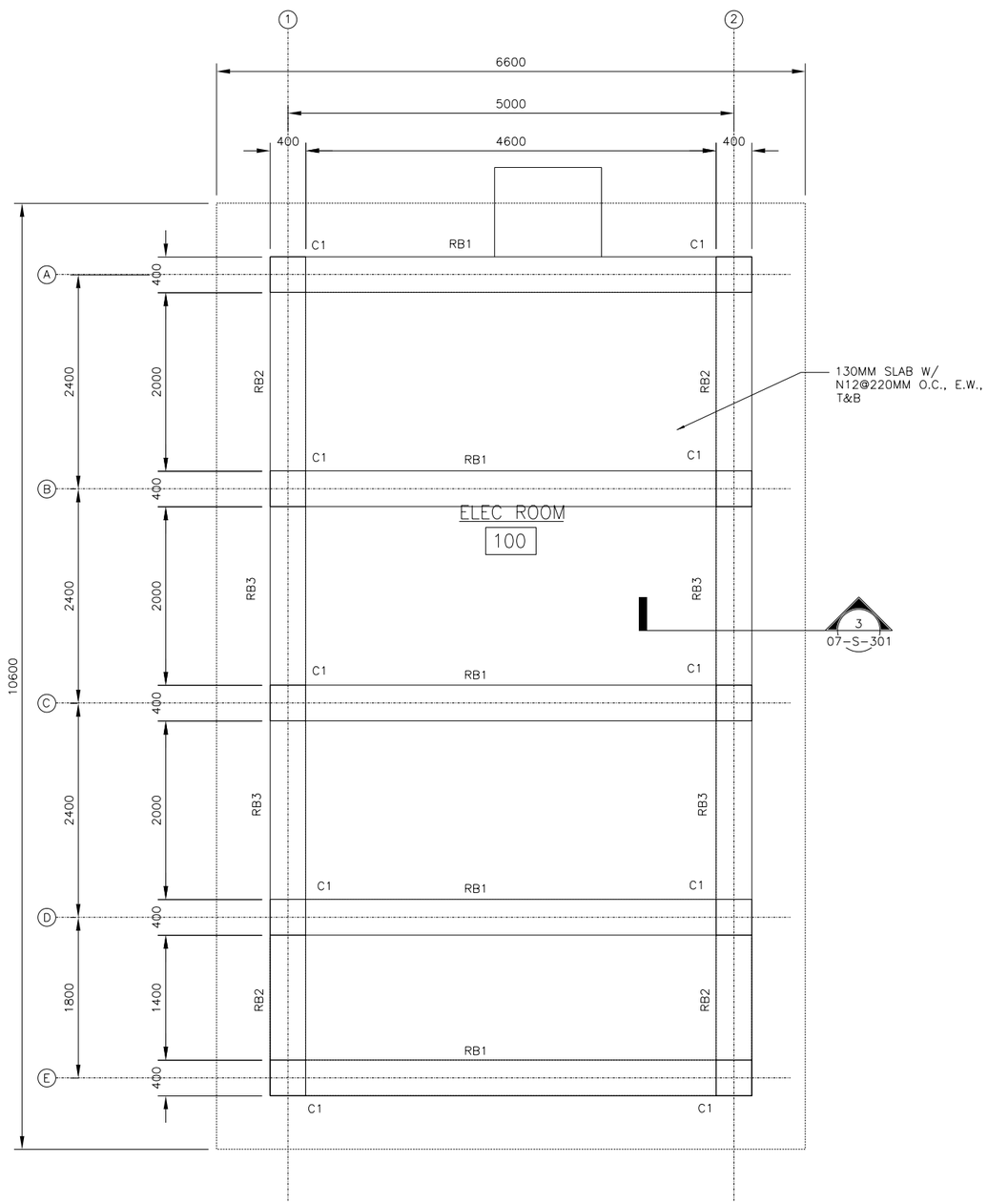

NOTES:
1. TOP OF ROOF SLAB ELEVATION SHALL BE +3480MM

1 SITE POWER HOUSE ROOF FRAMING PLAN
07-S-102 SCALE 1:30

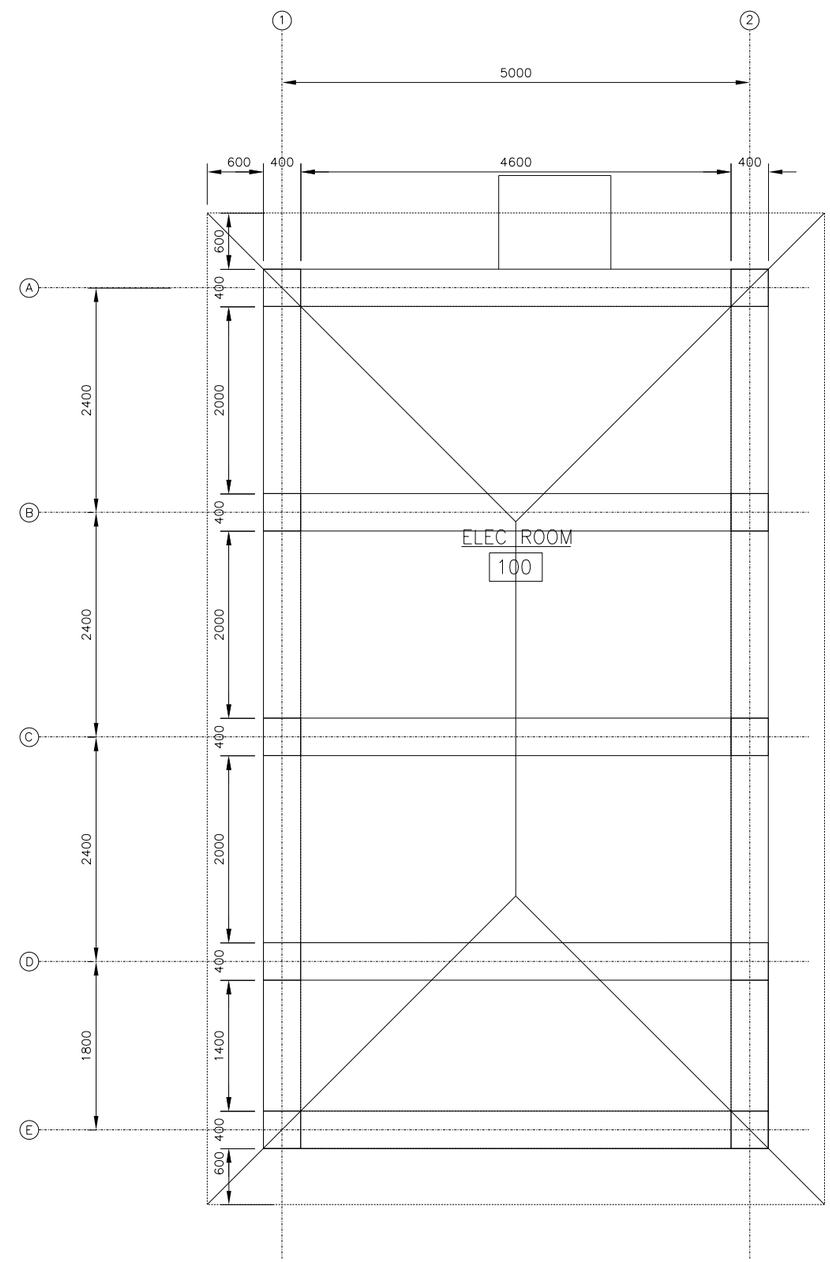

NOTES:
1. CONTRACTOR SHALL COORDINATE HIP ROOF FRAMING W/ ARCHITECTURAL 07-A-XXX SERIES DRAWINGS
2. REFER TO GENERAL NOTES ON SHEET 00-S-001 FOR ADDITIONAL INFORMATION

2 SITE POWER HOUSE ROOF FRAMING PLAN
07-S-102 SCALE 1:30

REV	DATE	BY	SUB	APP	DESCRIPTION
0	06/30/10				SITE ADAPT CONSTRUCTION PLANS

DESIGNED V. STEGMEIR
DRAWN M. LORENZ
CHECKED M. GARVER
IN CHARGE D. WHEELER
DATE 30 JUNE 2010

AFGHAN NATIONAL SECURITY FORCE COMPREHENSIVE PLAN FOR FACILITIES DEVELOPMENT

MINISTRY OF INTERIOR (MoI) – AFGHAN NATIONAL POLICE PROVINCIAL FIRE STATION – TYPE-B

SITE POWER HOUSE ROOF FRAMING & REINFORCEMENT PLAN

SCALE AS SHOWN

PROJECT NO. 6151-08-0328

07-S-102

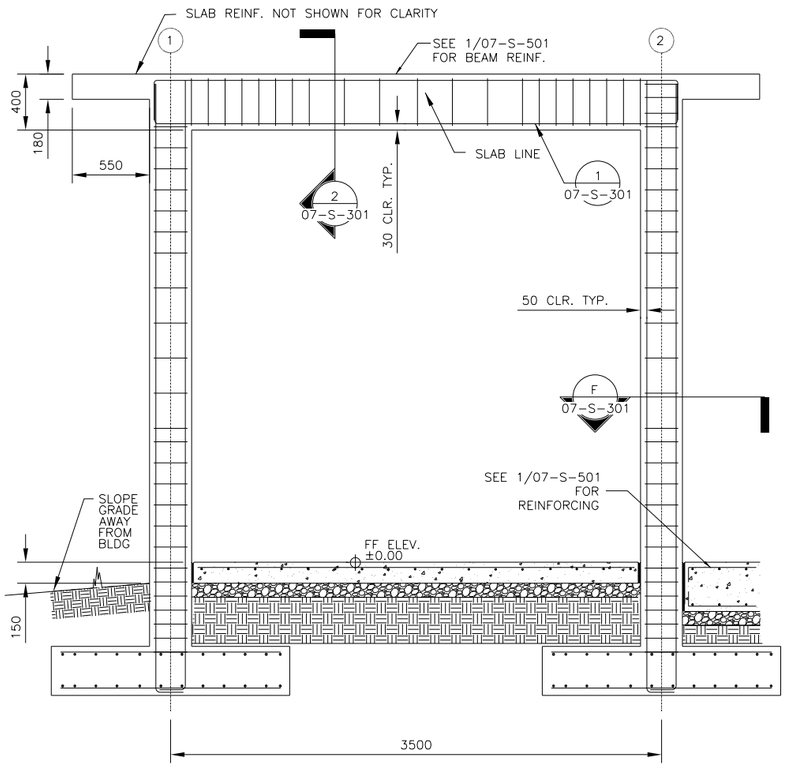

A SECTION
07-S-301 SCALE 1:20

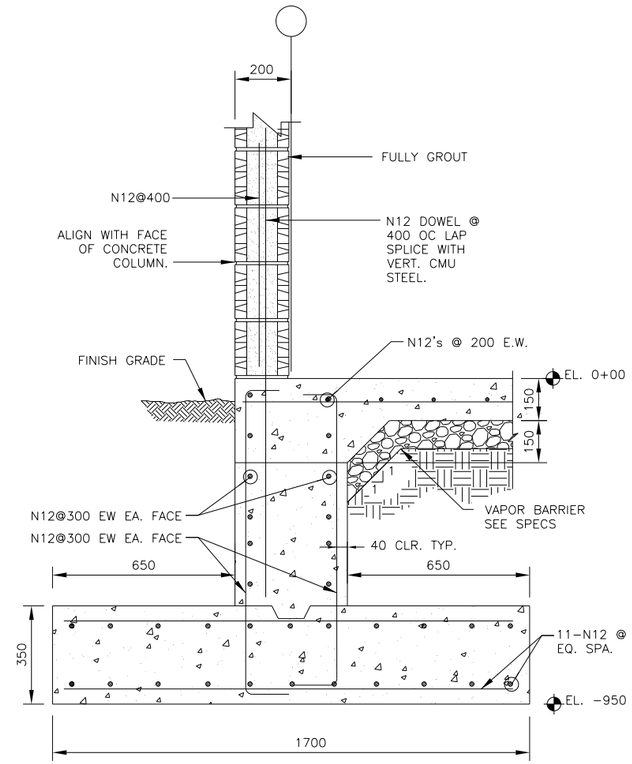

D SECTION
07-S-301 SCALE 1:10

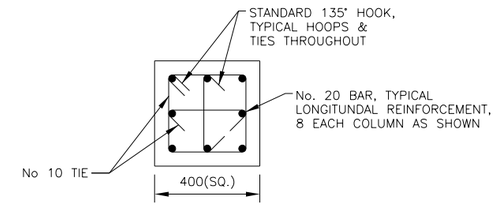

F SECTION
07-S-301 SCALE: NTS

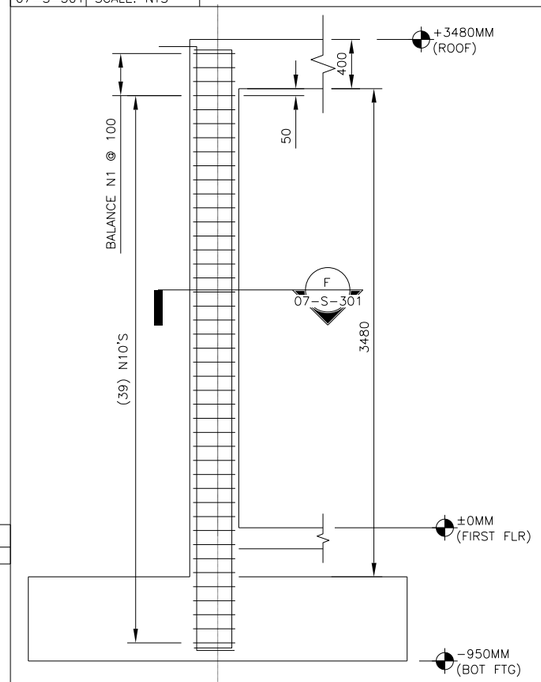

MARK
A/1, B/1, C/1, D/1, E/1
A/2, B/2 C/2, D/2, E/2

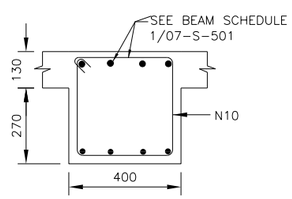

B SECTION
07-S-301 SCALE 1:10

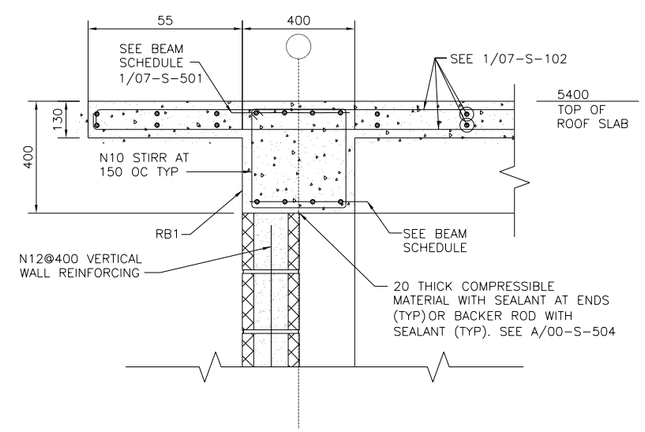

C SECTION
07-S-301 SCALE 1:10

E COLUMN SCHEDULE
07-S-301 SCALE: NTS

REV	DATE	BY	SUB	APP	DESCRIPTION
0	06/30/10				SITE ADAPT CONSTRUCTION PLANS

DESIGNED Y. STEGMEIR
DRAWN M. LORENZ
CHECKED M. GARVER
IN CHARGE D. WHEELER
DATE 30 JUNE 2010

AFGHAN NATIONAL SECURITY FORCE COMPREHENSIVE PLAN FOR FACILITIES DEVELOPMENT

MINISTRY OF INTERIOR (MoI) - AFGHAN NATIONAL POLICE PROVINCIAL FIRE STATION - TYPE-B

SITE POWER HOUSE SECTIONS

SCALE AS SHOWN

PROJECT NO. 6151-08-0328

07-S-301

CONCRETE BEAM SCHEDULE

BEAM MARK	BEAM SIZE		REINFORCING			STIRRUPS			REMARKS
	WIDTH (MM)	DEPTH (MM)	BOTTOM BARS	TOP LEFT BARS	TOP RIGHT BARS	SIZE	TYPE	SPACING EACH END (MM)	
RB1	400	400	4-N19S	4-N16L	4-N26S	N10	A	1@50;8@90;	Provide 90o Hooks, Eq. End
			4-N16L					R@180	
RB2	400	400	4-N16L	-	4-N16S	N10	A	1@50;8@90;	Splice RB2 Bars w/ RB3 "L" Bars, T&B
								R@180	
RB3	400	400	4-N16L	4-N16L	-	N10	A	1@50;8@90;	Extend "L" Bars over EA. Support and Splice w/ RB2, T&B
								R@180	

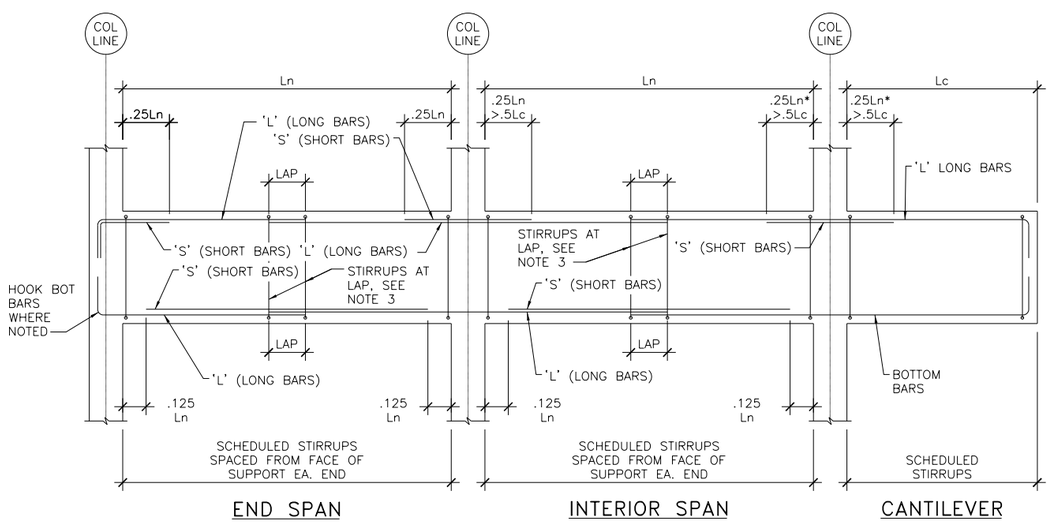

NOTES:
1. Ln* INDICATES GREATER OF TWO ADJACENT SPANS
2. FOR BAR LAPS SEE 3/00-S-501
3. MAX SPACING OF STIRRUPS @ LAP SHALL BE 10MM O.C.

1 TYPICAL CONCRETE BEAM DIAGRAM

07-S-501 SCALE: NTS

REV	DATE	BY	SUB	APP	DESCRIPTION
0	06/30/10				SITE ADAPT CONSTRUCTION PLANS

DESIGNED V. STEOMEIR
DRAWN M. LORENZ
CHECKED MIKE GARVER
IN CHARGE D. WHEELER
DATE 30 JUNE 2010

AFGHAN NATIONAL SECURITY FORCE COMPREHENSIVE PLAN FOR FACILITIES DEVELOPMENT

MINISTRY OF INTERIOR (MoI) - AFGHAN NATIONAL POLICE PROVINCIAL FIRE STATION - TYPE-B

SITE POWER HOUSE STRUCTURAL BEAM DETAIL

SCALE AS SHOWN

PROJECT NO. 6151-08-0328

07-S-501

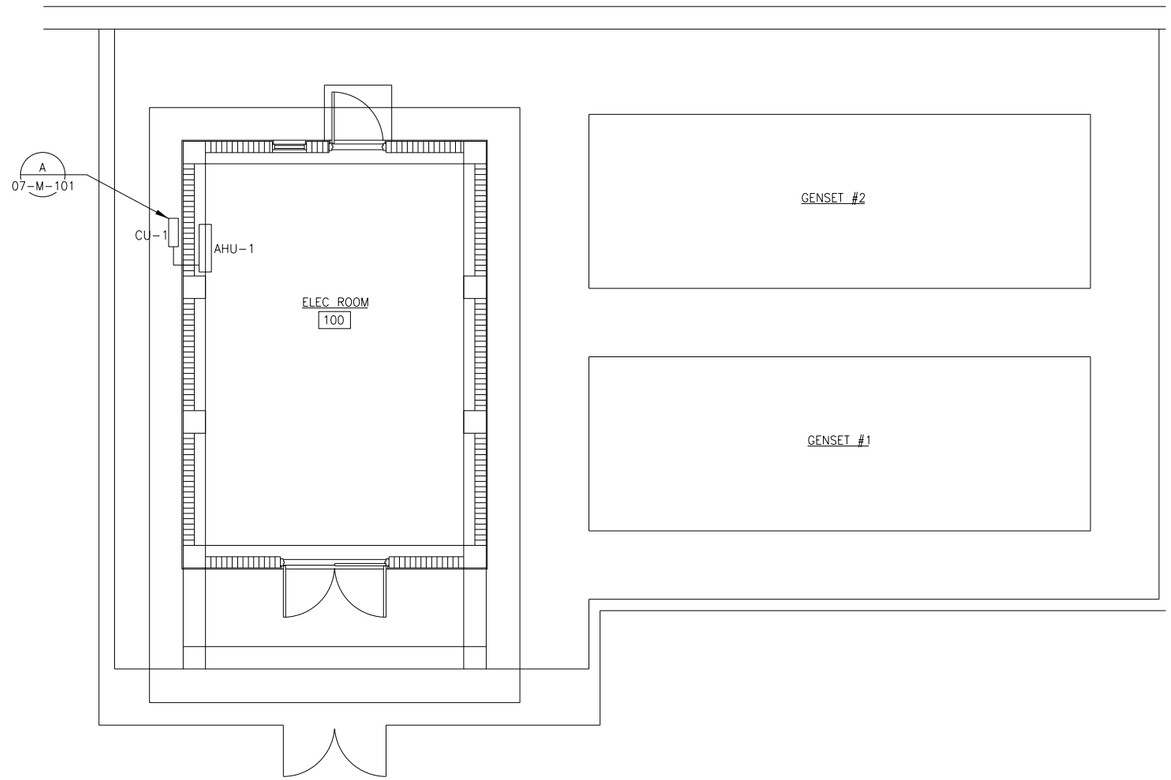

1 SITE POWER HOUSE HVAC PLAN
07-M-101 1:50

GENERAL NOTES:

1. SEE SHEET 00-M-001 FOR GENERAL NOTES, LEGEND, AND ABBREVIATIONS.
2. ALL DUCTWORK, EQUIPMENT, APPURTENANCES, AND ACCESSORIES TO BE MOUNTED WITH SEISMIC RESTRAINTS IN ACCORDANCE WITH SITE-ADAPTED CONDITIONS AND PER MANUFACTURER'S RECOMMENDATIONS.
3. CONDENSATE LINE TO BE ROUTED PARALLEL TO REFRIGERANT LINE TO SPLASH AT GRADE. PROVIDE WITH SPLASH BLOCK.

SPLIT SYSTEM AIR CONDITIONING UNIT SCHEDULE (S)

NO.	HEATING TYPE	HEATING CAPACITY (btu)	COOLING CAPACITY (btu)	POWER SUPPLY (V)	FREQUENCY (HZ)	POWER INPUT (W)	AIRFLOW (m^3/h)	WEIGHT IU/OU (kg)	BASIS OF DESIGN	REMARKS
AHU-1	HEAT PUMP	36,000	36,000	220	50	3190	1250	25/75	CHIGO CSA-36CO	1, 2, 3, 4, 5, 6, 7

REMARKS:
1. OUTDOOR AMBIENT CONDITIONS ARE 35 C, DB 20.6 IN SUMMER.
2. OUTDOOR AMBIENT TEMPERATURE IS -16 C IN WINTER.
3. PROVIDE WITH LOW AMBIENT CONTROL EQUIPMENT.
4. PROVIDE FACTORY MOUNTED DISCONNECT SWITCH.
5. PROVIDE REMOTE THERMOSTAT FOR ROOM TEMPERATURE CONTROL.
6. AHU TO BE MOUNTED ON 100mm CONCRETE PAD.
7. CONTROL WIRING FOR REMOTE THERMOSTAT BY CONTROLS CONTRACTOR.

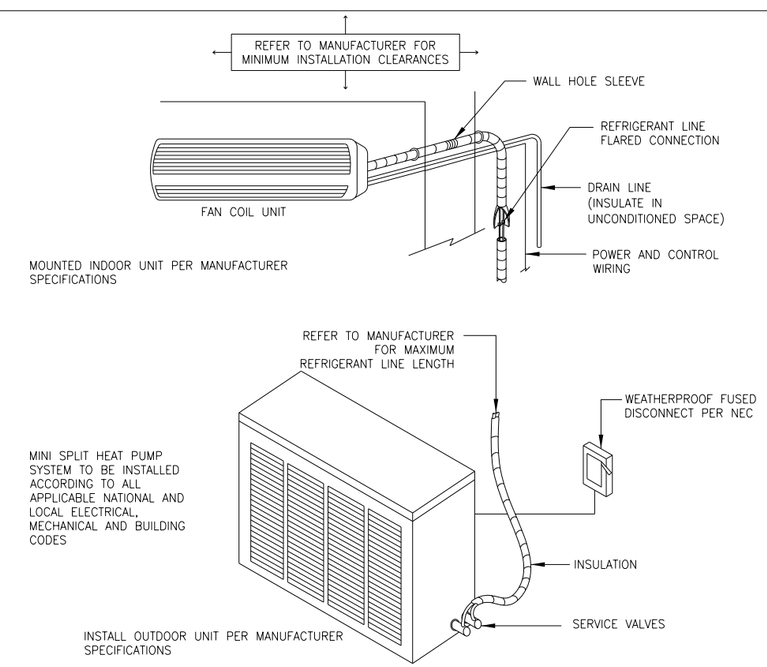

A SPLIT SYSTEM HVAC UNIT
07-M-101 N.T.S.

REV	DATE	DESCRIPTION	BY	SUB	APP
0	06/30/10	SITE ADAPT CONSTRUCTION PLANS			

DESIGNED M. FESCHER
DRAWN C. JUNG
CHECKED J. MARIANETTI
IN CHARGE D. WHEELER
DATE 30 JUNE 2010

AFGHAN NATIONAL SECURITY FORCE COMPREHENSIVE PLAN FOR FACILITIES DEVELOPMENT
MINISTRY OF INTERIOR (MoI) - AFGHAN NATIONAL POLICE PROVINCIAL FIRE STATION - TYPE-B
SITE POWER HOUSE MECHANICAL HVAC PLAN

SCALE AS SHOWN
PROJECT NO. 6151-08-0328
07-M-101

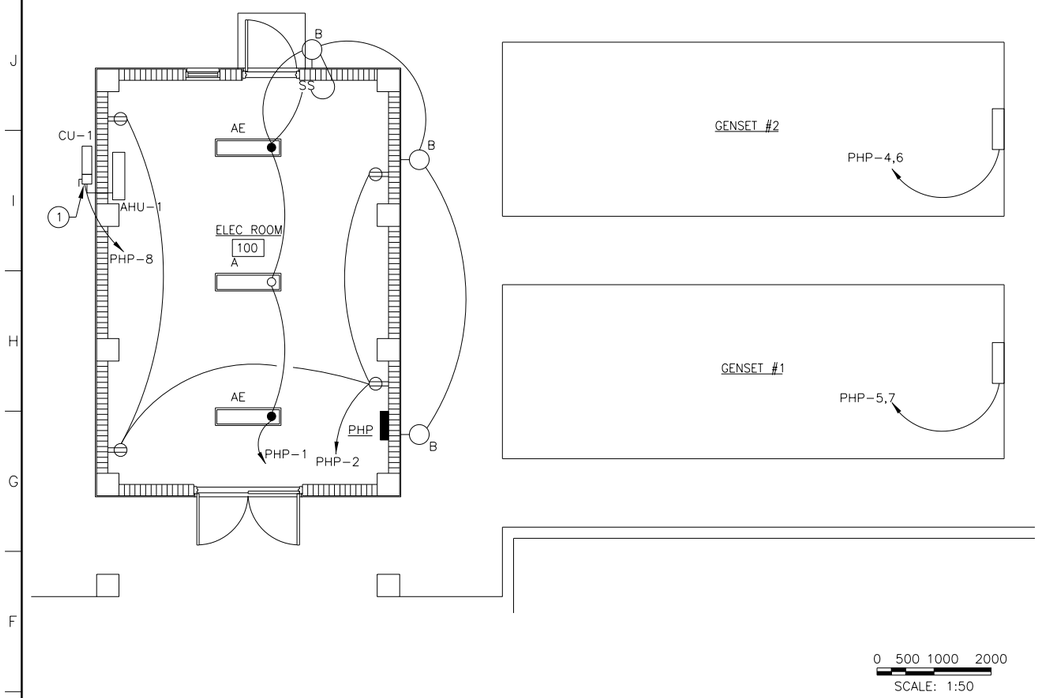

1 SITE POWER HOUSE ELECTRICAL PLAN

07-E-101 SCALE : 1:50

GENERAL NOTES:

1. SEE SHEET 00-E-001 AND 00-E-002 FOR LEGEND, ABBREVIATIONS AND GENERAL NOTES.
2. COORDINATE MECHANICAL EQUIPMENT WITH MECHANICAL AND PLUMBING DRAWINGS.
3. ALL EXPOSED INTERIOR CONDUITS SHALL BE RGS THREADED (TYPICAL FOR INTERIORS).
4. PANEL BOARD PHP SHALL BE SUITABLE FOR USE AS SERVICE EQUIPMENT WITH NEMA 1 ENCLOSURE.

KEY NOTE:

(1) SEE DETAIL B/07-E-101.

PANEL PHP — TYPE MAIN BREAKER — K.A.I.C 22,000 AMPS MIN. — MOUNTING SURFACE

VOLTAGE 380/220V,3ø,4W — MAINS 100 AMPS — ENTRY TOP — LOCATION POWER HOUSE ELECTRICAL RM #100

POLE	TRIP	CONDUCTORS MM²	CONDUIT	DESIGNATION	KVA	NO	PHASE øA	PHASE øB	PHASE øC	NO	KVA	DESIGNATION	CONDUIT	CONDUCTORS MM²	TRIP	POLE
1	20A	2#4+#4GND	21MM	LIGHTING	.68	1	1.4			2	.72	RECEPTACLES	21MM	2#4+#4GND	20A	1
1	20A			SPARE		3		7.5		4	7.5	GENERATOR AUX. EQUIP.	27MM	3#25+#6GND	60A	2
2	60A	3#25+#6GND	27MM	GENERATOR AUX. EQUIP.	7.5	5			15	6	7.5	↓		↓		↓
↓		↓		↓	7.5	7	10			8	2.5	CU-1 & AHU-1	21MM	2#4+#4GND	20A	1
3	30A	3#6+#6GND	21MM	TVSS		9		3.5		10	3.5	FUEL DISPENSER	21MM	2#4+#4GND	20A	1
↓		↓		↓		11				12		SPARE			20A	1
						13				14		SPARE			20A	1
						15				16		SPARE			20A	1
						17				18						
						19				20						
						21				22						
						23				24						
						25				26						
						27				28						
						29				30						
				TOTAL:			11.4	11	15.0			37.4 KVA /.66 X 1.25 =70.8 AMPS		USE 100 AMP PANEL		

LIGHTING FIXTURE SCHEDULE

MARK	LAMPS	VOLTAGE	FIXTURE DISCRIPTION	MOUNTING	NOTES
A	2-T832W	220	SURFACE MOUNTED FLUORESCENT WRAP AROUND WITH ACRYLIC LENS WITH HPF ELECTRONIC BALLAST	SURFACE	
AE	2-T832W	220	SURFACE MOUNTED FLUORESCENT WRAP AROUND WITH ACRYLIC LENS WITH HPF ELECTRONIC BALLAST AND EMERGENCY BATTERY BACKUP	SURFACE	
B	1-100MH	220	WALL MOUNTED HID AREA FLOOD LIGHT WITH DARK BRONZE ALUMINUM HOUSING, HPF BALLAST AND ACRYLIC LENS.	BRACKET	MOUNT HIGH AS POSSIBLE

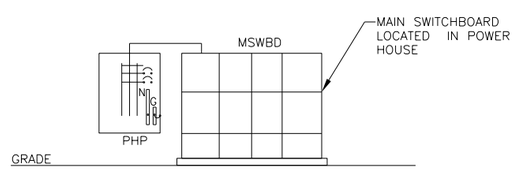

A SITE POWER RISER DIAGRAM

07-E-101 NOT TO SCALE

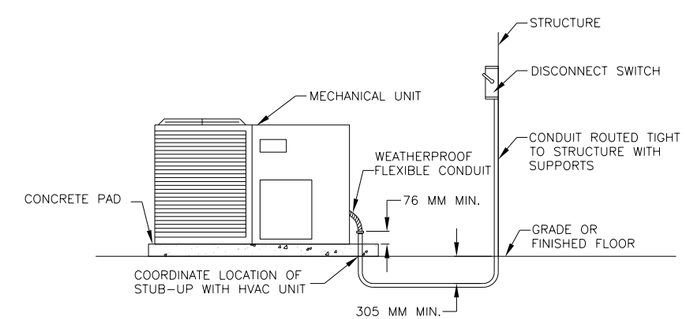

B HVAC UNIT CONNECTION DETAIL

07-E-101 NOT TO SCALE

REV	DATE	BY	SUB'APP	DESCRIPTION
0	06/30/10			SITE ADAPT CONSTRUCTION PLANS

DESIGNED J. COLMER
DRAWN L. KRAVCHUK
CHECKED B. CRAWFORD
IN CHARGE D. WHEELER
DATE 30 JUNE 2010

AFGHAN NATIONAL SECURITY FORCE COMPREHENSIVE PLAN FOR FACILITIES DEVELOPMENT

MINISTRY OF INTERIOR (MoI) - AFGHAN NATIONAL POLICE PROVINCIAL FIRE STATION - TYPE-B

SITE POWER HOUSE ELECTRICAL PLANS, SCHEDULES & DETAILS

SCALE AS SHOWN

PROJECT NO. 6151-08-0328

07-E-101

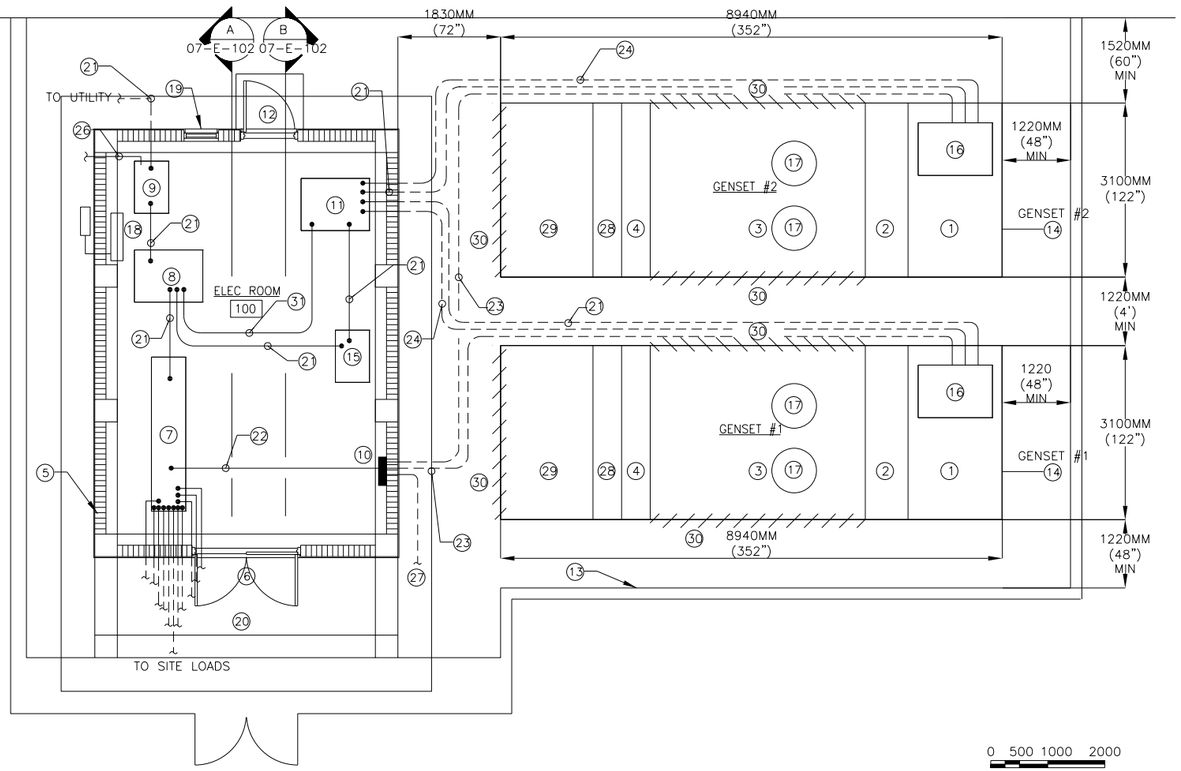

0 500 1000 2000

SCALE: 1:50

1 SITE POWER HOUSE ELECTRICAL PLAN

07-E-102 SCALE : 1:50

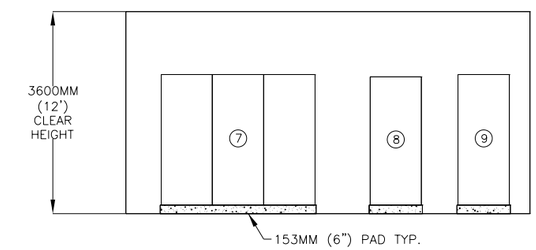

A RISER

07-E-102 SCALE : 1:50

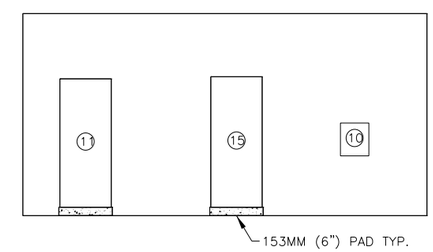

B RISER

07-E-102 SCALE : 1:50

KEY NOTES:

1. CIRCUIT BREAKER AND CONTROL PANEL
2. GENERATOR
3. ENGINE
4. RADIATOR
5. SITE POWER HOUSE BUILDING INSIDE DIMENSIONS: 7200MM LENGTH X 5000MM WIDTH X 3600MM CLEAR HEIGHT
6. SWING DOOR
7. MAIN SWITCHBOARD – MSWBD 1600A
8. U-G ATS, 1600A
9. MAIN SERVICE DISCONNECT SWITCH, 1600A
10. PANELBOARD "PHP", 100A
11. G-G ATS, 1600A
12. DOOR
13. OUTDOOR CONCRETE PAD
14. GENERATOR/ENGINE/FUEL TANK–OUTSIDE ENCLOSURE. DIMENSIONS: 8940MM LENGTH X 3100MM WIDTH X 3200MM HEIGHT
15. SAFETY DISCONNECT SWITCH, 1600A
16. CONDUIT ENTRY
17. ENGINE EXHAUST
18. AHU–1
19. LOUVER
20. CANOPY
21. (4) SETS (4#300MM², 1#70MM²G, 103MMC) – RGS CONDUIT.
22. 4#50MM², 1#16MM²G, 41MMC – RGS CONDUIT.
23. 3#25MM², 1#6MM²G, 27MMC – RGS CONDUIT FOR GENERATOR LOAD CENTER. LOAD CENTER PROVIDES POWER TO WATER HEATER, BATTERY CHARGER, LIGHTS, LOAD BANK) VERIFY WITH GENERATOR MANUFACTURER.
24. ATS G–G CONTROLS FOR EACH GENERATOR: 8#4MM² CONTROL WIRES– TWO CONTROL WIRES FOR ENGINE START, TWO CONTROL WIRES FOR 24VDC & 4 SPARES. VERIFY WITH GENERATOR MANUFACTURER.
25. NOT USED.
26. 2 –95MM² SOLID COPPER GROUNDING CONDUCTOR TO COUNTERPOISE. SEE GROUNDING SITE PLAN.
27. 2–4MM², 4MM²G, 21MMC – RGS TO FUEL DISPENSER. SEE 00–E–103 FOR CONTINUATION.
28. LOAD BANK
29. AIR INLET
30. AIR OUTLET
31. 2#4MM² CONTROL WIRES FOR ENGINE START.

REV	DATE	BY	SUB	APP	DESCRIPTION
0	06/30/10				SITE ADAPT CONSTRUCTION PLANS

DESIGNED S. WILLIAMS
DRAWN S. WILLIAMS
CHECKED B. CRAWFORD
IN CHARGE D. WHEELER
DATE 30 JUNE 2010

AFGHAN NATIONAL SECURITY FORCE COMPREHENSIVE PLAN FOR FACILITIES DEVELOPMENT

MINISTRY OF INTERIOR (MoI) – AFGHAN NATIONAL POLICE PROVINCIAL FIRE STATION – TYPE–B

SITE POWER HOUSE ELECTRICAL EQUIPMENT DETAILS

SCALE AS SHOWN

PROJECT NO. 6151–08–0328

07–E–102

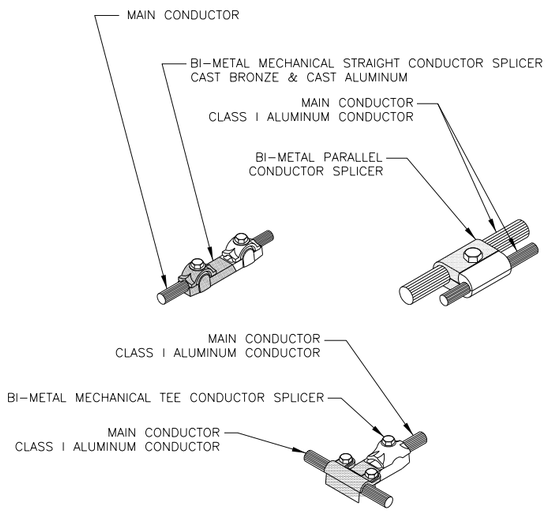

A BI-METAL CABLE CLAMPS AND SPLICERS

07-E-103 NOT TO SCALE

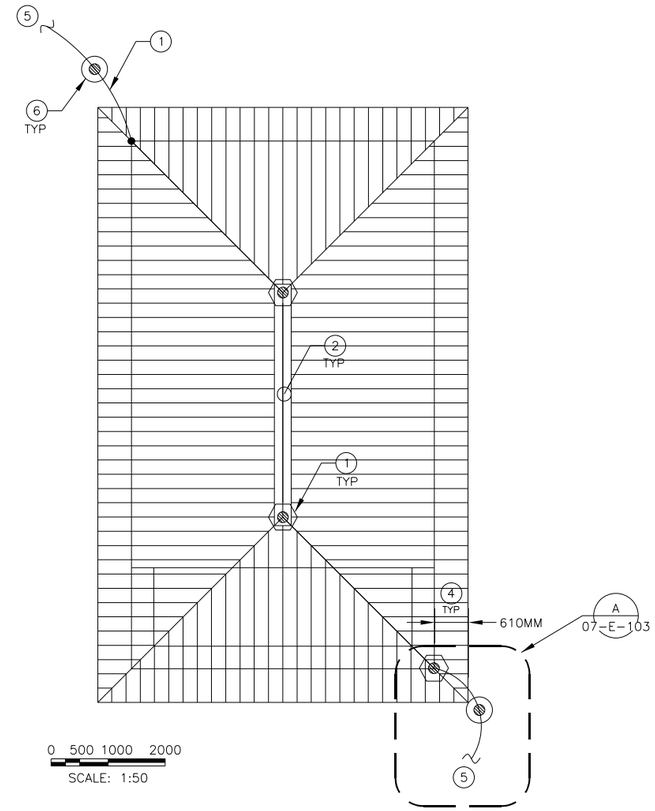

1 SITE POWER HOUSE ROOF PLAN LIGHTNING PROTECTION

07-E-103 SCALE : 1:50

GENERAL NOTES:

1. SEE SHEET 00-E-001 AND 00-E-002 FOR LEGEND, ABBREVIATIONS AND GENERAL NOTES.
2. CLASS I COMPONENTS SHALL APPLY FOR THE SITE POWER HOUSE, HEIGHT IS NOT MORE THAN 23M (75 FEET).
3. ALL LIGHTNING PROTECTION CONDUCTORS SHALL BE FASTENED NOT MORE THAN 914.4MM (3 FEET) MAXIMUM SPACING.
4. CONDUCTORS SHALL INTERCONNECT ALL AIR TERMINALS AND SHALL FORM A TWO-WAY PATH FROM EACH AIR TERMINAL HORIZONTALLY OR DOWNWARD TO CONNECTORS WITH GROUND RODS.
5. THE INSTALLATION OF THE LIGHTNING PROTECTION SYSTEM SHALL MEET THE REQUIREMENTS OF NATIONAL FIRE PROTECTION ASSOCIATION 780 AND UNDER WRITERS LAB UL96/96A.
6. AIR TERMINALS SHALL NOT BE LESS THAN 254MM (10 INCHES) LONG ABOVE THE OBJECT TO BE PROTECTED WHEN THE INTERVAL BETWEEN AIR TERMINALS IS NOT MORE THAN 6M (20 FEET).
7. AIR TERMINALS SHALL BE PLACED ON ALL CHIMNEYS, VENTS, AND ROOF TOP METAL BODIES WHEN SUCH CHIMNEYS, VENTS OR ROOF TOP METAL BODIES ARE NOT WITHIN A ZONE OF PROTECTION.
8. AT LEAST TWO DOWN CONDUCTORS SHALL BE INSTALLED.
9. RADIUS OF BEND SHALL NOT BE LESS THAN 203MM (8 INCHES).
10. PROVIDE #70MM² (#2/0 AWG) COPPER GROUNDING CONDUCTORS FOR THE LIGHTNING PROTECTION GROUNDING. ALL EXTERIOR GROUNDING CONDUCTORS SHALL BE BURIED A MINIMUM OF 762MM (30") BELOW GRADE OR 152.4MM (6") BELOW FROST LINE, WHICHEVER IS GREATER.

KEY NOTES:

1. AIR TERMINAL SHALL BE 12.7MMX457MM (1/2" X 18") ALUMINUM, 90 DEGREES VERTICAL. SEE DETAIL B/07-E-103.
2. MAIN CONDUCTORS SHALL BE 28 STRAND, 14 GAUGE CLASS I ALUMINUM ROOF CABLE, 58.9 KG/304.8M (130POUNDS/1000 FEET), 15.875 MM DIAMETER, 70MM² (#1/0 AWG).
3. ALUMINUM DOWN CONDUCTORS SHALL BE CONNECTED TO COPPER DOWN CONDUCTOR AT LEAST 457MM (18 INCHES) ABOVE GRADE LEVEL. BIMETALLIC CONNECTORS WILL BE USED. SEE DETAILS ON THIS SHEET FOR BIMETALLIC CONNECTORS.
4. 610 MM (2 FEET) MAXIMUM SPACING FROM RIDGE END.
5. SEE SHEET 00-E-102 FOR CONTINUATION TO SITE GROUNDING PLAN.
6. PROVIDE AND INSTALL 19MMX3048MM (3/4" X 10'-0") COPPER CLAD STEEL GROUND RODS. IF ROCK IS ENCOUNTERED, GROUND ROD MAY BE INSTALLED WITH A MAXIMUM VARIATION OF 30 DEGREES FROM VERTICAL.

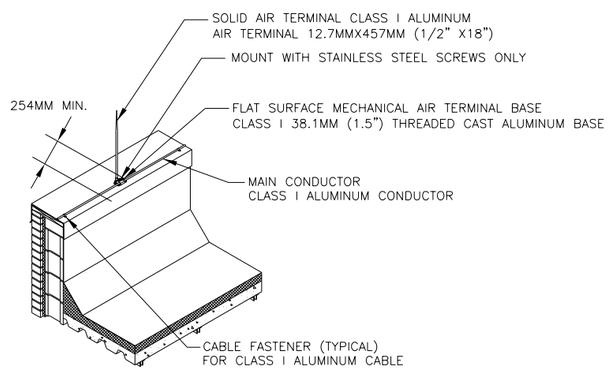

B AIR TERMINAL DETAIL

07-E-103 NOT TO SCALE

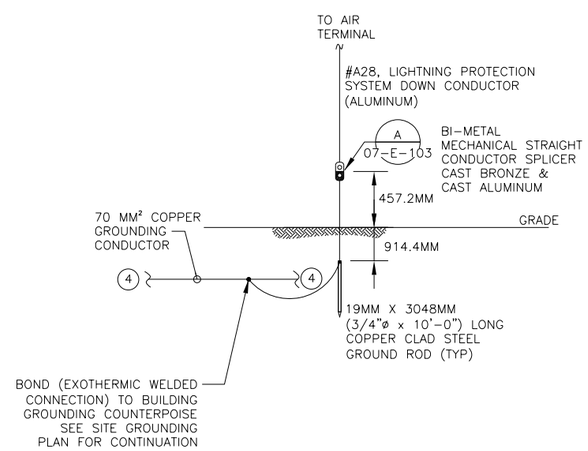

C BONDING LIGHTNING PROTECTION TO GROUNDING

07-E-103 SCALE : 1:50

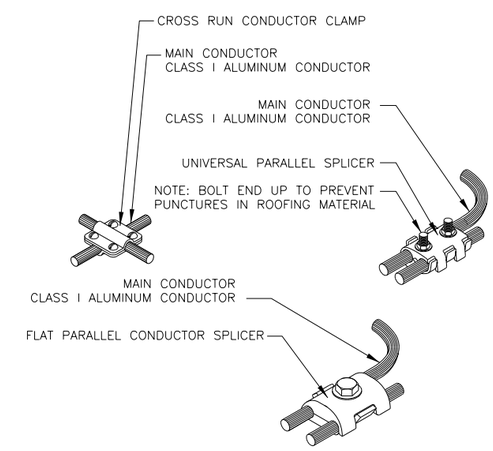

D CABLE CLAMPS AND SPLICERS

07-E-103 NOT TO SCALE

REV	DATE	BY	SUB	APP	DESCRIPTION
0	06/30/10				SITE ADAPT CONSTRUCTION PLANS

DESIGNED M. ESTAFANOUS
DRAWN L. KRAVCHUK
CHECKED B. CRAWFORD
IN CHARGE D. WHEELER
DATE 30 JUNE 2010

AFGHAN NATIONAL SECURITY FORCE
COMPREHENSIVE PLAN FOR
FACILITIES DEVELOPMENT

MINISTRY OF INTERIOR (MoI) – AFGHAN NATIONAL POLICE
PROVINCIAL FIRE STATION – TYPE-B

SITE POWER HOUSE LIGHTNING PROTECTION PLAN

SCALE
AS SHOWN

PROJECT NO.
6151-08-0328

07-E-103

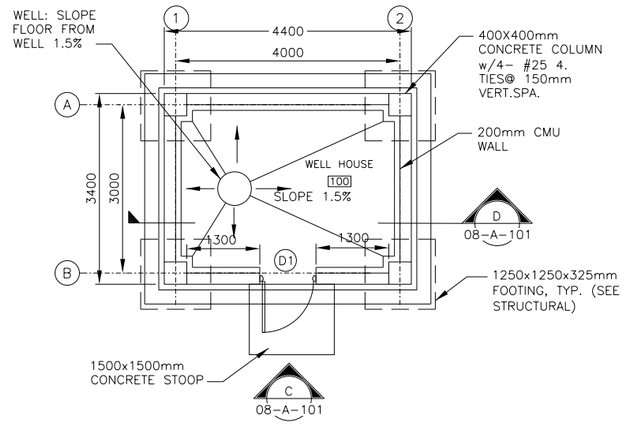

3 FLOOR PLAN
08-A-101 1:50

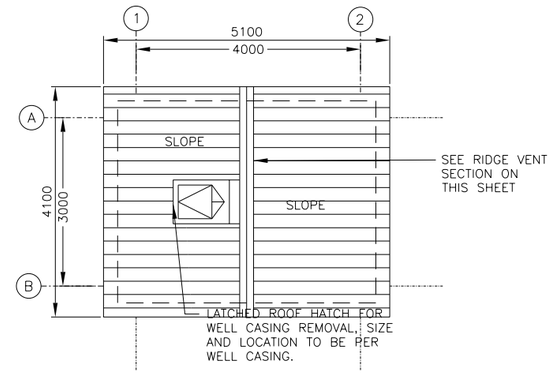

2 ROOF PLAN
08-A-101 1:50

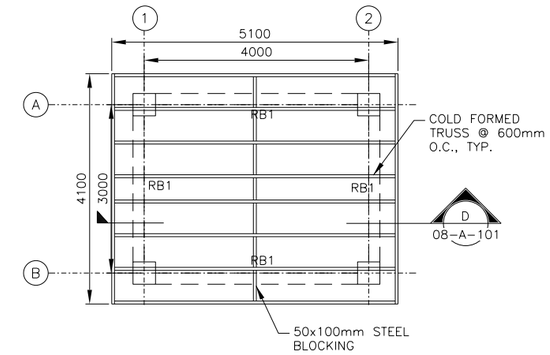

1 ROOF FRAMING PLAN
08-A-101 1:50

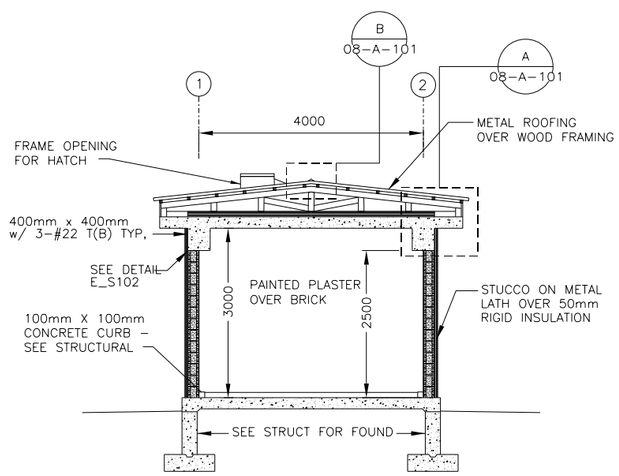

D SECTION
08-A-101 1:50

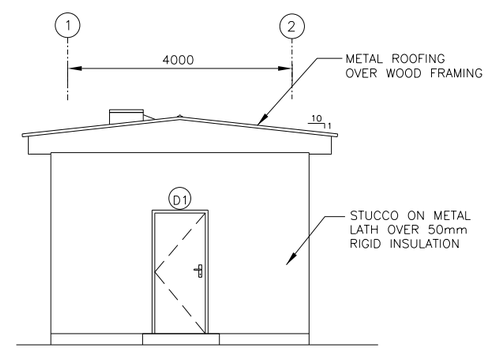

C ELEVATION
08-A-101 1:50

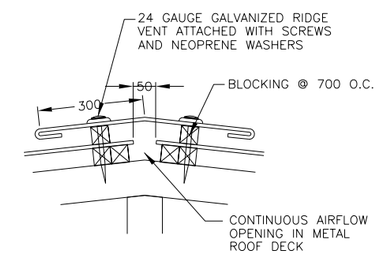

B TYPICAL RIDGE VENT DETAIL
08-A-101 SCALE N.T.S.

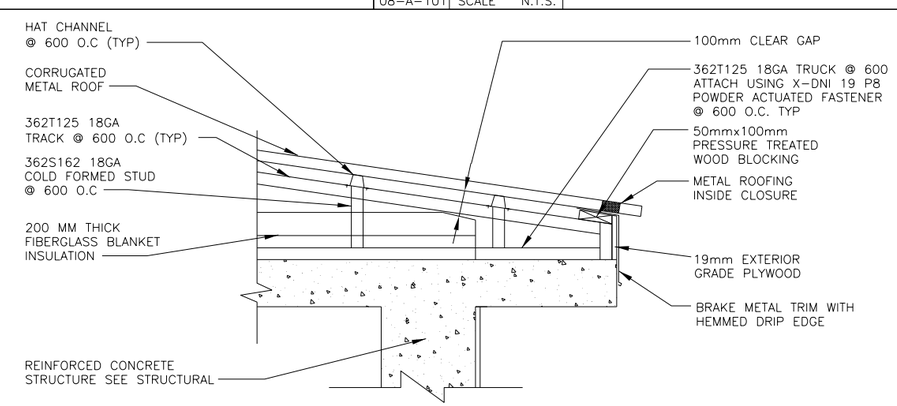

A TYPICAL EAVE DETAIL
08-A-101 SCALE N.T.S.

REV	DATE	BY	SUB/APP	DESCRIPTION
0	06/30/10			SITE ADAPT CONSTRUCTION PLANS

DESIGNED N. SAHIC
DRAWN C. JUNG
CHECKED J. ANDERSON
IN CHARGE D. WHEELER
DATE 30 JUNE 2010

AFGHAN NATIONAL SECURITY FORCE COMPREHENSIVE PLAN FOR FACILITIES DEVELOPMENT

MINISTRY OF INTERIOR (MoI) - AFGHAN NATIONAL POLICE PROVINCIAL FIRE STATION - TYPE-B

WELL HOUSE ROOF & FLOOR PLAN, ELEVATION & SECTION

SCALE AS SHOWN

PROJECT NO. 6151-08-0328

08-A-101

DOOR SCHEDULE

DOOR No.	DIMENSION WIDTH	HGT.	THK.	DOOR TYPE	DOOR MAT.	FRAME MAT.	HARDWARE	THRESHOLD	FIRE RATED	MATERIAL
D-1	914	2150	45	1	MTL	HM	HW-1	ALUM	–	EXTERIOR DOOR WITH STRIPPING

HARDWARE NOTES:

HW-1 1-1/2 PR HINGES
1 EA LOCKSET F04, OFFICE DOOR LOCK W/LEVERS, GRADE 1
1 EA THRESHOLD, J32130
1 SET WEATHERSEALS
1 SET SILENCERS

HW-2 1-1/2 PR HINGES
1 EA LOCKSET F02, PRIVACY LOCK W/LEVERS, GRADE 1
1 SET SILENCERS

DOOR TYPE NOTES:

1. EXTERIOR DOOR, INCLUDING GLAZING, SHALL MEET THE REQUIREMENTS OF UL752, LEVEL 5 RESISTANCE FOR PROTECTION AGAINST AK-47 FIRE.
2. DOORS AND FRAME COLORS SHALL MATCH ADJACENT WALL COLORS AS SELECTED BY THE CONTRACTING OFFICE.
3. HARDWARE SHALL BE HEAVY DUTY. COMMERCIAL GRADE, STAINLESS STEEL WITH A MATTE FINISH. THERE SHALL BE THREE HINGES AT EACH DOOR, AT LEAST 200/16/5MM, WITH BALL BERING , SECURED BY THREADED PINS.
4. FRAMES SHALL BE MOUNTED AND ADJUSTED IN ACCORDANCE WITH MANUFACTURER'S INSTRUCTIONS. FRAMES SHALL BE FASTENED WITH MINIMUM OF THREE FASTENING POINTS PER SIDE AT REGULAR INTERVALS.
5. ALL DOOR FRAMES SHALL BE FITTED WITH DOOR SILENCERS.
6. DIMENSIONS SHOWN ON DOOR SCHEDULE ARE BASED UPON MODULAR MASONRY (OR ROUGH OPENING), HEIGHT OF 2200MM FOR STANDARD PERSONAL DOORS. CONTRACTOR SHALL COORDINATE WITH DOOR SUPPLIER TO ENSURE THAT DIMENSIONS OF DOORS AND FRAMES PROVIDED ARE COMPATIBLE WITH DOOR OPENING DIMENSIONS.
7. ALL DOOR LOCKS SHALL MORTISED.
8. LOCK FUNCTION F04-OFFICE DOOR LOCK- LATCH BOLT OPERATED BY LEVER FROM EITHER SIDE EXCEPT WHEN OUTSIDE LEVER IS MADE INOPERATIVE BY A STOP OR MECHANICAL MEANS OTHER THAN A KEY. WHEN OUTSIDE LEVER IS LOCKED, LATCH BOLT MAY BE RETRACTED BY KEY FROM OUTSIDE OR BY ROTATING INSIDE LEVER.
9. LOCK FUNCTION F02- PRIVACY LOCK-LATCH BOLT OPERATED BY LEVER EITHER SIDE. DEADBOLT OPERATED BY TURN FROM INSIDE AND BY EMERGENCY KEY FROM OUTSIDE

NOTES:

1. FOR HARDWARE SET DESCRIPTION SEE SPECIFICATIONS SECTION 08710 PARAGRAPH 3.5.
2. CONTRACTOR TO USE LOCALLY FABRICATED DOORS AND WINDOWS.

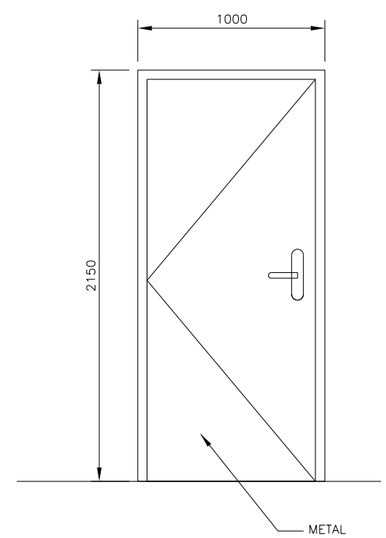

A DOOR
08-A-601 SCALE 1:30

REV	DATE	BY	SUB	APP	DESCRIPTION
0	06/30/10				SITE ADAPT CONSTRUCTION PLANS

DESIGNED N. SPANIC
DRAWN C. JUNG
CHECKED J. ANDERSON
IN CHARGE D. WHEELER
DATE 30 JUNE 2010

AFGHAN NATIONAL SECURITY FORCE
COMPREHENSIVE PLAN FOR FACILITIES DEVELOPMENT
MINISTRY OF INTERIOR (MoI) – AFGHAN NATIONAL POLICE
PROVINCIAL FIRE STATION – TYPE-B
WELL HOUSE DOOR & WINDOW SCHEDULE

SCALE AS SHOWN
PROJECT NO. 6151-08-0328
08-A-601

ROOM FINISH SCHEDULE

ROOM NO.	ROOM NAME	FLOOR MATERIAL	BASE MATERIAL	WALL MATERIAL	WALL FINISH	CEILING MATERIAL	CEILING FINISH	CEILING HEIGHT	DOOR & WINDOW FINISH MATERIAL	DOOR & WINDOW FINISH FINISH	REMARKS
100	WELL HOUSE	CONC/S	–	P	P–9	P	P–6	3000	MTD	P–4	

GENERAL FINISH NOTES/TYPICAL COLORS & MATERIAL SELECTION

FLOORING

CONC/S CONCRETE SEALED AND HARDENED WITH BROOM FINISH

TERRAZZO TILE (TT)
TT–1 AFGHAN LOCAL PRODUCT; 300mm X 300mm WITH SPECIAL POLISH

ENTRY MAT (MAT)
MAT–1 REESE PERFEC CLEAN ALUMINUM HINGE MAT; RECESSED FRAME WITH NO. 546 CARPET INSERTS, METAL FINISH: MIL ALUMINUM; CARPET INSERTS: MAUVE 8616

CERAMIC TILE (CT)
CT–1 R.A.K CERAMIC UAE; 300mm X 300mm UNPOLISHED PORCELAIN

CT–2 AFGHAN LOCAL PRODUCT; 300mm X 600mm POLISHED PORCELAIN

CT–3 AFGHAN LOCAL PRODUCT; 600mm X 1000mm UNPOLISHE PORCELAIN

CT–4 R.A.K CERAMIC UAE;#4/700RBEM–10 200mm X 200mm UNPOLISHE PORCELAIN

CT–5 R.A.K CERAMIC UAE;# 600CPAR–2 200mm X 300mm UNPOLISHE PORCELAIN

BASE TREATMENTS

MARBLE TILE (MT)
MT–1 AFGHAN LOCAL PRODUCT; 75mm X 100mm CROSS SHEEN PORCELAIN MARBLE TILE COVE BASE; #AXXX EMPRESS BLACK

WALL FINISHES

PAINT/EPOXY PAINT (P/EP):
P–1 BRIGHTO PAINTS; # 42 SAND STONE SUPER EMULSION

P–2 BRIGHTO PAINTS; # 127 CAMEO FOR EXTERNAL USE WEATHER SHIELD

P–3 BRIGHTO PAINTS; # X LATEX FOR WATER BASE WALL AND CEILING

P–4 BRIGHTO METALLIC ENAMEL; # 3 LIGHT GRAY SUITABLE FOR USE ON ALL TYPES OF INTERIOR AND EXTERIOR WOOD AND METAL SURFACES.

P–5 BRIGHTO METALLIC ENAMEL; # 42 ASH WHITE SUITABLE FOR USE ON ALL TYPES OF INTERIOR AND EXTERIOR WOOD AND METAL SURFACES.

P–6 BRIGHTO PAINTS; # 12 OFF WHITE

P–7 BRIGHTO PAINTS; #70 ROSE WHITE

P–8 BRIGHTO PAINTS; #69 LILY WHITE

P–9 BRIGHTO PAINTS; #40 PEACH CREAM

CERAMIC TILE (CT):
CT–4 R.A.K CERAMIC UAE;#4/700RBEM–10 200mm X 200mm UNPOLISHE PORCELAIN

CT–5 R.A.K CERAMIC UAE; # 600CPAR–2 200mm X 300mm UN–POLISHE

CEILING FINISHES

PAINTED CEILINGS (P)
P–1 BRIGHTO PAINT; # 12 OFF WHITE

MISCELLANEOUS SURFACES

LAMINATE SURFACES (LAM)
LAM–1 FORMICA; 953–58 ICE WHITE (BREAK ROOMS AND FMT COUNTERTOPS)
LAM–2 FORMICA; 7481–58 NATURAL BIRCH (BREAK ROOMS AND FMT– BASE AND UPPER CABINETS)
LAM–3 FORMICA; 1485–58 CHROME YELLOW (ELEVATOR)

TOILET PARTITIONS (TP)
NOT USED

SIGNAGE (S)
S–1 BACKGROUND COLOR: MATCH P–3, TEXT: WHITE

INTERIOR DOOR AND WINDOW FRAMES
P–4 BRIGHTO ; #3 LIGHT GRAY

INTERIOR WOOD DOORS AND TRIM
WHITE OAK, CLEAR FINISH, NO STAIN

MOVEABLE WALL (MW)
NOT USED

FINISH SCHEDULE ABBREVIATIONS

AFF	ABOVE FINISHED FLOOR	LAM	PLASTIC LAMINATE
ALSF	ALUMINUM STOREFRONT SYSTEM	MANUF	BY MANUFACTURER
ATC	ACOUSTIC TILE CEILING	MAT	ENTRY MAT
CB	CEMENT BOARD	MR	MOISTURE RESISTANT
CONC/S	CONCRETE SEALED AND HARDENED WITH BROOM FINISH	MTL	METAL PANEL
		MW	MOVABLE WALL
		NA	NOT APPLICABLE
		P	PAINT
CPT	CARPET	PREFIN	PREFINISHED
CT	CERAMIC TILE	RB	RESILIENT BASE
EP	EPOXY PAINT	RBP	RACQUETBALL PANEL
EXPOSED	EXPOSED STRUCTURE	VCT	VINYL COMPOSITION TILE
GN	GENERAL NOTE	MT	MARBLE TILE
GWB	GYPSUM WALL BOARD	MTD	METALLIC DOOR
HM	HOLLOW METAL	WD	WOOD DOOR
		TT	TERRAZZO TILE
		PVC	POLYVINYL

GENERAL NOTES

1. THE MANUFACTURER'S NAMES AND THEIR PRODUCTS REFERENCED ONLY INDICATE THE COLOR, TEXTURE, AND PATTERN REQUIRED FOR THE MATERIALS LISTED. THE PRODUCTS FURNISHED SHALL MEET THE COLOR, TEXTURE, AND PATTERN INDICATED AS WELL AS THE MATERIAL QUALITY AND PERFORMANCE SPECIFIED IN THE APPLICABLE TECHNICAL SPECIFICATIONS. THE USE OF MANUFACTURER'S NAMES AND PRODUCTS DO NOT PRECLUDE THE USE OF OTHER MANUFACTURER'S PRODUCTS OF APPROVED EQUAL COLOR, TEXTURE, AND/OR PATTERN IF ALL OTHER REQUIREMENTS ARE MET.
2. ALL VISIBLE GRILLES, DIFFUSERS, AND OTHER MECHANICAL RELATED FINISH OPENING DEVICES INCLUDING FIRE ALARMS SHALL BE PAINTED TO MATCH COLOR OF ADJACENT SURFACE.
3. REFER TO APPROPRIATE ARCHITECTURAL DRAWINGS AND DETAILS TO PROPERLY ASSESS THE FULL EXTENT OF WORK REQUIRED. SPECIFICALLY REFER TO THE REFLECTED CEILING PLANS AND BUILDING SECTIONS TO DETERMINE HEIGHTS OF REQUIRED WALL MATERIALS, SPECIAL CONDITIONS AND STRUCTURES, ETC.
4. REFER TO EXTERIOR ELEVATIONS FOR EXTERIOR FINISH SELECTIONS.
5. INFILL FLOOR AT SLAB RECESSES NOT TO RECEIVE CERAMIC TILE WITH CONCRETE LEVEL WITH ADJACENT FLOOR SURFACES PRIOR TO APPLYING FLOOR FINISH.
6. WALL AND CEILING GWB SURFACES SHALL BE PAINTED WITH FLAT FINISH, TRIM SHALL BE SEMI–GLOSS.
7. INSTALL PLASTIC BUMPER RAILS AND CORNER GUARDS AT MAIN CORRIDORS
8. INTERIOR SURFACE OF EXTERIOR METAL DOORS AND FRAMES SHOULD COMPLY WITH P–4

NOTE:
NOT ALL FINISHES APPLY TO ALL BUILDINGS.

REV	DATE	BY	SUB	APP	DESCRIPTION
0	06/30/10				SITE ADAPT CONSTRUCTION PLANS

DESIGNED N. SPAHIC
DRAWN C. JUNG
CHECKED J. ANDERSON
IN CHARGE D. WHEELER
DATE 30 JUNE 2010

AFGHAN NATIONAL SECURITY FORCE
COMPREHENSIVE PLAN FOR FACILITIES DEVELOPMENT
MINISTRY OF INTERIOR (MoI) – AFGHAN NATIONAL POLICE
PROVINCIAL FIRE STATION – TYPE–B
WELL HOUSE ROOM FINISH SCHEDULE

SCALE AS SHOWN
PROJECT NO. 6151–08–0328
08–A–602

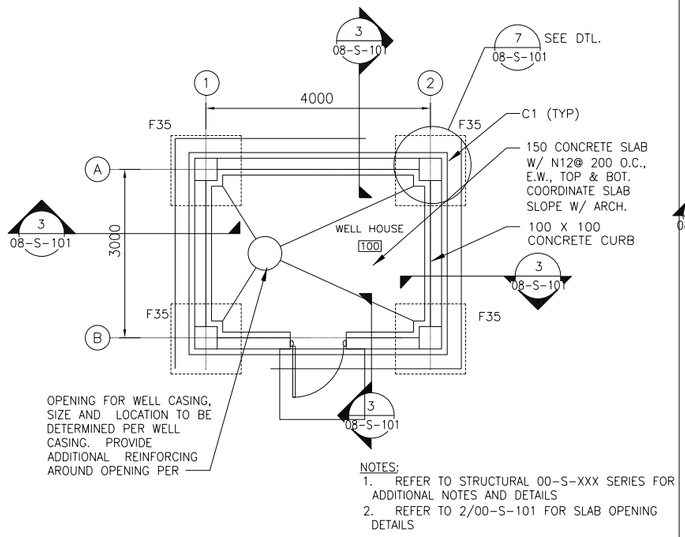

NOTES:
1. REFER TO STRUCTURAL 00-S-XXX SERIES FOR ADDITIONAL NOTES AND DETAILS
2. REFER TO 2/00-S-101 FOR SLAB OPENING DETAILS

1 FOUNDATION PLAN
08-S-101 SCALE: 1:50

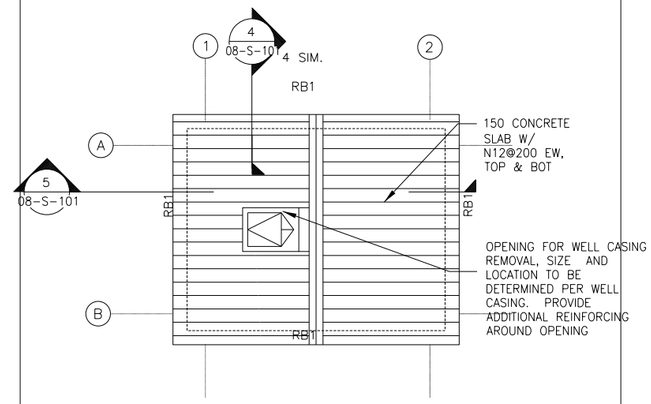

2 ROOF FRAMING PLAN
08-S-101 SCALE: 1:50

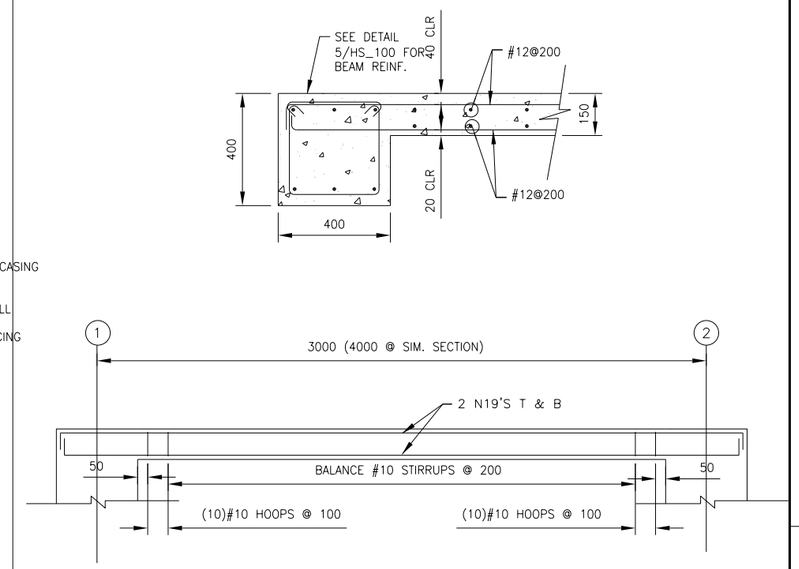

A SECTION
08-S-101 SCALE: NTS

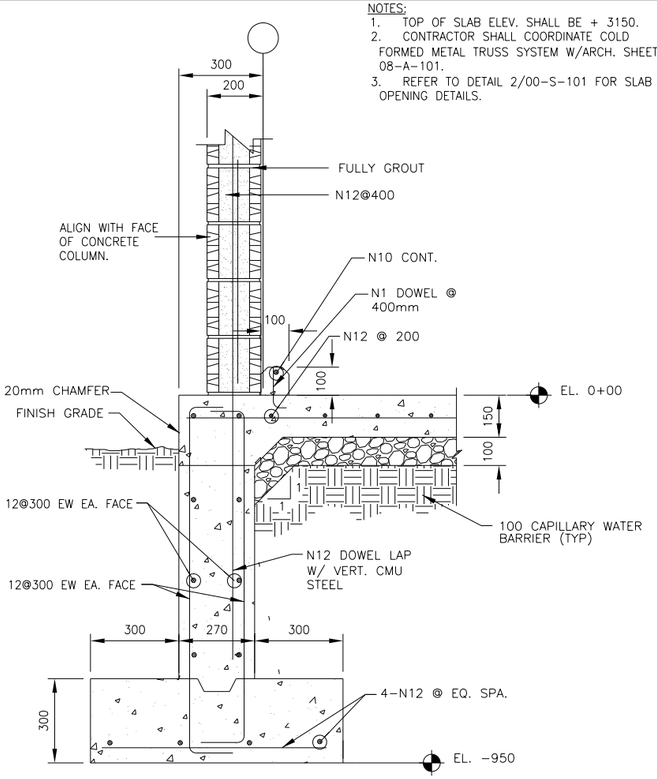

NOTES:
1. TOP OF SLAB ELEV. SHALL BE + 3150.
2. CONTRACTOR SHALL COORDINATE COLD FORMED METAL TRUSS SYSTEM W/ARCH. SHEET 08-A-101.
3. REFER TO DETAIL 2/00-S-101 FOR SLAB OPENING DETAILS.

NOTE:
1. EXTEND HORIZONTAL STEM WALL STEEL INTO COLUMNS. PROVIDE 90° HOOKS.

B SECTION
08-S-101 SCALE: NTS

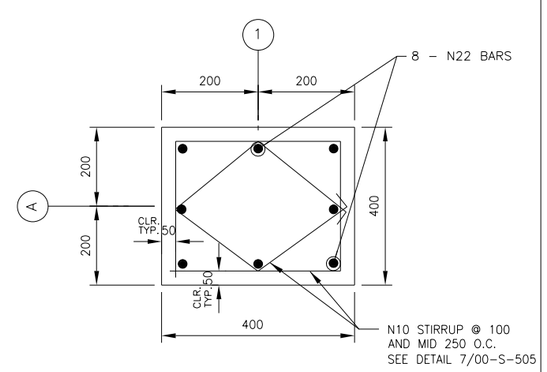

C COLUMN DETAIL
08-S-101 SCALE: NTS

NOTES:
COL. REINF. NOT SHOWN FOR CLARITY.
N10 STIRRUPS SHALL BE CLOSED W/ 135° SEISMIC HOOK
TOP AND BOTTOM LONG BARS SHALL EXTEND INTO COLUMN. PROVIDE 90° HOOKS TOP & BOTTOM.

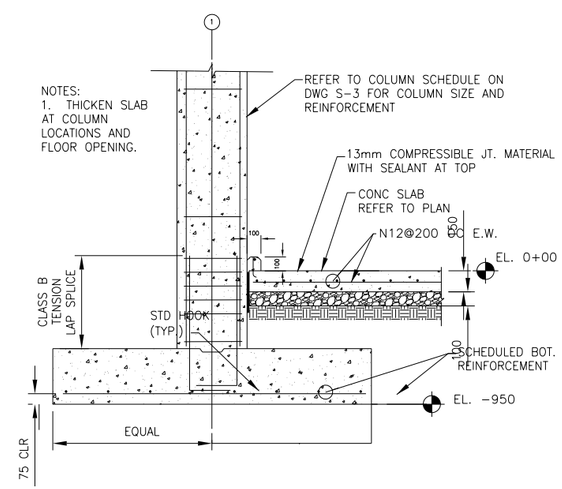

D TYP. COLUMN FOOTING DETAIL
08-S-101 SCALE: NTS

REV	DATE	BY	SUB/APP	DESCRIPTION
0	06/30/10			SITE ADAPT CONSTRUCTION PLANS

DESIGNED V. SLEGMEIR
DRAWN M. LORENZ
CHECKED M. GARVER
IN CHARGE D. WHEELER
DATE 30 JUNE 2010

AFGHAN NATIONAL SECURITY FORCE COMPREHENSIVE PLAN FOR FACILITIES DEVELOPMENT

MINISTRY OF INTERIOR (MoI) - AFGHAN NATIONAL POLICE PROVINCIAL FIRE STATION - TYPE-B

FOUNDATION, ROOF FRAMING PLAN, DETAILS & SCHEDULES

SCALE AS SHOWN

PROJECT NO. 6151-08-0328

08-S-101

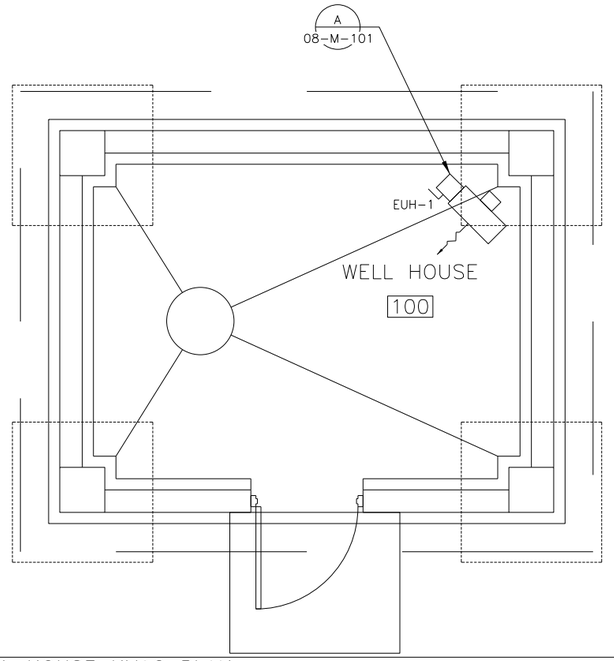

1 WELL HOUSE HVAC PLAN
08-M-101 1:25

ELECTRIC UNIT HEATER SCHEDULE											
NO.	BASIS OF DESIGN	VOLTAGE (V)	PHASE	NOMINAL WATTAGE (Kw)	BTU/hr	TOTAL CURRENT (A)	AIR DELIVERY		AIR TEMPERATURE RISE		REMARKS
							CFM	l/s	°F	°C	
EUH-1	RUFFNECK FE1	380	3	2.5	8,550	3.8	400	189	14.3	7.9	1

REMARKS:
1. PROVIDE WITH UNIT MOUNTED, FACTORY INSTALLED STARTER, DISCONNECT, AND THERMOSTAT.

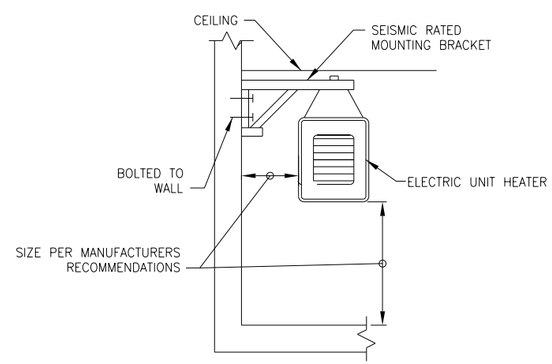

A ELECTRIC UNIT HEATER DETAIL
08-M-101 N.T.S.

REV	DATE	BY	SUB/APP	DESCRIPTION
0	06/30/10			SITE ADAPT CONSTRUCTION PLANS

DESIGNED W. FLEISHER
DRAWN C. JUNG
CHECKED J. MARIANETTI
IN CHARGE D. WHEELER
DATE 30 JUNE 2010

AFGHAN NATIONAL SECURITY FORCE
COMPREHENSIVE PLAN FOR FACILITIES DEVELOPMENT
MINISTRY OF INTERIOR (MoI) – AFGHAN NATIONAL POLICE
PROVINCIAL FIRE STATION – TYPE-B
WELL HOUSE MECHANICAL HVAC PLAN

SCALE AS SHOWN
PROJECT NO. 6151-08-0328
08-M-101

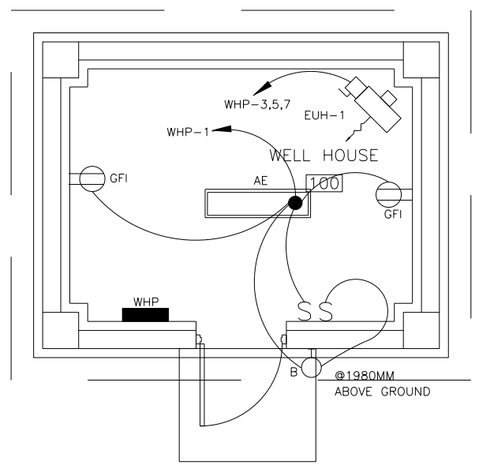

0 300 600 1200
SCALE: 1:50

1 WELL HOUSE ELECTRICAL PLAN

08-E-101 SCALE : 1:30

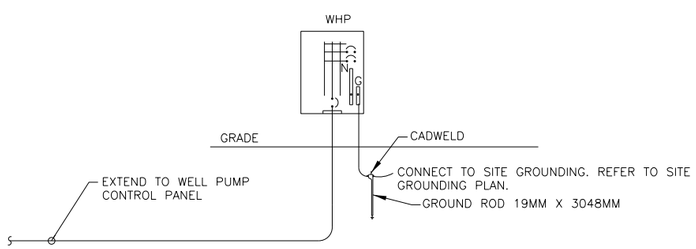

A POWER RISER DIAGRAM

08-E-101 SCALE : N.T.S.

GENERAL NOTES:

1. SEE SHEET 00-E-001 AND 00-E-002 FOR LEGEND, ABBREVIATIONS AND GENERAL NOTES.
2. COORDINATE MECHANICAL AND PLUMBING EQUIPMENT WITH MECHANICAL AND PLUMBING DRAWINGS.
3. ALL EXPOSED INTERIOR CONDUITS SHALL BE RGS THREADED (TYPICAL FOR INTERIORS).
4. PANEL BOARD WHP SHALL BE SUITABLE FOR USE AS SERVICE EQUIPMENT WITH NEMA 1R ENCLOSURE.

PANEL: WHP | TYPE: MAIN BREAKER | K.A.I.C: 18,000 MIN. | MOUNTING: SURFACE
VOLTAGE: 380/220V,3ø,4W | MAINS: 60 AMPS | ENTRY: BOTTOM | LOCATION: WELL HOUSE

POLE	TRIP	CONDUCTORS MM²	CONDUIT	DESIGNATION	KVA	NO	PHASE ØA	PHASE ØB	PHASE ØC	NO	KVA	DESIGNATION	CONDUIT	CONDUCTORS MM²	TRIP	POLE
1	20A	2#4+#4GND	21MM	LIGHTING & RECEPT.	0.6	1	0.6			2		TVSS	21 MM	3#6+#6GND	30A	3
3	20A	3#4+#4GND	21MM	EUH-1	.85	3		.85		4						
					.85	5			.85	6						
					.85	7	.85			8		SPARE			20A	1
1	20A			SPARE		9				10		SPARE			20A	1
1	20A			SPARE		11				12		SPARE			20A	1
1	20A			SPARE		13				14		SPARE			20A	1
1	20A			SPARE		15				16		SPACE				
				SPACE		17				18		SPACE				
				SPACE		19				20		SPACE				
				SPACE		21				22		SPACE				
				SPACE		23				24		SPACE				
				SPACE		25				26		SPACE				
				SPACE		27				28		SPACE				
				SPACE		29				30		SPACE				
					TOTAL:		1.5	0.85	0.85	3.2 KVA /.66 X 1.25 =6.1 AMPS USE 60 AMP PANEL						

LIGHTING FIXTURE SCHEDULE

MARK	LAMPS	VOLTAGE	FIXTURE DESCRIPTION	MOUNTING	NOTES
AE	3-T832W	220	SURFACE MOUNTED FLUORESCENT WRAP AROUND ACRYLIC LENS WITH HPF ELECTRONIC BALLAST AND EMERGENCY BATTERY BACKUP	SURFACE	
B	1-70MH	220	WALL MOUNTED HID AREA FLOOD LIGHT WITH DARK BRONZE ALUMINUM HOUSING, HPF BALLAST AND TEMPERED GLASS LENS.	BRACKET	

REV	DATE	BY	SUB'APP	DESCRIPTION
0	06/30/10			SITE ADAPT CONSTRUCTION PLANS

DESIGNED M. ESTANAFOUS
DRAWN L. KRAVCHUK
CHECKED B. CRAWFORD
INCHARGE D. WHEELER
DATE 30 JUNE 2010

AFGHAN NATIONAL SECURITY FORCE
COMPREHENSIVE PLAN FOR FACILITIES DEVELOPMENT
MINISTRY OF INTERIOR (MoI) – AFGHAN NATIONAL POLICE
PROVINCIAL FIRE STATION – TYPE-B
WELL HOUSE ELECTRICAL PLANS, SCHEDULES & DETAILS

SCALE AS SHOWN
PROJECT NO. 6151-08-0328
08-E-101

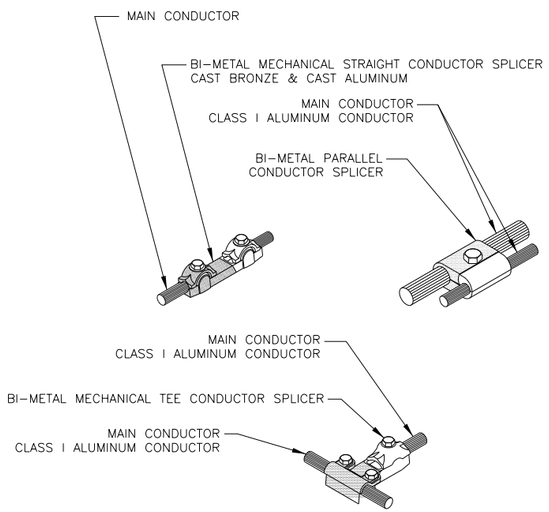

A BI-METAL CABLE CLAMPS AND SPLICERS

08-E-102 NOT TO SCALE

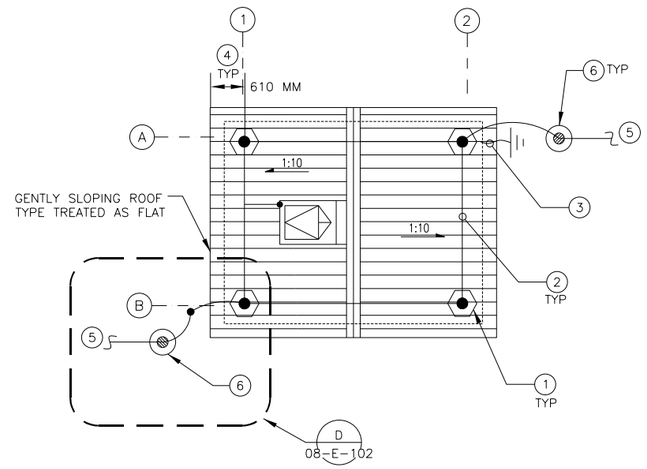

0 500 1000 2000

SCALE: 1:50

1 WELL HOUSE ROOF PLAN LIGHTINING PROTECTION PLAN

08-E-102 SCALE : 1:50

GENERAL NOTES:

1. SEE SHEET 00-E-001 AND 00-E-002 FOR LEGEND, ABBREVIATIONS AND GENERAL NOTES.
2. CLASS I COMPONENTS SHALL APPLY FOR THE WELL HOUSE, HEIGHT IS NOT MORE THAN 23M (75 FEET).
3. ALL LIGHTNING PROTECTION CONDUCTORS SHALL BE FASTENED NOT MORE THAN 914.4MM (3 FEET) MAXIMUM SPACING.
4. CONDUCTORS SHALL INTERCONNECT ALL AIR TERMINALS AND SHALL FORM A TWO-WAY PATH FROM EACH AIR TERMINAL HORIZONTALLY OR DOWNWARD TO CONNECTORS WITH GROUND RODS.
5. THE INSTALLATION OF THE LIGHTNING PROTECTION SYSTEM SHALL MEET THE REQUIREMENTS OF NATIONAL FIRE PROTECTION ASSOCIATION 780 AND UNDER WRITERS LAB UL96/96A.
6. AIR TERMINALS SHALL NOT BE LESS THAN 254MM (10 INCHES) LONG ABOVE THE OBJECT TO BE PROTECTED WHEN THE INTERVAL BETWEEN AIR TERMINALS IS NOT MORE THAN 6M (20 FEET).
7. AIR TERMINALS SHALL BE PLACED ON ALL CHIMNEYS, VENTS, AND ROOF TOP METAL BODIES WHEN SUCH CHIMNEYS, VENTS OR ROOF TOP METAL BODIES ARE NOT WITHIN A ZONE OF PROTECTION.
8. AT LEAST TWO DOWN CONDUCTORS SHALL BE INSTALLED.
9. RADIUS OF BEND SHALL NOT BE LESS THAN 203MM (8 INCHES).
10. PROVIDE #70MM² (#2/0 AWG) COPPER GROUNDING CONDUCTORS FOR THE LIGHTNING PROTECTION GROUNDING. ALL EXTERIOR GROUNDING CONDUCTORS SHALL BE BURIED A MINIMUM OF 762MM (30") BELOW GRADE OR 152.4MM (6") BELOW FROST LINE, WHICHEVER IS GREATER.

KEY NOTES:

(1) AIR TERMINAL SHALL BE 12.7MMX457MM (1/2" X 18") ALUMINUM, 90 DEGREES VERTICAL. SEE DETAIL B/08-E-102.

(2) MAIN CONDUCTORS SHALL BE 28 STRAND, 14 GAUGE CLASS 1 ALUMINUM ROOF CABLE, 58.9 KG/304.8M (130 POUNDS/1000 FEET), 15.875 MM DIAMETER, 70 MM² (#1/0).

(3) ALUMINUM DOWN CONDUCTORS SHALL BE CONNECTED TO COPPER DOWN CONDUCTOR AT LEAST 457MM (18 INCHES) ABOVE GRADE LEVEL. BIMETALLIC CONNECTORS WILL BE USED. SEE DETAILS B ON THIS SHEET FOR BIMETALLIC CONNECTORS.

(4) 610 MM (2 FEET) MAXIMUM SPACING FROM RIDGE END.

(5) SEE SHEET 00-E-102 FOR CONTINUATION TO SITE GROUNDING PLAN.

(6) PROVIDE AND INSTALL 19MMX3048MM (3/4" X 10'-0") COPPER CLAD STEEL GROUND RODS. IF ROCK IS ENCOUNTERED, GROUND ROD MAY BE INSTALLED WITH A MAXIMUM VARIATION OF 30 DEGREES FROM VERTICAL.

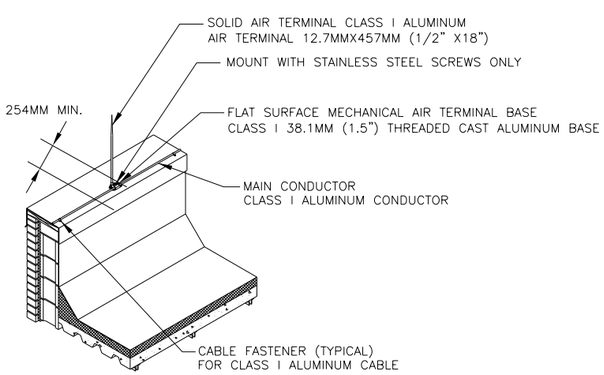

B AIR TERMINAL DETAIL

08-E-102 NOT TO SCALE

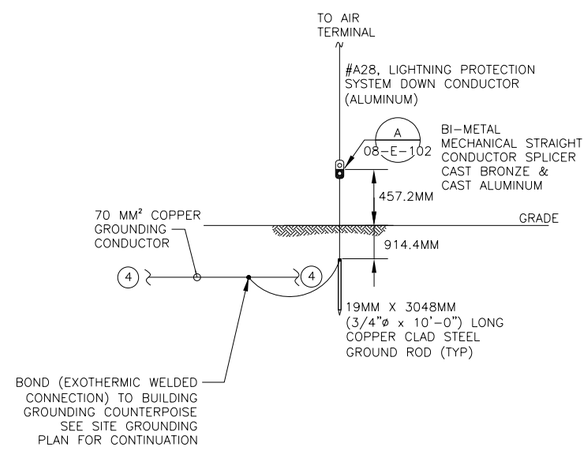

C BONDING LIGHTNING PROTECTION TO GROUNDING

08-E-102 NOT TO SCALE

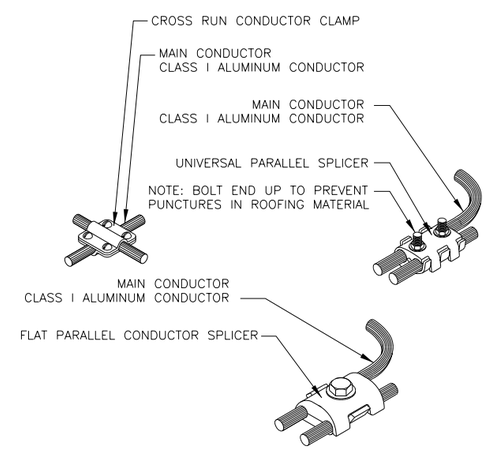

D CABLE CLAMPS AND SPLICERS

08-E-102 NOT TO SCALE

REV	DATE	BY	SUB	APP	DESCRIPTION
0	06/30/10				SITE ADAPT CONSTRUCTION PLANS

DESIGNED M. ASHKAR/ANOUS
DRAWN L. KRAVCHUK
CHECKED B. CRAWFORD
IN CHARGE D. WHEELER
DATE 30 JUNE 2010

AFGHAN NATIONAL SECURITY FORCE
COMPREHENSIVE PLAN FOR
FACILITIES DEVELOPMENT

MINISTRY OF INTERIOR (MoI) – AFGHAN NATIONAL POLICE
PROVINCIAL FIRE STATION – TYPE-B

WELL HOUSE LIGHTNING PROTECTION PLAN

SCALE
AS SHOWN

PROJECT NO.
6151-08-0328

08-E-102