AMENDMENT OF SOLICITATION/MODIFICATION OF CONTRACT

1. CONTRACT ID CODE		PAGE OF PAGES	1 | 2
2. AMENDMENT/MODIFICATION NO. 0001	3. EFFECTIVE DATE 17-Oct-2010	4. REQUISITION/PURCHASE REQ. NO. W917PM02492611	5. PROJECT NO.(If applicable) 10-E017

6. ISSUED BY CODE W5J9JE

AFGHANISTAN DISTRICT NORTH (AEN)
US ARMY CORPS OF ENGINEERS
OPERATION ENDURING FREEDOM
APO AE 09356

7. ADMINISTERED BY (If other than item 6) CODE

See Item 6

8. NAME AND ADDRESS OF CONTRACTOR (No., Street, County, State and Zip Code)

CODE FACILITY CODE

X	9A. AMENDMENT OF SOLICITATION NO. W5J9JE-10-R-0119
X	9B. DATED (SEE ITEM 11) 11-Oct-2010
	10A. MOD. OF CONTRACT/ORDER NO.
	10B. DATED (SEE ITEM 13)

11. THIS ITEM ONLY APPLIES TO AMENDMENTS OF SOLICITATIONS

[The] above numbered solicitation is amended as set forth in Item 14. The hour and date specified for receipt of Offer [ ] is extended, [X] is not extended.

Offer must acknowledge receipt of this amendment prior to the hour and date specified in the solicitation or as amended by one of the following methods: (a) By completing Items 8 and 15, and returning 1 copies of the amendment; (b) By acknowledging receipt of this amendment on each copy of the offer submitted; or (c) By separate letter or telegram which includes a reference to the solicitation and amendment numbers. FAILURE OF YOUR ACKNOWLEDGMENT TO BE RECEIVED AT THE PLACE DESIGNATED FOR THE RECEIPT OF OFFERS PRIOR TO THE HOUR AND DATE SPECIFIED MAY RESULT IN REJECTION OF YOUR OFFER. If by virtue of this amendment you desire to change an offer already submitted, such change may be made by telegram or letter, provided each telegram or letter makes reference to the solicitation and this amendment, and is received prior to the opening hour and date specified.

12. ACCOUNTING AND APPROPRIATION DATA (If required)

13. THIS ITEM APPLIES ONLY TO MODIFICATIONS OF CONTRACTS/ORDERS. IT MODIFIES THE CONTRACT/ORDER NO. AS DESCRIBED IN ITEM 14.

[ ] A. THIS CHANGE ORDER IS ISSUED PURSUANT TO: (Specify authority) THE CHANGES SET FORTH IN ITEM 14 ARE MADE IN THE CONTRACT ORDER NO. IN ITEM 10A.

[X] B. THE ABOVE NUMBERED CONTRACT/ORDER IS MODIFIED TO REFLECT THE ADMINISTRATIVE CHANGES (such as changes in paying office, appropriation date, etc.) SET FORTH IN ITEM 14, PURSUANT TO THE AUTHORITY OF FAR 43.103(B).

[ ] C. THIS SUPPLEMENTAL AGREEMENT IS ENTERED INTO PURSUANT TO AUTHORITY OF:

[ ] D. OTHER (Specify type of modification and authority)

E. IMPORTANT: Contractor [ ] is not, [x] is required to sign this document and return 1 copies to the issuing office.

14. DESCRIPTION OF AMENDMENT/MODIFICATION (Organized by UCF section headings, including solicitation/contract subject matter where feasible.)

The purpose of this modification is to amend Solicitation number W5J9JE-10-R-0119 to include Appendix B-1 Site Plan and Appendix B-2 Drawings.

See the following page for details.

Except as provided herein, all terms and conditions of the document referenced in Item 9A or 10A, as heretofore changed, remains unchanged and in full force and effect.

15A. NAME AND TITLE OF SIGNER (Type or print)		16A. NAME AND TITLE OF CONTRACTING OFFICER (Type or print) TEL: 540 722.4435 EMAIL: daisy.l.dubose@usace.mil	
15B. CONTRACTOR/OFFEROR (Signature of person authorized to sign)	15C. DATE SIGNED	16B. UNITED STATES OF AMERICA BY (Signature of Contracting Officer)	16C. DATE SIGNED 17-Oct-2010

SECTION SF 30 BLOCK 14 CONTINUATION PAGE

SUMMARY OF CHANGES

1. All other terms and conditions remain unchanged.

2. Contact Ms. Daisy DuBose with any questions related to this modification.

(End of Summary of Changes)

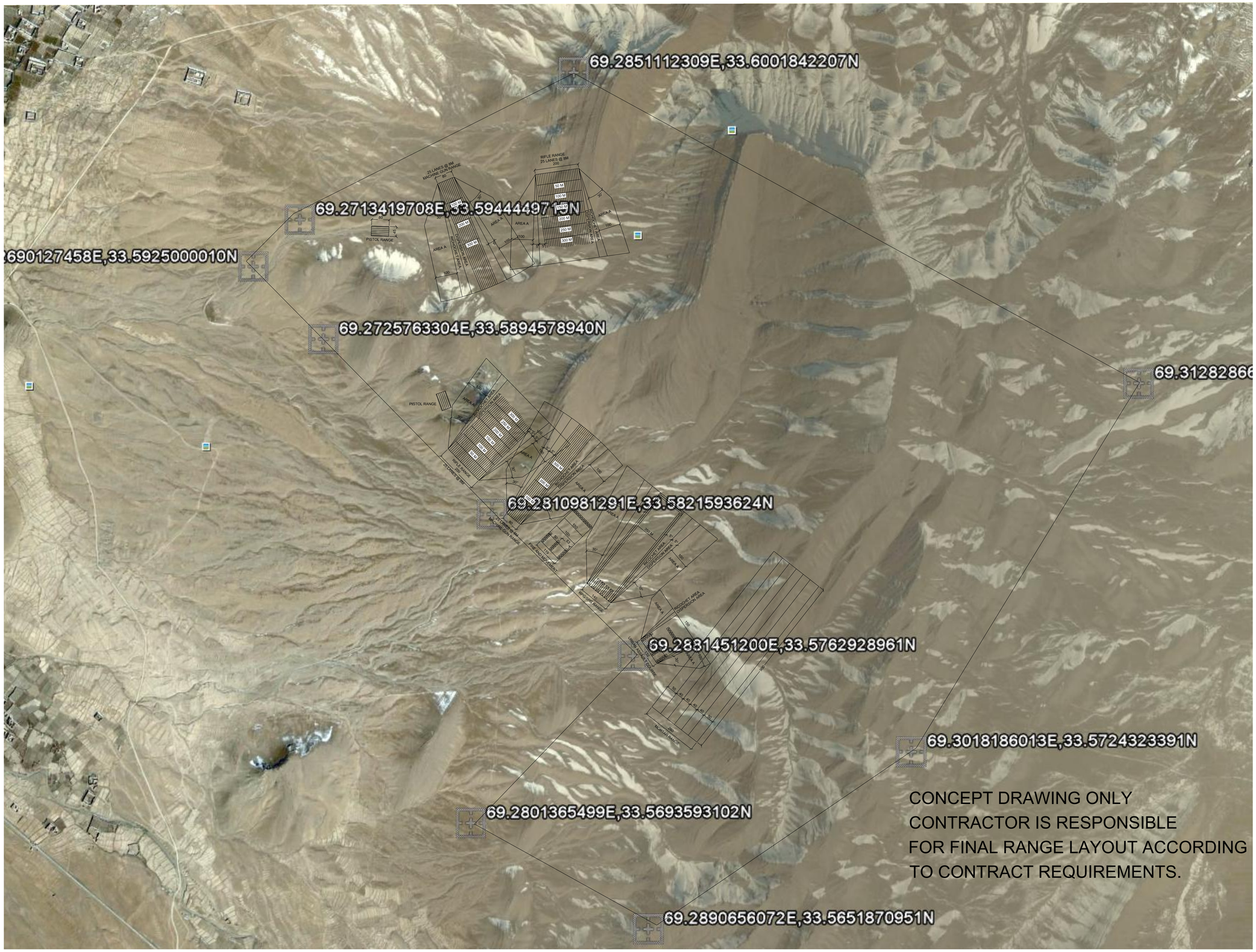

US ARMY CORPS
OF ENGINEERS
AFGHANISTAN NORTH
DISTRICT

SYMBOL	DESCRIPTION	DATE	APPR.	SYMBOL	DESCRIPTION	DATE	APPR.

U.S. ARMY ENGINEER DISTRICT, AFGHANISTAN
CORPS OF ENGINEERS
APO AE 96338

DESIGNED BY:
DWN BY:
CKD BY:
REVIEWED BY:
SUBMITTED BY:
DATE: XX-XX-XX
DESIGN FILE NO.
DRAWING CODE:
FILE NAME:
PLOT SCALE:
PLOT DATE: XX-XX-XX
REV. ___

PROJECT NO.XXXX
PROJECT TITLE
INSTALLATION NAME

CORPS TRAINING RANGE

SHEET
REFERENCE
NUMBER:

C-001

A1 Size 594mm x 841mm

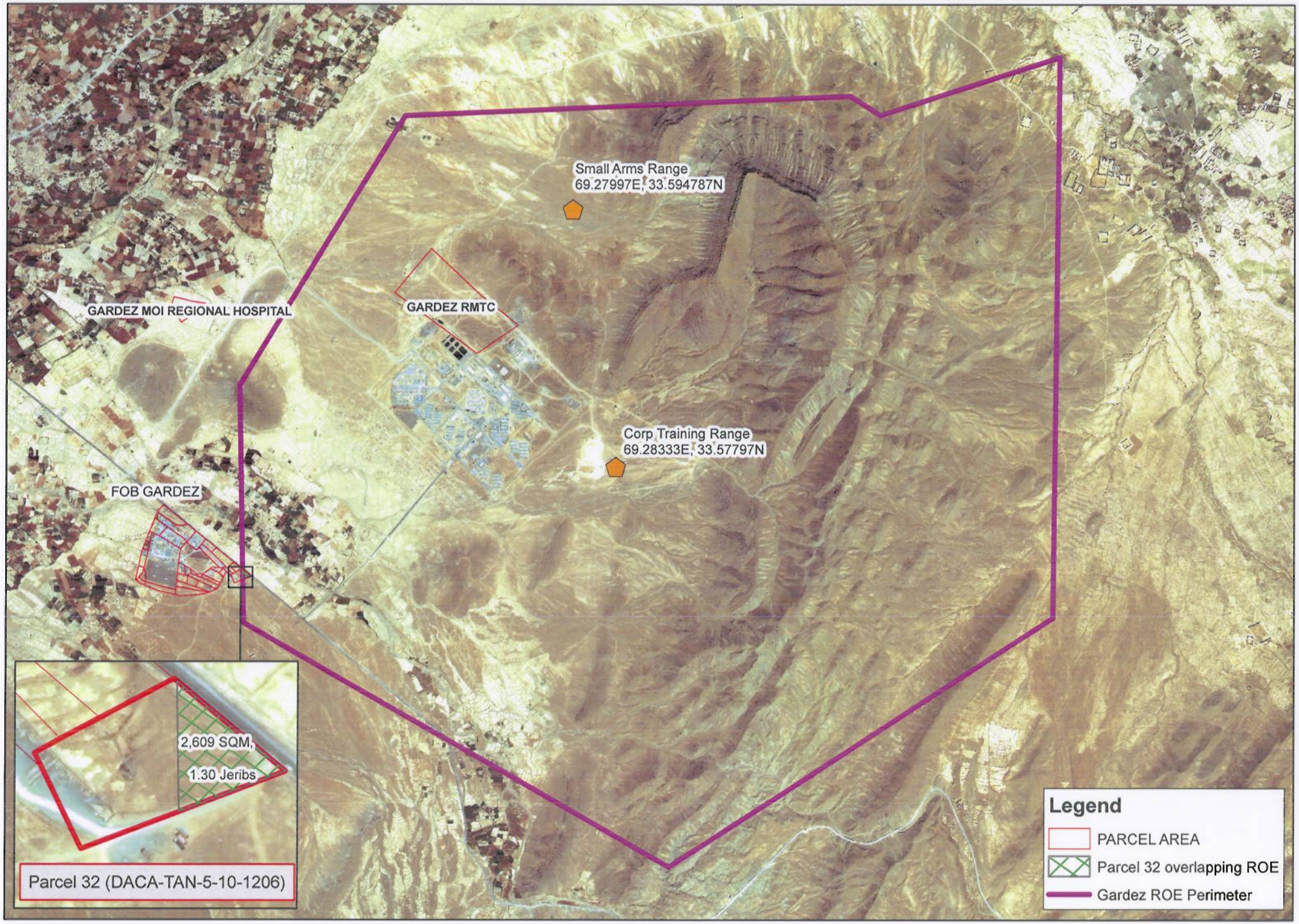

GARDEZ ROE & PARCELS

0 0.5 1 2 3 4 Kilometers

S:\Real Estate\GIS\Gardez_SA_CTR_ROE.mxd

Sensitive but Unclassified - Not to be distributed to Contractors or Local Nationals

REAL ESTATE 6SEP 10

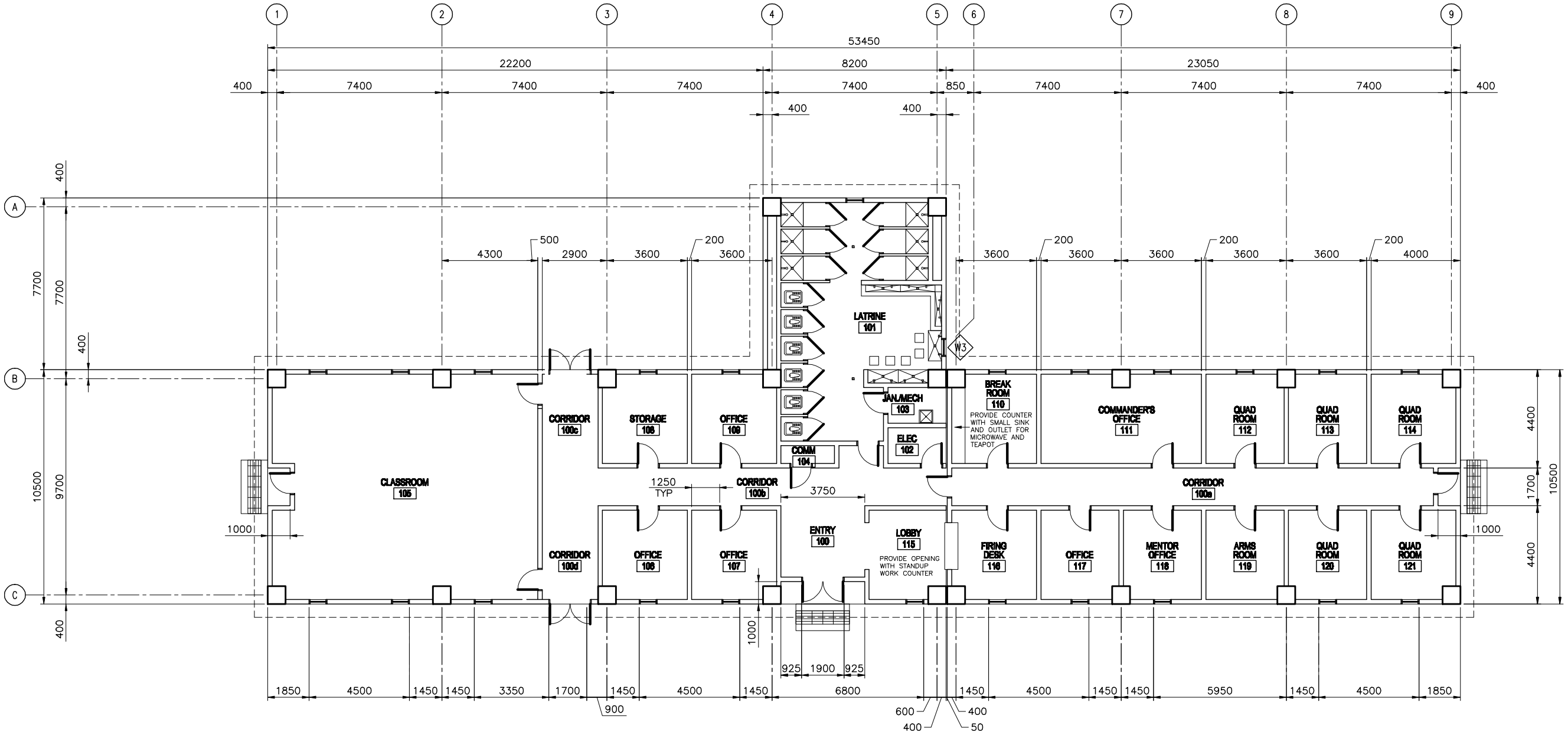

RANGE CONTROL / SECURITY OFFICE BLDG
PROPOSED FLOOR PLAN

SCALE: 1:200 (23 AUGUST 2010)

NOTE:

THE ONLY CHANGE BETWEEN THIS DRAWING AND THE ENCLOSED SITE–ADAPT STANDARD DESIGN DRAWINGS ARE THE REMOVAL OF SOME PARTITIONS, RELOCATION OF EGRESS CORRIDORS AND DOORS, ADDITION OF A COUNTERTOP AND SINK AT THE BREAK ROOM, AND A WORKTOP AND OPENING AT THE FIRING DESK. ALL OTHER DESIGN REQUIREMENTS AND SPECIFICATIONS REMAIN INTACT. THE CONTRACTOR SHALL SUBMIT FOR GOVERNMENT APPROVAL ALL ELECTRICAL, MECHANICAL, LIFE SAFETY AND COMMUNICATION DRAWINGS NECESSARY TO SHOW COORDINATION OF THESE DESIGNS PER THIS REVISED PLAN.

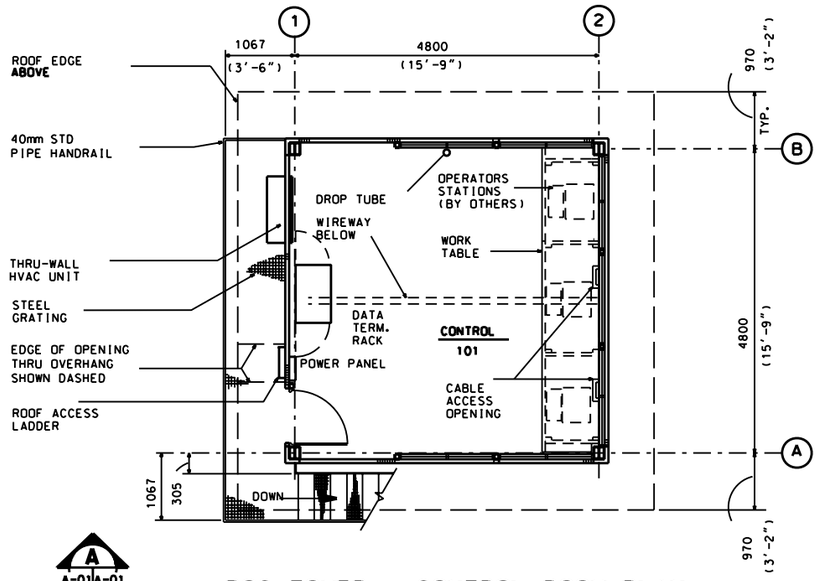

A A-01 A-01

ROC-TOWER - CONTROL ROOM PLAN

SCALE : 1:100

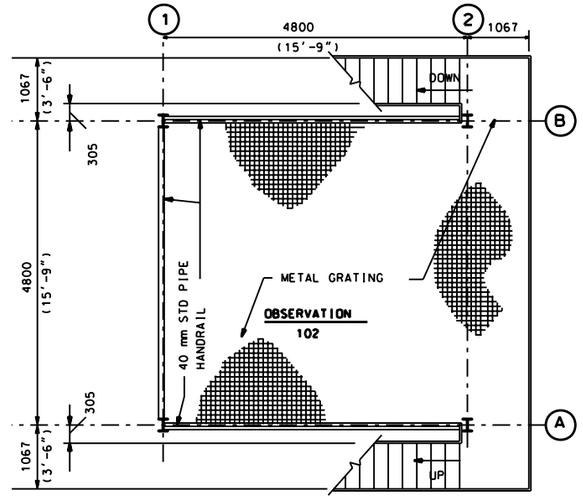

A A-01 A-01

OBSERVATION DECK

SCALE : 1:100

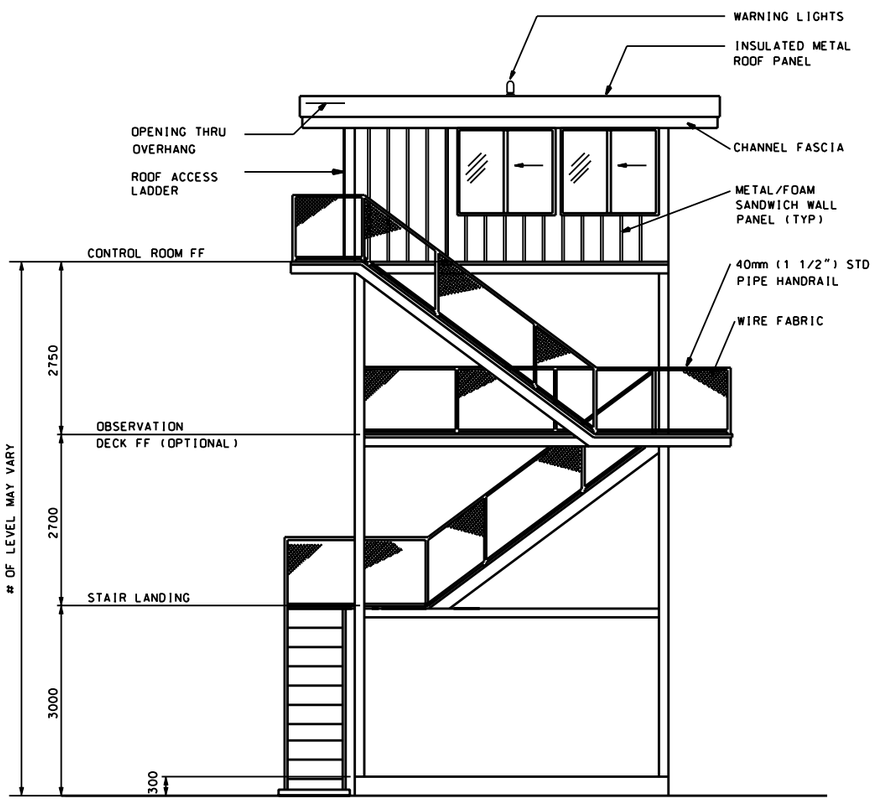

ELEVATION

SCALE : 1:100

A A-01 A-01

GENERAL

The Range Operations Center (ROC) Tower provides space for personnel conducting training exercises and space for the installation of the required electronics and communications equipment. An optional observation platform can be constructed below the control room. enclosure of this level is also an option. The occupant load factor is 9.3 net sq. meters (100 sq. feet) (per person) based on a business use. See NFPA 101 table 7.3.1.2. The height of the tower is based on providing line of sight to the firing line and down range areas where required. All dimensions not labeled are in millimeters.

SITE ADAPTATION

This standard definitive design should be adapted to local conditions such as climate, available construction materials and techniques, topography, seismic zone and the existing character of surrounding buildings. These factors may affect plans, elevations and building systems. The building foundation must be designed based on the results of a geotechnical investigation.

REFERENCE CRITERIA

The design and construction must comply with applicable codes and standards including: technical instruction TI 800-01, "Design Criteria"; Department of the Army regulations, technical manuals, handbooks, standards, and specifications; UFC, IBC, NEMA, ANSI/TIA/EIA, UL, ASTM, NFPA, ASHRAE, etc..

FUNCTIONAL REQUIREMENTS

A work surface is provided for monitors, computers, printers and associated equipment. Windows are fixed and horizontal sliding to meet functional requirements. Provide polycarbonate security glazing in the door. Ice guards may be necessary in northern climates. The tower is accessed only by able-bodied personnel and does not require ADA compliance unless dictated by local criteria.

MECHANICAL

The Mechanical Equipment shall be selected and sized based on site requirements, local weather design criteria, available energy sources, and building construction materials. U-Factor requirements are based on the local climatic conditions in accordance with TI 800-1. The mechanical system must be sized to maintain an equipment operating temperature of +23.3 C (74 F) +/- 2.25 C (4 F) in rooms containing range communication equipment. Obtain communication equipment heat release from targetry supplier for HVAC load calculations and equipment sizing. HVAC design for personnel comfort shall be in accordance with UFC 3-410-FA with the exception of the indoor design temperature for cooling, which shall be 24 C (75 F). The addition of a Mechanical Room may be necessary to accommodate certain types of mechanical equipment. Route ductwork to provide an even distribution of conditioned air throughout the building to meet occupant comfort and outdoor air requirements. Provide diffusers and dampers to allow for manual balancing. Provide a drain to prevent condensate dripping on observation level and stairs below.

ELECTRICAL

The Tower shall be served by 120/240V, 1 phase, 3-wire secondary power. Rigid Steel conduit shall extend a minimum of 1524mm (5') outside of the building foundation for power and communication circuits entering and leaving the building. Voltage drop shall comply with standards in NEC and Army technical manuals. Grounding will be installed in accordance with NFPA 70, the NEC, and other applicable standards.
Receptacles shall be general purpose, 120V, 20A Duplex mounted 450mm (18") above the finished floor. Provide 120/240V power for the HVAC unit.
Illumination levels will be designed in accordance with IES. Interior lighting shall consist of fluorescent lamps at a level of 50 foot-candles. Incandescent fixtures with red lamps on separate switching shall be placed near each fluorescent lamp in the Control Room and on exterior walls of entrance. Exterior lighting shall be provided with separate switching located near points of egress.
The emergency electrical system shall comply with NFPA 70 and NFPA 101. Emergency lighting shall be provided to ensure adequate illumination to egress building in the event of a power outage.
Lightning protection in accordance with NFPA 780 and UFC 3-570-01 is required for this building in the form of pole mast protection or air terminals on the building.

TELEPHONE

Telephone service is not a requirement for range operations. However, service should be provided to the ROC if it is available in the area.

TARGETRY SYSTEM INTERFACE

In addition to the targetry fiber, the targetry system requires a fiber optic connection between the ROC and the AAR if one is included. The number of the Data Termination Rack depends on the number of fiber terminations from other ROCA buildings, targetry, and cameras. Coordinate the number of Master Data Panels (Racks) with the Targetry Supplier. Only one type of cable media is allowed to be run into the DTR for range training systems. A fiber connection to an AAR may dictate that fiber optic cables must be used from the ROC - Tower to the first target.

FIRE PROTECTION

Fire protection is not required per fire codes for this building. Consult local Fire Marshall for compliance with local requirements.

GRAPHIC SCALES

1:100 1000 500 0 1000 2000

US Army Corps of Engineers

Rev.	Description	Date	Approved

Designed by: Dwn by: Ckd by: Reviewed by: Submitted by:
Date: 15 APR 05
Rev.
Design file no.
Drawing code:
File name:
Plot scale:
Plot date:

U.S. ARMY ENGINEERING AND SUPPORT CENTER, HUNTSVILLE
HUNTSVILLE, ALABAMA

4 MAY 2007

RANGE AND TRAINING LAND PROGRAM
STANDARD DESIGN MANUAL
RANGE OPERATIONS CENTER (ROC)
TOWER

Sheet reference number:
A -01

AFGHANISTAN NATIONAL ARMY
SITE ADAPT DESIGN
KANDAKS

CENTCOM AOR

NCO BARRACKS

US Army Corps
of Engineers
AFGHANISTAN ENGINEER DISTRICT

W912ER-09-D-0001
TASK ORDER 0014

FINAL SUBMITTAL
MAY 19, 2010

DRAWING INDEX

SHT REF NO	FILE NO.	REVISIONS LATEST SUBMITTAL	REVISIONS AM/COP NO.	TITLE
G-001	AF1024$-GI001GN	10-MAY-2010		COVER SHEET
G-002	AF1024$-GI002GN	10-MAY-2010		DRAWING INDEX
STRUCTURAL				
S-001	AF1024B-SS001GN	10-MAY-2010		GENERAL NOTES AND DESIGN CRITERIA
S-101	AF1024B-SB101PN	10-MAY-2010		FOUNDATION AND SLAB PLAN
S-102	AF1024B-SF102PN	10-MAY-2010		ROOF FRAMING PLAN
S-401	AF1024B-SS401SE	10-MAY-2010		BUILDING SECTIONS
S-402	AF1024B-SS402PN	10-MAY-2010		ENLARGED LATRINE SLAB PLAN
S-501	AF1024B-SB501SE	10-MAY-2010		FOUNDATION SECTIONS
S-502	AF1024B-SS502SE	10-MAY-2010		FOUNDATION AND FRAMING SECTIONS
S-503	AF1024B-SS503DT	10-MAY-2010		BEAM AND COLUMN DETAILS - SHEET 1
S-504	AF1024B-SS504DT	10-MAY-2010		BEAM AND COLUMN DETAILS - SHEET 2
S-505	AF1024B-SS505SE	10-MAY-2010		MISCELLANEOUS SECTIONS
S-601	AF1024B-SS601SC	10-MAY-2010		SCHEDULES
S-701	AF1024B-SS701DT	10-MAY-2010		TYPICAL DETAILS - SHEET 1
S-702	AF1024B-SS702DT	10-MAY-2010		TYPICAL DETAILS - SHEET 2
STRUCTURAL: REBAR REIFORCEMENT DRAWINGS				
S-801	AF1024B-SB801PN	10-MAY-2010		FOUNDATION AND SLAB PLAN
S-802	AF1024B-SF802PN	10-MAY-2010		ROOF FRAMING PLAN
S-803	AF1024B-SS803DT	10-MAY-2010		COLUMN AND SECTIONS DETAILS
S-804	AF1024B-SS804DT	10-MAY-2010		BEAM ELEVATIONS - SHEET 1
S-805	AF1024B-SS805DT	10-MAY-2010		BEAM ELEVATIONS - SHEET 2
S-806	AF1024B-SS806DT	10-MAY-2010		BEAM ELEVATIONS - SHEET 3
S-807	AF1024B-SS807DT	10-MAY-2010		BEAM ELEVATIONS - SHEET 4
S-808	AF1024B-SS808DT	10-MAY-2010		SHEAR WALL ELEVATIONS - SHEET 1
S-809	AF1024B-SS809DT	10-MAY-2010		SHEAR WALL ELEVATIONS - SHEET 2
S-810	AF1024B-SS810DT	10-MAY-2010		SHEAR WALL ELEVATIONS - SHEET 3
S-811	AF1024B-SS811DT	10-MAY-2010		SHEAR WALL ELEVATIONS - SHEET 4
S-812	AF1024B-SS812DT	10-MAY-2010		SHEAR WALL ELEVATIONS - SHEET 5
S-813	AF1024B-SS813DT	10-MAY-2010		ENLARGED SLAB PLAN - SHEET 1
S-814	AF1024B-SS814DT	10-MAY-2010		ENLARGED SLAB PLAN - SHEET 2
S-815	AF1024B-SS815DT	10-MAY-2010		BAR BEND DETAILS
ARCHITECTURAL				
A-001	AF1024B-AR001PN	10-MAY-2010		LIFE SAFETY PLAN
A-101	AF1024B-AR101PN	10-MAY-2010		OVERALL FLOOR PLAN
A-102	AF1024B-AR102PN	10-MAY-2010		ROOF PLAN
A-201	AF1024B-AR201EL	10-MAY-2010		EXTERIOR ELEVATIONS
A-301	AF1024B-AR301SC	10-MAY-2010		BUILDING SECTIONS
A-401	AF1024B-AR401SC	10-MAY-2010		WALL SECTIONS
A-402	AF1024B-AR402LS	10-MAY-2010		ENLARGED PLAN
A-501	AF1024B-AR501DT	10-MAY-2010		EXTERIOR DETAILS
A-502	AF1024B-AR502DT	10-MAY-2010		HEAD, JAMB, AND SILL DETAILS
A-503	AF1024B-AR503DT	10-MAY-2010		STOOP DETAILS
A-504	AF1024B-AR504DT	10-MAY-2010		TOILET, LAVATORY, AND ABLUTION DETAILS
A-505	AF1024B-AR505DT	10-MAY-2010		SHOWER DETAILS
A-506	AF1024B-AR506DT	10-MAY-2010		EXPANSION JOINT DETAILS
A-601	AF1024B-AR601DT	10-MAY-2010		WINDOW AND DOOR SCHEDULES
PLUMBING				
P-101	AF1024B-MP101PN	10-MAY-2010		PLUMBING PLANS
P-501	AF1024B-MP501DT	10-MAY-2010		PLUMBING DETAILS - SHEET 1
P-502	AF1024B-MP502DT	10-MAY-2010		PLUMBING DETAILS - SHEET 2
P-601	AF1024B-MP601SC	10-MAY-2010		PLUMBING SCHEDULES
P-901	AF1024B-MP901IS	10-MAY-2010		PLUMBING ISOMETRICS
MECHANICAL				
M-101	AF1024B-MH101PN	10-MAY-2010		
M-601	AF1024B-MH601SC	10-MAY-2010		MECHANICAL SCHEDULES
ELECTRICAL				
E-001	AF1024B-SE001GN	10-MAY-2010		ELECTRICAL SYMBOLS & ABBREVIATIONS
E-101	AF1024B-EL101PN	10-MAY-2010		ELECTRICAL LIGHTING PLAN
E-102	AF1024B-EP102PN	10-MAY-2010		ELECTRICAL POWER AND SYSTEMS PLAN
E-103	AF1024B-EP103PN	10-MAY-2010		ELECTRICAL LIGHTNING PROTECTION PLAN
E-501	AF1024B-SE501DT	10-MAY-2010		ELECTRICAL DETAILS - SHEET 1
E-502	AF1024B-SE502DT	10-MAY-2010		ELECTRICAL DETAILS - SHEET 2
E-601	AF1024B-SE601SC	10-MAY-2010		ELECTRICAL LIGHT FIXTURE SCHEDULE
E-602	AF1024B-SE602SC	10-MAY-2010		ELECTRICAL PANEL SCHEDULES - SHEET 1
E-603	AF1024B-SE603SC	10-MAY-2010		ELECTRICAL PANEL SCHEDULES - SHEET 2
E-604	AF1024B-SE604SC	10-MAY-2010		ELECTRICAL PANEL SCHEDULES - SHEET 3

US ARMY CORPS OF ENGINEERS
AFGHANISTAN ENGINEER DISTRICT

Mark	Description	Date	Appr.	Mark	Description	Date	Appr.

Designed by: Date: 5/19/10 Rev: 0
Dwn by: Ckd by: Design file no.
Reviewed by: Drawing code:
Submitted by: File name: AF1024B-GI002GN Plot date: 20100606 Plot scale:

U.S. ARMY ENGINEER DISTRICT, AFGHANISTAN
CORPS OF ENGINEERS
APO AE 96338

STANDARD DESIGN
VARIOUS PROJECTS
VARIOUS LOCATIONS, AFGHANISTAN

NCO BARRACKS

DRAWING INDEX

SHEET REFERENCE NUMBER:
B
G-002

R:\ENGINEERING\26 STANDARD DESIGNS\A-E STANDARD DESIGNS\NCO BARRACKS\AF1024$-GI002GN.DWG

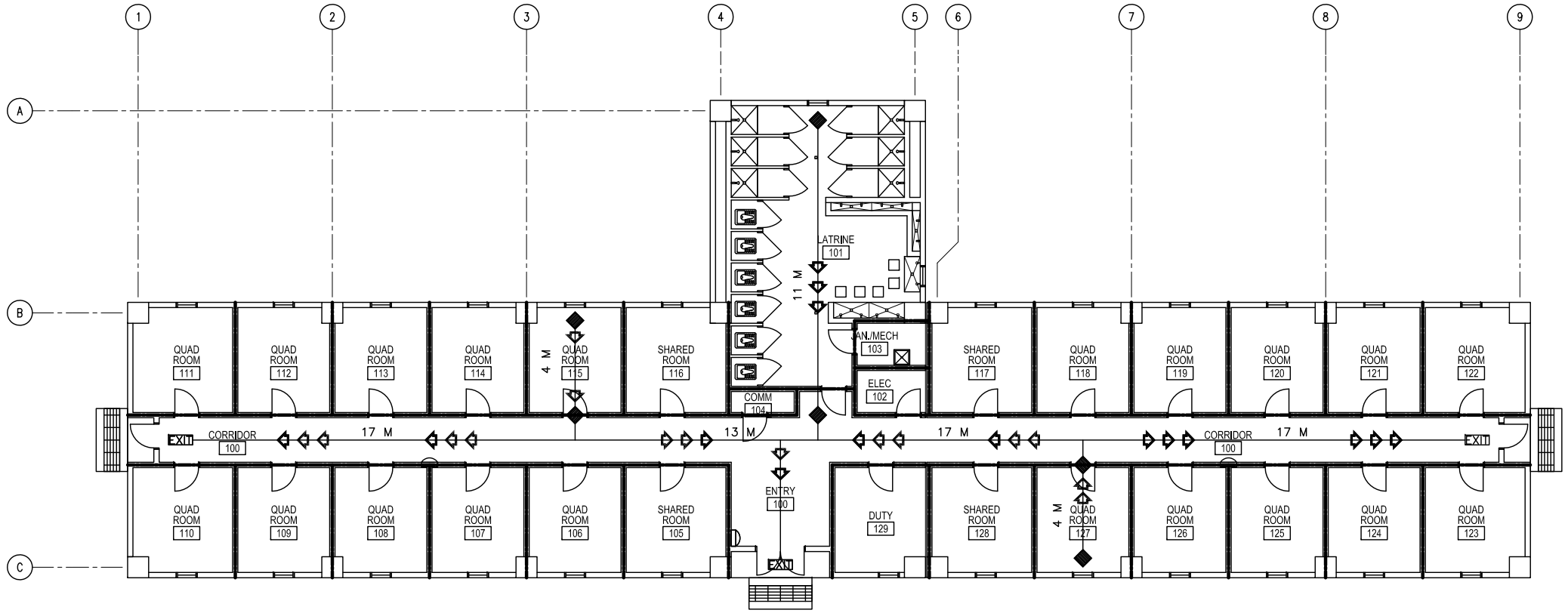

LIFE SAFETY PLAN
SCALE: 1:100

LEGEND:

- DENOTES PATHS OF EXIT TRAVEL
- EXIT — DENOTES DOOR AS AN EMERGENCY EXIT
- DENOTES STARTING POINT FOR TRAVEL DISTANCE
- DENOTES FIRE EXTINGUISHER LOCATIONS
- 1– HOUR RATED WALL

CODE ANALYSIS:

1. REFERENCES:
   2006 INTERNATIONAL BUILDING CODE (2006 IBC)
   2006 LIFE SAFETY CODE (2006 NFPA 101)
   2006 NFPA 10 – STANDARD FOR PORTABLE FIRE EXTINGUISHERS.

2. IBC OCCUPANCY CLASSIFICATION:
   GROUP R–2 (NEW HOTELS AND DORMITORIES NFPA 101 6.1.8 AND CHAPTER 28)

3. TYPE OF CONSTRUCTION (IBC): TYPE II–B (UNPROTECTED/NONSPRINKLERED)

4. IBC TABLE 503: ALLOWABLE HEIGHT AND BUILDING AREAS:
   GROUP R–2
   ALLOWABLE AREA: 1486 SM
   ALLOWABLE HEIGHT: 4 STORIES (16 M)

   GROUP R–2
   PROPOSED AREA: 625 SM
   PROPOSED HEIGHT: 1 STORY (<16 M)

5. IBC TABLE 601 & 602: FIRE RESISTANCE RATING REQUIREMENTS FOR BUILDING ELEMENTS FOR TYPE II–B

BUILDING ELEMENT	RATING (HOUR)	REFERENCE
STRUCTURAL FRAME (COLUMNS, GIRDERS & TRUSSES)	0	TABLE 601
BEARING WALLS		
EXTERIOR	0	TABLE 601
INTERIOR	0	TABLE 601
NONBEARING WALLS & PARTITIONS		
INTERIOR	0	TABLE 601
FLOOR CONSTRUCTION	0	TABLE 601
ROOF CONSTRUCTION	0	TABLE 601
EXTERIOR WALL	0	TABLE 602

6. IBC TABLE 803.5 – INTERIOR WALL AND CEILING FINISH REQUIREMENTS FOR R–2 OCCUPANCY/NONSPRINKLERED

GROUP	EXIT ENCLOSURES AND EXIT PASSAGEWAY	CORRIDORS	ROOMS AND ENCLOSED SPACES
R–2	B	B	C

7. NFPA 101 TABLE 7.3.1.2 – OCCUPANT LOAD
   HOTELS AND DORMITORIES = 18.6 SM/PERSON CALCULATED = 34 OCCUPANTS
   ACTUAL = 88 OCCUPANTS

8. NFPA 101 TABLE 7.3.3.1 – EGRESS CAPACITY
   HOTELS AND DORMITORIES = 5 MM PER OCCUPANT

   MINIMUM REQUIRED: 440 MM (88 OCCUPANTS x 5 MM PER OCCUPANT)
   PROPOSED EGRESS CAPACITY: 3600 MM: (4) 900 MM DOORS

9. NFPA 101 PARAGRAPH 28.2.6 – EXIT ACCESS TRAVEL DISTANCE
   MAXIMUM ALLOWED WITHIN ROOM OR SUITE TO CORRIDOR: 23 METERS
   MAXIMUM ALLOWED CORRIDOR DOOR OF ANY ROOM OR SUITE TO NEAREST EXIT: 30 METERS

   PROPOSED WITHIN ROOM OR SUITE TO CORRIDOR: 4 METERS
   PROPOSED CORRIDOR DOOR OF ANY ROOM OR SUITE TO NEAREST EXIT: 17 METERS

10. NFPA 101 PARAGRAPH 28.3.6.1.2 – CORRIDOR FIRE–RESISTANCE RATING (HOUR)
    REQUIRED: WALLS NOT LESS THAN ONE HOUR FIRE RESISTANCE RATING
    PROPOSED: 1 HOUR RATING

11. NFPA 101 PARAGRAPH 28.3.6.2 & TABLE 8.3.4.2 – DOORS INTO EXIT ACCESS CORRIDORS
    REQUIRED MINIMUM: 20 MINUTE FIRE PROTECTION RATING
    PROPOSED: 20 MINUTE DOORS

12. NFPA 101 PARAGRAPH 28.2.3.3 – CORRIDOR WIDTH
    REQUIRED: SUFFICIENT FOR OCCUPANT LOAD, BUT NOT LESS THAN 1120 MM
    CALCULATED WIDTH REQUIRED PER OCCUPANT LOAD: 440 MM (88 OCCUPANTS X 5 MM)
    PROPOSED: 1700 MM

13. NFPA 101 PARAGRAPH 28.2.5.3 – COMMON PATH OF TRAVEL
    MAXIMUM ALLOWED: 10.7 METERS
    PROPOSED: 10.7 M

14. NFPA 101 PARAGRAPH 28.2.5.5 – DEAD END CORRIDORS
    PERMITTED: 10.7 METERS
    PROPOSED: NO DEAD END CORRIDORS

15. NFPA 101 PARAGRAPH 28.2.4.1 AND 7.4.1.1 – MINIMUM NUMBER OF EXITS
    REQUIRED: 2 MINIMUM
    PROPOSED: 3 EXITS

16. NFPA 101 PARAGRAPH 28.2.1.2 & 24.2 – SECONDARY MEANS OF ESCAPE
    ONE OF THE FOLLOWING REQUIRED:
    1) DOOR, SIMILAR TO PRIMARY, BUT REMOTE FROM PRIMARY
    2) OPERABLE WINDOW, 0.53 SM, NOT LESS THAN 510 MM WIDE, 610 MM HIGH, NOT MORE THAN 1120 MM AFF, WITHIN 6100 MM OF GRADE
    PROPOSED: OPERABLE WINDOWS, 0.93 SM EACH PER SLEEPING ROOM

17. NFPA 101 PARAGRAPH 24.2.2.4 – TWO PRIMARY MEANS OF ESCAPE
    AREA WITH DWELLING UNIT EXCEEDS 185 SM PER STORY
    ALLOWED AREA PER STORY WITHIN DWELLING UNIT: 185 SM
    PROPOSED AREA WITHIN DWELLING UNIT: 14 SM
    REQUIRED PRIMARY EXITS: 1
    PROPOSED PRIMARY EXITS: 1

18. NFPA 101 PARAGRAPH 28.3.7.1 – SUBDIVISION OF BUILDING SPACES – NONSPRINKLERED
    REQUIRED: EACH GUEST ROOM OR DORMITORY ROOM SHALL BE SEPARATED FROM OTHER GUEST OR DORMITORY ROOMS BY FIRE BARRIERS HAVING FIRE RESISTANCE RATED OF NOT LESS THAN 1 HOUR
    PROPOSED: 1 HOUR SEPARATION

19. HAZARDOUS AREA PROTECTION TABLE 28.3.2.2.2
    STORAGE ROOMS: 1 HOUR SEPARATION REQUIRED
    PROPOSED: NOT APPLICABLE

20. NFPA 101 A.3.3.53 DORMITORY: ROOMS WITHIN DORMITORIES INTENDED FOR THE USE OF INDIVIDUALS FOR COMBINED LIVING AND SLEEPING PURPOSES ARE GUEST ROOMS OR GUEST SUITES. EXAMPLES OF DORMITORIES ARE COLLEGE DORMITORIES, FRATERNITY AND SORORITY HOUSES AND MILITARY BARRACKS.

21. NFPA 101 28.3.5.2 EXTINGUISHMENT REQUIREMENTS: AUTOMATIC SPRINKLER PROTECTION REQUIRED UNLESS SLEEPING ROOMS HAVE DOORS DIRECTLY TO OUTSIDE.
    DUE TO AUSTERE DESIGN CRITERIA, THE GOVERNMENT WILL WAIVE THIS REQUIREMENT.

1 0 1 2 3 4 5 6 7 8 9
1:100

UNLESS NOTED OTHERWISE, LINEAR DIMENSIONS SHOWN ARE IN MILLIMETERS.

APPROVED:

A/E DESIGNER OF RECORD

SEAL:

US ARMY CORPS OF ENGINEERS
AFGHANISTAN ENGINEER DISTRICT

Mark	Description	Date	Appr.	Mark	Description	Date	Appr.

Designed by: Dwn by: Ckd by: Reviewed by: Submitted by:
Date: 5/19/10 Rev: 0
Design file no.
Drawing code:
File name: AF1024B-AR001PN
Plot date: 2010/06/08
Plot scale:

U.S. ARMY ENGINEER DISTRICT, AFGHANISTAN
CORPS OF ENGINEERS
APO AE 96338

STANDARD DESIGN
VARIOUS PROJECTS
VARIOUS LOCATIONS, AFGHANISTAN

NCO BARRACK

AF1024B–AR001PN – LAYOUT1

SHEET REFERENCE NUMBER:
B

R:\ENGINEERING\26 STANDARD DESIGNS\A–E STANDARD DESIGNS\NCO BARRACKS\AF1024B–AR001PN.DWG

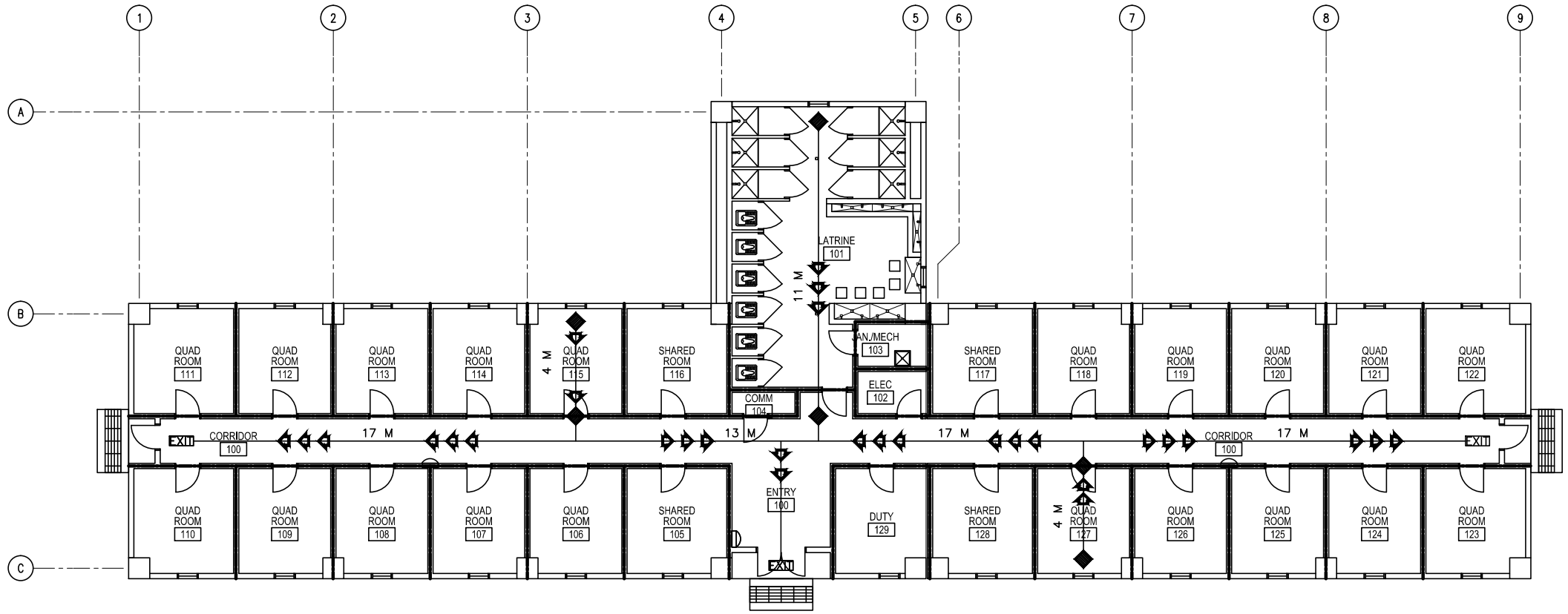

LIFE SAFETY PLAN
SCALE: 1:100

LEGEND:

- DENOTES PATHS OF EXIT TRAVEL
- EXIT — DENOTES DOOR AS AN EMERGENCY EXIT
- DENOTES STARTING POINT FOR TRAVEL DISTANCE
- DENOTES FIRE EXTINGUISHER LOCATIONS
- 1– HOUR RATED WALL

CODE ANALYSIS:

1. REFERENCES:
   2006 INTERNATIONAL BUILDING CODE (2006 IBC)
   2006 LIFE SAFETY CODE (2006 NFPA 101)
   2006 NFPA 10 – STANDARD FOR PORTABLE FIRE EXTINGUISHERS.

2. IBC OCCUPANCY CLASSIFICATION:
   GROUP R–2 (NEW HOTELS AND DORMITORIES NFPA 101 6.1.8 AND CHAPTER 28)

3. TYPE OF CONSTRUCTION (IBC): TYPE II–B (UNPROTECTED/NONSPRINKLERED)

4. IBC TABLE 503: ALLOWABLE HEIGHT AND BUILDING AREAS:
   GROUP R–2
   ALLOWABLE AREA: 1486 SM
   ALLOWABLE HEIGHT: 4 STORIES (16 M)

   GROUP R–2
   PROPOSED AREA: 625 SM
   PROPOSED HEIGHT: 1 STORY (<16 M)

5. IBC TABLE 601 & 602: FIRE RESISTANCE RATING REQUIREMENTS FOR BUILDING ELEMENTS FOR TYPE II–B

BUILDING ELEMENT	RATING (HOUR)	REFERENCE
STRUCTURAL FRAME (COLUMNS, GIRDERS & TRUSSES)	0	TABLE 601
BEARING WALLS		
EXTERIOR	0	TABLE 601
INTERIOR	0	TABLE 601
NONBEARING WALLS & PARTITIONS		
INTERIOR	0	TABLE 601
FLOOR CONSTRUCTION	0	TABLE 601
ROOF CONSTRUCTION	0	TABLE 601
EXTERIOR WALL	0	TABLE 602

6. IBC TABLE 803.5 – INTERIOR WALL AND CEILING FINISH REQUIREMENTS FOR R–2 OCCUPANCY/NONSPRINKLERED

GROUP	EXIT ENCLOSURES AND EXIT PASSAGEWAY	CORRIDORS	ROOMS AND ENCLOSED SPACES
R–2	B	B	C

7. NFPA 101 TABLE 7.3.1.2 – OCCUPANT LOAD
   HOTELS AND DORMITORIES = 18.6 SM/PERSON CALCULATED = 34 OCCUPANTS
   ACTUAL = 88 OCCUPANTS

8. NFPA 101 TABLE 7.3.3.1 – EGRESS CAPACITY
   HOTELS AND DORMITORIES = 5 MM PER OCCUPANT

   MINIMUM REQUIRED: 440 MM (88 OCCUPANTS x 5 MM PER OCCUPANT)
   PROPOSED EGRESS CAPACITY: 3600 MM: (4) 900 MM DOORS

9. NFPA 101 PARAGRAPH 28.2.6 – EXIT ACCESS TRAVEL DISTANCE
   MAXIMUM ALLOWED WITHIN ROOM OR SUITE TO CORRIDOR: 23 METERS
   MAXIMUM ALLOWED CORRIDOR DOOR OF ANY ROOM OR SUITE TO NEAREST EXIT: 30 METERS

   PROPOSED WITHIN ROOM OR SUITE TO CORRIDOR: 4 METERS
   PROPOSED CORRIDOR DOOR OF ANY ROOM OR SUITE TO NEAREST EXIT: 17 METERS

10. NFPA 101 PARAGRAPH 28.3.6.1.2 – CORRIDOR FIRE–RESISTANCE RATING (HOUR)
    REQUIRED: WALLS NOT LESS THAN ONE HOUR FIRE RESISTANCE RATING
    PROPOSED: 1 HOUR RATING

11. NFPA 101 PARAGRAPH 28.3.6.2 & TABLE 8.3.4.2 – DOORS INTO EXIT ACCESS CORRIDORS
    REQUIRED MINIMUM: 20 MINUTE FIRE PROTECTION RATING
    PROPOSED: 20 MINUTE DOORS

12. NFPA 101 PARAGRAPH 28.2.3.3 – CORRIDOR WIDTH
    REQUIRED: SUFFICIENT FOR OCCUPANT LOAD, BUT NOT LESS THAN 1120 MM
    CALCULATED WIDTH REQUIRED PER OCCUPANT LOAD: 440 MM (88 OCCUPANTS X 5 MM)
    PROPOSED: 1700 MM

13. NFPA 101 PARAGRAPH 28.2.5.3 – COMMON PATH OF TRAVEL
    MAXIMUM ALLOWED: 10.7 METERS
    PROPOSED: 10.7 M

14. NFPA 101 PARAGRAPH 28.2.5.5 – DEAD END CORRIDORS
    PERMITTED: 10.7 METERS
    PROPOSED: NO DEAD END CORRIDORS

15. NFPA 101 PARAGRAPH 28.2.4.1 AND 7.4.1.1 – MINIMUM NUMBER OF EXITS
    REQUIRED: 2 MINIMUM
    PROPOSED: 3 EXITS

16. NFPA 101 PARAGRAPH 28.2.1.2 & 24.2 – SECONDARY MEANS OF ESCAPE
    ONE OF THE FOLLOWING REQUIRED:
    1) DOOR, SIMILAR TO PRIMARY, BUT REMOTE FROM PRIMARY
    2) OPERABLE WINDOW, 0.53 SM, NOT LESS THAN 510 MM WIDE, 610 MM HIGH, NOT MORE THAN 1120 MM AFF, WITHIN 6100 MM OF GRADE
    PROPOSED: OPERABLE WINDOWS, 0.93 SM EACH PER SLEEPING ROOM

17. NFPA 101 PARAGRAPH 24.2.2.4 – TWO PRIMARY MEANS OF ESCAPE
    AREA WITH DWELLING UNIT EXCEEDS 185 SM PER STORY
    ALLOWED AREA PER STORY WITHIN DWELLING UNIT: 185 SM
    PROPOSED AREA WITHIN DWELLING UNIT: 14 SM
    REQUIRED PRIMARY EXITS: 1
    PROPOSED PRIMARY EXITS: 1

18. NFPA 101 PARAGRAPH 28.3.7.1 – SUBDIVISION OF BUILDING SPACES – NONSPRINKLERED
    REQUIRED: EACH GUEST ROOM OR DORMITORY ROOM SHALL BE SEPARATED FROM OTHER GUEST OR DORMITORY ROOMS BY FIRE BARRIERS HAVING FIRE RESISTANCE RATED OF NOT LESS THAN 1 HOUR
    PROPOSED: 1 HOUR SEPARATION

19. HAZARDOUS AREA PROTECTION TABLE 28.3.2.2.2
    STORAGE ROOMS: 1 HOUR SEPARATION REQUIRED
    PROPOSED: NOT APPLICABLE

20. NFPA 101 A.3.3.53 DORMITORY: ROOMS WITHIN DORMITORIES INTENDED FOR THE USE OF INDIVIDUALS FOR COMBINED LIVING AND SLEEPING PURPOSES ARE GUEST ROOMS OR GUEST SUITES. EXAMPLES OF DORMITORIES ARE COLLEGE DORMITORIES, FRATERNITY AND SORORITY HOUSES AND MILITARY BARRACKS.

21. NFPA 101 28.3.5.2 EXTINGUISHMENT REQUIREMENTS: AUTOMATIC SPRINKLER PROTECTION REQUIRED UNLESS SLEEPING ROOMS HAVE DOORS DIRECTLY TO OUTSIDE.
    DUE TO AUSTERE DESIGN CRITERIA, THE GOVERNMENT WILL WAIVE THIS REQUIREMENT.

1 0 1 2 3 4 5 6 7 8 9
1:100

UNLESS NOTED OTHERWISE, LINEAR DIMENSIONS SHOWN ARE IN MILLIMETERS.

APPROVED:

A/E DESIGNER OF RECORD

SEAL:

US ARMY CORPS OF ENGINEERS
AFGHANISTAN ENGINEER DISTRICT

Mark	Description	Date	Appr.	Mark	Description	Date	Appr.

Designed by:
Dwn by:
Ckd by:
Reviewed by:
Submitted by:
Date: 5/19/10
Rev: 0
Design file no.
Drawing code:
File name: AF1024B-AR001PN
Plot date: 2010/05/05
Plot scale:

U.S. ARMY ENGINEER DISTRICT, AFGHANISTAN
CORPS OF ENGINEERS
APO AE 96338

STANDARD DESIGN
VARIOUS PROJECTS
VARIOUS LOCATIONS, AFGHANISTAN

NCO BARRACK

AF1024B–AR001PN – LAYOUT1

SHEET REFERENCE NUMBER:
B

R:\ENGINEERING\26 STANDARD DESIGNS\A-E STANDARD DESIGNS\NCO BARRACKS\AF1024B-AR001PN.DWG

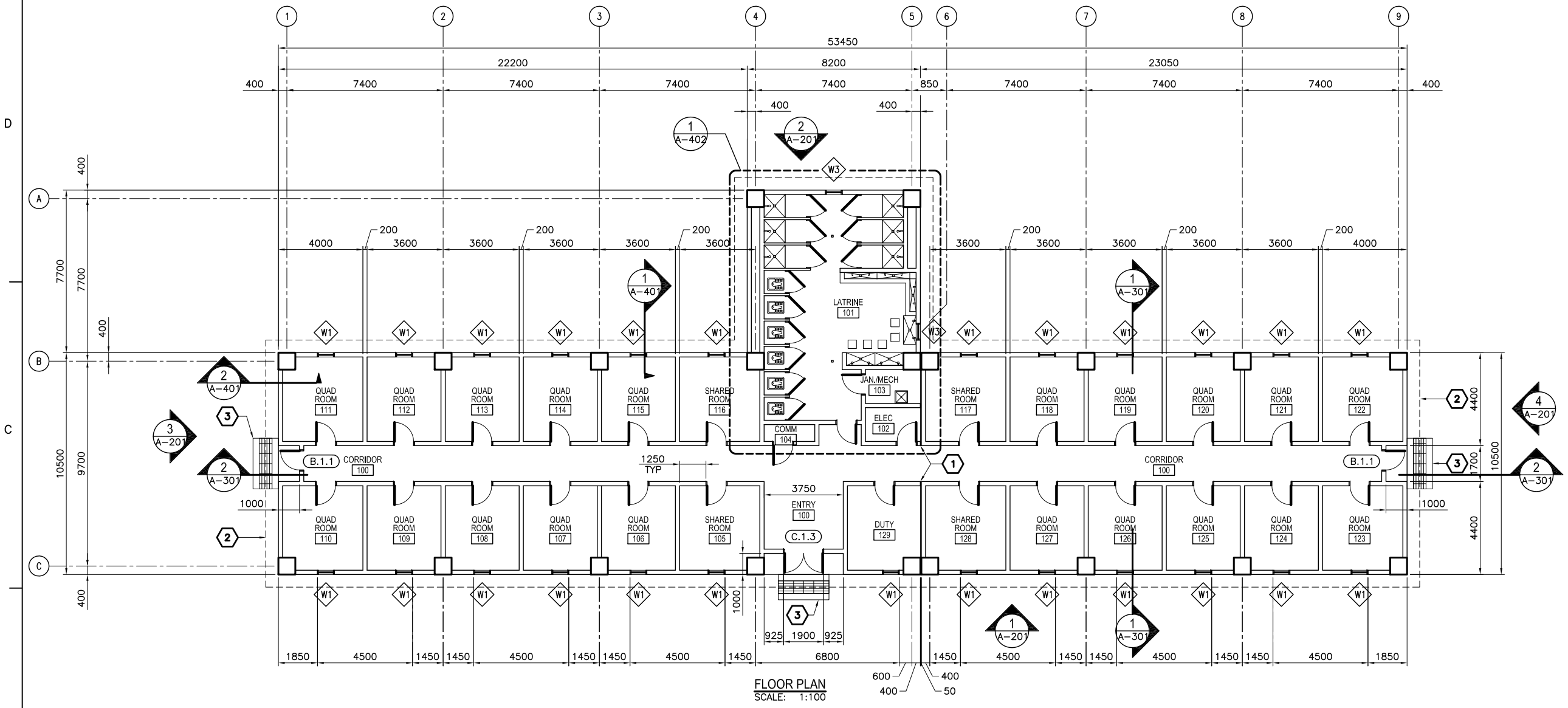

FLOOR PLAN
SCALE: 1:100

GENERAL NOTES:

A. DIMENSIONS ARE SHOWN TO OUTER EDGE OF EXTERIOR STRUCTURAL COLUMNS, STRUCTURAL COLUMN GRID, EDGE OF INTERIOR PARTITIONS, EDGE OF WINDOW OPENINGS, AND TO HINGED SIDE OF DOOR FRAME OPENINGS.

B. OPENINGS FOR DOORS AND FRAMES SHALL BE LOCATED 200 MM FROM THE ADJACENT WALL OR COLUMN, UNLESS NOTED OTHERWISE.

C. INTERIOR PARTITIONS SHALL BE 200 MM CMU, UNLESS NOTED OTHERWISE.

D. COSMETIC REPAIR OF MINOR DEFECTS: REPAIR OR FILL MORTAR JOINTS AND MINOR DEFECTS, INCLUDING BUT NOT LIMITED TO SPALLS, IN ACCORDANCE WITH MANUFACTURER'S RECOMMENDATIONS AND PRIOR TO COATING APPLICATION. SURFACES TO BE PAINTED SHALL BE CLEAN AND FREE OF FOREIGN MATTER BEFORE APPLICATION OF PAINT. CLEANING SHALL BE SCHEDULED SO THAT DUST AND OTHER CONTAMINANTS WILL NOT FALL ON NEWLY PAINTED SURFACES.

E. CONCRETE, PLASTER AND MASONRY SURFACES SHALL BE ALLOWED TO CURE FOR AT LEAST 30 DAYS BEFORE PAINTING. CONCRETE SLABS-ON-GRADE SHALL BE ALLOWED TO CURE 90 DAYS BEFORE STAINING OR SEALING.

F. DO NOT USE PAINT MATERIALS CONTAINING LEAD CONTENT IN EXCESS OF 0.006 PERCENT BY WEIGHT OF THE TOTAL NONVOLATILE CONTENT OF THE PAINT OR THE WEIGHT OF THE DRIED PAINT FILM.

G. DO NOT USE ANY ASBESTOS CONTAINING MATERIALS (ACM) IN PROJECT. ACM IS DEFINED AS 1% OR MORE BY VOLUME.

H. DO NOT USE PAINT MATERIALS CONTAINING MERCURIAL FUNGICIDES.

I. FACTORY PRIMED METAL DOORS AND FRAMES SHALL RECEIVE TWO COATS OF PAINT.

J. FILL REMAINING SPACE AT PENETRATIONS IN FIRE-RATED FLOORS, PARTITIONS AND CEILINGS WITH APPROPRIATE FIRESTOPPING MATERIALS.

K. ALL CEILING FINISHES SHALL BE PAINTED PLASTER APPLIED TO STRUCTURE.

L. ALL WALL FINISHES SHALL BE PAINTED PLASTER APPLIED TO STRUCTURE, UNLESS OTHERWISE NOTED.

M. ALL FLOOR FINISHES SHALL BE EPOXY SEALED CONCRETE, UNLESS NOTED OTHERWISE.

N. PROVIDE TILE FINISHES AS INDICATED IN DETAILS AND KEY NOTES.

O. ALL DOOR, FRAME AND HARDWARE TYPES SHALL BE 20A.1.11 UNLESS NOTED OTHERWISE

P. ALL TOILET STALL DOORS SHALL BE F.2.12

Q. SHOWER STALL DOOR, FRAME AND HARDWARE TYPE SHALL BE E.1.12.

R. PROVIDE POLISHED STAINLESS STEEL MIRROR 600 X 900 ABOVE EVERY LAVATORY FAUCET.

S. ALL INTERIOR PARTITIONS SHALL BE FULL HEIGHT TO UNDERSIDE OF STRUCTURE EXCEPT AS NOTED.

KEY NOTES:

1. EXPANSION JOINT COVER– SEE SHEET A–506.
2. LINE OF ROOF OVERHANG ABOVE.
3. CONCRETE STOOP WITH GRATE – SEE DETAIL 1/A–503.

LEGEND:

XXX — DOOR FRAME AND HARDWARE TYPE, SEE SHEET A–601

A — WINDOW TYPE, SEE SHEET A–601

X — KEY NOTE

ABBREVIATIONS:

COMM	COMMUNICATIONS
ELEC	ELECTRICAL
MECH	MECHANICAL
JAN	JANITOR
CLOS	CLOSET

1 0 1 2 3 4 5 6 7 8 9
1:100

UNLESS NOTED OTHERWISE, LINEAR DIMENSIONS SHOWN ARE IN MILLIMETERS.

APPROVED:

A/E DESIGNER OF RECORD

SEAL:

US ARMY CORPS OF ENGINEERS
AFGHANISTAN ENGINEER DISTRICT

Mark	Description	Date	Appr.	Mark	Description	Date	Appr.

Designed by: Dwn by: Ckd by: Reviewed by: Submitted by:
Date: 5/19/10 Rev: 0
Design file no.
Drawing code:
File name: AF1024B-AR101PN
Plot date: 2010/06/08
Plot scale:

U.S. ARMY ENGINEER DISTRICT, AFGHANISTAN
CORPS OF ENGINEERS
APO AE 96338

STANDARD DESIGN
VARIOUS PROJECTS
VARIOUS LOCATIONS, AFGHANISTAN
NCO BARRACK
AF1024B–AR101PN – LAYOUT1

SHEET REFERENCE NUMBER:
B

R:\ENGINEERING\26 STANDARD DESIGNS\A-E STANDARD DESIGNS\NCO BARRACKS\AF1024B-AR101PN.DWG

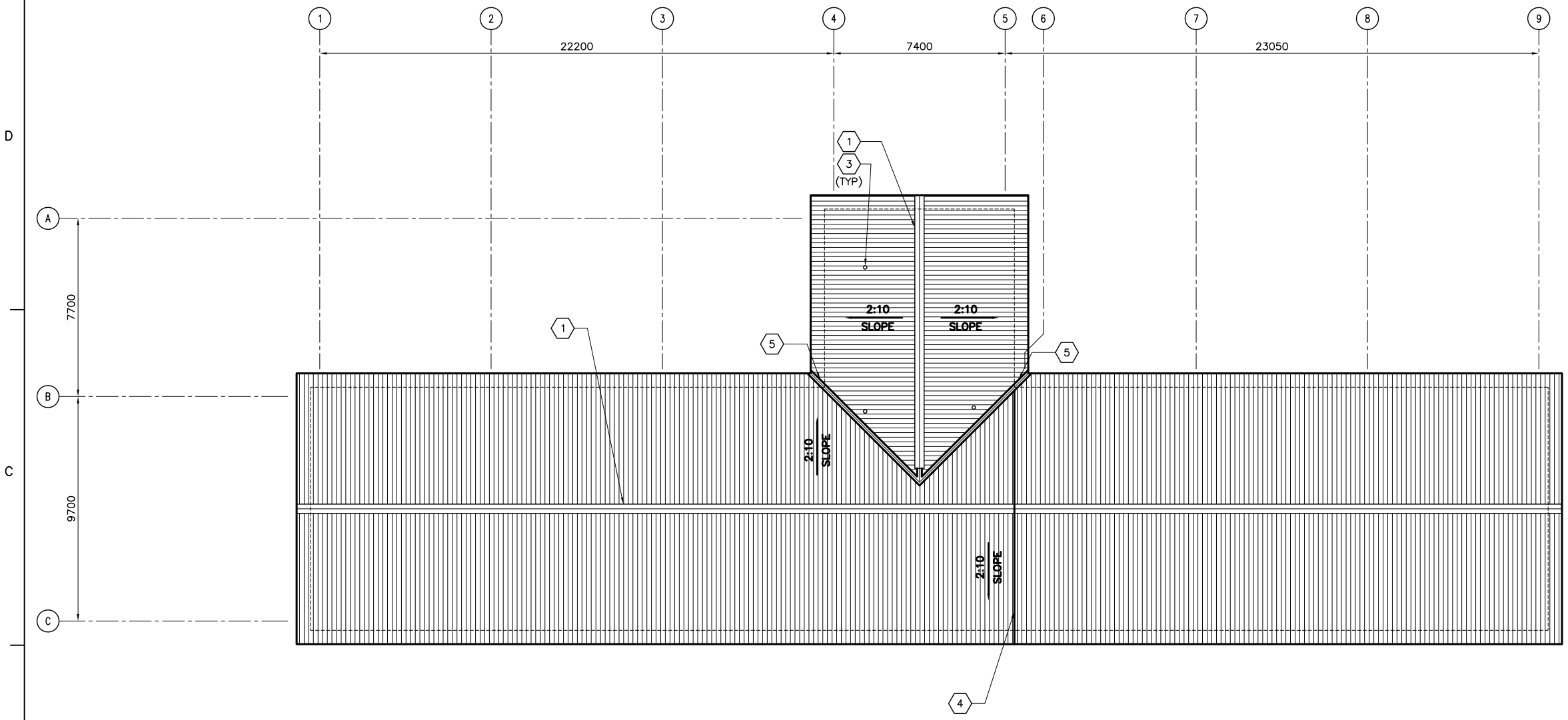

ROOF PLAN
SCALE: 1:100

GENERAL NOTES:

A. THE APPROXIMATE LOCATION OF ROOF DEVICES AND PENETRATIONS ARE SHOWN ON THE ROOF PLAN FOR INFORMATION ONLY. THE CONTRACTOR SHALL BE RESPONSIBLE FOR UNDERSTANDING THE ACTUAL LOCATION OF THESE AND ALL OTHER ITEMS PRIOR TO BEGINNING CONSTRUCTION. COORDINATE ALL ROOF PENETRATIONS WITH STRUCTURAL, MECHANICAL AND PLUMBING WORK.

B. PLUMBING VENT PENETRATIONS SHALL TERMINATE 300 MM MINIMUM ABOVE THE ROOF.

C. UNLESS OTHERWISE NOTED, NOTES, DETAILS OR FEATURES INDICATED FOR ONE CONDITION SHALL BE APPLICABLE FOR ALL ALIKE AND SIMILAR CONDITIONS.

D. STOCKPILING OF MATERIALS, EQUIPMENT AND ANY OTHER ITEMS ON THE ROOF IS PROHIBITED.

E. ROOFS SHALL BE CORRUGATED METAL ROOF PANELS ON COLD–FORMED METAL FRAMING ON CONCRETE SLAB.

KEY NOTES:

1. CONTINUOUS METAL RIDGE VENT SEE DETAIL 4/A–501.
2. NOT USED.
3. PLUMBING VENT – SEE DETAIL 5/A–501.
4. ROOF EXPANSION JOINT – SEE DETAIL 4A/A–501.
5. VALLEY – SEE DETAIL 6/A–501

1 0 1 2 3 4 5 6 7 8 9
1:100

UNLESS NOTED OTHERWISE, LINEAR DIMENSIONS SHOWN ARE IN MILLIMETERS.

APPROVED:

A/E DESIGNER OF RECORD

SEAL:

US ARMY CORPS OF ENGINEERS
AFGHANISTAN ENGINEER DISTRICT

Mark	Description	Date	Appr.	Mark	Description	Date	Appr.

Designed by:
Dwn by:
Ckd by:
Date: 5/19/10
Rev: 0
Design file no.
Reviewed by:
Drawing code:
Submitted by:
File name: AF1024B-AR1102PN
Plot date: 2010/06/08
Plot scale:

U.S. ARMY ENGINEER DISTRICT, AFGHANISTAN
CORPS OF ENGINEERS
APO AE 96338

STANDARD DESIGN
VARIOUS PROJECTS
VARIOUS LOCATIONS, AFGHANISTAN

NCO BARRACK

AF1024B–AR1102PN – LAYOUT1

SHEET REFERENCE NUMBER:
B

R:\ENGINEERING\26 STANDARD DESIGNS\A–E STANDARD DESIGNS\NCO BARRACKS\AF1024B–AR1102PN.DWG

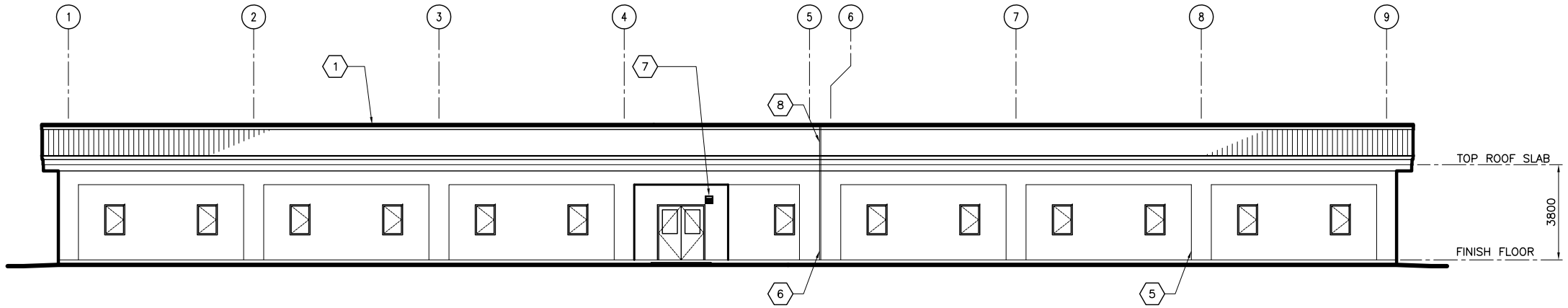

ELEVATION 1 A-101
SCALE: 1:100

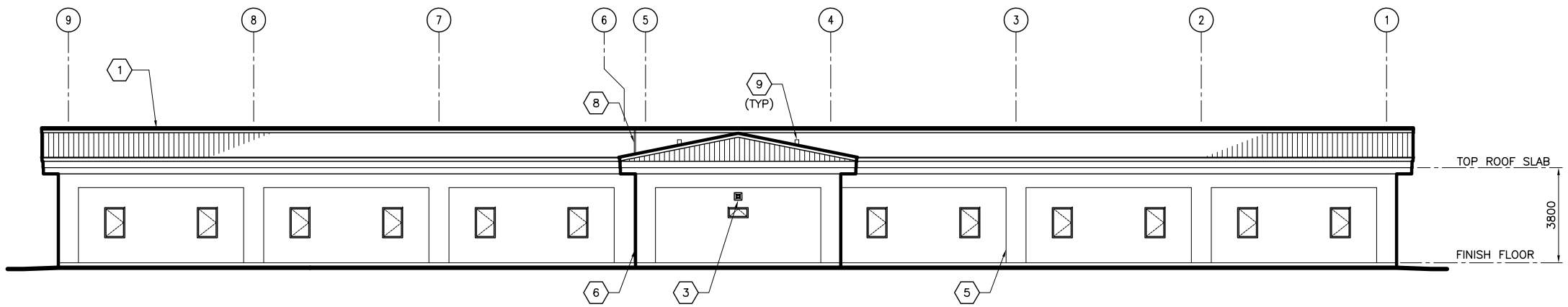

ELEVATION 2 A-101
SCALE: 1:100

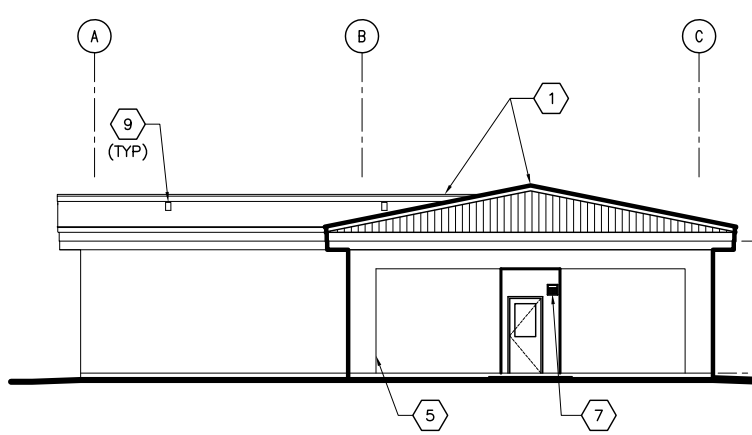

ELEVATION 3 A-101
SCALE: 1:100

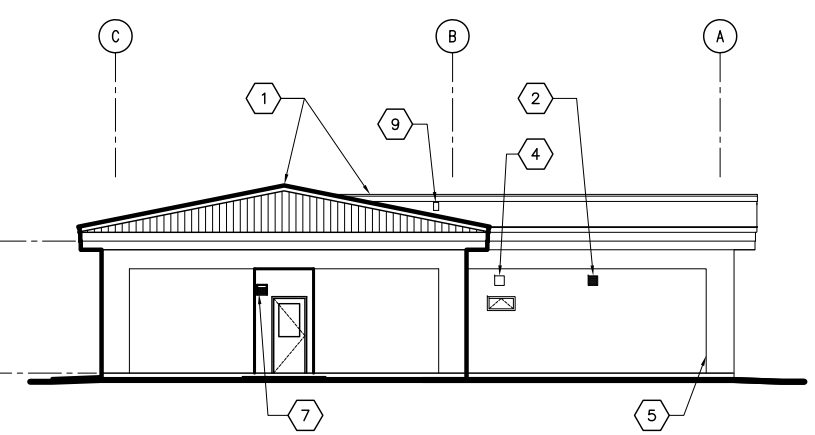

ELEVATION 4 A-101
SCALE: 1:100

KEY NOTES:

1. CONTINUOUS METAL RIDGE VENT – SEE DETAIL 4/A-501.
2. LOUVER, LOCATE TOP OF WALL PENETRATION 2800 MM ABOVE FINISHED FLOOR – SEE MECHANICAL DRAWINGS.
3. EXHAUST FAN, LOCATE TOP OF WALL PENETRATION 2800 MM ABOVE FINISHED FLOOR – SEE MECHANICAL DRAWINGS.
4. INLINE EXHAUST FAN DUCTED TO WALL CAP – SEE MECHANICAL DRAWINGS.
5. STUCCO CONTROL JOINT – SEE DETAIL 2A/A-501.
6. EXPANSION JOINT COVER – SEE SHEET A-506.
7. EXTERIOR LIGHT FIXTURE – SEE ELECTRICAL.
8. ROOF EXPANSION JOINT.
9. VENT THRU ROOF – SEE PLUMBING.

GENERAL NOTES:

A. COORDINATE SIZE AND LOCATION OF OPENINGS FOR MECHANICAL ITEMS WITH MECHANICAL DRAWINGS.

B. PROVIDE STRUCTURAL LINTELS AS REQUIRED – SEE STRUCTURAL DRAWINGS

C. ALL EXTERIOR WALL FINISHES SHALL BE STUCCO OVER CMU AND CONCRETE SUBSTRATES. PROVIDE CONTROL JOINTS IN STUCCO WALL FINISH AS NOTED.

D. ROOF SHALL BE CORRUGATED METAL ROOF PANELS ON COLD-FORMED METAL FRAMING ON CONCRETE SLAB.

1 0 1 2 3 4 5 6 7 8 9
1:100

UNLESS NOTED OTHERWISE, LINEAR DIMENSIONS SHOWN ARE IN MILLIMETERS.

APPROVED:

A/E DESIGNER OF RECORD

SEAL:

US ARMY CORPS OF ENGINEERS
AFGHANISTAN ENGINEER DISTRICT

Mark	Description	Date	Appr.	Mark	Description	Date	Appr.

Designed by: Date: 5/19/10 Rev: 0
Dwn by: Ckd by: Design file no.
Reviewed by: Drawing code:
Submitted by: File name: AF1024B-AR201EL
Plot date: 2010/06/08
Plot scale:

U.S. ARMY ENGINEER DISTRICT, AFGHANISTAN
CORPS OF ENGINEERS
APO AE 96338

STANDARD DESIGN
VARIOUS PROJECTS
VARIOUS LOCATIONS, AFGHANISTAN

NCO BARRACK

AF1024B-AR201EL – LAYOUT1

SHEET REFERENCE NUMBER:
B

R:\ENGINEERING\26 STANDARD DESIGNS\A-E STANDARD DESIGNS\NCO BARRACKS\AF1024B-AR201EL.DWG

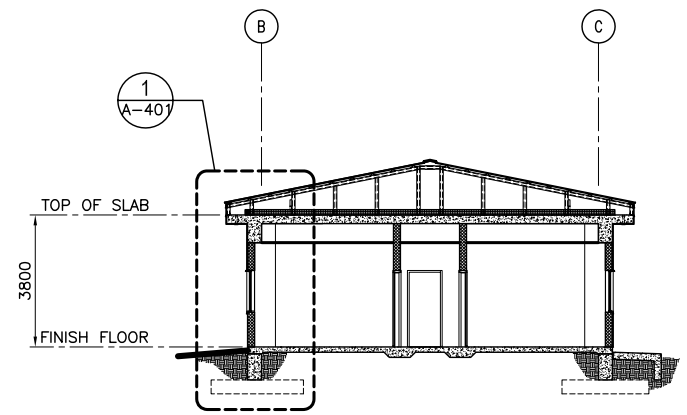

SECTION 1/A-101
SCALE: 1:100

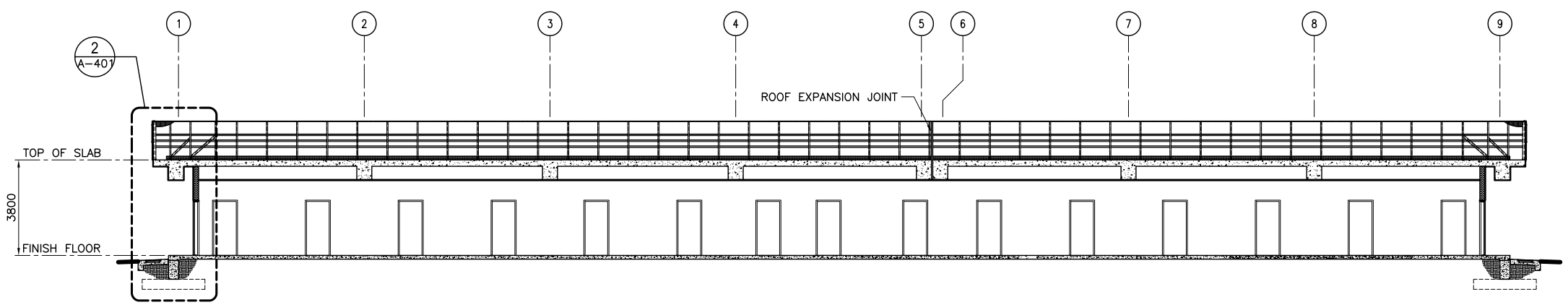

SECTION 2/A-101
SCALE: 1:100

1 0 1 2 3 4 5 6 7 8 9
1:100

UNLESS NOTED OTHERWISE, LINEAR DIMENSIONS SHOWN ARE IN MILLIMETERS.

APPROVED:

A/E DESIGNER OF RECORD

SEAL:

US ARMY CORPS OF ENGINEERS
AFGHANISTAN ENGINEER DISTRICT

Mark	Description	Date	Appr.	Mark	Description	Date	Appr.

Designed by:
Dwn by:
Ckd by:
Reviewed by:
Submitted by:
Date: 5/19/10
Rev: 0
Design file no.
Drawing code:
File name: AF1024B-AR301SC
Plot date: 2010/06/06
Plot scale:

U.S. ARMY ENGINEER DISTRICT, AFGHANISTAN
CORPS OF ENGINEERS
APO AE 96338

STANDARD DESIGN
VARIOUS PROJECTS
VARIOUS LOCATIONS, AFGHANISTAN

NCO BARRACK

AF1024B-AR301SC - LAYOUT1

SHEET REFERENCE NUMBER:
B

R:\ENGINEERING\26 STANDARD DESIGNS\A-E STANDARD DESIGNS\NCO BARRACKS\AF1024B-AR301SC.DWG

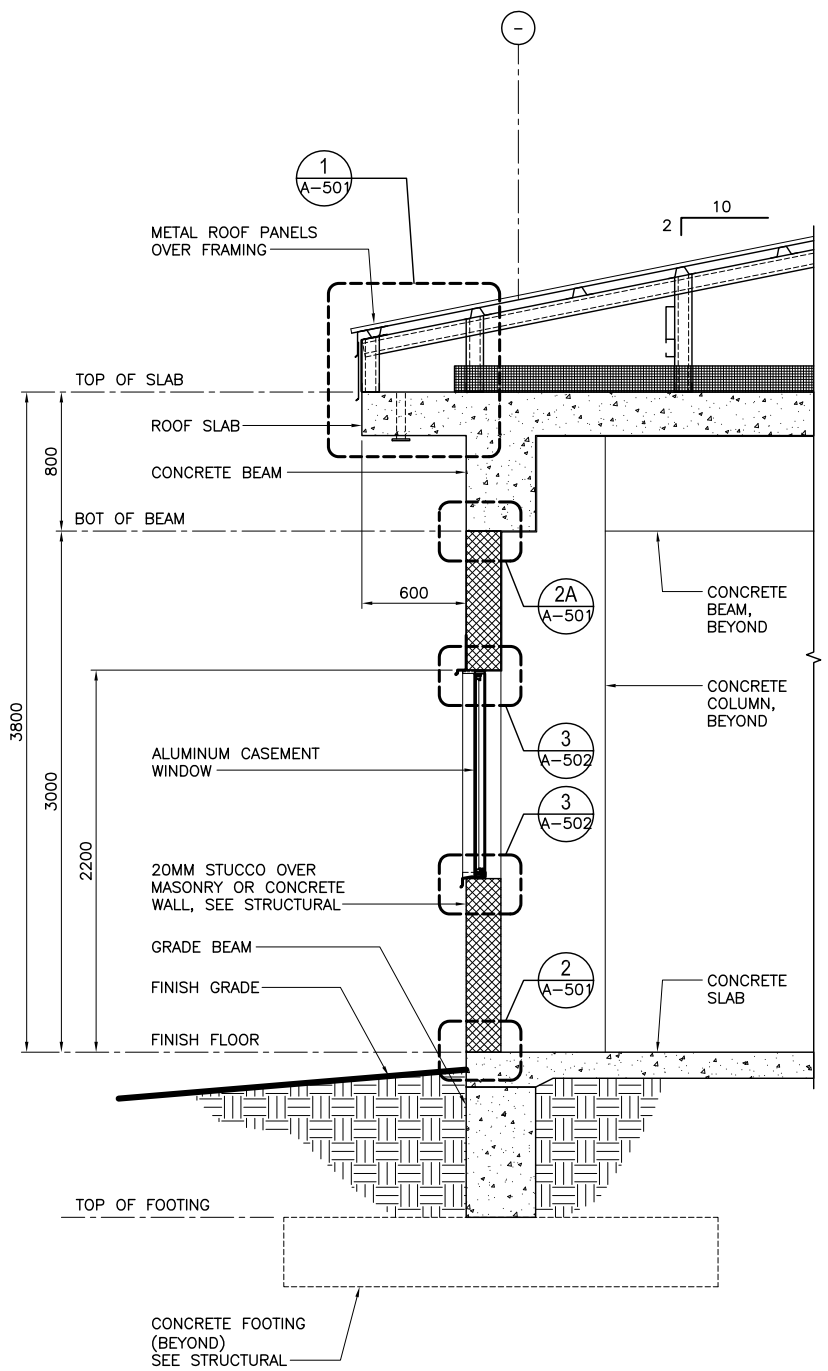

TYPICAL WALL SECTION 1 A-101,A-301
SCALE: 1:20

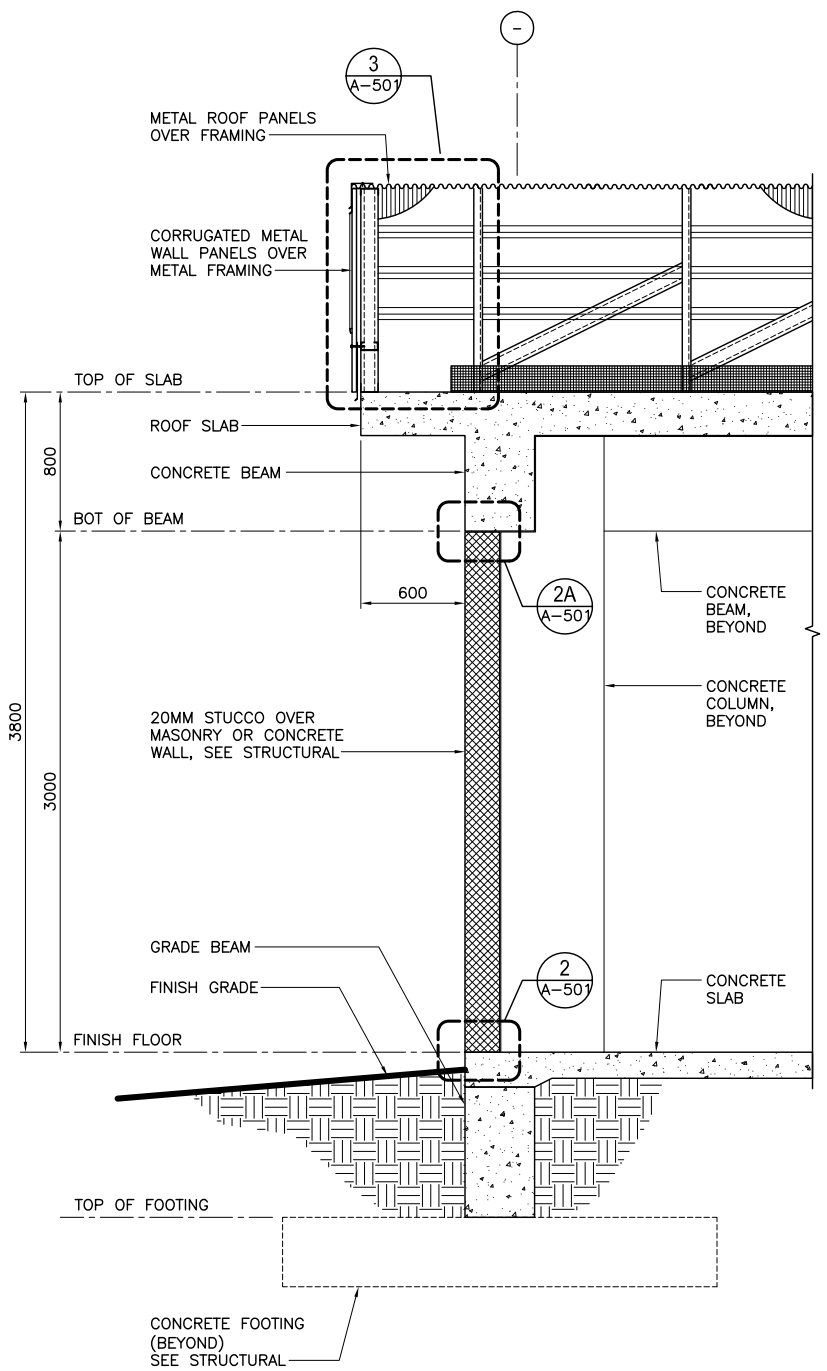

TYPICAL WALL SECTION 2 A-101,A-301
SCALE: 1:20

1 .50 0 1
1:20

UNLESS NOTED OTHERWISE, LINEAR DIMENSIONS SHOWN ARE IN MILLIMETERS.

APPROVED:

A/E DESIGNER OF RECORD

SEAL:

US ARMY CORPS
OF ENGINEERS
AFGHANISTAN
ENGINEER DISTRICT

Mark	Description	Date	Appr.	Mark	Description	Date	Appr.

Designed by: Date: 5/19/10 Rev: 0
Dwn by: Ckd by: Design file no.
Reviewed by: Drawing code:
Submitted by: File name: AF1024B-AR401SC
Plot date: 2010/06/08
Plot scale:

U.S. ARMY ENGINEER DISTRICT, AFGHANISTAN
CORPS OF ENGINEERS
APO AE 96338

STANDARD DESIGN
VARIOUS PROJECTS
VARIOUS LOCATIONS, AFGHANISTAN

NCO BARRACK

AF1024B-AR401SC - LAYOUT1

SHEET
REFERENCE
NUMBER:
B

R:\ENGINEERING\26 STANDARD DESIGNS\A-E STANDARD DESIGNS\NCO BARRACKS\AF1024B-AR401SC.DWG

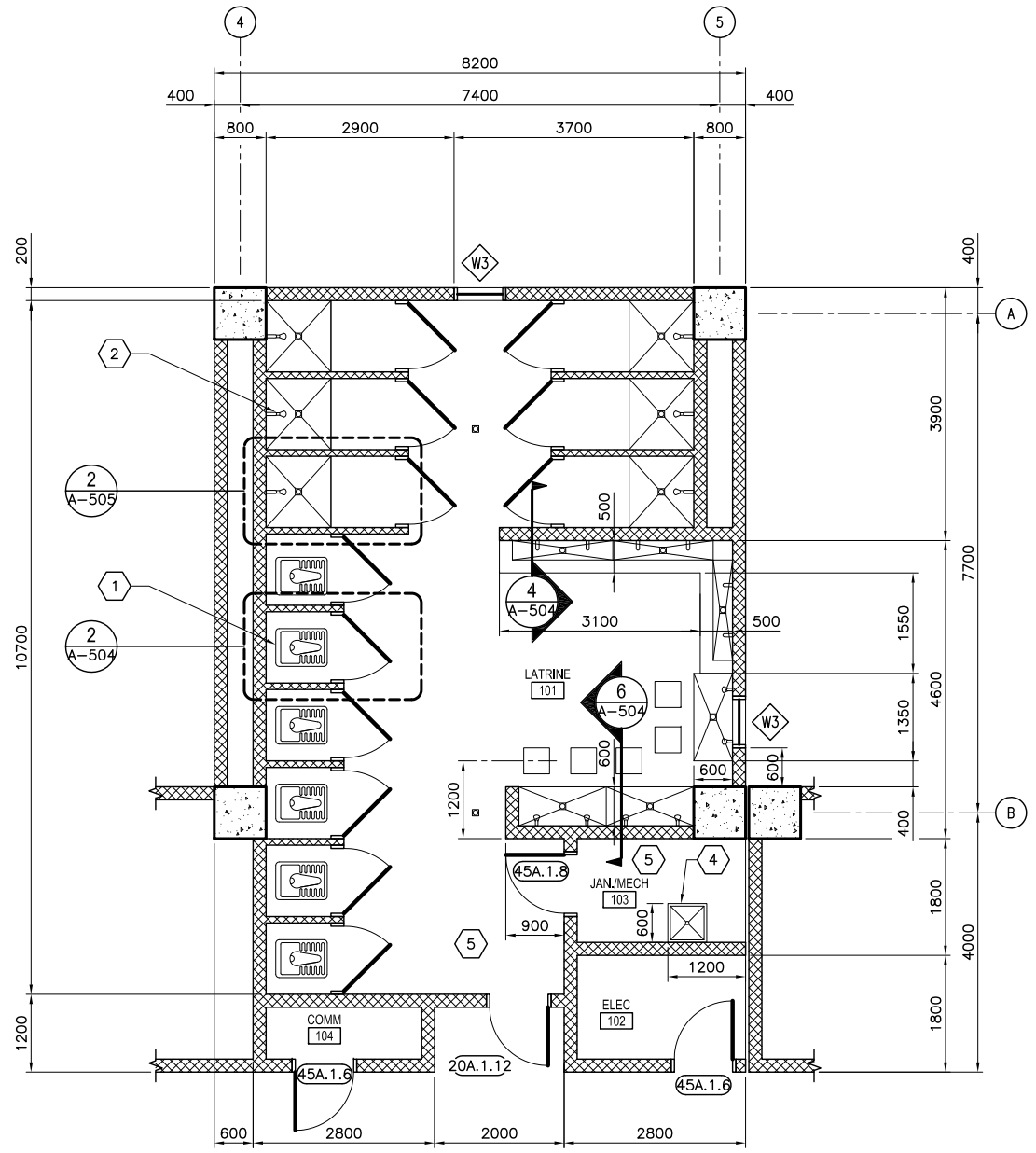

ENLARGED PLAN (1 / A-101)
SCALE: 1:50

GENERAL NOTES:

A. DIMENSIONS ARE SHOWN TO OUTER EDGE OF EXTERIOR STRUCTURAL COLUMNS, STRUCTURAL COLUMN GRID, EDGE OF INTERIOR PARTITIONS, EDGE OF WINDOW OPENINGS, AND TO HINGE SIDE OF DOOR FRAME OPENINGS.

B. OPENINGS FOR DOORS AND FRAMES SHALL BE LOCATED 200 MM FROM THE ADJACENT WALL OR COLUMN, UNLESS NOTED OTHERWISE.

C. INTERIOR PARTITIONS SHALL BE 200 MM CMU, UNLESS NOTED OTHERWISE.

D. COSMETIC REPAIR OF MINOR DEFECTS: REPAIR OR FILL MORTAR JOINTS AND MINOR DEFECTS, INCLUDING BUT NOT LIMITED TO SPALLS, IN ACCORDANCE WITH MANUFACTURER'S RECOMMENDATIONS AND PRIOR TO COATING APPLICATION. SURFACES TO BE PAINTED SHALL BE CLEAN AND FREE OF FOREIGN MATTER BEFORE APPLICATION OF PAINT. CLEANING SHALL BE SCHEDULED SO THAT DUST AND OTHER CONTAMINANTS WILL NOT FALL ON NEWLY PAINTED SURFACES.

E. CONCRETE, PLASTER, AND MASONRY SURFACES SHALL BE ALLOWED TO CURE FOR AT LEAST 30 DAYS BEFORE PAINTING. CONCRETE SLABS-ON-GRADE SHALL BE ALLOWED TO CURE 90 DAYS BEFORE STAINING OR SEALING.

F. DO NOT USE PAINT MATERIALS CONTAINING LEAD CONTENT IN EXCESS OF 0.009 PERCENT OF THE WEIGHT OF THE TOTAL NONVOLATILE CONTENT OF THE PAINT OR THE WEIGHT OF THE DRIED PAINT FILM.

G. DO NOT USE ANY ASBESTOS CONTAINING MATERIALS (ACM) IN PROJECT. ACM IS DEFINED AS 1% OR MORE BY VOLUME.

H. DO NOT USE PAINT MATERIALS CONTAINING MERCURIAL FUNGICIDES.

I. FACTORY PRIMED METAL DOORS AND FRAMES SHALL RECEIVE TWO COATS OF PAINT.

J. FILL REMAINING SPACE AT PENETRATIONS IN FIRE-RATED FLOORS, PARTITIONS AND CEILINGS WITH APPROPRIATE FIRESTOPPING MATERIALS.

K. ALL CEILING FINISHES SHALL BE PAINTED PLASTER APPLIED TO STRUCTURE.

L. ALL WALL FINISHES SHALL BE PAINTED PLASTER APPLIED TO STRUCTURE, UNLESS OTHERWISE NOTED.

M. ALL FLOOR FINISHES SHALL BE EPOXY SEALED CONCRETE, UNLESS NOTED OTHERWISE.

N. PROVIDE TILE FINISHES AS INDICATED IN DETAILS AND KEY NOTES.

O. ALL DOOR, FRAME AND HARDWARE TYPES SHALL BE 20A.1.11 UNLESS NOTED OTHERWISE

P. ALL TOILET STALL DOORS SHALL BE F.2.12

Q. SHOWER STALL DOOR, FRAME AND HARDWARE TYPE SHALL BE E.1.12.

R. PROVIDE POLISHED STAINLESS MIRROR 600 X 900 ABOVE EVERY LAVATORY FAUCET

KEY NOTES: (X)

1. TYPICAL TOILET STALL LAYOUT – SEE DETAIL 2/A-504.
2. TYPICAL SHOWER STALL LAYOUT – SEE DETAIL 2/A-505.
3. NOT USED.
4. RECESSED TROUGH – SEE DETAIL 7/A-504.
5. TERRAZZO FLOOR TILE AND CERAMIC WALL TILE TO 2000 MM ABOVE FINISHED FLOOR UNLESS OTHERWISE NOTED.

LEGEND:

(XXX) DOOR FRAME AND HARDWARE TYPE, SEE SHEET A-601

(A) WINDOW TYPE, SEE SHEET A-601

(X) KEY NOTE

ABBREVIATIONS:

COMM	COMMUNICATIONS
ELEC	ELECTRICAL
MECH	MECHANICAL
JAN	JANITOR
CLOS	CLOSET

1 0 1 2 3 4
1:50

UNLESS NOTED OTHERWISE, LINEAR DIMENSIONS SHOWN ARE IN MILLIMETERS.

APPROVED:

A/E DESIGNER OF RECORD

SEAL:

US ARMY CORPS OF ENGINEERS
AFGHANISTAN ENGINEER DISTRICT

Mark	Description	Date	Appr.	Mark	Description	Date	Appr.

Designed by: Dwn by: Ckd by: Reviewed by: Submitted by:
Date: 5/19/10 Rev: 0
Design file no.
Drawing code:
File name: AF1024B-AR402LS
Plot date: 2010/06/08
Plot scale:

U.S. ARMY ENGINEER DISTRICT, AFGHANISTAN
CORPS OF ENGINEERS
APO AE 96338

STANDARD DESIGN
VARIOUS PROJECTS
VARIOUS LOCATIONS, AFGHANISTAN

NCO BARRACK

AF1024B-AR402LS – LAYOUT1

SHEET REFERENCE NUMBER:
B

R:\ENGINEERING\26 STANDARD DESIGNS\A-E STANDARD DESIGNS\NCO BARRACKS\AF1024B-AR402LS.DWG

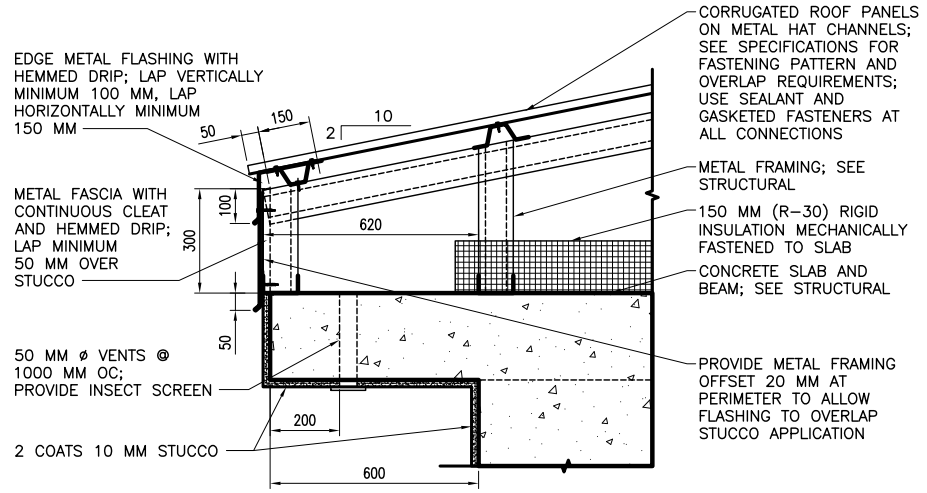

EAVE DETAIL (1 / A-401)
SCALE: 1:10

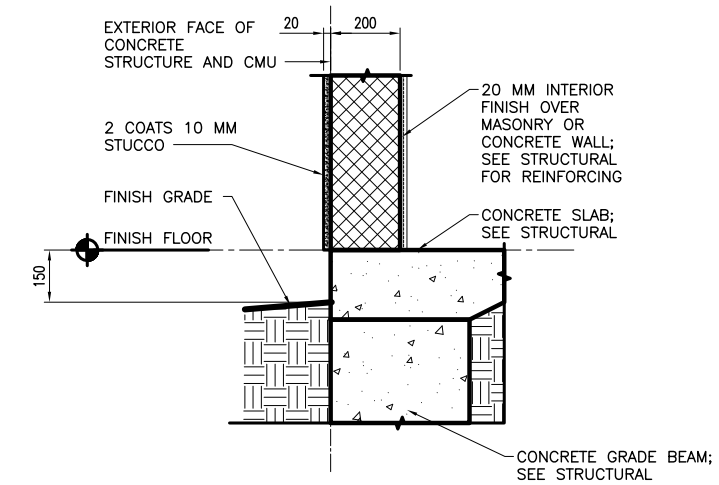

STUCCO BASE DETAIL (2 / A-401)
SCALE: 1:10

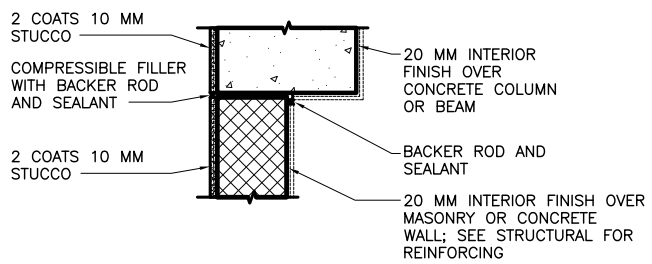

NOTE: DETAIL TYPICAL AT ALL WALL/COLUMN AND WALL/BEAM LOCATIONS.

STUCCO JOINT DETAIL (2A / A-201,A-401)
SCALE: 1:10

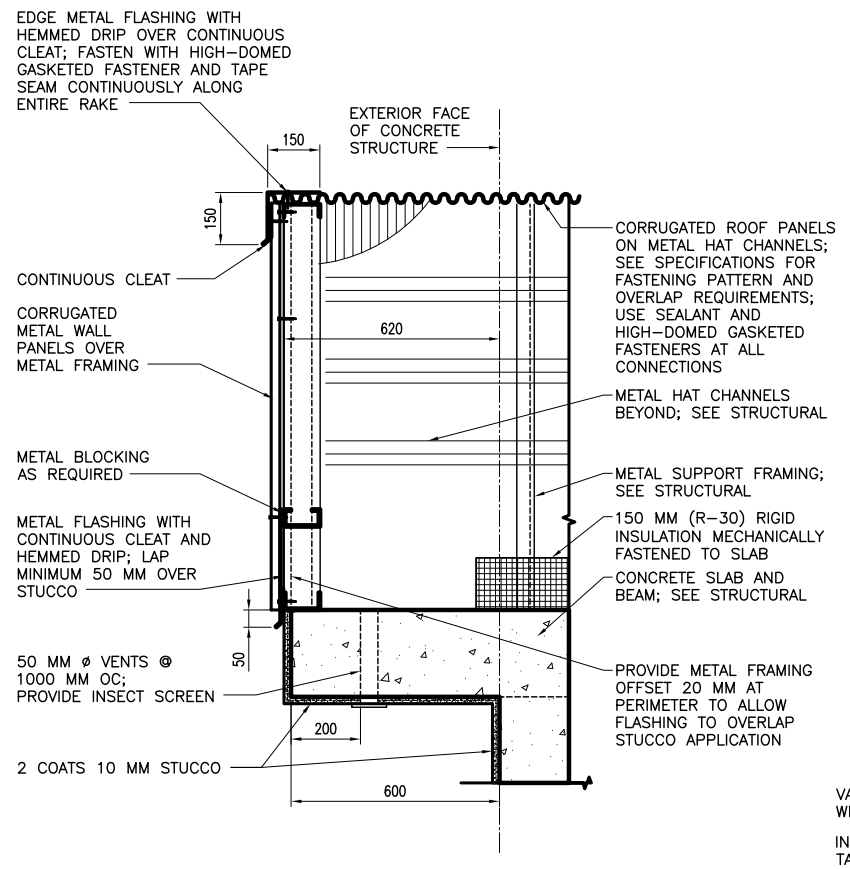

RAKE EAVE DETAIL (3 / A-401)
SCALE: 1:10

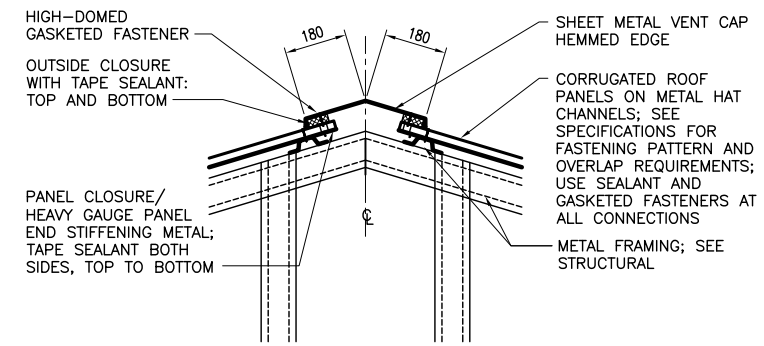

RIDGE VENT DETAIL (4 / A-102,A-201)
SCALE: 1:10

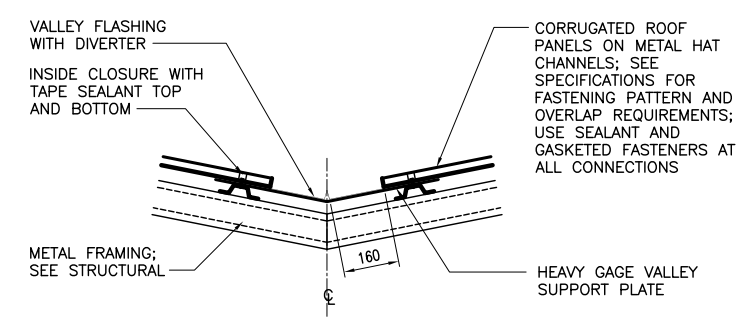

VALLEY DETAIL (6 / A-102)
SCALE: 1:10

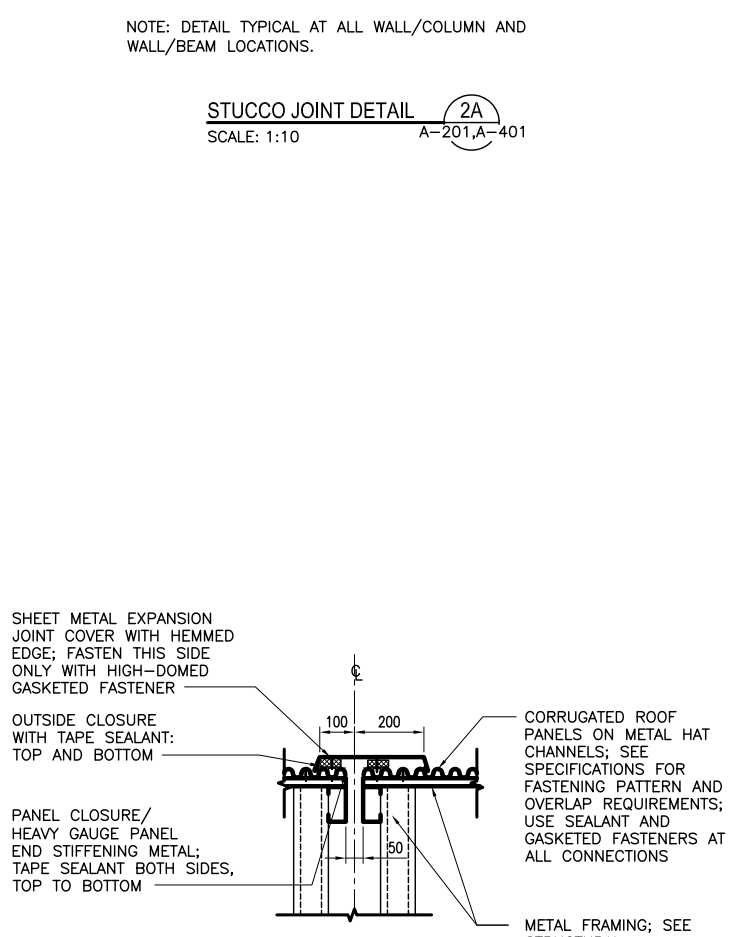

ROOF EXPANSION JOINT DETAIL (4A / A-102)
SCALE: 1:10

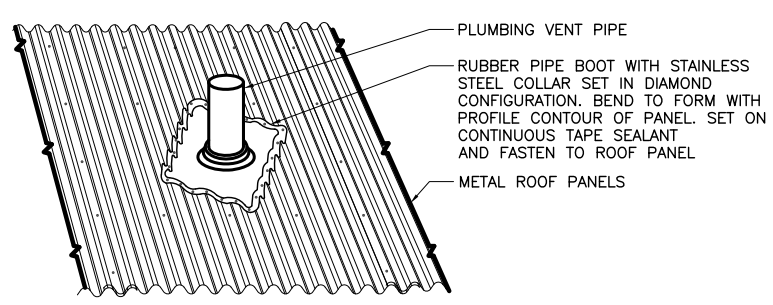

PLUMBING VENT DETAIL (5 / A-102)
SCALE: NONE

0 .50 1.00
1:10

UNLESS NOTED OTHERWISE, LINEAR DIMENSIONS SHOWN ARE IN MILLIMETERS.

APPROVED:

A/E DESIGNER OF RECORD

SEAL:

US ARMY CORPS OF ENGINEERS
AFGHANISTAN ENGINEER DISTRICT

Mark	Description	Date	Appr.	Mark	Description	Date	Appr.

Designed by:
Dwn by: Ckd by:
Reviewed by:
Submitted by:
Date: 5/19/10 Rev: 0
Design file no.
Drawing code:
File name: AF1024B-AR501DT
Plot date: 2010/06/06
Plot scale:

U.S. ARMY ENGINEER DISTRICT, AFGHANISTAN
CORPS OF ENGINEERS
APO AE 96338

STANDARD DESIGN
VARIOUS PROJECTS
VARIOUS LOCATIONS, AFGHANISTAN

NCO BARRACK

AF1024B-AR501DT - LAYOUT1

SHEET REFERENCE NUMBER:
B

R:\ENGINEERING\26 STANDARD DESIGNS\A-E STANDARD DESIGNS\NCO BARRACKS\AF1024B-AR501DT.DWG

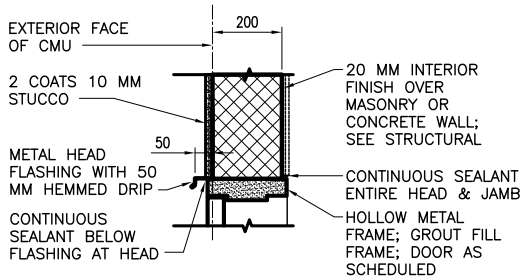

HEAD

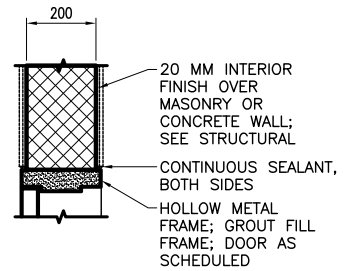

HEAD

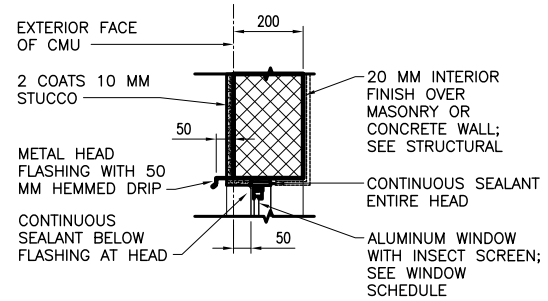

HEAD

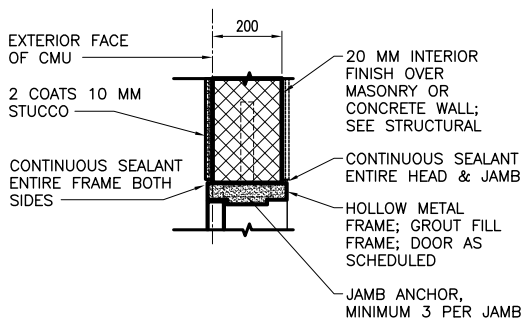

JAMB

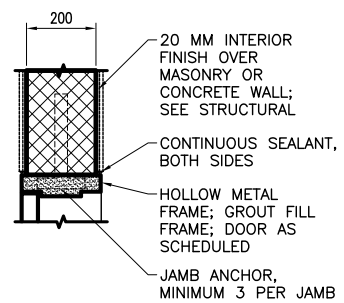

JAMB

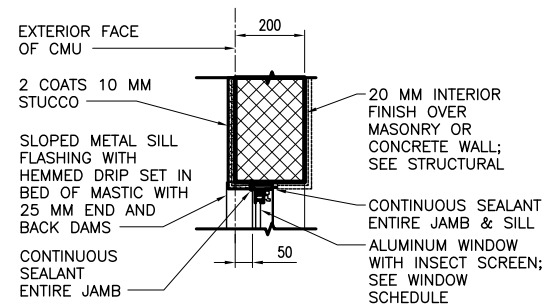

JAMB

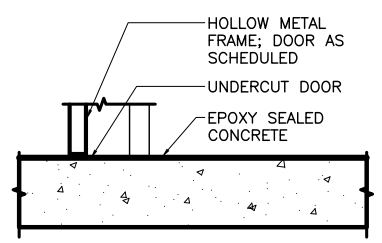

THRESHOLD

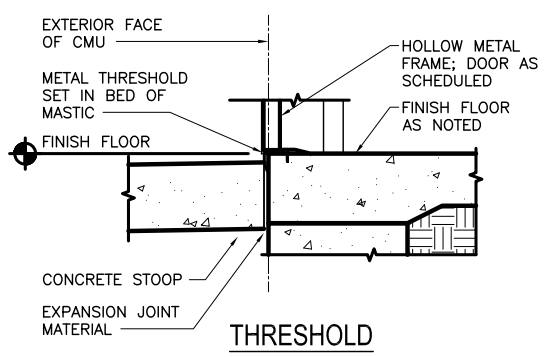

THRESHOLD

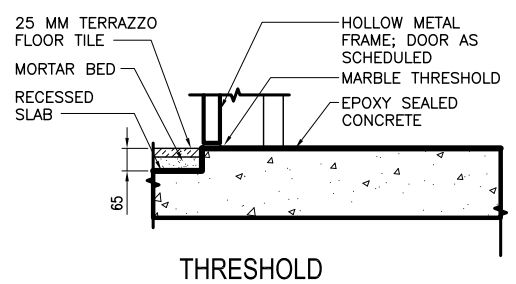

THRESHOLD

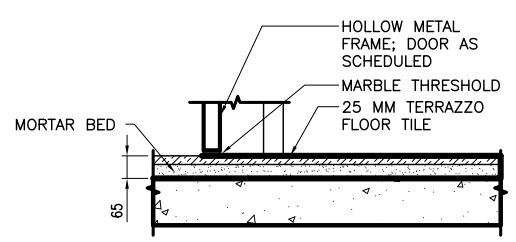

THRESHOLD

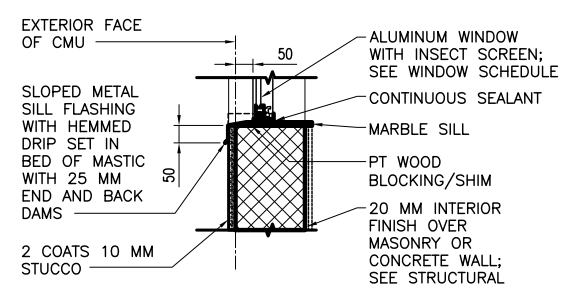

SILL

EXTERIOR DOOR DETAILS (1)
SCALE: 1:10

INTERIOR DOOR DETAILS (2)
SCALE: 1:10

EXTERIOR WINDOW DETAILS (3 / A-401)
SCALE: 1:10

0 .50 1.00
1:10

UNLESS NOTED OTHERWISE, LINEAR DIMENSIONS SHOWN ARE IN MILLIMETERS.

APPROVED:

A/E DESIGNER OF RECORD

SEAL:

US ARMY CORPS OF ENGINEERS
AFGHANISTAN ENGINEER DISTRICT

Mark	Description	Date	Appr.	Mark	Description	Date	Appr.

U.S. ARMY ENGINEER DISTRICT, AFGHANISTAN
CORPS OF ENGINEERS
APO AE 96338

Designed by: Date: 5/19/10 Rev: 0
Dwn by: Ckd by: Design file no.
Reviewed by: Drawing code:
Submitted by: File name: AF1024B-AR502DT
Plot date: 2010/06/06
Plot scale:

STANDARD DESIGN
VARIOUS PROJECTS
VARIOUS LOCATIONS, AFGHANISTAN

NCO BARRACK

AF1024B-AR502DT - LAYOUT1

SHEET REFERENCE NUMBER:
B

R:\ENGINEERING\26 STANDARD DESIGNS\A-E STANDARD DESIGNS\NCO BARRACKS\AF1024B-AR502DT.DWG

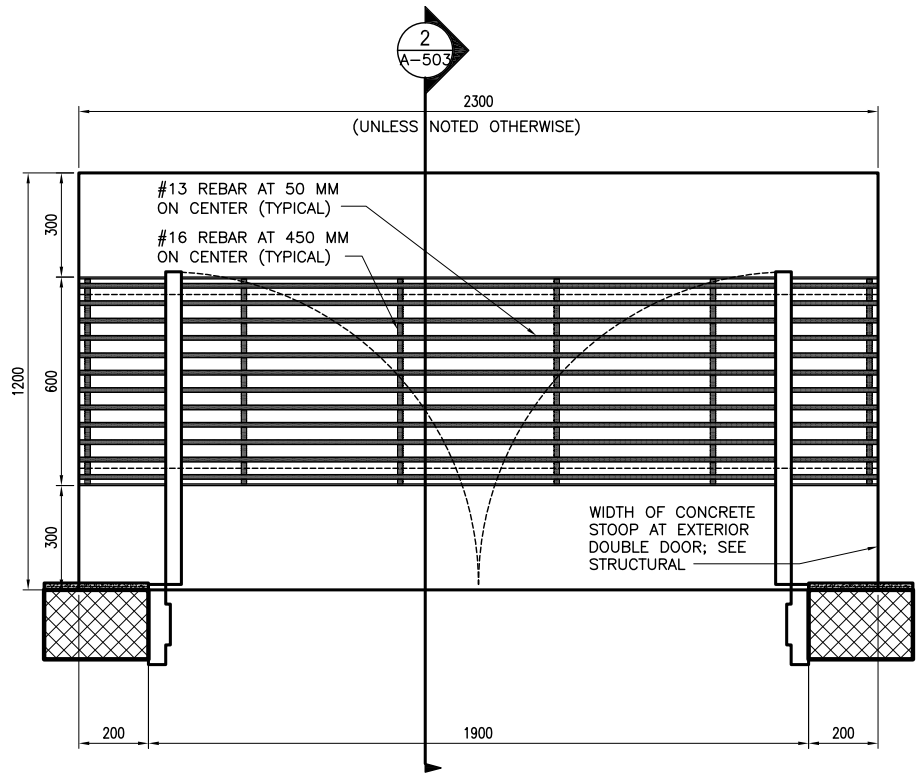

DOOR STOOP PLAN (WITH GRATE) 1 A-101

SCALE: 1:10

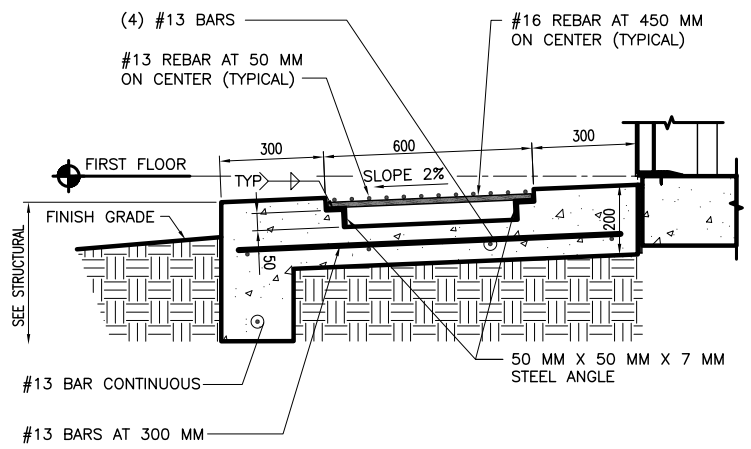

DOOR STOOP DETAIL 2

SCALE: 1:10

0 .50 1.00

1:10

UNLESS NOTED OTHERWISE, LINEAR DIMENSIONS SHOWN ARE IN MILLIMETERS.

APPROVED:

A/E DESIGNER OF RECORD

SEAL:

US ARMY CORPS OF ENGINEERS
AFGHANISTAN ENGINEER DISTRICT

Mark	Description	Date	Appr.	Mark	Description	Date	Appr.

U.S. ARMY ENGINEER DISTRICT, AFGHANISTAN
CORPS OF ENGINEERS
APO AE 96338

Designed by: Date: 5/19/10 Rev: 0
Dwn by: Ckd by: Design file no.
Reviewed by: Drawing code:
Submitted by: File name: AF1024B-AR503DT
Plot date: 2010/06/06
Plot scale:

STANDARD DESIGN
VARIOUS PROJECTS
VARIOUS LOCATIONS, AFGHANISTAN

NCO BARRACK

AF1024B-AR503DT - LAYOUT1

SHEET REFERENCE NUMBER:
B

R:\ENGINEERING\26 STANDARD DESIGNS\A-E STANDARD DESIGNS\NCO BARRACKS\AF1024B-AR503DT.DWG

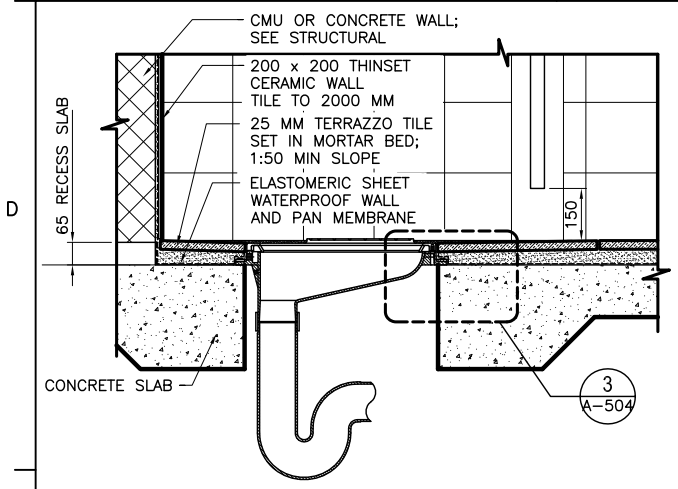

LATRINE DETAIL 1
SCALE: 1:10

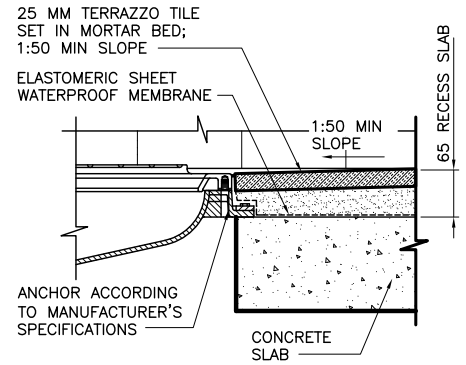

MOUNTING DETAIL 3
SCALE: 1:5

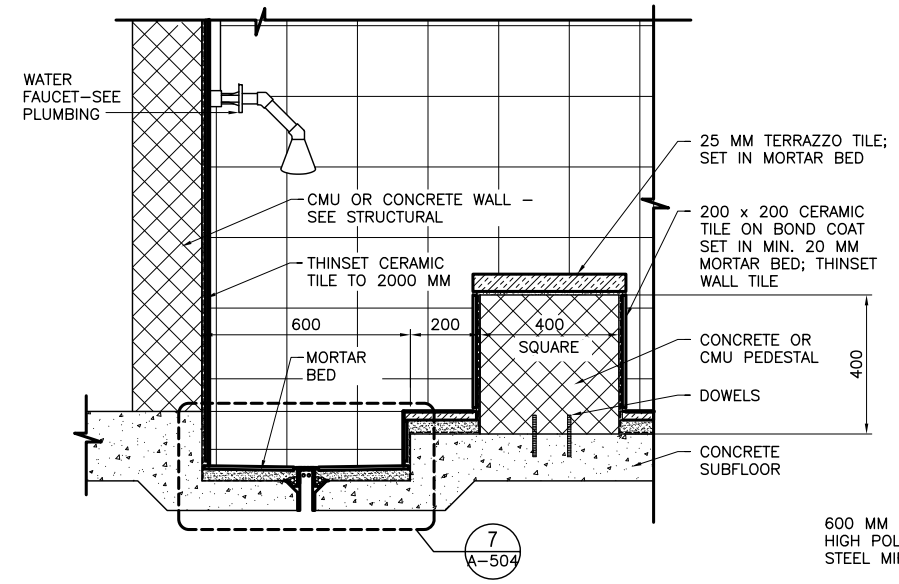

ABLUTION DETAIL 6
SCALE: 1:10
A-402

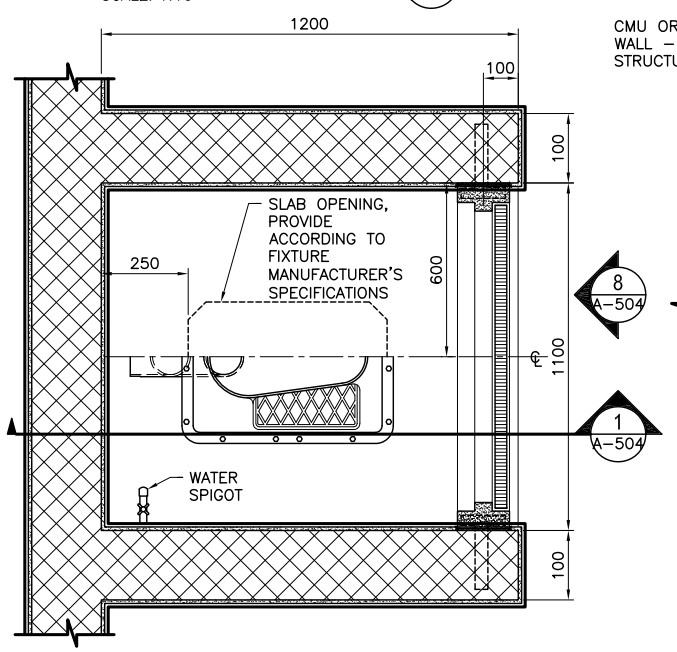

TOILET DETAIL 2
SCALE: 1:10
A-402

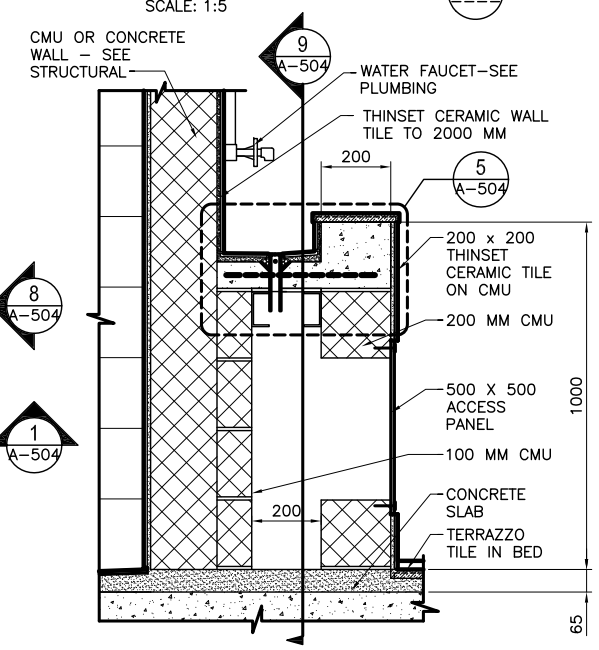

LAVATORY SECTION 4
SCALE: 1:10
A-402

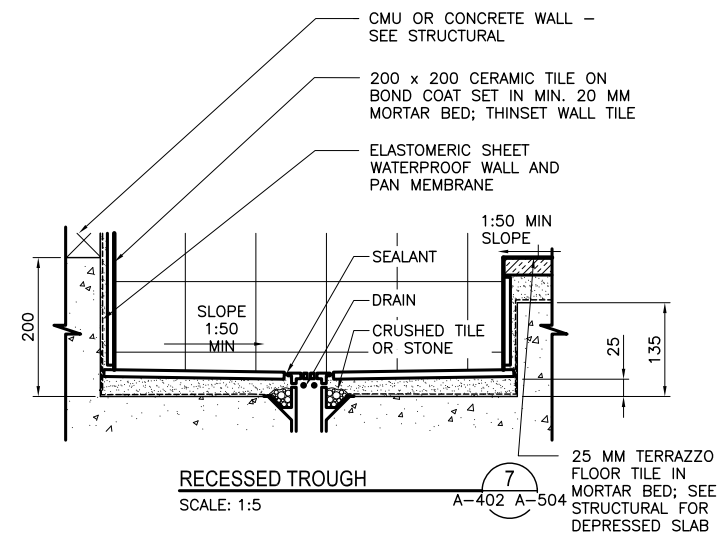

RECESSED TROUGH 7
SCALE: 1:5
A-402 A-504

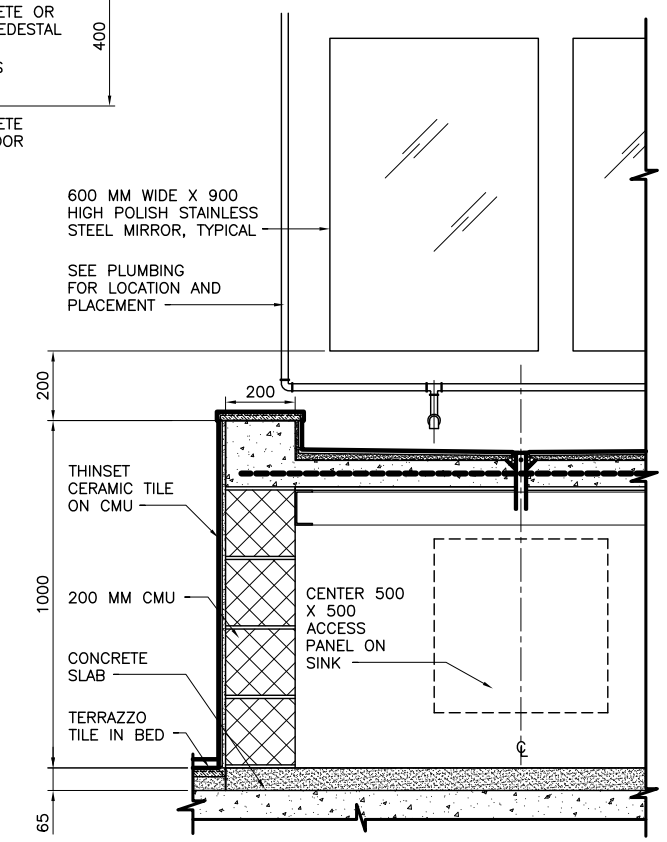

LAVATORY SECTION 9
SCALE: 1:10

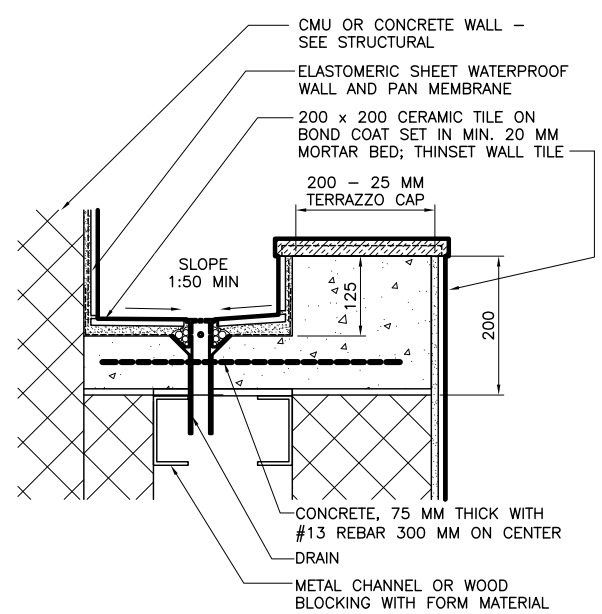

LAVATORY DETAIL 5
SCALE: 1:5

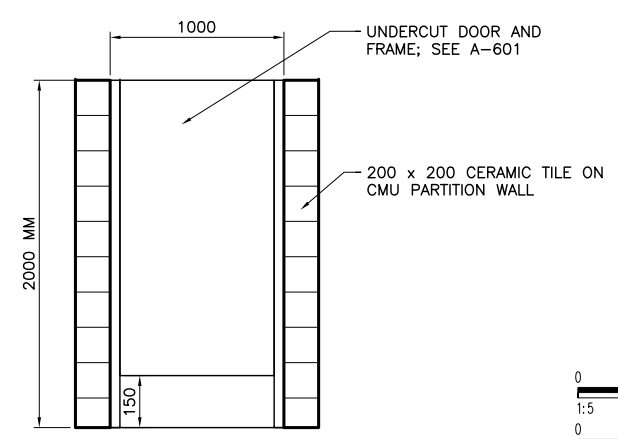

TOILET PARTITION DOOR ELEVATION 8
SCALE: 1:20

NOTE:

1. FOR TOILET FIXTURE ORIENTATION DETAILS, SEE SHEET P-501.

0 .10 .20 .30 .40 1
1:5
0 .50 1.00
1:10
1 .50 0 1
1:20

UNLESS NOTED OTHERWISE, LINEAR DIMENSIONS SHOWN ARE IN MILLIMETERS.

APPROVED:

A/E DESIGNER OF RECORD

SEAL:

US ARMY CORPS OF ENGINEERS
AFGHANISTAN ENGINEER DISTRICT

Mark	Description	Date	Appr.	Mark	Description	Date	Appr.

Rev: 0
Date: 5/19/10
Design file no.
Drawing code:
File name: AF1024B-AR504DT
Plot date: 2010/06/08
Plot scale:

Designed by:
Dwn by: Ckd by:
Reviewed by:
Submitted by:

U.S. ARMY ENGINEER DISTRICT, AFGHANISTAN
CORPS OF ENGINEERS
APO AE 96338

STANDARD DESIGN
VARIOUS PROJECTS
VARIOUS LOCATIONS, AFGHANISTAN

NCO BARRACK

AF1024B–AR504DT – LAYOUT1

SHEET REFERENCE NUMBER:
B

R:\ENGINEERING\26 STANDARD DESIGNS\A-E STANDARD DESIGNS\NCO BARRACKS\AF1024B-AR504DT.DWG

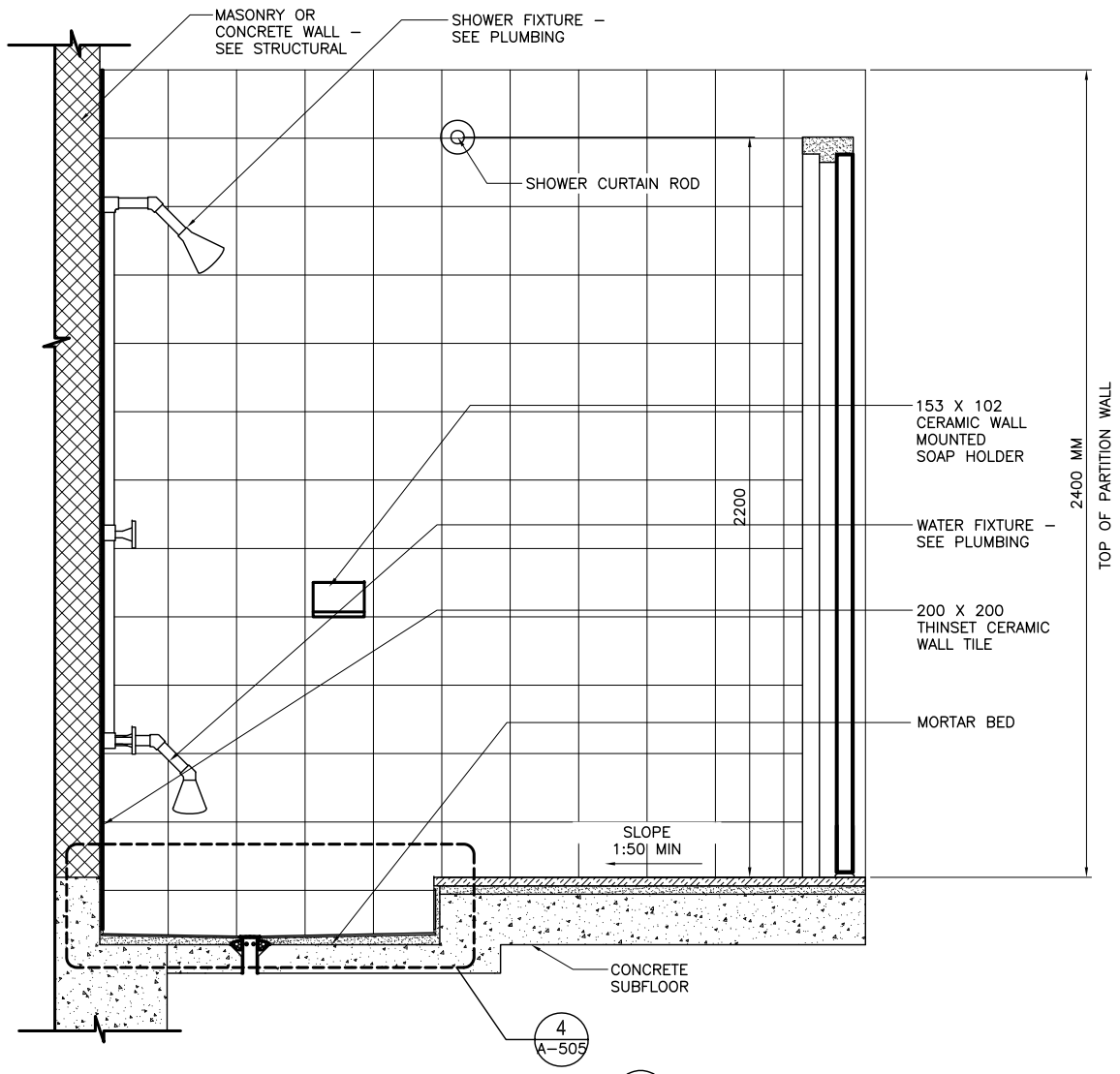

SHOWER DETAIL 1
SCALE: 1:10

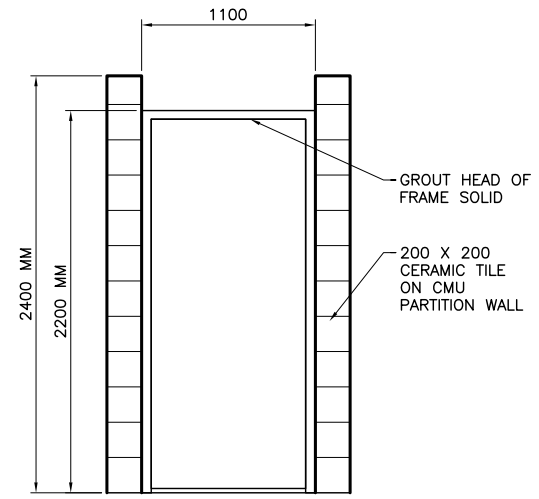

SHOWER PARTITION DOOR ELEVATION 3
SCALE: 1:20

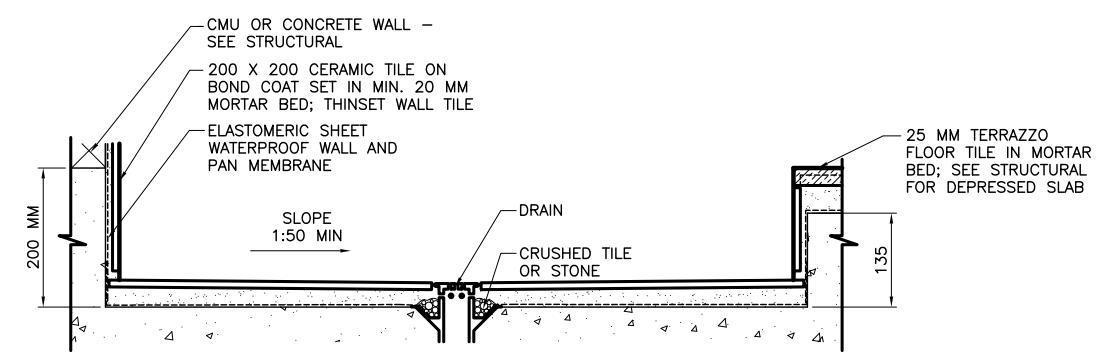

SHOWER RECESS 4
SCALE: 1:5

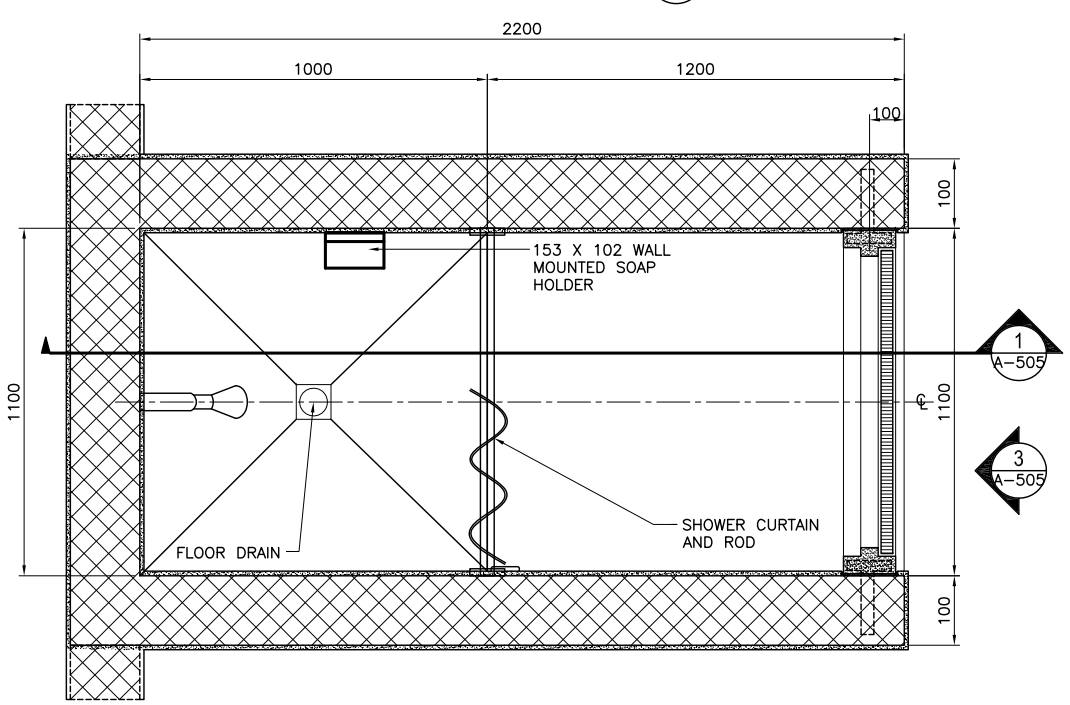

SHOWER PLAN 2
SCALE: 1:10
A-402

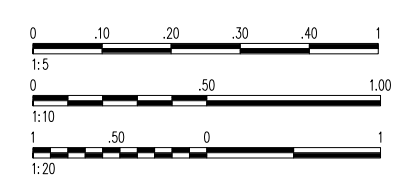

UNLESS NOTED OTHERWISE, LINEAR DIMENSIONS SHOWN ARE IN MILLIMETERS.

APPROVED:

A/E DESIGNER OF RECORD

SEAL:

US ARMY CORPS OF ENGINEERS
AFGHANISTAN ENGINEER DISTRICT

Mark	Description	Date	Appr.	Mark	Description	Date	Appr.

Designed by:
Dwn by: Ckd by:
Reviewed by:
Submitted by:
Date: 5/19/10 Rev: 0
Design file no.
Drawing code:
File name: AF1024B-AR505DT
Plot date: 2010/06/08
Plot scale:

U.S. ARMY ENGINEER DISTRICT, AFGHANISTAN
CORPS OF ENGINEERS
APO AE 96338

STANDARD DESIGN
VARIOUS PROJECTS
VARIOUS LOCATIONS, AFGHANISTAN

NCO BARRACK

AF1024B–AR505DT – LAYOUT1

SHEET REFERENCE NUMBER:
B

R:\ENGINEERING\26 STANDARD DESIGNS\A-E STANDARD DESIGNS\NCO BARRACKS\AF1024B-AR505DT.DWG

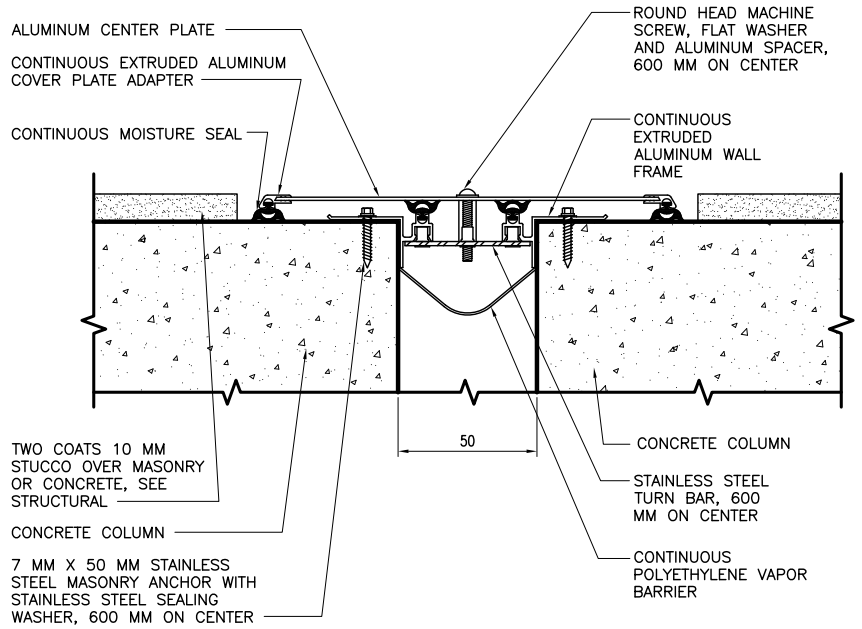

EXTERIOR EXPANSION JOINT COVER (1)
SCALE: NONE

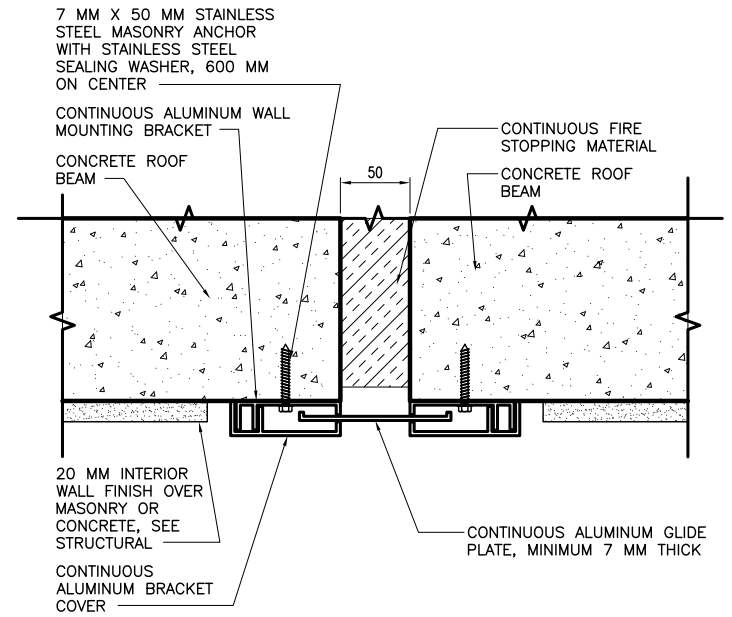

CEILING EXPANSION JOINT COVER (3)
SCALE: NONE

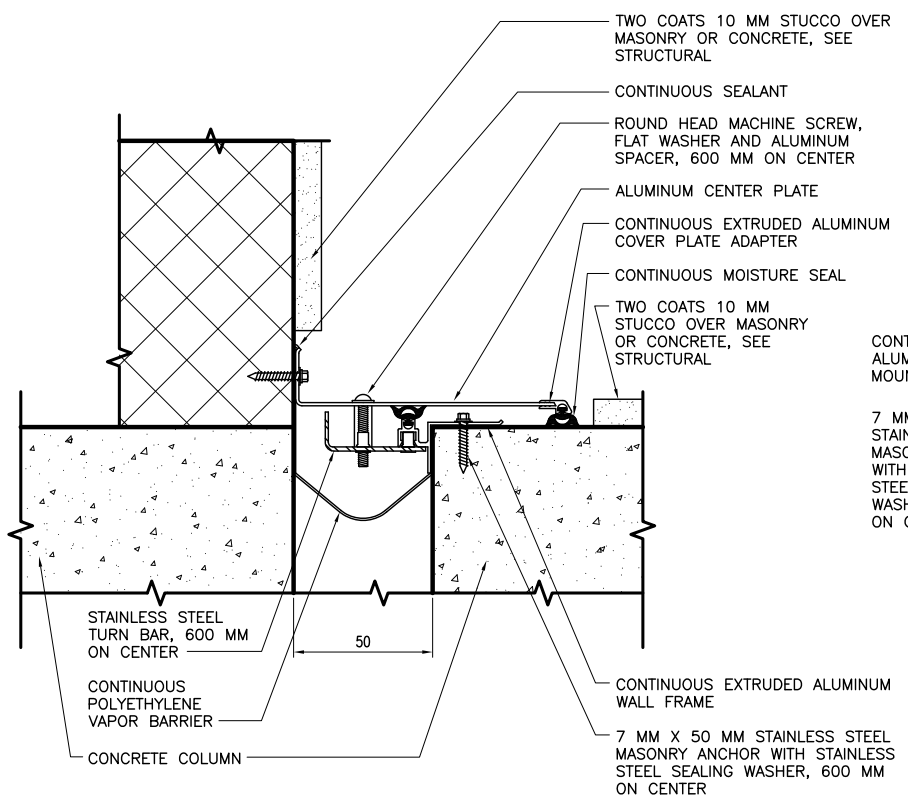

EXTERIOR EXPANSION JOINT COVER AT INSIDE CORNER (2)
SCALE: NONE

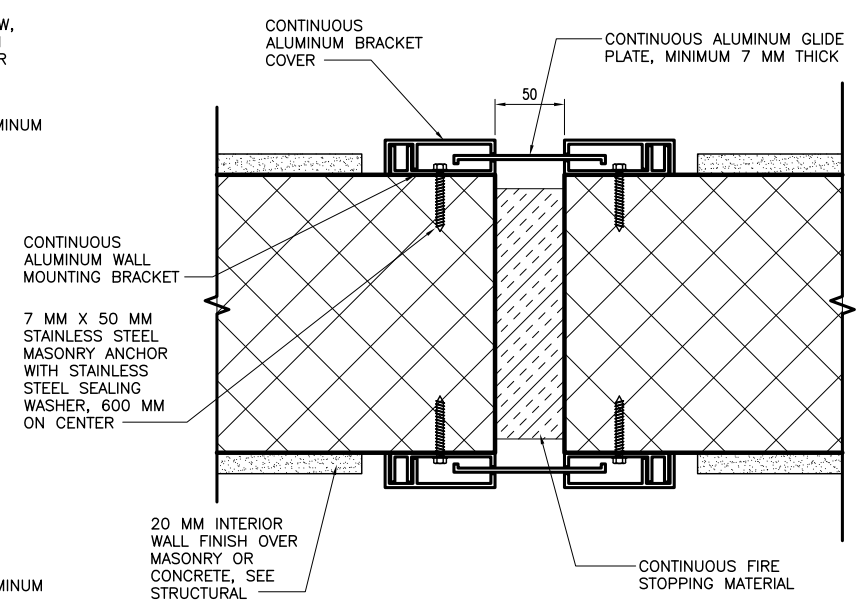

INTERIOR EXPANSION JOINT COVER (4)
SCALE: NONE

UNLESS NOTED OTHERWISE, LINEAR DIMENSIONS SHOWN ARE IN MILLIMETERS.

APPROVED:

A/E DESIGNER OF RECORD

SEAL:

US ARMY CORPS OF ENGINEERS
AFGHANISTAN ENGINEER DISTRICT

Mark	Description	Date	Appr.	Mark	Description	Date	Appr.

U.S. ARMY ENGINEER DISTRICT, AFGHANISTAN
CORPS OF ENGINEERS
APO AE 96338

Designed by: | Date: 5/19/10 | Rev: 0
Dwn by: | Ckd by: | Design file no.
Reviewed by: | Drawing code:
Submitted by: | File name: AF1024B-AR506DT | Plot date: 2010/06/08 | Plot scale:

STANDARD DESIGN
VARIOUS PROJECTS
VARIOUS LOCATIONS, AFGHANISTAN

NCO BARRACK

AF1024B–AR506DT – LAYOUT1

SHEET REFERENCE NUMBER:
B

R:\ENGINEERING\26 STANDARD DESIGNS\A-E STANDARD DESIGNS\NCO BARRACKS\AF1024B-AR506DT.DWG

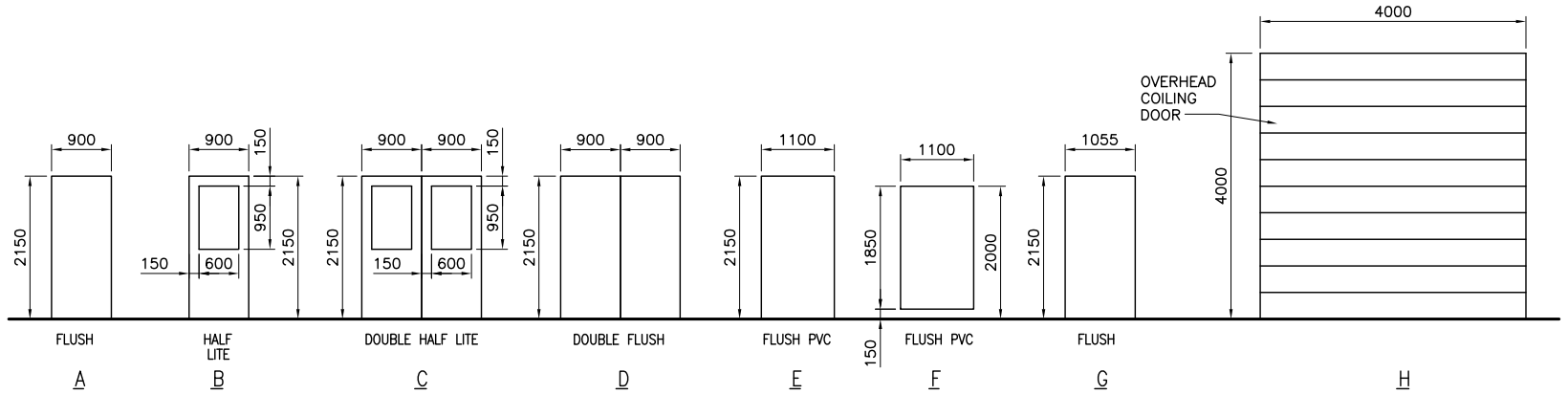

DOOR TYPES 1
SCALE: 1:50

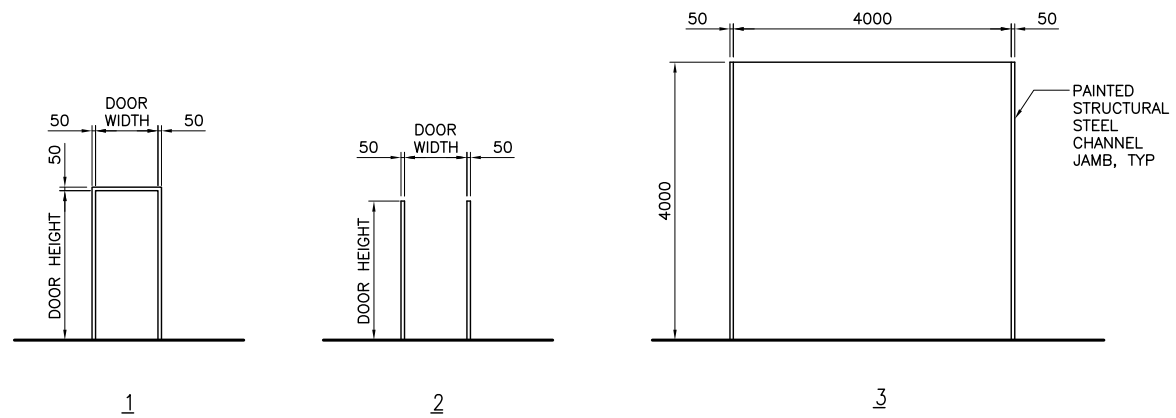

FRAME TYPES 2
SCALE: 1:50

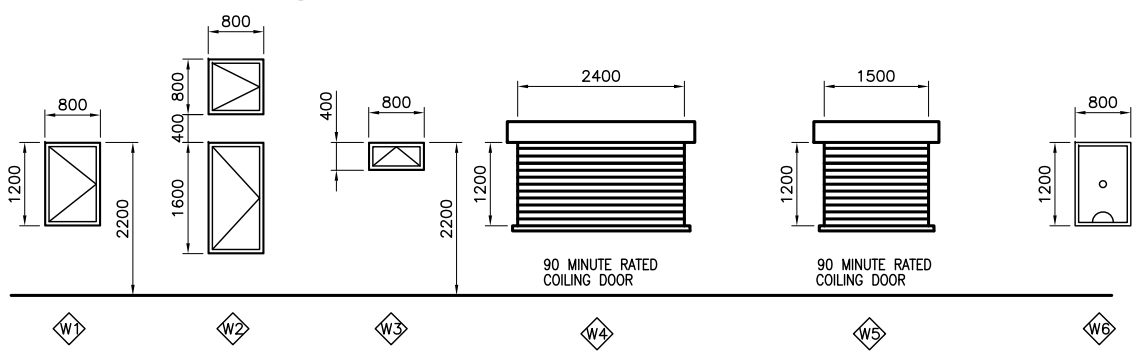

WINDOW TYPES 3
SCALE: 1:50

WINDOW TYPE NOTES:

1. ALL EXTERIOR WINDOWS SHALL BE ALUMINUM WITH INSECT SCREENS. WINDOWS SHALL BE COMMERCIAL GRADE.
2. ALL EXTERIOR WINDOWS SHALL BE OPERABLE.

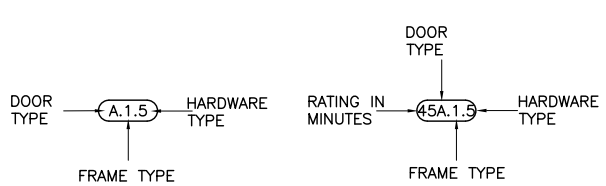

DOOR TAG 4
SCALE: NONE

RATED DOOR TAG 5
SCALE: NONE

DOOR TAG NOTES:

1. THE DOOR TAG INDICATES THE DOOR TYPE, FRAME TYPE AND HARDWARE SET FOR EACH DOOR.
2. THE DOOR TAG FOR RATED DOORS INCLUDES THE RATING OF THE DOOR IN MINUTES.

EXTERIOR DOOR HARDWARE TYPES:

HW–1
1–1/2 PR HINGES, A5112 114 X 114
1 EA RIM EXIT DEVICE, TYPE 1
1 EA CYLINDER. E09221A, GRADE 1
1 EA OVERHEAD CLOSER, C02061, LOW RESISTANCE
1 EA THRESHOLD, J32130
3 EA DOOR SILENCERS, L03011

HW–2
1–1/2 PR HINGES, A5112 114 X 114
1 EA LOCKSET, F13 ENTRY LOCK W/LEVER HANDLES, GRADE 1
1 EA OVERHEAD CLOSER, C02061, LOW RESISTANCE
1 EA THRESHOLD, J32130
3 EA DOOR SILENCERS, L03011

HW–3
3 PR HINGES, A5112 114 X 114
2 EA RIM EXIT DEVICE, TYPE 1
2 EA CYLINDER. GRADE 1
2 EA OVERHEAD CLOSER, C02061, LOW RESISTANCE
1 EA DOOR COORDINATOR, TYPE 21
1 EA ASTRAGAL
1 EA THRESHOLD, J32130
2 EA DOOR SILENCERS, L03011

HW–4
3 PR HINGES, A5112 114 X 114
1 EA LOCKSET W/LEVER HANDLES. GRADE 1, F13
1 EA OVERHEAD CLOSER, C02061, LOW RESISTANCE
2 EA MAGNETIC HOLDER PIN, ATTACHED TO DOOR LEAF
2 EA MAGNETIC HOLDER RECEIVER, ATTACHED TO STOOP
2 EA LEVER EXTENSION FLUSH BOLTS, L04081
1 EA ASTRAGAL
1 EA THRESHOLD, J32130
2 EA DOOR SILENCERS, L03011

DOOR AND HARDWARE NOTES:

1. INTERIOR AND EXTERIOR METAL DOORS AND FRAME COLORS SHALL MATCH ADJACENT WALL COLORS AS SELECTED BY THE CONTRACTING OFFICER.
2. FRAMES, EXCEPT FIRE–RATED FRAMES, SHALL BE MOUNTED AND ADJUSTED IN ACCORDANCE WITH MANUFACTURER'S INSTRUCTIONS. FRAMES SHALL BE FASTENED WITH MINIMUM OF THREE ANCHORS PER JAMB AT EQUAL INTERVALS.
3. DIMENSIONS SHOWN ON DOOR TYPES DETAIL ARE BASED UPON MODULAR MASONRY (OR ROUGH OPENING), HEIGHT OF 2200 MM FOR STANDARD PERSONNEL DOORS. CONTRACTOR SHALL COORDINATE WITH DOOR SUPPLIER TO ENSURE THAT DIMENSIONS OF DOORS AND FRAMES PROVIDED ARE COMPATIBLE WITH DOOR OPENING DIMENSIONS.
4. HARDWARE SHALL BE HEAVY DUTY, COMMERCIAL GRADE, STAINLESS STEEL WITH A SATIN OR BRUSHED FINISH.
5. HARDWARE TYPES INCLUDE BUILDERS HARDWARE MANUFACTURERS ASSOCIATION (BMHA) NUMBER.
6. DOORS IN 2 HOUR RATED PARTITIONS SHALL BE 1.5 HOUR (90 MINUTE) RATED DOORS IN ACCORDANCE WITH NFPA 101, TABLE 8.3.4.2.
7. DOORS AT STAIR ENCLOSURES SHALL BE 1 HOUR (60 MINUTE) RATED AT 1 HOUR WALL IN ACCORDANCE WITH NFPA 101, TABLE 8.3.4.2.
8. DOORS IN 1 HOUR RATED WALLS SHALL BE 3/4 HOUR (45 MINUTE) RATED DOORS IN ACCORDANCE WITH NFPA 101, TABLE 8.3.4.2.
9. DOORS IN 1 HOUR RATED CORRIDOR WALLS SHALL BE 1/3 HOUR (20 MINUTE) IN ACCORDANCE WITH NFPA 101, TABLE 8.3.4.2.
10. PROVIDE DOOR STOPS TO PROTECT WALLS ON LOCATIONS WHERE DOOR SWING WILL STRIKE WALL.

THIS SHEET IS A STANDARD DOOR/ WINDOW/ HARDWARE DRAWING. CONTRACTOR SHALL REFER TO THE FLOOR PLANS FOR THE TYPES BEING USED.

INTERIOR DOOR HARDWARE TYPES:

HW–5
1–1/2 PR HINGES, A8133 114 X 114
1 EA LOCKSET W/LEVER HANDLES, F08, GRADE 1
1 EA WALL STOP, L02101 OR L02161
3 EA DOOR SILENCERS, L03011

HW–6
1–1/2 PR HINGES, A8112 114 X 114
1 EA LOCKSET W/LEVER HANDLES, F08, GRADE 1
1 EA WALL STOP, L02101 OR L02161
1 EA OVERHEAD CLOSER, C02061, LOW RESISTANCE
3 EA DOOR SILENCERS, L03011

HW–7
1–1/2 PR HINGES, A8133
1 EA LOCKSET W/LEVER HANDLES, F13 GRADE 1
1 EA WALL STOP, L02101 OR L02161
2 EA MOP PLATE, J103
3 EA DOOR SILENCERS, L03011

HW–8
1–1/2 PR HINGES, A8112
1 EA LOCKSET W/LEVER HANDLES, F13 GRADE 1
1 EA WALL STOP, L02101 OR L02161
2 EA MOP PLATE, J103
1 EA OVERHEAD CLOSER, C02061, LOW RESISTANCE
3 EA DOOR SILENCERS, L03011

HW–9
1–1/2 PR HINGES, A5112 114 X 114
1 EA RIM EXIT DEVICE, TYPE 1
1 EA CYLINDER. E09221A, GRADE 1
1 EA OVERHEAD CLOSER, C02061, LOW RESISTANCE
3 EA DOOR SILENCERS, L03011

HW–10
3 PR HINGES, A5112 114 X 114
1 EA LOCKSET W/LEVER HANDLES. GRADE 1, F13
2 EA LEVER EXTENSION FLUSH BOLTS, L04081
1 EA ASTRAGAL
2 EA DOOR SILENCERS, L03011

HW–11
1–1/2 PR HINGES, A8112 114 X 114
1 EA LOCKSET W/LEVER HANDLES, F13, GRADE 1
1 EA WALL STOP, L02101 OR L02161
1 EA OVERHEAD CLOSER, C02061, LOW RESISTANCE
3 EA DOOR SILENCERS, L03011
1 EA ROBE HOOK

HW–12
1–1/2 PR HINGES, A8133
1 EA LATCHSET W/LEVER HANDLES, F76 GRADE 1
1 EA WALL STOP, L02101 OR L02161
2 EA MOP PLATE, J103
3 EA DOOR SILENCERS, L03011
1 EA ROBE HOOK

HW–13
3 PR HINGES, A5112 114 X 114
1 EA LOCKSET W/LEVER HANDLES. GRADE 1, F13
1 EA OVERHEAD CLOSER, C02061, LOW RESISTANCE
2 EA LEVER EXTENSION FLUSH BOLTS, L04081
1 EA ASTRAGAL
2 EA DOOR SILENCERS, L03011

HW–14
3 PR HINGES, A5112 114 X 114
2 EA RIM EXIT DEVICE, TYPE 1
2 EA CYLINDER. GRADE 1
2 EA OVERHEAD CLOSER, C02061, LOW RESISTANCE
1 EA DOOR COORDINATOR, TYPE 21
1 EA ASTRAGAL
2 EA DOOR SILENCERS, L03011

1 0 1 2 3 4
1:50

UNLESS NOTED OTHERWISE, LINEAR DIMENSIONS SHOWN ARE IN MILLIMETERS.

APPROVED:

A/E DESIGNER OF RECORD

SEAL:

US ARMY CORPS OF ENGINEERS
AFGHANISTAN ENGINEER DISTRICT

Mark	Description	Date	Appr.	Mark	Description	Date	Appr.

Designed by: Date: 5/19/10 Rev: 0
Dwn by: Ckd by: Design file no.
Ckd by: Drawing code:
Reviewed by: File name: AF1024B-AR601DT
Submitted by: Plot date: 2010/06/08
Plot scale:

U.S. ARMY ENGINEER DISTRICT, AFGHANISTAN
CORPS OF ENGINEERS
APO AE 96338

STANDARD DESIGN
VARIOUS PROJECTS
VARIOUS LOCATIONS, AFGHANISTAN

NCO BARRACK

AF1024B–AR601DT – LAYOUT1

SHEET REFERENCE NUMBER:
B

R:\ENGINEERING\26 STANDARD DESIGNS\A-E STANDARD DESIGNS\NCO BARRACKS\AF1024B-AR601DT.DWG

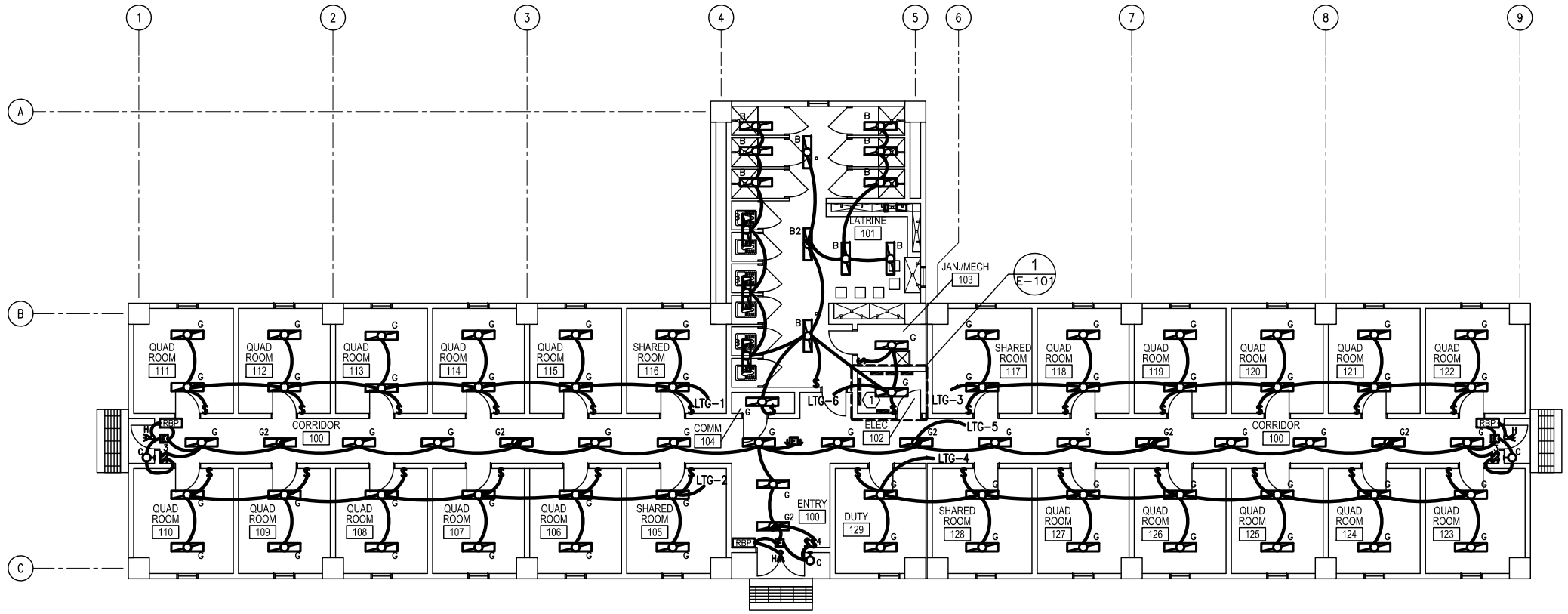

NUMBERED NOTES:

1. PANELS MDB AND LTG

GENERAL NOTES:

1. REFER TO DRAWING E-001 FOR THE ELECTRICAL SYMBOLS LIST.
2. EXIT SIGNS SHALL BE WIRED AHEAD OF ANY LOCAL SWITCHING ON CIRCUITS. SEE WIRING DIAGRAM DETAIL 7, DRAWING E-501.
3. REFER TO DRAWING E-601 FOR THE LIGHTING FIXTURE SCHEDULE.
4. REFER TO DRAWING E-501 FOR THE POWER RISER.
5. REFER TO DRAWINGS E-602, E-603, AND E-604 FOR PANEL SCHEDULES.
6. LIGHT FIXTURES INDICATED AS EMERGENCY SHALL BE PROVIDED WITH A BATTERY BACKUP BALLAST. SEE WIRING DIAGRAM DETAIL 6, DRAWING E-501.

LIGHTING PLAN
SCALE: 1:100

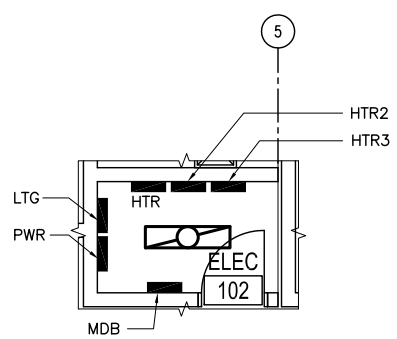

POWER AND SYSTEMS ENLARGED PLAN (1 / E-101)
SCALE: NONE

1 0 1 2 3 4 5 6 7 8 9
1:100

UNLESS NOTED OTHERWISE, LINEAR DIMENSIONS SHOWN ARE IN MILLIMETERS.

APPROVED:

A/E DESIGNER OF RECORD

SEAL:

US ARMY CORPS OF ENGINEERS
AFGHANISTAN ENGINEER DISTRICT

Mark	Description	Date	Appr.	Mark	Description	Date	Appr.

Designed by: Date: 5/19/10 Rev: 0
Dwn by: Ckd by: Design file no.
Reviewed by: Drawing code:
Submitted by: File name: AF1024B-EL101PN Plot date: 2010/06/05 Plot scale:

U.S. ARMY ENGINEER DISTRICT, AFGHANISTAN
CORPS OF ENGINEERS
APO AE 96338

STANDARD DESIGN
VARIOUS PROJECTS
VARIOUS LOCATIONS, AFGHANISTAN

NCO BARRACK

AF1024B-EL101PN - LAYOUT1

SHEET REFERENCE NUMBER:
B

R:\ENGINEERING\26 STANDARD DESIGNS\A-E STANDARD DESIGNS\NCO BARRACKS\AF1024B-EL101PN.DWG

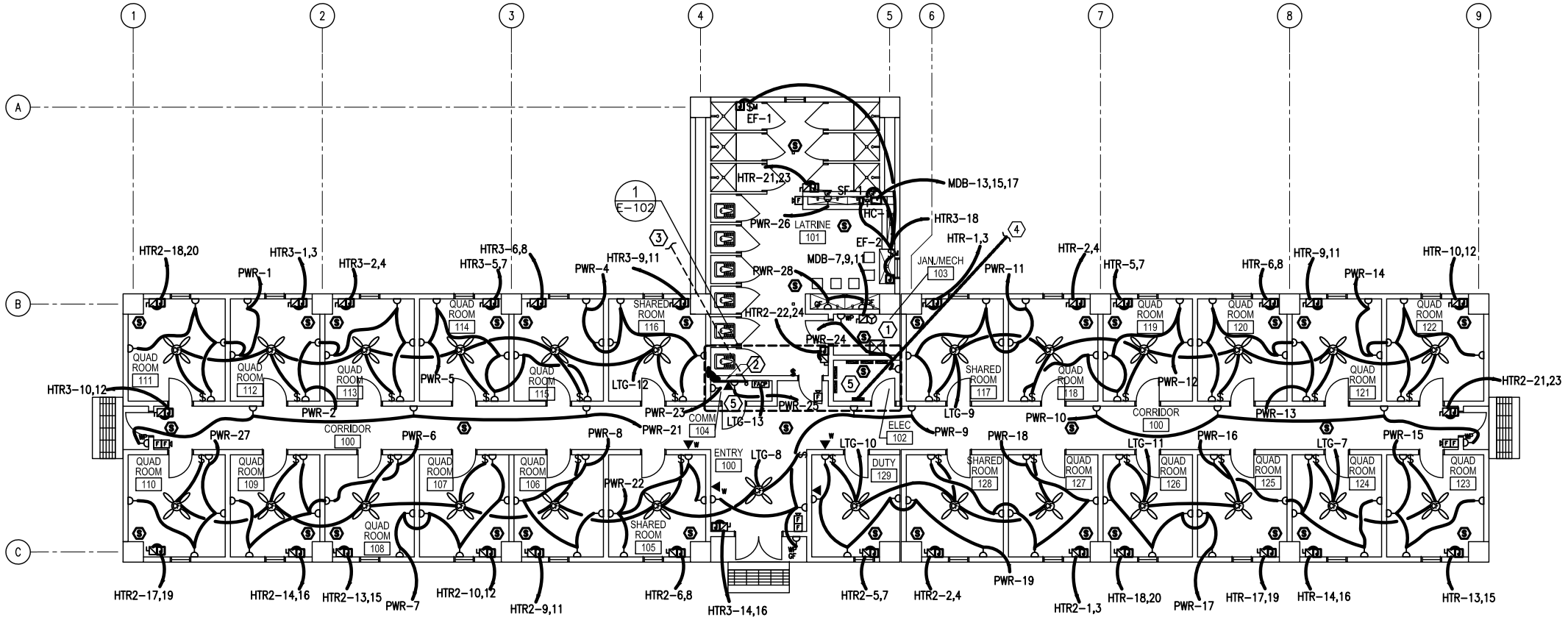

NUMBERED NOTES:

1. IP 21, 380V, 3P, 30A FUSED DISCONNECT FUSED AT 30A. SEE PLUMBING DRAWINGS FOR EXACT LOCATION OF WATER HEATER.
2. PROVIDE A 1,200mmX2,400mm PLYWOOD PAINTED WITH FIRE RESISTANT PAINT FOR MOUNTING TELECOMMUNICATIONS EQUIPMENT. EQUIPMENT TO BE BONDED TO UFER REBAR GROUND. FOR BONDING DETAILS SEE DRAWING E-502.
3. PROVIDE CONDUIT STUB UP IN THE ROOM FOR INCOMMING TELECOMMUNICATIONS SERVICES FROM THE CENTRAL COMMUNICATIONS SYSTEM IN THE GARRISON. PROVIDE 100mm PVC FROM COMM ROOM TO 2M OUTSIDE BUILDING.
4. CONNECT TO POINT OF SERVICE WITH TWO 100mm CONDUITS, ONE FOR FEEDER, ONE SPARE. PROVIDE 300 AMPERE FEEDER FROM SITE POWER DISTRIBUTION SOURCE WITH MINIMUM FOUR 185mm² (ABCN), ONE 25mm² (G). INCREASE CONDUCTOR SIZE AS NECESSARY TO PROVIDE MAXIMUM THREE PERCENT VOLTAGE DROP.
5. PANELS MDP, PWR, LTG, HTR, HTR1, HTR2, HTR3, IN ELECTRICAL ROOM.

GENERAL NOTES:

1. REFER TO DRAWING E-001 FOR THE ELECTRICAL SYMBOLS LIST.
2. REFER TO DRAWING E-501 FOR THE POWER RISER.
3. REFER TO DRAWING E-602, E-603, AND E-604 FOR PANEL SCHEDULES.
4. COORDINATE EXACT MOUNTING LOCATION OF DISCONNECTING MEANS FOR MECHANICAL AND PLUMBING EQUIPMENT IN THE FIELD.
5. FUSIBLE SAFETY SWITCHES THAT ARE NOT OTHERWISE IDENTIFIED SHALL BE 380V, 2P, 30A FUSED SAFETY SWITCHES WITH 20A FUSES.
6. UNIT HEATERS ARE SHOWN WHERE A JUNCTION BOX IS NEXT TO A DISCONNECT SWITCH. SEE HEATER TYPE ON MECHANICAL PLANS.
7. LOCATED SMOKE DETECTOR CLOSE TO CENTER OF CEILING, BUT AT LEAST 1000mm FROM CEILING FAN BLADE TIPS.
8. PROVIDE POWER CONNECTION FOR THERMOSTAT. SEE DRAWING M-101 FOR INFORMATION. PROVIDE 3# 4mm², 20mm CONDUIT.
9. SEE E-502 FOR GROUNDING REQUIREMENTS.

POWER AND SYSTEMS PLAN

SCALE: 1:100

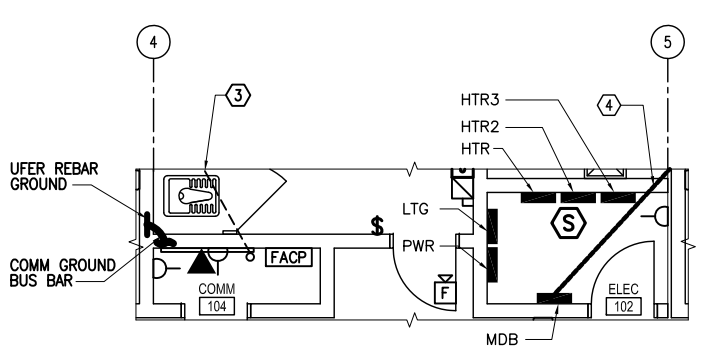

POWER AND SYSTEMS ENLARGED PLAN

SCALE: NONE

1 / E-102

1:100

UNLESS NOTED OTHERWISE, LINEAR DIMENSIONS SHOWN ARE IN MILLIMETERS.

APPROVED:

A/E DESIGNER OF RECORD

SEAL:

US ARMY CORPS OF ENGINEERS
AFGHANISTAN ENGINEER DISTRICT

Mark	Description	Date	Appr.	Mark	Description	Date	Appr.

U.S. ARMY ENGINEER DISTRICT, AFGHANISTAN
CORPS OF ENGINEERS
APO AE 96338

Designed by: Dwn by: Ckd by: Reviewed by: Submitted by:
Date: 5/19/10 Rev: 0
Design file no.
Drawing code:
File name: AF1024B-EP102PN
Plot date: 2010/06/08
Plot scale:

STANDARD DESIGN
VARIOUS PROJECTS
VARIOUS LOCATIONS, AFGHANISTAN

NCO BARRACK

AF1024B-EP102PN - LAYOUT1

SHEET REFERENCE NUMBER:
B

R:\ENGINEERING\26 STANDARD DESIGNS\A-E STANDARD DESIGNS\NCO BARRACKS\AF1024B-EP102PN.DWG

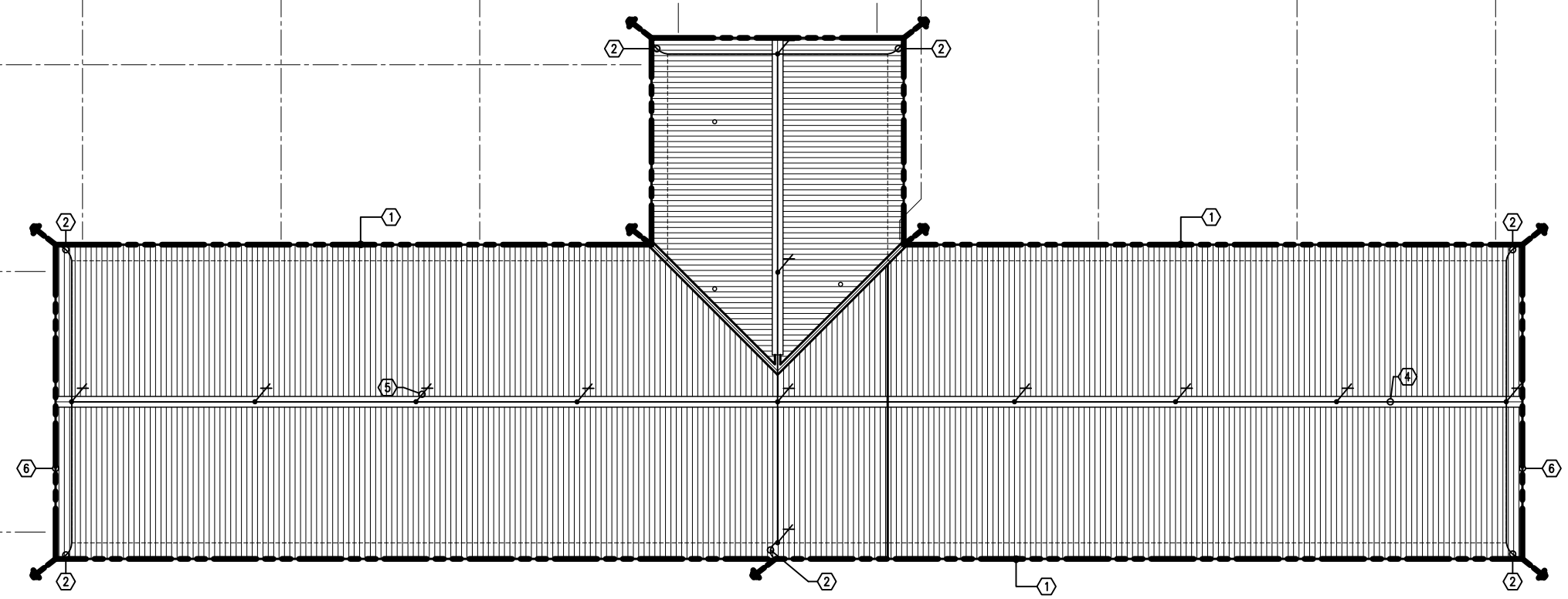

LIGHTNING PROTECTION PLAN
SCALE: 1:100

GENERAL NOTES:

1. REFER TO DRAWING E-001 FOR THE ELECTRICAL SYMBOLS LIST.

NUMBERED NOTES:

1. (1) 120.0mm² BARE, TINNED, COPPER COUNTERPOISE GROUND CONDUCTOR 700mm BELOW GRADE.
2. INSTALL DOWN CONDUCTOR IN 25mm SCHEDULE 80 PVC CONDUIT TO 20mm DIAMETER X 3 METERS SOLID COPPER TINNED GROUND ROD. (TYPICAL)
3. NOT USED.
4. SEE DETAIL 2, DRAWING E-501. (TYPICAL)
5. AIR TERMINAL. TERMINALS SHALL BE PLACED AT A MAXIMUM OF 6M ON CENTER PER NFPA 780 PARA. 4.8.2.1, AND WITHIN 0.6M OF RIDGE ENDS PER NFPA 780 PARA. 4.8 (TYPICAL)
6. 700mm MIN. (TYPICAL) BETWEEN FOUNDATION AND GROUND LOOP.

1 0 1 2 3 4 5 6 7 8 9
1:100

UNLESS NOTED OTHERWISE, LINEAR DIMENSIONS SHOWN ARE IN MILLIMETERS.

APPROVED:

A/E DESIGNER OF RECORD

SEAL:

US ARMY CORPS OF ENGINEERS
AFGHANISTAN ENGINEER DISTRICT

Mark	Description	Date	Appr.	Mark	Description	Date	Appr.

U.S. ARMY ENGINEER DISTRICT, AFGHANISTAN
CORPS OF ENGINEERS
APO AE 96338

Designed by: Dwn by: Ckd by: Reviewed by: Submitted by:
Date: 5/19/10 Rev: 0
Design file no.
Drawing code:
File name: AF1024B-EP103PN
Plot date: 2010/06/08
Plot scale:

STANDARD DESIGN
VARIOUS PROJECTS
VARIOUS LOCATIONS, AFGHANISTAN

NCO BARRACK

AF1024B-EP103PN - LAYOUT1

SHEET REFERENCE NUMBER:
B

R:\ENGINEERING\26 STANDARD DESIGNS\A-E STANDARD DESIGNS\NCO BARRACKS\AF1024B-EP103PN.DWG

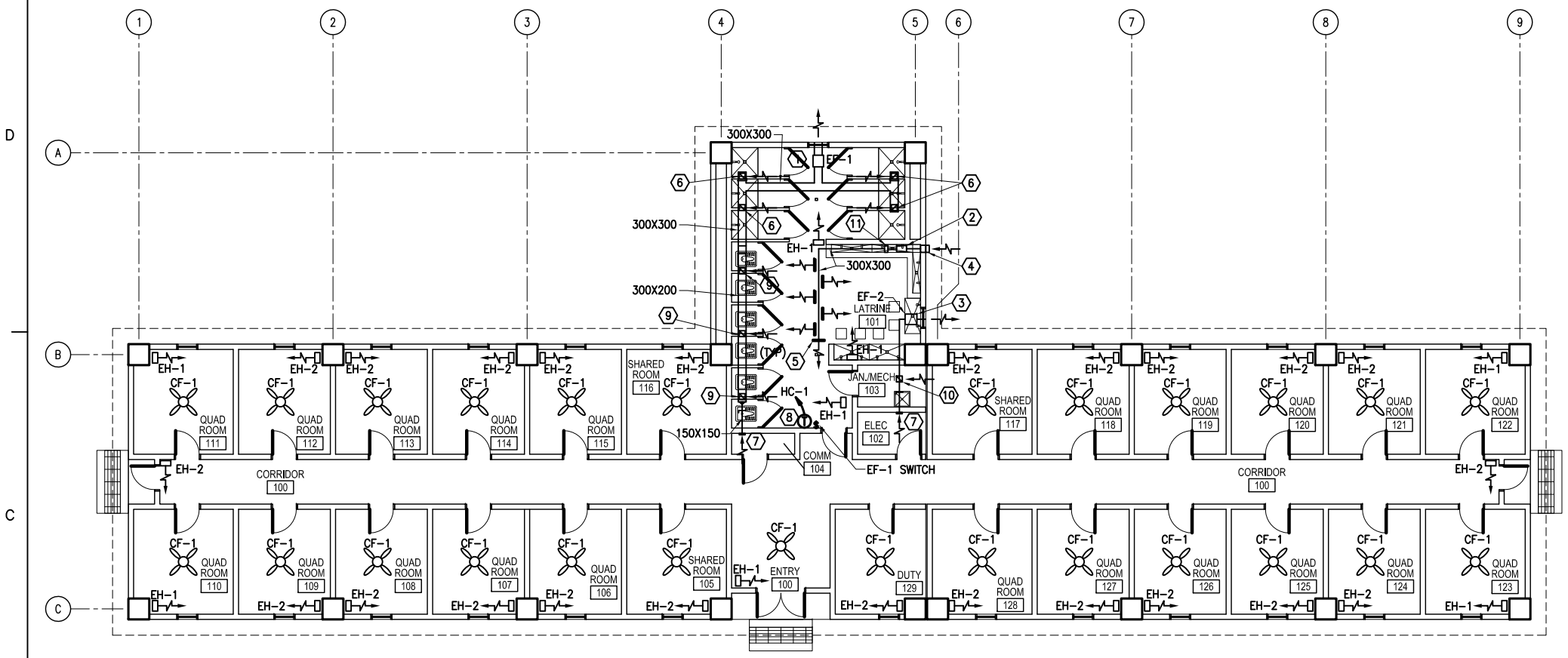

HVAC PLAN
SCALE: 1:100

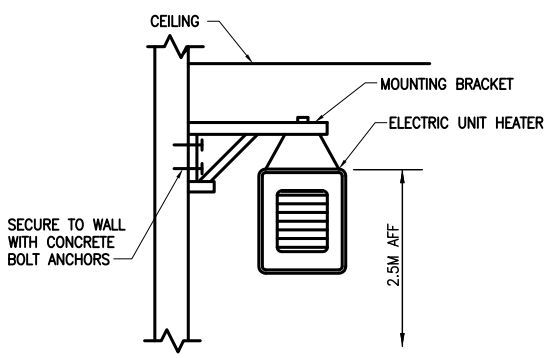

ELECTRIC UNIT HEATER MOUNTING DETAIL (1 / M-101)
SCALE: NONE

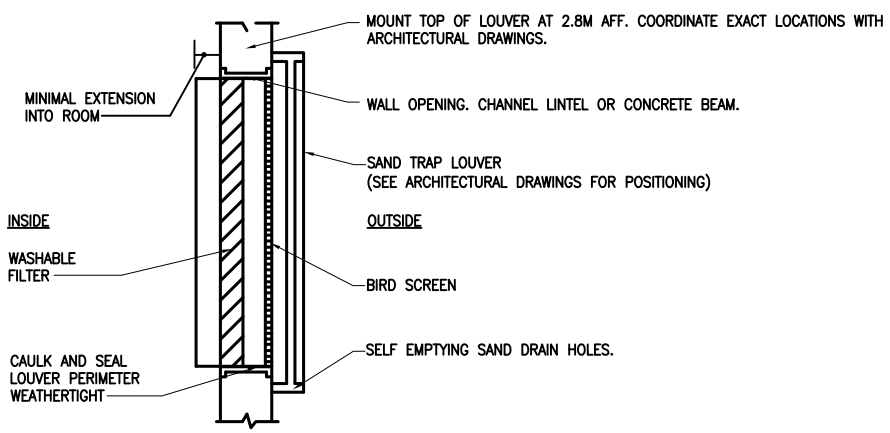

FILTERED SAND TRAP LOUVER DETAIL (2 / M-101)
SCALE: NONE

GENERAL NOTES:

1. DO NOT SCALE DRAWINGS – ALL DIMENSIONS AND CONDITIONS SHALL BE CHECKED AND VERIFIED BY THE CONTRACTOR AT THE SITE.
2. ALL WORK PERFORMED ON THIS BUILDING SHALL BE IN COMPLIANCE WITH ALL PERTINENT CODES, RULES, ORDINANCES AND REGULATIONS OF THE GOVERNING AUTHORITIES.
3. ALL WORK PERFORMED UNDER AND IN CONNECTION WITH THESE DRAWINGS AND SPECIFICATIONS SHALL BE IN STRICT COMPLIANCE WITH THE LATEST SAFETY AND HEALTH STANDARDS.
4. UNIT HEATERS SHALL BE CONTROLLED BY UNIT MOUNTED THERMOSTATS.
5. DESIGN CONDITIONS:
   OUTDOORS:
   SUMMER: 35°C (95°F) DRY BULB AND 20.6°C (69°F) WET BULB
   WINTER: –12.8°C (9°F)
   INDOORS:
   SUMMER: 24°C (75°F) AND 50% RH
   WINTER: 20°C (68°F)

SYMBOLS:

(X) KEY NOTE
(0.050) AIR VOLUME IN CUBIC METERS PER SECOND (CMS)
UC DOOR UNDERCUT
TG 200x400 (8x16) TRANSFER GRILLE
$ SINGLE POLE SWITCH – 20A RATED
$³ 3 WAY SWITCH – 20A RATED

ABBREVIATIONS:

AFF	ABOVE FINISH FLOOR	EH	ELECTRIC UNIT HEATER
CF	CEILING FANS	EF	EXHAUST FAN
CMS	CUBIC METERS PER SECOND	SF	SUPPLY FAN
EC	ELECTRICAL CONTRACTOR	HC	ELECTRICAL HEATING COIL
STATS	THERMOSTATS	MAU	MAKE UP AIR UNIT

KEY NOTE:

1. INLINE EXHAUST FAN DUCTED TO WALL CAP WITH LOW LEAKAGE GRAVITY BACK-DRAFT DAMPER. SECURE FAN TO STRUCTURE ABOVE AND INTERLOCK WITH SF-1.
2. SUPPLY FAN, SF-1, SECURED TO STRUCTURE ABOVE. FAN SHALL BE SET TO ENERGIZE WITH EXHAUST FAN EF-1.
3. INLINE EXHAUST FAN DUCTED TO WALL CAP WITH LOW LEAKAGE GRAVITY BACK DRAFT DAMPER. SECURE FAN TO STRUCTURE ABOVE.
4. 600X600 (24X24) INTAKE LOUVER FOR MAKE UP AIR UNIT. PROVIDE WEATHER PROOF LOUVER WITH 50mm (2") WASHABLE FILTER AND SAND TRAP.
5. 200x150 (8x6) ALUMINUM DUCT MOUNTED SUPPLY GRILLE WITH ADJUSTABLE OPPOSED BLADE DAMPERS. BALANCE EACH GRILLE TO 0.060 CMS.
6. 150x150 (6x6) ALUMINUM DUCT MOUNTED EXHAUST GRILLE WITH ADJUSTABLE OPPOSED BLADE DAMPERS. BALANCE EACH GRILLE TO 0.050 CMS.
7. 150x150 (6x6) ALUMINUM WALL MOUNTED EXHAUST GRILLE WITH ADJUSTABLE OPPOSED BLADE DAMPERS. BALANCE GRILLE TO 0.025 CMS.
8. THERMOSTAT MOUNTED AS HIGH AS POSSIBLE. INTERLOCK STAT WITH CORRESPONDING EXHAUST FAN, SET FAN TO ENERGIZE ON RISE IN TEMPERATURE ABOVE 25°C (77°F).
9. 200x150 (8x6) ALUMINUM DUCT MOUNTED EXHAUST GRILLE WITH ADJUSTABLE OPPOSED BLADE DAMPERS. BALANCE EACH GRILLE TO 0.085 CMS.
10. 150x150 (6x6) ALUMINUM DUCT MOUNTED EXHAUST GRILLE WITH ADJUSTABLE OPPOSED BLADE DAMPERS. BALANCE GRILLE TO 0.025 CMS.
11. ELECTRIC HEATING COIL, HC-1, DUCT MOUNTED, SECURED TO STRUCTURE ABOVE. HEATER SHALL BE SET TO ENERGIZE WITH THERMOSTAT. HEATER SHALL ONLY OPERATE WHEN SF-1 IS OPERATING.

1 0 1 2 3 4 5 6 7 8 9
1:100

UNLESS NOTED OTHERWISE, LINEAR DIMENSIONS SHOWN ARE IN MILLIMETERS.

APPROVED:
A/E DESIGNER OF RECORD
SEAL:

US ARMY CORPS OF ENGINEERS
AFGHANISTAN ENGINEER DISTRICT

Mark	Description	Date	Appr.	Mark	Description	Date	Appr.

Rev: 0
Date: 5/19/10
Design file no.
Drawing code:
File name: AF1024B-MH101PN
Plot date: 2010/06/06
Plot scale:
Designed by:
Dwn by: Ckd by:
Reviewed by:
Submitted by:
U.S. ARMY ENGINEER DISTRICT, AFGHANISTAN
CORPS OF ENGINEERS
APO AE 96338

STANDARD DESIGN
VARIOUS PROJECTS
VARIOUS LOCATIONS, AFGHANISTAN
NCO BARRACK
AF1024B–MH101PN – LAYOUT1

SHEET REFERENCE NUMBER:
B

R:\ENGINEERING\26 STANDARD DESIGNS\A-E STANDARD DESIGNS\NCO BARRACKS\AF1024B-MH101PN.DWG

R:\ENGINEERING\26 STANDARD DESIGNS\A-E STANDARD DESIGNS\NCO BARRACKS\AF1024B-MH601SC.DWG

CEILING FAN (CF) SCHEDULE

NO.	BLADE SIZE mm	BLADE SIZE IN	ELECTRICAL DATA	SWITCH	REMARKS	NOTES
CF-1	1320	52	220/1/50	WALL	3 SPEED REVERSIBLE MOTOR	1, 2, 3

NOTES:
1) PROVIDE WITHOUT LIGHT FIXTURE.
2) BOTTOM OF FAN MOUNTING HEIGHT: 2500 MM MIN ABOVE FINISHED FLOOR
3) PROVIDE WITH REMOTE WALL-MOUNTED ON-OFF SWITCH SHOWN ON ELECTRICAL DRAWINGS

ELECTRIC HEATING COIL (HC) SCHEDULE

PLAN DESIGNATION	SERVICE	FLOW RATE (CMS)	MINIMUM COIL AREA (m^2)	MAXIMUM FACE VELOCITY (m/s)	MAXIMUM PRESSURE DROP (MM H2O)	EAT (°C)	LAT (°C)	kW	MINIMUM STAGES	ELECTRICAL (V/Hz/PHASE)	NOTES
HC-1	SF-1	0.37	0.09	3.9	5	-12.8	20.0	15.0	2	380/50/3	1, 2, 3

NOTES:
(1) COIL SHALL BE SUITABLE FOR MOUNTING IN DUCT
(2) PROVIDE OPEN TYPE COIL
(3) PROVIDE UNIT MOUNTED DISCONNECT SWITCH

ELECTRIC UNIT HEATER (EH) SCHEDULE

PLAN DESIGNATION	SUPPLY FAN FLOW RATE (CMS)	SUPPLY FAN MOTOR POWER (kW)	ELECTRICAL CAPACITY (kW)	ELECTRICAL V/Hz/PHASE	NOTES
EH-1	0.200	0.02	4.0	380/50/1	1, 2, 3
EH-2	0.200	0.02	2.6	380/50/1	1, 2, 3

NOTES:
(1) PROVIDE UNIT MOUNTED DISCONNECT SWITCH
(2) PROVIDE TAMPER RESTANT UNIT MOUNTED THERMOSTAT
(3) UNIT SHALL BE WALL HUNG AND MOUNTED AT 2.5M AFF

FAN (EF, SF) SCHEDULE

PLAN DESIGNATION	TYPE	SERVICE	FLOW RATE (CMS)	EXTERNAL STATIC PRESSURE (MM H2O)	RPM	DRIVE	BRAKE POWER (kW)	MOTOR POWER (kW)	ELECTRICAL (V/Hz/PHASE)	SOUND LEVEL (SONES)	ACCESSORIES	NOTES
EF-1	INLINE CENTRIFUGAL	LATRINE	0.467	20	1000	DIRECT	0.2	0.37	220/50/1	5.6	A, B, D, E, F, I	-
EF-2	INLINE CENTRIFUGAL	LATRINE	0.047	15	1075	DIRECT	0.1	0.119	220/50/1	6.9	A, B, D, E, F, I	-
SF-1	INLINE CENTRIFUGAL	LATRINE	0.366	15	1145	DIRECT	0.1	0.119	220/50/1	7.4	A, D, E, G, H, I	-

ACCESSORIES:
A PROVIDE UNIT MOUNTED DISCONNECT SWITCH
B PROVIDE GRAVITY BACK DRAFT DAMPER
C PROVIDE BELT GUARD
D PROVIDE HANGING VIBRATION ISOLATORS
E PROVIDE SUPPORT LEGS
F PROVIDE WALL CAP
G PROVIDE BIRD SCREEN
H PROVIDE MOTOR OPERATED DAMPERS
I PROVIDE UNIT-MOUNTED FAN SPEED CONTROLLER FOR SYSTEM BALANCING

NOTES:
1) FAN SHALL BE OPERATED BY WALL SWITCH

US ARMY CORPS OF ENGINEERS AFGHANISTAN ENGINEER DISTRICT

Appr.	Date	Description	Mark

Appr.	Date	Description	Mark

U.S. ARMY ENGINEER DISTRICT, AFGHANISTAN
CORPS OF ENGINEERS
APO AE 96338

Designed by:
Own by: Cad by:
Reviewed by:
Submitted by:

Date: 5/13/10
Design file no.
Drawing code:
File name: AF1024B-MH601SC
Plot date: 20100506
Plot scale:
Rev: 0

STANDARD DESIGN
VARIOUS PROJECTS
VARIOUS LOCATIONS, AFGHANISTAN

NCO BARRACK

AF1024B–MH601SC – LAYOUT1

SHEET REFERENCE NUMBER: **B**

APPROVED:

A/E DESIGNER OF RECORD

SEAL:

A B C D

1 2 3 4 5

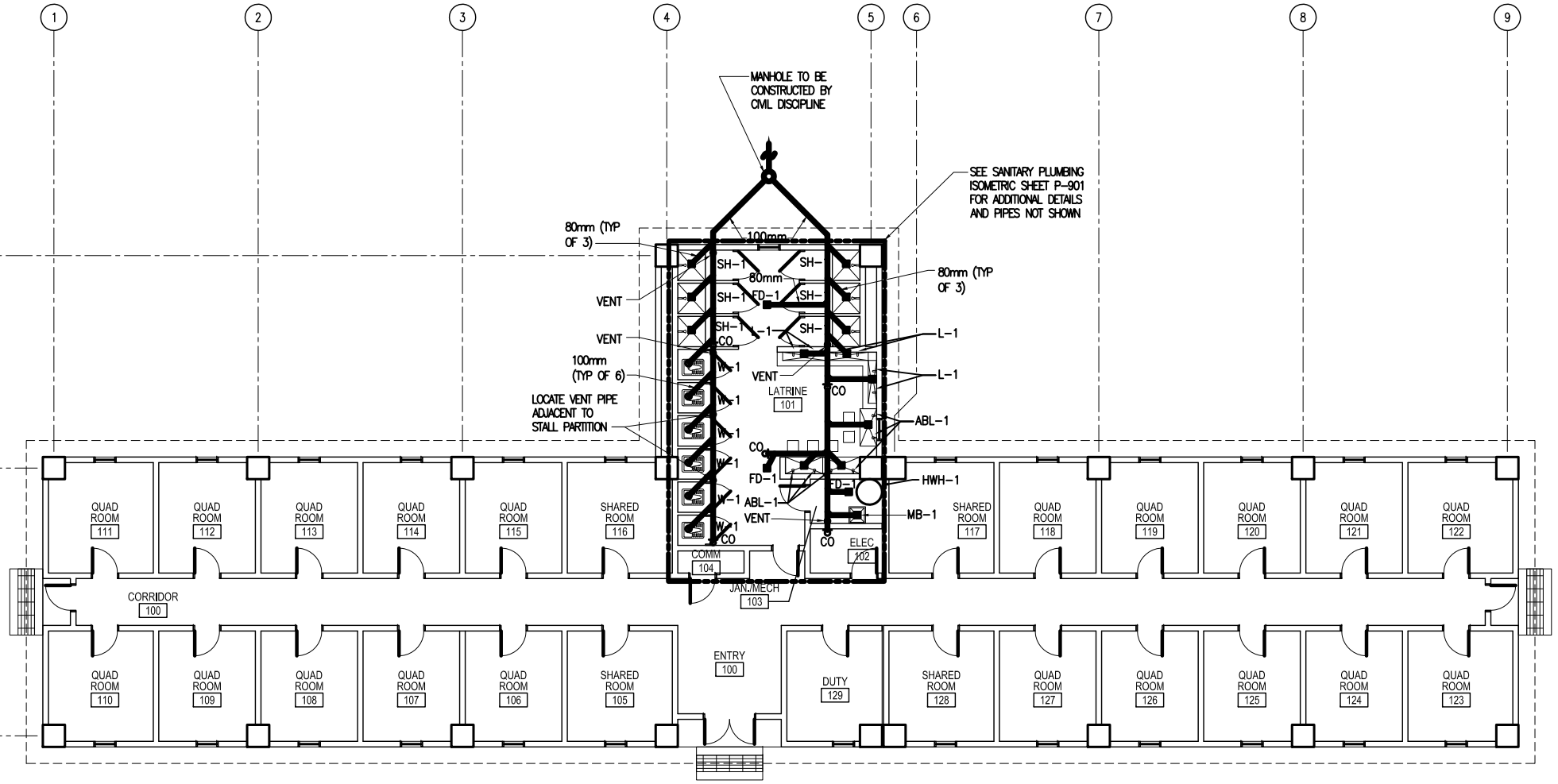

SANITARY PLUMBING PLAN
SCALE: 1:100

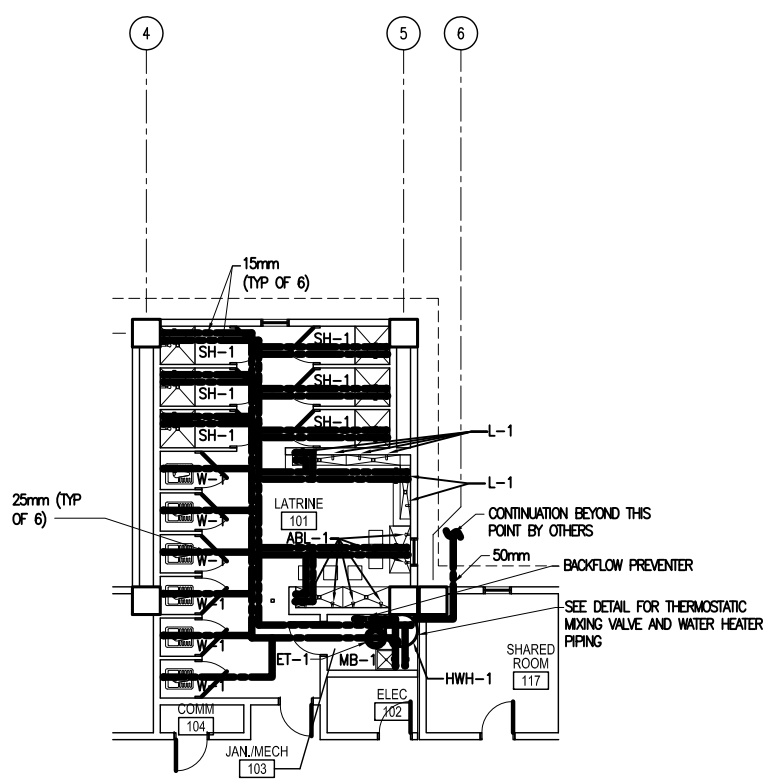

HOT AND COLD WATER PLUMBING PLAN
SCALE: 1:100

GENERAL NOTE:

1. DO NOT SCALE DRAWINGS – ALL DIMENSIONS AND CONDITIONS SHALL BE CHECKED AND VERIFIED BY THE CONTRACTOR AT THE SITE.
2. ALL WORK PERFORMED ON THIS BUILDING SHALL BE IN COMPLIANCE WITH ALL PERTINENT CODES, RULES, ORDINANCES AND REGULATIONS OF THE GOVERNING AUTHORITIES.
3. ALL WORK PERFORMED UNDER AND IN CONNECTION WITH THESE DRAWINGS AND SPECIFICATIONS SHALL BE IN STRICT COMPLIANCE WITH THE LATEST SAFETY AND HEALTH STANDARDS.
4. WATER, SANITARY, AND VENT LINES SHALL NOT BE HIDDEN IN WALLS. PROVIDE INSULATION FOR HOT AND COLD WATER PIPES.
5. PROVIDE ISOLATION VALVE FOR HOT AND COLD WATER PIPES TO EACH FIXTURE.
6. ALL VENTS THRU ROOF SHALL EXTEND MINIMUM OF 600mm ABOVE FINISHED ROOF.
7. ALL SANITARY PIPING SHALL BE BELOW FLOOR, AND ALL WATER, AND VENT PIPING SHALL BE TIGHT TO CEILING, UNLESS OTHERWISE NOTED.
8. PLUMBING CONTRACTOR SHALL COORDINATE PLUMBING WORK WITH THE WORK OF ALL OTHER TRADES. VERIFY THE LOCATIONS OF ALL UTILITIES AT THE SITE PRIOR TO THE START OF ANY PLUMBING WORK.
9. COORDINATE ALL ACCESS PANEL LOCATIONS WITH THE ARCHITECT AND GENERAL CONTRACTOR.
10. ALL SANITARY PIPING BELOW SLAB SHALL BE A MINIMUM OF 50mm, UNLESS OTHERWISE NOTED OR AS REQUIRED BY THE LOCAL AUTHORITY HAVING JURISDICTION.
11. ALL HORIZONTAL SANITARY BRANCH LINES SHALL BE SLOPED AT 8mm PER 300mm, UNLESS OTHERWISE NOTED OR AS REQUIRED BY THE LOCAL AUTHORITY HAVING JURISDICTION.
12. THE CONTRACTOR SHALL BE RESPONSIBLE FOR COORDINATION WITH ALL UTILITY AUTHORITIES FOR INSTALLATION REQUIREMENTS, REGULATIONS, FEES, PERMITS, AND APPROVALS BEFORE THE START OF CONSTRUCTION.
13. THE CONTRACTOR SHALL ROUGH-IN AND CONNECT ALL EQUIPMENT REQUIRING WATER, WASTE, AND/OR VENT WHETHER OR NOT FURNISHED UNDER THIS CONTRACT. THE CONTRACTOR SHALL ALSO FURNISH AND INSTALL ALL NECESSARY PIPE, FITTINGS, VALVES, TRAPS, ETC., REQUIRED FOR A COMPLETE INSTALLATION, LEAVING SAME READY FOR SERVICE.

PLUMBING SYMBOLS:

- SANITARY SEWER PIPING (BELOW GROUND)
- SANITARY SEWER PIPING (ABOVE GROUND)
- VENT PIPING (V)
- COLD WATER PIPING (CW)
- HOT WATER PIPING (HW)
- BALL VALVE
- BACKFLOW PREVENTER
- OR CLEANOUT (CO.)

1 0 1 2 3 4 5 6 7 8 9
1:100

UNLESS NOTED OTHERWISE, LINEAR DIMENSIONS SHOWN ARE IN MILLIMETERS.

APPROVED:

A/E DESIGNER OF RECORD

SEAL:

US ARMY CORPS OF ENGINEERS
AFGHANISTAN ENGINEER DISTRICT

Mark	Description	Date	Appr.	Mark	Description	Date	Appr.

Designed by: Date: 5/19/10 Rev: 0
Dwn by: Ckd by: Design file no.
Reviewed by: Drawing code:
Submitted by: File name: AF1024B-MP1101PN
Plot date: 2010/06/08
Plot scale:

U.S. ARMY ENGINEER DISTRICT, AFGHANISTAN
CORPS OF ENGINEERS
APO AE 96338

STANDARD DESIGN
VARIOUS PROJECTS
VARIOUS LOCATIONS, AFGHANISTAN

NCO BARRACK

AF1024B–MP1101PN – LAYOUT1

SHEET REFERENCE NUMBER:
B

R:\ENGINEERING\26 STANDARD DESIGNS\A-E STANDARD DESIGNS\NCO BARRACKS\AF1024B-MP1101PN.DWG

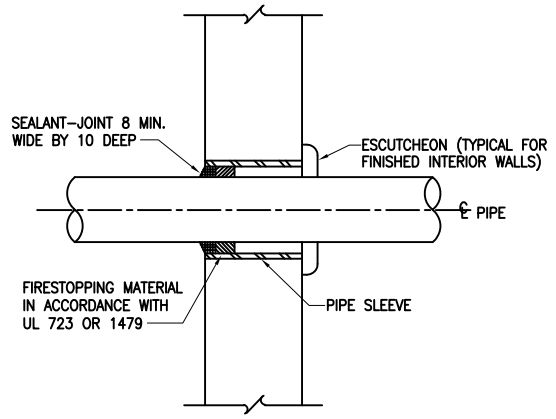

TYPICAL WALL PENETRATION DETAIL 1 / P–501
SCALE: NONE

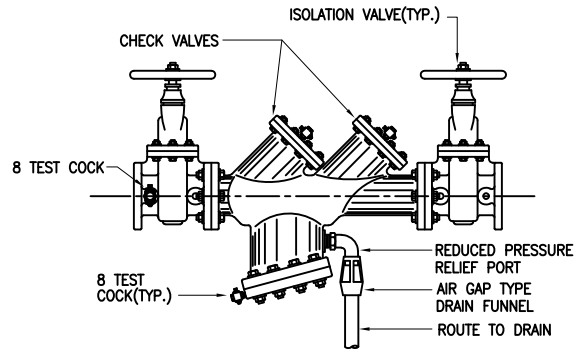

TYPICAL BACKFLOW PREVENTER DETAIL 2 / P–501
SCALE: NONE

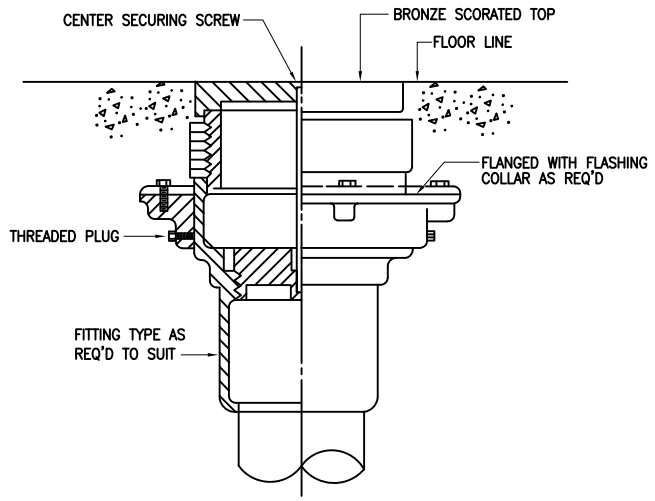

TYPICAL FLOOR CLEANOUT DETAIL 3 / P–501
SCALE: NONE

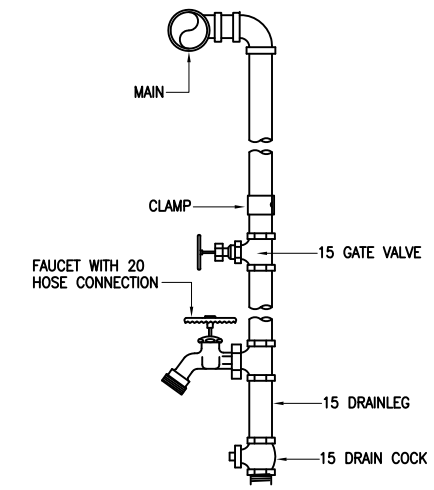

TYPICAL WATER DROP DETAIL 4 / P–501
SCALE: NONE

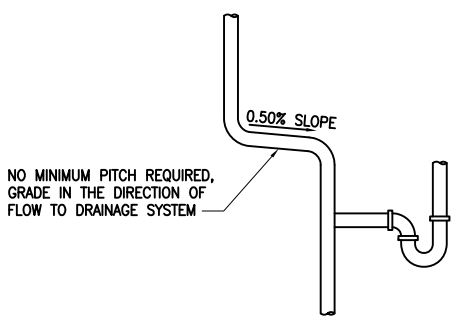

TYPICAL VENT GRADE DETAILS 5 / P–501
SCALE: NONE

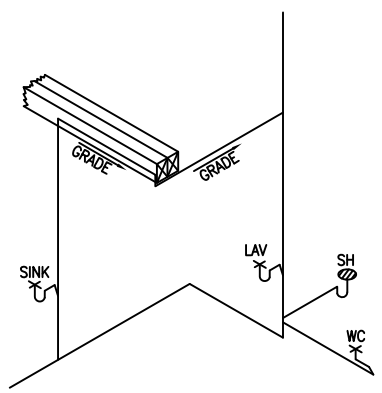

TYPICAL VENT GRADE DETAILS 6 / P–501
SCALE: NONE

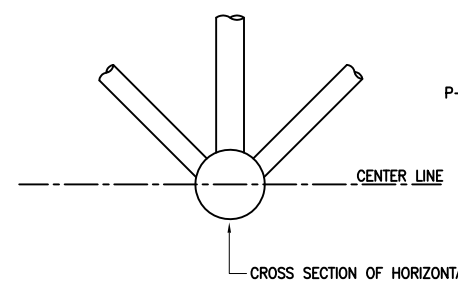

ACCEPTABLE VENT CONNECTIONS TO HORIZONTAL DRAIN - DETAIL 7 / P–501
SCALE: NONE

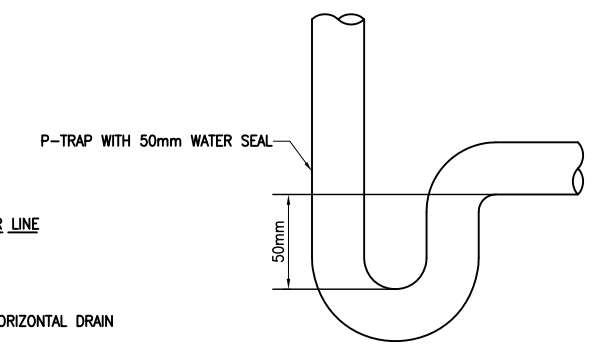

P-TRAP WITH 50mm WATER SEAL DETAIL 8 / P–501
SCALE: NONE

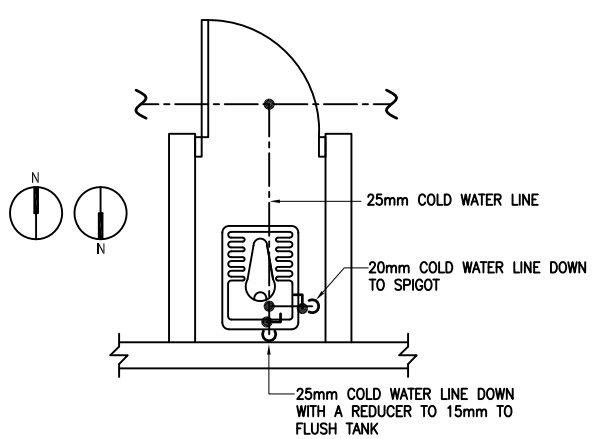

TYPICAL EASTERN STYLE WATER CLOSET WITH SPIGOT WATER PIPING DETAIL 9 / P–501
SCALE: NONE

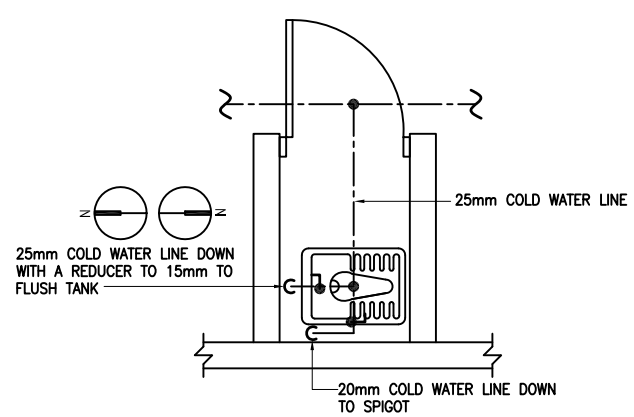

TYPICAL EASTERN STYLE WATER CLOSET WITH SPIGOT WATER PIPING DETAIL 10 / P–501
SCALE: NONE

US ARMY CORPS OF ENGINEERS
AFGHANISTAN ENGINEER DISTRICT

Mark	Description	Date	Appr.	Mark	Description	Date	Appr.

Designed by: Date: 5/19/10 Rev: 0
Dwn by: Ckd by: Design file no.
Reviewed by: Drawing code:
Submitted by: File name: AF1024B-MP501DT Plot date: 2010/06/08 Plot scale:

U.S. ARMY ENGINEER DISTRICT, AFGHANISTAN
CORPS OF ENGINEERS
APO AE 96338

STANDARD DESIGN
VARIOUS PROJECTS
VARIOUS LOCATIONS, AFGHANISTAN

NCO BARRACK

AF1024B–MP501DT – LAYOUT1
SHEET 1

APPROVED:

A/E DESIGNER OF RECORD

SEAL:

SHEET REFERENCE NUMBER:
B

R:\ENGINEERING\26 STANDARD DESIGNS\A-E STANDARD DESIGNS\NCO BARRACKS\AF1024B-MP501DT.DWG

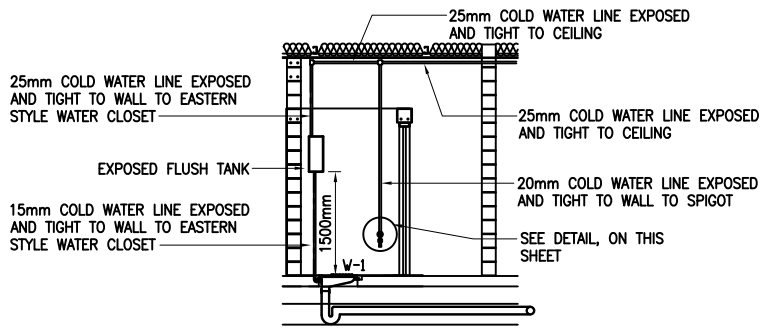

TYPICAL EASTERN STYLE WATER CLOSET SANITARY AND WATER INSTALLATION SCHEMATIC (1 / P-502)
SCALE: NONE

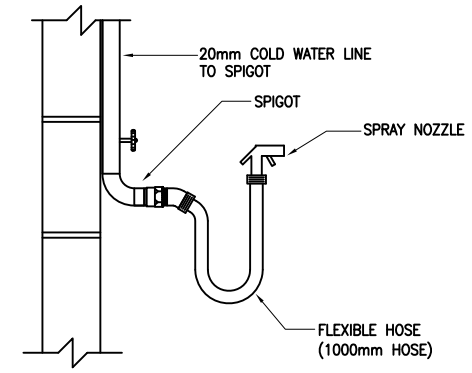

TYPICAL DETAIL - SPIGOT, FLEXIBLE HOSE, AND SPRAY NOZZLE (2 / P-502)
SCALE: NONE

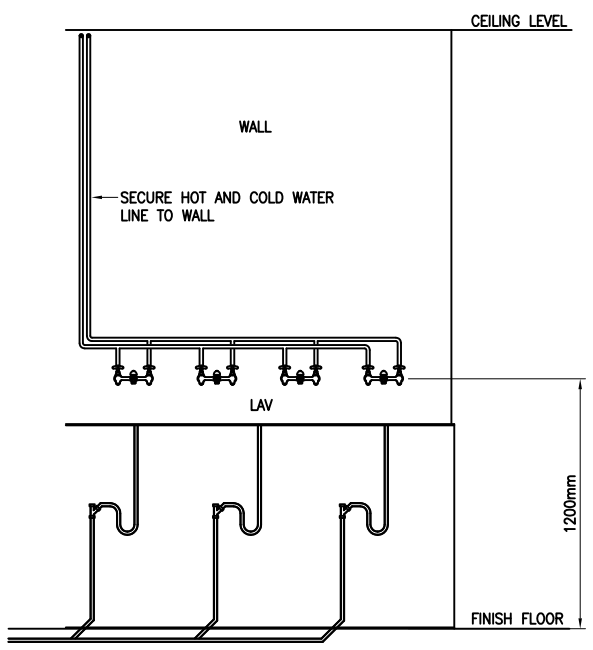

LAVATORY ELEVATION PLAN - PLUMBING (3 / P-502)
SCALE: NONE

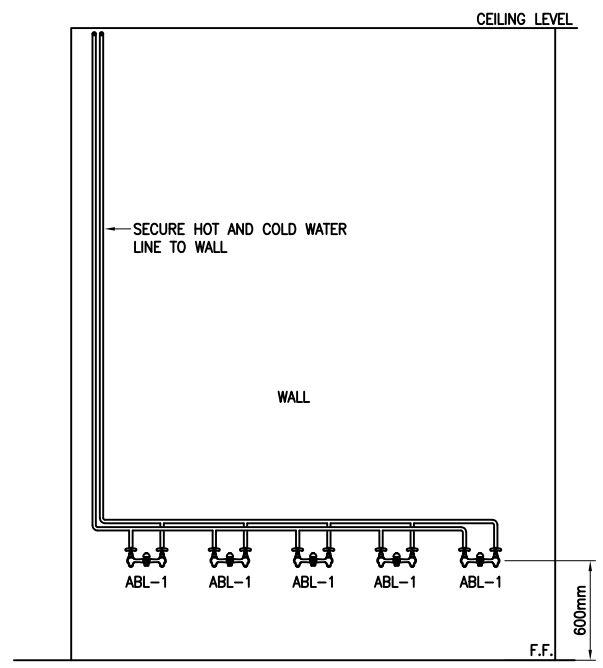

TYPICAL ABLUTION ELEVATION PLUMBING PLAN - WATER INSTALLATION SCHEMATIC (4 / P-502)
SCALE: NONE

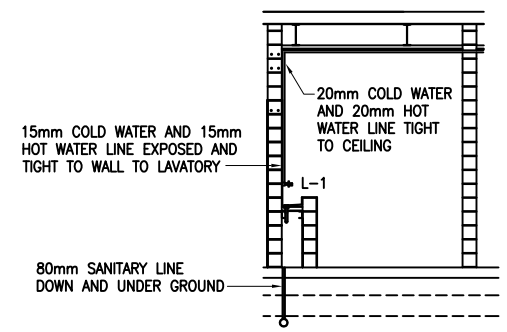

TYPICAL LAVATORY SANITARY AND WATER INSTALLATION SCHEMATIC (5 / P-502)
SCALE: NONE

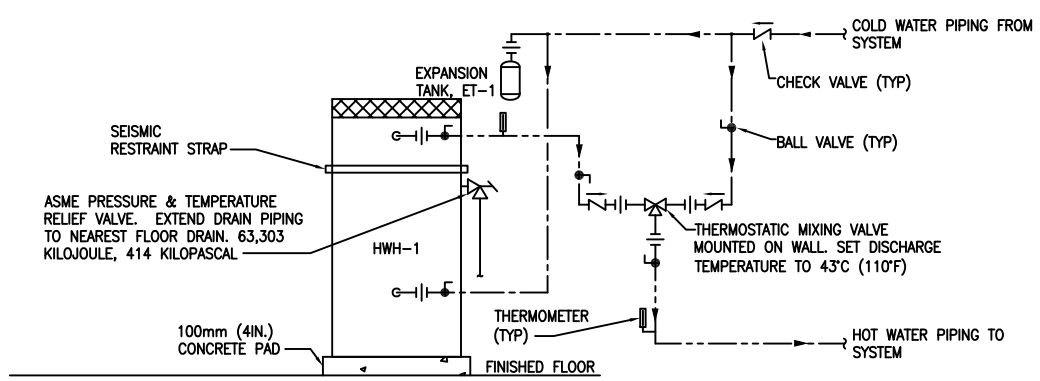

ELECTRIC WATER HEATER PIPING SCHEMATIC (6 / P-502)
SCALE: NONE

US ARMY CORPS OF ENGINEERS
AFGHANISTAN ENGINEER DISTRICT

Mark	Description	Date	Appr.	Mark	Description	Date	Appr.

U.S. ARMY ENGINEER DISTRICT, AFGHANISTAN
CORPS OF ENGINEERS
APO AE 96338

Designed by: | Date: 5/19/10 | Rev: 0
Dwn by: | Ckd by: | Design file no.
Reviewed by: | Drawing code:
Submitted by: | File name: AF1024B-MP502DT
Plot date: 2010/06/08
Plot scale:

STANDARD DESIGN
VARIOUS PROJECTS
VARIOUS LOCATIONS, AFGHANISTAN

NCO BARRACK

AF1024B-MP502DT - LAYOUT1
SHEET 2

APPROVED:

A/E DESIGNER OF RECORD

SEAL:

SHEET REFERENCE NUMBER:
B

R:\ENGINEERING\26 STANDARD DESIGNS\A-E STANDARD DESIGNS\NCO BARRACKS\AF1024B-MP502DT.DWG

PLUMBING FIXTURE SCHEDULE

PLAN DESIGNATION	FIXTURE NAME	SANITARY CONNECTION SIZE (MM)	VENT CONNECTION SIZE (MM)	COLD WATER CONNECTION SIZE (MM)	HOT WATER CONNECTION SIZE (MM)	NOTES
W-1	EASTERN STYLE WATER CLOSET WITH FLUSH TANK	100	50	15	—	(1)
L-1	TROUGH TYPE LAVATORY	32	32	15	15	(1) (2)
ABL-1	ABLUTION	—	—	15	15	—
SH-1	SHOWER	80	—	15	15	(3)
FD-1	FLOOR DRAIN	80	40	—	—	—
MB-1	MOP BASIN	80	50	20	20	(1)

NOTES:
(1) LOW FLOW EFFICIENT TYPE
(2) FABRICATEED IN FIELD
(3) DRAIN AND SHOWER CONTROLS

EXPANSION TANK (ET) SCHEDULE

PLAN DESIGNATION	SERVICE	TYPE	TANK VOLUME (L)	ACCEPTANCE VOLUME (L)	TANK RATED PRESSURE (kPa)	MAX SYSTEM PRESSURE (kPa)	MIN SYSTEM PRESSURE (kPa)	SET PRESSURE (kPa)	NOTES
ET-1	HWH-1	BLADDER	55	35	1,034	552	0	0	

NOTES:
1) ROUTE DRAINS TO NEAREST FLOOR DRAIN

ELECTRIC WATER HEATER (HWH) SCHEDULE

PLAN DESIGNATION	LOCATION	STORAGE CAPACITY (L)	UPPER ELEMENT (kW)	LOWER ELEMENT (kW)	ELECTRICAL (V/Hz/PHASE)	RECOVERY 56°C RISE (L/hr)	QTY	NOTES
HWH-1	MECH 108	250	-	15	380/50/3	250	1	1, 2

NOTES:
(1) PROVIDE TWO (2) FULL SIZE RELIEF VALVES (RV), SECOND RV SHALL BE INSTALLED IN DHW LINE BETWEEN HWH AND ISOLATION VALVE
(2) ROUTE DRAINS TO NEAREST FLOOR DRAIN

APPROVED:

A/E DESIGNER OF RECORD

SEAL:

US ARMY CORPS OF ENGINEERS
AFGHANISTAN ENGINEER DISTRICT

Mark	Description	Date	Appr.	Mark	Description	Date	Appr.

Designed by: Dwn by: Ckd by: Reviewed by: Submitted by:
Date: 5/19/10 Rev: 0
Design file no.
Drawing code:
File name: AF1024B-MP601SC
Plot date: 2010/06/08
Plot scale:

U.S. ARMY ENGINEER DISTRICT, AFGHANISTAN
CORPS OF ENGINEERS
APO AE 96338

STANDARD DESIGN
VARIOUS PROJECTS
VARIOUS LOCATIONS, AFGHANISTAN

NCO BARRACK

AF1024B–MP601SC – LAYOUT1

SHEET REFERENCE NUMBER:
B

R:\ENGINEERING\26 STANDARD DESIGNS\A-E STANDARD DESIGNS\NCO BARRACKS\AF1024B-MP601SC.DWG

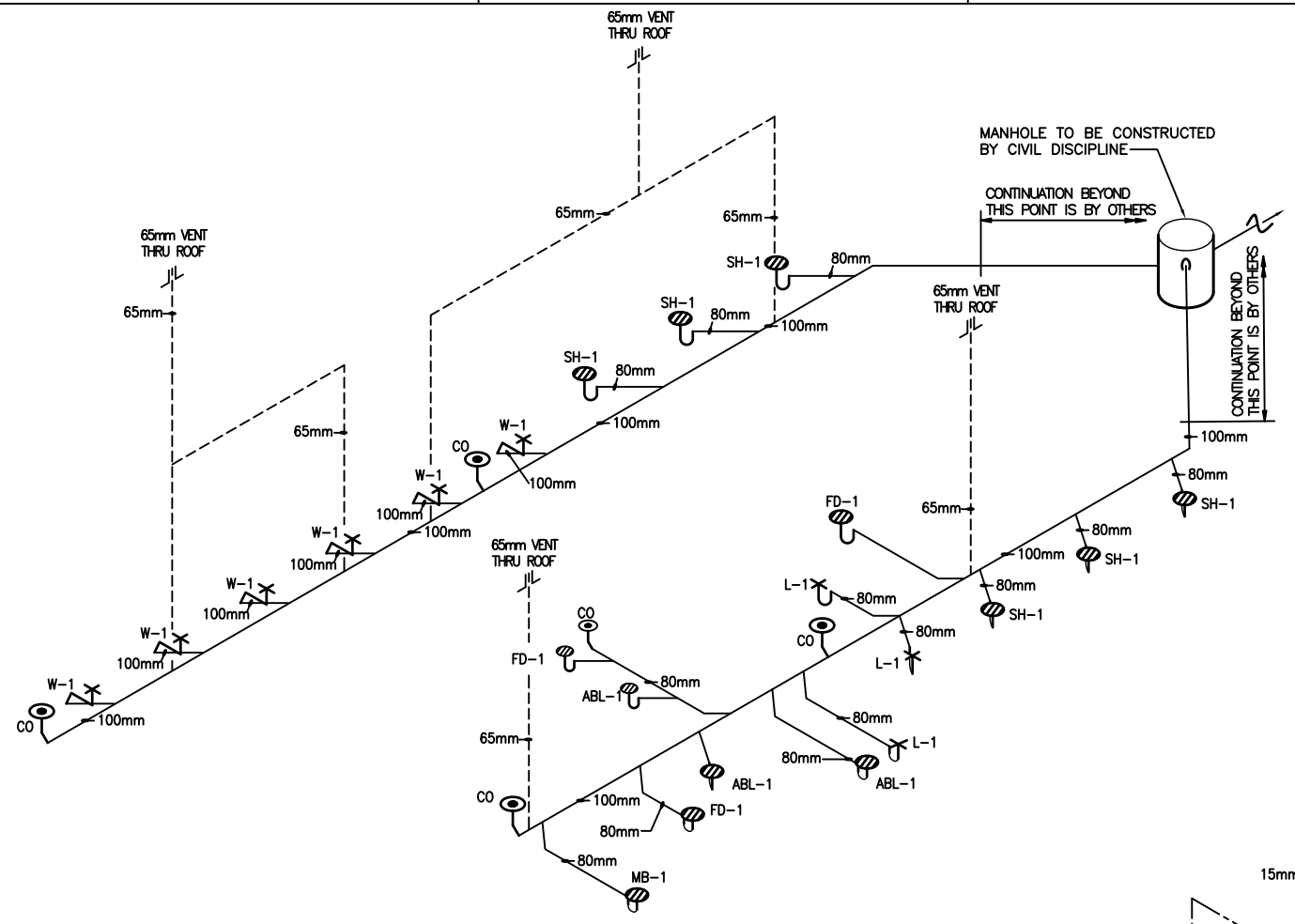

SANITARY PLUMBING ISOMETRIC
SCALE: NONE

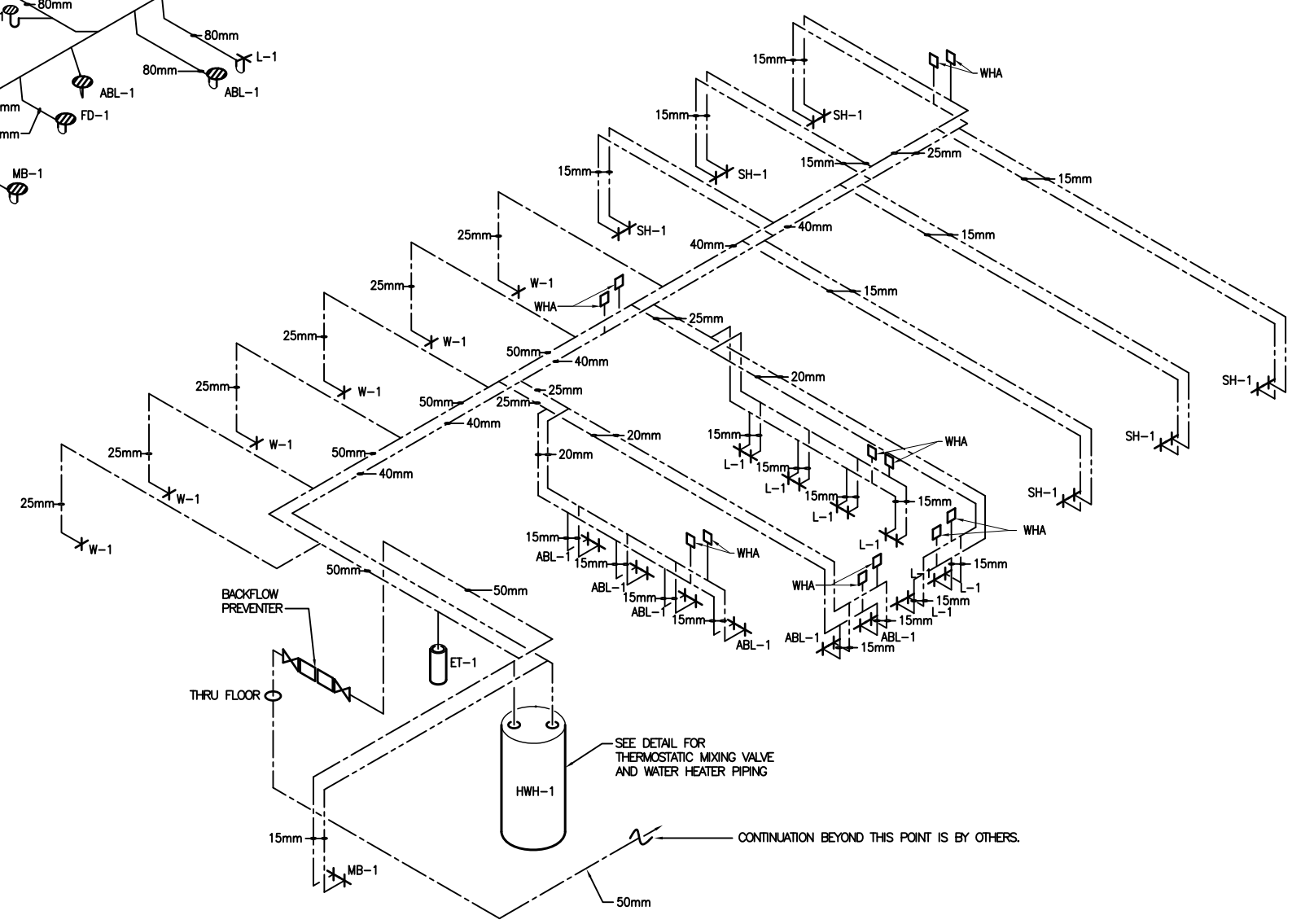

HOT AND COLD WATER ISOMETRIC
SCALE: NONE

PLUMBING SYMBOLS:

- SANITARY SEWER PIPING
- VENT PIPING (V)
- COLD WATER PIPING (CW)
- HOT WATER PIPING (HW)

US ARMY CORPS OF ENGINEERS
AFGHANISTAN ENGINEER DISTRICT

Mark	Description	Date	Appr.	Mark	Description	Date	Appr.

Designed by: | Date: 5/19/10 | Rev: 0
Dwn by: | Ckd by: | Design file no.
Reviewed by: | Drawing code:
Submitted by: | File name: AF1024B-MP901IS | Plot date: 2010/06/08 | Plot scale:

U.S. ARMY ENGINEER DISTRICT, AFGHANISTAN
CORPS OF ENGINEERS
APO AE 96338

STANDARD DESIGN
VARIOUS PROJECTS
VARIOUS LOCATIONS, AFGHANISTAN

NCO BARRACK

AF1024B-MP901IS – LAYOUT1

APPROVED:

A/E DESIGNER OF RECORD

SEAL:

SHEET REFERENCE NUMBER:
B

R:\ENGINEERING\26 STANDARD DESIGNS\A-E STANDARD DESIGNS\NCO BARRACKS\AF1024B-MP901IS.DWG

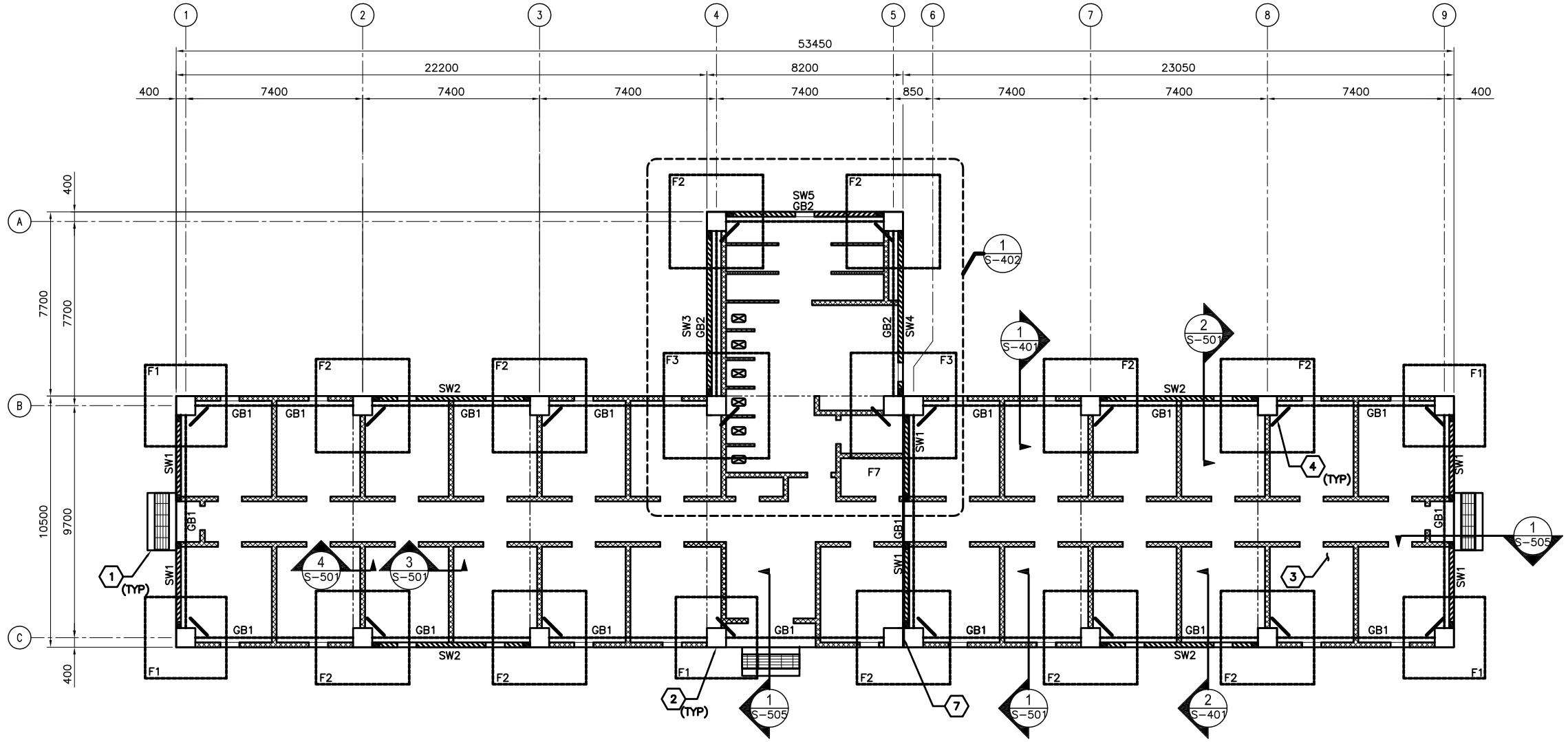

FOUNDATION AND SLAB PLAN

SCALE: 1:100

FOUNDATION/SLAB PLAN NOTES:

1. REFER TO SHEET S-001 FOR STRUCTURAL NOTES AND DESIGN CRITERIA.
2. FINISH FIRST FLOOR ELEVATION SHALL BE (DATUM 0.00) ALL PLUS OR MINUS DIMENSIONS INDICATED ON PLAN OR REFERRED TO IN NOTES RELATE TO FINISH FIRST FLOOR ELEVATION.
3. SLAB-ON-GRADE IS 150 WITH #16 @ 300 OC EW LOCATED 40 FROM T/SLAB OUN. WHERE NOTED, 300 SLAB-ON-GRADE SHALL BE REINFORCED W/ #16 @ 300 OC EW T&B
4. TOP OF EXTERIOR FOOTINGS SHALL BE -950 UNLESS OTHERWISE INDICATED.
5. COLUMN FOOTINGS INDICATED BY F# ON PLAN. REFER TO COLUMN FOOTING SCHEDULE ON SHEET S-601.
6. REFER TO COLUMN SCHEDULE ON SHEET S-601.
7. GRADE BEAM INDICATED BY GB# ON PLAN, REFER TO BEAM SCHEDULE ON SHEET S-601.
8. SHEARWALL INDICATED BY SW# ON PLAN, REFER TO SHEARWALL SCHEDULE ON SHEET S-601.
9. SEE TYP EXTERIOR & INTERIOR CMU WALL REINF DETAILS ON SHEET S-701.
10. SEE MECHANICAL AND ELECTRICAL SHEETS FOR CONCRETE PAD LOCATIONS, SIZES, AND THICKNESS NOT SHOWN. SEE SHEET S-701 FOR DETAILS.
11. THICKENED SLAB UNDER CMU PERIMETER/PARTITION WALLS NOT SHOWN FOR CLARITY.

FOUNDATION/SLAB PLAN KEY NOTES: (X)

1. CONC PAD (ENTRANCE) – SEE ARCH DWGS FOR INFORMATION
2. REINF CONC COLUMN
3. REINF CONC SLAB-ON-GRADE
4. (2)-#13 @ RE-ENTRANT CORNERS – SEE S-701 FOR INFORMATION
5. SLAB OPENING – COORD W/ ARCH AND PLUMBING DWGS
6. NOT USED
7. 50 ISOLATION JOINT BETWEEN STRUCTURES LOCATED ABOVE FIRST FLOOR SLAB-ON-GRADE

FOUNDATION/SLAB PLAN LEGEND:

- REINF CONC SHEAR WALL
- REINF CMU WALL
- CONTROL JOINT
- INDICATES DROP SLAB 65 BELOW FINISH FLOOR
- INDICATES DROP SLAB 200 BELOW FINISH FLOOR
- SLAB OPENING

1 0 1 2 3 4 5 6 7 8 9
1:100

UNLESS NOTED OTHERWISE, LINEAR DIMENSIONS SHOWN ARE IN MILLIMETERS.

APPROVED:

A/E DESIGNER OF RECORD

SEAL:

US ARMY CORPS OF ENGINEERS
AFGHANISTAN ENGINEER DISTRICT

Mark	Description	Date	Appr.	Mark	Description	Date	Appr.

Designed by:
Dwn by: Ckd by:
Reviewed by:
Submitted by:
Date: 5/19/10
Rev: 0
Design file no.
Drawing code:
File name: AF1024B-SB101PN
Plot date: 2010/06/08
Plot scale:

U.S. ARMY ENGINEER DISTRICT, AFGHANISTAN
CORPS OF ENGINEERS
APO AE 96338

STANDARD DESIGN
VARIOUS PROJECTS
VARIOUS LOCATIONS, AFGHANISTAN

NCO BARRACK

AF1024B-SB101PN – LAYOUT1

SHEET REFERENCE NUMBER:
B

R:\ENGINEERING\26 STANDARD DESIGNS\A-E STANDARD DESIGNS\NCO BARRACKS\AF1024B-SB101PN.DWG

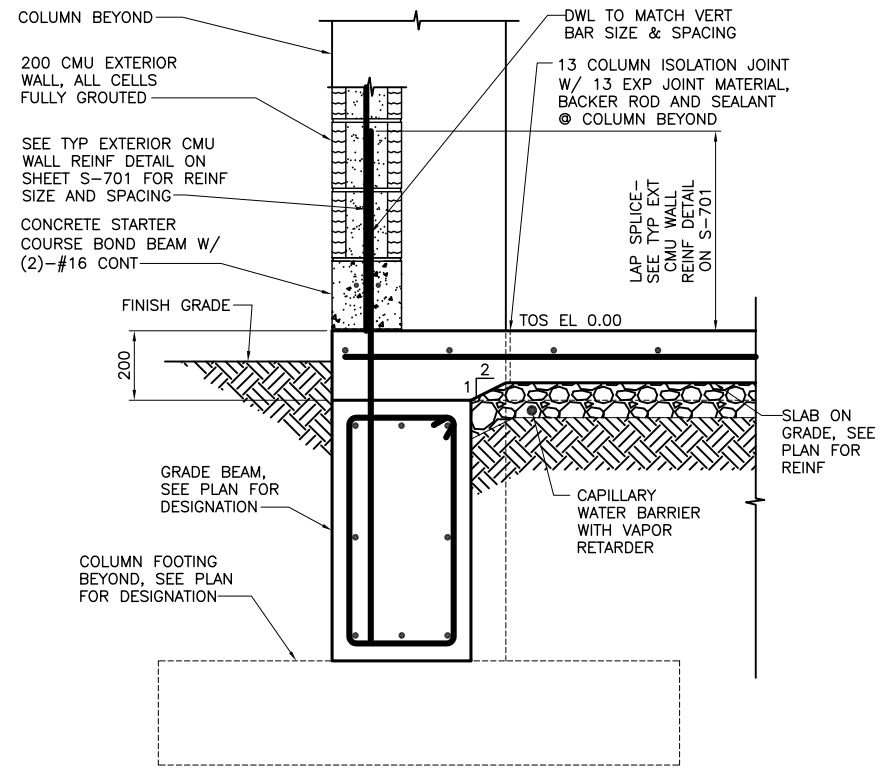

NOTE:
1. SECTION IS SIMILAR FOR INTERIOR CMU PARTITIONS OVER GRADE BEAMS SHOWING THICKENED 200 CONC SLAB AREA.

SECTION 1 / S-101
SCALE: 1:10

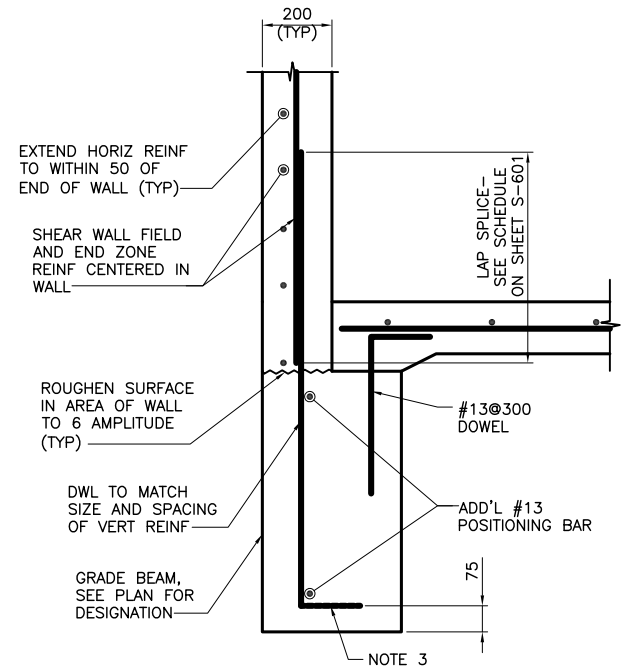

NOTE:
1. SECTION DEPICTS SHEAR WALL TERMINATION ONLY. GRADE BEAM REINFORCING NOT SHOWN FOR CLARITY.
2. SEE SHEET S-601 AND SHEET S-702 FOR SCHEDULED FIELD AND END ZONE REINF.
3. PROVIDE STANDARD HOOK WHERE REQUIRED TO DEVELOP DOWEL.

SECTION 2 / S-101
SCALE: 1:10

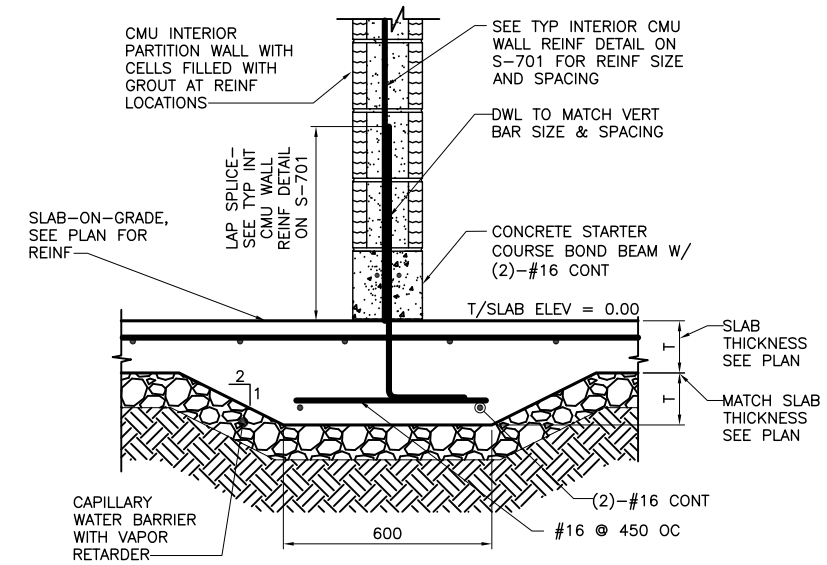

SECTION 3 / S-101
SCALE: 1:10

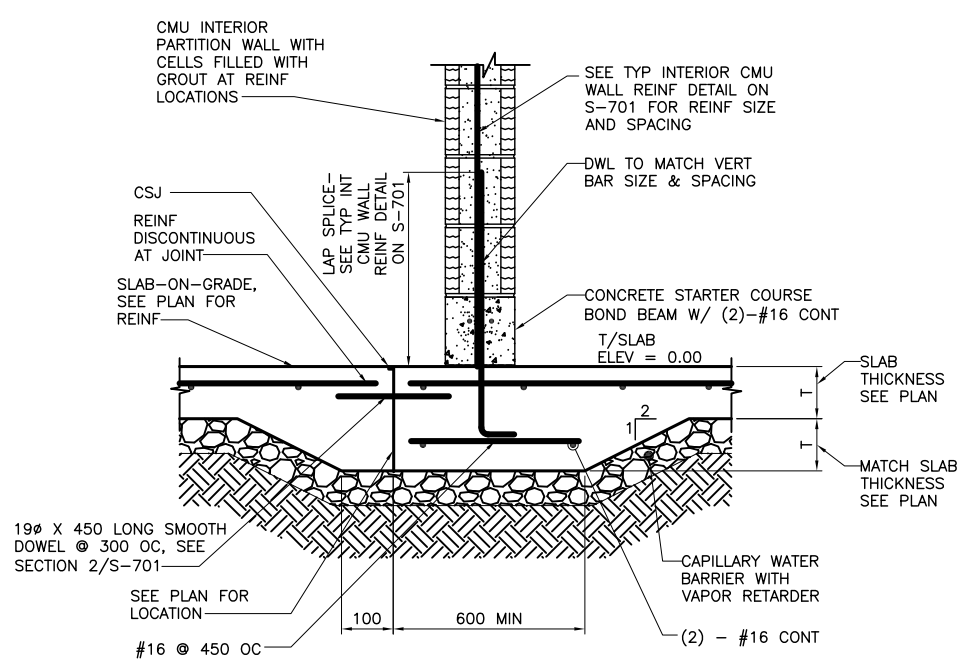

NOTE:
1. DETAIL IS APPLICABLE AT CONTROL JOINTS RUNNING PARALLEL TO CMU WALLS AND WITHIN 300 OF FACE OF WALL.

SECTION 4 / S-101
SCALE: 1:10

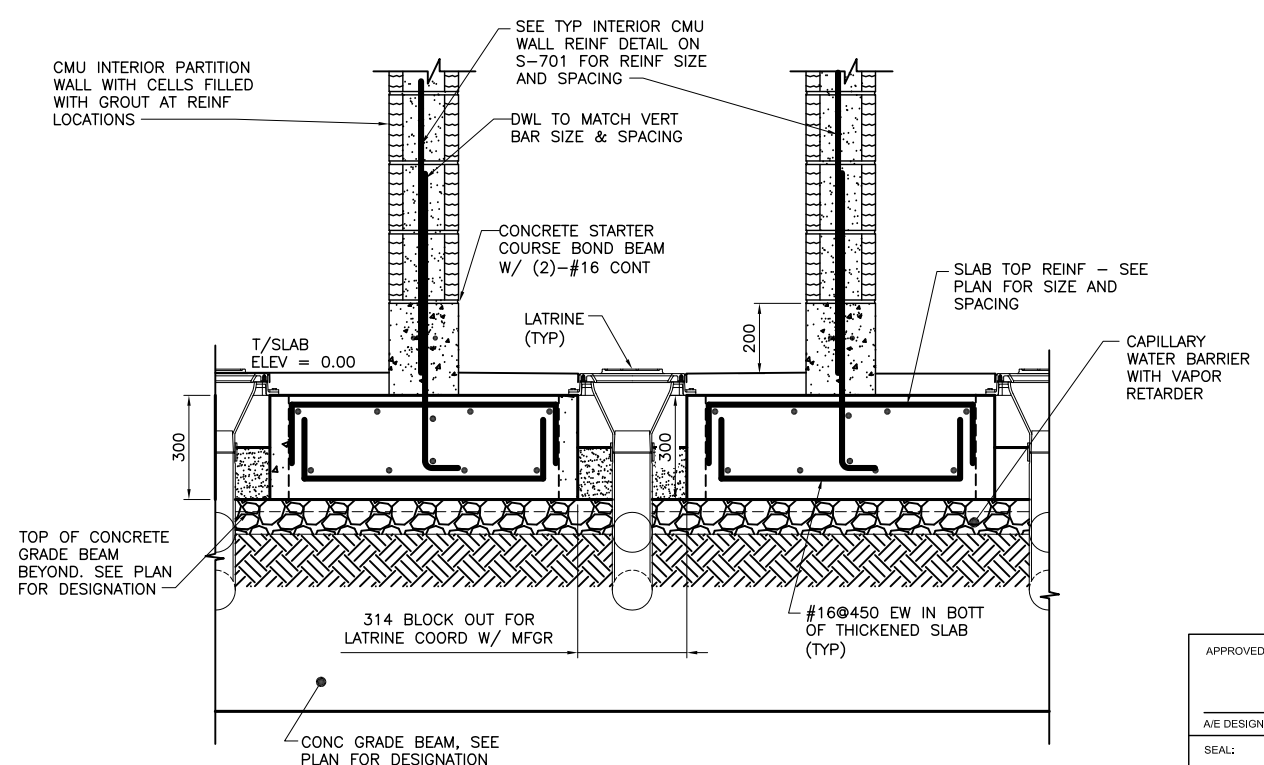

SECTION 5 / S-402
SCALE: 1:10

0 .50 1.00
1:10

UNLESS NOTED OTHERWISE, LINEAR DIMENSIONS SHOWN ARE IN MILLIMETERS.

APPROVED:

A/E DESIGNER OF RECORD

SEAL:

US ARMY CORPS OF ENGINEERS
AFGHANISTAN ENGINEER DISTRICT

Mark	Description	Date	Appr.	Mark	Description	Date	Appr.

Designed by: Dwn by: Ckd by: Reviewed by: Submitted by:
Date: 5/19/10 Rev: 0
Design file no.
Drawing code:
File name: AF1024B-SB501SE
Plot date: 2010/06/06
Plot scale:

U.S. ARMY ENGINEER DISTRICT, AFGHANISTAN
CORPS OF ENGINEERS
APO AE 96338

STANDARD DESIGN
VARIOUS PROJECTS
VARIOUS LOCATIONS, AFGHANISTAN
NCO BARRACK
AF1024B-SB501SE - LAYOUT1

SHEET REFERENCE NUMBER:
B

R:\ENGINEERING\26 STANDARD DESIGNS\A-E STANDARD DESIGNS\NCO BARRACKS\AF1024B-SB501SE.DWG

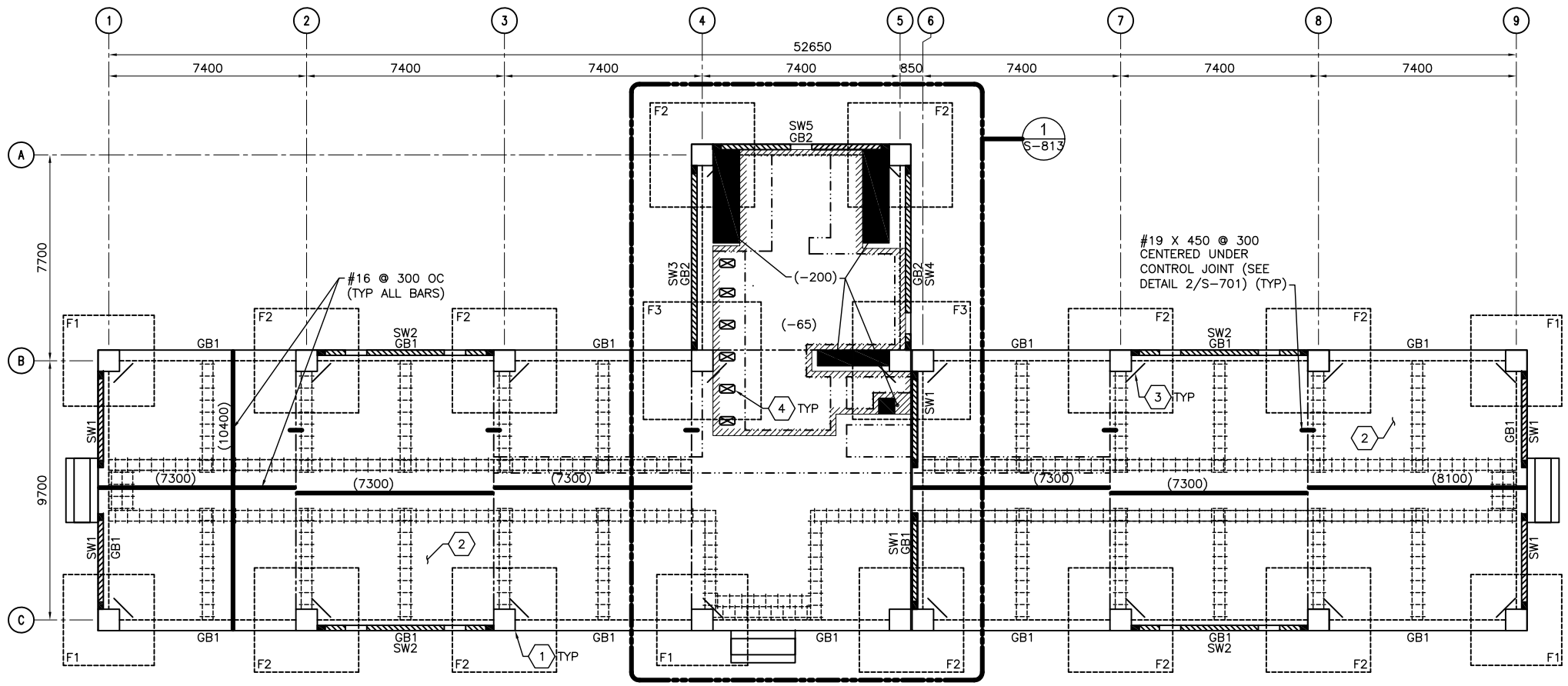

FOUNDATION/SLAB PLAN

SCALE: 1:100

FOUNDATION/SLAB PLAN NOTES:

1. REBAR DETAIL AND PLACEMENT DRAWINGS (800 SERIES) ARE PROVIDED FOR INFORMATION ONLY. REBAR PLACEMENT AND DETAIL DRAWINGS SHALL BE CHECKED AND VALIDATED BY CONSTRUCTION CONTRACTOR.
2. SLAB-ON-GRADE REINFORCING ARE LOCATED 40mm FROM T/SLAB, 50mm FROM EDGES AND CONTROL JOINT. LENGTH NOTED AS THUS (6600)
3. COLUMN FOOTINGS INDICATED BY F# ON PLAN, REFER TO DETAILS ON SHEET S-803.
4. COLUMNS, REFER TO DETAILS ON SHEET S-803.
5. GRADE BEAM INDICATED BY GB# ON PLAN, REFER TO BEAM ELEVATIONS ON SHEET S-804, S-805, S-806 AND S-807.
6. SHEAR WALL INDICATED BY SW# ON PLAN, REFER TO SHEAR WALL DETAILS ON SHEET S-808, S-809, S-810, S-811 AND S-812.
7. PROVIDE #16 DOWELS EMBEDDED IN THICKENED FLOOR SLAB TO MATCH MASONRY WALL VERTICAL REINFORCING. DOWELS SHALL HAVE 800 LAP LENGTH AND 250 HOOKS ON BOTTOM. SEE SHEET S-501 FOR DETAILS.

FOUNDATION/SLAB PLAN KEY NOTES: (X)

1. REINFORCING CONCRETE COLUMN (SEE SHEET S-803)
2. REINFORCING CONCRETE SLAB-ON-GRADE.
3. (2) - #13 RE-ENTRANT CORNER BARS (SEE DETAIL 5/S-803)
4. SLAB OPENING - COORDINATE W/ ARCH AND PLUMB DRAWINGS.

FOUNDATION/SLAB PLAN LEGEND:

- SLAB REINFORCING TOP BARS
- REINFORCING CONCRETE SHEAR WALL
- CONTROL JOINT (SEE DETAIL 2/S-701)
- INDICATES DROP SLAB 65mm BELOW FINISH FLOOR
- INDICATES DROP SLAB 200mm BELOW FINISH FLOOR
- SLAB OPENING
- THICKENED SLAB REINFORCING BENEATH CMU WALLS:

  SHORT DIRECTION - #16 x 540 @ 450

  LONG DIRECTION - (2) #16 X (LENGTH OF CMU WALL OR DISTANCE BETWEEN CONTROL JOINTS)

  LOCATE 70 ABOVE BOTTOM OF THICKENED SLAB (SEE 3/S-501 AND 4/S-501)

1 0 1 2 3 4 5 6 7 8 9
1:100

UNLESS NOTED OTHERWISE, LINEAR DIMENSIONS SHOWN ARE IN MILLIMETERS.

US ARMY CORPS OF ENGINEERS
AFGHANISTAN ENGINEER DISTRICT

Mark	Description	Date	Appr.	Mark	Description	Date	Appr.

Designed by: Dwn by: Ckd by: Reviewed by: Submitted by:
Date: 5/19/10 Rev: 0
Design file no.
Drawing code:
File name: AF10248-SB801PN
Plot date: 2010/06/08
Plot scale:

U.S. ARMY ENGINEER DISTRICT, AFGHANISTAN
CORPS OF ENGINEERS
APO AE 96338

STANDARD DESIGN
VARIOUS PROJECTS
VARIOUS LOCATIONS, AFGHANISTAN

NCO BARRACK

AF10248-SB801PN - LAYOUT1

SHEET REFERENCE NUMBER:
B

R:\ENGINEERING\26 STANDARD DESIGNS\A-E STANDARD DESIGNS\NCO BARRACKS\AF10248-SB801PN.DWG

POWER

- DISTRIBUTION PANELBOARD
- NEW PANELBOARD – SURFACE
- NEW PANELBOARD – RECESSED
- GENERATOR
- TRANSFORMER (DRAWN TO SIZE)
- JUNCTION BOX
- JUNCTION BOX – CEILING
- FUSIBLE SAFETY SWITCH
- MOTOR
- MOTOR STARTING SWITCH – 220V, 20A RATED UNLESS OTHERWISE NOTED
- ELECTRIC WATER HEATER
- CEILING FAN
- RBP REMOTE BATTERY PACK

RECEPTACLES

- DUPLEX 20A TYPE CEE 7/7 "SCHUKO STYLE" UNSWITCHED RECEPTACLE
- GF DUPLEX 20A TYPE CEE 7/7 "SCHUKO STYLE" UNSWITCHED RECEPTACLES – 10mA GROUND FAULT INTERRUPTER TYPE
- WP DUPLEX 20A TYPE CEE 7/7 "SCHUKO STYLE" UNSWITCHED TYPE WITH WEATHERPROOF COVER – 10mA GROUND FAULT INTERRUPTER TYPE
- EXP DUPLEX 20A TYPE CEE 7/7 "SCHUKO STYLE" UNSWITCHED RECEPTACLES – EXPLOSION PROOF
- * INDICATES MOUNT DEVICE ABOVE COUNTERTOP OR AT 1070mm ABOVE FINISHED FLOOR WHERE NO COUNTER IS TO BE INSTALLED.

LIGHTNING PROTECTION

- AIR TERMINAL 20mm O.D. X 450mm SOLID COPPER, NICKEL PLATED ON ADHESIVE BASE
- EQ EQUIPMENT AIR TERMINAL
- TEST WELL WITH GROUND ROD(S)
- GROUND ROD
- G GROUND PLATE
- G MAIN GROUND CONDUCTER CONCEALED WITHIN CONSTRUCTION
- G MAIN GROUND CONDUCTOR EXPOSED ON EXPOSED ON BUILDING EXTERIOR SURFACE
- G GROUND CONDUCTOR CAD WELDED TO GROUND CABLE OR EQUIPMENT
- G GROUND ROD TRIODE, SPACED 3 METERS APART.
- LEVEL TO LEVEL CABLE
- UNDERGROUND GROUND CONDUCTOR
- LIGHTING PROTECTION CONDUCTOR

LIGHTING

- LIGHTING FIXTURE – SEE FIXTURE SCHEDULE FOR MORE INFORMATION DWG E–601
- EMERGENCY LIGHTING FIXTURE – SEE FIXTURE SCHEDULE FOR MORE INFORMATION DWG E–601
- DOWNLIGHT
- LIGHTING FIXTURE ON NORMAL/EMERGENCY
- WALL MOUNTED LIGHT FIXTURE
- E EXIT SIGN – DIRECTIONAL ARROWS AS INDICATED ON DRAWINGS
- REMOTE HEAD FOR BATTERY PACK
- $ SINGLE POLE SWITCH – 20A RATED
- $3 3–WAY SWITCH – 20A RATED
- $4 4–WAY SWITCH – 20A RATED
- LC LIGHTING CONTACTOR
- POLE MOUNTED SITE LIGHTING FIXTURE– NUMBER OF FIXTURES PER POLE AS INDICATED ON DRAWINGS
- EXTERIOR DIRECTIONAL LIGHTING FIXTURE
- a SMALL CASE LETTERS REPRESENTS LAMP(S) / SWITCHES.

TELECOMMUNICATIONS

- ▼ TELEPHONE OUTLET(S) @ 45cm AFF. U.N.O. WITH 20mm RACEWAY TERMINATED TO TELEDATA TERMINAL BOARD.
- ▽ DATA OUTLET(S) @ 45cm AFF. U.N.O. WITH 20mm RACEWAY TERMINATED TO TELEDATA TERMINAL BOARD.

TELECOMMUNICATIONS (CONTINUED)

- ▼▽ COMBINATION TELEPHONE/DATA OUTLET(S) @ 45cm AFF. U.N.O. WITH 27mm RACEWAY TERMINATED TO TELEDATA TERMINAL AREA.
- W▼ WALL MTD. TELEPHONE OUTLET WITH 20mm RACEWAY TO TELEDATA TERMINAL BOARD. W = 1300 AFF
- (x)T INDICATES NUMBER OF TELEPHONE OUTLET(S) AND ASSOCIATED CABLING
- (x)D INDICATES NUMBER OF DATA OUTLET(S) AND ASSOCIATED CABLING
- (x)TF INDICATES NUMBER OF TELEPHONE OUTLETS AND ASSOCIATED CABLING WITH 1 OUTLET AND CABLE DEDICATED FOR FAX

SINGLE LINE SYMBOLS

- SWITCH
- BREAKER
- FUSE
- TRANSFORMER
- GROUND
- CONTACT (NORMALLY OPEN)
- CONTACT (NORMALLY CLOSED)
- TRANSFER SWITCH
- CURRENT TRANSFORMER
- INDICATES NEW ELECTRICAL EQUIPMENT
- C INDICATES NEW CONTROL WIRING AND CONDUIT
- EQUIPMENT OUTLINE

MISCELLANEOUS

- BRANCH CIRCUIT WIRING, SURFACE MOUNTED ON WALLS
- 2 BRANCH CIRCUIT WIRING – 6mm²
- U BRANCH CIRCUIT WIRING – UNDER FLOOR
- HOME RUN BACK TO PANEL
- CONDUIT TURNED DOWN
- CONDUIT TURNED UP
- LV LOW VOLTAGE WIRING AND CONDUIT
- ~ INDICATES CONTINUATION OF LINE

FIRE ALARM

- FACP FIRE ALARM CONTROL PANEL WITH BATTERY BACKUP
- F FIRE ALARM PULL STATION

FIRE ALARM (CONTINUED)

- F FIRE ALARM STROBE – WALL MOUNTED
- F FIRE ALARM AUDIBLE/STROBE – WALL MOUNTED
- F FIRE ALARM HORN/STROBE – WALL MOUNTED
- S SMOKE DETECTOR
- H HEAT DETECTOR CEILING MOUNTED
- D DUCT DETECTOR

DENOTATIONS & ABBREVIATIONS

AFF	ABOVE FINISHED FLOOR
C	CEILING MOUNTED
E	EMERGENCY
EC	ELECTRICAL CONTRACTOR
EPO	EMERGENCY POWER OFF
EXP	EXPLOSION PROOF
F	FIRE ALARM
FF	FLUSH FLOOR MOUNTED
FL	FLUORESCENT
FO	FIBER OPTIC
FSS	FUSED SAFETY SWITCH
GF	GROUND FAULT INTERRUPTER
GC	GENERAL CONTRACTOR
IG	ISOLATED GROUND
K	KEY
LV	LOW VOLTAGE
M	MOTOR
MC	MECHANICAL CONTRACTOR
NE	NORMAL/EMERGENCY
NFSS	NON–FUSED SAFETY SWITCH
PA	PAGING SYSTEM
PLC	PLUMBING CONTRACTOR
SL	SINGLE LINE
T	TELEPHONE

DENOTATIONS & ABBREVIATIONS (CONT.)

TP	TAMPER PROOF
UE	UNDERGROUND ELECTRIC
W	WALL MOUNTED
WP	WEATHERPROOF WITH GROUND FAULT INTERRUPTION
WT	WATER TIGHT

GENERAL PROJECT NOTES:

G1. UNLESS OTHERWISE NOTED, PROVIDE ALL EQUIPMENT SHOWN ON THE PLANS. THE ELECTRICAL CONTRACTOR SHALL COORDINATE ALL SYMBOLS SHOWN ON THE PLANS WITH THE SYMBOL LIST. IT SHALL BE THE RESPONSIBILITY OF THE CONTRACTOR TO VERIFY THE INTENT OF ANY SYMBOL THAT IS SHOWN ON THE PLANS AND NOT INDICATED ON THE SYMBOL LIST WITH THE ENGINEER PRIOR TO BID.

G2. THE CONTRACTOR SHALL VERIFY THE LOCATION OF ALL UNDERGROUND UTILITIES WITHIN THE CONSTRUCTION AREA THREE (3) WORKING DAYS NOTICE BEFORE COMMENCING DIGGING. NOTIFY THE LOCAL AUTHORITY HAVING JURISDICTION AND WAIT THE REQUIRED TIME BEFORE COMMENCING TO DIG.

G3. THE CONTRACTOR SHALL COORDINATE CONDUIT RUNS, LIGHTING FIXTURES AND OTHER EQUIPMENT LOCATIONS WITH THE OTHER TRADE CONTRACTORS TO AVOID CONFLICTS.

G4. WHERE VOLTAGES AND FREQUENCIES ON THE DRAWINGS AND IN THE SPECIFICATIONS DIFFER FROM THE LOCAL ONES, ALL WORK SHALL BE PERFORMED USING THE LOCAL VOLTAGES AND FREQUENCIES.

G5. THE MINIMUM WIRE SIZE ON THE PROJECT SHALL BE 4mm². THE MINIMUM CONDUIT SIZE SHALL BE 20mm. THE MINIMUM BREAKER SIZE SHALL BE 20 AMPS.

G6. THE CONTRACTOR SHALL PUT A MAXIMUM OF 10 RECEPTACLES ON A 20A SINGLE POLE CIRCUIT.

G7. WHERE THE 1010 SCOPE REVIEW, 1015 TECHNICAL REVIEW, DRAWINGS, AND SPECIFICATIONS DIFFER FROM AMERICAN CODES OR STANDARDS, THE 1010, 1015, DRAWINGS, AND SPECIFICATIONS SHALL RULE.

G8. ALL CONDUIT AND DEVICES SHALL BE SURFACE MOUNTED UNLESS OTHERWISE INDICATED.

G9. CONTRACTOR SHALL COORDINATE ALL WORK WITH ALL OTHER TRADES TO ENSURE ALL WORK IS COMPLETED IN A PROFESSIONAL, WORKMAN–LIKE MANNER.

APPROVED:

A/E DESIGNER OF RECORD

SEAL:

US ARMY CORPS OF ENGINEERS
AFGHANISTAN ENGINEER DISTRICT

Mark	Description	Date	Appr.	Mark	Description	Date	Appr.

U.S. ARMY ENGINEER DISTRICT, AFGHANISTAN
CORPS OF ENGINEERS
APO AE 96338

Designed by: | Date: 5/19/10 | Rev: 0
Dwn by: | Ckd by: | Design file no.
Reviewed by: | Drawing code:
Submitted by: | File name: AF1024B-SE001GN | Plot date: 2010/06/08 | Plot scale:

STANDARD DESIGN
VARIOUS PROJECTS
VARIOUS LOCATIONS, AFGHANISTAN

NCO BARRACK

AF1024B–SE001GN – LAYOUT1

SHEET REFERENCE NUMBER:
B

R:\ENGINEERING\26 STANDARD DESIGNS\A-E STANDARD DESIGNS\NCO BARRACKS\AF1024B-SE001GN.DWG

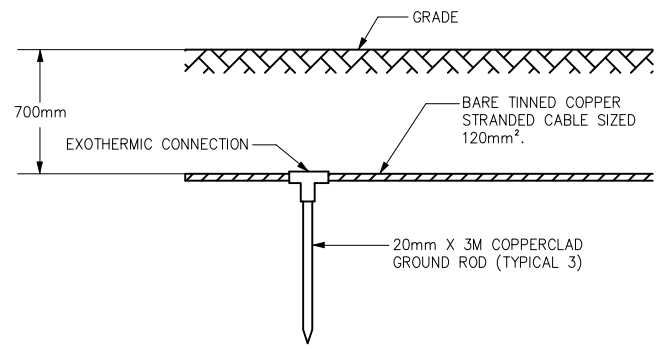

GROUND TRIODE SYSTEM DETAIL - ELEVATION (1 / E-501)
SCALE: NONE

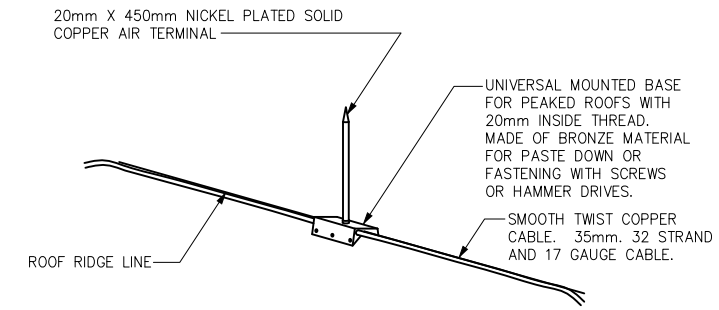

LIGHTNING PROTECTION AIR TERMINAL DETAIL (2 / E-501)
SCALE: NONE

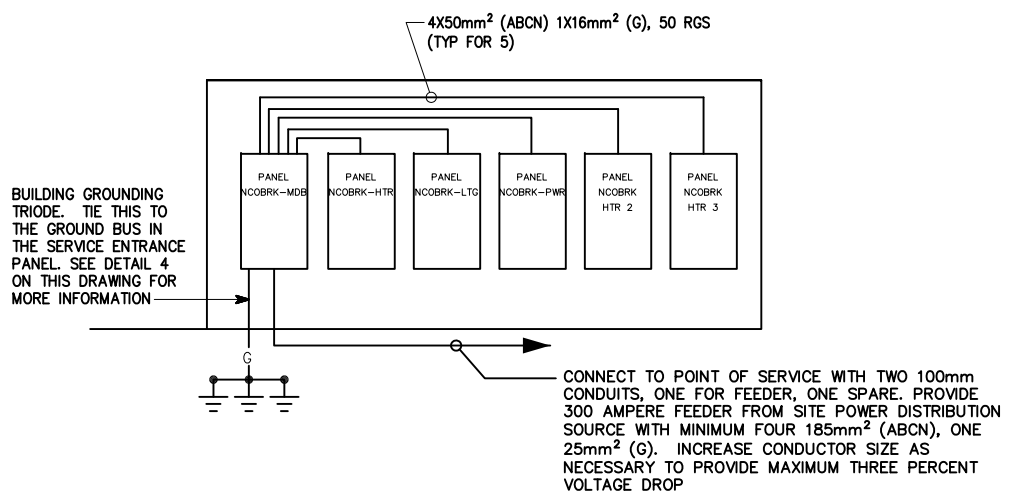

NCOBRK RISER DIAGRAM (3 / E-501)
SCALE: NONE

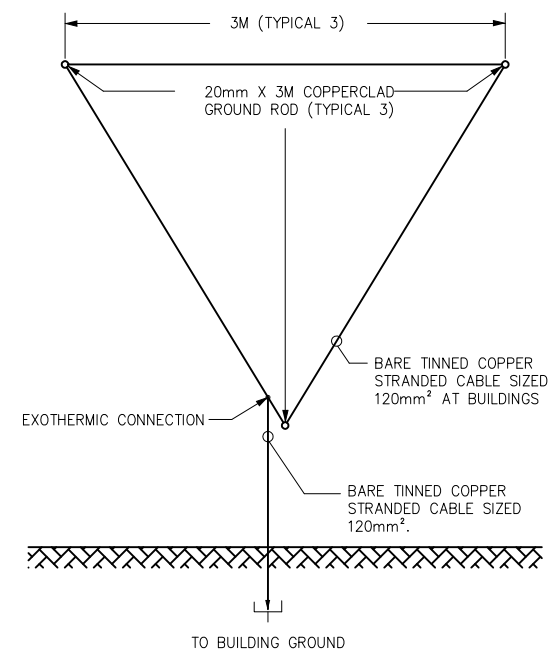

GROUND TRIODE SYSTEM DETAIL - PLAN (4 / E-501)
SCALE: NONE

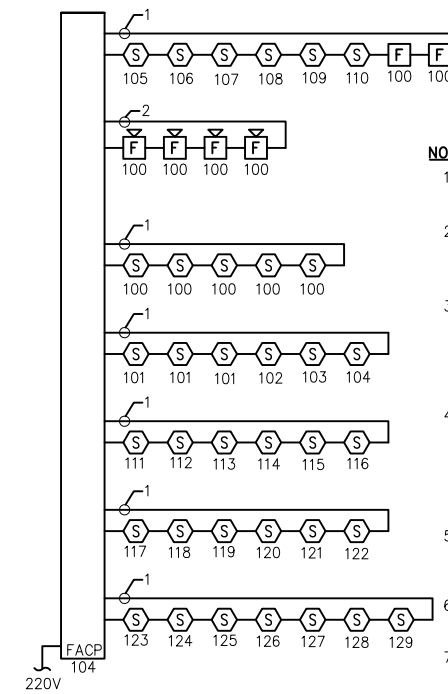

NOTES:

1. PROVIDE 2/C#2.5mm² FROM FIRE ALARM CONTROL PANEL TO DEVICE.
2. PROVIDE 2/C#2.5mm², NOTIFICATION APPLIANCE CIRCUIT (2/C#2.5mm² FOR STROBE).
3. ALL FIRE ALARM SYSTEM WIRING SHALL BE INSTALLED IN A DEDICATED METAL CONDUIT. ALL JUNCTION BOXES SHALL BE PAINTED RED AND MARKED "FIRE ALARM".
4. CONDUIT AND WIRING HAS NOT BEEN SHOWN ON THE DRAWINGS. THE ARRANGEMENT AND ROUTING OF CIRCUITS SHALL BE AT THE CONTRACTORS DISCRETION IN ACCORDANCE WITH NEC REQUIREMENTS.
5. FIRE ALARM CONTROL PANEL SHALL BE GROUNDED IN ACCORDANCE WITH NEC REQUIREMENTS.
6. FIELD VERIFY EXACT LOCATION AND QUANITIES OF ALL DEVICES.
7. ON ALL HVAC EQUIPMENT THAT SUPPLIES AIR INTO THE BUILDING, (SUPPLY FANS, AIR HANDLING EQUIPMENT) PROVIDE SHUTDOWN FUNCTION FROM FIRE ALARM PANEL HARDWIRED TO STARTER TO SHUTDOWN EQUIPMENT ON ALARM STATUS FROM PANEL.

TYPICAL FIRE ALARM RISER (5 / E-501)
SCALE: NONE

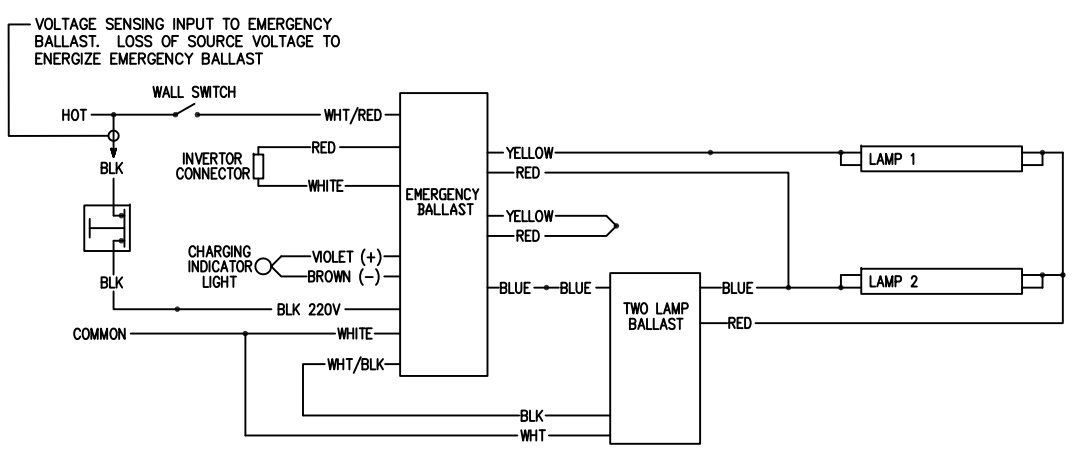

EMERGENCY FIXTURE WIRING DIAGRAM (6 / E-501)
SCALE: NONE

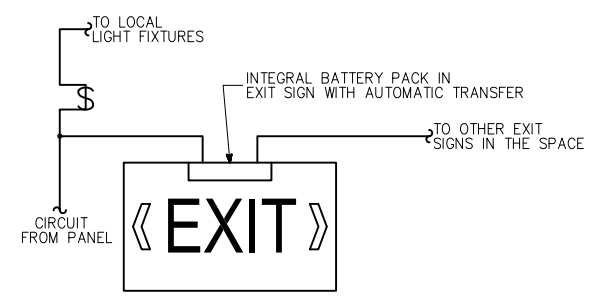

EXIT SIGN WIRING DIAGRAM (7 / E-501)
SCALE: NONE

US ARMY CORPS OF ENGINEERS
AFGHANISTAN ENGINEER DISTRICT

Mark	Description	Date	Appr.	Mark	Description	Date	Appr.

Designed by: Date: 5/19/10 Rev: 0
Dwn by: Ckd by: Design file no.
Reviewed by: Drawing code:
Submitted by: File name: AF1024B-SE501DT Plot date: 2010/06/08 Plot scale:

U.S. ARMY ENGINEER DISTRICT, AFGHANISTAN
CORPS OF ENGINEERS
APO AE 96338

STANDARD DESIGN
VARIOUS PROJECTS
VARIOUS LOCATIONS, AFGHANISTAN

NCO BARRACK

AF1024B-SE501DT - LAYOUT1
SHEET 1

APPROVED:

A/E DESIGNER OF RECORD

SEAL:

SHEET REFERENCE NUMBER:
B

R:\ENGINEERING\26 STANDARD DESIGNS\A-E STANDARD DESIGNS\NCO BARRACKS\AF1024B-SE501DT.DWG

(A) LARGER OF THE TWO SIZES GIVEN IN THE TABLES BELOW	
GROUNDING ELECTRODE CONDUCTOR (BASED ON AIC RATING)	
AIC RATING OF SERVICE EQUIPMENT	NECESSARY GROUNDING ELECTRODE CONDUCTOR SIZE
10K	(1) 35mm²
14K	(1) 50mm²
18K	(1) 70mm²
22K	(1) 70mm²
25K	(1) 70mm²
30K	(1) 95mm²
35K	(1) 120mm²
42K	(1) 150mm²
65K	(1) 185mm²
100K	(1) 300mm²
125K	(2) 185mm²
200K	(2) 300mm²
GROUNDING ELECTRODE CONDUCTOR (BASED ON NEC TABLE 250.66)	
SIZE OF LARGEST UNGROUNDED SERVICE CONDUCTOR OR EQUIVALENT AREA FOR PARALLEL CONDUCTORS	NECESSARY GROUNDING ELECTRODE CONDUCTOR SIZE
350 kcmil OR SMALLER	35mm²
OVER 350 kcmil TO 600 kcmil	70mm²
OVER 600 kcmil TO 1100 kcmil	70mm²
OVER 1100 kcmil	95mm²
NOTE: ALL SIZES ARE BASED ON COPPER CONDUCTORS.	

(B) EQUIPMENT GROUNDING CONDUCTOR	
RATING OR SETTING OF AUTOMATIC OVERCURRENT DEVICE IN CIRCUIT AHEAD OF EQUIPMENT, CONDUIT, ETC, NOT EXCEEDING (AMPERES)	NECESSARY EQUIPMENT GROUNDING CONDUCTOR SIZE
15	2.5mm²
20	4.0mm²
30	6.0mm²
40	6.0mm²
60	6.0mm²
100	10mm²
200	16mm²
300	25mm²
400	25mm²
500	35mm²
600	50mm²
800	70mm²
1000	70mm²
1200	95mm²
1600	120mm²
2000	150mm²
2500	185mm²
3000	240mm²
4000	300mm²
5000	400mm²
6000	400mm²
NOTE: ALL SIZES ARE BASED ON COPPER CONDUCTORS.	

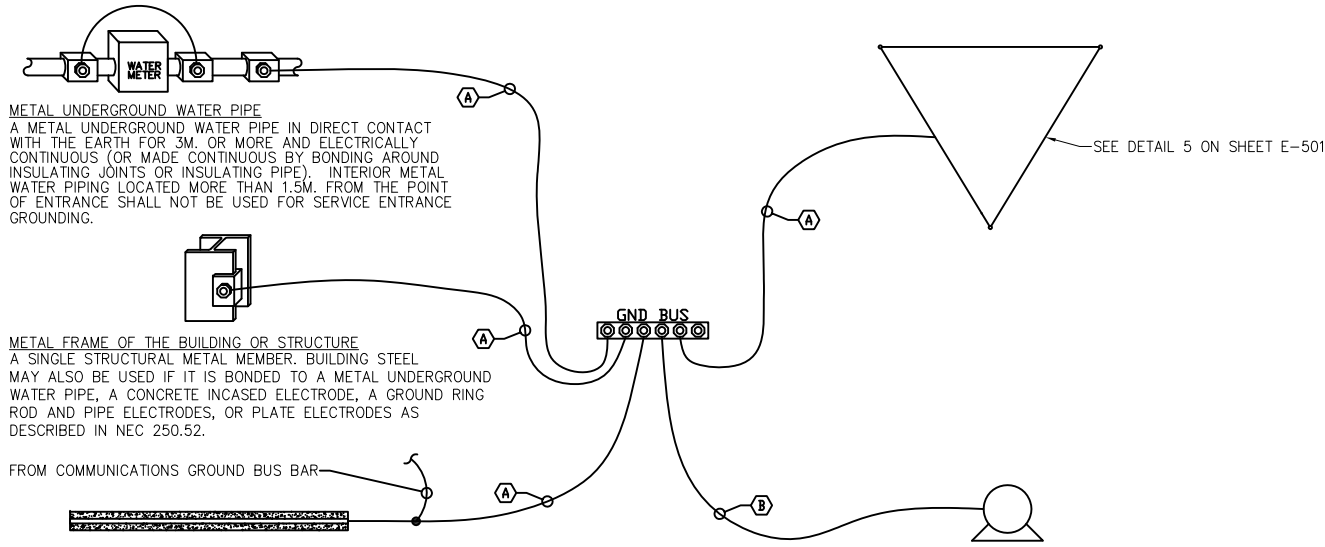

SERVICE ENTRANCE GROUNDING DETAIL (1 / E-502)
SCALE: NONE

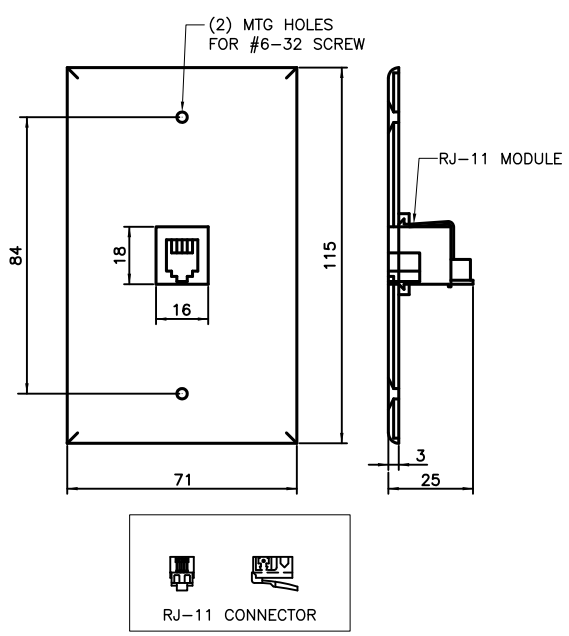

RJ-11 WALL PLATE JACK AND CONNECTOR DETAIL (2 / E-502)
SCALE: NONE

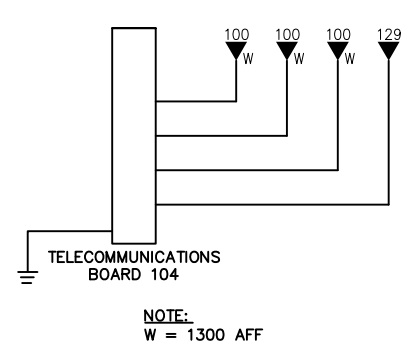

TELECOMMUNICATIONS RISER (3 / E-502)
SCALE: NONE

UNLESS NOTED OTHERWISE, LINEAR DIMENSIONS SHOWN ARE IN MILLIMETERS.

APPROVED:
A/E DESIGNER OF RECORD
SEAL:

US ARMY CORPS OF ENGINEERS
AFGHANISTAN ENGINEER DISTRICT

Mark	Description	Date	Appr.	Mark	Description	Date	Appr.

Designed by: Date: 5/19/10 Rev: 0
Dwn by: Ckd by: Design file no.
Reviewed by: Drawing code:
Submitted by: File name: AF1024B-SE502DT Plot date: 2010/06/06 Plot scale:

U.S. ARMY ENGINEER DISTRICT, AFGHANISTAN
CORPS OF ENGINEERS
APO AE 96338

STANDARD DESIGN
VARIOUS PROJECTS
VARIOUS LOCATIONS, AFGHANISTAN
NCO BARRACK
AF1024B-SE502DT - LAYOUT1
SHEET 2

SHEET REFERENCE NUMBER:
B

R:\ENGINEERING\26 STANDARD DESIGNS\A-E STANDARD DESIGNS\NCO BARRACKS\AF1024B-SE502DT.DWG

FIXTURE MARK 'B'

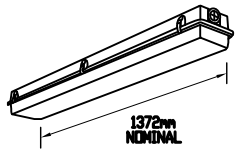

FIXTURE MARK 'C'

FIXTURE MARK 'G'

FIXTURE MARK 'H'

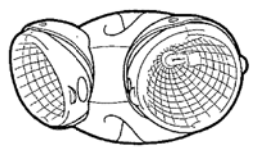

FIXTURE MARK 'E'

REMOTE BATTERY PACK

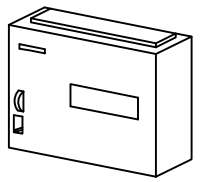

LIGHT FIXTURE SCHEDULE

FIXTURE MARK	STYLE NUMBER AND TYPE	NUMBER AND TYPE OF LAMPS	VOLTAGE	MOUNTING	NOTES
B	WET LOCATION VAPOR TIGHT SURFACE/PENDANT MOUNTED FLUORESCENT FIXTURE WITH PRISMATIC ACRYLIC LENS AND ELECTRONIC BALLAST	(2) 36W 3500K, T8 3600 LUMINS PER LAMP	220V – 1ϕ 50HZ	SURFACE MOUNTED	FURNISHED WITH ELECTRONIC BALLAST, VIRGIN ACRYLIC LENS.
B2	SAME AS FIXTURE 'B' WITH EMERGENCY BALLAST	(2) 36W 3500K, T8 3600 LUMINS PER LAMP	220V – 1ϕ 50HZ	SURFACE MOUNTED	FURNISHED WITH ELECTRONIC BALLAST, VIRGIN ACRYLIC LENS. EMERGENCY BALLAST WITH SELF TEST SWITCH.
C	INCANDESCENT ONE PIECE W/ APPROVED LENS STABILIZED HIGH IMPACT POLY CARBONATE.	(1) A19 – 100W INCANDESCENT	220V – 1ϕ 50HZ	WALL MOUNTED NEAR EXTERIOR DOORS AT 2.0M AFF	
G	WRAP AROUND SURFACE/PENDANT MOUNTED FLUORESCENT FIXTURE WITH PRISMATIC ACRYLIC LENS AND ELECTRONIC BALLAST	(2) 36W 3500K, T8 3600 LUMINS PER LAMP	220V – 1ϕ 50HZ	SURFACE MOUNTED	FURNISHED WITH ELECTRONIC BALLAST, VIRGIN ACRYLIC WRAP AROUND LENS.
G2	SAME AS FIXTURE 'G' WITH EMERGENCY BALLAST	(2) 36W 3500K, T8 3600 LUMINS PER LAMP	220V – 1ϕ 50HZ	SURFACE MOUNTED	FURNISHED WITH ELECTRONIC BALLAST, VIRGIN ACRYLIC WRAP AROUND LENS. EMERGENCY BALLAST WITH SELF TEST SWITCH.
H	REMOTE HEAD EXTERIOR LIGHT HEAD POWERED FROM REMOTE BATTERY PACK – 12V DOUBLE HEAD CORROSION RESISTANT WITH UL34 WEATHERPROOF CONSTRUCTION	(2) 12W/12V HALOGEN LAMP	12VDC	EXTERIOR WALL MOUNTED AT TOP OF DOOR HEIGHT	
E	UNIVERSAL MOUNT ENGINEER GRADE THERMOPLASTIC HOUSING EXIT SIGN WITH LED LAMPS, RED LETTERS 6" IN HEIGHT WITH ARROWS AS INDICATED, WITH 12V CADMIUM BATTERY WITH REMOTE HEAD CAPABILITY	LED LAMPS	220V – 1ϕ 50HZ	UNIVERSAL MOUNTING	
RBP	REMOTE BATTERY PACK	N/A	220V – 1ϕ 50HZ 12VDC	SURFACE MOUNTED	SEALED LEAD CADMIUM 3 YEAR FIRE RETARDANT THERMOPLASTIC HOUSING 220V PRIMARY / 12VDC SECONDARY

APPROVED:

A/E DESIGNER OF RECORD

SEAL:

US ARMY CORPS OF ENGINEERS
AFGHANISTAN ENGINEER DISTRICT

Mark	Description	Date	Appr.

Mark	Description	Date	Appr.

U.S. ARMY ENGINEER DISTRICT, AFGHANISTAN
CORPS OF ENGINEERS
APO AE 96338

Designed by:
Dwn by:
Ckd by:
Reviewed by:
Submitted by:
Date: 5/19/10
Rev: 0
Design file no.
Drawing code:
File name: AF1024B-SE601SC
Plot date: 2010/06/06
Plot scale:

STANDARD DESIGN
VARIOUS PROJECTS
VARIOUS LOCATIONS, AFGHANISTAN

NCO BARRACK

AF1024B–SE601SC – LAYOUT1

SHEET REFERENCE NUMBER:
B

R:\ENGINEERING\26 STANDARD DESIGNS\A-E STANDARD DESIGNS\NCO BARRACKS\AF1024B-SE601SC.DWG

MOUNTING:	SURFACE	PANEL NAME:	MDB
ENCLOSURE RATING:	IP21	LOCATION:	ELECTRICAL ROOM 102
MAINS:	300A MCCB	SERVED FROM:	
BUS AMPACITY:	400A		
RCD mA / DELAY mS	100 / 400		
BRANCH BREAKER TYPE:	BOLT-ON		

SERVICE VOLTAGE:	380Y/220+10/-6%
PHASE, FREQ.:	3P/4W, 50HZ
MINIMUM AIC:	65,000
7 MODE TVSS, LEVEL:	YES, 120 KA
GND. BUS ISOLATED:	NO
NEUTRAL BUS:	100%

#	LOAD DESCRIPTION (NO. POINTS- SKT,LTG)	CB PH, G, CND		VA PH-A	VA PH-B	VA PH-C		LOAD DESCRIPTION (NO. POINTS- SKT,LTG)	CB PH, G, CND	#
1	LIGHTING PANEL - LTG ROOM 102	3P100A 50, 16, 50 MM	>	5346				RECEPTACLE PANEL - PWR ROOM 102	3P100A 50, 16, 50 MM	2
				7740	<<<	<<<	<			
3			>	>>>	5025					4
					6840	<<<	<			
5			>	>>>	>>>	5176				6
						7380	<			
7	HWH-1- ROOM 103	3P32A 10,6,25MM	>	5000				HEATING PANEL - HTR ROOM 102	3P100A 50, 16, 50 MM	8
				11100	<<<	<<<	<			
9			>	>>>	5000					10
					11200	<<<	<			
11			>	>>>	>>>	5000				12
						10500	<			
13	HC-1-ROOM 101	3P32A 10,6,25MM	>	5000				HEATING PANEL - HTR2 ROOM 102	3P100A 50, 16, 50 MM	14
				11800	<<<	<<<	<			
15			>	>>>	5000					16
					11100	<<<	<			
17			>	>>>	>>>	5000				18
						12500	<			
19	SPARE	3P40A	>	0.0				HEATING PANEL - HTR3 ROOM 102	3P100A 50, 16, 50 MM	20
				5200	<<<	<<<	<			
21			>	>>>	0.0					22
					5200	<<<	<			
23			>	>>>	>>>	0.0				24
						5920	<			
25	SPARE	3P20A	>	0.0				SPARE	3P20A	26
				0.0	<<<	<<<	<			
27			>	>>>	0.0					28
					0.0	<<<	<			
29			>	>>>	>>>	0.0				30
						0.0	<			
31	SPACE		>	0.0				SPACE		26
				0.0	<<<	<<<	<			
33			>	>>>	0.0					28
					0.0	<<<	<			
29			>	>>>	>>>	0.0				30
						0.0	<			
25	SPACE		>	0.0				SPACE		26
				0.0	<<<	<<<	<			
27			>	>>>	0.0					28
					0.0	<<<	<			
29			>	>>>	>>>	0.0				30
						0.0	<			
	CONNECTED LOAD			51186	49365	51476		ELCB, 15mA, 50 mS = ±		
	DIVERSIFIED LOAD KVA				136824			Applied Diversity Factor = 90%		
	GROWTH ALLOWANCE - IN PANELS				0			(LTG=90%; AIRCON=90%; KITCHEN=50%;		
	MINIMUM DESIGN AMPS, @ 380V				208			SOCKETS=50%; MISC. POWER=50%)		

MOUNTING:	SURFACE	PANEL NAME:	PWR
ENCLOSURE RATING:	IP21	LOCATION:	ELECTRICAL ROOM
MAINS:	100A MCCB	SERVED FROM:	MDB
BUS AMPACITY:	100 A		
RCD mA / DELAY mS	100or30 / 400		
BRANCH BREAKER TYPE:	BOLT-ON		

SERVICE VOLTAGE:	380Y/220 +10/-6%
PHASE, FREQ.:	3P/4W, 50HZ
MINIMUM AIC:	65,000
7 MODE TVSS, LEVEL:	NO
GND. BUS ISOLATED:	NO
NEUTRAL BUS:	100%

#	LOAD DESCRIPTION (NO. POINTS- SKT,LTG)	CB PH, G, CND		VOLTS AMPERES PH-A	VOLTS AMPERES PH-B	VOLTS AMPERES PH-C		LOAD DESCRIPTION (NO. POINTS- SKT,LTG)	CB PH, G, CND	#
1	RECEPTACLES-111,112(6)	1P20A 4, 4, 20 MM	>	1080				RECEPTACLES-112,113(6)	1P20A 4, 4, 20 MM	2
				1080	<<<	<<<	<			
3	SPARE	1P20A 4, 4, 20 MM	>	>>>	0			RECEPTACLES-115,116(6)	1P20A 4, 4, 20 MM	4
					1080	<<<	<			
5	RECEPTACLES-114,115(6)	1P20A 4, 4, 20 MM	>	>>>	>>>	1080		RECEPTACLES-108,109(6)	1P20A 4, 4, 20 MM	6
						1080	<			
7	RECEPTACLES-107,108(6)	1P20A 4, 4, 20 MM	>	1080				RECEPTACLES-105,106(4)	1P20A 4, 4, 20 MM	8
				720	<<<	<<<	<			
9	RECEPTACLES-100(4)	1P20A 4, 4, 20 MM	>	>>>	720			RECEPTACLES-100(4)	1P20A 4, 4, 20 MM	10
					720	<<<	<			
11	RECEPTACLES-117,118(6)	1P20A 4, 4, 20 MM	>	>>>	>>>	1080		RECEPTACLES-118,119(6)	1P20A 4, 4, 20 MM	12
						1080	<			
13	RECEPTACLES-120,121(6)	1P20A 4, 4, 20 MM	>	1080				RECEPTACLES-121,122(6)	1P20A 4, 4, 20 MM	14
				1080	<<<	<<<	<			
15	RECEPTACLES-123(4)	1P20A 4, 4, 20 MM	>	>>>	720			RECEPTACLES-124,125(6)	1P20A 4, 4, 20 MM	16
					1080	<<<	<			
17	RECEPTACLES-125,126(6)	1P20A 4, 4, 20 MM	>	>>>	>>>	1080		RECEPTACLES-127,128(6)	1P20A 4, 4, 20 MM	18
						1080	<			
19	RECEPTACLES-128,129(6)	1P20A 4, 4, 20 MM	>	1080				SPARE	1P20A	20
				0	<<<	<<<	<			
21	RECEPTACLES-100(4)	1P20A 4, 4, 20 MM	>	>>>	720			RECEPTACLES-105(4)	1P20A 4, 4, 20 MM	22
					720	<<<	<			
23	RECEPTACLES-104(1)	1P20A 4, 4, 20 MM	>	>>>	>>>	180		RECEPTACLES-102,103(4)	1P20A 4, 4, 20 MM	24
						720	<			
25	RECEPTACLES-104(1)	1P20A 4, 4, 20 MM	>	180				RECEPTACLES-101(2)	1P20A 4, 4, 20 MM	26
				360	<<<	<<<	<			
27	RECEPTACLES-110(4)	1P20A 4, 4, 20 MM	>	>>>	720			RECEPTACLES-101(2)	1P20A 4, 4, 20 MM	28
					360	<<<	<			
29	SPARE	1P20A	>	>>>	>>>	0		SPARE	1P20A	30
							<			
31	SPACE		>	0				SPACE		32
				0	<<<	<<<	<			
33	SPACE		>	>>>	0			SPACE		34
					0	<<<	<			
35	SPACE		>	>>>	>>>	0		SPACE		36
						0	<			
37	SPACE		>	0				SPACE		38
				0	<<<	<<<	<			
39	SPACE		>	>>>	0			SPACE		40
					0	<<<	<			
41	SPACE		>	>>>	>>>	0		SPACE		42
						0	<			
	CONNECTED LOAD--WATTS			7,740	6,840	7,380		ELCB, 15mA, 50 mS = ±		
	DIVERSIFIED LOAD--VA @ A.D.F.				15			Applied Diversity Factor = 70%		
	GROWTH ALLOWANCE (25 %)--VA				4			(LTG=100%; AIRCON=90%; KITCHEN=50%		
	MIN. DESIGN AMPS, @ 380V				29			SOCKETS=50%; MISC. POWER=50%)		

US ARMY CORPS OF ENGINEERS
AFGHANISTAN ENGINEER DISTRICT

Mark	Description	Date	Appr.

Mark	Description	Date	Appr.

Designed by:
Dwn by: Ckd by:
Date: 5/19/10 Rev: 0
Design file no.
Drawing code:
Reviewed by:
Submitted by:
File name: AF1024B-SE602SC
Plot date: 2010/06/08
Plot scale:

U.S. ARMY ENGINEER DISTRICT, AFGHANISTAN
CORPS OF ENGINEERS
APO AE 96338

STANDARD DESIGN
VARIOUS PROJECTS
VARIOUS LOCATIONS, AFGHANISTAN

NCO BARRACK

AF1024B–SE602SC – LAYOUT1
SHEET 1

APPROVED:

A/E DESIGNER OF RECORD

SEAL:

SHEET REFERENCE NUMBER:
B

R:\ENGINEERING\26 STANDARD DESIGNS\A-E STANDARD DESIGNS\NCO BARRACKS\AF1024B-SE602SC.DWG

MOUNTING:	SURFACE	PANEL NAME:	LTG
ENCLOSURE RATING:	IP21	LOCATION:	ELECTRICAL ROOM
MAINS:	100A MCCB	SERVICE VOLTAGE:	380Y/220 +10/-6%
BUS AMPACITY:	100 A	PHASE, FREQ.:	3P/4W, 50HZ
RCD mA / DELAY mS	100or30 / 400	MINIMUM AIC:	65,000
BRANCH BREAKER TYPE:	BOLT-ON	7 MODE TVSS, LEVEL:	NO
SERVED FROM:	MDP	GND. BUS ISOLATED:	NO
		NEUTRAL BUS:	100%

#	LOAD DESCRIPTION (NO. POINTS- SKT,LTG)	CB PH, G, CND		VOLTS AMPERES PH-A	PH-B	PH-C		LOAD DESCRIPTION (NO. POINTS- SKT,LTG)	CB PH, G, CND	#
1	LIGHTING-ROOMS 111,112,113,114,115,116 (12)	1P20A 4, 4, 20 MM	>	1073				LIGHTING-ROOMS 105,106,107,108,109,110 (12)	1P20A 4, 4, 20 MM	2
				1073	<<<	<<<	<			
3	LIGHTING-ROOMS 117,118,119,120,121,122 (12)	1P20A 4, 4, 20 MM	>	>>>	1073			LIGHTING-ROOMS 123,124,125,126,127,128,129 (14)	1P20A 4, 4, 20 MM	4
					1252	<<<	<			
5	LIGHTING-CORRIDORS (19)	1P20A 4, 4, 20 MM	>	>>>	>>>	1656		LIGHTING-101 (17)	1P20A 4, 4, 20 MM	6
						1120	<			
7	CEILING FANS 123-124(2)	1P20A 4, 4, 20 MM	>	600				CEILING FANS 100-110(7)	1P20A 4, 4, 20 MM	8
				2100	<<<	<<<	<			
9	CEILING FANS 117-122(6)	1P20A 4, 4, 20 MM	>	>>>	1800			CEILING FANS 127-129(3)	1P20A 4, 4, 20 MM	10
					900	<<<	<			
11	CEILING FANS 125-126(2)	1P20A 4, 4, 20 MM	>	>>>	>>>	600		CEILING FANS 111-116(6)	1P20A 4, 4, 20 MM	12
						1800	<			
13	FACP- COMM ROOM	1P20A 4, 4, 20 MM	>	500				SPARE	1P20A	14
				0	<<<	<<<	<			
15	SPARE	1P20A	>	>>>	0			SPARE	1P20A	16
					0	<<<	<			
17	SPARE	1P20A	>	>>>	>>>	0		SPARE	1P20A	18
						0	<			
19	SPARE	1P20A	>	0				SPARE	1P20A	20
				0	<<<	<<<	<			
21	SPARE	1P20A	>	>>>	0			SPARE	1P20A	22
					0	<<<	<			
23	SPARE	1P20A	>	>>>	>>>	0		SPARE	1P20A	24
						0	<			
25	SPARE	1P20A	>	0				SPARE	1P20A	26
				0	<<<	<<<	<			
27	SPARE	1P20A	>	>>>	0			SPARE	1P20A	28
					0	<<<	<			
29	SPACE		>	>>>	>>>	0		SPACE		30
						0	<			
31	SPACE		>	0				SPACE		32
				0	<<<	<<<	<			
33	SPACE		>	>>>	0			SPACE		34
					0	<<<	<			
35	SPACE		>	>>>	>>>	0		SPACE		36
						0	<			
37	SPACE		>	0				SPACE		38
				0	<<<	<<<	<			
39	SPACE		>	>>>	0			SPACE		40
					0	<<<	<			
41	SPACE		>	>>>	>>>	0		SPACE		42
						0	<			
	CONNECTED LOAD--WATTS			5,346	5,025	5,176		ELCB, 15mA, 50 mS = ±		
	DIVERSIFIED LOAD--VA @ A.D.F.				16			Applied Diversity Factor = 100%		
	GROWTH ALLOWANCE (25 %)--VA				4			(LTG=100%; AIRCON=90%; KITCHEN=50%		
	MIN. DESIGN AMPS, @ 380V				30			SOCKETS=50%; MISC. POWER=50%)		

MOUNTING:	SURFACE	PANEL NAME:	HTR
ENCLOSURE RATING:	IP21	LOCATION:	ELECTRICAL ROOM
MAINS:	100A MCCB	SERVICE VOLTAGE:	380Y/220 +10/-6%
BUS AMPACITY:	100 A	PHASE, FREQ.:	3P/4W, 50HZ
RCD mA / DELAY mS	100or30 / 400	MINIMUM AIC:	65,000
BRANCH BREAKER TYPE:	BOLT-ON	7 MODE TVSS, LEVEL:	NO
SERVED FROM:	MDB	GND. BUS ISOLATED:	NO
		NEUTRAL BUS:	100%

#	LOAD DESCRIPTION (NO. POINTS- SKT,LTG)	CB PH, G, CND		VOLTS AMPERES PH-A	PH-B	PH-C		LOAD DESCRIPTION (NO. POINTS- SKT,LTG)	CB PH, G, CND	#
1	EH-2- ROOM 117	2P20A 4, 4, 20 MM	>	1300				EH-2- ROOM 118	2P20A 4, 4, 20 MM	2
				1300	<<<	<<<	<			
3			>	>>>	1300					4
					1300	<<<	<			
5	EH-2- ROOM 119	2P20A 4, 4, 20 MM	>	>>>	>>>	1300		EH-2- ROOM 120	2P20A 4, 4, 20 MM	6
						1300	<			
7			>	1300						8
				1300	<<<	<<<	<			
9	EH-2-ROOM 121	2P20A 4, 4, 20 MM	>	>>>	1300			EH-1- ROOM 122	2P20A 4, 4, 20 MM	10
					2000	<<<	<			
11			>	>>>	>>>	1300				12
						2000	<			
13	EH-1-ROOM 123	2P20A 4, 4, 20 MM	>	2000				EH-2-ROOM 124	2P20A 4, 4, 20 MM	14
				1300	<<<	<<<	<			
15			>	>>>	2000					16
					1300	<<<	<			
17	EH-2-ROOM 125	2P20A 4, 4, 20 MM	>	>>>	>>>	1300		EH-2-ROOM 126	2P20A 4, 4, 20 MM	18
						1300	<			
19			>	1300						20
				1300	<<<	<<<	<			
21	EH-1-ROOM 101	2P20A 4, 4, 20 MM	>	>>>	2000			SPARE	2P20A	22
					0	<<<	<			
23			>	>>>	>>>	2000				24
						0	<			
25	SPARE	1P20A	>	0				SPARE	1P20A	26
				0	<<<	<<<	<			
27	SPARE	1P20A	>	>>>	0			SPARE	1P20A	28
					0	<<<	<			
29	SPARE	1P20A	>	>>>	>>>	0		SPARE	1P20A	30
						0	<			
31	SPARE	1P20A	>	0				SPARE	1P20A	32
				0	<<<	<<<	<			
33	SPARE	1P20A	>	>>>	0			SPARE	1P20A	34
					0	<<<	<			
35	SPARE	1P20A	>	>>>	>>>	0		SPARE	1P20A	36
						0	<			
37	SPACE		>	0				SPACE		38
				0	<<<	<<<	<			
39	SPACE		>	>>>	0			SPACE		40
					0	<<<	<			
41	SPACE		>	>>>	>>>	0		SPACE		42
						0	<			
	CONNECTED LOAD--WATTS			11,100	11,200	10,500		ELCB, 15mA, 50 mS = ±		
	DIVERSIFIED LOAD--VA @ A.D.F.				30			Applied Diversity Factor = 90%		
	GROWTH ALLOWANCE (25 %)--VA				7			(LTG=100%; AIRCON=90%; KITCHEN=50%		
	MIN. DESIGN AMPS, @ 380V				56			SOCKETS=50%; MISC. POWER=50%)		

US ARMY CORPS OF ENGINEERS
AFGHANISTAN ENGINEER DISTRICT

Mark	Description	Date	Appr.
Mark	Description	Date	Appr.

Designed by:
Dwn by: Ckd by:
Reviewed by:
Submitted by:
Date: 5/19/10 Rev: 0
Design file no.
Drawing code:
File name: AF1024B-SE603SC
Plot date: 2010/06/08
Plot scale:

U.S. ARMY ENGINEER DISTRICT, AFGHANISTAN
CORPS OF ENGINEERS
APO AE 96338

APPROVED:

A/E DESIGNER OF RECORD

SEAL:

STANDARD DESIGN
VARIOUS PROJECTS
VARIOUS LOCATIONS, AFGHANISTAN

NCO BARRACK

AF1024B-SE603SC – LAYOUT1
SHEET 2

SHEET REFERENCE NUMBER:
B

R:\ENGINEERING\26 STANDARD DESIGNS\A-E STANDARD DESIGNS\NCO BARRACKS\AF1024B-SE603SC.DWG

MOUNTING:	SURFACE	PANEL NAME:	HTR2
ENCLOSURE RATING:	IP21	LOCATION:	ELECTRICAL ROOM
MAINS:	100A MCCB	SERVED FROM:	MDB
BUS AMPACITY:	100 A		
RCD mA / DELAY mS	100or30 / 400		
BRANCH BREAKER TYPE:	BOLT-ON		

SERVICE VOLTAGE:	380Y/220 +10/-6%
PHASE, FREQ.:	3P/4W, 50HZ
MINIMUM AIC:	65,000
7 MODE TVSS, LEVEL:	NO
GND. BUS ISOLATED:	NO
NEUTRAL BUS:	100%

#	LOAD DESCRIPTION (NO. POINTS- SKT,LTG)	CB PH, G, CND		VOLTS AMPERES PH-A	PH-B	PH-C		LOAD DESCRIPTION (NO. POINTS- SKT,LTG)	CB PH, G, CND	#
1	EH-2-ROOM 127	2P20A	>	1300				EH-2-ROOM 128	2P20A	2
		4, 4, 20 MM		1300	<<<	<<<	<		4, 4, 20 MM	
3			>	>>>	1300					4
					1300	<<<	<			
5	EH-2-ROOM 129	2P20A	>	>>>	>>>	1300		EH-2-ROOM 105	2P20A	6
		4, 4, 20 MM				1300	<		4, 4, 20 MM	
7			>	1300						8
				1300	<<<	<<<	<			
9	EH-2-ROOM 106	2P20A	>	>>>	1300			EH-2-ROOM 107	2P20A	10
		4, 4, 20 MM			1300	<<<	<		4, 4, 20 MM	
11			>	>>>	>>>	1300				12
						1300	<			
13	EH-2-ROOM 108	2P20A	>	1300				EH-2-ROOM 109	2P20A	14
		4, 4, 20 MM		1300	<<<	<<<	<		4, 4, 20 MM	
15			>	>>>	1300					16
					1300	<<<	<			
17	EH-1-ROOM 110	2P20A	>	>>>	>>>	2000		EH-1-ROOM 111	2P20A	18
		4, 4, 20 MM				2000	<		4, 4, 20 MM	
19			>	2000						20
				2000	<<<	<<<	<			
21	EH-2- ROOM 100	2P20A	>	>>>	1300			EH-1-ROOM 101	2P20A	22
		4, 4, 20 MM			2000	<<<	<		4, 4, 20 MM	
23			>	>>>	>>>	1300				24
						2000	<			
25	SPARE	1P20A	>	0				SPARE	1P20A	26
				0	<<<	<<<	<			
27	SPARE	1P20A	>	>>>	0			SPARE	1P20A	28
					0	<<<	<			
29	SPARE	1P20A	>	>>>	>>>	0		SPARE	1P20A	30
						0	<			
31	SPARE	1P20A	>	0				SPARE	1P20A	32
				0	<<<	<<<	<			
33	SPARE	1P20A	>	>>>	0			SPARE	1P20A	34
					0	<<<	<			
35	SPARE	1P20A	>	>>>	>>>	0		SPARE	1P20A	36
						0	<			
37	SPACE		>	0				SPACE		38
				0	<<<	<<<	<			
39	SPACE		>	>>>	0			SPACE		40
					0	<<<	<			
41	SPACE		>	>>>	>>>	0		SPACE		42
						0	<			
	CONNECTED LOAD--WATTS			11,800	11,100	12,500		ELCB, 15mA, 50 mS = ±		
	DIVERSIFIED LOAD--VA @ A.D.F.				32			Applied Diversity Factor = 90%		
	GROWTH ALLOWANCE (25 %)--VA				8			(LTG=100%; AIRCON=90%; KITCHEN=50%		
	MIN. DESIGN AMPS, @ 380V				61			SOCKETS=50%; MISC. POWER=50%)		

MOUNTING:	SURFACE	PANEL NAME:	HTR3
ENCLOSURE RATING:	IP21	LOCATION:	ELECTRICAL ROOM
MAINS:	100A MCCB	SERVED FROM:	MDB
BUS AMPACITY:	100 A		
RCD mA / DELAY mS	100or30 / 400		
BRANCH BREAKER TYPE:	BOLT-ON		

SERVICE VOLTAGE:	380Y/220 +10/-6%
PHASE, FREQ.:	3P/4W, 50HZ
MINIMUM AIC:	65,000
7 MODE TVSS, LEVEL:	NO
GND. BUS ISOLATED:	NO
NEUTRAL BUS:	100%

#	LOAD DESCRIPTION (NO. POINTS- SKT,LTG)	CB PH, G, CND		VOLTS AMPERES PH-A	PH-B	PH-C		LOAD DESCRIPTION (NO. POINTS- SKT,LTG)	CB PH, G, CND	#
1	EH-2-ROOM 112	2P20A	>	1300				EH-2-ROOM 113	2P20A	2
		4, 4, 20 MM		1300	<<<	<<<	<		4, 4, 20 MM	
3			>	>>>	1300					4
					1300	<<<	<			
5	EH-2-ROOM 114	2P20A	>	>>>	>>>	1300		EH-2-ROOM 115	2P20A	6
		4, 4, 20 MM				1300	<		4, 4, 20 MM	
7			>	1300						8
				1300	<<<	<<<	<			
9	EH-2-ROOM 116	2P20A	>	>>>	1300			EH-2-ROOM 100	2P20A	10
		4, 4, 20 MM			1300	<<<	<		4, 4, 20 MM	
11			>	>>>	>>>	1300				12
						1300	<			
13	SPARE	2P20A	>	0				EH-1-ROOM 100	2P20A	14
				0	<<<	<<<	<		4, 4, 20 MM	
15			>	>>>	0					16
					0	<<<	<			
17	SPARE	2P20A	>	>>>	>>>	0		EF-1,EF-2,SF-1 ROOM 101	1P20A	18
						720	<		4, 4, 20 MM	
19			>	0				SPARE	1P20A	20
				0	<<<	<<<	<			
21	SPARE	2P20A	>	>>>	0			SPARE	2P20A	22
					0	<<<	<			
23			>	>>>	>>>	0				24
						0	<			
25	SPARE	1P20A	>	0				SPARE	1P20A	26
				0	<<<	<<<	<			
27	SPARE	1P20A	>	>>>	0			SPARE	1P20A	28
					0	<<<	<			
29	SPARE	1P20A	>	>>>	>>>	0		SPARE	1P20A	30
						0	<			
31	SPARE	1P20A	>	0				SPARE	1P20A	32
				0	<<<	<<<	<			
33	SPARE	1P20A	>	>>>	0			SPARE	1P20A	34
					0	<<<	<			
35	SPARE	1P20A	>	>>>	>>>	0		SPARE	1P20A	36
						0	<			
37	SPACE		>	0				SPACE		38
				0	<<<	<<<	<			
39	SPACE		>	>>>	0			SPACE		40
					0	<<<	<			
41	SPACE		>	>>>	>>>	0		SPACE		42
						0	<			
	CONNECTED LOAD--WATTS			5,200	5,200	5,920		ELCB, 15mA, 50 mS = ±		
	DIVERSIFIED LOAD--VA @ A.D.F.				15			Applied Diversity Factor = 90%		
	GROWTH ALLOWANCE (25 %)--VA				4			(LTG=100%; AIRCON=90%; KITCHEN=50%		
	MIN. DESIGN AMPS, @ 380V				28			SOCKETS=50%; MISC. POWER=50%)		

APPROVED:

A/E DESIGNER OF RECORD

SEAL:

US ARMY CORPS OF ENGINEERS
AFGHANISTAN ENGINEER DISTRICT

Mark	Description	Date	Appr.	Mark	Description	Date	Appr.

Designed by: Dwn by: Ckd by: Reviewed by: Submitted by:
Date: 5/19/10 Rev: 0
Design file no.
Drawing code:
File name: AF1024B-SE604SC
Plot date: 20100805
Plot scale:

U.S. ARMY ENGINEER DISTRICT, AFGHANISTAN
CORPS OF ENGINEERS
APO AE 96338

STANDARD DESIGN
VARIOUS PROJECTS
VARIOUS LOCATIONS, AFGHANISTAN

NCO BARRACKS

ELECTRICAL PANEL SCHEDULES
SHEET 3

SHEET REFERENCE NUMBER:
B
E–604

R:\ENGINEERING\26 STANDARD DESIGNS\A–E STANDARD DESIGNS\NCO BARRACKS\AF1024B–SE604SC.DWG

MOUNTING:	SURFACE	PANEL NAME:	HTR2
ENCLOSURE RATING:	IP21	LOCATION:	ELECTRICAL ROOM
MAINS:	100A MCCB	SERVICE FROM:	MDB
BUS AMPACITY:	100 A		
RCD mA / DELAY mS	100or30 / 400		
BRANCH BREAKER TYPE:	BOLT-ON		

SERVICE VOLTAGE:	380Y/220 +10/-6%
PHASE, FREQ.:	3P/4W, 50HZ
MINIMUM AIC:	65,000
7 MODE TVSS, LEVEL:	NO
GND. BUS ISOLATED:	NO
NEUTRAL BUS:	100%

#	LOAD DESCRIPTION (NO. POINTS- SKT,LTG)	CB PH, G, CND		VOLTS AMPERES PH-A	PH-B	PH-C		LOAD DESCRIPTION (NO. POINTS- SKT,LTG)	CB PH, G, CND	#
1	EH-2-ROOM 127	2P20A	>	1300				EH-2-ROOM 128	2P20A	2
		4, 4, 20 MM		1300	<<<	<<<	<		4, 4, 20 MM	
3			>	>>>	1300					4
					1300	<<<	<			
5	EH-2-ROOM 129	2P20A	>	>>>	>>>	1300		EH-2-ROOM 105	2P20A	6
		4, 4, 20 MM				1300	<		4, 4, 20 MM	
7			>	1300						8
				1300	<<<	<<<	<			
9	EH-2-ROOM 106	2P20A	>	>>>	1300			EH-2-ROOM 107	2P20A	10
		4, 4, 20 MM			1300	<<<	<		4, 4, 20 MM	
11			>	>>>	>>>	1300				12
						1300	<			
13	EH-2-ROOM 108	2P20A	>	1300				EH-2-ROOM 109	2P20A	14
		4, 4, 20 MM		1300	<<<	<<<	<		4, 4, 20 MM	
15			>	>>>	1300					16
					1300	<<<	<			
17	EH-1-ROOM 110	2P20A	>	>>>	>>>	2000		EH-1-ROOM 111	2P20A	18
		4, 4, 20 MM				2000	<		4, 4, 20 MM	
19			>	2000						20
				2000	<<<	<<<	<			
21	EH-2- ROOM 100	2P20A	>	>>>	1300			EH-1-ROOM 101	2P20A	22
		4, 4, 20 MM			2000	<<<	<		4, 4, 20 MM	
23			>	>>>	>>>	1300				24
						2000	<			
25	SPARE	1P20A	>	0				SPARE	1P20A	26
				0	<<<	<<<	<			
27	SPARE	1P20A	>	>>>	0			SPARE	1P20A	28
					0	<<<	<			
29	SPARE	1P20A	>	>>>	>>>	0		SPARE	1P20A	30
						0	<			
31	SPARE	1P20A	>	0				SPARE	1P20A	32
				0	<<<	<<<	<			
33	SPARE	1P20A	>	>>>	0			SPARE	1P20A	34
					0	<<<	<			
35	SPARE	1P20A	>	>>>	>>>	0		SPARE	1P20A	36
						0	<			
37	SPACE		>	0				SPACE		38
				0	<<<	<<<	<			
39	SPACE		>	>>>	0			SPACE		40
					0	<<<	<			
41	SPACE		>	>>>	>>>	0		SPACE		42
						0	<			

CONNECTED LOAD--WATTS	11,800	11,100	12,500	ELCB, 15mA, 50 mS = ±
DIVERSIFIED LOAD--VA @ A.D.F.		32		Applied Diversity Factor = 90%
GROWTH ALLOWANCE (25 %)--VA		8		(LTG=100%; AIRCON=90%; KITCHEN=50%
MIN. DESIGN AMPS, @ 380V		61		SOCKETS=50%; MISC. POWER=50%)

MOUNTING:	SURFACE	PANEL NAME:	HTR3
ENCLOSURE RATING:	IP21	LOCATION:	ELECTRICAL ROOM
MAINS:	100A MCCB	SERVICE FROM:	MDB
BUS AMPACITY:	100 A		
RCD mA / DELAY mS	100or30 / 400		
BRANCH BREAKER TYPE:	BOLT-ON		

SERVICE VOLTAGE:	380Y/220 +10/-6%
PHASE, FREQ.:	3P/4W, 50HZ
MINIMUM AIC:	65,000
7 MODE TVSS, LEVEL:	NO
GND. BUS ISOLATED:	NO
NEUTRAL BUS:	100%

#	LOAD DESCRIPTION (NO. POINTS- SKT,LTG)	CB PH, G, CND		VOLTS AMPERES PH-A	PH-B	PH-C		LOAD DESCRIPTION (NO. POINTS- SKT,LTG)	CB PH, G, CND	#
1	EH-2-ROOM 112	2P20A	>	1300				EH-2-ROOM 113	2P20A	2
		4, 4, 20 MM		1300	<<<	<<<	<		4, 4, 20 MM	
3			>	>>>	1300					4
					1300	<<<	<			
5	EH-2-ROOM 114	2P20A	>	>>>	>>>	1300		EH-2-ROOM 115	2P20A	6
		4, 4, 20 MM				1300	<		4, 4, 20 MM	
7			>	1300						8
				1300	<<<	<<<	<			
9	EH-2-ROOM 116	2P20A	>	>>>	1300			EH-2-ROOM 100	2P20A	10
		4, 4, 20 MM			1300	<<<	<		4, 4, 20 MM	
11			>	>>>	>>>	1300				12
						1300	<			
13	SPARE	2P20A	>	0				EH-1-ROOM 100	2P20A	14
				0	<<<	<<<	<		4, 4, 20 MM	
15			>	>>>	0					16
					0	<<<	<			
17	SPARE	2P20A	>	>>>	>>>	0		EF-1,EF-2,SF-1 ROOM	1P20A	18
						720	<	101	4, 4, 20 MM	
19			>	0				SPARE	1P20A	20
				0	<<<	<<<	<			
21	SPARE	2P20A	>	>>>	0			SPARE	2P20A	22
					0	<<<	<			
23			>	>>>	>>>	0				24
						0	<			
25	SPARE	1P20A	>	0				SPARE	1P20A	26
				0	<<<	<<<	<			
27	SPARE	1P20A	>	>>>	0			SPARE	1P20A	28
					0	<<<	<			
29	SPARE	1P20A	>	>>>	>>>	0		SPARE	1P20A	30
						0	<			
31	SPARE	1P20A	>	0				SPARE	1P20A	32
				0	<<<	<<<	<			
33	SPARE	1P20A	>	>>>	0			SPARE	1P20A	34
					0	<<<	<			
35	SPARE	1P20A	>	>>>	>>>	0		SPARE	1P20A	36
						0	<			
37	SPACE		>	0				SPACE		38
				0	<<<	<<<	<			
39	SPACE		>	>>>	0			SPACE		40
					0	<<<	<			
41	SPACE		>	>>>	>>>	0		SPACE		42
						0	<			

CONNECTED LOAD--WATTS	5,200	5,200	5,920	ELCB, 15mA, 50 mS = ±
DIVERSIFIED LOAD--VA @ A.D.F.		15		Applied Diversity Factor = 90%
GROWTH ALLOWANCE (25 %)--VA		4		(LTG=100%; AIRCON=90%; KITCHEN=50%
MIN. DESIGN AMPS, @ 380V		28		SOCKETS=50%; MISC. POWER=50%)

US ARMY CORPS OF ENGINEERS
AFGHANISTAN ENGINEER DISTRICT

Mark	Description	Date	Appr.

Mark	Description	Date	Appr.

Designed by:
Dwn by: Ckd by:
Reviewed by:
Submitted by:
Date: 5/19/10
Rev: 0
Design file no.
Drawing code:
File name: AF1024B-SE604SC
Plot date: 2010/06/08
Plot scale:

U.S. ARMY ENGINEER DISTRICT, AFGHANISTAN
CORPS OF ENGINEERS
APO AE 96338

STANDARD DESIGN
VARIOUS PROJECTS
VARIOUS LOCATIONS, AFGHANISTAN

NCO BARRACK

AF1024B-SE604SC – LAYOUT1
SHEET 3

APPROVED:

A/E DESIGNER OF RECORD

SEAL:

SHEET REFERENCE NUMBER:
B

R:\ENGINEERING\26 STANDARD DESIGNS\A-E STANDARD DESIGNS\NCO BARRACKS\AF1024B-SE604SC.DWG

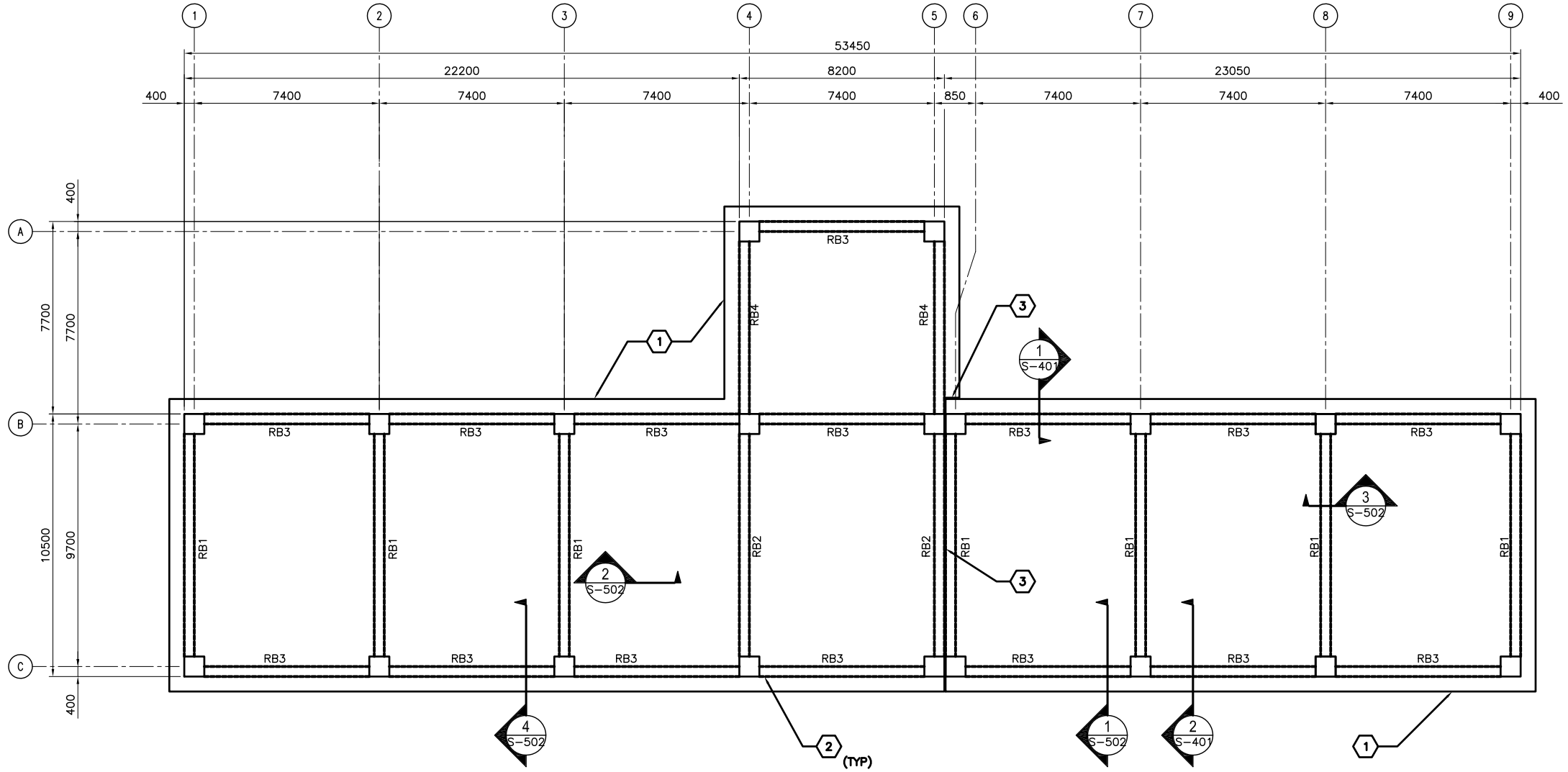

ROOF FRAMING PLAN
SCALE: 1:100

ROOF FRAMING PLAN NOTES:

1. REFER TO SHEETS S-001 FOR STRUCTURAL NOTES AND DESIGN CRITERIA.
2. TOP OF SLAB ELEVATION = 3800 UNLESS NOTED OTHERWISE.
3. ROOF SLAB IS 300 WITH #19@250 OC EW T&B.
4. ROOF BEAM INDICATED BY RB# ON PLAN. REFER TO BEAM SCHEDULE ON SHEET S-601
5. COORDINATE WITH ARCHITECTURAL SHEETS FOR COLD-FORMED STEEL OVERBUILD FRAMING ABOVE ROOF SLAB.
6. COLD-FORMED METAL OVERBUILD ROOF FRAMING NOT SHOWN FOR CLARITY. SEE OVERBUILD ROOF FRAMING DETAILS AND SECTIONS ON SHEET S-702.
7. CMU PARTITION WALLS (BELOW ROOF SLAB) NOT SHOWN FOR CLARITY.
8. OVERHANG AREAS OF ROOF SLAB CONTAIN ROOF VENT PENETRATIONS. REFERENCE ARCHITECTURAL DRAWINGS FOR INFORMATION.
9. DISCONTINUE ALL ROOF FRAMING AT BUILDING EXPANSION JOINT. REFER TO ARCHITECTURAL SHEETS FOR COLD-FORMED ROOF OVERBUILD FRAMING EXPANSION JOINT DETAIL.

ROOF FRAMING PLAN KEY NOTES: (X)

1. CONC ROOF SLAB (BELOW ROOF OVERBUILD)
2. REINF CONC COLUMN (BELOW CONC ROOF SLAB)
3. 50 ISOLATION JOINT BETWEEN STRUCTURES LOCATED ABOVE FIRST FLOOR SLAB-ON-GRADE

1 0 1 2 3 4 5 6 7 8 9
1:100

UNLESS NOTED OTHERWISE, LINEAR DIMENSIONS SHOWN ARE IN MILLIMETERS.

APPROVED:

A/E DESIGNER OF RECORD

SEAL:

US ARMY CORPS OF ENGINEERS
AFGHANISTAN ENGINEER DISTRICT

Mark	Description	Date	Appr.	Mark	Description	Date	Appr.

Designed by:
Dwn by: Ckd by:
Reviewed by:
Submitted by:
Date: 5/19/10 Rev: 0
Design file no.
Drawing code:
File name: AF1024B-SF1102PN
Plot date: 2010/06/08
Plot scale:

U.S. ARMY ENGINEER DISTRICT, AFGHANISTAN
CORPS OF ENGINEERS
APO AE 96338

STANDARD DESIGN
VARIOUS PROJECTS
VARIOUS LOCATIONS, AFGHANISTAN

NCO BARRACKS

ROOF FRAMING PLAN

SHEET REFERENCE NUMBER:
B
S-102

R:\ENGINEERING\26 STANDARD DESIGNS\A-E STANDARD DESIGNS\NCO BARRACKS\AF1024B-SF1102PN.DWG

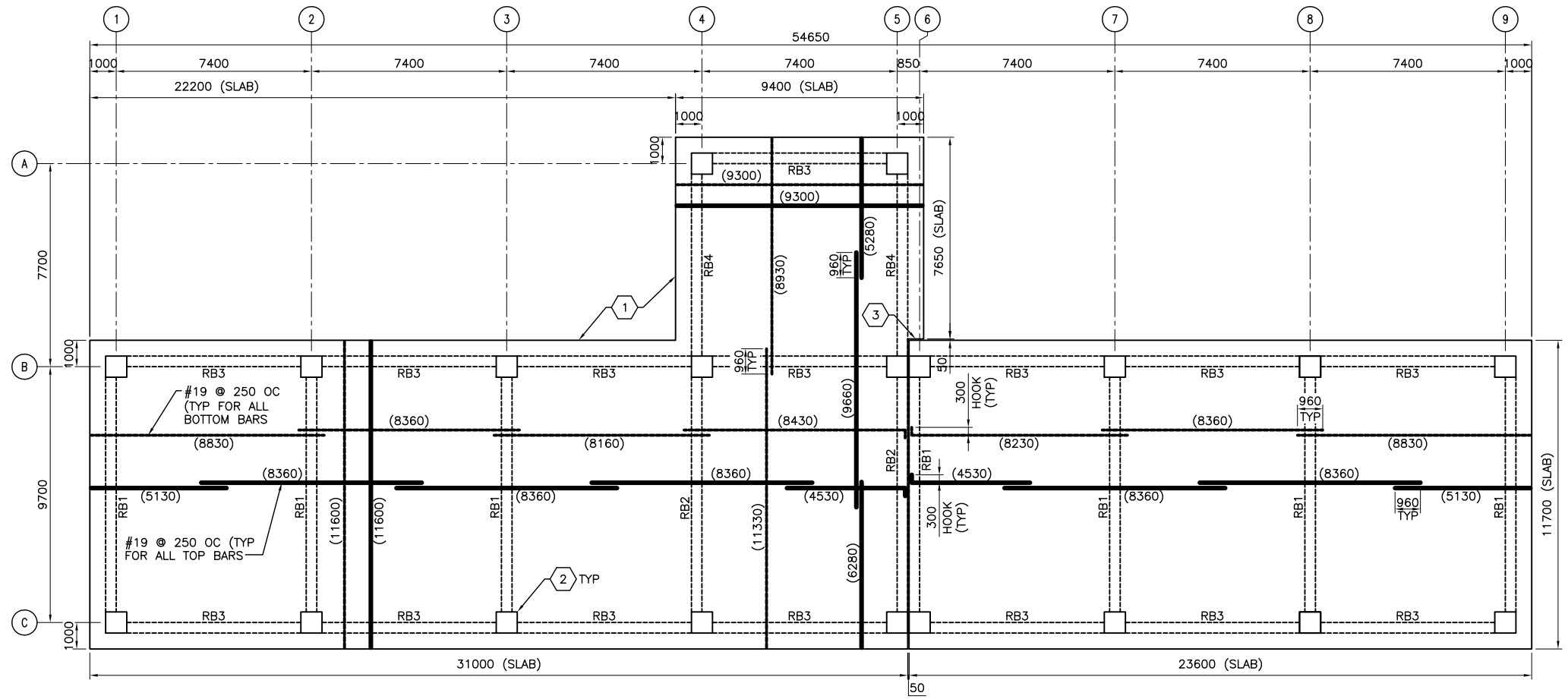

ROOF FRAMING PLAN
SCALE: 1:100

ROOF FRAMING PLAN NOTES:

1. REBAR DETAIL AND PLACEMENT DRAWINGS (800 SERIES) ARE PROVIDED FOR INFORMATION ONLY. REBAR PLACEMENT AND DETAIL DRAWINGS SHALL BE CHECKED AND VALIDATED BY CONSTRUCTION CONTRACTOR.
2. ROOF SLAB REINFORCING BAR LENGTH IS NOTED THUS (6600).
3. SLAB REBAR COVER AT T&B IS 25mm, 50mm AT EDGES. REFER TO DETAIL 7/S–803.
4. OMIT SLAB REINFORCING PARALLEL TO BEAMS WITHIN BEAM LIMITS.
5. ROOF BEAM INDICATED BY RB# ON PLAN. REFER TO BEAM ELEVATIONS ON SHEET S–804, S–805, S–806 AND S–807.

ROOF FRAMING PLAN KEY NOTES: (X)

1. CONC ROOF SLAB.
2. REINF CONC COLUMN (BELOW CONC ROOF SLAB) (SEE SHEET S–803)
3. EXPANSION JOINT IN ROOF SLAB

ROOF FRAMING PLAN LEGEND:

SLAB REINFORCING BOTTOM BARS
SLAB REINFORCING TOP BARS

1 0 1 2 3 4 5 6 7 8 9
1:100

UNLESS NOTED OTHERWISE, LINEAR DIMENSIONS SHOWN ARE IN MILLIMETERS.

US ARMY CORPS OF ENGINEERS
AFGHANISTAN ENGINEER DISTRICT

Mark	Description	Date	Appr.	Mark	Description	Date	Appr.

Designed by: Date: 5/19/10 Rev: 0
Dwn by: Ckd by: Design file no.
Drawing code:
Reviewed by: File name: AF10248-SF802PN
Plot date: 2010/06/06
Submitted by: Plot scale:

U.S. ARMY ENGINEER DISTRICT, AFGHANISTAN
CORPS OF ENGINEERS
APO AE 96338

STANDARD DESIGN
VARIOUS PROJECTS
VARIOUS LOCATIONS, AFGHANISTAN

NCO BARRACKS

REBAR REINFORCEMENT DRAWINGS
ROOF FRAMING PLAN

SHEET REFERENCE NUMBER:
B
S–802

R:\ENGINEERING\26 STANDARD DESIGNS\A-E STANDARD DESIGNS\NCO BARRACKS\AF10248-SF802PN.DWG

STRUCTURAL ABBREVIATIONS:

ACI	AMERICAN CONCRETE INSTITUTE
ADD'L	ADDITIONAL
AISC	AMERICAN INSTITUTE OF STEEL CONSTRUCTION
AISI	AMERICAN IRON AND STEEL INSTITUTE
ASTM	AMERICAN SOCIETY FOR TESTING AND MATERIALS
ARCH	ARCHITECTURAL
B	BOTTOM
BLDG	BUILDING
BOTT	BOTTOM
℄	CENTER LINE
CFMRF	COLD FORM METAL ROOF FRAME
CFMF	COLD FORM METAL FRAME
CFS	COLD FORMED STEEL
CIP	CAST-IN-PLACE
CIPL	CAST-IN-PLACE LINTEL
CJ	CONTROL JOINT
CLR	CLEAR
CMU	CONCRETE MASONRY UNIT
COEFF	COEFFICIENT
COL	COLUMN
CONC	CONCRETE
CONT	CONTINUOUS
COORD	COORDINATE
CRSI	CONCRETE REINFORCING STEEL INSTITUTE
CSJ	CONSTRUCTION JOINT
DIA	DIAMETER
DIAG	DIAGONAL
DIM	DIMENSION
DWG	DRAWING
DWL	DOWEL
EA	EACH
EF	EACH FACE
ELEC	ELECTRICAL
ELEV	ELEVATION
EMBED	EMBEDMENT
EQUIV	EQUIVALENT
ETC	ET CETERA
EW	EACH WAY
EXP	EXPANSION
EXT	EXTERIOR
FTG	FOOTING
GA	GAUGE
GB	GRADE BEAM
HORIZ	HORIZONTAL
h	HOUR
HRS	HOURS
IBC	INTERNATIONAL BUILDING CODE
INFO	INFORMATION
INT	INTERIOR
kg	KILOGRAM
km	KILOMETER
kN	KILONEWTON
kPa	KILOPASCAL
L#	ANGLE (# INDICATES SIZE)
LONG	LONGITUDINAL
LLV	LONG LEG VERTICAL
m	METER
MAX	MAXIMUM
MECH	MECHANICAL
MFG	MANUFACTURER
MID	MIDDLE
MIN	MINIMUM
MISC	MISCELLANEOUS
mm	MILLIMETER
MPa	MEGAPASCAL
MTL	METAL
MWFRS	MAIN WIND FORCE RESISTING SYSTEM
N	NEWTON
N	NORTH
N/A	NOT APPLICABLE
#	NUMBER SYMBOL FOR REBAR SIZE
NTS	NOT TO SCALE
OC	ON CENTER
OPNG	OPENING
ℙ or PL	PLATE
PRE-ENG	PRE-ENGINEERED
RB	ROOF BEAM
REINF	REINFORCED
REQ'D	REQUIRED
SIM	SIMILAR
SPECS	SPECIFICATIONS
STD	STANDARD
STRUCT	STRUCTURAL
SW	SHEAR WALL
T	TOP
T/	TOP OF
T/ELEV	TOP ELEVATION
T/SLAB	TOP OF SLAB
T&B	TOP AND BOTTOM
THK	THICK
TYP	TYPICAL
UFC	UNIFIED FACILITIES CRITERIA
UON	UNLESS OTHERWISE NOTED
VERT	VERTICAL
W	WIDTH
W/	WITH

1.0 GENERAL NOTES:

1.1 THIS PROJECT HAS BEEN DESIGNED FOR THE WEIGHTS AND MATERIALS INDICATED ON THE SHEETS AND FOR THE LIVE LOADS INDICATED IN THE DESIGN DATA. IT IS THE CONTRACTOR'S RESPONSIBILITY TO DETERMINE ALLOWABLE CONSTRUCTION LOADS AND TO PROVIDE PROPER DESIGN AND CONSTRUCTION OF FALSEWORK, FORMWORK, STAGING, BRACING, SHEETING AND SHORING, ETC.

1.1 COORDINATE THESE SHEETS WITH THE ARCHITECTURAL, MECHANICAL, ELECTRICAL, PLUMBING, AND CIVIL SHEETS. ALL DIMENSIONS SHOWN ON THE SHEETS ARE MILLIMETERS UNLESS NOTED OTHERWISE.

1.2 THE CONTRACTOR SHALL VERIFY AND COORDINATE ALL FLOOR AND ROOF OPENING SIZES AND LOCATIONS, EQUIPMENT PAD SIZES AND LOCATIONS, ANCHOR BOLT LAYOUTS, ETC WITH EQUIPMENT SELECTED. THE CONTRACTOR SHALL MAKE ANY REQUIRED MODIFICATIONS AT NO ADDITIONAL COST.

1.3 THE CONTRACTOR SHALL REFER TO THE ARCHITECTURAL, MECHANICAL, ELECTRICAL AND PLUMBING SHEETS FOR SLEEVES, CURBS, INSERTS OR OPENINGS, ETC. NOT HEREIN INDICATED.

1.4 WORK NOT INCLUDED ON THE SHEETS BUT IMPLIED TO BE SIMILAR TO THAT SHOWN AT CORRESPONDING PLACES ELSEWHERE ON THE SHEETS SHALL BE REPEATED.

1.5 IN CASE OF CONFLICT BETWEEN THE NOTES, DETAILS AND SPECIFICATIONS THE MOST RIGID REQUIREMENTS SHALL GOVERN.

1.6 SEE ARCHITECTURAL SHEETS FOR LOCATIONS OF MASONRY AND NON-LOAD BEARING PARTITIONS. PROVIDE COMPRESSIBLE FIRESAFING AT TOP OF WALL AS REQUIRED BY ARCHITECTURAL SHEETS.

1.7 COORDINATE FINISHED FLOOR DATUM ELEVATION 0.0m WITH THE CIVIL SHEETS.

2.0 FOUNDATION NOTES

2.1 THE GEOTECHNICAL ANALYSIS FOR THIS PROJECT IS THE RESPONSIBILITY OF THE CONTRACTOR AWARDED THE WORK. AN ASSUMED ALLOWABLE SOIL BEARING VALUE OF 72 kPa HAS BEEN USED IN THE STRUCTURAL ANALYSIS OF THE BUILDING HEREIN AND SHALL BE CONFIRMED AND VERIFIED AS PART OF THE GEOTECHNICAL INVESTIGATION. VALUES WHICH DO NOT MEET THE REQUIREMENTS INDICATED ON THE BASIS OF DESIGN SHEET SHALL BE IMMEDIATELY BROUGHT TO THE ATTENTION OF THE CONTRACTING OFFICER FOR CONSIDERATION AND DETERMINATION ON THE NEXT APPROPRIATE COURSE OF ACTION.

2.2 SEE THE SPECIFICATION FOR ADDITIONAL REQUIREMENTS TO THOSE OUTLINED IN THE GEOTECHNICAL INVESTIGATION FOR EXCAVATION AND PREPARATION OF THE FOUNDATION AND THE SLAB ON GRADE SUBGRADE INCLUDING COMPACTION PROCEDURES.

2.3 EXCAVATIONS FOR FOOTINGS SHALL HAVE THE SIDES AND BOTTOMS TEMPORARILY LINED WITH 0.25mm POLYETHYLENE IF PLACEMENT OF CONCRETE DOES NOT OCCUR WITHIN 24 HRS OF THE EXCAVATION OF THE FOOTING.

2.4 FOUNDATION CONDITIONS NOTED DURING CONSTRUCTION WHICH DIFFER FROM THOSE DESCRIBED IN THE GEOTECHNICAL REPORT SHALL BE REPORTED TO THE GENERAL CONTRACTOR BEFORE FURTHER CONSTRUCTION IS ATTEMPTED. SEE PROJECT SPECIFICATIONS.

2.5 NO FOOTINGS OR SLABS SHALL BE POURED INTO OR AGAINST SUBGRADE CONTAINING FREE WATER, FROST, ICE OR LOOSE MATERIAL. FROST DEPTH ASSUMED TO BE 800mm.

2.6 ALL SLAB-ON-GRADE, TRENCH BOTTOMS AND OTHER ON-GRADE INTERIOR HORIZONTAL SURFACES SHALL BE PLACED OVER A 0.25mm POLYETHYLENE VAPOR RETARDER OVER A 100mm CAPILLARY WATER BARRIER PLACED ON SUBGRADE PROPERLY PREPARED IN ACCORDANCE WITH THE CONTRACT SPECIFICATIONS. (UON)

2.7 PRIOR TO START OF FOUNDATION OR SLAB-ON-GRADE CONSTRUCTION, EXISTING SUBGRADES SHALL BE COMPACTED TO MINIMUM OF 95% MAXIMUM DRY DENSITY OBTAINED THRU ASTM D 1557 MODIFIED PROCTOR TESTING.

2.8 SEE PLUMBING, ELECTRICAL & CIVIL SHEETS FOR REQUIRED UNDERSLAB UTILITIES.

2.9 SEE ARCHITECTURAL SHEETS FOR ALL WATERPROOFING DETAILS AND MATERIALS.

2.10 IF UNDERMINING OF FOOTINGS OCCURS, FILL VOIDS WITH 18 MPa CONCRETE. DO NOT ATTEMPT TO REPLACE AND RE-COMPACT SOIL.

3.0 CONCRETE

3.1 CONCRETE SHALL BE NORMAL WEIGHT CONCRETE WITH A MINIMUM COMPRESSIVE STRENGTH (f'c) OF 28 MPa AT 28 DAYS. ALL CONCRETE SHALL HAVE A WATER-CEMENT RATIO OF 0.45. SEE SPECIFICATIONS FOR ADDITIONAL INFORMATION. ENTRAIN AIR TO PRODUCE TOTAL AIR CONTENT ACCORDING TO THE SPECIFICATIONS FOR CONCRETE EXPOSED TO FREEZING TEMPERATURES (EXTERIOR FOOTINGS, SLAB TURNDOWNS, EXTERIOR SLABS AND SLABS-ON-GRADE, EXTERIOR RETAINING WALLS, AND EXTERIOR GRADE BEAMS.)

3.2 NO CALCIUM CHLORIDE SHALL BE USED IN ANY CONCRETE.

3.3 MIXING, TRANSPORTING AND PLACING OF CONCRETE SHALL CONFORM TO ACI 301M-05.

3.4 ALL CONCRETE WORK SHALL CONFORM TO THE REQUIREMENTS OF THE AMERICAN CONCRETE INSTITUTE (ACI) 318M MANUAL (metric), "BUILDING CODE REQUIREMENTS FOR REINFORCED CONCRETE", AND REQUIREMENTS OUTLINED IN THE CONTRACT SPECIFICATIONS. WHEN THERE IS A CONFLICT BETWEEN ACI AND THE SPECIFICATIONS, THE MORE STRINGENT SHALL GOVERN.

3.5 CHAMFER ALL EXPOSED EXTERNAL CORNERS OF CONCRETE WITH 20mm x45 DEGREE CHAMFER UON.

3.6 CONCRETE REINFORCEMENT BARS SHALL CONFORM TO ASTM A615M-96a, GRADE 420 MPa, REINFORCING BARS SHALL NOT BE TACK WELDED, WELDED, HEATED OR CUT, UNLESS INDICATED ON THE CONTRACT DOCUMENTS. ALL LAP SPLICES SHALL BE CLASS "B" UON.

3.7 HORIZONTAL FOOTING AND HORIZONTAL WALL REINFORCEMENT SHALL BE CONTINUOUS AND SHALL HAVE 90 DEGREE BENDS AND EXTENSIONS, OR CORNER BARS OF EQUIVALENT SIZE LAPPED WITH A CLASS B TENSION SPLICE AT CORNERS AND INTERSECTIONS. TOP BAR CRITERIA SHALL APPLY IF 300mm OR MORE OF FRESH CONCRETE IS PLACED BELOW BAR.

3.8 SLABS-ON-GRADE SHALL HAVE CONSTRUCTION JOINTS OR CRACK CONTROL JOINTS AS SHOWN ON THE DRAWINGS. CONSTRUCTION JOINTS CAN BE USED AT CONTROL JOINT LOCATIONS AT CONTRACTORS OPTION. SEE SLAB PLANS & JOINT DETAILS FOR ADDITIONAL INFORMATION. FOR AREAS NOT SHOWN ON DWGS, THE MAXIMUM SPACING OF CONSTRUCTION/ CRACK CONTROL JOINTS SHALL BE 4800mm

3.9 ALL CONCRETE REINFORCEMENT SHALL BE DETAILED, FABRICATED, LABELED, SUPPORTED, AND SPACED IN FORMS AND SECURED IN PLACE IN ACCORDANCE WITH THE PROCEDURES AND REQUIREMENTS OUTLINED IN THE LATEST EDITION OF THE "BUILDING CODE REQUIREMENTS FOR REINFORCED CONCRETE", ACI 318M, AND THE "MANUAL OF STANDARD PRACTICE FOR DETAILING REINFORCED CONCRETE STRUCTURES", ACI 315M, LATEST EDITION. BASED ON IN COUNTRY REINFORCEMENT AVAILABILITY, IT IS THE CONTRACTOR'S OPTION TO ROUND DESIGNATED ODD NUMBERED REINFORCEMENT SIZES UP (1) ONE BAR SIZE.

3.10 ALL DOWELS SHALL MATCH SIZE AND NUMBER OF MAIN REINFORCING, UNLESS NOTED OTHERWISE ON THE SHEETS.

3.11 ADDITIONAL BARS SHALL BE PROVIDED AROUND ALL FLOOR AND WALL OPENINGS AS SHOWN ON THE SHEETS.

3.12 SEE ARCHITECTURAL SHEETS FOR TYPE AND LOCATION OF ALL FLOOR FINISHES.

3.13 THE CONTRACTOR SHALL COORDINATE ADDITIONAL WALL/SLAB OPENINGS NOT SHOWN ON STRUCTURAL SHEETS. SEE MECHANICAL, ELECTRICAL, PLUMBING AND CIVIL SHEETS.

3.14 UNLESS NOTED OTHERWISE, ALL CURBS SHALL BE REINFORCED WITH AT LEAST (1)-#13 CONTINUOUS AND #13 AT 300mm O.C. DOWELS TO STRUCTURE BELOW.

3.15 THE CONTRACTOR SHALL VERIFY ALL OPENINGS, PAD SIZES, AND ANCHOR BOLTS WITH EQUIPMENT SELECTED.

3.16 FOR ALL WALLS & PIERS, PROVIDE DOWELS INTO FOOTING AT EACH VERT REINF BAR, UON DOWEL SIZE SHALL BE SAME AS VERT REINF.

3.17 PROVIDE CONCRETE POUR STOPS OR FORMED AS REQUIRED FOR INSTALLATION OF ALL CONCRETE WORK.

3.18 PROVIDE ADDITIONAL (2)-#13 x 600mm REINFORCING BARS IN SLAB-ON GRADE AT ALL RE-ENTRANT CORNERS. PLACE BARS AT MID-DEPTH OF SLAB WITH A CLEARANCE OF 50mm FROM CORNER UON.

3.19 COLD-WEATHER PLACEMENT: COMPLY WITH ACI 306.1 AND AS FOLLOWS. PROTECT CONCRETE WORK FROM PHYSICAL DAMAGE OR REDUCED STRENGTH THAT COULD BE CAUSED BY FROST, FREEZING ACTIONS, OR LOW TEMPERATURES. SUBMIT A COLD WEATHER CONCRETING PLAN FOR APPROVAL.

3.20 PROVIDE BONDING COMPOUND PER ASTM C 1059-99: SPECIFICATION FOR LATEX AGENTS FOR BONDING FRESH CONCRETE (GROUT) TO HARDENED CONCRETE.

3.21 THE FORMED SURFACES FOR REINFORCED CONCRETE SHALL ACHIEVE A "CLASS A" FINISH WHEN RECEIVING PAINT OR A "CLASS B" FINISH WHEN RECEIVING PLASTER OR TILE AS PER SPECIFICATION SECTION 03 31 00 CAST-IN-PLACE STRUCTURAL CONCRETE.

3.22 AT INTERSECTING GRADE BEAMS AND SHEAR WALLS, PROVIDE CORNER BARS AT INTERSECTIONS WITH SAME QUANTITY, SIZE AND SPACING AS HORIZONTAL BARS WITH LEG LENGTH = 50db.

3.23 REFER TO S-800 SERIES REINFORCING BAR PLACEMENT DRAWINGS DEFINING LENGTHS, BENDS, AND SPACINGS FOR ALL STRUCTURAL CONCRETE. THE S-800 SERIES DRAWING ARE BASED ON THE S-400, S-500, S-600, AND S-700 SERIES DRAWING SCHEDULES, DETAILS, AND DIAGRAMS.

4.0 CONCRETE MASONRY

4.1 MASONRY CONSTRUCTION SHALL CONFORM TO SPECIFICATION FOR MASONRY STRUCTURES (ACI 530.1) UON.

4.2 STRENGTH OF MASONRY MATERIALS SHALL BE AS FOLLOWS:

a. CONCRETE MASONRY UNITS SHALL BE NORMAL WEIGHT, GRADE N, TYPE 1, CONFORMING TO ASTM C-90 AND HAVE A MINIMUM COMPRESSIVE STRENGTH OF 10.4 MPa ON THE NET AREA.
b. MORTAR SHALL CONFORM TO ASTM C-270 TYPE S.
c. GROUT FOR MASONRY SHALL BE NORMAL WEIGHT AND HAVE A MINIMUM COMPRESSIVE STRENGTH OF 14 MPa AT 28 DAYS. GROUT SHALL CONFORM TO ASTM C476M. GROUT LIFTS SHALL NOT EXCEED 1,400mm.
d. REINFORCED MASONRY SHALL HAVE A STRENGTH F'm = 10 MPa. (F'm IS THE COMPRESSIVE STRENGTH OF THE MASONRY AT 28 DAYS AS DETERMINED BY PRISM TESTS).

4.3 ALL VERTICAL REINFORCEMENT FOR CONCRETE MASONRY SHALL BE ASTM A615M, GRADE 420 MPa. ALL SPLICES SHALL BE LAPPED 48 BAR DIAMETERS MINIMUM.

4.4 BOND BEAMS SHALL BE SPACED AT 1200mm OC VERTICALLY. BOND BEAM REINFORCING SHALL BE CONTINUOUS AND PROVIDED AT WALL INTERSECTIONS AND WALL CORNERS (REFERENCE CONCRETE MASONRY NOTE 4.11). ALL BOND BEAM REINFORCING SHALL BE CONTINUOUS AND HAVE STANDARD ACI HOOKS AT EACH END. PROVIDE STANDARD BAR SPLICES AS SPECIFIED. PROVIDE CAST-IN-PLACE CONCRETE BOND BEAMS WITH (2)-#16.

4.5 SEE TYPICAL DETAILS FOR MINIMUM REINFORCEMENT REQUIREMENTS FOR CMU WALLS. PROVIDE STANDARD BAR SPLICES AS SPECIFIED. ALL VERTICAL REINFORCEMENT EXTENDS FULL HEIGHT OF WALL.

4.6 CMU CELLS THAT REQUIRE VERTICAL REINFORCING BARS AS INDICATED ON THE CONTRACT DRAWINGS AND/OR SPECS SHALL HAVE REINF BARS PLACED IN CENTERS OF CMU CELLS AND CONTINUOUSLY GROUTED UON.

4.7 ALL CMU CELLS, OPEN CAVITIES, AND AIR SPACES OF ALL EXTERIOR WALLS SHALL BE GROUTED TO STOP FRAGMENTS FROM MORTAR BLAST.

4.8 CONTRACTOR SHALL COORDINATE LOCATION OF ALL OPENINGS SEE ARCH, MECH, ELEC, AND PLUMBING SHEETS FOR SIZE AND LOCATION OF OPENINGS.

4.9 MASONRY WALLS SHALL NOT BE BACK FILLED PRIOR TO THE MORTAR AND GROUT ATTAINING THEIR RESPECTIVE MAXIMUM DESIGN STRENGTHS PER SPECIFICATIONS.

4.10 PROVIDE GALVANIZED MORTAR/GROUT SCREEN W/ 3mm MESH WHERE CELLS BELOW ARE NOT GROUTED.

4.11 AT INTERSECTING BOND BEAMS, PROVIDE CORNER BAR FOR EACH HORIZONTAL BAR IN BOND BEAMS AT INTERSECTING WALLS. USE SAME SIZE AND SPACING AS HORIZONTAL BARS WITH LEG LENGTH = 50db.

5.0 COLD-FORMED METAL FRAMING

5.1 ALL COLD-FORMED METAL FRAMING MEMBERS SHALL CONFORM TO ASTM A1003M, STRUCTURAL GRADE ST340 (MPa), WITH A GALVANIZED COATING OF Z275 OR BETTER IN ACCORDANCE WITH ASTM A653M.

5.2 ALL COLD-FORMED METAL FRAMING MEMBERS SHALL HAVE THE FOLLOWING MINIMUM PROPERTIES:

a. MINIMUM METAL THICKNESS:
TRACK = 1.37mm;
STUD/OTHER = 1.09mm
b. MINIMUM FLANGE WIDTH:
TRACK = 38mm;
STUD/OTHER = 35mm
c. MINIMUM MEMBER DEPTH:
ALL SECTIONS = 152.2mm
d. PURLIN (HAT CHANNEL)
DEPTHxWIDTH(FLAT TOP)xTHICK = 25mmx42mmx1.59mm

5.3 ALL CONNECTIONS SHALL BE MADE WITH CORROSION RESISTANT (ASTM A153M), SELF-DRILLING, SELF-TAPPING STEEL DRILL SCREWS IN ACCORDANCE WITH ASTM C1513. SCREWS SHALL HAVE A LOW PROFILE HEAD BENEATH ROOF DECK, AND STANDARD HEAD ALL OTHER LOCATIONS.

5.4 FABRICATE COLD FORMED METAL FRAMING AND ACCESSORIES PLUMB, SQUARE AND TRUE TO LINE, WITH CONNECTIONS SECURELY FASTENED ACCORDING TO AISI STANDARD FOR COLD FORMED STEEL FRAMING.

5.5 CUT FRAMING MEMBERS BY SAWING OR SHEATHING, DO NOT TORCH CUT.

5.6 INSTALL FRAMING MEMBERS IN ONE-PIECE LENGTHS UNLESS SPLICE CONNECTIONS ARE INDICATED FOR TRACK OR TENSION MEMBERS

5.7 INSTALL TEMPORARY BRACING AND SUPPORTS TO SECURE FRAMING DURING CONSTRUCTION. MAINTAIN BRACING AND SUPPORTS IN PLACE UNTIL THE STRUCTURE HAS BEEN COMPLETED WITH ALL CONNECTIONS AND PERMANENT BRACING SECURED.

6.0 STRUCTURAL DESIGN CRITERIA

6.1 ALL DESIGNS SHALL CONFORM TO THE PROVISIONS OF THE IBC 2006 AND UFC AS APPLICABLE.

6.2 DESIGN LOADS

6.2.1 DEAD LOADS (PER IBC 2006 & UFC 3-310-01)

MECH/ELEC/PLUMBING	0.20 kPa
MISCELLANEOUS	0.15 kPa
COLD-FORMED FRAMING	0.20 kPa
INSULATION	0.10 kPa
METAL ROOF PANEL	0.14 kPa
	0.79 kPa
FLOOR PARTITION ALLOWANCE	0.96 kPa

6.2.2 LIVE LOADS (PER IBC 2006 & UFC 3-310-01)

ROOF	1.00 kPa
CORRIDOR (2-STORY BLDG ONLY)	4.80 kPa
ALL OTHERS (2-STORY BLDG ONLY)	2.40 kPa
SLAB ON GRADE	4.80 kPa

6.2.3 SNOW LOADS (PER IBC 2006 & UFC 3-310-01)

GROUND SNOW LOAD (Pg)	1.2 kPa
SNOW IMPORTANCE FACTOR (I)	1.0
SNOW EXPOSURE FACTOR (Ce)	1.0
THERMAL FACTOR (Ct)	1.0

6.2.4 WIND LOADS (PER IBC 2006)

BASIC WIND SPEED	137 km/h
WIND IMPORTANCE FACTOR	1.0
WIND EXPOSURE CATEGORY	D
DIRECTIONALITY COEFFICIENT (Kd)	0.85
TOPOGRAPHIC FACTOR (Kzt)	1.0

6.2.5 SEISMIC LOADS (PER IBC 2006 & UFC 3-310-04)

OCCUPANCY USE CATEGORY	II
SEISMIC IMPORTANCE FACTOR (Ie)	1.0
SEISMIC SITE CLASS	D

S_s = 2.40 (FOR IRREGULAR PORTION OF BUILDING – COLUMN LINES 1-5)
S_s = 1.50 (REDUCED FROM 2.40 PER ASCE 7-05, 12.8.1.3. FOR A BUILDING WITHOUT IRREGULARITIES – COLUMN LINES 6-9.)
S_1 = 1.20
S_{DS} = 1.00 WHEN S_s = 1.5
S_{DS} = 1.60 WHEN S_s = 2.4
S_{D1} = 1.20

SEISMIC DESIGN CATEGORY	E
SEISMIC RESISTING SYSTEM: –SPECIAL REINFORCED CONCRETE SHEAR WALL	
RESPONSE MODIFICATION FACTOR (R)	6
RESPONSE COEFFICIENT (Cs) – REGULAR PORTION	0.167
RESPONSE COEFFICIENT (Cs) – IRREGULAR PORTION	0.267
SEISMIC ANALYTICAL PROCEDURE =	EQUIV LATERAL FORCE
SEISMIC BASE SHEAR	
REGULAR PORTION = 670 KN	
IRREGULAR PORTION = 1600 KN	

UNLESS NOTED OTHERWISE, LINEAR DIMENSIONS SHOWN ARE IN MILLIMETERS.

APPROVED:

A/E DESIGNER OF RECORD

SEAL:

US ARMY CORPS OF ENGINEERS
AFGHANISTAN ENGINEER DISTRICT

Mark	Description	Date	Appr.	Mark	Description	Date	Appr.

Designed by: Date: 5/19/10 Rev: 0
Dwn by: Ckd by: Design file no.
Reviewed by: Drawing code:
Submitted by: File name: AF1024B-S0001GN Plot date: 2010/06/08 Plot scale:

U.S. ARMY ENGINEER DISTRICT, AFGHANISTAN
CORPS OF ENGINEERS
APO AE 96338

STANDARD DESIGN
VARIOUS PROJECTS
VARIOUS LOCATIONS, AFGHANISTAN

NCO BARRACKS

GENERAL NOTES
AND DESIGN CRITERIA

SHEET REFERENCE NUMBER:
B
S-001

R:\ENGINEERING\26 STANDARD DESIGNS\A-E STANDARD DESIGNS\NCO BARRACKS\AF1024B-S0001GN.DWG

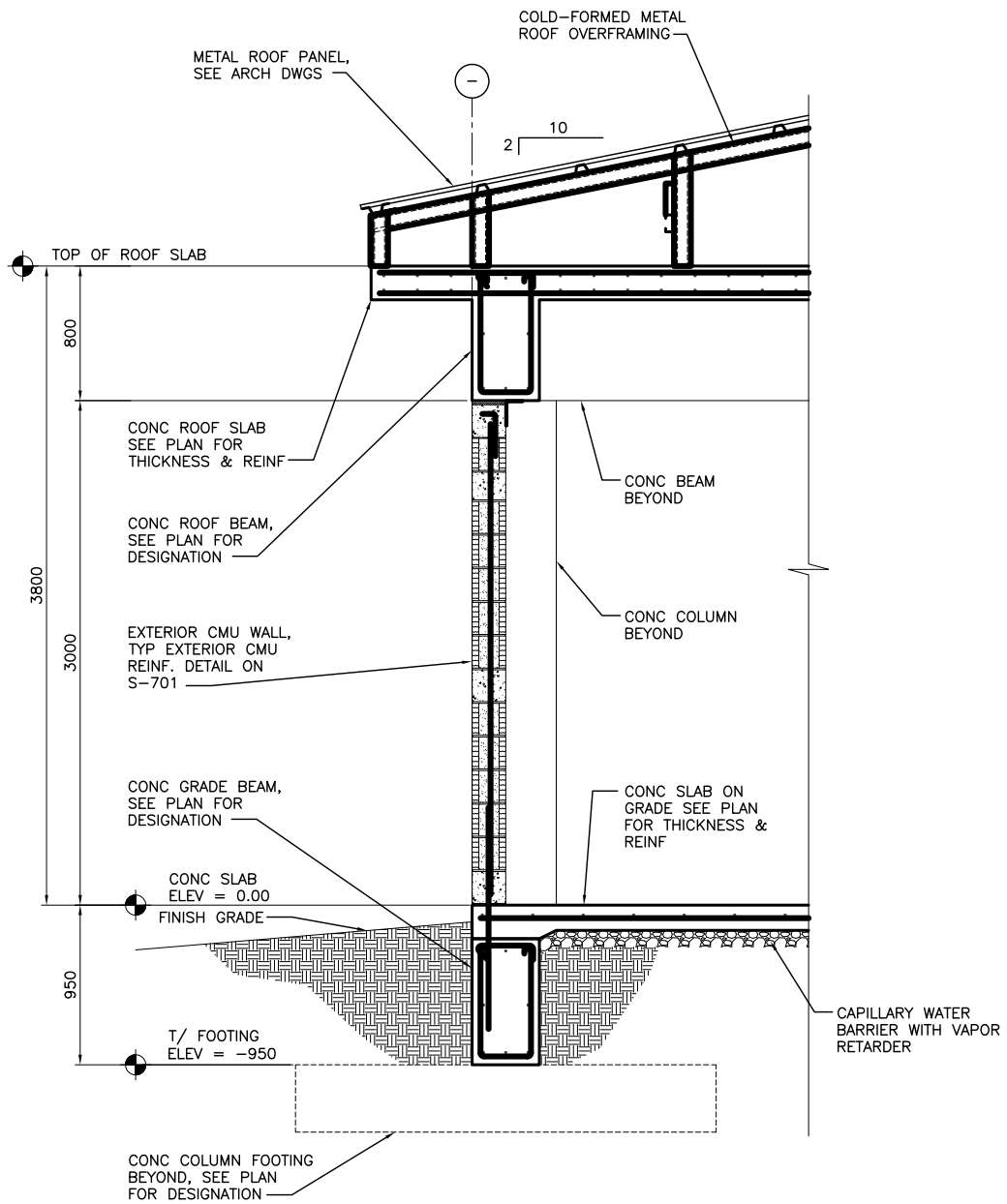

TYPICAL WALL SECTION
AT EXTERIOR MASONRY WALL

SECTION 1 S-101,S-102
SCALE: 1:20

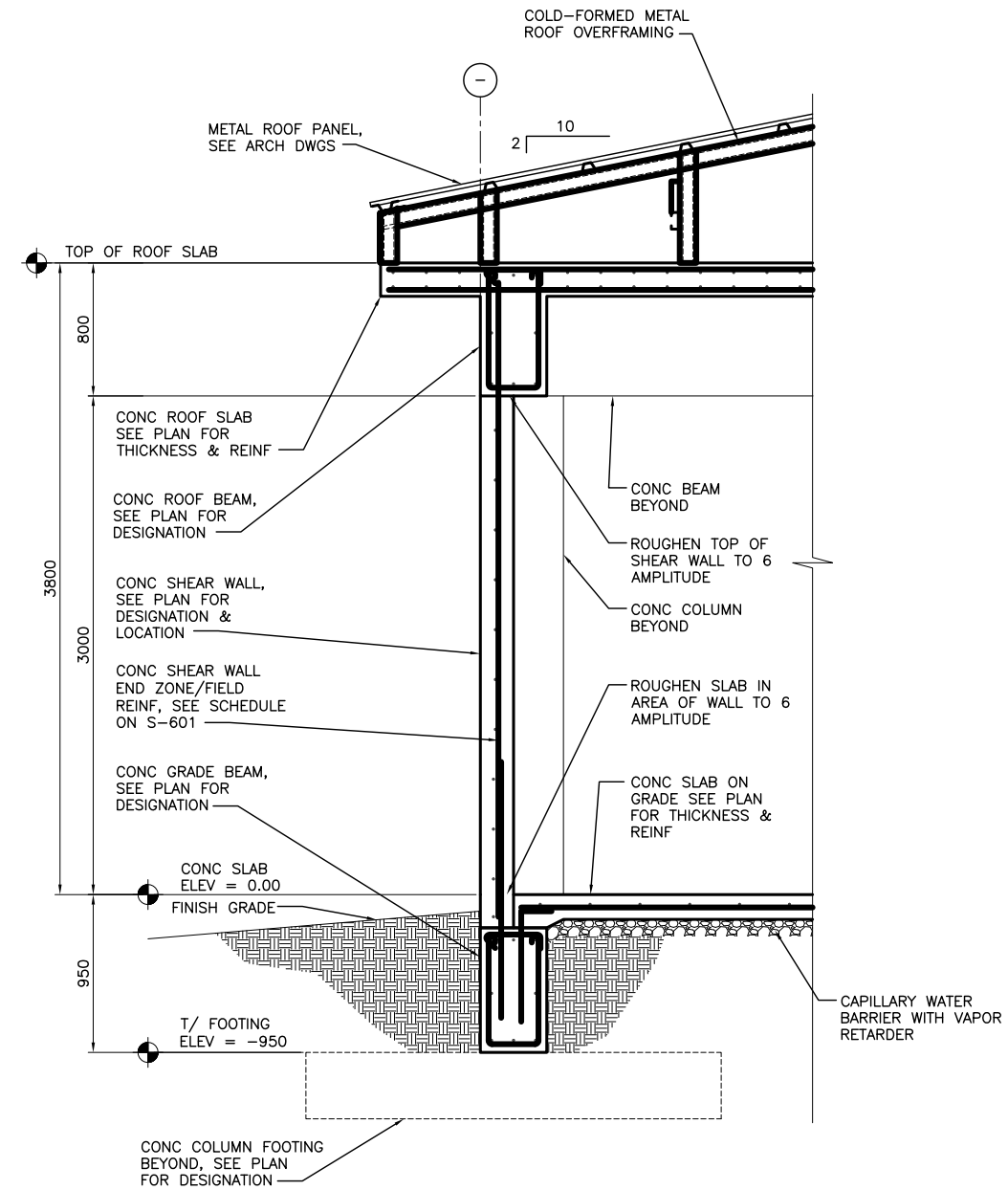

TYPICAL WALL SECTION
AT CONCRETE SHEAR WALL

SECTION 2 S-101,S-102
SCALE: 1:20

1 .50 0 1
1:20

UNLESS NOTED OTHERWISE, LINEAR DIMENSIONS SHOWN ARE IN MILLIMETERS.

APPROVED:

A/E DESIGNER OF RECORD

SEAL:

US ARMY CORPS OF ENGINEERS
AFGHANISTAN ENGINEER DISTRICT

Mark	Description	Date	Appr.	Mark	Description	Date	Appr.

Designed by:
Dwn by: Ckd by:
Date: 5/19/10 Rev: 0
Design file no.
Drawing code:
Reviewed by:
Submitted by:
File name: AF10248-S401SE
Plot date: 2010/06/08
Plot scale:

U.S. ARMY ENGINEER DISTRICT, AFGHANISTAN
CORPS OF ENGINEERS
APO AE 96338

STANDARD DESIGN
VARIOUS PROJECTS
VARIOUS LOCATIONS, AFGHANISTAN

NCO BARRACKS

BUILDING SECTIONS

SHEET REFERENCE NUMBER:
B
S-401

R:\ENGINEERING\26 STANDARD DESIGNS\A-E STANDARD DESIGNS\NCO BARRACKS\AF10248-SS401SE.DWG

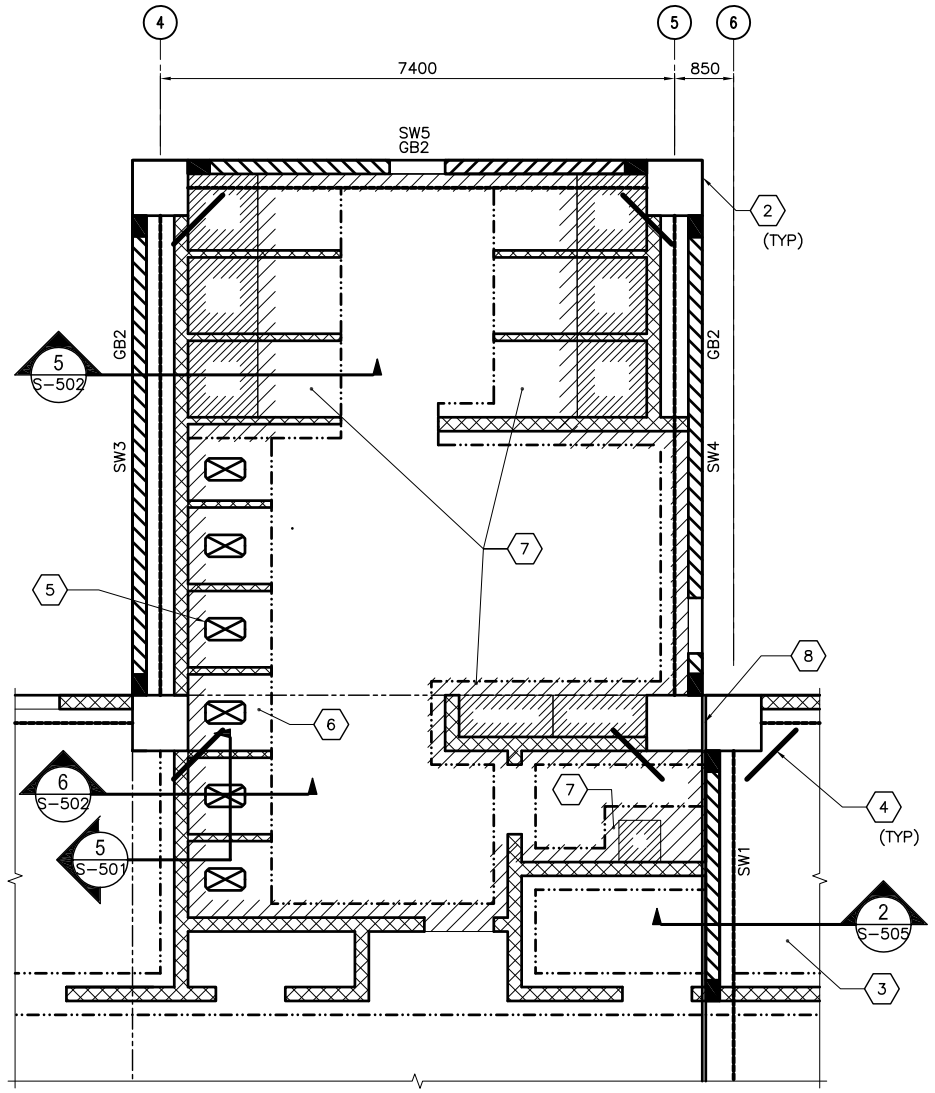

ENLARGED LATRINE SLAB PLAN (1 / S-101)

SCALE: 1:50

ENLARGED PLAN NOTES:

1. REFER TO SHEET S-001 FOR STRUCTURAL NOTES AND DESIGN CRITERIA.
2. FINISH FIRST FLOOR ELEVATION SHALL BE (DATUM 0.00MM) ALL PLUS OR MINUS DIMENSIONS INDICATED ON PLAN OR REFERRED TO IN NOTES RELATE TO FINISH FIRST FLOOR ELEVATION.
3. SLAB-ON-GRADE IS 150 WITH #16 @ 300 OC EW LOCATED 40 FROM T/SLAB UON. WHERE NOTED, 300 SLAB-ON-GRADE SHALL BE REINFORCED W/ #16 @300 OC EW T&B.
4. REFER TO FOUNDATION/SLAB PLAN ON SHEET S-101 FOR COLUMN DESIGNATION AND COLUMN SCHEDULE ON SHEET S-601.
5. REFER TO FOUNDATION/SLAB PLAN ON SHEET S-101 FOR SHEARWALL DESIGNATION AND SHEARWALL SCHEDULE ON SHEET S-601.
6. REFER TO FOUNDATION/SLAB PLAN ON SHEET S-101 FOR GRADE BEAM DESIGNATION AND GRADE BEAM SCHEDULE ON SHEET S-601.
7. SEE TYP EXTERIOR AND INTERIOR CMU WALL REINFORCING DETAILS ON SHEET S-701.

ENLARGED PLAN KEYNOTES: (X)

1. CONC PAD (ENTRANCE) – SEE ARCH DWGS FOR INFORMATION
2. REINF CONC COLUMN
3. REINF CONC SLAB-ON-GRADE
4. (2)-#13 RE-ENTRANT CORNER BARS – SEE S-701 FOR INFORMATION
5. SLAB OPENING – COORDINATE W/ ARCH AND PLUMBING DWGS.
6. 300 SLAB-ON-GRADE
7. 335 SLAB-ON-GRADE
8. 50 ISOLATION JOINT BETWEEN STRUCTURES LOCATED ABOVE FIRST FLOOR SLAB-ON-GRADE

PLAN LEGEND:

- REINF CONC SHEAR WALL
- REINF CMU WALL
- CONTROL JOINT
- INDICATES DROP SLAB 65 BELOW FINISH FLOOR
- INDICATES DROP SLAB 200 BELOW FINISH FLOOR
- SLAB OPENING
- OUTLINE OF THICKENED SLAB AREAS
- GRADE BEAM

1 0 1 2 3 4
1:50

UNLESS NOTED OTHERWISE, LINEAR DIMENSIONS SHOWN ARE IN MILLIMETERS.

APPROVED:

A/E DESIGNER OF RECORD

SEAL:

US ARMY CORPS OF ENGINEERS
AFGHANISTAN ENGINEER DISTRICT

Mark	Description	Date	Appr.	Mark	Description	Date	Appr.

Designed by:
Dwn by: Ckd by:
Reviewed by:
Submitted by:
Date: 5/19/10 Rev: 0
Design file no.
Drawing code:
File name: AF1024B-SS402PN
Plot date: 2010/06/08
Plot scale:

U.S. ARMY ENGINEER DISTRICT, AFGHANISTAN
CORPS OF ENGINEERS
APO AE 96338

STANDARD DESIGN
VARIOUS PROJECTS
VARIOUS LOCATIONS, AFGHANISTAN

NCO BARRACKS

ENLARGED LATRINE SLAB PLAN

SHEET REFERENCE NUMBER:
B
S-402

R:\ENGINEERING\26 STANDARD DESIGNS\A-E STANDARD DESIGNS\NCO BARRACKS\AF1024B-SS402PN.DWG

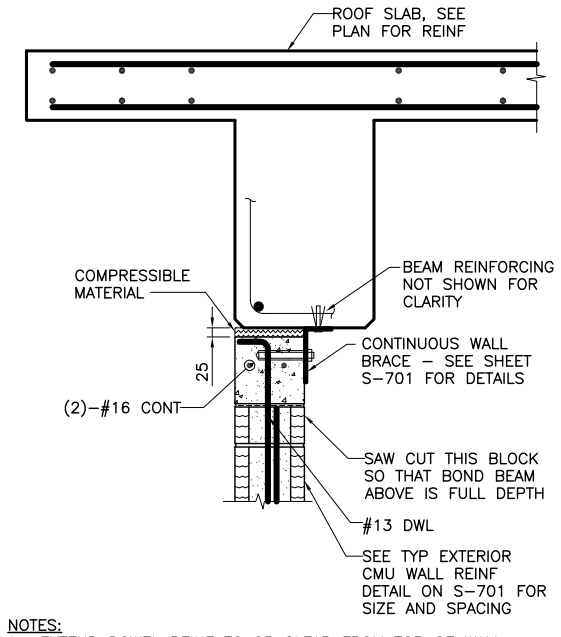

NOTES:
1. EXTEND DOWEL REINF TO 25 CLEAR FROM TOP OF WALL.

SECTION 1 / S–102
SCALE: 1:10

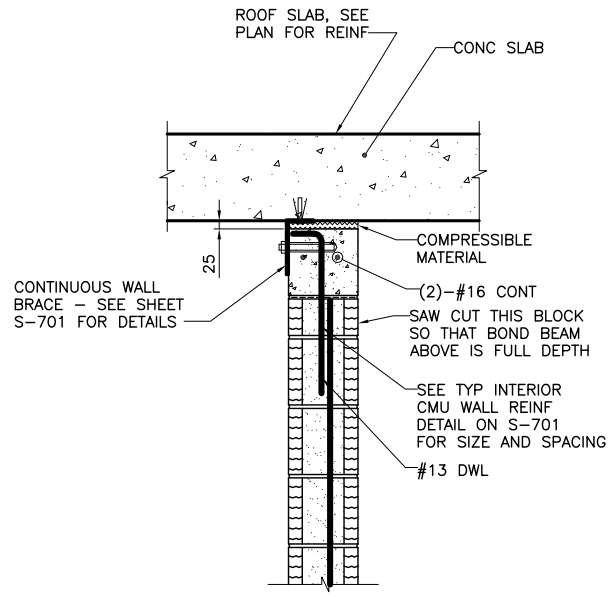

NOTES:
1. EXTEND DOWEL REINF TO 25 CLEAR FROM TOP OF WALL.
2. SLAB REINF NOT SHOWN FOR CLARITY.

SECTION 2 / S–102
SCALE: 1:10

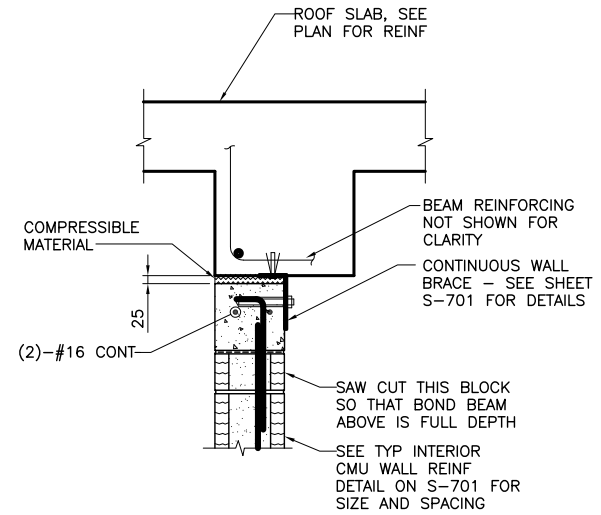

NOTES:
1. EXTEND DOWEL REINF TO 25 CLEAR FROM TOP OF WALL.
2. PARTITION WALL MAY BE CENTERED UNDER THE BEAM OR FLUSH AS SHOWN. SEE PLAN FOR LOCATION.
3. SLAB REINF NOT SHOWN FOR CLARTIY.

SECTION 3 / S–102
SCALE: 1:10

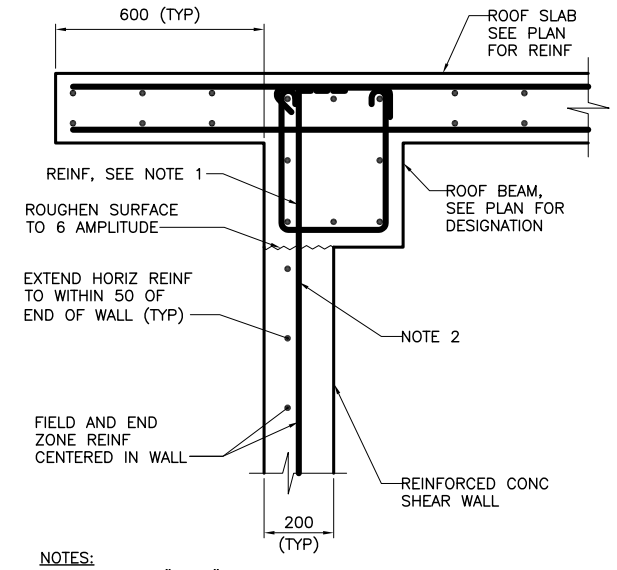

NOTES:
1. TERMINATE "FIELD" VERT REINF & END ZONE REINF @ 50 CLEAR FROM TOP OF ROOF SLAB.
2. WHERE VERTICAL REINFORCING CANNOT BE DEVELOPED IN BEAM DEPTH, PROVIDE STANDARD HOOK.
3. SEE SHEET S–601 AND SHEET S–702 FOR SCHEDULED FIELD AND END ZONE REINF.

SECTION 4 / S–102
SCALE: 1:10

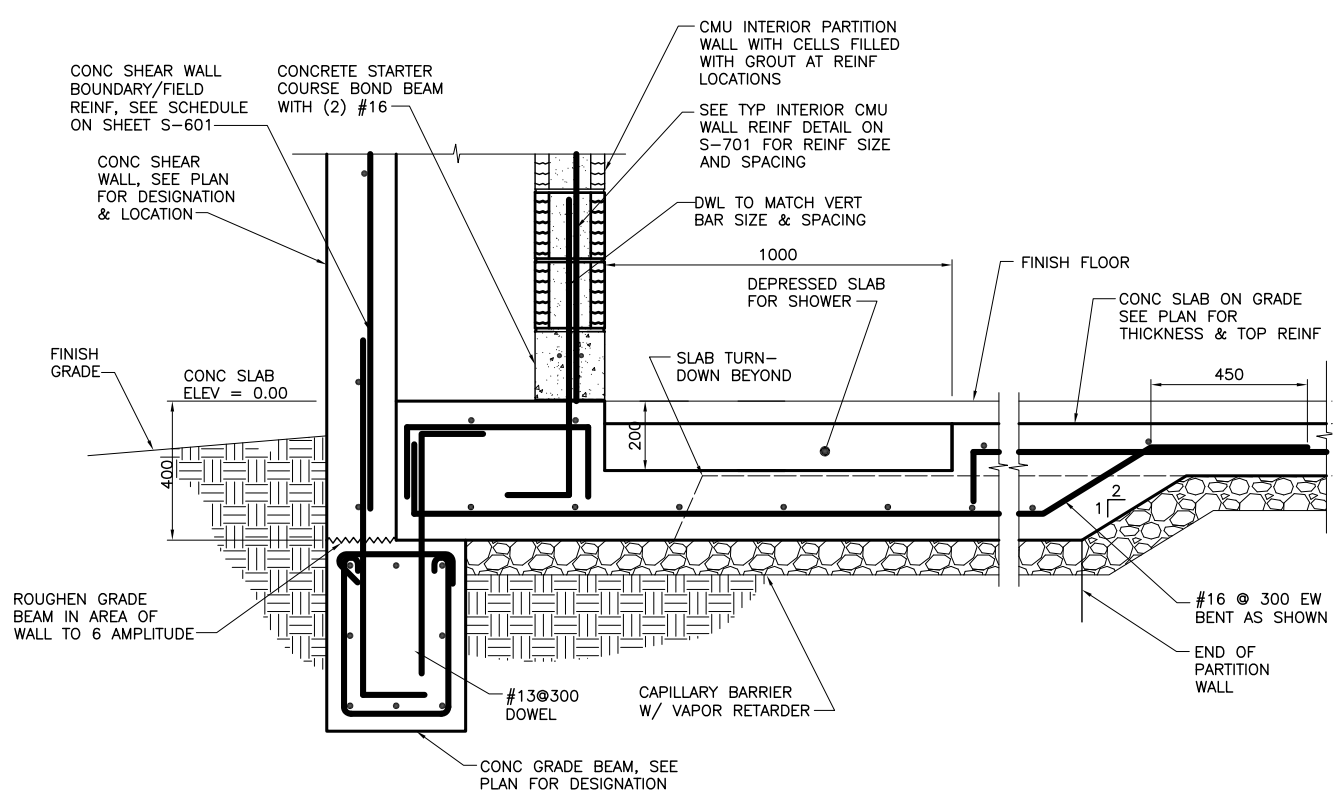

SECTION 5 / S–402
SCALE: 1:10

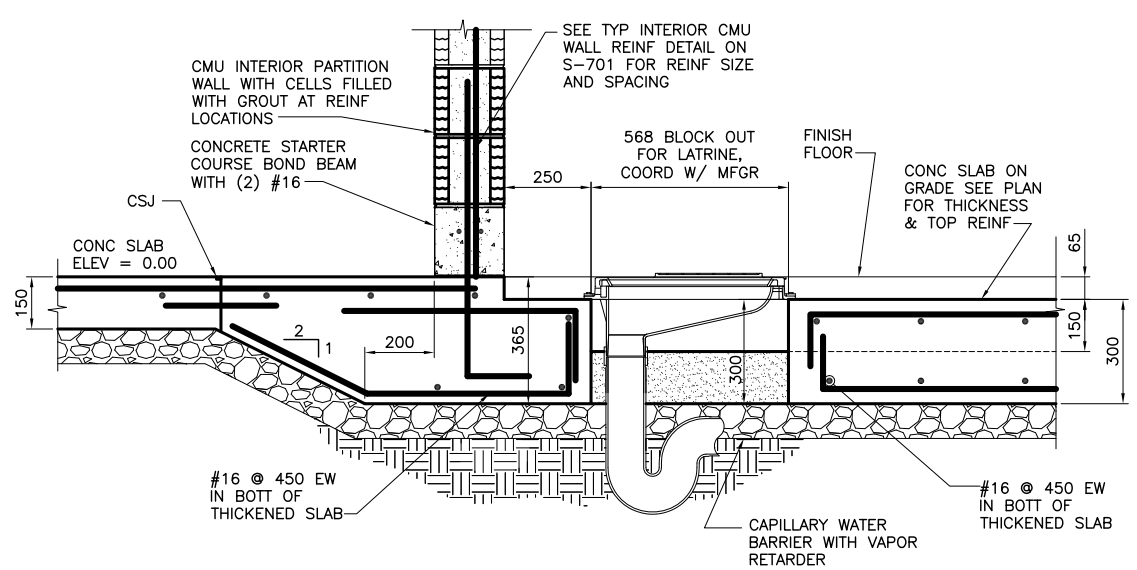

SECTION 6 / S–402
SCALE: 1:10

0 .50 1.00
1:10

UNLESS NOTED OTHERWISE, LINEAR DIMENSIONS SHOWN ARE IN MILLIMETERS.

APPROVED:

A/E DESIGNER OF RECORD

SEAL:

US ARMY CORPS OF ENGINEERS
AFGHANISTAN ENGINEER DISTRICT

Mark	Description	Date	Appr.	Mark	Description	Date	Appr.

U.S. ARMY ENGINEER DISTRICT, AFGHANISTAN
CORPS OF ENGINEERS
APO AE 96338

Designed by: | Date: 5/19/10 | Rev: 0
Dwn by: | Ckd by: | Design file no.
Reviewed by: | Drawing code:
Submitted by: | File name: AF1024B-SS502SE | Plot date: 2010/06/06 | Plot scale:

STANDARD DESIGN
VARIOUS PROJECTS
VARIOUS LOCATIONS, AFGHANISTAN

NCO BARRACKS

FOUNDATION AND FRAMING SECTIONS

SHEET REFERENCE NUMBER:
B
S–502

R:\ENGINEERING\26 STANDARD DESIGNS\A-E STANDARD DESIGNS\NCO BARRACKS\AF1024B-SS502SE.DWG

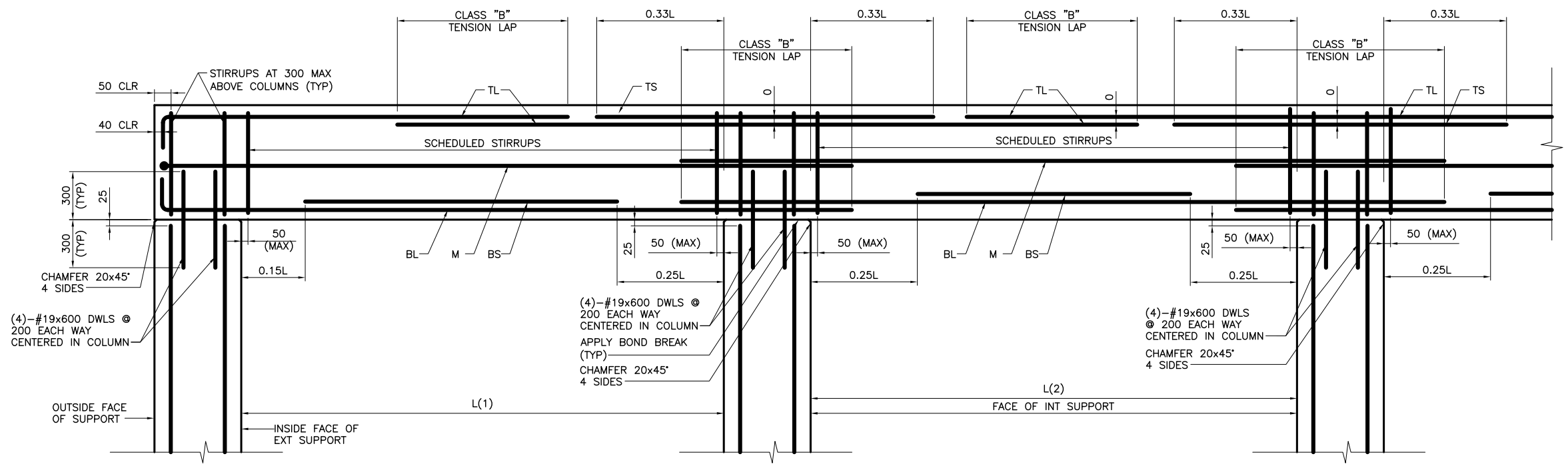

DETAIL NOTE:
1. WORK THIS DETAIL WITH BEAM SCHEDULE ON SHEET S-601.
2. L=GREATEST OF ADJACENT SPANS L(1) OR L(2)
3. ONLY COLUMN CORNER BARS ARE SHOWN

ROOF BEAM REINFORCING DETAIL (1 / S-503)
SCALE: NONE

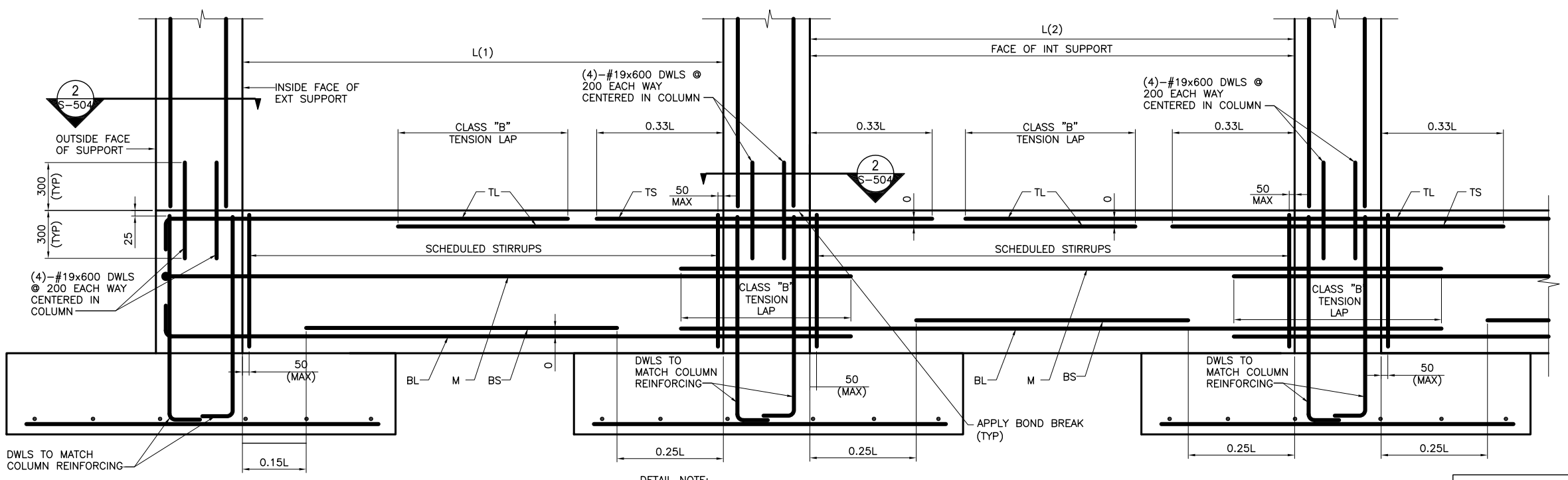

DETAIL NOTE:
1. WORK THIS DETAIL WITH BEAM SCHEDULE ON SHEET S-601.
2. L=GREATEST OF ADJACENT SPANS L(1) OR L(2)
3. ONLY COLUMN CORNER BARS ARE SHOWN.

GRADE BEAM REINFORCING DETAIL (2 / S-503)
SCALE: NONE

UNLESS NOTED OTHERWISE, LINEAR DIMENSIONS SHOWN ARE IN MILLIMETERS.

APPROVED:

A/E DESIGNER OF RECORD

SEAL:

US ARMY CORPS OF ENGINEERS
AFGHANISTAN ENGINEER DISTRICT

Mark	Description	Date	Appr.	Mark	Description	Date	Appr.

U.S. ARMY ENGINEER DISTRICT, AFGHANISTAN
CORPS OF ENGINEERS
APO AE 96338

Designed by: Dwn by: Ckd by: Reviewed by: Submitted by:
Date: 5/19/10 Design file no. Drawing code:
Rev: 0
File name: AF1024B-SS503DT
Plot date: 20100608
Plot scale:

STANDARD DESIGN
VARIOUS PROJECTS
VARIOUS LOCATIONS, AFGHANISTAN

NCO BARRACKS

BEAM AND COLUMN DETAILS
SHEET 1

SHEET REFERENCE NUMBER:
B
S-503

R:\ENGINEERING\26 STANDARD DESIGNS\A-E STANDARD DESIGNS\NCO BARRACKS\AF1024B-SS503DT.DWG

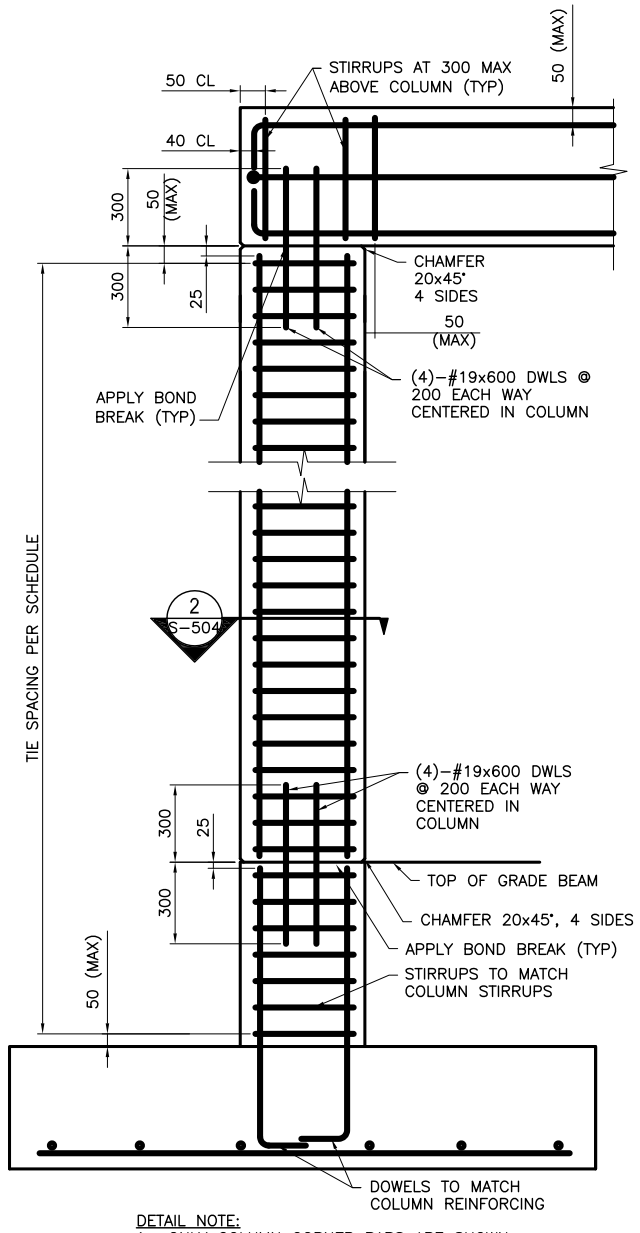

DETAIL NOTE:
1. ONLY COLUMN CORNER BARS ARE SHOWN

1-STORY COLUMN REINFORCING DETAILS (1 / S–504)
SCALE: NONE

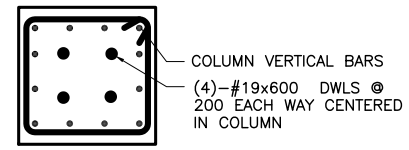

DETAIL NOTE:
1. INTERIOR TIES NOT SHOWN FOR CLARITY. REFER TO 12 BAR COLUMN DETAIL THIS SHEET FOR INTERIOR TIE CONFIGURATION.

SECTION (2 / S–503,S–504)
SCALE: NONE

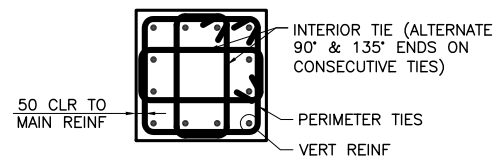

12 BAR COLUMN DETAIL (A / S–504)
SCALE: NONE

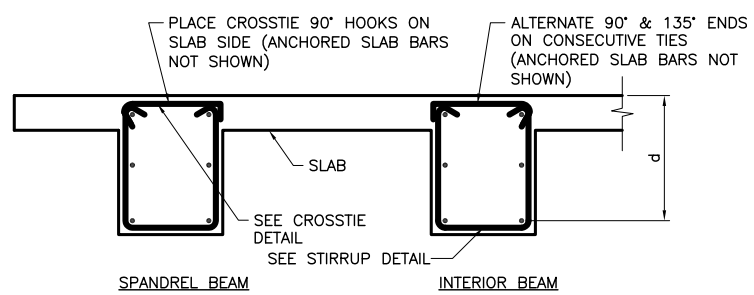

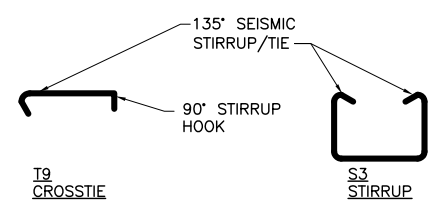

BEAM REINFORCEMENT DETAILS (B / S–504)
SCALE: NONE

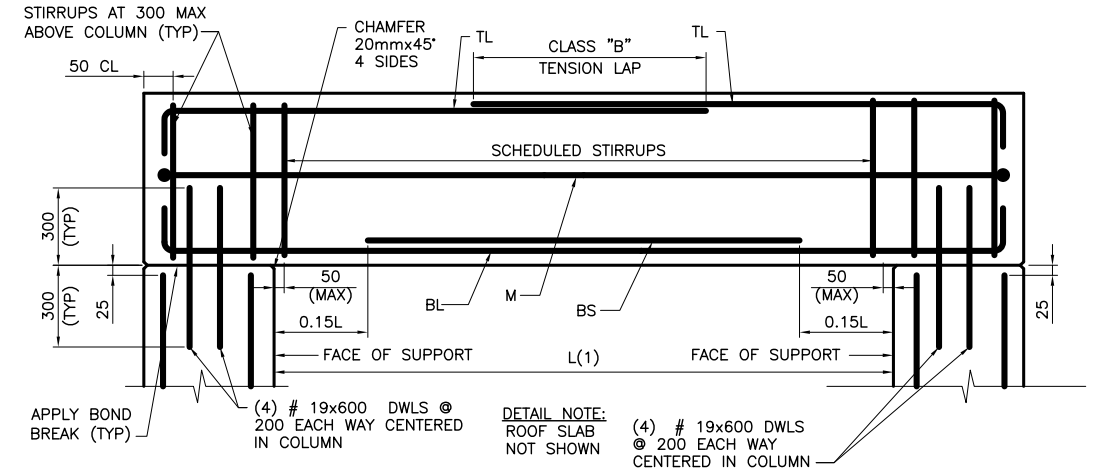

SINGLE SPAN ROOF BEAM REINFORCING DETAIL (3 / S–504)
SCALE: NONE

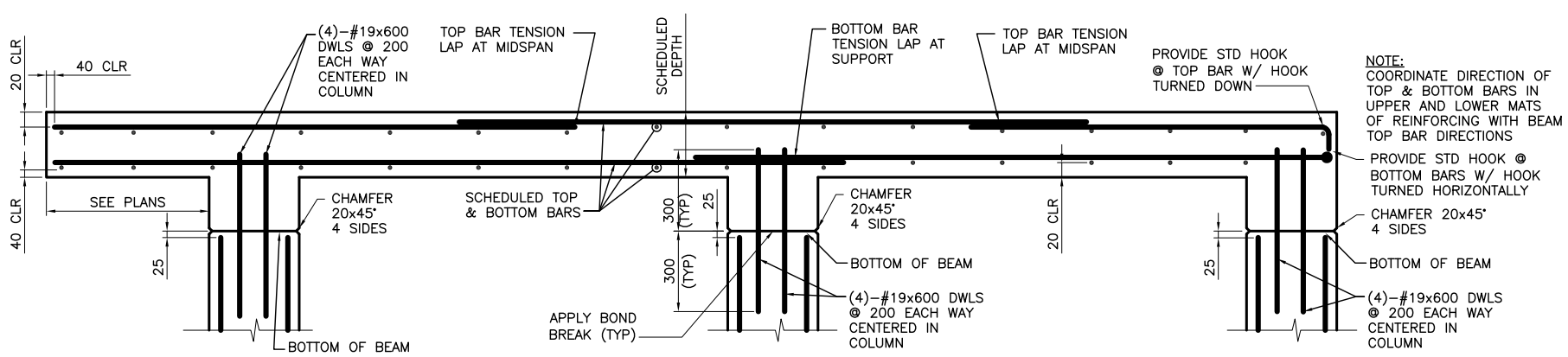

FRAMED SLAB REINFORCING DETAIL (4 / S–504)
SCALE: NONE

UNLESS NOTED OTHERWISE, LINEAR DIMENSIONS SHOWN ARE IN MILLIMETERS.

APPROVED:

A/E DESIGNER OF RECORD

SEAL:

US ARMY CORPS OF ENGINEERS
AFGHANISTAN ENGINEER DISTRICT

Mark	Description	Date	Appr.	Mark	Description	Date	Appr.

Designed by: | Date: 5/19/10 | Rev: 0
Dwn by: | Ckd by: | Design file no.
Reviewed by: | Drawing code:
Submitted by: | File name: AF1024B-S5504DT | Plot date: 2010/06/08 | Plot scale:

U.S. ARMY ENGINEER DISTRICT, AFGHANISTAN
CORPS OF ENGINEERS
APO AE 96338

STANDARD DESIGN
VARIOUS PROJECTS
VARIOUS LOCATIONS, AFGHANISTAN

NCO BARRACKS

BEAM AND COLUMN DETAILS
SHEET 2

SHEET REFERENCE NUMBER:
B
S–504

R:\ENGINEERING\26 STANDARD DESIGNS\A-E STANDARD DESIGNS\NCO BARRACKS\AF1024B-S5504DT.DWG

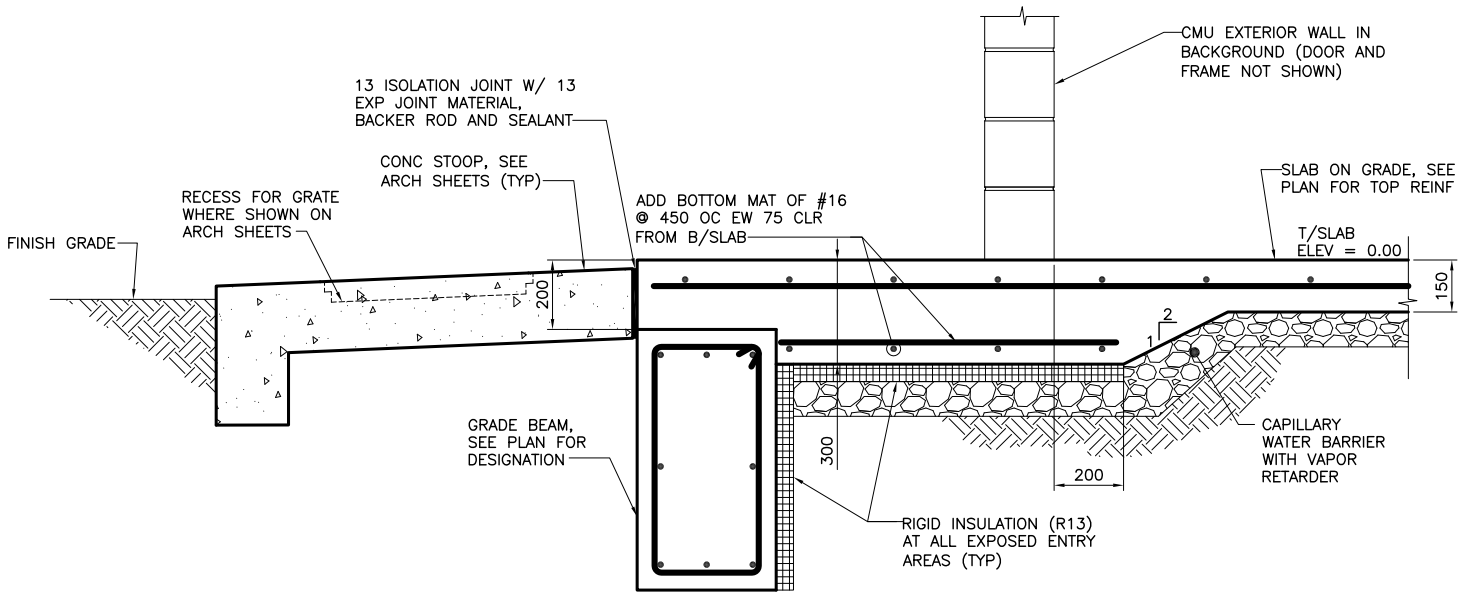

SECTION 1 / S-101
SCALE: 1:10

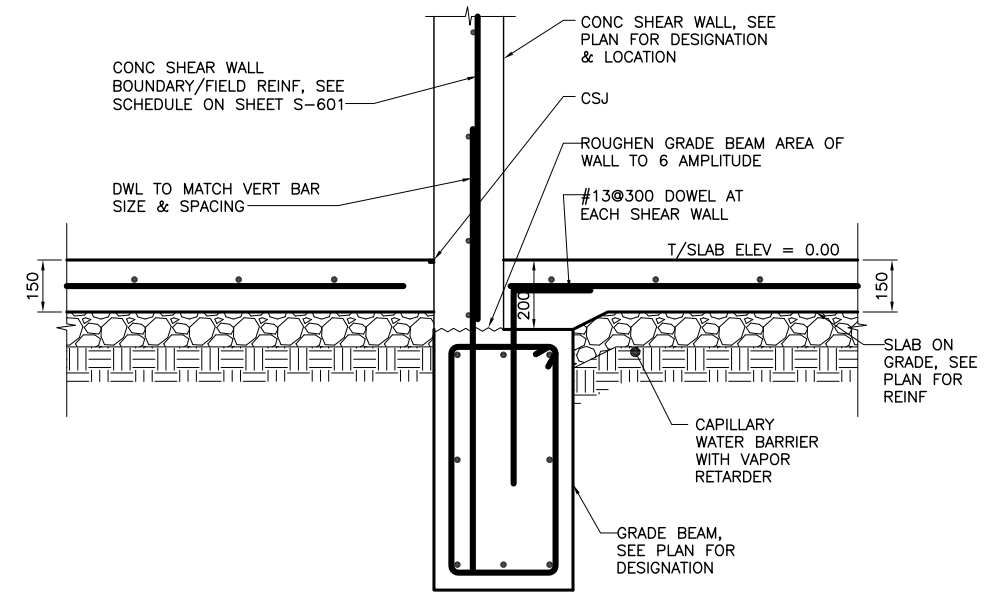

SECTION 2 / S-402
SCALE: 1:10

0 .50 1.00
1:10

UNLESS NOTED OTHERWISE, LINEAR DIMENSIONS SHOWN ARE IN MILLIMETERS.

APPROVED:

A/E DESIGNER OF RECORD

SEAL:

US ARMY CORPS OF ENGINEERS
AFGHANISTAN ENGINEER DISTRICT

Mark	Description	Date	Appr.	Mark	Description	Date	Appr.

U.S. ARMY ENGINEER DISTRICT, AFGHANISTAN
CORPS OF ENGINEERS
APO AE 96338

Designed by: Date: 5/19/10 Rev: 0
Dwn by: Ckd by: Design file no.
Reviewed by: Drawing code:
Submitted by: File name: AF1024B-SS505SE
Plot date: 2010/06/08
Plot scale:

STANDARD DESIGN
VARIOUS PROJECTS
VARIOUS LOCATIONS, AFGHANISTAN

NCO BARRACKS

MISCELLANEOUS SECTIONS

SHEET REFERENCE NUMBER:
B
S-505

R:\ENGINEERING\26 STANDARD DESIGNS\A-E STANDARD DESIGNS\NCO BARRACKS\AF1024B-SS505SE.DWG

CONCRETE REINFORCEMENT TENSION DEVELOPMENT/LAP SPLICE SCHEDULE

f'c = 28 MPa	LAP CLASS	UNCOATED BARS			
		TOP BARS		OTHER BARS	
BAR SIZES		CASE 1	CASE 2	CASE 1	CASE 2
#10 TO #19	A	50 BAR DIA	74 BAR DIA	38 BAR DIA	57 BAR DIA
	B	64 BAR DIA	96 BAR DIA	50 BAR DIA	74 BAR DIA
#22 TO #57	A	62 BAR DIA	93 BAR DIA	48 BAR DIA	71 BAR DIA
	B	80 BAR DIA	121 BAR DIA	62 BAR DIA	93 BAR DIA

NOTES:
1. TABULATED TENSION DEVELOPMENT LENGTH VALUES ARE TAKEN FROM CRSI DESIGN HANDBOOK 2008 10TH ED.
2. TENSION DEVELOPMENT & TENSION LAP SPLICE LENGTHS ARE EXPRESSED AS MULTIPLES OF BAR DIAMETERS.
3. TABULATED VALUES ARE BASED ON MINIMUM YIELD STRENGTH OF REINFORCEMENT, fy, OF 420MPa.
4. CONCRETE IS NORMAL WEIGHT (2400Kg/m^3) AND 28 DAY COMPRESSIVE STRENGTH = 28MPa.
5. TABULATED VALUES FOR BEAMS & COLUMNS ARE BASED ON TRANSVERSE REINFORCEMENT AND CONCRETE COVER MEETING MINIMUM CODE REQUIREMENTS.
6. CASES 1 & 2, WHICH DEPEND ON THE TYPE OF STRUCTURAL MEMBER, CONCRETE COVER, AND CENTER–TO–CENTER SPACING OF THE BARS ARE DEFINED IN THE TABLE BELOW.
7. LAP SPLICE LENGTHS (MINIMUM 300mm) ARE MULTIPLES OF TENSION DEVELOPMENT LENGTHS: CLASS A = 1.0(TENSION DEVELOPMENT LENGTH) & CLASS B = 1.3(TENSION DEVELOPMENT LENGTH)
8. TOP BARS ARE HORIZONTAL REINFORCEMENT WITH MORE THAN 300mm OF CONCRETE CAST BELOW THE BARS.
9. IT SHALL BE PERMISSIBLE TO CALCULATE WALL AND SLAB REINFORCEMENT TENSION DEVELOPMENT/SPLICE LENGTHS IN ACCORDANCE WITH ACI 12.2.3 OR TABLE 5.3(b) OF CRSI 2008 IN LIEU OF VALUES TABULATED ABOVE.

BEAMS, COLUMNS	CASE 1	CONCRETE COVER AT LEAST 1 BAR DIA AND CENTER–TO–CENTER SPACING AT LEAST 2 BAR DIA
	CASE 2	CONCRETE COVER LESS THAN 1 BAR DIA OR CENTER–TO–CENTER SPACING LESS THAN 2 BAR DIA
ALL OTHERS	CASE 1	CONCRETE COVER AT LEAST 1 BAR DIA AND CENTER–TO–CENTER SPACING AT LEAST 3 BAR DIA
	CASE 2	CONCRETE COVER LESS THAN 1 BAR DIA OR CENTER–TO–CENTER SPACING LESS THAN 3 BAR DIA

CONCRETE COVER SCHEDULE

MINIMUM CONCRETE COVER PROTECTION FOR REINFORCEMENT BARS SHALL BE AS LISTED BELOW: (SEE ACI 318M–05, SECTION 7.7 FOR CONDITIONS NOT NOTED). DIMENSIONS FOR BAR PLACEMENT GIVEN IN SECTIONS AND DETAILS SHALL SUPERSEDE MINIMUM COVER REQUIREMENTS GIVEN HERE. DIMENSIONS ARE IN mm. PROVIDE STANDARD BAR CHAIRS AND SUPPORT BARS @1200mm MAXIMUM AS REQUIRED TO MAINTAIN CONCRETE PROTECTION SPECIFIED.

FOOTINGS (EARTH FORMED):		70
COLUMNS / PIERS (TO TIES)		40
GRADE BEAMS OR SLAB TURNED DOWN EDGES:		
TOP		40
BOTTOM (EARTH FORMED)		70
SIDES (EARTH FORMED)		70
SIDES (BOARD FORMED)	#16 BAR & SMALLER	40
	#19 THRU #36 BAR	50
ELEVATED BEAMS & SLABS:		
BEAM TIES & STIRRUPS (NOT EXPOSED TO WEATHER)		40
BEAM TIES & STIRRUPS (EXPOSED TO WEATHER)		50
FLOOR SLABS (NOT EXPOSED TO WEATHER)		20
FLOOR SLABS (EXPOSED TO WEATHER)		
#19 & LARGER		50
#13 & SMALLER		40
ROOF SLAB BARS		25
SLABS ON GRADE		
NOT EXPOSED TO WEATHER (FROM TOP)		20
EXPOSED TO WEATHER (FROM TOP)		40
UTILITY TUNNEL WALLS, RETAINING WALLS AND SHEAR WALLS. (NO SURFACES SHALL BE EARTH FORMED)		
EARTH SIDE AND FRONT SIDE (EXPOSED TO WEATHER)		
#16 BAR AND SMALLER		40
#19 THRU #36 BAR		50

COLUMN FOOTING SCHEDULE

MARK	FOOTING SIZE (mm)			FOOTING REINFORCING	REMARKS
	LENGTH	WIDTH	THICKNESS		
F1	3400	3400	400	(10)–#22 EW BOTT	-----
F2	3900	3900	450	(13)–#22 EW BOTT	-----
F3	4400	4400	500	(13)–#13 EW TOP (13)–#25 EW BOTT	-----

CONCRETE SHEAR WALL SCHEDULE

MARK	TYPE	WALL LENGTH (L) (mm)	WALL REINFORCEMENT		REMARKS
			END ZONE	FIELD	
SW1	B	3600	(3)–#16 @ 150mm OC	#13 @ 250mm OC	-----
SW2	C	6600	(3)–#16 @ 150mm OC	#13 @ 250mm OC	2 WINDOW OPENINGS
SW3	C	6900	(3)–#16 @ 150mm OC	#13 @ 250mm OC	-----
SW4	C	6900	(3)–#16 @ 150mm OC	#13 @ 250mm OC	1 WINDOW OPENING
SW5	C	6600	(3)–#16 @ 150mm OC	#13 @ 250mm OC	1 WINDOW OPENING

NOTES:
1. WORK THIS SCHEDULE WITH SHEAR WALL DETAILS ON SHEETS S–702
2. SEE PLAN FOR LOCATION OF SHEAR WALL(S).
3. VERTICAL "FIELD" BARS MAY BE OMITTED IN LOCATION OF "END ZONE" REINFORCEMENT.
4. WALL FIELD REINF LISTED APPLIES TO VERT & HORIZ BARS.
5. WALL FIELD REINFORCEMENT CENTERED IN WALL.
6. END ZONE REINF IS VERTICAL REINF EACH END ZONE.
7. SEE SHEET S–702 FOR ADDITONAL REINF AT OPENINGS.
8. ONLY LARGE OPENINGS ARE LISTED IN REMARKS COLUMN, FOR ADDITIONAL SMALLER OPENINGS SEE ARCHITECTURAL, MECHANICAL, AND ELECTRICAL SHEETS.

STANDARD HOOKS IN TENSION PER (ACI 318M-05)

HOOK DEVELOPMENT LENGTH (mm)	
BAR SIZE	f'c 28 MPa
#10	180
#13	250
#16	300
#19	380
#22	430
#25	480
#29	560

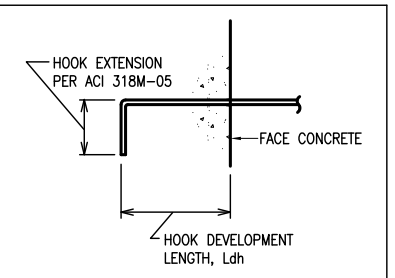

NOTES:
1. CONCRETE IS NORMAL WEIGHT CONCRETE.
2. BAR YIELD STRENGTH, fy = 420 MPa
3. SIDE COVER REQUIREMENTS OF ACI SECT. 12.5.3 ARE ASSUMED TO NOT BE MET.
4. TIE OR STIRRUP REQUIREMENTS OF ACI SECT. 12.5.3 ARE ASSUMED TO NOT BE MET.
5. REDUCTION FOR EXCESS REINFORCEMENT IS NOT TAKEN.
6. HOOK DEVELOPMENT LENGTH IS VALID FOR 180° HOOKS ALSO.

CAST-IN-PLACE CONC LINTEL SCHEDULE (TYP)

OPENING TYPE OR SIZE, BEAM LOCATION OR TYPE	MAX SPAN (mm)	LINTEL DEPTH (mm)	REINFORCING BOTTOM
WALL OPENING	4000	600	(2)–#16 T&B
WALL OPENING	1900	400	(2)–#16 T&B
WALL OPENING	1000	200	(2)–#16 B

1. STRUCTURAL SHEETS DO NOT INDICATE ALL OPENINGS IN MASONRY WALLS. VERIFY NUMBER, SIZE AND LOCATION OF ALL OPENINGS IN MASONRY WALLS FROM ARCHITECTURAL SHEETS AND APPROVED PLUMBING, MECHANICAL, AND ELECTRICAL SHOP DRAWINGS.
2. PROVIDE 200mm BEARING EA END.
3. FOR HEAD DETAILS REFER TO ARCHITECTURAL SHEETS.
4. REINFORCING SHALL BE ASTM A615M, GRADE 420.
5. CONTRACTOR SHALL SUBMIT FOR APPROVAL SHOP DRAWINGS AND SCHEDULES SHOWING SIZE, SPAN, REINFORCEMENT, DETAILS, LOCATIONS, ETC.

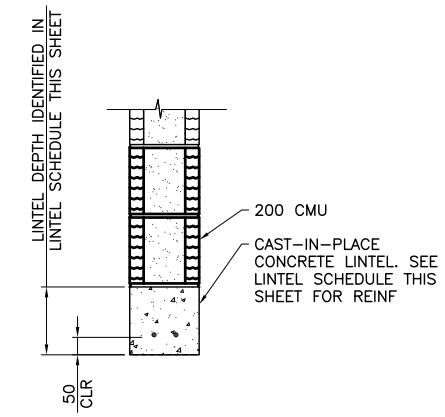

LINTEL DETAIL
SCALE: NONE

BEAM SCHEDULE

MARK	BEAM SIZE (mm)		BEAM REINFORCING						STIRRUPS			REMARKS
	DEPTH	WIDTH	BL	BS	TL	TS	TC	M	SIZE	TYPE	SPACING	-----
GRADE BEAMS												
GB1	750	400	(3)–#22	---	(3)–#22	---	---	(2)–#16	#13	S3 + T9	300	-----
GB2	550	400	(3)–#22	(2)–#22	(3)–#22	---	---	(1)–#16	#13	S3 + T9	220	-----
ROOF BEAMS												
RB1	800	400	(3)–#22	(2)–#22	(3)–#22	---	---	(2)–#16	#13	S3 + T9	300	-----
RB2	800	400	(3)–#22	(2)–#22	(3)–#22	(2)–#22	---	(2)–#16	#13	S3 + T9	300	
RB3	800	400	(3)–#22	---	(3)–#22	---	---	(2)–#16	#13	S3 + T9	300	
RB4	800	400	(3)–#22	---	(3)–#22	(2)–#22	---	(2)–#16	#13	S3 + T9	300	

NOTES:
1. WORK THIS SCHEDULE WITH BEAM REINFORCING DETAILS ON SHEETS S–503 AND S–504.
2. HOOKS SHOWN ON SECTIONS AND DETAILS SHALL BE 90° STD UON.
3. M BARS ARE SIDE BARS EACH FACE.

COLUMN SCHEDULE

DESCRIPTION \ COLUMN MARK	TYP UON	---	---	---
TYPE	12–BAR	---	---	---
DIMENSION	800mm SQ.	---	---	---
VERTICAL REINFORCEMENT	(12)–#29	---	---	---
TIES	#13 @ 300	---	---	---
TOP OF ROOF ELEVATION	3800mm	---	---	---
TOP OF GRADE BEAM ELEVATION	–200mm	---	---	---
TOP OF FOOTING ELEVATION	–950mm	---	---	---

NOTES:
1. WORK THIS SCHEDULE WITH COLUMN DETAILS ON SHEET S–504.
2. SEE FOOTING SCHEDULE ON THIS SHEET FOR FOOTING INFORMATION.
3. COLUMN TIES: INTERIOR TIES TO MATCH SIZE & SPACING OF PERIMETER TIES.
4. HOOKS SHOWN ON SECTIONS & DETAILS SHALL BE 90° STD UON.

UNLESS NOTED OTHERWISE, LINEAR DIMENSIONS SHOWN ARE IN MILLIMETERS.

APPROVED:

A/E DESIGNER OF RECORD

SEAL:

US ARMY CORPS OF ENGINEERS
AFGHANISTAN ENGINEER DISTRICT

Mark	Description	Date	Appr.	Mark	Description	Date	Appr.

U.S. ARMY ENGINEER DISTRICT, AFGHANISTAN
CORPS OF ENGINEERS
APO AE 96338

Designed by: | Date: 5/19/10 | Rev: 0
Dwn by: | Ckd by: | Design file no.
Reviewed by: | Drawing code:
Submitted by: | File name: AF10248-SS601SC | Plot date: 20100608 | Plot scale:

STANDARD DESIGN
VARIOUS PROJECTS
VARIOUS LOCATIONS, AFGHANISTAN

NCO BARRACKS

SCHEDULES

SHEET REFERENCE NUMBER:
B
S–601

R:\ENGINEERING\26 STANDARD DESIGNS\A–E STANDARD DESIGNS\NCO BARRACKS\AF10248–SS601SC.DWG

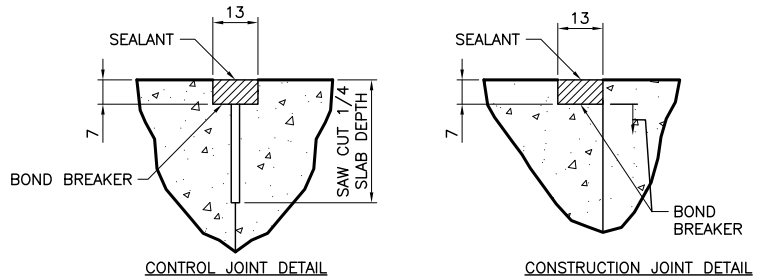

TYPICAL CONCRETE SLAB JOINT FINISH DETAIL (1 / S-701)

SCALE: NONE

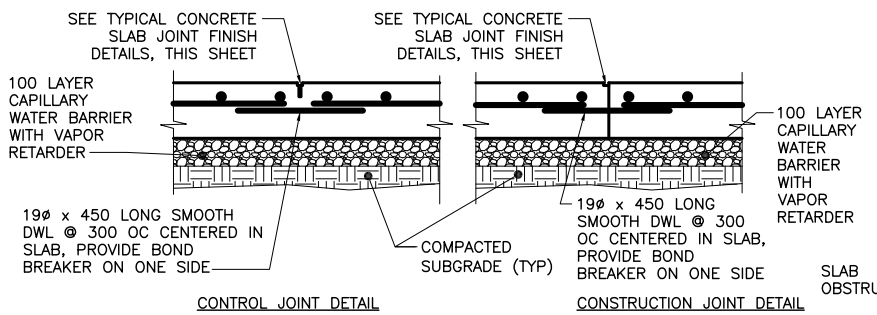

TYPICAL SLAB ON GRADE JOINT DETAIL (2 / S-701)

SCALE: NONE

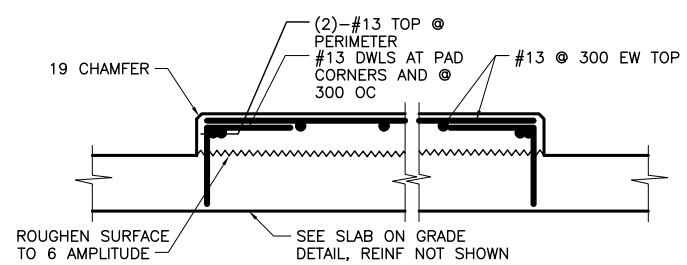

INTERIOR EQUIPMENT PAD DETAIL (3 / S-701)

SCALE: NONE

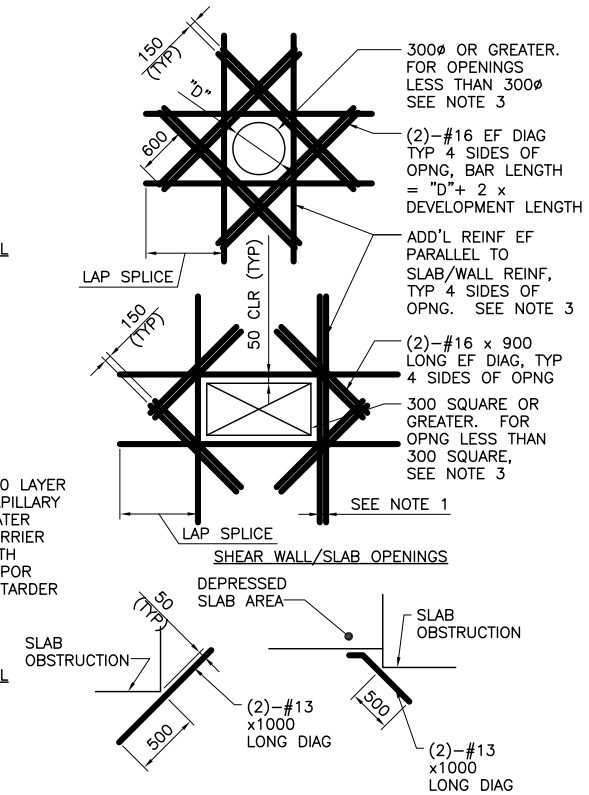

DETAIL NOTES:

1. WHERE MORE THAN ONE ADDITIONAL BAR IS REQUIRED PARALLEL TO THE EXISTING SLAB/WALL REINFORCING THE ADDITIONAL REINFORCING BARS SHALL BE SPACED AT 100 ON CENTER.
2. ADDITIONAL REINFORCING PARALLEL TO THE SLAB/WALL REINFORCING SHALL BE #16 BARS THAT PROVIDE A STEEL AREA ON EACH SIDE OF THE OPENING EQUAL TO 1/2 THE AREA OF THE REINFORCING CUT BY THE OPENING.
3. FOR OPENINGS WITH SIDES OR DIAMETERS LESS THAN 300 SPREAD THE SLAB/WALL REINFORCING TO CLEAR THE OPENING.

ADD'L CONCRETE REINFORCEMENT DETAILS (4 / S-701)

SCALE: NONE

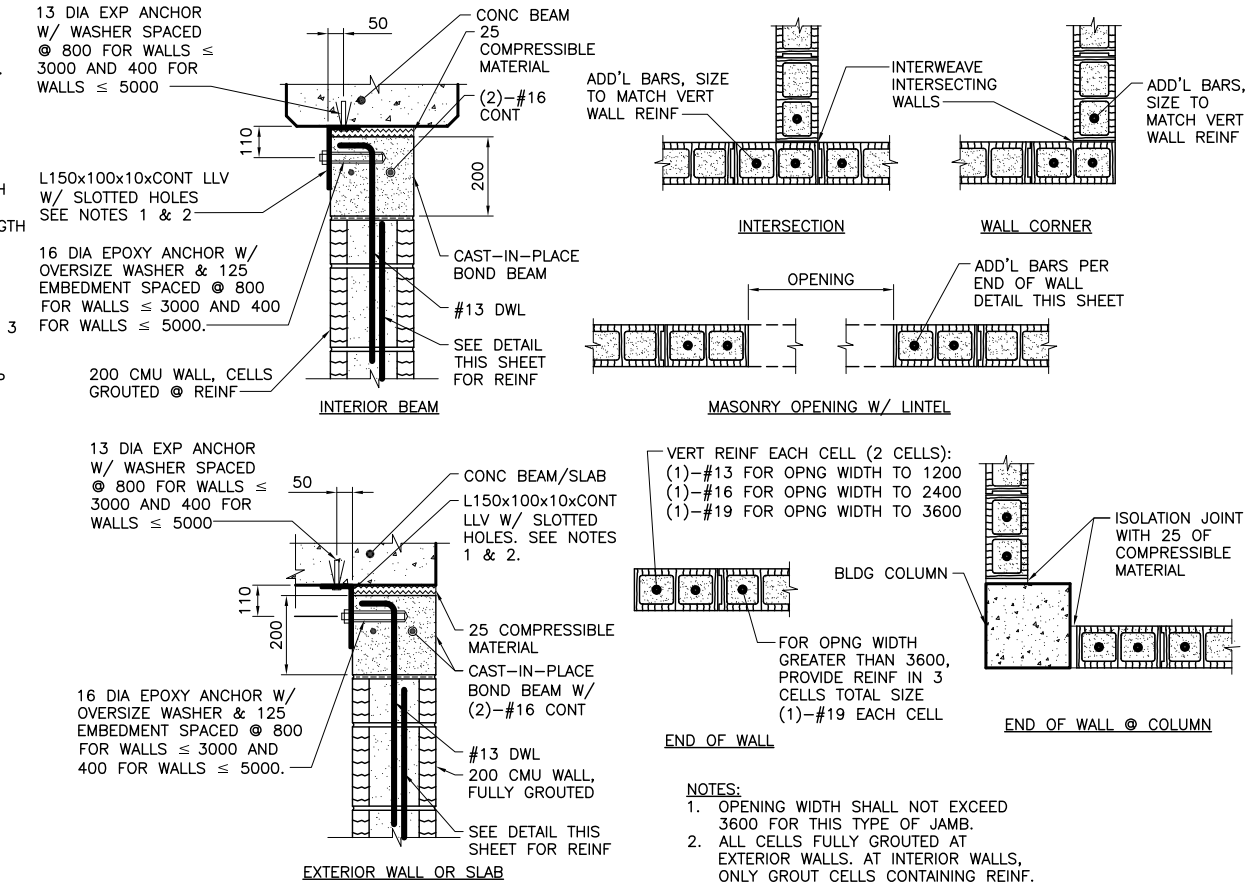

NOTES:

1. PROVIDE 40X20 VERTICAL SLOTTED HOLES IN VERTICAL LEG OF L150X100 CENTERED ON ALL 16 DIA EPOXY ANCHORS.
2. PROVIDE 25X14 SLOTTED HOLES (WITH SLOTS PARALLEL TO WALL) IN HORIZONTAL LEG ON L150X100 CENTERED ON ALL 13 DIA EXPANSION ANCHORS.
3. CAST-IN-PLACE BOND BEAM SHOWN AT TOP OF WALL IS ALSO APPLICABLE FOR INTERMEDIATE AND STARTER COURSE BOND BEAMS WITHIN WALL.

TOP OF CMU WALL BRACING DETAILS (5 / S-701)

SCALE: NONE

NOTES:

1. OPENING WIDTH SHALL NOT EXCEED 3600 FOR THIS TYPE OF JAMB.
2. ALL CELLS FULLY GROUTED AT EXTERIOR WALLS. AT INTERIOR WALLS, ONLY GROUT CELLS CONTAINING REINF.

TYP CMU DETAILS (6 / S-701)

SCALE: NONE

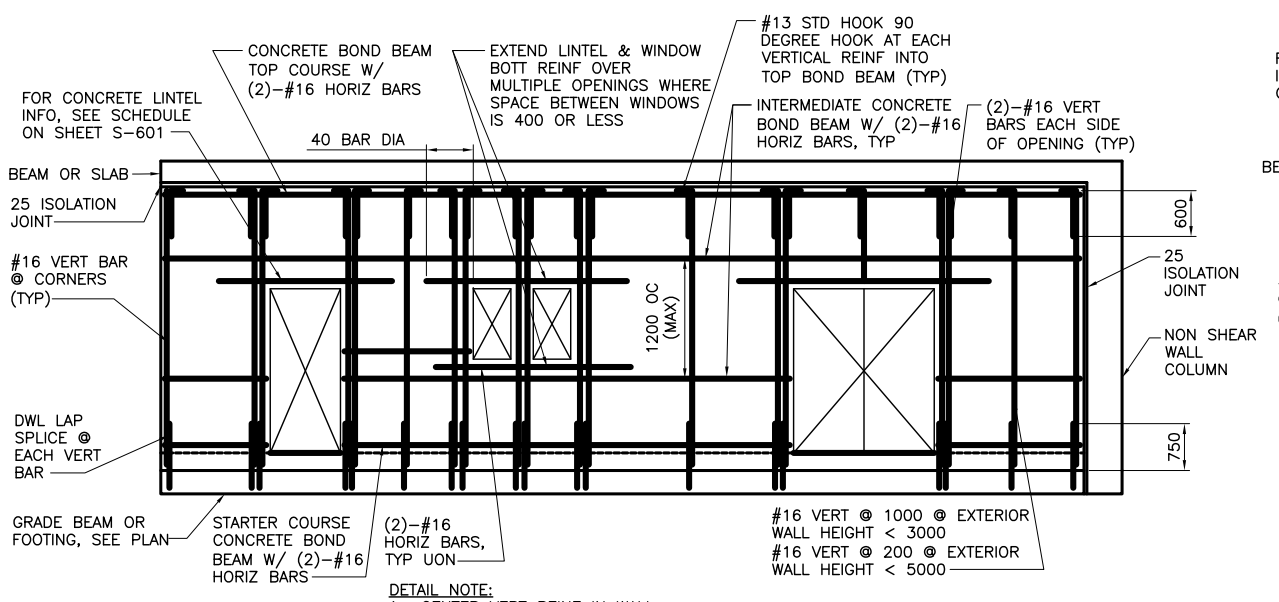

DETAIL NOTE:

1. CENTER VERT REINF IN WALL.
2. GROUT ALL CMU CELLS.
3. REFERENCE ARCH DWGS FOR JOINT INFORMATION
4. DOWELS BETWEEN TOP BOND BEAM AND BEAM/SLAB ABOVE (INCLUDING EMBEDDED PIPE SLEEVE) NOT SHOWN FOR CLARITY. SEE SPECIFIC S-500 SERIES DWGS FOR INFO.

TYPICAL EXTERIOR CMU WALL REINFORCING DETAIL (7 / S-701)

SCALE: NONE

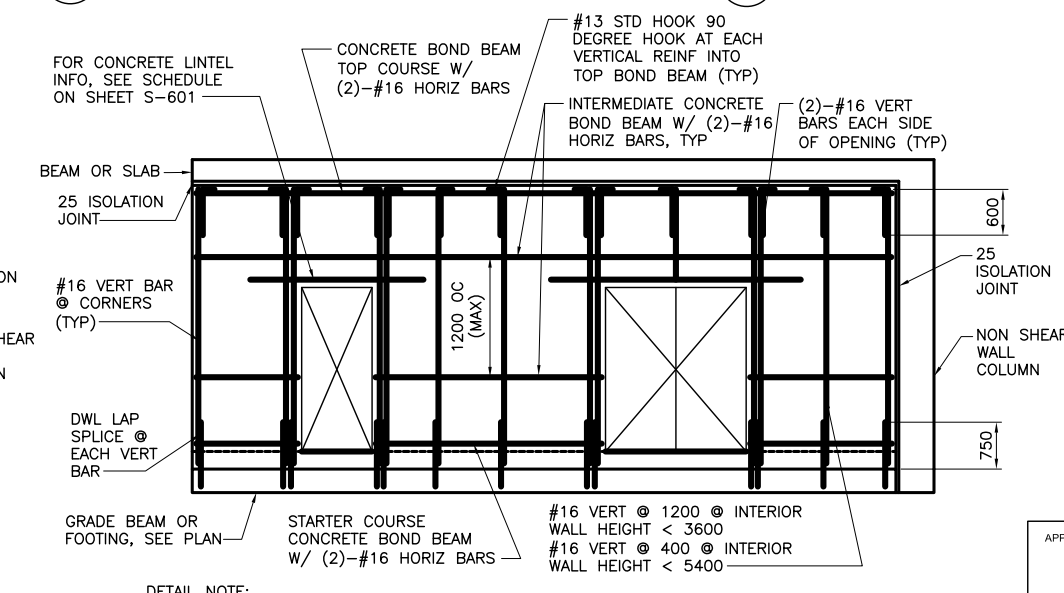

DETAIL NOTE:

1. CENTER VERT REINF IN WALL.
2. GROUT CMU CELLS THAT CONTAIN REINFORCING.
3. REFERENCE ARCH DWGS FOR JOINT INFORMATION
4. DOWELS BETWEEN TOP BOND BEAM AND BEAM/SLAB ABOVE (INCLUDING EMBEDDED PIPE SLEEVE) NOT SHOWN FOR CLARITY. SEE SPECIFIC S-500 SERIES DWGS FOR INFO.

TYPICAL INTERIOR CMU WALL REINFORCING DETAIL (8 / S-701)

SCALE: NONE

UNLESS NOTED OTHERWISE, LINEAR DIMENSIONS SHOWN ARE IN MILLIMETERS.

APPROVED:

A/E DESIGNER OF RECORD

SEAL:

US ARMY CORPS OF ENGINEERS
AFGHANISTAN ENGINEER DISTRICT

Mark	Description	Date	Appr.	Mark	Description	Date	Appr.

Designed by: Date: 5/19/10 Rev: 0
Dwn by: Ckd by: Design file no.
Reviewed by: Drawing code:
Submitted by: File name: AF10248-SS701DT Plot date: 2010/06/08 Plot scale:

U.S. ARMY ENGINEER DISTRICT, AFGHANISTAN
CORPS OF ENGINEERS
APO AE 96338

STANDARD DESIGN
VARIOUS PROJECTS
VARIOUS LOCATIONS, AFGHANISTAN

NCO BARRACKS

TYPICAL DETAILS
SHEET 1

SHEET REFERENCE NUMBER:
B
S-701

R:\ENGINEERING\26 STANDARD DESIGNS\A-E STANDARD DESIGNS\NCO BARRACKS\AF10248-SS701DT.DWG

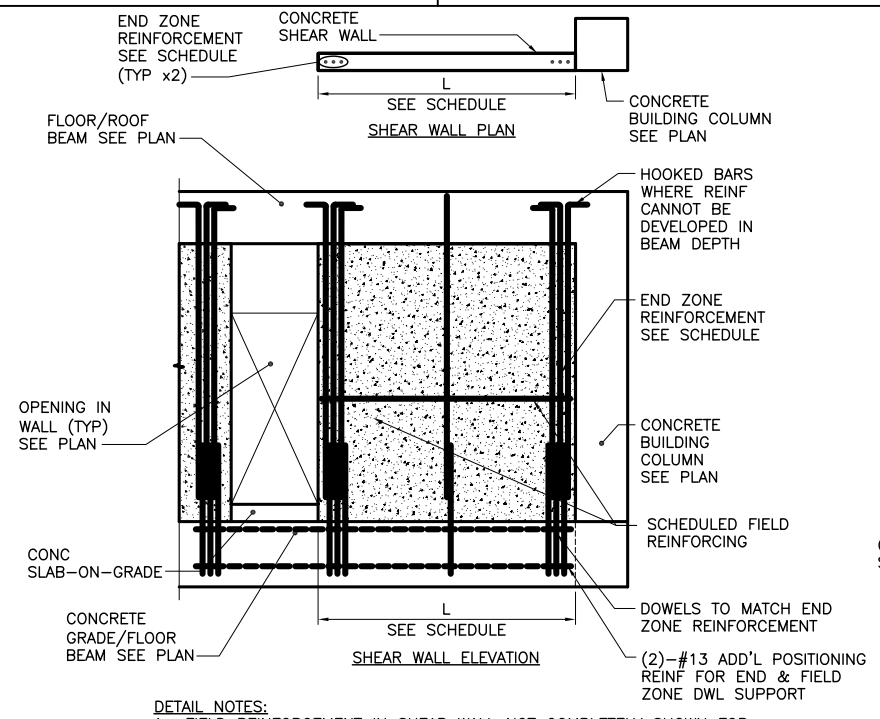

DETAIL NOTES:
1. FIELD REINFORCEMENT IN SHEAR WALL NOT COMPLETELY SHOWN FOR CLARITY.
2. FIELD REINFORCEMENT CENTERED IN WALL.
3. MINIMUM CONC CLEAR DISTANCE FOR END ZONE REINF = 76
4. SEE CONC SHEAR WALL SCHEDULE ON SHEET S-601
5. SEE ARCH DWGS FOR ISOLATION JOINT INFORMATION

TYPE "B" SHEAR WALL DETAIL (1 / S-702)
SCALE: NONE

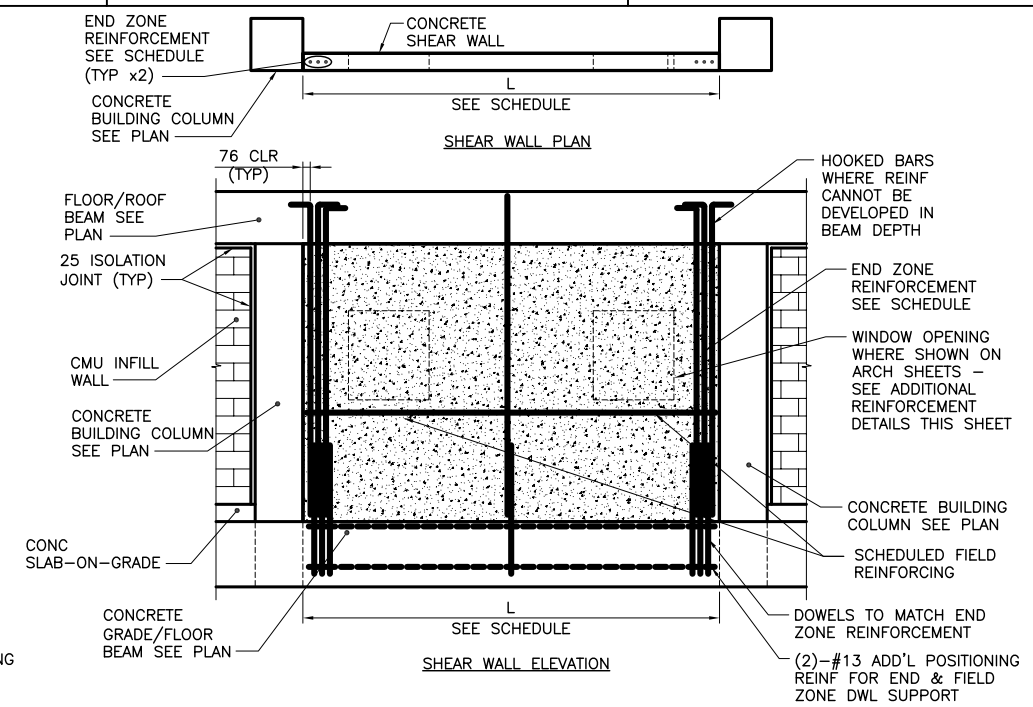

DETAIL NOTES:
1. FIELD REINFORCEMENT IN SHEAR WALL NOT COMPLETELY SHOWN FOR CLARITY.
2. FIELD REINFORCEMENT CENTERED IN WALL.
3. MINIMUM CONC CLEAR DISTANCE FOR END ZONE REINF = 76
4. SEE CONC SHEAR WALL SCHEDULE ON SHEET S-601
5. SEE ARCH DWGS FOR ISOLATION JOINT INFORMATION

TYPE "C" SHEAR WALL DETAIL (2 / S-702)
SCALE: NONE

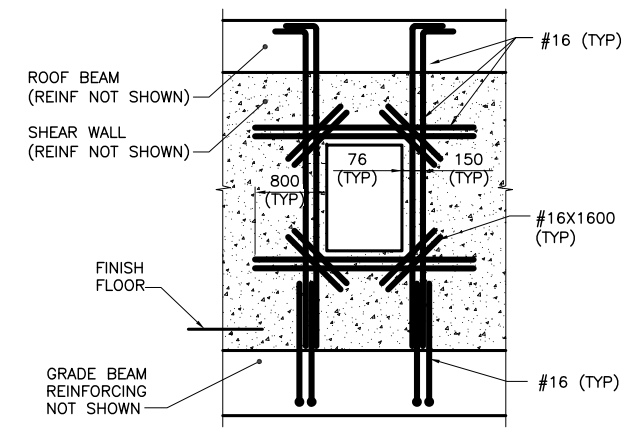

NOTES:
1. OPENINGS NOT ALLOWED IN END ZONES.
2. DISCONTINUE FIELD REINFORCEMENT 50 FROM OPENING.

ADDITIONAL REINFORCING AT OPENINGS IN SHEAR WALLS (3 / S-702)
SCALE: NONE

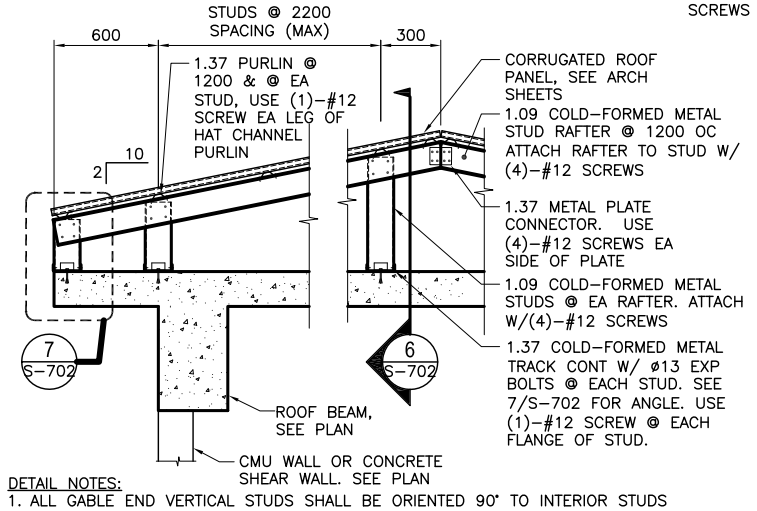

DETAIL NOTES:
1. ALL GABLE END VERTICAL STUDS SHALL BE ORIENTED 90° TO INTERIOR STUDS & SPACED @ 600 OC. GABLE END RAFTER SHALL BE 1.37 METAL TRACK SPANNING CONTINUOUSLY OVER GABLE END STUDS. INSET GIRTS AT GABLE END SHALL BE 1.09 COLD-FORMED METAL STUDS @ 1200 OC ATTACHED VIA 1.37 THICKNESS CLIP ANGLE W/ (2) #12 SCREWS EA LEG.
2. ALL INTERIOR, NON-GABLE END VERTICAL STUDS GREATER THAN 2400 IN LENGTH SHALL BE BACK-TO-BACK W/ #12 SCREWS @ 200 OC STAGGERED.

TYPICAL OVERBUILT ROOF FRAMING DETAIL (4 / S-702)
SCALE: NONE

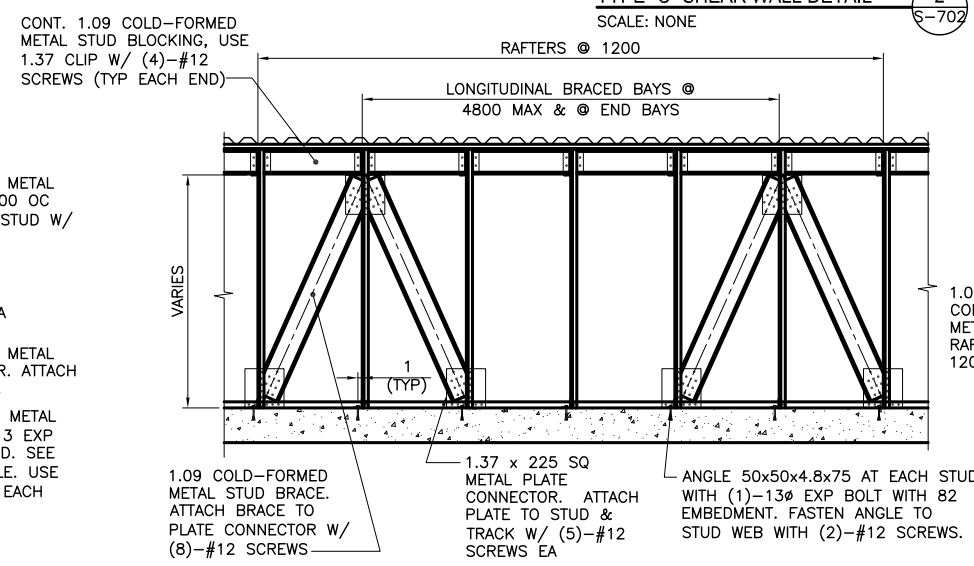

SECTION (6 / S-702)
SCALE: NONE

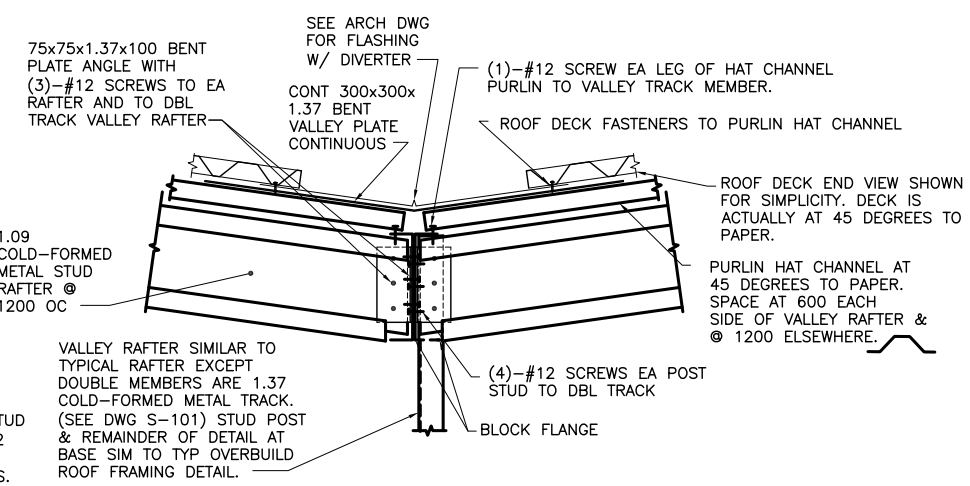

TYPICAL OVERBUILT ROOF SECTION THROUGH VALLEY (9 / S-702)
SCALE: NONE

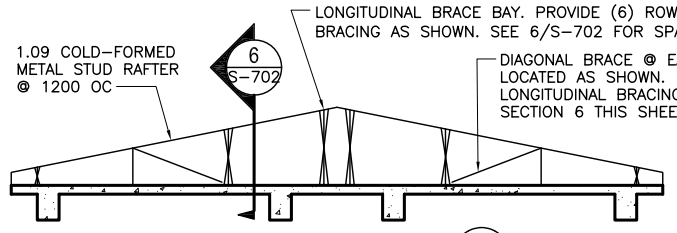

TYPICAL ROOF BRACE LAYOUT (5 / S-702)
SCALE: NONE

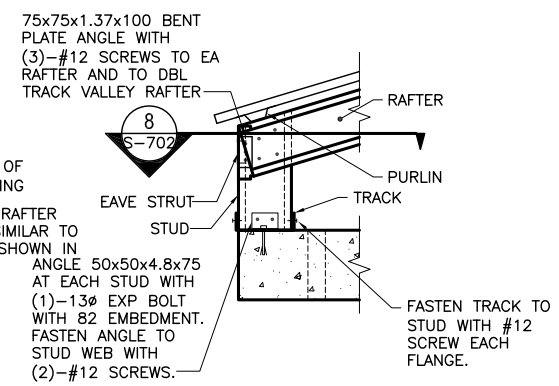

DETAIL (7 / S-702)
SCALE: NONE

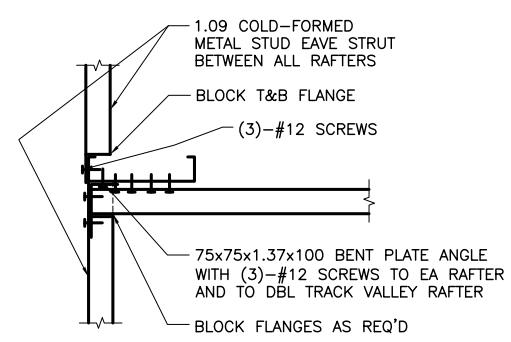

SECTION (8 / S-702)
SCALE: NONE

UNLESS NOTED OTHERWISE, LINEAR DIMENSIONS SHOWN ARE IN MILLIMETERS.

APPROVED:

A/E DESIGNER OF RECORD

SEAL:

US ARMY CORPS OF ENGINEERS
AFGHANISTAN ENGINEER DISTRICT

Mark	Description	Date	Appr.	Mark	Description	Date	Appr.

U.S. ARMY ENGINEER DISTRICT, AFGHANISTAN
CORPS OF ENGINEERS
APO AE 96338

Designed by: | Date: 5/19/10 | Rev: 0
Dwn by: | Ckd by: | Design file no.
Reviewed by: | Drawing code:
Submitted by: | File name: AF1024B-SS702DT | Plot date: 20100608 | Plot scale:

STANDARD DESIGN
VARIOUS PROJECTS
VARIOUS LOCATIONS, AFGHANISTAN

NCO BARRACKS

TYPICAL DETAILS
SHEET 2

SHEET REFERENCE NUMBER:
B
S-702

R:\ENGINEERING\26 STANDARD DESIGNS\A-E STANDARD DESIGNS\NCO BARRACKS\AF1024B-SS702DT.DWG

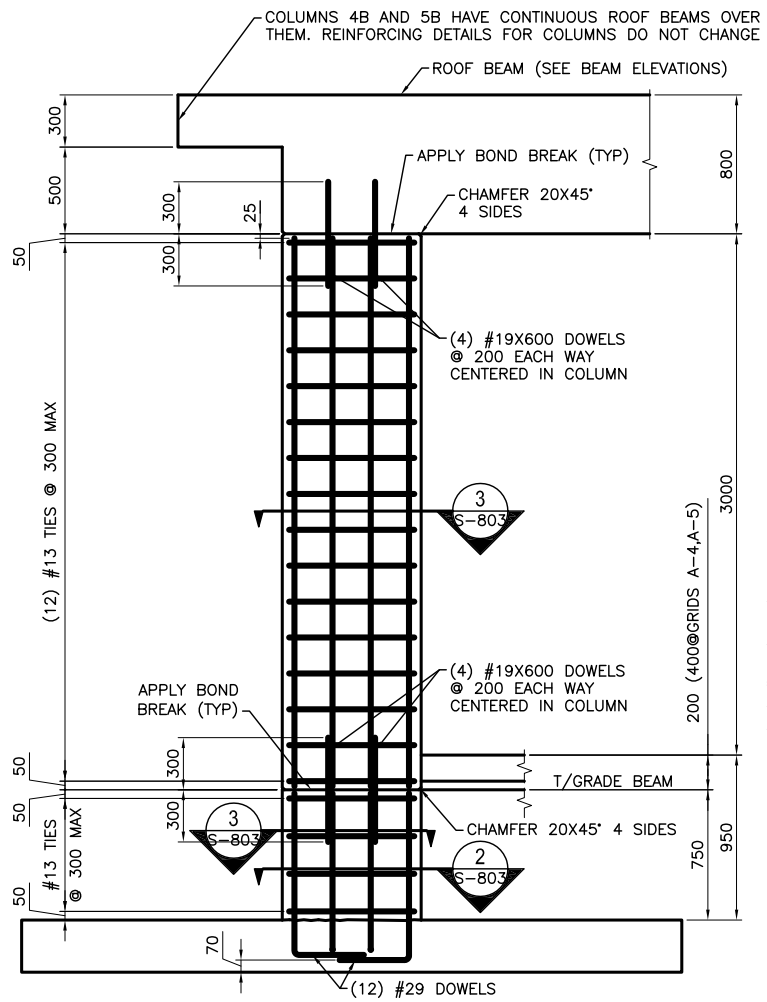

COLUMN ELEVATION (EXTERIOR) 1 S-803

SCALE: 1:20

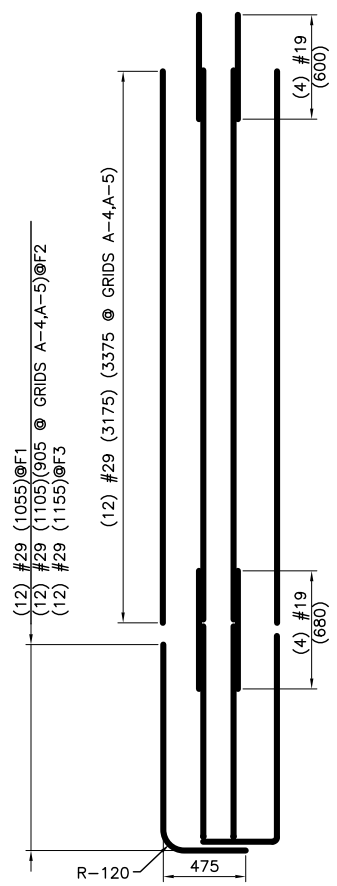

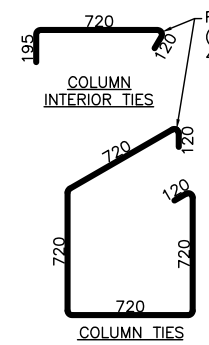

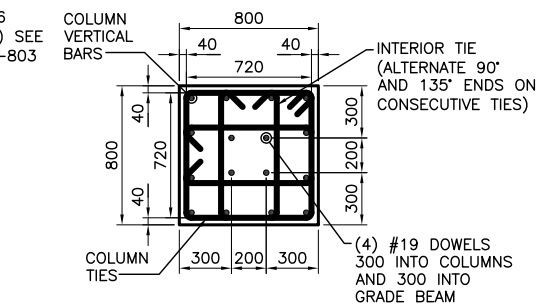

NOTE:
DIMENSIONS SHOWN ARE OUT-TO-OUT

COLUMN SECTIONS 3 S-803

SCALE: 1:20

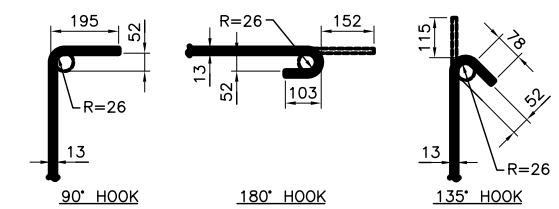

STIRRUP / TIE HOOK DIMENSIONS FOR #13 BAR 4 S-803

SCALE: NONE

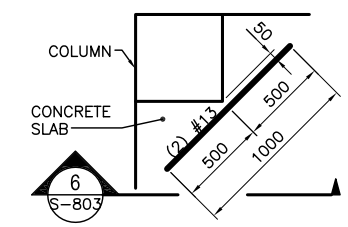

RE-ENTRANT CORNER BAR DETAIL 5 S-803

SCALE: 1:20

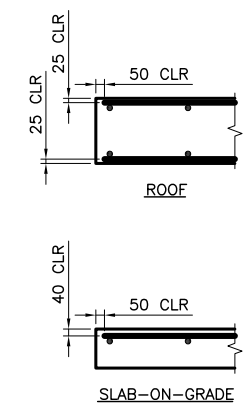

TYPICAL SLAB REBAR CLEARANCES 7 S-803

SCALE: 1:20

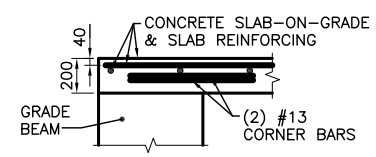

SECTION 6 S-803

SCALE: 1:20

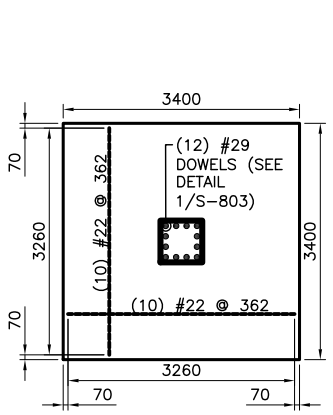

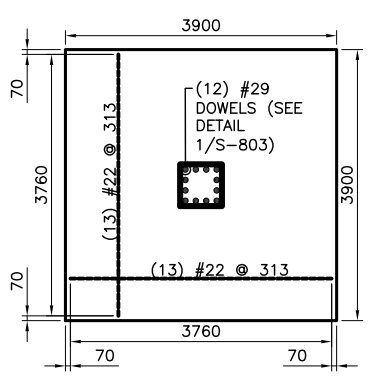

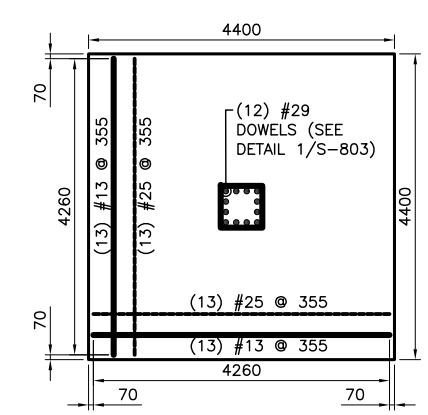

FOOTING PLAN DETAILS 2 S-803

SCALE: 1:50

FOUNDATION REINFORCING LEGEND:

- FOOTING REINFORCING BOTTOM BARS
- FOOTING REINFORCING TOP BARS

NOTE:

1. REBAR DETAIL AND PLACEMENT DRAWINGS (800 SERIES) ARE PROVIDED FOR INFORMATION ONLY. REBAR PLACEMENT AND DETAIL DRAWINGS SHALL BE CHECKED AND VALIDATED BY CONSTRUCTION CONTRACTOR.

1 .50 0 1
1:20
1 0 1 2 3 4
1:50

UNLESS NOTED OTHERWISE, LINEAR DIMENSIONS SHOWN ARE IN MILLIMETERS.

US ARMY CORPS OF ENGINEERS
AFGHANISTAN ENGINEER DISTRICT

Mark	Description	Date	Appr.	Mark	Description	Date	Appr.

Designed by: Date: 5/19/10 Rev: 0
Dwn by: Ckd by: Design file no.
Reviewed by: Drawing code:
Submitted by: File name: AF10248-SS803DT Plot date: 2010/06/08 Plot scale:

U.S. ARMY ENGINEER DISTRICT, AFGHANISTAN
CORPS OF ENGINEERS
APO AE 96338

STANDARD DESIGN
VARIOUS PROJECTS
VARIOUS LOCATIONS, AFGHANISTAN

NCO BARRACKS

REBAR REINFORCEMENT DRAWINGS
COLUMN AND SECTIONS DETAILS

SHEET REFERENCE NUMBER:
B
S-803

R:\ENGINEERING\26 STANDARD DESIGNS\A-E STANDARD DESIGNS\NCO BARRACKS\AF10248-SS803DT.DWG

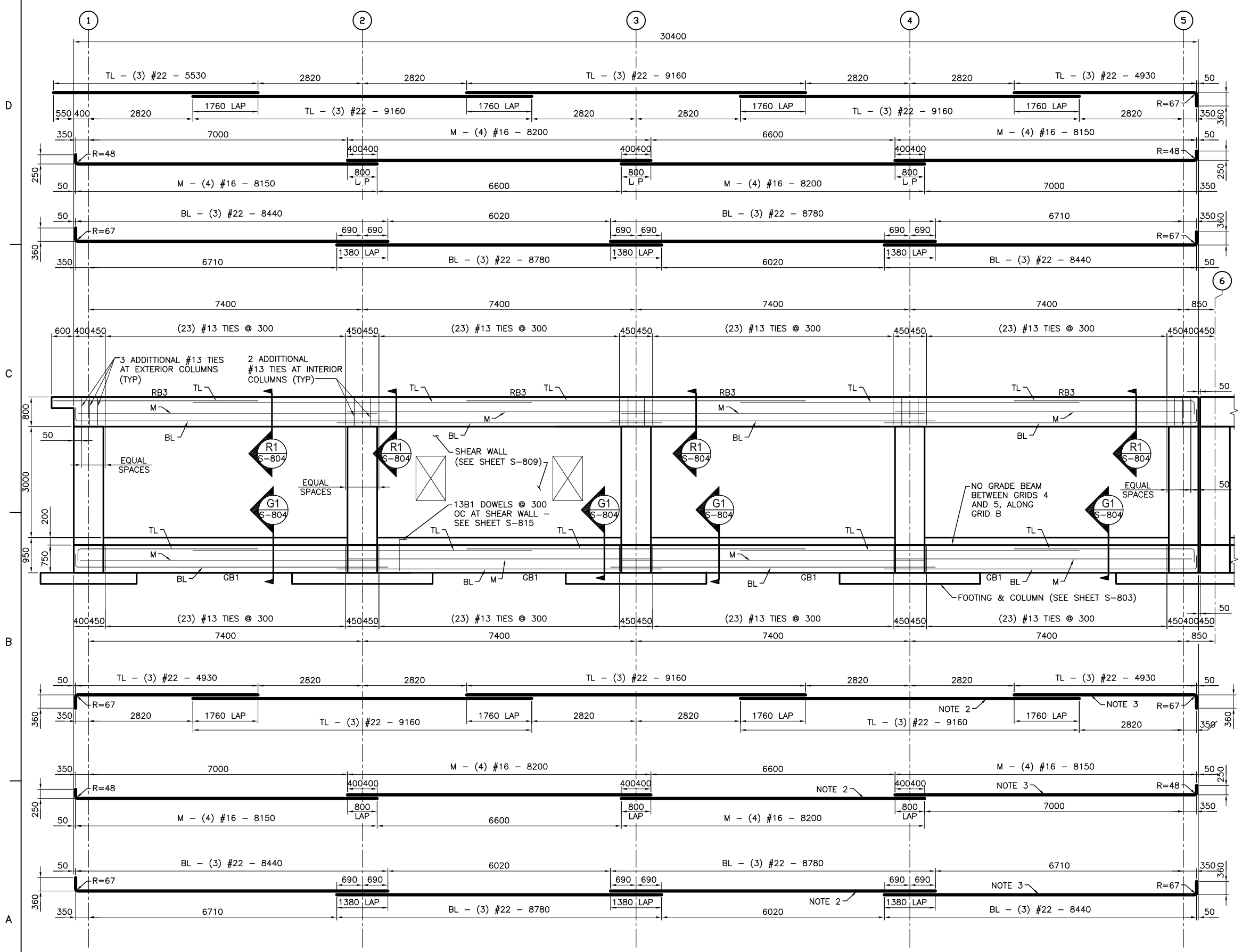

BEAM ELEVATION ALONG GRID LINES B AND C
SCALE: NONE

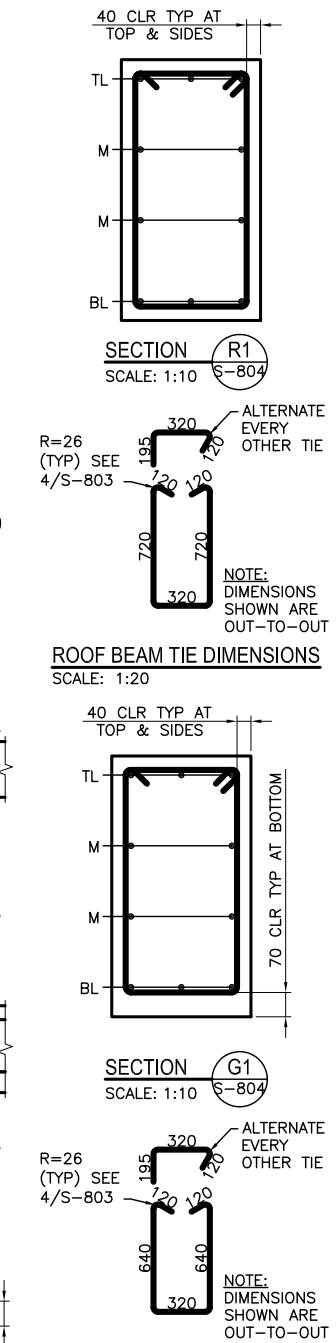

ROOF BEAM TIE DIMENSIONS
SCALE: 1:20

GRADE BEAM TIE DIMENSIONS
SCALE: 1:20

ABBREVIATION LEGEND

RB = ROOF BEAM
GB = GRADE BEAM
TL = BEAM TOP REINFORCEMENT BARS
BL = BEAM BOTTOM REINFORCEMENT BARS
M = BEAM MIDDLE REINFORCEMENT BARS

NOTES:

1. REBAR DETAIL AND PLACEMENT DRAWINGS (800 SERIES) ARE PROVIDED FOR INFORMATION ONLY. REBAR PLACEMENT AND DETAIL DRAWINGS SHALL BE CHECKED AND VALIDATED BY CONSTRUCTION CONTRACTOR.
2. DELETE NOTED BARS ON GRID LINE B.
3. SHIFT END BARS TO ROWS ON GRID LINE B.
4. PROVIDE #16 X 1600 DOWELS CAST INTO GRADE BEAMS SPACED TO MATCH MASONRY WALL VERTICAL REINFORCING. TOP OF DOWEL ELEV +800.

UNLESS NOTED OTHERWISE, LINEAR DIMENSIONS SHOWN ARE IN MILLIMETERS.

US ARMY CORPS OF ENGINEERS
AFGHANISTAN ENGINEER DISTRICT

Mark	Description	Date	Appr.	Mark	Description	Date	Appr.

Designed by: Dwn by: Ckd by: Reviewed by: Submitted by:
Date: 5/19/10 Rev: 0
Design file no.
Drawing code:
File name: AF10248-SS804DT
Plot date: 2010/06/08
Plot scale:

U.S. ARMY ENGINEER DISTRICT, AFGHANISTAN
CORPS OF ENGINEERS
APO AE 96338

STANDARD DESIGN
VARIOUS PROJECTS
VARIOUS LOCATIONS, AFGHANISTAN

NCO BARRACKS

REBAR REINFORCEMENT DRAWINGS
BEAM ELEVATIONS – SHEET 1

SHEET REFERENCE NUMBER:
B
S-804

R:\ENGINEERING\26 STANDARD DESIGNS\A-E STANDARD DESIGNS\NCO BARRACKS\AF10248-SS804DT.DWG

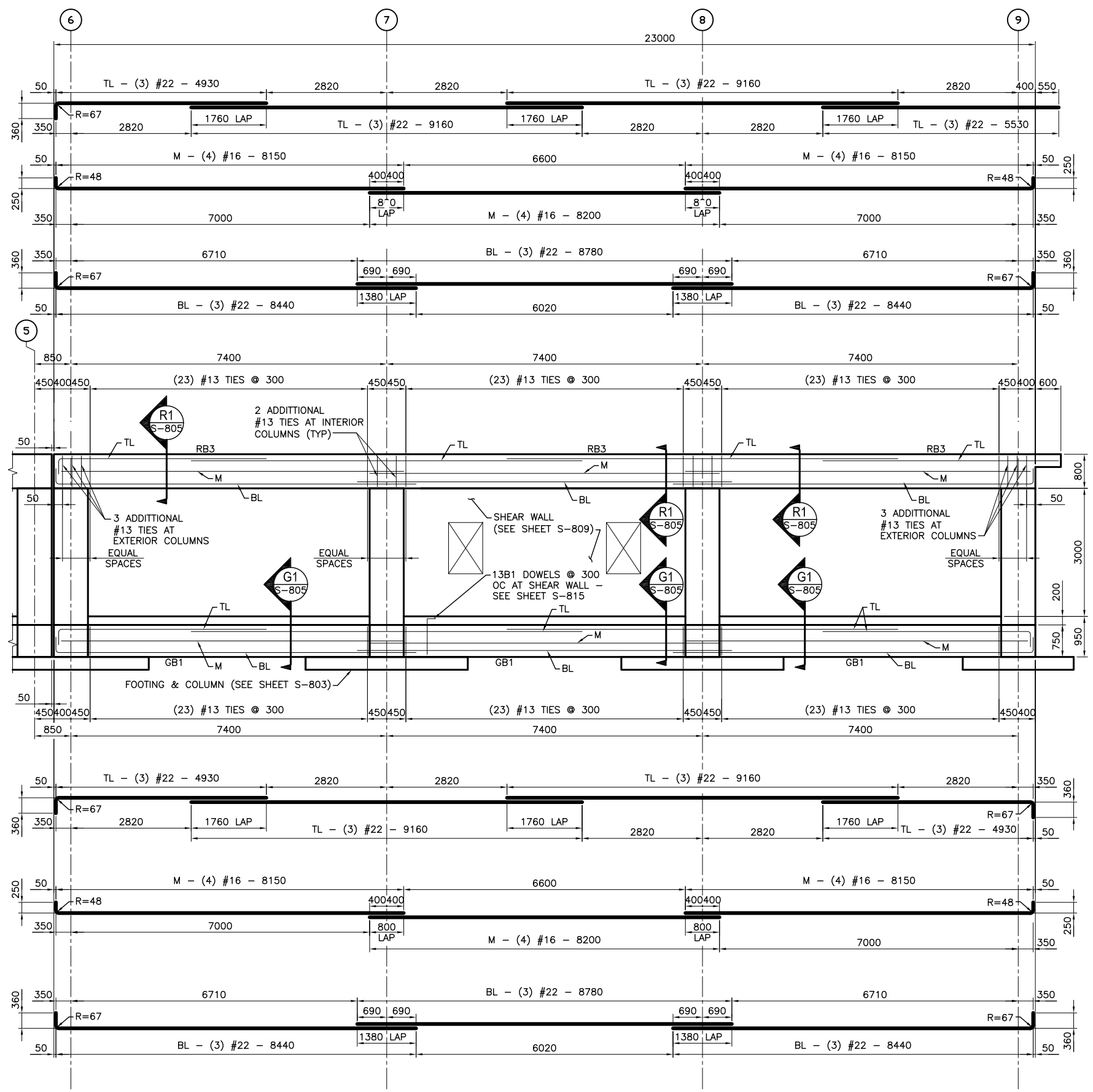

BEAM ELEVATION ALONG GRID LINES B AND C
SCALE: NONE

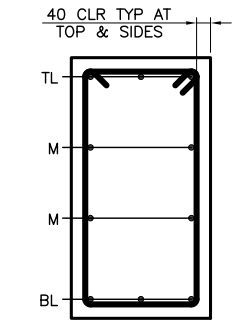

SECTION R1 S-805
SCALE: 1:10

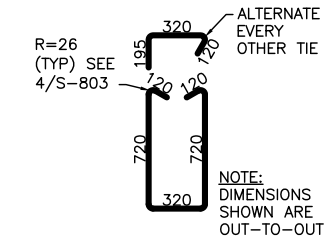

ROOF BEAM TIE DIMENSIONS
SCALE: 1:20

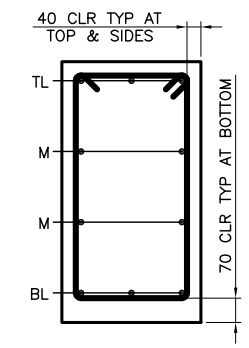

SECTION G1 S-805
SCALE: 1:10

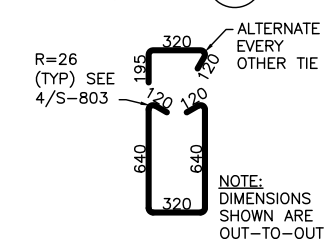

GRADE BEAM TIE DIMENSIONS
SCALE: 1:20

ABBREVIATION LEGEND

RB = ROOF BEAM
GB = GRADE BEAM
TL = BEAM TOP REINFORCEMENT BARS
BL = BEAM BOTTOM REINFORCEMENT BARS
M = BEAM MIDDLE REINFORCEMENT BARS

NOTE:

1. REBAR DETAIL AND PLACEMENT DRAWINGS (800 SERIES) ARE PROVIDED FOR INFORMATION ONLY. REBAR PLACEMENT AND DETAIL DRAWINGS SHALL BE CHECKED AND VALIDATED BY CONSTRUCTION CONTRACTOR.
2. PROVIDE #16 X 1600 DOWELS CAST INTO GRADE BEAMS SPACED TO MATCH MASONRY WALL VERTICAL REINFORCING. TOP OF DOWEL ELEV +800.

0 .50 1.00
1:10
1 .50 0 1
1:20

UNLESS NOTED OTHERWISE, LINEAR DIMENSIONS SHOWN ARE IN MILLIMETERS.

US ARMY CORPS OF ENGINEERS
AFGHANISTAN ENGINEER DISTRICT

Mark	Description	Date	Appr.	Mark	Description	Date	Appr.

Designed by:
Dwn by: Ckd by:
Reviewed by:
Submitted by:
Date: 5/19/10 Rev: 0
Design file no.
Drawing code:
File name: AF10248-SS805DT
Plot date: 2010/06/06
Plot scale:

U.S. ARMY ENGINEER DISTRICT, AFGHANISTAN
CORPS OF ENGINEERS
APO AE 96338

STANDARD DESIGN
VARIOUS PROJECTS
VARIOUS LOCATIONS, AFGHANISTAN

NCO BARRACKS

REBAR REINFORCEMENT DRAWINGS
BEAM ELEVATIONS – SHEET 2

SHEET REFERENCE NUMBER:
B
S–805

R:\ENGINEERING\26 STANDARD DESIGNS\A-E STANDARD DESIGNS\NCO BARRACKS\AF10248-SS805DT.DWG

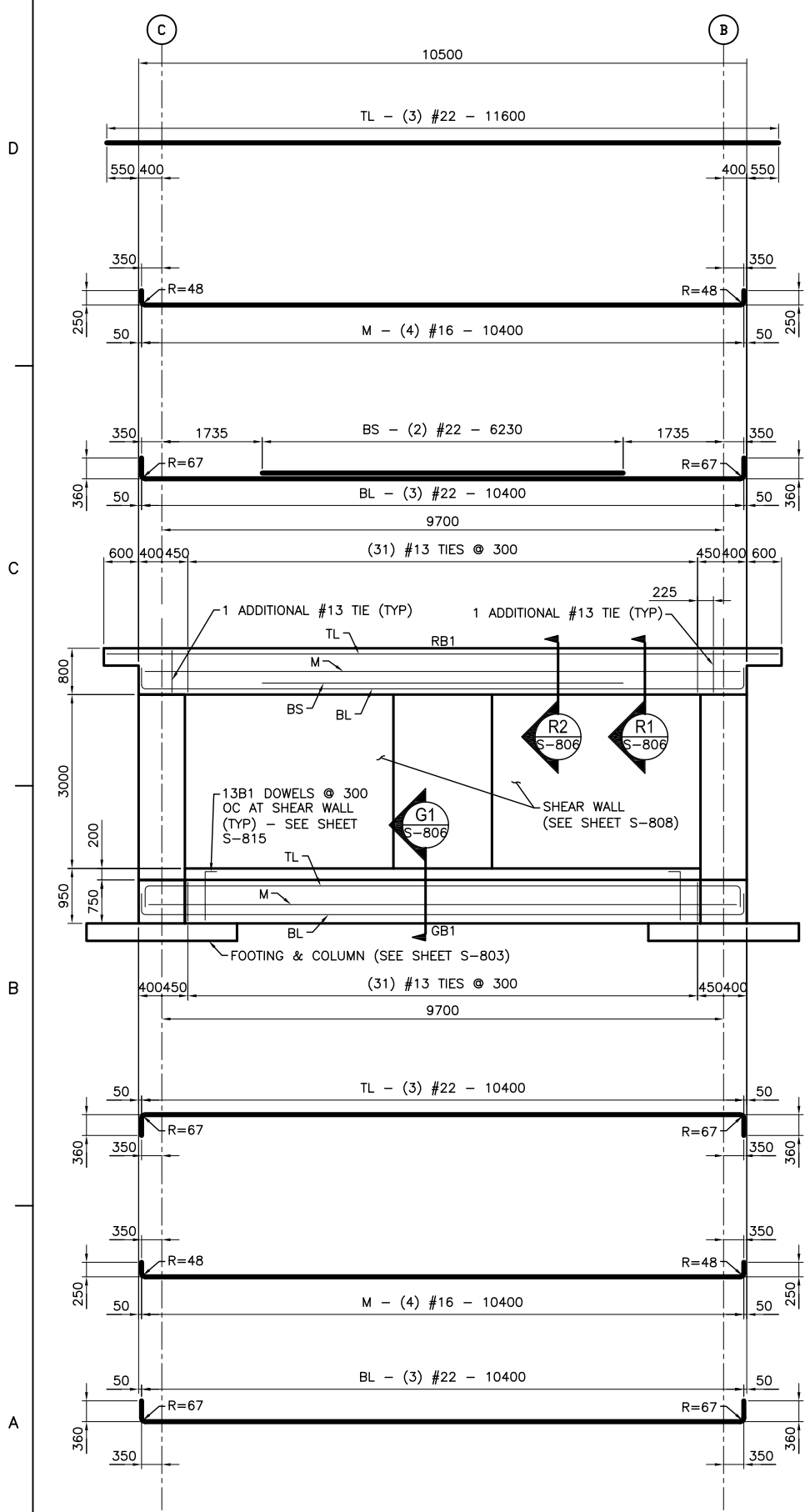

BEAM ELEVATION ALONG GRID LINES 1, 6 AND 9
SCALE: NONE

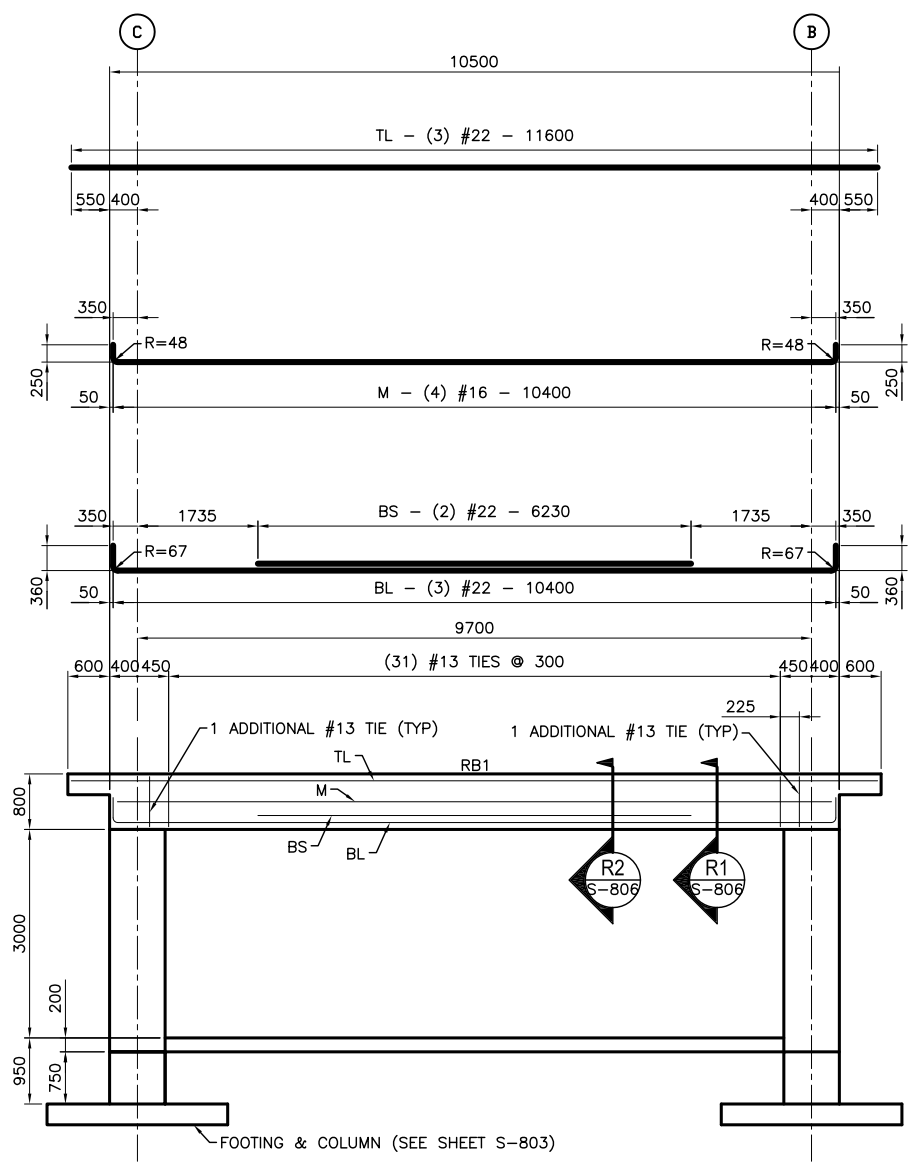

BEAM ELEVATION ALONG GRID LINES 2, 3, 7 AND 8
SCALE: NONE

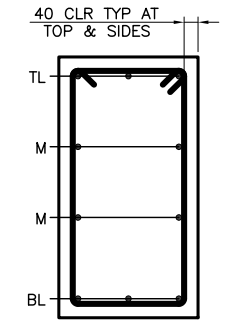

SECTION R1 S–806
SCALE: 1:10

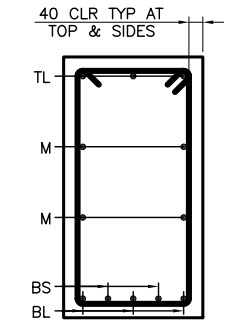

SECTION R2 S–806
SCALE: 1:10

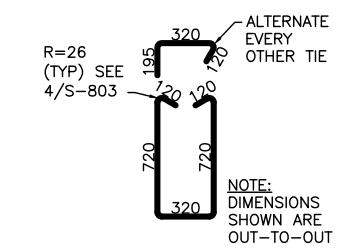

ROOF BEAM TIE DIMENSIONS
SCALE: 1:20

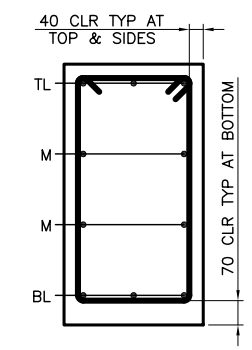

SECTION G1 S–806
SCALE: 1:10

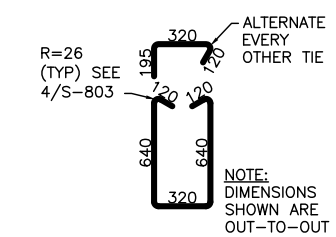

GRADE BEAM TIE DIMENSIONS
SCALE: 1:20

ABBREVIATION LEGEND

RB = ROOF BEAM
GB = GRADE BEAM
TL = BEAM TOP REINFORCEMENT BARS
BL = BEAM BOTTOM REINFORCEMENT BARS
BS = BEAM ADDITIONAL BOTTOM REINFORCEMENT BARS
M = BEAM MIDDLE REINFORCEMENT BARS

NOTE:

1. REBAR DETAIL AND PLACEMENT DRAWINGS (800 SERIES) ARE PROVIDED FOR INFORMATION ONLY. REBAR PLACEMENT AND DETAIL DRAWINGS SHALL BE CHECKED AND VALIDATED BY CONSTRUCTION CONTRACTOR.
2. PROVIDE #16 X 1600 DOWELS CAST INTO GRADE BEAMS SPACED TO MATCH MASONRY WALL VERTICAL REINFORCING. TOP OF DOWEL ELEV +800.

0 .50 1.00
1:10
1 .50 0 1
1:20

UNLESS NOTED OTHERWISE, LINEAR DIMENSIONS SHOWN ARE IN MILLIMETERS.

US ARMY CORPS OF ENGINEERS
AFGHANISTAN ENGINEER DISTRICT

Mark	Description	Date	Appr.	Mark	Description	Date	Appr.

Rev: 0
Date: 5/19/10
Designed by: Dwn by: Ckd by: Reviewed by: Submitted by:
Design file no.
Drawing code:
File name: AF1024B-SS806DT
Plot date: 2010/06/06
Plot scale:

U.S. ARMY ENGINEER DISTRICT, AFGHANISTAN
CORPS OF ENGINEERS
APO AE 96338

STANDARD DESIGN
VARIOUS PROJECTS
VARIOUS LOCATIONS, AFGHANISTAN

NCO BARRACKS

REBAR REINFORCEMENT DRAWINGS
BEAM ELEVATIONS – SHEET 3

SHEET REFERENCE NUMBER:
B
S–806

R:\ENGINEERING\26 STANDARD DESIGNS\A–E STANDARD DESIGNS\NCO BARRACKS\AF1024B–SS806DT.DWG

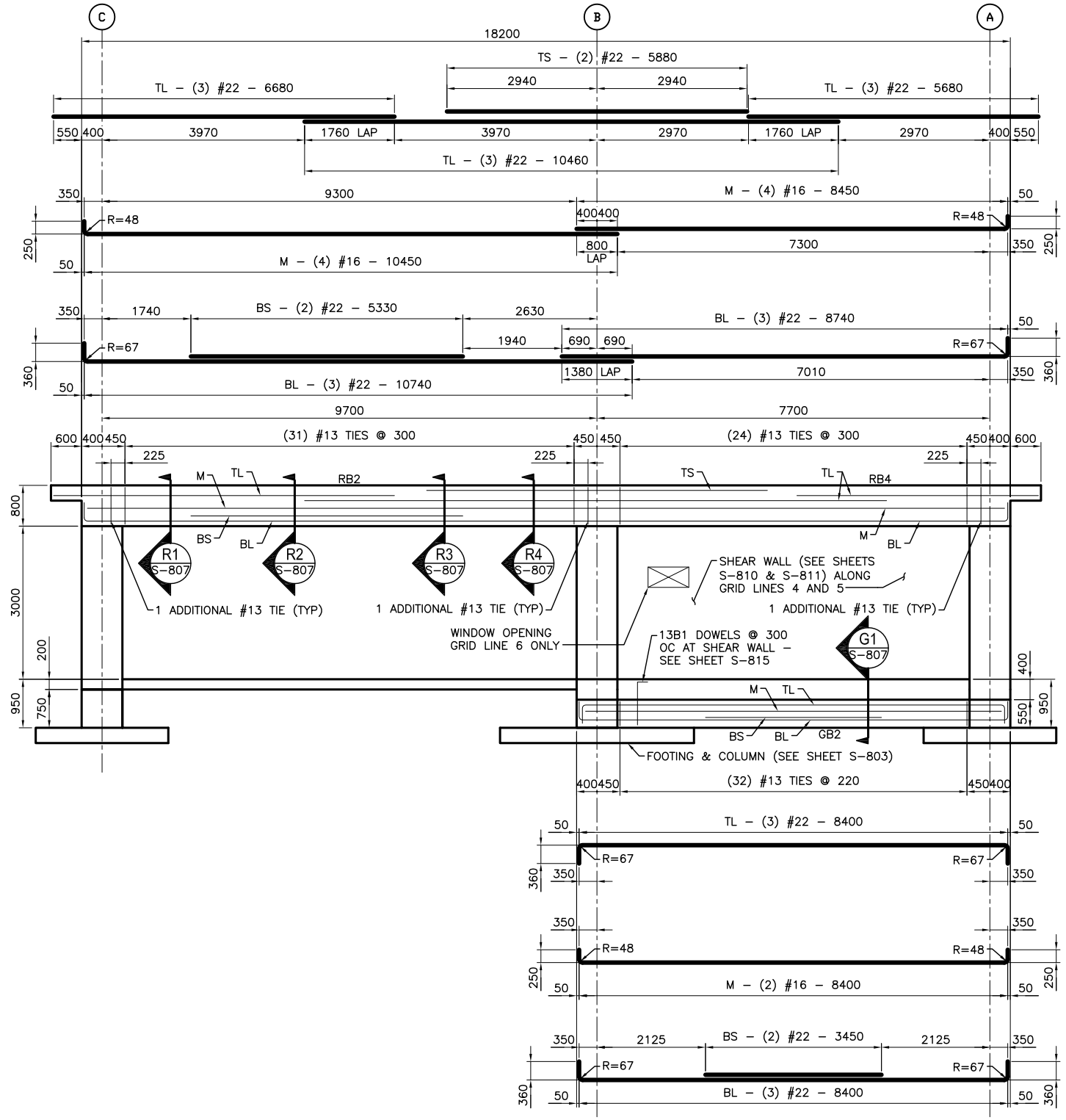

BEAM ELEVATION ALONG GRID LINES 4 AND 5
SCALE: NONE

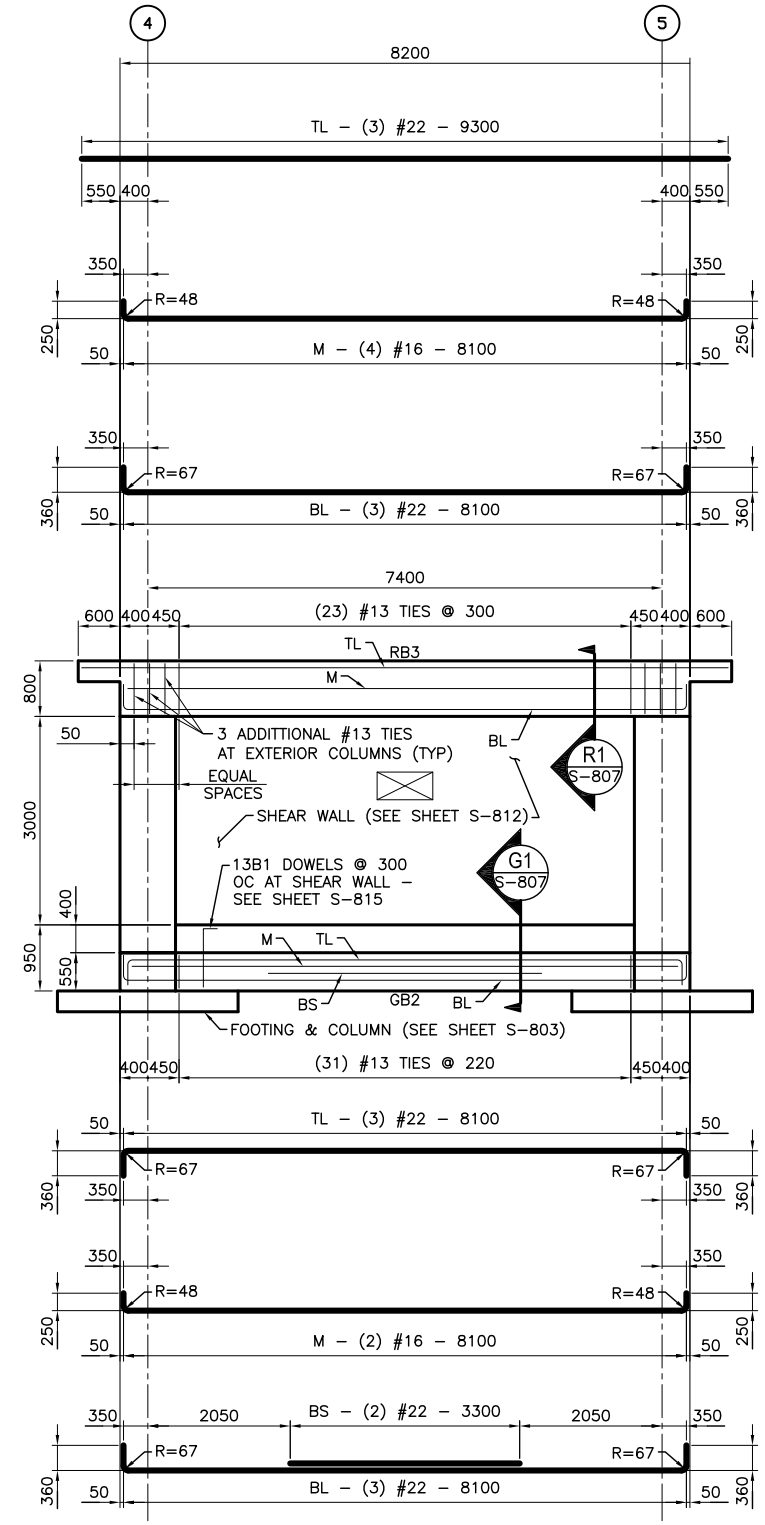

BEAM ELEVATION ALONG GRID LINE A
SCALE: NONE

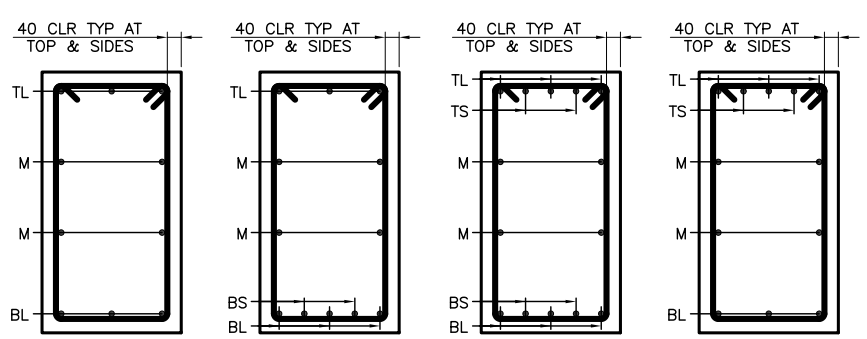

SECTION R1 S-807
SCALE: 1:10

SECTION R2 S-807
SCALE: 1:10

SECTION R3 S-807
SCALE: 1:10

SECTION R4 S-807
SCALE: 1:10

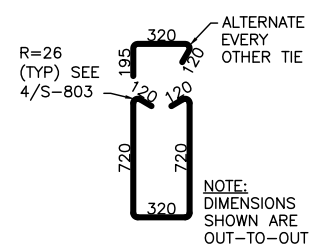

ROOF BEAM TIE DIMENSIONS
SCALE: 1:20

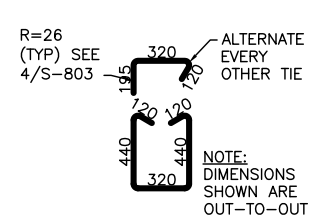

GRADE BEAM TIE DIMENSIONS
SCALE: 1:20

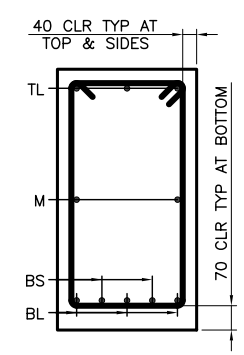

SECTION G1 S-807
SCALE: 1:10

ABBREVIATION LEGEND

RB = ROOF BEAM
GB = GRADE BEAM
TL = BEAM TOP REINFORCEMENT BARS
TS = BEAM ADDITIONAL TOP REINFORCEMENT BARS
BL = BEAM BOTTOM REINFORCEMENT BARS
BS = BEAM ADDITIONAL BOTTOM REINFORCEMENT BARS
M = BEAM MIDDLE REINFORCEMENT BARS

NOTE:

1. REBAR DETAIL AND PLACEMENT DRAWINGS (800 SERIES) ARE PROVIDED FOR INFORMATION ONLY. REBAR PLACEMENT AND DETAIL DRAWINGS SHALL BE CHECKED AND VALIDATED BY CONSTRUCTION CONTRACTOR.
2. PROVIDE #16 X 1600 DOWELS CAST INTO GRADE BEAMS SPACED TO MATCH MASONRY WALL VERTICAL REINFORCING. TOP OF DOWEL ELEV +800.

0 .50 1.00
1:10
1 .50 0 1
1:20

UNLESS NOTED OTHERWISE, LINEAR DIMENSIONS SHOWN ARE IN MILLIMETERS.

US ARMY CORPS OF ENGINEERS
AFGHANISTAN ENGINEER DISTRICT

Mark	Description	Date	Appr.	Mark	Description	Date	Appr.

Designed by: Dwn by: Ckd by: Reviewed by: Submitted by:
Date: 5/19/10 Rev: 0
Design file no.
Drawing code:
File name: AF10248-SS807DT
Plot date: 2010/06/06
Plot scale:

U.S. ARMY ENGINEER DISTRICT, AFGHANISTAN
CORPS OF ENGINEERS
APO AE 96338

STANDARD DESIGN
VARIOUS PROJECTS
VARIOUS LOCATIONS, AFGHANISTAN

NCO BARRACKS

REBAR REINFORCEMENT DRAWINGS
BEAM ELEVATIONS – SHEET 4

SHEET REFERENCE NUMBER:
B
S-807

R:\ENGINEERING\26 STANDARD DESIGNS\A-E STANDARD DESIGNS\NCO BARRACKS\AF10248-SS807DT.DWG

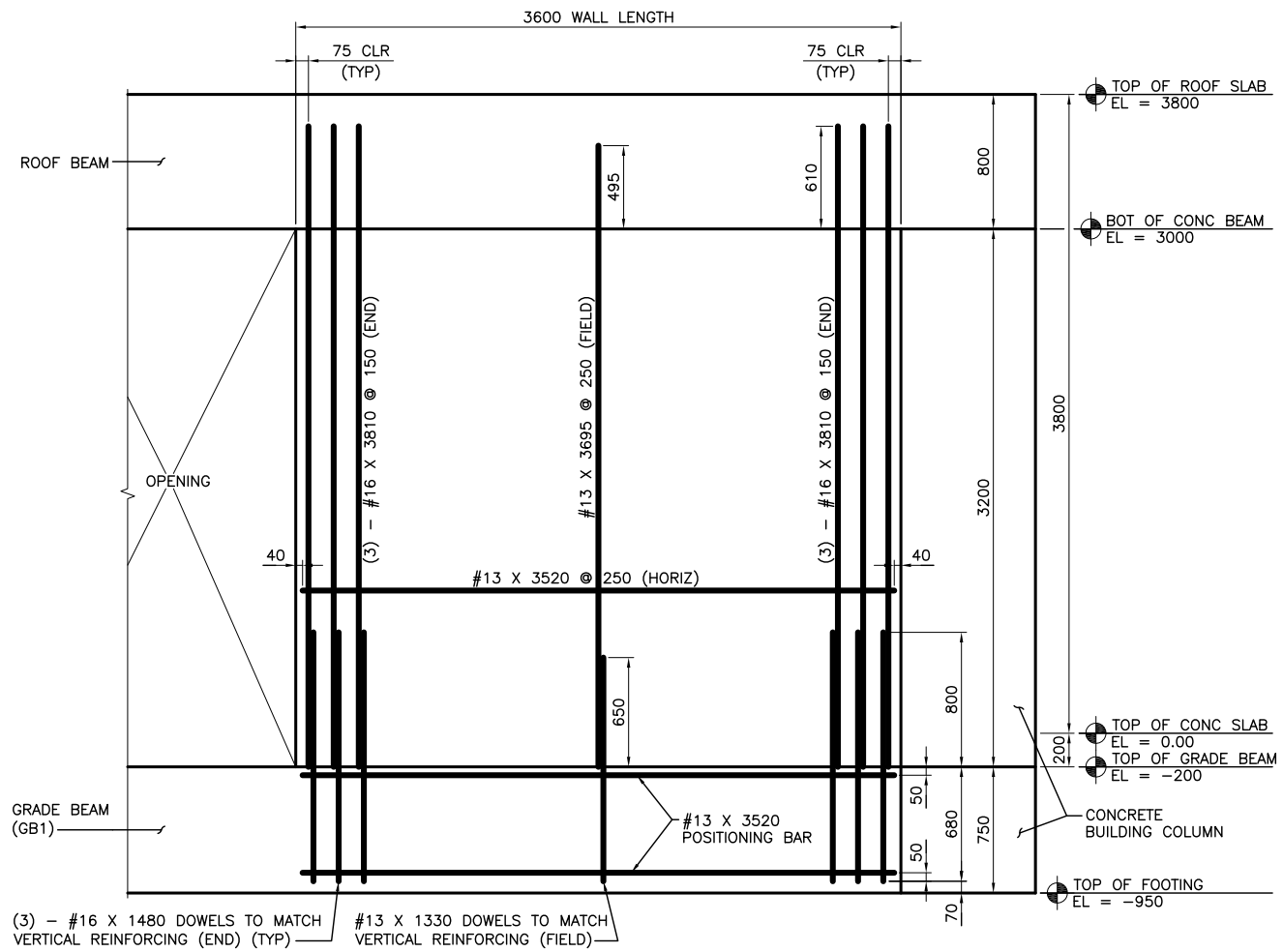

SHEAR WALL "SW1"
SCALE: 1:20

NOTES:

1. REBAR DETAIL AND PLACEMENT DRAWINGS (800 SERIES) ARE PROVIDED FOR INFORMATION ONLY. REBAR PLACEMENT AND DETAIL DRAWINGS SHALL BE CHECKED AND VALIDATED BY CONSTRUCTION CONTRACTOR.
2. CUT FIELD HORIZONTAL BARS AS REQUIRED TO FIT EACH SIDE OF OPENINGS.
3. CUT FIELD VERTICAL BARS AS REQUIRED TO FIT ABOVE AND BELOW OPENINGS.

1 .50 0 1
1:20

UNLESS NOTED OTHERWISE, LINEAR DIMENSIONS SHOWN ARE IN MILLIMETERS.

US ARMY CORPS OF ENGINEERS
AFGHANISTAN ENGINEER DISTRICT

Mark	Description	Date	Appr.	Mark	Description	Date	Appr.

U.S. ARMY ENGINEER DISTRICT, AFGHANISTAN
CORPS OF ENGINEERS
APO AE 96338

Designed by: Date: 5/19/10 Rev: 0
Dwn by: Ckd by: Design file no.
Reviewed by: Drawing code:
Submitted by: File name: AF10248-SS808DT
Plot date: 2010/06/08
Plot scale:

STANDARD DESIGN
VARIOUS PROJECTS
VARIOUS LOCATIONS, AFGHANISTAN

NCO BARRACKS

REBAR REINFORCEMENT DRAWINGS
SHEAR WALL ELEVATIONS – SHEET 1

SHEET REFERENCE NUMBER:
B
S–808

R:\ENGINEERING\26 STANDARD DESIGNS\A–E STANDARD DESIGNS\NCO BARRACKS\AF10248–SS808DT.DWG

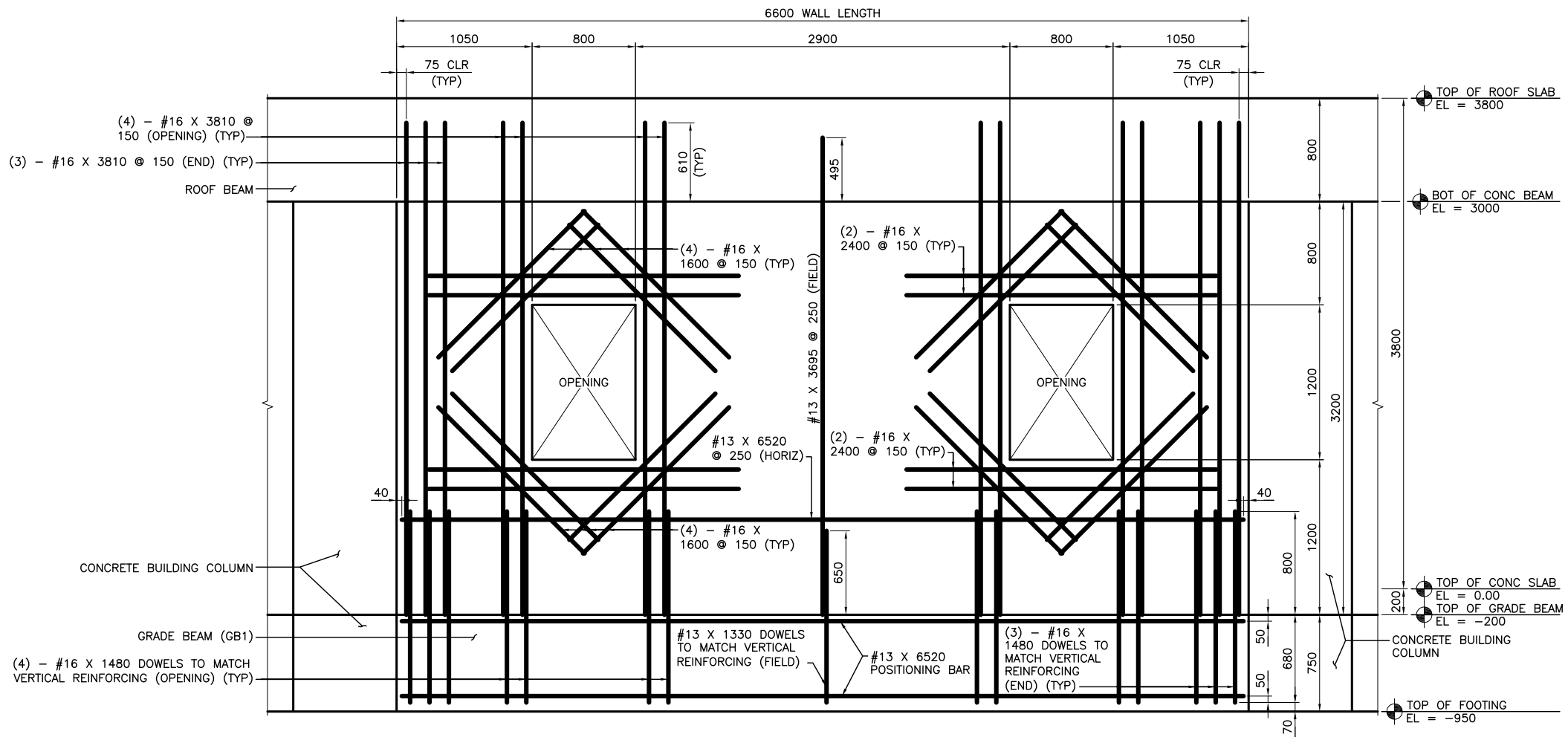

SHEAR WALL "SW2"
SCALE: 1:20

NOTES:

1. REBAR DETAIL AND PLACEMENT DRAWINGS (800 SERIES) ARE PROVIDED FOR INFORMATION ONLY. REBAR PLACEMENT AND DETAIL DRAWINGS SHALL BE CHECKED AND VALIDATED BY CONSTRUCTION CONTRACTOR.
2. CUT FIELD HORIZONTAL BARS AS REQUIRED TO FIT EACH SIDE OF OPENINGS.
3. CUT FIELD VERTICAL BARS AS REQUIRED TO FIT ABOVE AND BELOW OPENINGS.

1 .50 0 1
1:20

UNLESS NOTED OTHERWISE, LINEAR DIMENSIONS SHOWN ARE IN MILLIMETERS.

US ARMY CORPS OF ENGINEERS
AFGHANISTAN ENGINEER DISTRICT

Mark	Description	Date	Appr.	Mark	Description	Date	Appr.

Designed by: Dwn by: Ckd by: Reviewed by: Submitted by:
Date: 5/19/10 Rev: 0
Design file no.
Drawing code:
File name: AF10248-SS809DT
Plot date: 2010/06/08
Plot scale:

U.S. ARMY ENGINEER DISTRICT, AFGHANISTAN
CORPS OF ENGINEERS
APO AE 96338

STANDARD DESIGN
VARIOUS PROJECTS
VARIOUS LOCATIONS, AFGHANISTAN

NCO BARRACKS

REBAR REINFORCEMENT DRAWINGS
SHEAR WALL ELEVATIONS – SHEET 2

SHEET REFERENCE NUMBER:
B
S–809

R:\ENGINEERING\26 STANDARD DESIGNS\A-E STANDARD DESIGNS\NCO BARRACKS\AF10248-SS809DT.DWG

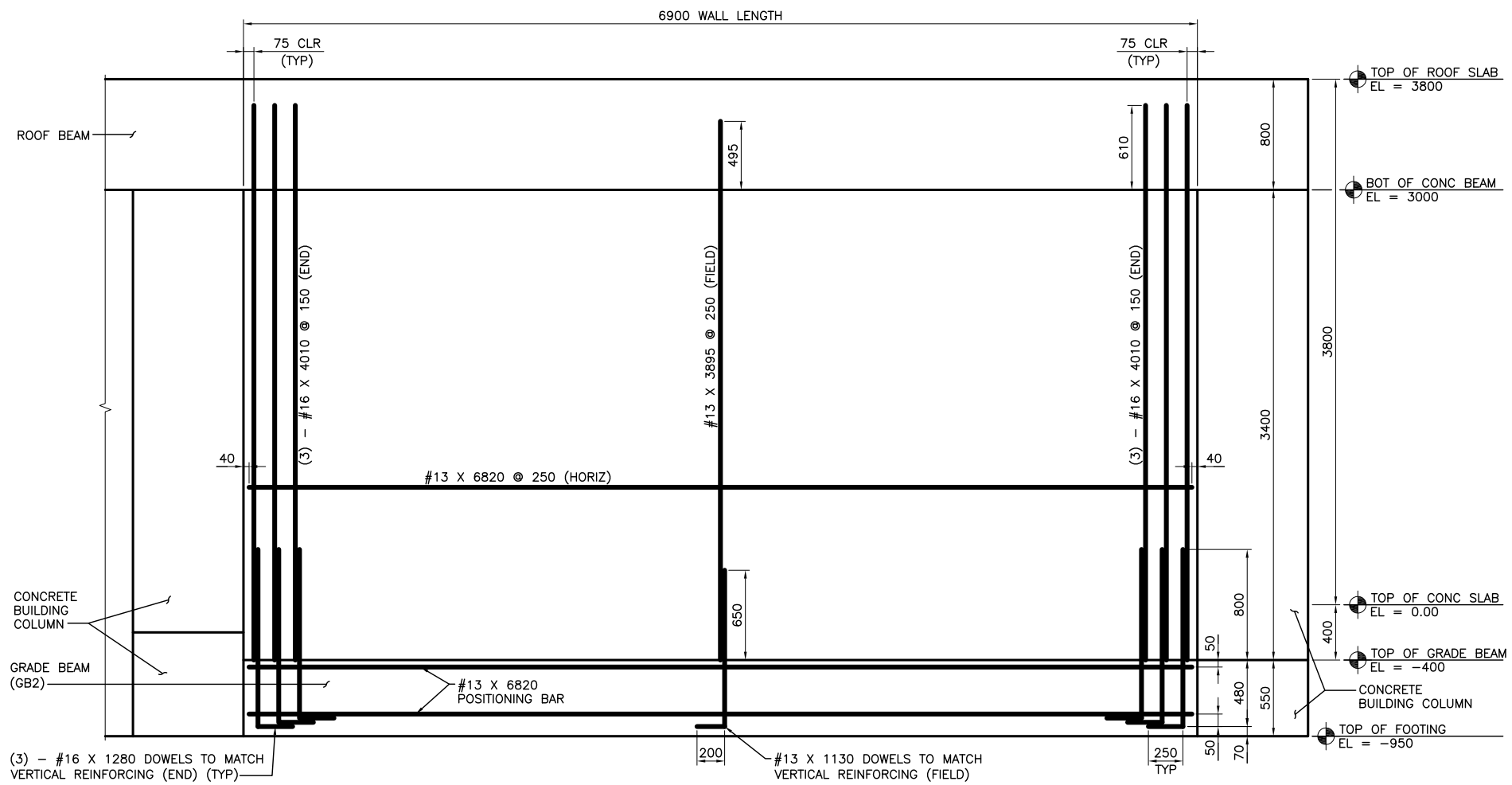

SHEAR WALL "SW3"
SCALE: 1:20

NOTES:

1. REBAR DETAIL AND PLACEMENT DRAWINGS (800 SERIES) ARE PROVIDED FOR INFORMATION ONLY. REBAR PLACEMENT AND DETAIL DRAWINGS SHALL BE CHECKED AND VALIDATED BY CONSTRUCTION CONTRACTOR.
2. CUT FIELD HORIZONTAL BARS AS REQUIRED TO FIT EACH SIDE OF OPENINGS.
3. CUT FIELD VERTICAL BARS AS REQUIRED TO FIT ABOVE AND BELOW OPENINGS.

1 .50 0 1
1:20

UNLESS NOTED OTHERWISE, LINEAR DIMENSIONS SHOWN ARE IN MILLIMETERS.

US ARMY CORPS OF ENGINEERS
AFGHANISTAN ENGINEER DISTRICT

Mark	Description	Date	Appr.	Mark	Description	Date	Appr.

U.S. ARMY ENGINEER DISTRICT, AFGHANISTAN
CORPS OF ENGINEERS
APO AE 96338

Designed by: | Date: 5/19/10 | Rev: 0
Dwn by: | Ckd by: | Design file no.
Reviewed by: | Drawing code:
Submitted by: | File name: AF10248-SS810DT
Plot date: 2010/06/08
Plot scale:

STANDARD DESIGN
VARIOUS PROJECTS
VARIOUS LOCATIONS, AFGHANISTAN

NCO BARRACKS

REBAR REINFORCEMENT DRAWINGS
SHEAR WALL ELEVATIONS – SHEET 3

SHEET REFERENCE NUMBER:
B
S–810

R:\ENGINEERING\26 STANDARD DESIGNS\A-E STANDARD DESIGNS\NCO BARRACKS\AF10248-SS810DT.DWG

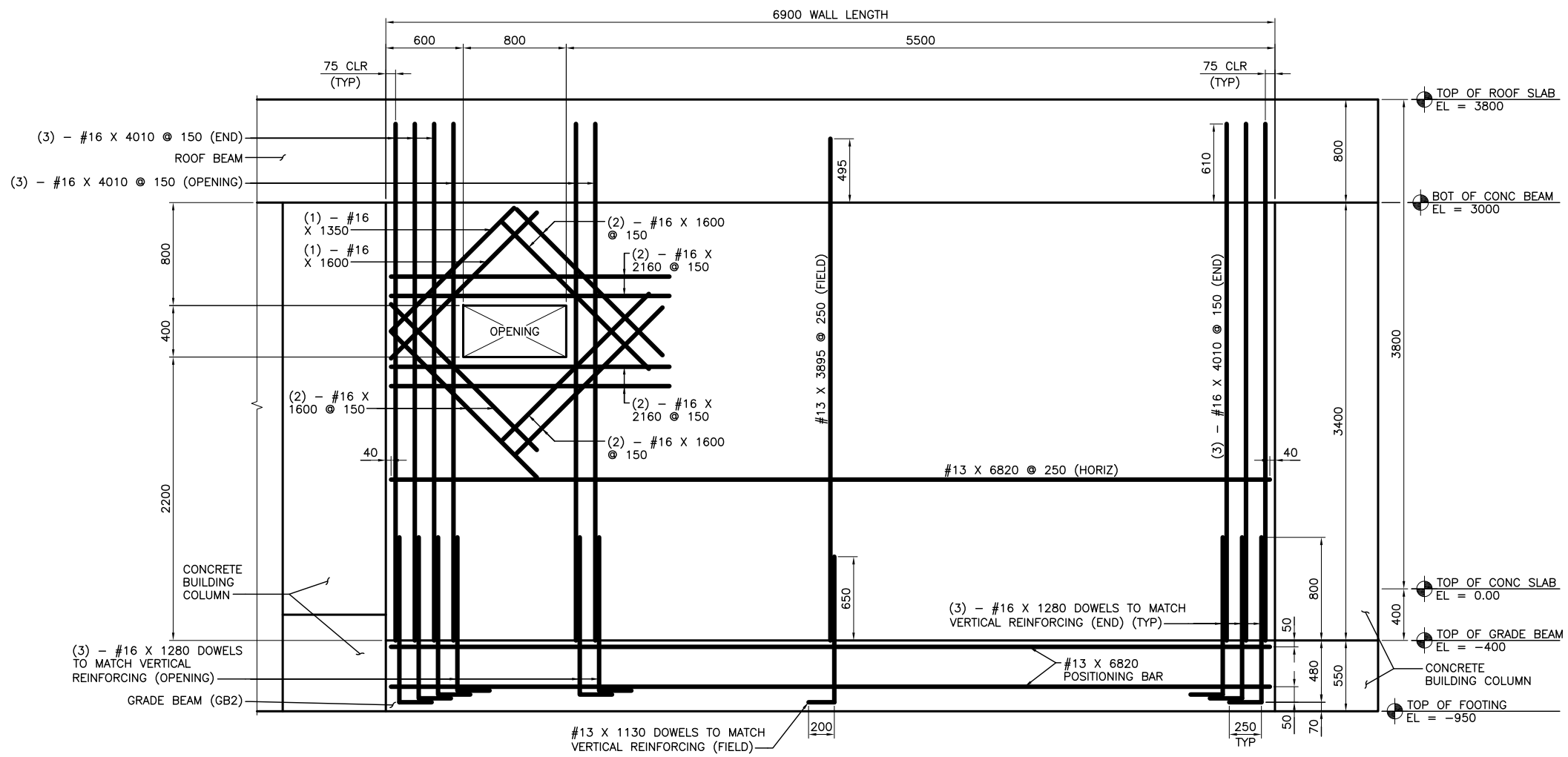

SHEAR WALL "SW4"
SCALE: 1:20

NOTES:

1. REBAR DETAIL AND PLACEMENT DRAWINGS (800 SERIES) ARE PROVIDED FOR INFORMATION ONLY. REBAR PLACEMENT AND DETAIL DRAWINGS SHALL BE CHECKED AND VALIDATED BY CONSTRUCTION CONTRACTOR.
2. CUT FIELD HORIZONTAL BARS AS REQUIRED TO FIT EACH SIDE OF OPENINGS.
3. CUT FIELD VERTICAL BARS AS REQUIRED TO FIT ABOVE AND BELOW OPENINGS.

1 .50 0 1
1:20

UNLESS NOTED OTHERWISE, LINEAR DIMENSIONS SHOWN ARE IN MILLIMETERS.

US ARMY CORPS OF ENGINEERS
AFGHANISTAN ENGINEER DISTRICT

Mark	Description	Date	Appr.	Mark	Description	Date	Appr.

U.S. ARMY ENGINEER DISTRICT, AFGHANISTAN
CORPS OF ENGINEERS
APO AE 96338

Designed by: Date: 5/19/10 Rev: 0
Dwn by: Ckd by: Design file no.
Reviewed by: Drawing code:
Submitted by: File name: AF10248-SS811DT
Plot date: 2010/06/08
Plot scale:

STANDARD DESIGN
VARIOUS PROJECTS
VARIOUS LOCATIONS, AFGHANISTAN

NCO BARRACKS

REBAR REINFORCEMENT DRAWINGS
SHEAR WALL ELEVATIONS – SHEET 4

SHEET REFERENCE NUMBER:
B
S–811

R:\ENGINEERING\26 STANDARD DESIGNS\A-E STANDARD DESIGNS\NCO BARRACKS\AF10248-SS811DT.DWG

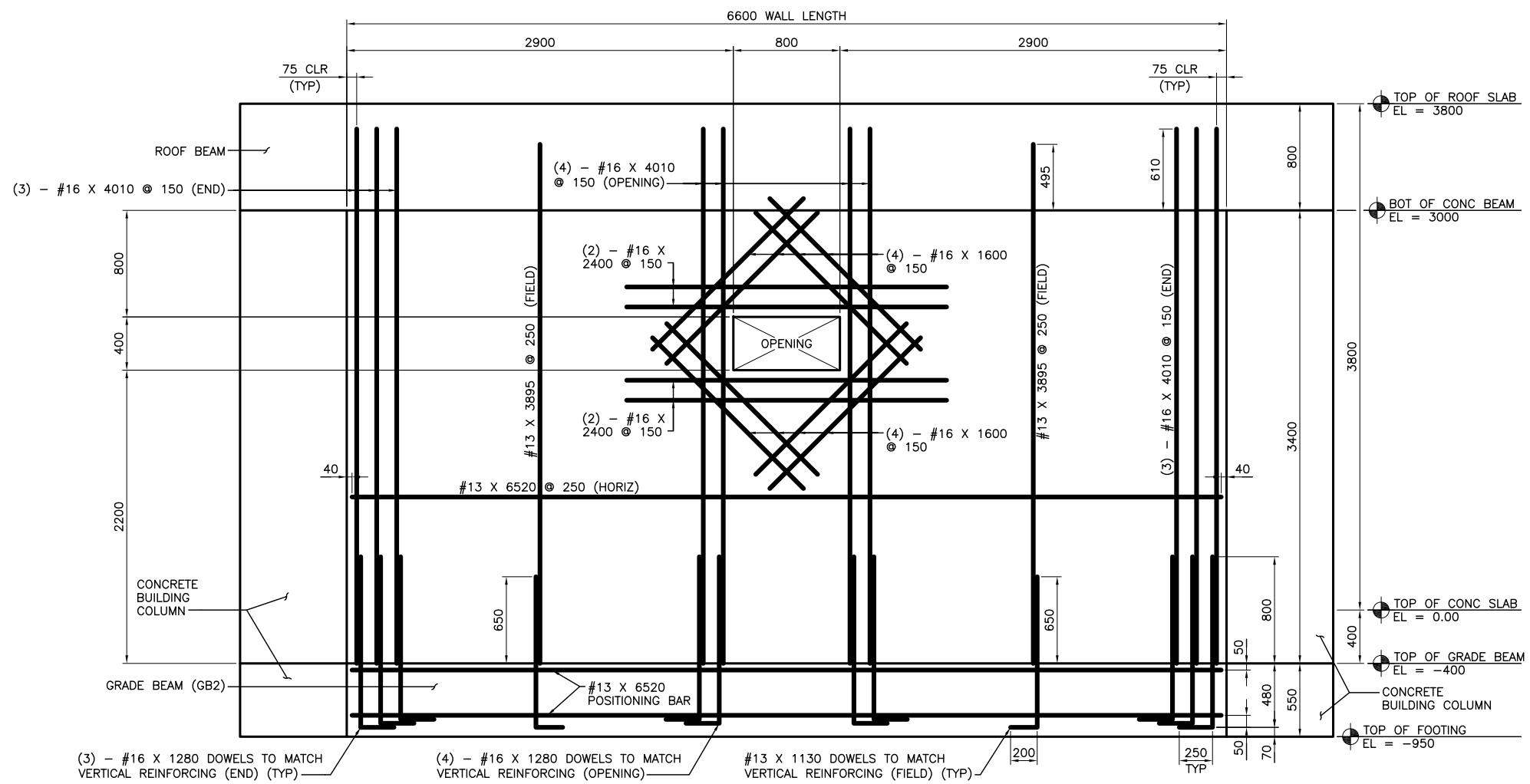

SHEAR WALL "SW5"
SCALE: 1:20

NOTES:

1. REBAR DETAIL AND PLACEMENT DRAWINGS (800 SERIES) ARE PROVIDED FOR INFORMATION ONLY. REBAR PLACEMENT AND DETAIL DRAWINGS SHALL BE CHECKED AND VALIDATED BY CONSTRUCTION CONTRACTOR.
2. CUT FIELD HORIZONTAL BARS AS REQUIRED TO FIT EACH SIDE OF OPENINGS.
3. CUT FIELD VERTICAL BARS AS REQUIRED TO FIT ABOVE AND BELOW OPENINGS.

1 .50 0 1
1:20

UNLESS NOTED OTHERWISE, LINEAR DIMENSIONS SHOWN ARE IN MILLIMETERS.

US ARMY CORPS OF ENGINEERS
AFGHANISTAN ENGINEER DISTRICT

Mark	Description	Date	Appr.	Mark	Description	Date	Appr.

U.S. ARMY ENGINEER DISTRICT, AFGHANISTAN
CORPS OF ENGINEERS
APO AE 96338

Designed by:
Dwn by: Ckd by:
Reviewed by:
Submitted by:
Date: 5/19/10
Rev: 0
Design file no.
Drawing code:
File name: AF1024B-SS812DT
Plot date: 2010/06/08
Plot scale:

STANDARD DESIGN
VARIOUS PROJECTS
VARIOUS LOCATIONS, AFGHANISTAN

NCO BARRACKS

REBAR REINFORCEMENT DRAWINGS
SHEAR WALL ELEVATIONS – SHEET 5

SHEET REFERENCE NUMBER:
B
S–812

R:\ENGINEERING\26 STANDARD DESIGNS\A-E STANDARD DESIGNS\NCO BARRACKS\AF1024B-SS812DT.DWG

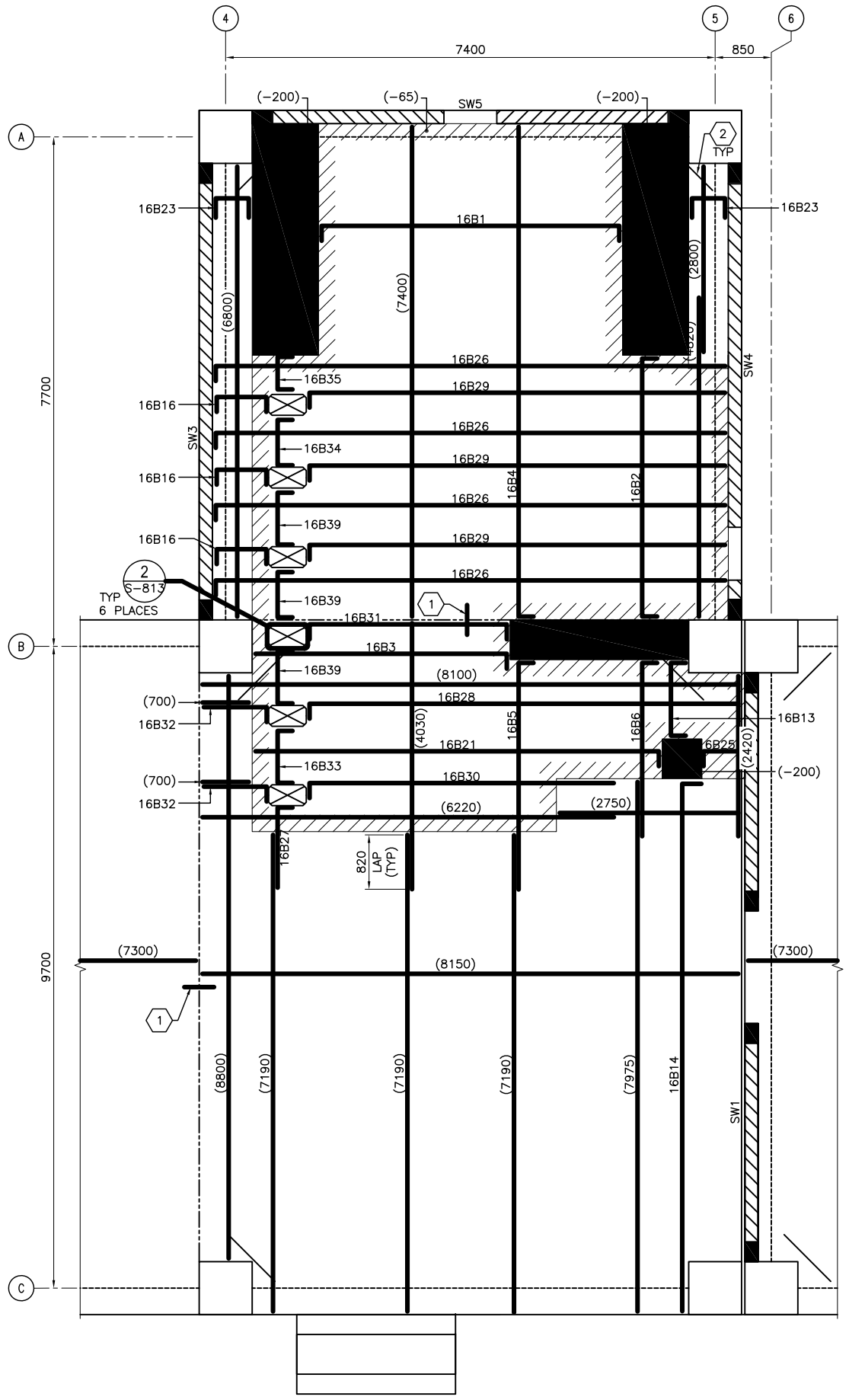

ENLARGED SLAB REINFORCING PLAN - TOP BARS (1 / S−813)

SCALE: 1:40

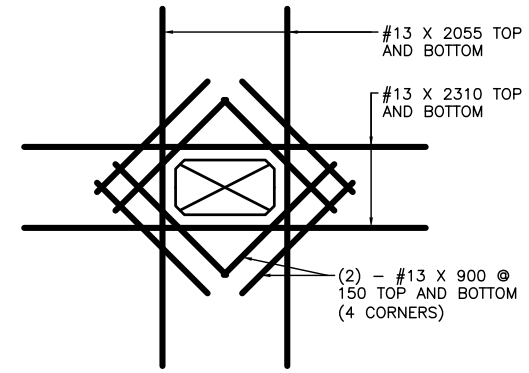

LATRINE OPENING REINFORCING DETAIL (2 / S−813)

SCALE: 1:20

NOTES:

1. REBAR DETAIL AND PLACEMENT DRAWINGS (800 SERIES) ARE PROVIDED FOR INFORMATION ONLY. REBAR PLACEMENT AND DETAIL DRAWINGS SHALL BE CHECKED AND VALIDATED BY CONSTRUCTION CONTRACTOR.
2. SEE SHEET S−815 FOR BAR BEND DETAILS.
3. PROVIDE #16 DOWELS EMBEDDED IN THICKENED FLOOR SLAB TO MATCH MASONRY WALL VERTICAL REINFORCING. DOWELS SHALL HAVE 800 LAP LENGTH AND 250 HOOKS ON BOTTOM. SEE SHEET S−501 FOR DETAILS.

FOUNDATION/SLAB PLAN KEY NOTES: (X)

1. #19 X 450 SMOOTH BAR @ 300 OC CENTERED @ CONSTRUCTION JOINT (SEE DETAIL 2/S−701)
2. (2) − #13 RE−ENTRANT CORNER BARS (SEE DETAIL 5/S−802)

FOUNDATION/SLAB PLAN LEGEND:

- SLAB REINFORCING TOP BARS #16 @ 300 UON
- REINFORCING CONCRETE SHEAR WALL
- CONTROL JOINT (SEE DETAIL 2/S−701)
- INDICATES DROP SLAB 65mm BELOW FINISH FLOOR
- INDICATES DROP SLAB 200mm BELOW FINISH FLOOR
- SLAB OPENING

1 .50 0 1
1:20

0 1 2 3 4
1:40

UNLESS NOTED OTHERWISE, LINEAR DIMENSIONS SHOWN ARE IN MILLIMETERS.

US ARMY CORPS OF ENGINEERS
AFGHANISTAN ENGINEER DISTRICT

Mark	Description	Date	Appr.	Mark	Description	Date	Appr.

Designed by: Date: 5/19/10 Rev: 0
Dwn by: Ckd by: Design file no.
Reviewed by: Drawing code:
Submitted by: File name: AF1024B-SS813DT Plot date: 2010/06/06 Plot scale:

U.S. ARMY ENGINEER DISTRICT, AFGHANISTAN
CORPS OF ENGINEERS
APO AE 96338

STANDARD DESIGN
VARIOUS PROJECTS
VARIOUS LOCATIONS, AFGHANISTAN

NCO BARRACKS

REBAR REINFORCEMENT DRAWINGS
ENLARGED SLAB PLAN − SHEET 1

SHEET REFERENCE NUMBER:
B
S−813

R:\ENGINEERING\26 STANDARD DESIGNS\A−E STANDARD DESIGNS\NCO BARRACKS\AF1024B−SS813DT.DWG

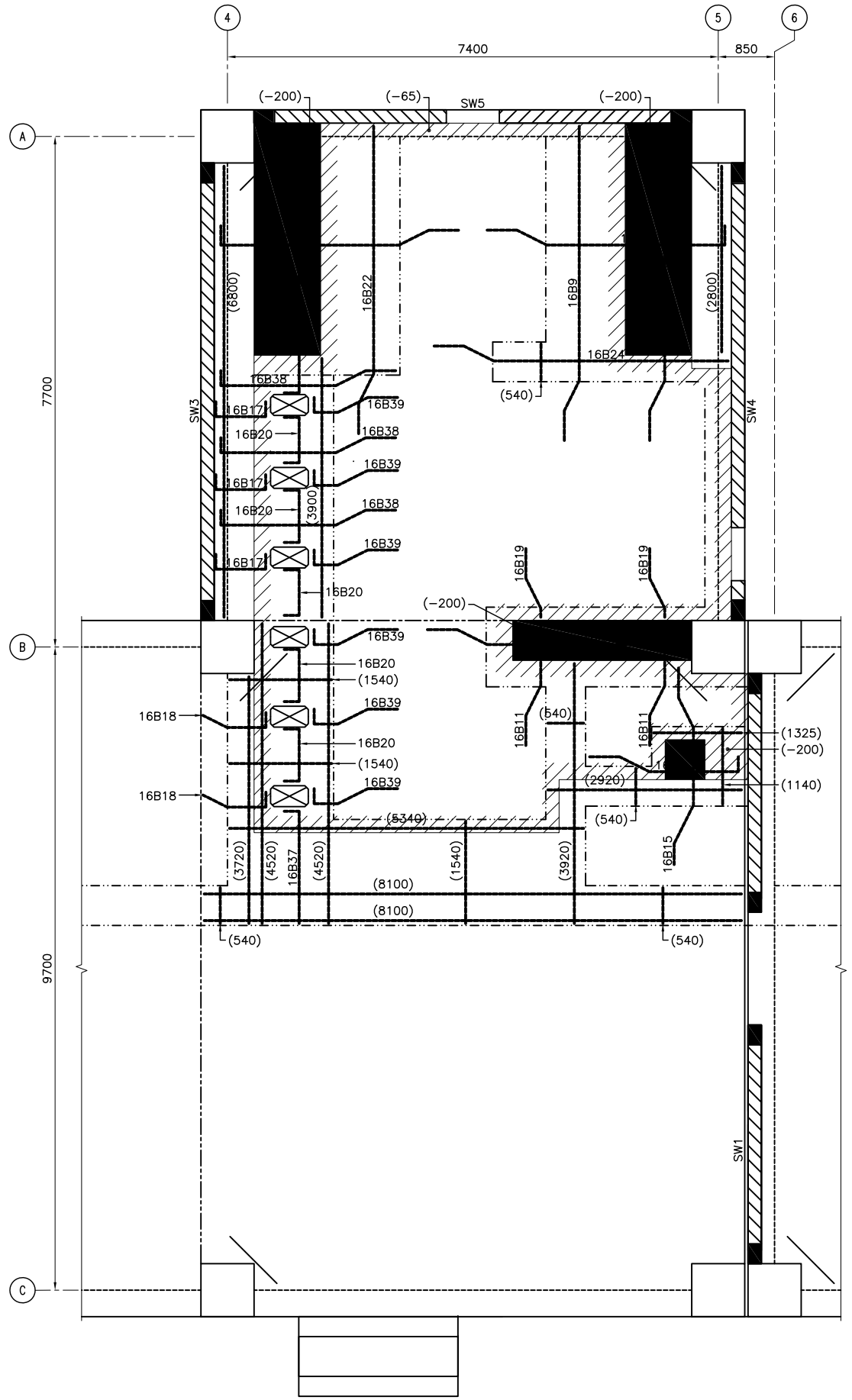

ENLARGED SLAB REINFORCING PLAN - BOTTOM BARS (1 / S-814)

SCALE: 1:40

NOTES:

1. REBAR DETAIL AND PLACEMENT DRAWINGS (800 SERIES) ARE PROVIDED FOR INFORMATION ONLY. REBAR PLACEMENT AND DETAIL DRAWINGS SHALL BE CHECKED AND VALIDATED BY CONSTRUCTION CONTRACTOR.
2. SEE SHEET S-815 FOR BAR BEND DETAILS.
3. PROVIDE #16 DOWELS EMBEDDED IN THICKENED FLOOR SLAB TO MATCH MASONRY WALL VERTICAL REINFORCING. DOWELS SHALL HAVE 800 LAP LENGTH AND 250 HOOKS ON BOTTOM. SEE SHEET S-501 FOR DETAILS.

FOUNDATION/SLAB PLAN LEGEND:

- SLAB REINFORCING BOTTOM BARS #16 @ 450 UON
- REINFORCING CONCRETE SHEAR WALL
- THICKENED SLAB
- CONTROL JOINT (SEE DETAIL 2/S-701)
- INDICATES DROP SLAB 65mm BELOW FINISH FLOOR
- INDICATES DROP SLAB 200mm BELOW FINISH FLOOR
- SLAB OPENING

0 1 2 3 4
1:40

UNLESS NOTED OTHERWISE, LINEAR DIMENSIONS SHOWN ARE IN MILLIMETERS.

US ARMY CORPS OF ENGINEERS
AFGHANISTAN ENGINEER DISTRICT

Mark	Description	Date	Appr.	Mark	Description	Date	Appr.

Designed by: | Date: 5/19/10 | Rev: 0
Dwn by: | Ckd by: | Design file no.
Reviewed by: | Drawing code:
Submitted by: | File name: AF1024B-SS814DT | Plot date: 2010/06/06 | Plot scale:

U.S. ARMY ENGINEER DISTRICT, AFGHANISTAN
CORPS OF ENGINEERS
APO AE 96338

STANDARD DESIGN
VARIOUS PROJECTS
VARIOUS LOCATIONS, AFGHANISTAN

NCO BARRACKS

REBAR REINFORCEMENT DRAWINGS
ENLARGED SLAB PLAN – SHEET 2

SHEET REFERENCE NUMBER:
B
S-814

R:\ENGINEERING\26 STANDARD DESIGNS\A-E STANDARD DESIGNS\NCO BARRACKS\AF1024B-SS814DT.DWG

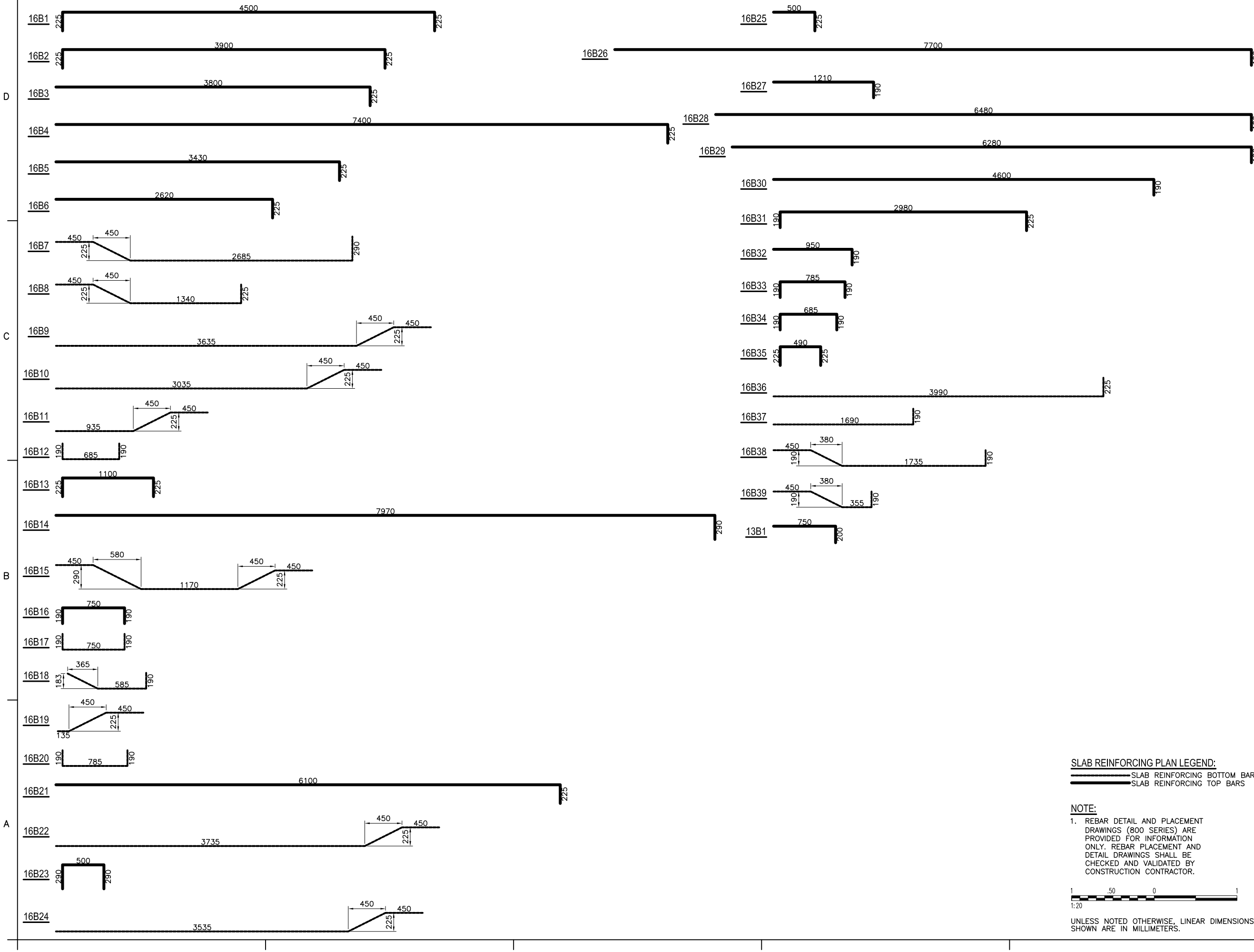

SLAB REINFORCING PLAN LEGEND:

SLAB REINFORCING BOTTOM BARS
SLAB REINFORCING TOP BARS

NOTE:

1. REBAR DETAIL AND PLACEMENT DRAWINGS (800 SERIES) ARE PROVIDED FOR INFORMATION ONLY. REBAR PLACEMENT AND DETAIL DRAWINGS SHALL BE CHECKED AND VALIDATED BY CONSTRUCTION CONTRACTOR.

1 .50 0 1
1:20

UNLESS NOTED OTHERWISE, LINEAR DIMENSIONS SHOWN ARE IN MILLIMETERS.

US ARMY CORPS OF ENGINEERS
AFGHANISTAN ENGINEER DISTRICT

Mark	Description	Date	Appr.	Mark	Description	Date	Appr.

U.S. ARMY ENGINEER DISTRICT, AFGHANISTAN
CORPS OF ENGINEERS
APO AE 96338

Designed by:
Dwn by:
Ckd by:
Reviewed by:
Submitted by:
Date: 5/19/10
Design file no.
Drawing code:
File name: AF1024B-SS815DT
Plot date: 2010/06/06
Plot scale:
Rev: 0

STANDARD DESIGN
VARIOUS PROJECTS
VARIOUS LOCATIONS, AFGHANISTAN

NCO BARRACKS

REBAR REINFORCEMENT DRAWINGS
BAR BEND DETAILS

SHEET REFERENCE NUMBER:
B
S-815

R:\ENGINEERING\26 STANDARD DESIGNS\A-E STANDARD DESIGNS\NCO BARRACKS\AF1024B-SS815DT.DWG

ENGINEERING AND CONSTRUCTION DIVISION
US ARMY ENGINEER DISTRICT, AFGHANISTAN
APO AE, 09356

CONTRACT NO.

GUARD SHACK

AFGHANISTAN

SECTION/DETAIL CROSS REFERENCING CONVENTIONS

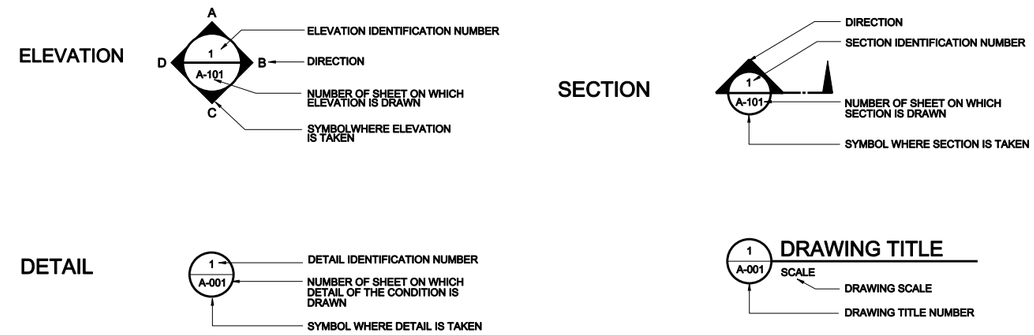

SCHEDULE OF DRAWINGS

SHEET NO	DWG CODE	SHEET REFERENCE NO	DESCRIPTION	REV STATUS
			GENERAL	
		G-001	TITLE SHEET & SCHEDULE OF DRAWINGS	
			STRUCTURAL	
		S-101	STRUCTURAL PLANS, SECTION, AND NOTES	
			ARCHITECTURAL	
		A-101	PLANS, ELEVATIONS, BUILDING SECTION, AND EAVE DETAIL	
		A-601	DOOR & FINISH SCHEDULES AND DETAILS	
			ELECTRICAL	
		E-101	LIGHTING AND POWER PLAN, SCHEDULES, AND DETAILS	

PROJECT COORDINATION

U.S. ARMY ENGINEER DISTRICT, AFGHANISTAN

PROJECT MANAGER — DATE

CHIEF, DESIGN BRANCH — DATE

THIS PROJECT WAS DESIGNED BY AFGHANASTAN ENGINEER DISTRICT OF THE U.S ARMY CORPS OF ENGINEERS. THE INITIALS OR SIGNATURES AND REGISTRATION DESIGNATIONS OF INDIVIDUALS APPEAR ON THESE DOCUMENTS WITHIN THE SCOPE OF THEIR EMPLOYMENT AS REQUIRED BY ER 1110-1-8152.

US ARMY CORPS OF ENGINEERS
AFGHANISTAN ENGINEER DISTRICT

SYMBOL	DESCRIPTION	DATE	APV

DESIGNED BY: AMWD
DWN BY: AED
CKD BY: AED
REVIEWED BY:
SUBMITTED BY:
DATE: 26 MAR 2009
DESIGN FILE NO.
DRAWING CODE:
FILE NAME: G-TS.dgn
PLOT SCALE: AS SHOWN
CONTRACT NO. 300-00-00
REV. ___

U.S. ARMY CORPS OF ENGINEERS
AFGHANISTAN ENGINEER DISTRICT
APO AE 09356

ENGINEERING AND CONSTRUCTION DIVISION

CNPA HEADQUARTERS COMPOUND
KABUL, AFGHANISTAN

GUARD SHACK
TITLE SHEET
SCHEDULE OF DRAWINGS

SHEET REFERENCE NUMBER:
G-001

SHEET 1 OF 5

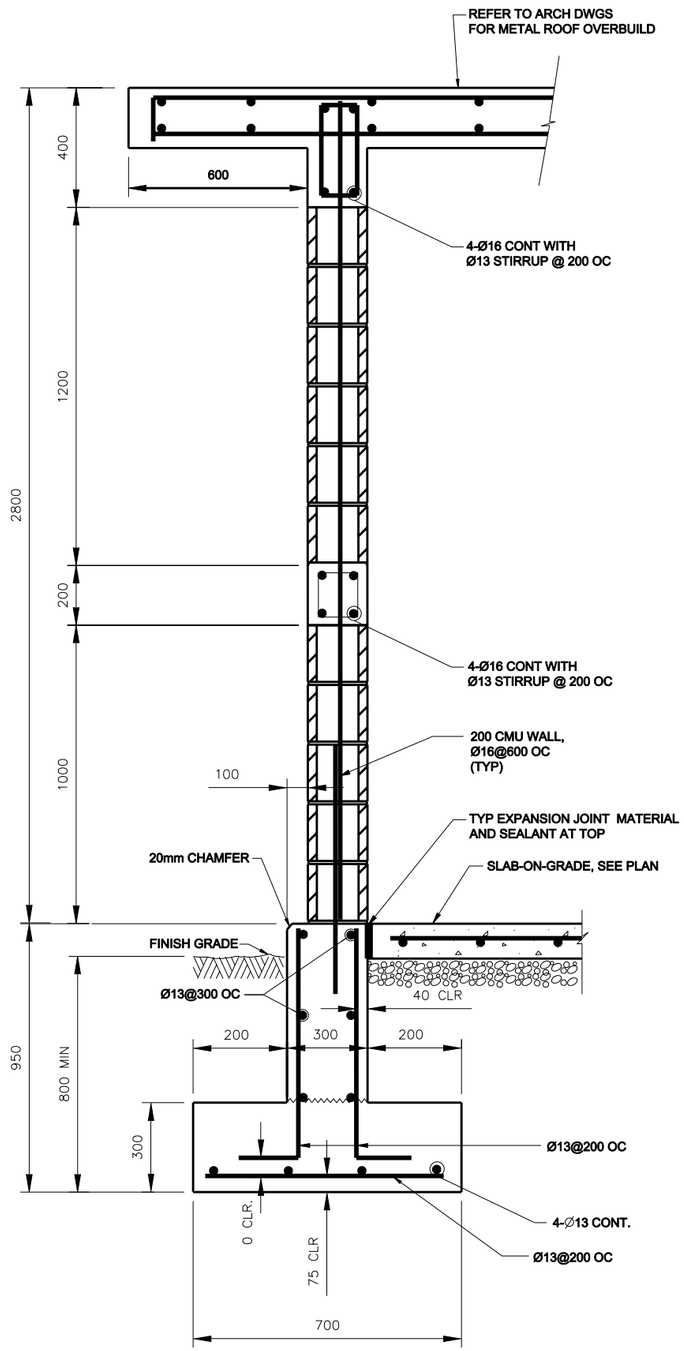

1 / S-101 TYP. EXTERIOR WALL SECTION

SCALE: NOT TO SCALE

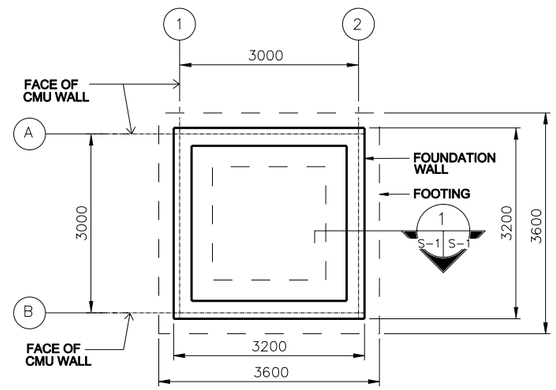

ALL SLABS ON GRADE (TYP):
150 MM THK CONC SLAB ON GRADE WITH Ø13 AT 300 MM ON CENTER TWO WAYS. 100mm THK CAPILLARY WATER BARRIER ON 95% COMPACTED GROUND.

FOUNDATION AND SLAB PLAN

SCALE: 1:50

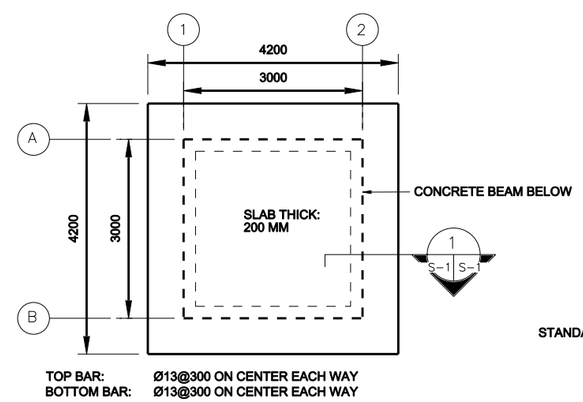

ROOF FRAMING AND SLAB PLAN

SCALE: 1:50

GENERAL NOTES

1. DESIGN LOADS (SERVICE)

LIVE LOADS:

ROOF: 1.0 KPA (20 PSF)
OTHERS: 4.8 KPA (100 PSF)
8.9 KN (2.0 K) CONCENTRATED LOAD

WIND LOADS PER IBC-2003

USING A "3-SECOND" WIND VELOCITY OF 125 KPH
EXPOSURE C AND IMPORTANCE FACTOR I=1.0

EARTHQUAKE LOADS PER IBC-2003:

USING A SEISMICITY: Ss=1.65g AND S_1=0.75g

2. MATERIALS:

CONCRETE: 28 MPa (4 KSI) - CYLINDER STRENGTH AT 28 DAYS

REINFORCING: ASTM A615 GRADE 60 (60 KSI)

CONCRETE MASONRY UNITS:
ASTM C90, TYPE I (NORMAL WEIGHT, MOISTURE CONTROLLED) MORTAR, ASTM C270, TYPE S GROUT, ASTM C 476

3. WORK THESE STRUCTURAL DRAWINGS WITH THE STANDARD-DETAILS DRAWINGS.

4. A RELATIVE (DATUM) FINISH FLOOR ELEVATION EQUAL TO 0.00 M. IS USED AS REFERENCE ELEVATION FOR ALL STRUCTURAL DRAWINGS. COORDINATE WITH SITE SPECIFIC GRADING PLAN TO BE PROVIDED BY CONTRACTOR.

5. FOUNDATIONS ARE DESIGNED USING AN ALLOWABLE BEARING PRESSURE OF 0.75 KG/SQ. CM (1500 PSF), AND BOTTOM OF FOOTINGS ARE PLACED AS SHOWN ON DRAWINGS. GEOTECHNICAL INVESTIGATION SHALL CONFIRM BEARING CAPACITY TO BE NO LESS THAN 0.75 KG/SQ CM. IF GEOTECHNICAL INVESTIGATION SHOWS LESS THAN 0.75 KG/SQ CM THE CONTRACTOR SHALL REDESIGN FOOTINGS BASED ON THE GEOTECHNICAL INVESTIGATION. SEE SPECIFICATION 01015 PARAGRAPH, GEOTECHNICAL, FOUNDATION AND SURVEY.

6. FOR BUILDING NORTH ORIENTATION SEE SHEET C-1.

CRITICAL NOTE

1. ALL CELLS OF CMU WALL SHALL BE FULLY GROUTED AND PROVIDE 16mm RE-BARS AT 600mm ON CENTER.

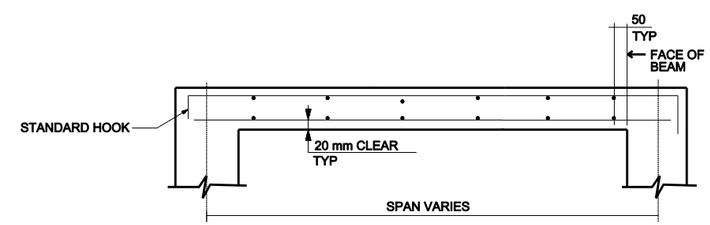

TYPICAL SECTION FOR STRUCTURAL SLABS

SCALE: 1:50

1 0 1 2 3 4
1:50

US ARMY CORPS OF ENGINEERS
AFGHANISTAN
ENGINEER DISTRICT

SYMBOL	DESCRIPTION	DATE	APV

DATE: XX-XX-XX
DESIGN FILE NO.
DRAWING CODE:
FILE NAME:
PLOT SCALE: AS SHOWN
CONTRACT NO. XXX-XX-XX
REV. ___

DESIGNED BY: AED
CKD BY: AED
DWN BY: AED
REVIEWED BY:
SUBMITTED BY:

U.S. ARMY CORPS OF ENGINEERS
AFGHANISTAN ENGINEER DISTRICT
APO AE 09356

ENGINEERING AND CONSTRUCTION DIVISION

CNPA HEADQUARTERS COMPOUND
KABUL, AFGHANISTAN
GUARD SHACK
STRUCTURAL PLANS, SECTION, AND NOTES

SHEET REFERENCE NUMBER:
S-101
SHEET 2 OF 5

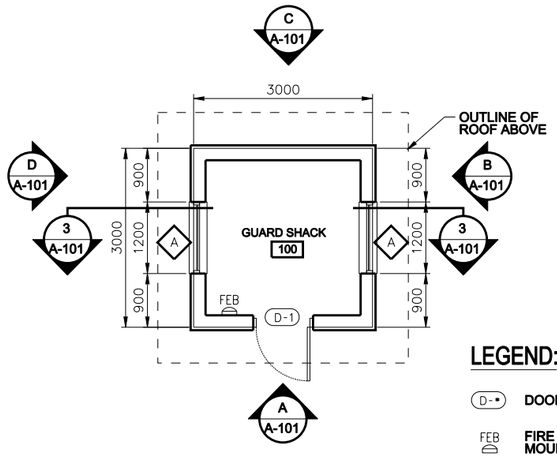

1 FLOOR PLAN
A-101 SCALE: 1:50

LEGEND:

- D-• DOOR TYPE, SEE PLATE A-601
- FEB FIRE EXTINGUISHER AND WALL MOUNTED BRACKET
- A WINDOW TYPE, SEE PLATE A-601

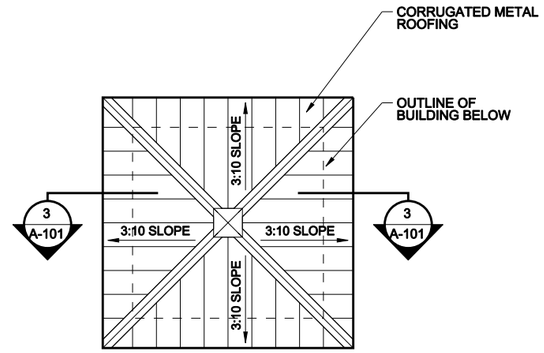

2 ROOF PLAN
A-101 SCALE: 1:50

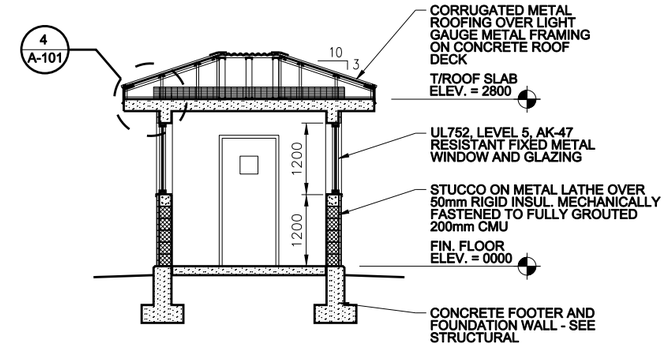

3 BUILDING SECTION
A-101 SCALE: 1:50

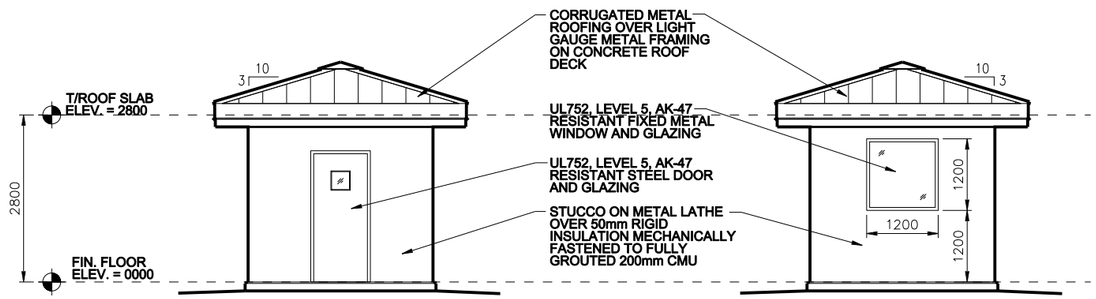

A ELEVATION
A-101 SCALE: 1:50

B ELEVATION
A-101 SCALE: 1:50

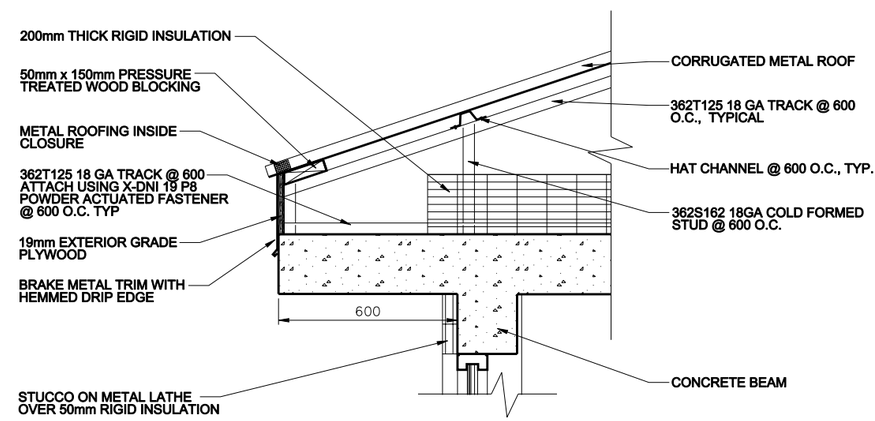

4 EAVE DETAIL
A-101 SCALE = 1:10

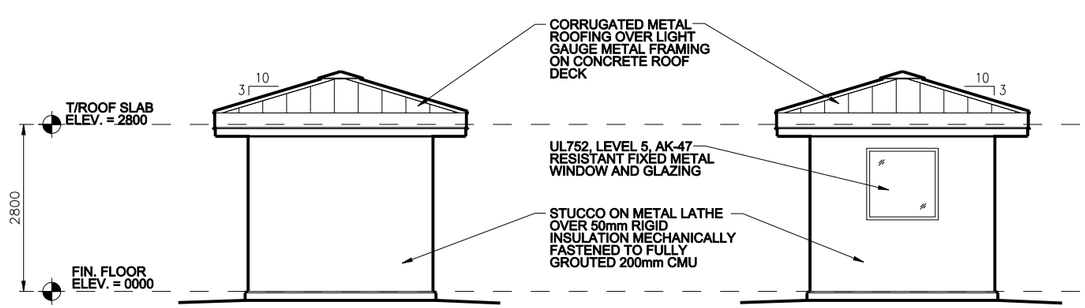

C ELEVATION
A-101 SCALE: 1:50

D ELEVATION
A-101 SCALE: 1:50

GENERAL NOTES:

1. WALL FINISHES SHALL BE AS INDICATED IN FINISH SCHEDULE ON PLATE A-601.
2. SURFACES TO BE PAINTED SHALL BE CLEAN AND FREE OF FOREIGN MATTER BEFORE APPLICATION OF PAINT. CLEANING SHALL BE SCHEDULED SO THAT DUST AND OTHER CONTAMINANTS WILL NOT FALL ON WET, NEWLY PAINTED SURFACES.
3. CONCRETE AND INTERIOR MASONRY SURFACES GROUTED SOLID SHALL BE ALLOWED TO DRY AT LEAST 30 DAYS BEFORE PAINTING.
4. PAINTS CONTAINING LEAD IN EXCESS OF 0.06 PERCENT BY WEIGHT OF THE TOTAL NONVOLATILE CONTENT SHALL NOT BE USED.
5. MERCURIAL FUNGICIDES SHALL NOT BE USED IN OIL-BASE PAINT.
6. REMOVE LOOSE DIRT AND CLEAN SURFACES BEFORE PAINTING. APPLY PAINT TO INTERIOR STRUCTURAL RIGID FRAMINGS AND CEILINGS AND TEST FOR ADHESION. PRIMER COAT FOR MASONRY. INITIAL FIRST COAT WITH AN ACRYLIC LATEX PAINT FOR EXTERIOR SURFACES AND A SECOND COAT WITH A WATER REPELLENT ACRYLIC LATEX PAINT.
7. DIMENSIONS ARE TO EDGE OF MASONRY OPENINGS.

GRAPHIC SCALE

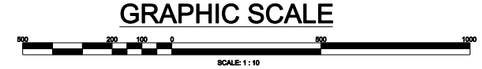

GRAPHIC SCALE

US ARMY CORPS
OF ENGINEERS
AFGHANISTAN
ENGINEER DISTRICT

SYMBOL	DESCRIPTION	DATE	APV

DESIGNED BY: AED
DWN BY: AED
CKD BY: AED
REVIEWED BY:
SUBMITTED BY:
DATE: XX-XX-XX
DESIGN FILE NO.
DRAWING CODE:
REV. ___
FILE NAME:
PLOT SCALE: AS SHOWN
CONTRACT NO. XXX-XX-XXX

U.S. ARMY CORPS OF ENGINEERS
AFGHANISTAN ENGINEER DISTRICT
APO AE 09356

ENGINEERING AND
CONSTRUCTION DIVISION

CNPA HEADQUARTERS COMPOUND
KABUL, AFGHANISTAN

GUARD SHACK
PLANS, ELEVATIONS, BUILDING
SECTION, AND EAVE DETAIL

SHEET
REFERENCE
NUMBER:
A-101

SHEET 3 OF 5

ROOM FINISH SCHEDULE

ROOM NO.	ROOM NAME	FLOOR	BASE	WALLS		CEILING		REMARKS
		FINISH	FINISH	FINISH	COLOR	FINISH	COLOR	
100	GUARD SHACK	SC	-	PP	P1	PP	WHITE	1, 2, 3, 4

DOOR SCHEDULE

TAG	DOOR MAT'L	DOOR TYPE	DOOR WIDTH	DOOR HEIGHT	DOOR THICK	FRAME MAT'L	FRAME TYPE	FIRE LABEL	GLAZING	HRDWRE SET	NOTES
D-1	INSUL. HM	A	900	2150	45	HM	1	-	BULLET RESISTANT	1	1,2,3,4,5,6,7,8

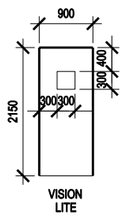

1 DOOR TYPE
A-601 SCALE = 1:50

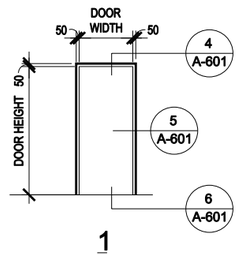

2 FRAME TYPE
A-601 SCALE = 1:50

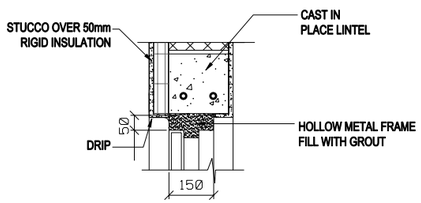

4 EXTERIOR DOOR HEAD
A-601 SCALE = 1:10

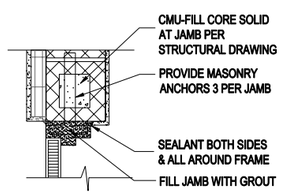

5 EXTERIOR DOOR JAMB
A-601 SCALE = 1:10

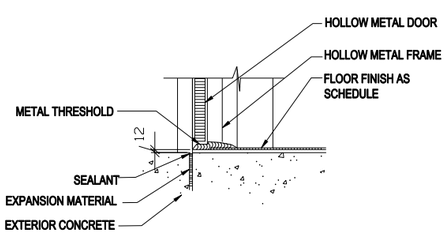

6 EXTERIOR DOOR SILL
A-601 SCALE = 1:10

FINISH SCHEDULE NOTES:

1. FINISH ABBREVIATIONS IN SCHEDULE ARE AS FOLLOWS: SC=SEALED CONCRETE, PP=PAINTED PLASTER.
2. PAINTED PLASTER WALLS AND CEILINGS SHALL HAVE ONE COAT OF PRIMER AND TWO COATS OF SEMI-GLOSS OFF-WHITE PAINT.

DOOR TYPE NOTES:

1. EXTERIOR DOOR, INCLUDING GLAZING, SHALL MEET THE REQUIREMENTS OF UL752, LEVEL 5 RESISTANCE FOR PROTECTION AGAINST AK-47 FIRE.
2. EXTERIOR METAL DOORS AND FRAME COLORS SHALL MATCH ADJACENT WALL COLORS AS SELECTED BY THE CONTRACTING OFFICER.
3. HARDWARE SHALL BE HEAVY DUTY, COMMERCIAL GRADE, STAINLESS STEEL WITH A MATTE FINISH. THERE SHALL BE THREE HINGES AT EACH DOOR, AT LEAST 200/16/5 MM, WITH BALL BEARINGS, SECURED BY THREADED PINS.
4. FRAMES SHALL BE MOUNTED AND ADJUSTED IN ACCORDANCE WITH MANUFACTURER'S INSTRUCTIONS. FRAMES SHALL BE FASTENED WITH MINIMUM OF THREE FASTENING POINTS PER SIDE AT REGULAR INTERVALS.
5. ALL DOOR FRAMES SHALL BE FITTED WITH DOOR SILENCERS.
6. DIMENSIONS SHOWN ON DOOR SCHEDULE ARE BASED UPON MODULAR MASONRY (OR ROUGH OPENING), HEIGHT OF 2200mm FOR STANDARD PERSONNEL DOORS. CONTRACTOR SHALL COORDINATE WITH DOOR SUPPLIER TO ENSURE THAT DIMENSIONS OF DOORS AND FRAMES PROVIDED ARE COMPATIBLE WITH DOOR OPENING DIMENSIONS.
7. ALL DOOR LOCKS SHALL BE MORTISED.
8. LOCK FUNCTION F04 - OFFICE DOOR LOCK - LATCH BOLT OPERATED BY LEVER FROM EITHER SIDE EXCEPT WHEN OUTSIDE LEVER IS MADE INOPERATIVE BY A STOP OR MECHANICAL MEANS OTHER THAN A KEY. WHEN OUTSIDE LEVER IS LOCKED, LATCH BOLT MAY BE RETRACTED BY KEY FROM OUTSIDE OR BY ROTATING INSIDE LEVER.

HARDWARE TYPE:

HW-1
1-1/2 PR HINGES
1 EA LOCKSET F04, OFFICE DOOR LOCK, W/LEVERS, GRADE 1
1 EA THRESHOLD, J32130
1 SET WEATHERSEALS

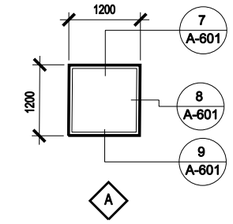

3 WINDOW TYPE
A-601 SCALE = 1:50

WINDOW TYPE NOTE:

1. WINDOW FRAME SHALL BE EXTRUDED ALUMINUM OR STEEL.
2. ALL WINDOWS AND GLAZING SHALL MEET THE REQUIREMENTS OF UL752, LEVEL 5 RESISTANCE FOR PROTECTION AGAINST AK-47 FIRE.

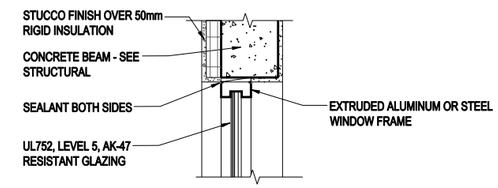

7 WINDOW HEAD
A-601 SCALE = 1:10

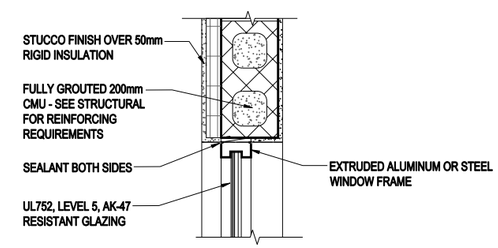

8 WINDOW JAMB
A-601 SCALE = 1:10

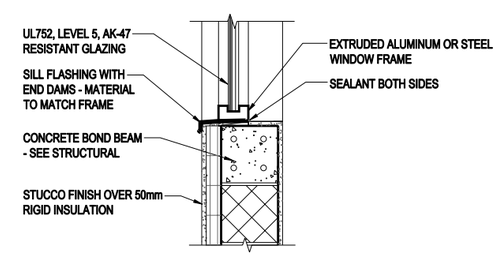

9 WINDOW SILL
A-601 SCALE = 1:10

GRAPHIC SCALES

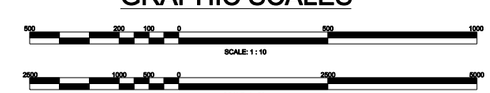

US ARMY CORPS OF ENGINEERS
AFGHANISTAN ENGINEER DISTRICT

SYMBOL	DESCRIPTION	DATE	APP.

DESIGNED BY: AED
DWN BY: AED
CKD BY: AED
REVIEWED BY:
SUBMITTED BY:
DATE: 00-00-00
DESIGN FILE NO.
DRAWING CODE:
FILE NAME:
PLOT SCALE: AS SHOWN
CONTRACT NO. 000-00-00
REV. —

U.S. ARMY CORPS OF ENGINEERS
AFGHANISTAN ENGINEER DISTRICT
APO AE 09356

ENGINEERING AND CONSTRUCTION DIVISION

CNPA HEADQUARTERS COMPOUND
KABUL, AFGHANISTAN
GUARD SHACK
DOOR & FINISH SCHEDULES AND DETAILS

SHEET REFERENCE NUMBER:
A-601
SHEET 4 OF 5

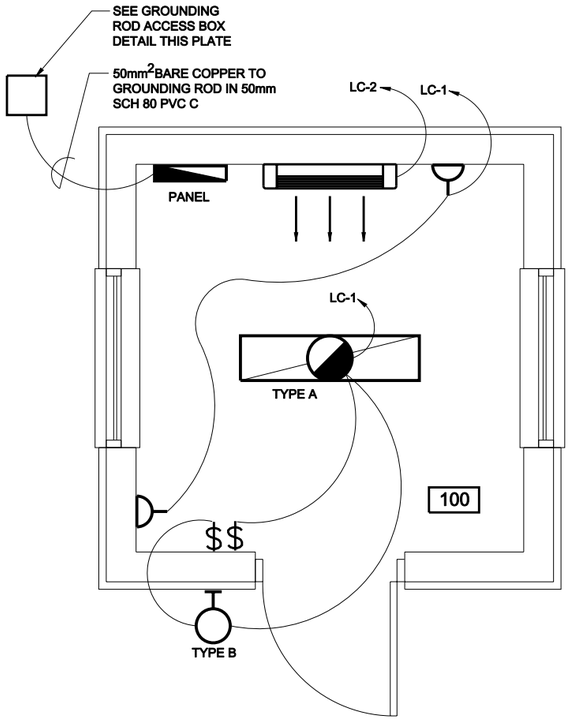

1 E-101 LIGHTING AND POWER PLAN

SCALE: 1:20

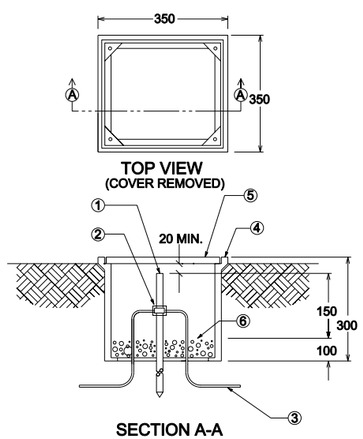

MATERIAL LIST

1. GROUND ROD
2. EXOTHERMIC WELD
3. GROUNDING CONDUCTOR 70mm² COPPER
4. POLYMER CONCRETE FIBERGLASS REINFORCED BOX
5. COVER FOR BOX
6. GRAVEL OR CRUSHED STONE

2 E-101 GROUND ROD ACCESS BOX INSTALLATION DETAIL

NOTES

1. UNLESS OTHERWISE NOTED, PROVIDE ALL EQUIPMENT SHOWN ON THE PLANS. THE ELECTRICAL CONTRACTOR SHALL COORDINATE ALL SYMBOLS SHOWN ON THE PLANS WITH THE SYMBOL LIST. IT SHALL BE THE RESPONSIBILITY OF THE CONTRACTOR TO VERIFY THE INTENT OF ANY SYMBOL THAT IS SHOWN ON THE PLANS AND NOT INDICATED ON THE SYMBOL LIST WITH THE ENGINEER PRIOR TO BID.
2. THE CONTRACTOR SHALL VERIFY THE LOCATION OF ALL UNDERGROUND UTILITIES WITHIN THE CONSTRUCTION AREA THREE (3) WORKING DAYS NOTICE BEFORE DIGGING COMMENCEMENT. NOTIFY THE LOCAL OR STATE AUTHORITY HAVING JURISDICTION AND WAIT THE REQUIRED TIME BEFORE COMMENCING TO DIG.
3. WHERE VOLTAGES AND FREQUENCIES ON THE DRAWINGS AND IN THE SPECIFICATIONS DIFFER FROM THE LOCAL ONES, ALL WORK SHALL BE PERFORMED USING THE LOCAL VOLTAGES AND FREQUENCIES.
4. THE MINIMUM WIRE SIZE ON THE PROJECT SHALL BE 4mm2. THE MINIMUM CONDUIT SIZE SHALL BE 20mm. THE MINIMUM BREAKER SIZE SHALL BE 20 AMPS.
5. THE CONTRACTOR SHALL PUT A MAXIMUM OF 6 DUPLEX SOCKETS ON A 20A SINGLE POLE CIRCUIT.
6. WHERE THE 1010 SCOPE REVIEW, 1015 TECHNICAL REVIEW, DRAWINGS, AND SPECIFICATIONS DIFFER FROM AMERICAN CODES OR STANDARDS THE 1010, 1015, DRAWINGS, AND SPECIFICATIONS SHALL RULE.
7. COORDINATE LOCATION OF ALL ELECTRICAL FIXTURES AND MECHANICAL EQUIPMENT WITH ALL OTHER TRADES.
8. ALL WIRING SHALL BE CONCEALED OR SURFACE MOUNTED IN METAL CONDUIT.
9. PLAN IS TYPICAL FOR GUARD SHACK.
10. SEE DRAWING SITE LAYOUT FOR LOCATION OF GUARD SHACKS.
11. FOR BUILDING NORTH ORIENTATION SEE SITE LAYOUT.

LEGEND

- NEW PANELBOARD - SURFACE
- LIGHTING FIXTURE - SEE FIXTURE SCHEDULE FOR MORE INFORMATION
- WALL MOUNTED LIGHT FIXTURE
- LIGHTING FIXTURE ON NORMAL/EMERGENCY
- $ SINGLE POLE SWITCH - 20A RATED
- DUPLEX 20A BRITISH STANDARD UNSWITCHED SOCKETS
- BRANCH CIRCUIT WIRING CONCEALED ABOVE CEILINGS, SURFACE MOUNTED ON WALLS
- HOME RUN BACK TO PANEL
- NEW SPLIT PACK HVAC SYSTEM

ABBEVIATIONS

AFF	ABOVE FINISHED FLOOR
EC	ELECTRICAL CONTRACTOR
FL	FLUORESCENT
GFI	GROUND FAULT INDICATOR
GC	GENERAL CONTRACTOR
ICD	INCANDESCENT
LV	LOW VOLTAGE
MC	MECHANICAL CONTRACTOR
PLC	PLUMBING CONTRACTOR
T	TELEPHONE
UE	UNDERGROUND ELECTRIC
UT	UNDERGROUND TELEPHONE
W	WALL MOUNTED
WP	WEATHERPROOF
WPG	WEATHERPROOF/GROUND FAULT INTERRUPTER
WT	WATER TIGHT

LIGHTING FIXTURE SCHEDULE

FIXTURE MARK	STYLE NUMBER AND TYPE	NUMBER AND TYPE OF LAMPS	VOLTAGE	MOUNTING	NOTES
A	WRAP AROUND SURFACE MOUNTED FLUORESCENT FIXTURE WITH PRISMATIC ACRYLIC LENS AND ELECTRONIC BALLAST WITH EMERGENCY BALLAST	(2) 32W 3500K	220V - 1Ø 50HZ	SURFACE MOUNTED	FURNISHED WITH ELECTRONIC BALLAST, VIRGIN ACRYLIC WRAP AROUND LENS. EMERGENCY BALLAST WITH SELF TEST SWITCH.
B	INCANDESCENT ONE PIECE W/ APPROVED LENS STABILIZED HIGH IMPACT POLY CARBONATE.	(1) A19 - 100W INCANDESCENT	220V - 1Ø 50HZ	WALL MOUNTED ADJACENT TO EXTERIOR DOORS	

FIXTURE MARK "A"

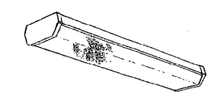

WRAP AROUND SURFACE MOUNTED FLUORESCENT FIXTURE WITH PRISMATIC ACRYLIC LENS AND ELECTRONIC BALLAST WITH EMERGENCY BALLAST

FIXTURE MARK "B"

INCANDESCENT ONE PIECE W/APPROVED LENS STABILIZED HIGH IMPACT POLYCARBONATE.

LOAD CENTER GUARD SHACK

40 AMP MAIN CIRCUIT BREAKER, 220V, 1 PH, 2W, 50 HZ, 100A BUS, 10000 AIC

CKT. NO.	TRIP AMPS	NO. POLES	WIRE MM2	GND. MM2	CONDUIT MM	LOAD SERVED	LOAD-V.A.
1	20	1	4	4	20	LIGHTING & RECEPTACLES	500
2	20	1	4	4	20	SPLIT PACK HVAC UNIT	1000
3	20	1	4	4		SPARE	500
4	20	1	4	4		SPARE	500
5						SPACE	
6						SPACE	
7						SPACE	
8						SPACE	
						TOTAL CONN. LOAD	2500

TOTAL CONN. LOAD 2.5 KVA.

80 %DEMAND = EST. DEMAND LOAD: 2.0 SERVED FROM: _____

GRAPHIC SCALE

1000 400 200 0 1000 2000

SCALE: 1 : 20

US ARMY CORPS OF ENGINEERS AFGHANISTAN ENGINEER DISTRICT

SYMBOL	DESCRIPTION	DATE	APP.

DESIGNED BY: ASD
DWN BY: AED
CKD BY: AED
REVIEWED BY:
SUBMITTED BY:
DATE: XX-XX-XX
DESIGN FILE NO.
DRAWING CODE:
REV. ___
FILE NAME:
PLOT SCALE: AS SHOWN
CONTRACT NO. XXX-XX-XXX

U.S. ARMY CORPS OF ENGINEERS AFGHANISTAN ENGINEER DISTRICT APO AE 09356

ENGINEERING AND CONSTRUCTION DIVISION

CNPA HEADQUARTERS COMPOUND
KABUL, AFGHANISTAN
GUARD SHACK
LIGHTING AND POWER PLAN, SCHEDULES, AND DETAILS

SHEET REFERENCE NUMBER:
E-101
SHEET 5 OF 5

Figure D-1. FCC 17801 RIFLE/MACHINE GUN ZERO RANGE

This range is used to train individual soldiers on the skills necessary to align the sights and practice basic marksmanship techniques against stationary targets. The range is designed for training Shot-Grouping and Zeroing exercises with the M16 and M4 series rifles as well as crew served machine guns.

Primary features include:

- 32 Target frames at 25m
- 16 Target frames at 10m
- 32 Foxholes

This range requires no automation. All targets are fixed at 25 meters from the firing line for M16/M4 and fixed at 10 meters for machine gun.

Associated Range Operations and Control facilities:

Standard Small Arms ROCA Facilities

Requirement Document: FM 3-22.9, FM 23-14, FM 23-65,
Additional Information: None

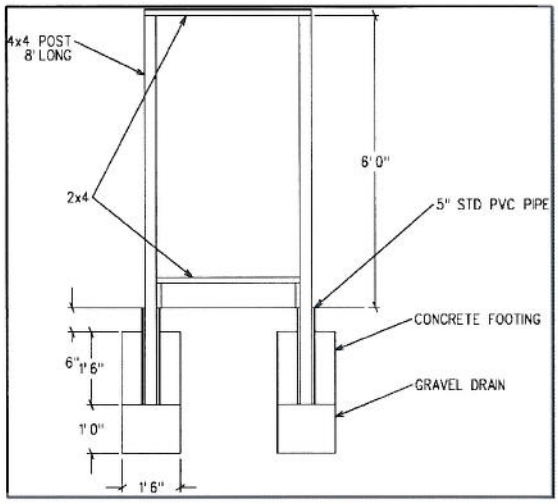

TARGET BOOT DETAIL

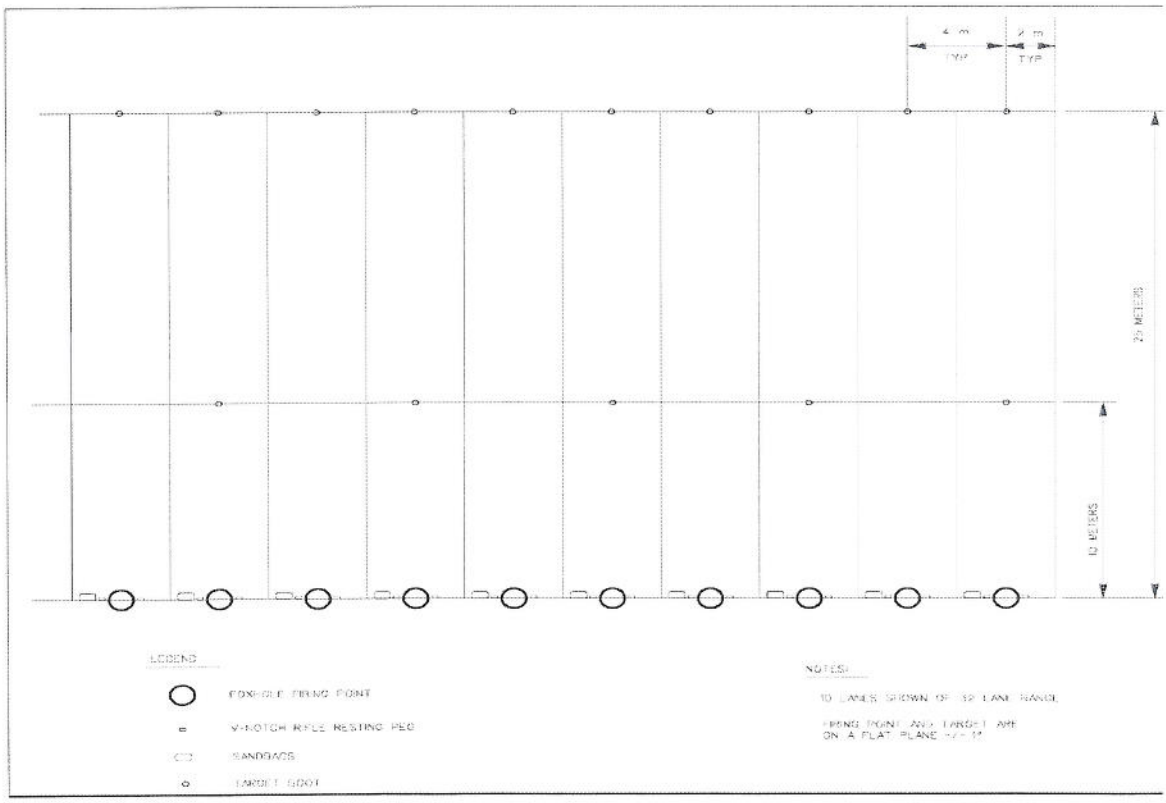

Figure D-3. FCC 17805 AUTOMATED RECORD FIRE (ARF) RANGE

This range is used to train and test individual soldiers on the skills necessary to identify, engage and defeat stationary infantry targets for day/night qualification requirements with the M16 & M4 rifles.

Primary features include:
- 112 Stationary infantry targets
- 16 Foxholes

All targets are fully automated and the event specific target scenario is computer driven and scored from the range operations center. The range operating system is fully capable of providing immediate performance feedback to the using participants.

Associated Range Operations and Control facilities:
- Standard Small Arms ROCA Facilities

Requirement Document: FM 3-22.9
Additional Information: Night firing is accomplished from the night fire line and baseline, firing at the 50m targets. Replace one of the 50m F-type silhouettes with an E-type silhouette. Low light illumination capability is required in both of the 50m target emplacements. Engage the F-type from the 25m night firing line, and the E-type from the baseline.

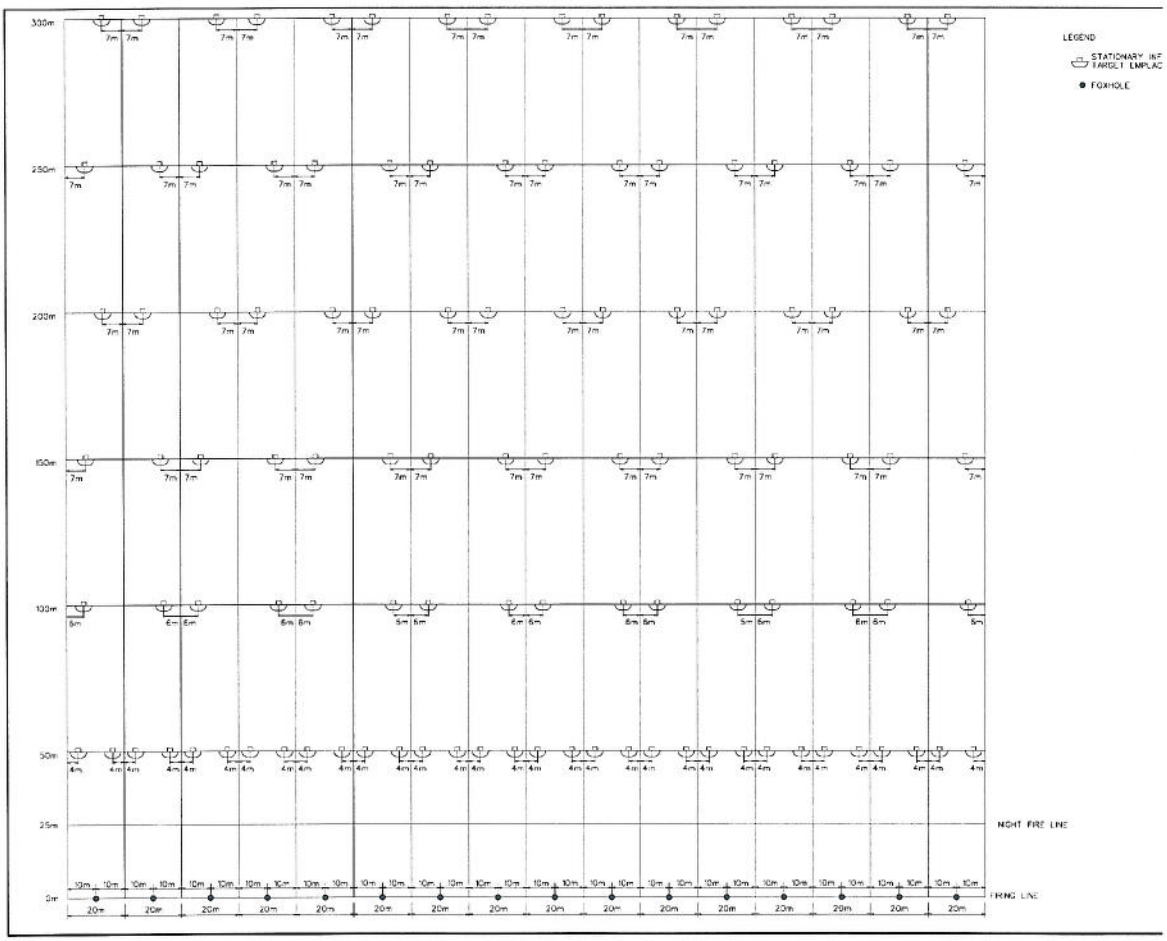

Figure D-12. FCC 17852 MORTAR RANGE

This range is used to train mortar crews on the skills necessary to apply fire mission data, engage, and hit stationary targets in a tactical array.

Primary features include:
- Surveyed firing point(s)
- Dedicated impact area(s) with hard targets

No automation is required for this facility.

Associated Range Operations and Control facilities:
- Ammunition Loading Dock (14970)
- Latrine (73075)

Requirement Document: FM 7-90, FM 23-85, FM 23-90, FM 23-91, FM 23-92
Additional Information: This range may be next to a unit maneuver area. It can then support maneuver training with tactical smoke and illumination. Approximately 10 surveyed firing points are needed on each division post to calibrate aiming circles.

Natural terrain and vegetation should remain undisturbed to the maximum extent possible.

Based on safety, forward observation areas are located in front of firing areas and slightly to the flank of primary mortar to target lanes.

A common impact area is used for all types of mortars. It is at least 2,000 meters wide and 6,000 meters deep. Firing at maximum and minimum range is obtained by using different firing points.

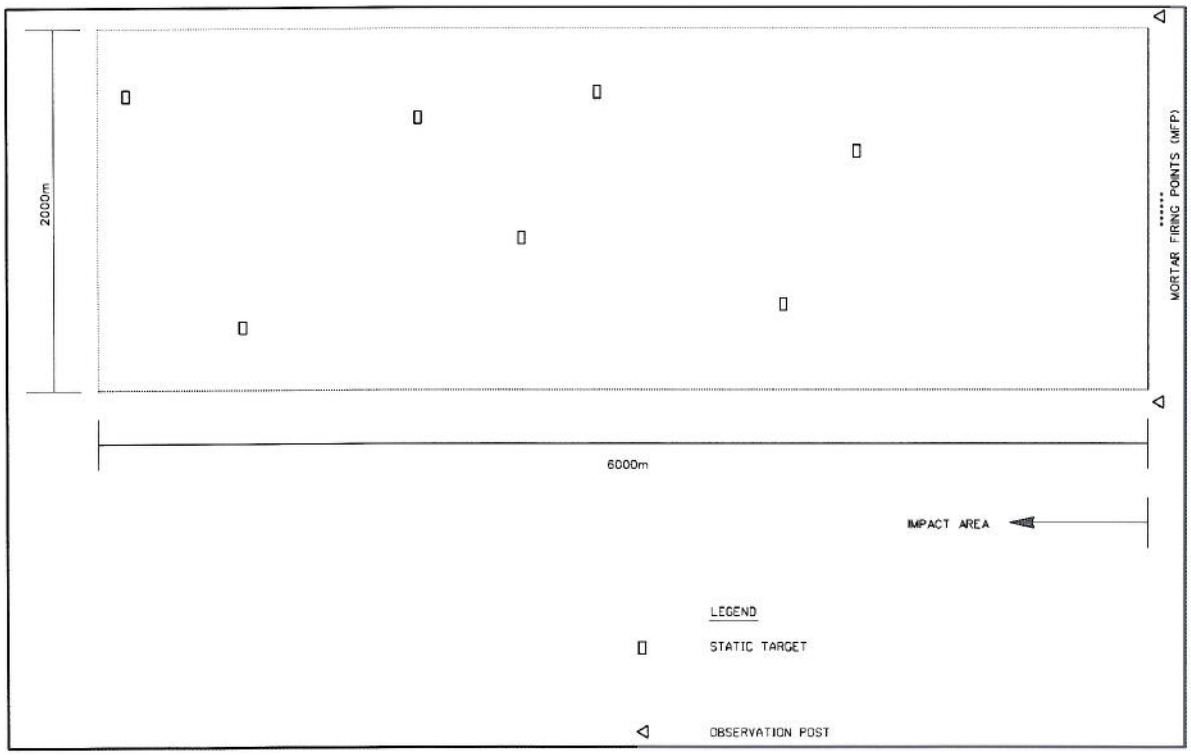

Figure D-21. FCC 17878 URBAN ASSAULT COURSE

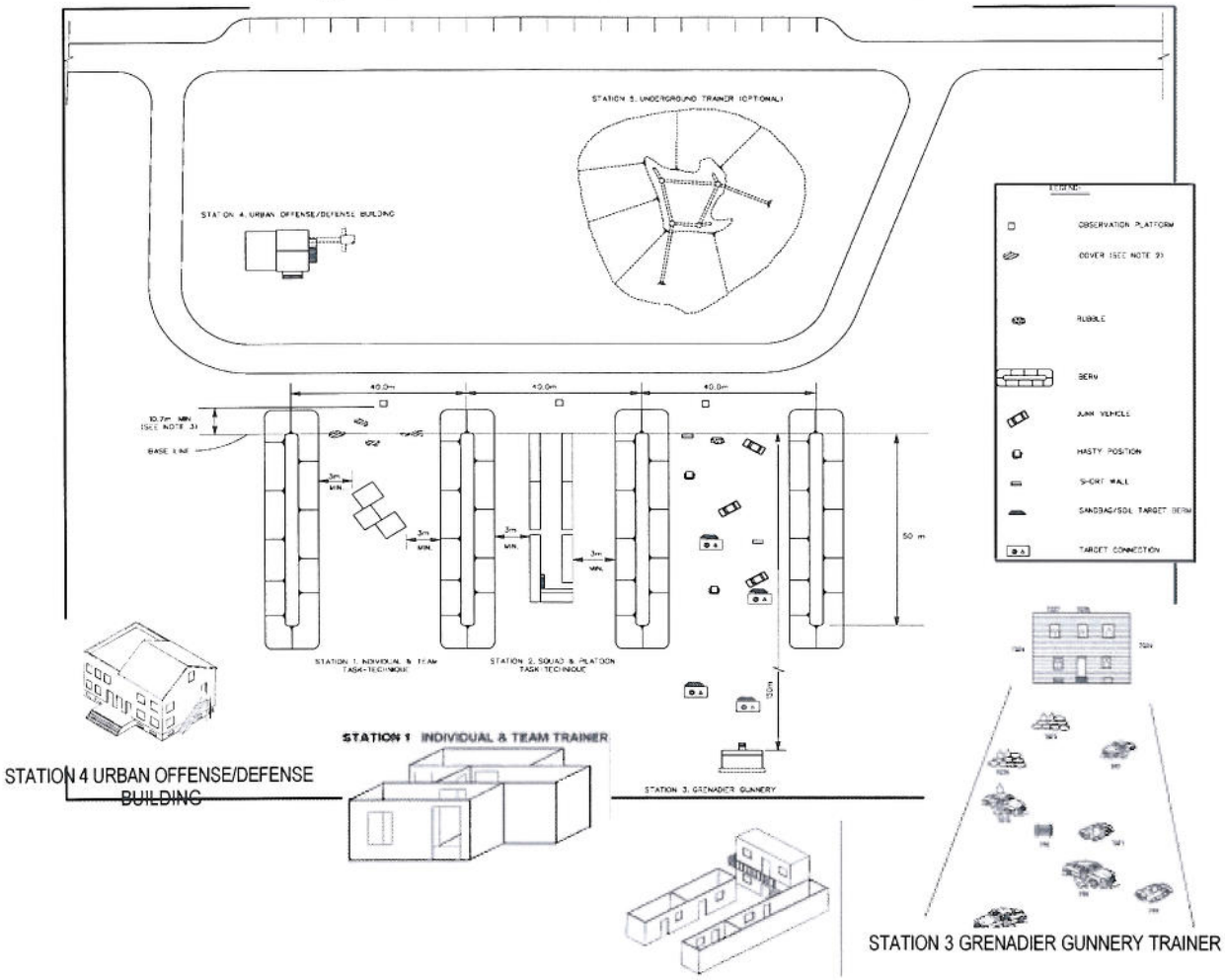

This facility is used to train individual soldiers, squads, and platoons on tasks necessary to operate within a built-up/urban area. The facility contains 5 stations:

Station 1 - Indvidual & Team Trainer
Station 2 - Squad & Platoon Trainer
Station 3 - Grenadier Gunnery Trainer
Station 4 - Urban Offense/Defense Trainer
Station 5 - Underground Trainer

Targetry Requirements:

Station 1 - 6 interior precision human urban targets (HUT)
Station 2 - 10 interior precision HUT
Station 3 –13 total targets: 6 non-precision exterior targets (SITs) and 7 non-precision fascade targets
Station 4 - 10 interior precision targets
Station 5 - no instrumentation required

All targets are fully automated and the event specific target scenario is computer driven and scored from the range operations center. Targetry in Stations 1, 2 and 4 areprecision human urban targets that have reconfigurable plug and play capability.

Associated Range Operations and Control facilities: Operations/Storage Building (17122) Latrine (73075)

Requirement Document: FM 3-0, FM 3-06, FM 3-06.11, ARTEP 7-8-MTP,7-3/4-1110, TC 90-1
Additional Information: Station 3 - 40mm HE grenades will not be used.
Station 4 - No live fire training.
Station 5 - Smoke will not be employed inside the underground trainer. Also, pyrotechnics are not authorized for station 5.

Figure D-25. FCC 17883 HAND GRENADE FAMILIARIZATION RANGE

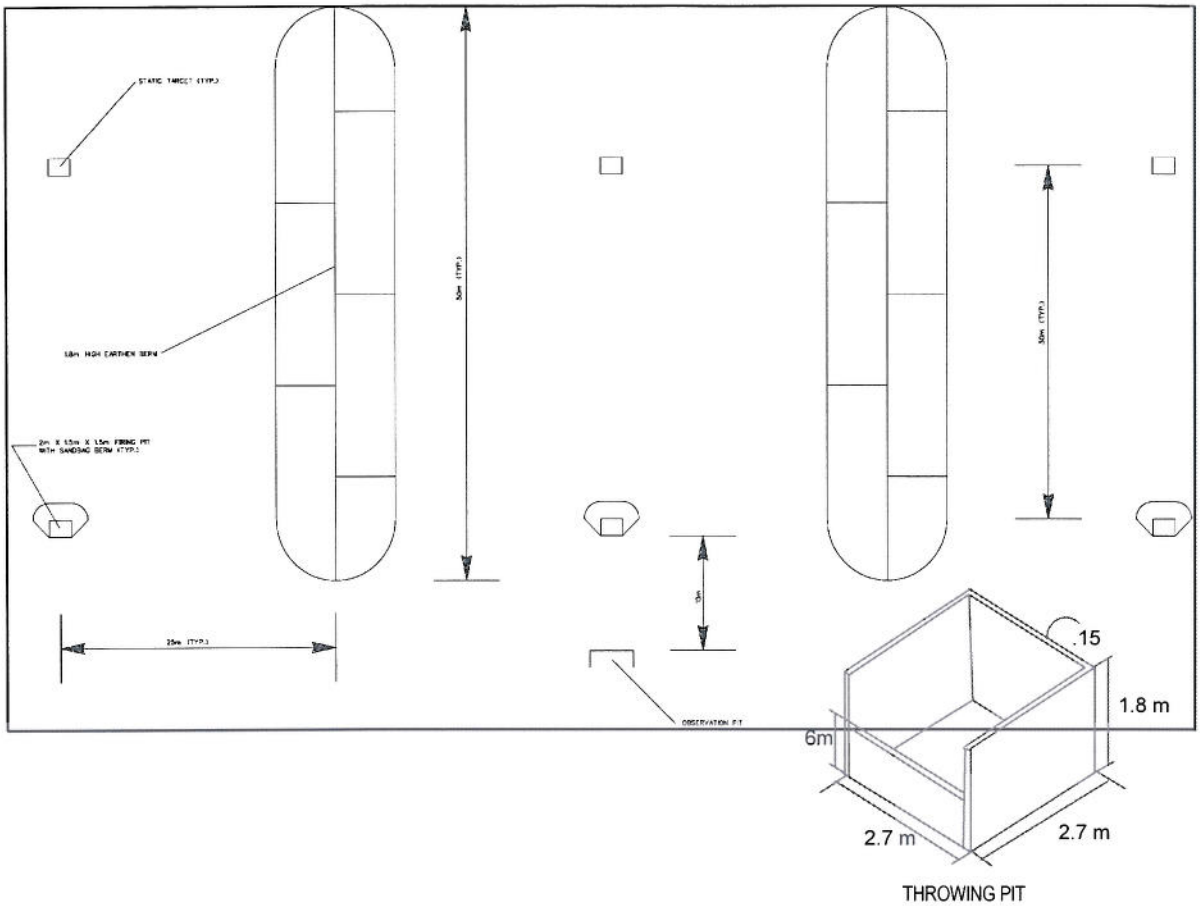

This range is used to train and test individual soldiers in the employment of live fragmentation hand grenades.

Primary features include:
4 Throwing bays

No automation is required for this facility. All targets are fixed at required distances

Associated Range Operations and Control facilities:
Standard Small Arms ROCA Facilities
Except No Range Operations Center, Small (17123)

Requirement Document: FM 3-23.30
Additional Information: Steel, concrete or wooden revetments or earthen berms 1.8m high should separate at least two of the bays from the other tow and extend out 50m. This permits practice to continue on half the range if a dud occurs. Ideally, dividers separate all of the bays.

Sand-filled drums provide an aiming point for the soldier as he throws the grenade.

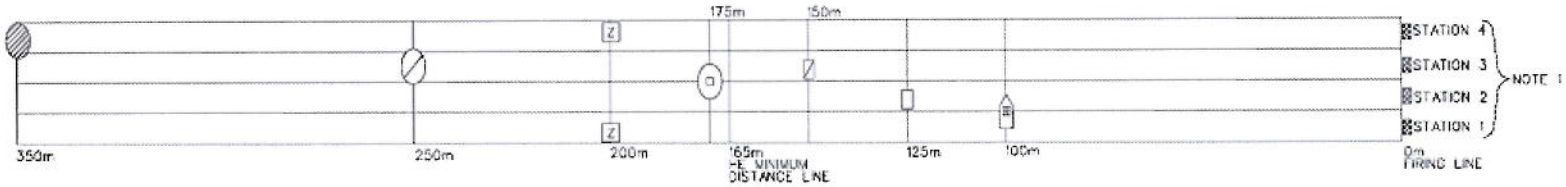

This facility is used to train and test individual solders on the skills necessary to engage and defeat stationary target emplacements with the 40mm Grenade Launcher.

Primary features include:
4 Individual Firing Stations

No automation is required for this facility. All targets/facades are fixed at required distances.

Associated Range Operations and Control facilities:
Standard Small Arms ROCA Facilities

Requirement Document: FM 3-23.31, STP 21-1 SMCT
Additional Information: Zero targets are at least 2 meters high and 2 meters wide. Zero target is clearly marked with a large contrasting "Z".
Targets are made of long-lasting, durable material that can withstand constant use with little maintenance. Salvaged oil drums filled with sand make excellent semi-permanent target material for this range.

LEGEND:

- WINDOW FACADE
- SMALL BUNKER
- TROOPS STANDING
- TROOPS IN OPEN EMPLACEMENT
- AUTOMATIC WEAPON POSITION
- TWO MAN BUNKER
- ZERO TARGETS

NOTES:

1. STATION 1-(ZERO) SANDBAG PRONE FIGHTING POSITION.
   STATION 2-(CLOSE RANGE-KNEELING) LOGWALL 4' HIGH.
   STATION 3-(MID RANGE-STANDING) STANDARD FOXHOLE.
   STATION 4-(LONG RANGE-PRONE) SANDBAG PRONE FIGHTING POSITION.

Figure D-26. FCC 17884 GRENADE LAUNCHER RANGE

Figure D-29. FCC 17892 FIRE AND MOVEMENT RANGE

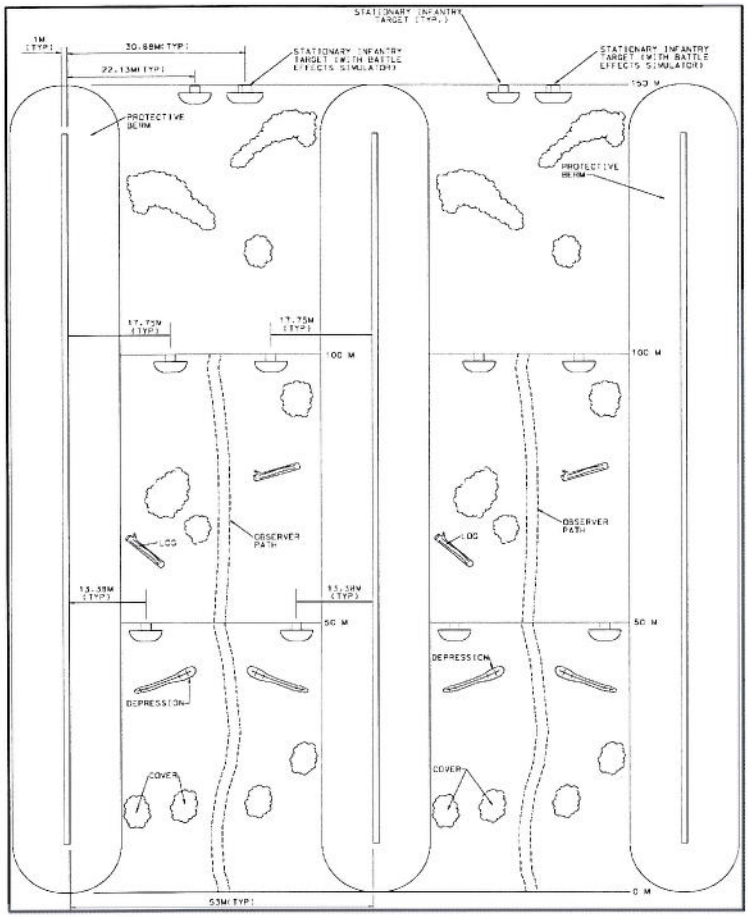

This range is used to train individual soldiers and buddy/teams on basic fire and movement techniques against stationary infantry targets. Soldiers show their ability to select covered and concealed positions, move while under fire, apply principles of teamwork, and use suppressive fire on enemy soldier targets.

Primary features include:

- 4 Lanes
- 6 Stationary infantry targets per lane
- 3 meter high berms along each side of lanes

Targets are not fully automated and/or the scenarios are not computer driven or scored.

Associated Range Operations and Control facilities:

- Range Operations Center, Small (17123)
- Operations/Storage Building (17122)
- Bleacher Enclosure (75061)
- Ammo Breakdown Building (17129)
- Latrine (73075)

Requirement Document: FM 7-8, TC 7-9
Additional Information: All lanes should have natural features that offer cover and concealment.

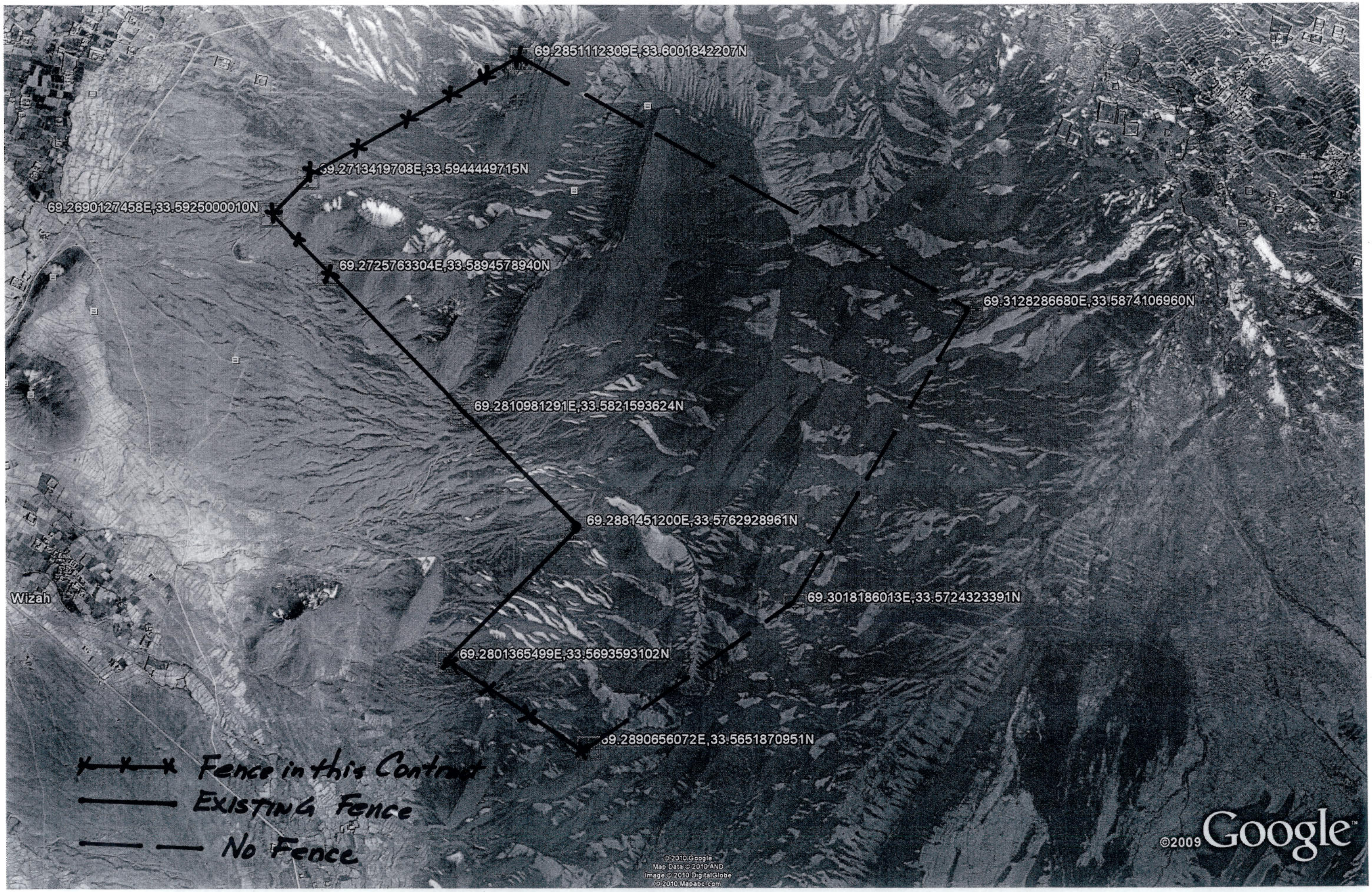
69.2851112309E,33.6001842207N
69.2713419708E,33.5944449715N
69.2690127458E,33.5925000010N
69.2725763304E,33.5894578940N
69.3128286680E,33.5874106960N
69.2810981291E,33.5821593624N
69.2881451200E,33.5762928961N
Wizah
69.3018186013E,33.5724323391N
69.2801365499E,33.5693593102N
69.2890656072E,33.5651870951N
Fence in this Contract
EXISTING Fence
No Fence
©2009 Google
© 2010 Google
Map Data © 2010 AND
Image © 2010 DigitalGlobe
© 2010 Mapabc.com

APPENDIX B-2

DRAWINGS

INDEX

A2.–.COVERED.MESS.DRAWING

A.4.–.COVERED.MESS.DETAILS

ADMIN TRAINING COMPANY

CLASSROOM OFFICE FACILITY

COVERED MESS

FENCING

GARDEZ RANGES

GUARD SHACK

NCO BARRACKS

OBSERVATION Tower

RANGE CONTROL & SECURITY OFFICE BUILDING

ROAD CROSS SECTION DRAWING

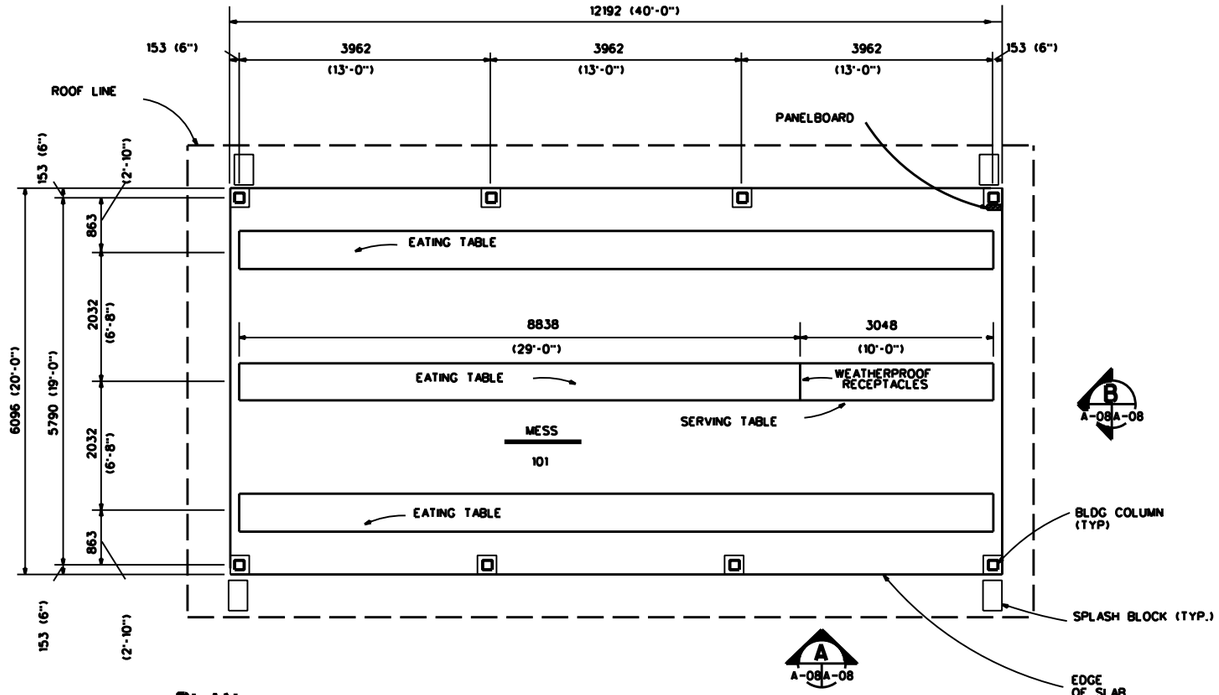

PLAN

SCALE : 1:100

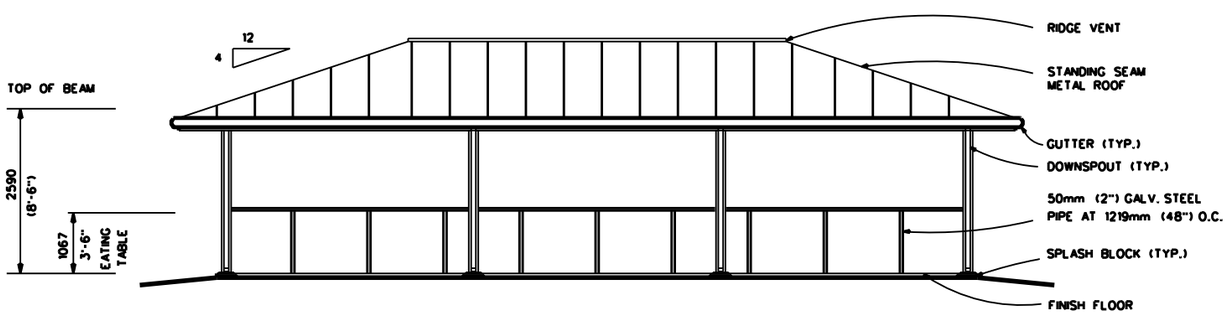

ELEVATION A

SCALE : 1:100 A-08A-08

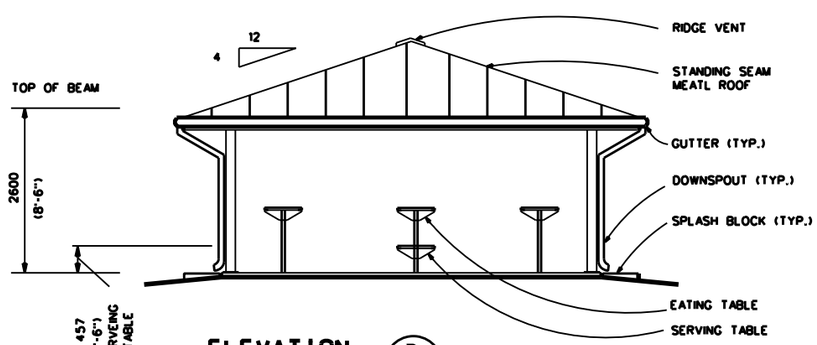

ELEVATION B

SCALE : 1:100 A-08A-08

GENERAL

The Covered Mess provides an area for troop messing during training. The facility is also used as an area for weapon cleaning. The covered facility has a concrete floor and has a standing seam metal roof supported on columns and a wood framing system. The sides are left open. Stand-up eating tables and serving tables are provided. The Coverd area is 74.3 square meters (800 square feet). But, for 1391 purposes the facility is 37.2 square meeters (400 square feet) because the facility is calculated as half square footage.

For service schools that require increased capacity, the length is increased by 3.962 meters (13 feet) and the width is increased by 2.032 meters (6'-8") to accommodate an additional table. The covered area becomes 131.3 square meters (8.128 meters X 16.154 meters), (1413 square feet (26'-8" X 53')). But, for 1391 purposes the facility is 65.7 square meeters (707 square feet) because the facility is calculated as half square footage.

SITE ADAPTATION

This standard definitive design should be adapted to local conditions such as climate, topography, seismic zone, available construction materials and techniques and the existing character of surrounding buildings. These factors may affect plans and elevations. The building foundation must be designed based on the results of a geotechnical investigation.

REFERENCE CRITERIA

The design and construction must comply with applicable codes and standards including: technical instruction TI 800-01, "Design Criteria": Department of the Army regulations, technical manuals, handbooks, standards, and specifications.

FUNCTIONAL REQUIREMENTS

All dimensions not labeled are in millimeters. Gutters, downspouts and splash blocks should be provided where required by climatic conditions. Ice guards may be necessary in northern climates. The serving and eating tables should be constructed with galvanized or stainless steel shelves as required by the installation. The shelves are supported with galvanized steel pipes and galvanized structural shapes. The floor of the mess is sloped from the center to the perimeter to provide drainage.
The Covered Mess is accessed only by able-bodied personnel and does not require ADA compliance unless dictated by local criteria.

MECHANICAL

No mechanical systems are required for the Covered Mess.

ELECTRICAL

The Covered Mess shall be served by 120/240V, 1 phase, 3-wire secondary power. Rigid steel conduit shall extend a minimum of 1524mm (5') outside the building for power circuits entering and leaving the building. Voltage drop shall comply with NEC standards and Army technical manuals. Grounding will be installed in accordance with NFPA 70, the NEC, and other applicable standards.
The panel board shall be 120/240V single phase, mounted inside the building. Receptacles shall be general purpose, GFCI weatherproof, 120V, 20A duplex mounted a minimum of 450mm (24") above the finished floor.
Illumination levels will be designed in accordance with IES. Lighting shall consist of white lamps providing a level of 15 foot-candles and red lamps for lower level night light. Separate switching shall be provided for white lamps and red lamps.
The emergency electrical system shall comply with NFPA 70 and NFPA 101.
Provide a mast style lightning protection system for safe cover of personnel.

FIRE PROTECTION

Fire protection is not required per fire codes for this building. Consult local Fire Marshall for compliance with local laws.

GRAPHIC SCALES

1:100 1000 500 0 1000 2000

US Army Corps of Engineers

Rev.	Description	Date	Approved
-			

Designed by: Date: Rev.
Dwn by: Ckd by: Design file no.
Reviewed by: Drawing code: STD 171-90-01
Submitted by: File name: STDA17.DGN
Plot scale:
Plot date:

U. S. ARMY ENGINEERING AND SUPPORT CENTER, HUNTSVILLE
HUNTSVILLE, ALABAMA

1 JUL 2008

RANGE AND TRAINING LAND PROGRAM
STANDARD DESIGN MANUAL

COVERED MESS

Sheet reference number:
A -08

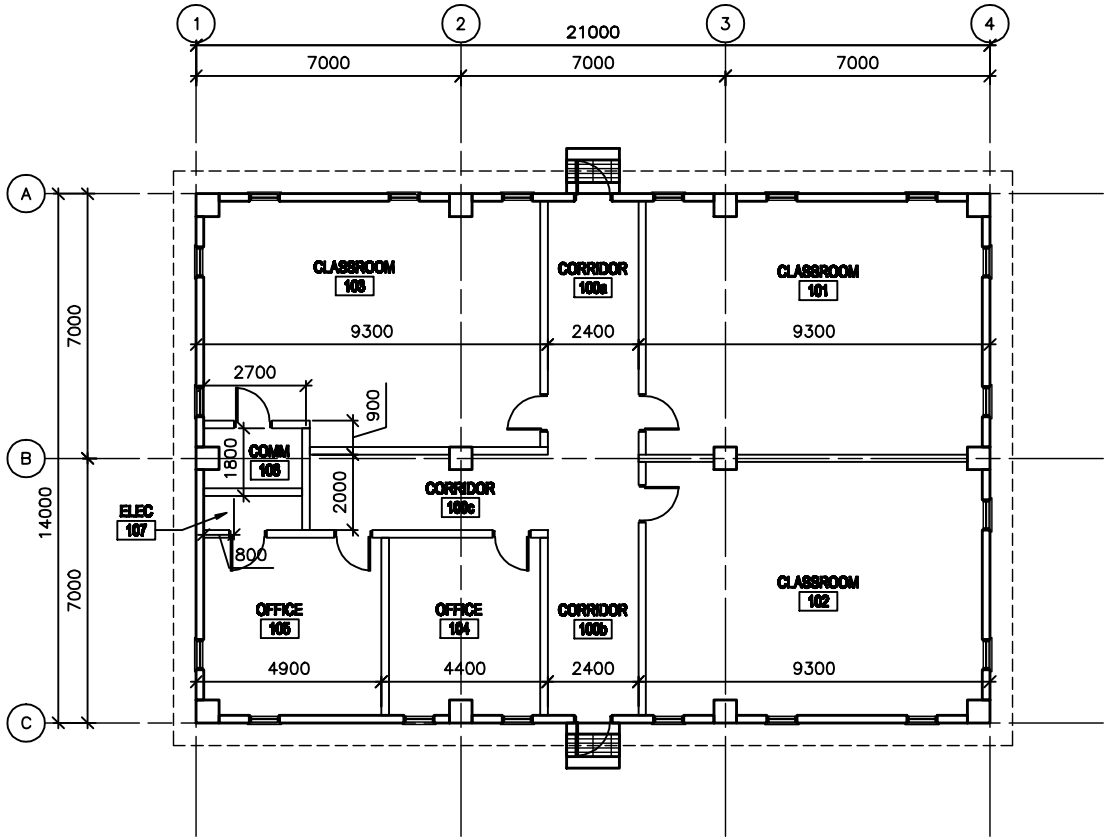

CLASSROOM / OFFICE FACILITY PROPOSED FLOOR PLAN

SCALE: 1:200 **(23 AUGUST 2010)**

NOTE:

THE ONLY CHANGE BETWEEN THIS DRAWING AND THE ENCLOSED SITE–ADAPT STANDARD DESIGN DRAWINGS ARE THE REMOVAL AND/OR RE–ALIGNMENT OF SOME PARTITIONS, DOORS AND WINDOWS. ALL OTHER DESIGN REQUIREMENTS AND SPECIFICATIONS REMAIN INTACT. THE CONTRACTOR SHALL SUBMIT FOR GOVERNMENT APPROVAL ALL ELECTRICAL, MECHANICAL, LIFE SAFETY AND COMMUNICATION DRAWINGS NECESSARY TO SHOW COORDINATION OF THESE DESIGNS PER THIS REVISED PLAN.

AFGHAN NATIONAL ARMY

STANDARD BUILDING DESIGN

ADMIN TRAINING COMPANY

100% FINAL DESIGN SUBMITTAL

SHEET INDEX

G–001 COVER SHEET

STRUCTURAL

S–001 GENERAL NOTES & DESIGN CRITERIA
S–101 FOUNDATION/SLAB & ROOF FRAMING PLANS
S–401 BUILDING SECTIONS
S–501 FOUNDATION SECTIONS
S–502 FRAMING SECTIONS
S–503 BEAM & COLUMN DETAILS
S–504 BEAM & COLUMN DETAILS
S–601 SCHEDULES
S–701 TYPICAL DETAILS
S–702 TYPICAL DETAILS

ARCHITECTURAL

A–001 LIFE SAFETY PLAN
A–101 FLOOR PLAN
A–102 ROOF PLAN
A–201 ELEVATIONS
A–301 BUILDING SECTIONS
A–401 WALL SECTIONS
A–501 EXTERIOR DETAILS
A–502 HEAD, JAMB, & SILL DETAILS
A–503 STOOP DETAILS
A–601 WINDOW & DOOR SCHEDULES

MECHANICAL

M–101 HVAC FLOOR PLAN, SCHEDULES, & DETAILS

ELECTRICAL

E–001 ELECTRICAL SYMBOLS & ABBREVIATIONS
E–101 ELECTRICAL LIGHTING PLAN
E–102 ELECTRICAL POWER & SYSTEMS PLAN
E–501 ELECTRICAL DETAILS
E–502 ELECTRICAL DETAILS
E–601 ELECTRICAL LIGHT FIXTURE AND PANEL SCHEDULES

US ARMY CORPS OF ENGINEERS
AFGHANISTAN ENGINEER DISTRICT

Mark	Description	Date	Appr.	Mark	Description	Date	Appr.

Designed by: KMP/MMY
Dwn by: RCG
Ckd by: CWW
Reviewed by: LHM
Submitted by: BAKER
Date: 2/23/10
Rev: 0
Design file no.
Drawing code:
File name: AANATCOS-001
Plot date: 6/4/2010
Plot scale: 8X

U.S. ARMY CORPS OF ENGINEERS
AFGHANISTAN ENGINEER DISTRICT
APO AE 96338

Michael Baker Jr., Inc.
A unit of Michael Baker Corporation
Airside Business Park
100 Airside Drive
Moon Township, PA 15108
www.mbakercorp.com

STANDARD DESIGN
VARIOUS PROJECTS
VARIOUS LOCATIONS, AFGHANISTAN

ADMIN TRAINING COMPANY

COVER SHEET

Sheet reference number:
G–001

1 2 3 4 5

STRUCTURAL ABBREVIATIONS:

ACI	AMERICAN CONCRETE INSTITUTE
ADD'L	ADDITIONAL
AISC	AMERICAN INSTITUTE OF STEEL CONSTRUCTION
AISI	AMERICAN IRON AND STEEL INSTITUTE
ASTM	AMERICAN SOCIETY FOR TESTING AND MATERIALS
ARCH	ARCHITECTURAL
B	BOTTOM
BLDG	BUILDING
BOTT	BOTTOM
℄	CENTER LINE
CFMRF	COLD FORM METAL ROOF FRAME
CFMF	COLD FORM METAL FRAME
CFS	COLD FORMED STEEL
CIP	CAST-IN-PLACE
CIPL	CAST-IN-PLACE LINTEL
CJ	CONTROL JOINT
CLR	CLEAR
CMU	CONCRETE MASONRY UNIT
COEFF	COEFFICIENT
COL	COLUMN
CONC	CONCRETE
CONT	CONTINUOUS
COORD	COORDINATE
CRSI	CONCRETE REINFORCING STEEL INSTITUTE
CSJ	CONSTRUCTION JOINT
DIA	DIAMETER
DIAG	DIAGONAL
DIM	DIMENSION
DWG	DRAWING
DWL	DOWEL
EA	EACH
EF	EACH FACE
ELEC	ELECTRICAL
ELEV	ELEVATION
EMBED	EMBEDMENT
EQUIV	EQUIVALENT
ETC	ET CETERA
EW	EACH WAY
EXP	EXPANSION
EXT	EXTERIOR
FTG	FOOTING
GA	GAUGE
GB	GRADE BEAM
HORIZ	HORIZONTAL
h	HOUR
HRS	HOURS
IBC	INTERNATIONAL BUILDING CODE
INFO	INFORMATION
INT	INTERIOR
kg	KILOGRAM
km	KILOMETER
kN	KILONEWTON
kPa	KILOPASCAL
L#	ANGLE (# INDICATES SIZE)
LONG	LONGITUDINAL
LLV	LONG LEG VERTICAL
m	METER
MAX	MAXIMUM
MECH	MECHANICAL
MFG	MANUFACTURER
MID	MIDDLE
MIN	MINIMUM
MISC	MISCELLANEOUS
mm	MILLIMETER
MPa	MEGAPASCAL
MTL	METAL
MWFRS	MAIN WIND FORCE RESISTING SYSTEM
N	NEWTON
N	NORTH
N/A	NOT APPLICABLE
#	NUMBER SYMBOL FOR REBAR SIZE
NTS	NOT TO SCALE
OC	ON CENTER
OPNG	OPENING
ℙ or PL	PLATE
PRE-ENG	PRE-ENGINEERED
REINF	REINFORCED
REQ'D	REQUIRED
RB	ROOF BEAM
SIM	SIMILAR
SPECS	SPECIFICATIONS
STD	STANDARD
STRUCT	STRUCTURAL
SW	SHEAR WALL
T	TOP
T/	TOP OF
T/ELEV	TOP ELEVATION
T/SLAB	TOP OF SLAB
T&B	TOP AND BOTTOM
THK	THICK
TYP	TYPICAL
UFC	UNIFIED FACILITIES CRITERIA
UON	UNLESS OTHERWISE NOTED
VERT	VERTICAL
W	WIDTH
W/	WITH

1.0 GENERAL NOTES:

1.1 THIS PROJECT HAS BEEN DESIGNED FOR THE WEIGHTS AND MATERIALS INDICATED ON THE SHEETS AND FOR THE LIVE LOADS INDICATED IN THE DESIGN DATA. IT IS THE CONTRACTOR'S RESPONSIBILITY TO DETERMINE ALLOWABLE CONSTRUCTION LOADS AND TO PROVIDE PROPER DESIGN AND CONSTRUCTION OF FALSEWORK, FORMWORK, STAGING, BRACING, SHEETING AND SHORING, ETC.

1.1 COORDINATE THESE SHEETS WITH THE ARCHITECTURAL, MECHANICAL, ELECTRICAL, PLUMBING, AND CIVIL SHEETS. ALL DIMENSIONS SHOWN ON THE SHEETS ARE MILLIMETERS UNLESS NOTED OTHERWISE.

1.2 THE CONTRACTOR SHALL VERIFY AND COORDINATE ALL FLOOR AND ROOF OPENING SIZES AND LOCATIONS, EQUIPMENT PAD SIZES AND LOCATIONS, ANCHOR BOLT LAYOUTS, ETC WITH EQUIPMENT SELECTED. THE CONTRACTOR SHALL MAKE ANY REQUIRED MODIFICATIONS AT NO ADDITIONAL COST.

1.3 THE CONTRACTOR SHALL REFER TO THE ARCHITECTURAL, MECHANICAL, ELECTRICAL AND PLUMBING SHEETS FOR SLEEVES, CURBS, INSERTS OR OPENINGS, ETC. NOT HEREIN INDICATED.

1.4 WORK NOT INCLUDED ON THE SHEETS BUT IMPLIED TO BE SIMILAR TO THAT SHOWN AT CORRESPONDING PLACES ELSEWHERE ON THE SHEETS SHALL BE REPEATED.

1.5 IN CASE OF CONFLICT BETWEEN THE NOTES, DETAILS AND SPECIFICATIONS THE MOST RIGID REQUIREMENTS SHALL GOVERN.

1.6 SEE ARCHITECTURAL SHEETS FOR LOCATIONS OF MASONRY AND NON-LOAD BEARING PARTITIONS. PROVIDE COMPRESSIBLE FIRESAFING AT TOP OF WALL AS REQUIRED BY ARCHITECTURAL SHEETS.

1.7 COORDINATE FINISHED FLOOR DATUM ELEVATION 0.0m WITH THE CIVIL SHEETS.

2.0 FOUNDATION NOTES

2.1 THE GEOTECHNICAL ANALYSIS FOR THIS PROJECT IS THE RESPONSIBILITY OF THE CONTRACTOR AWARDED THE WORK. AN ASSUMED ALLOWABLE SOIL BEARING VALUE OF 72 kPa HAS BEEN USED IN THE STRUCTURAL ANALYSIS OF THE BUILDING HEREIN AND SHALL BE CONFIRMED AND VERIFIED AS PART OF THE GEOTECHNICAL INVESTIGATION. VALUES WHICH DO NOT MEET THE REQUIREMENTS INDICATED ON THE BASIS OF DESIGN SHEET SHALL BE IMMEDIATELY BROUGHT TO THE ATTENTION OF THE CONTRACTING OFFICER FOR CONSIDERATION AND DETERMINATION ON THE NEXT APPROPRIATE COURSE OF ACTION.

2.2 SEE THE SPECIFICATION FOR ADDITIONAL REQUIREMENTS TO THOSE OUTLINED IN THE GEOTECHNICAL INVESTIGATION FOR EXCAVATION AND PREPARATION OF THE FOUNDATION AND THE SLAB ON GRADE SUBGRADE INCLUDING COMPACTION PROCEDURES.

2.3 EXCAVATIONS FOR FOOTINGS SHALL HAVE THE SIDES AND BOTTOMS TEMPORARILY LINED WITH 0.25mm POLYETHYLENE IF PLACEMENT OF CONCRETE DOES NOT OCCUR WITHIN 24 HRS OF THE EXCAVATION OF THE FOOTING.

2.4 FOUNDATION CONDITIONS NOTED DURING CONSTRUCTION WHICH DIFFER FROM THOSE DESCRIBED IN THE GEOTECHNICAL REPORT SHALL BE REPORTED TO THE GENERAL CONTRACTOR BEFORE FURTHER CONSTRUCTION IS ATTEMPTED. SEE PROJECT SPECIFICATIONS.

2.5 NO FOOTINGS OR SLABS SHALL BE POURED INTO OR AGAINST SUBGRADE CONTAINING FREE WATER, FROST, ICE OR LOOSE MATERIAL. FROST DEPTH ASSUMED TO BE 800mm.

2.6 ALL SLAB-ON-GRADE, TRENCH BOTTOMS AND OTHER ON-GRADE INTERIOR HORIZONTAL SURFACES SHALL BE PLACED OVER A 0.25mm POLYETHYLENE VAPOR RETARDER OVER A 100mm #57 STONE WATER CAPILLARY BARRIER PLACED ON SUBGRADE PROPERLY PREPARED IN ACCORDANCE WITH THE CONTRACT SPECIFICATIONS. (UON)

2.7 PRIOR TO START OF FOUNDATION OR SLAB-ON-GRADE CONSTRUCTION, EXISTING SUBGRADES SHALL BE COMPACTED TO MINIMUM OF 95% MAXIMUM DRY DENSITY OBTAINED THRU ASTM D 1557 MODIFIED PROCTOR TESTING.

2.8 SEE PLUMBING, ELECTRICAL & CIVIL SHEETS FOR REQUIRED UNDERSLAB UTILITIES.

2.9 SEE ARCHITECTURAL SHEETS FOR ALL WATERPROOFING DETAILS AND MATERIALS.

2.10 IF UNDERMINING OF FOOTINGS OCCURS, FILL VOIDS WITH 18 MPa CONCRETE. DO NOT ATTEMPT TO REPLACE AND RE-COMPACT SOIL.

3.0 CONCRETE

3.1 CONCRETE SHALL HAVE THE UNIT WEIGHT OF 2400 kg/m^3 AND A MINIMUM COMPRESSIVE STRENGTH (f'c) OF 28 MPa AT 28 DAYS. ALL CONCRETE SHALL HAVE A WATER-CEMENT RATIO OF 0.45. SEE SPECIFICATIONS FOR ADDITIONAL INFORMATION. ENTRAIN AIR TO PRODUCE TOTAL AIR CONTENT ACCORDING TO THE SPECIFICATIONS FOR CONCRETE EXPOSED TO FREEZING TEMPERATURES (EXTERIOR FOOTINGS, SLAB TURNDOWNS, EXTERIOR SLABS AND SLABS-ON-GRADE, EXTERIOR RETAINING WALLS, AND EXTERIOR GRADE BEAMS.)

3.2 NO CALCIUM CHLORIDE SHALL BE USED IN ANY CONCRETE.

3.3 MIXING, TRANSPORTING AND PLACING OF CONCRETE SHALL CONFORM TO ACI 301M-05.

3.4 ALL CONCRETE WORK SHALL CONFORM TO THE REQUIREMENTS OF THE AMERICAN CONCRETE INSTITUTE (ACI) 318M MANUAL (metric), "BUILDING CODE REQUIREMENTS FOR REINFORCED CONCRETE", AND REQUIREMENTS OUTLINED IN THE CONTRACT SPECIFICATIONS. WHEN THERE IS A CONFLICT BETWEEN ACI AND THE SPECIFICATIONS, THE MORE STRINGENT SHALL GOVERN.

3.5 CHAMFER ALL EXPOSED EXTERNAL CORNERS OF CONCRETE WITH 20mm x45 DEGREE CHAMFER UON.

3.6 CONCRETE REINFORCEMENT BARS SHALL CONFORM TO ASTM A615M-96a, GRADE 420 MPa, REINFORCING BARS SHALL NOT BE TACK WELDED, WELDED, HEATED OR CUT, UNLESS INDICATED ON THE CONTRACT DOCUMENTS. ALL LAP SPLICES SHALL BE CLASS "B" UON.

3.7 HORIZONTAL FOOTING AND HORIZONTAL WALL REINFORCEMENT SHALL BE CONTINUOUS AND SHALL HAVE 90 DEGREE BENDS AND EXTENSIONS, OR CORNER BARS OF EQUIVALENT SIZE LAPPED WITH A CLASS B TENSION SPLICE AT CORNERS AND INTERSECTIONS. TOP BAR CRITERIA SHALL APPLY IF 300mm OR MORE OF FRESH CONCRETE IS PLACED BELOW BAR.

3.8 SLABS-ON-GRADE SHALL HAVE CONSTRUCTION JOINTS OR CRACK CONTROL JOINTS AS SHOWN ON THE DRAWINGS. CONSTRUCTION JOINTS CAN BE USED AT CONTROL JOINT LOCATIONS AT CONTRACTORS OPTION. SEE SLAB PLANS & JOINT DETAILS FOR ADDITIONAL INFORMATION. FOR AREAS NOT SHOWN ON DWGS, THE MAXIMUM SPACING OF CONSTRUCTION/ CRACK CONTROL JOINTS SHALL BE 4800mm

3.9 ALL CONCRETE REINFORCEMENT SHALL BE DETAILED, FABRICATED, LABELED, SUPPORTED, AND SPACED IN FORMS AND SECURED IN PLACE IN ACCORDANCE WITH THE PROCEDURES AND REQUIREMENTS OUTLINED IN THE LATEST EDITION OF THE "BUILDING CODE REQUIREMENTS FOR REINFORCED CONCRETE", ACI 318M, AND THE "MANUAL OF STANDARD PRACTICE FOR DETAILING REINFORCED CONCRETE STRUCTURES", ACI 315M, LATEST EDITION. BASED ON IN COUNTRY REINFORCEMENT AVAILABILITY, IT IS THE CONTRACTOR'S OPTION TO ROUND DESIGNATED ODD NUMBERED REINFORCEMENT SIZES UP (1) ONE BAR SIZE.

3.10 ALL DOWELS SHALL MATCH SIZE AND NUMBER OF MAIN REINFORCING, UNLESS NOTED OTHERWISE ON THE SHEETS.

3.11 ADDITIONAL BARS SHALL BE PROVIDED AROUND ALL FLOOR AND WALL OPENINGS AS SHOWN ON THE SHEETS.

3.12 SEE ARCHITECTURAL SHEETS FOR TYPE AND LOCATION OF ALL FLOOR FINISHES.

3.13 THE CONTRACTOR SHALL COORDINATE ADDITIONAL WALL/SLAB OPENINGS NOT SHOWN ON STRUCTURAL SHEETS. SEE MECHANICAL, ELECTRICAL, PLUMBING AND CIVIL SHEETS.

3.14 UNLESS NOTED OTHERWISE, ALL CURBS SHALL BE REINFORCED WITH AT LEAST (1)-#13 CONTINUOUS AND #13 AT 300mm O.C. DOWELS TO STRUCTURE BELOW.

3.15 THE CONTRACTOR SHALL VERIFY ALL OPENINGS, PAD SIZES, AND ANCHOR BOLTS WITH EQUIPMENT SELECTED.

3.16 FOR ALL WALLS & PIERS, PROVIDE DOWELS INTO FOOTING AT EACH VERT REINF BAR, UON DOWEL SIZE SHALL BE SAME AS VERT REINF.

3.17 PROVIDE CONCRETE POUR STOPS OR FORMED AS REQUIRED FOR INSTALLATION OF ALL CONCRETE WORK.

3.18 PROVIDE ADDITIONAL (2)-#13 x 600mm REINFORCING BARS IN SLAB-ON GRADE AT ALL RE-ENTRANT CORNERS. PLACE BARS AT MID-DEPTH OF SLAB WITH A CLEARANCE OF 50mm FROM CORNER UON.

3.19 COLD-WEATHER PLACEMENT: COMPLY WITH ACI 306.1 AND AS FOLLOWS. PROTECT CONCRETE WORK FROM PHYSICAL DAMAGE OR REDUCED STRENGTH THAT COULD BE CAUSED BY FROST, FREEZING ACTIONS, OR LOW TEMPERATURES. SUBMIT A COLD WEATHER CONCRETING PLAN FOR APPROVAL.

3.20 PROVIDE BONDING COMPOUND PER ASTM C 1059-99: SPECIFICATION FOR LATEX AGENTS FOR BONDING FRESH CONCRETE (GROUT) TO HARDENED CONCRETE.

3.21 THE FORMED SURFACES FOR REINFORCED CONCRETE SHALL ACHIEVE A "CLASS A" FINISH WHEN RECEIVING PAINT OR A "CLASS B" FINISH WHEN RECEIVING PLASTER OR TILE AS PER SPECIFICATION SECTION 03 31 00 CAST-IN-PLACE STRUCTURAL CONCRETE.

3.22 AT INTERSECTING GRADE BEAMS AND SHEAR WALLS, PROVIDE CORNER BARS AT INTERSECTIONS WITH SAME QUANTITY, SIZE AND SPACING AS HORIZONTAL BARS WITH LEG LENGTH = 50db.

3.23 REFER TO S-800 SERIES REINFORCING BAR PLACEMENT DRAWINGS DEFINING LENGTHS, BENDS, AND SPACINGS FOR ALL STRUCTURAL CONCRETE. THE S-800 SERIES DRAWING ARE BASED ON THE S-400, S-500, S-600, AND S-700 SERIES DRAWING SCHEDULES, DETAILS, AND DIAGRAMS.

4.0 CONCRETE MASONRY

4.1 MASONRY CONSTRUCTION SHALL CONFORM TO SPECIFICATION FOR MASONRY STRUCTURES (ACI 530.1) UON.

4.2 STRENGTH OF MASONRY MATERIALS SHALL BE AS FOLLOWS:

a. CONCRETE MASONRY UNITS SHALL BE NORMAL WEIGHT, GRADE N, TYPE 1, CONFORMING TO ASTM C-90 AND HAVE A MINIMUM COMPRESSIVE STRENGTH OF 10.4 MPa ON THE NET AREA.

b. MORTAR SHALL CONFORM TO ASTM C-270 TYPE S.

c. GROUT FOR MASONRY SHALL BE NORMAL WEIGHT AND HAVE A MINIMUM COMPRESSIVE STRENGTH OF 14 MPa AT 28 DAYS. GROUT SHALL CONFORM TO ASTM C476M. GROUT LIFTS SHALL NOT EXCEED 1,400mm.

d. REINFORCED MASONRY SHALL HAVE A STRENGTH F'm = 10 MPa. (F'm IS THE COMPRESSIVE STRENGTH OF THE MASONRY AT 28 DAYS AS DETERMINED BY PRISM TESTS).

4.3 ALL VERTICAL REINFORCEMENT FOR CONCRETE MASONRY SHALL BE ASTM A615M-96a, GRADE 420 MPa. ALL SPLICES SHALL BE LAPPED 48 BAR DIAMETERS MINIMUM.

4.4 BOND BEAMS SHALL BE SPACED AT 1200mm OC VERTICALLY. BOND BEAM REINFORCING SHALL BE CONTINUOUS AND PROVIDED AT WALL INTERSECTIONS AND WALL CORNERS (REFERENCE CONCRETE MASONRY NOTE 4.11). ALL BOND BEAM REINFORCING SHALL BE CONTINUOUS AND HAVE STANDARD ACI HOOKS AT EACH END. PROVIDE STANDARD BAR SPLICES AS SPECIFIED. AS AN ALTERNATE TO CMU BOND BEAMS, IT IS THE CONTRACTOR'S OPTION TO PROVIDE 200mm x 200mm CONTINUOUS CAST-IN-PLACE CONCRETE BOND BEAMS WITH (2)-#16 IN LIEU OF CMU BOND BEAMS INDICATED ON THE DRAWINGS.

4.5 SEE TYPICAL DETAILS FOR MINIMUM REINFORCEMENT REQUIREMENTS FOR CMU WALLS. PROVIDE STANDARD BAR SPLICES AS SPECIFIED. ALL VERTICAL REINFORCEMENT EXTENDS FULL HEIGHT OF WALL.

4.6 CMU CELLS THAT REQUIRE VERTICAL REINFORCING BARS AS INDICATED ON THE CONTRACT DRAWINGS AND/OR SPECS SHALL HAVE REINF BARS PLACED IN CENTERS OF CMU CELLS AND CONTINUOUSLY GROUTED UON.

4.7 ALL CMU CELLS, OPEN CAVITIES, AND AIR SPACES OF ALL EXTERIOR WALLS SHALL BE GROUTED TO STOP FRAGMENTS FROM MORTAR BLAST.

4.8 CONTRACTOR SHALL COORDINATE LOCATION OF ALL OPENINGS SEE ARCH, MECH, ELEC, AND PLUMBING SHEETS FOR SIZE AND LOCATION OF OPENINGS.

4.9 MASONRY WALLS SHALL NOT BE BACK FILLED PRIOR TO THE MORTAR AND GROUT ATTAINING THEIR RESPECTIVE MAXIMUM DESIGN STRENGTHS PER SPECIFICATIONS.

4.10 PROVIDE GALVANIZED MORTAR/GROUT SCREEN W/ 3mm MESH WHERE CELLS BELOW ARE NOT GROUTED.

4.11 AT INTERSECTING BOND BEAMS, PROVIDE CORNER BAR FOR EACH HORIZONTAL BAR IN BOND BEAMS AT INTERSECTING WALLS. USE SAME SIZE AND SPACING AS HORIZONTAL BARS WITH LEG LENGTH = 50db.

4.12 THE ALTERNATE TOP OF CMU WALL BRACING DETAIL(S) SHOWN ON S-701 CAN BE UTILIZED AT THE CONTRACTOR'S OPTION IN PLACE OF THE "SLEEVED DOWEL" WALL CONNECTIONS DEPICTED ON S-400 AND S-500 SERIES DRAWINGS. IN ADDITION, ALTERNATE DETAIL(S) SHOW CAST-IN-PLACE WALL BOND BEAMS THAT CAN BE UTILIZED AT THE CONTRACTOR'S OPTION IN PLACE OF THE STANDARD CMU BOND BEAMS CONSTRUCTED OF CMU BLOCKS.

5.0 COLD-FORMED METAL FRAMING

5.1 ALL COLD-FORMED METAL FRAMING MEMBERS SHALL CONFORM TO ASTM A1003M, STRUCTURAL GRADE ST340 (MPa), WITH A GALVANIZED COATING OF Z275 OR BETTER IN ACCORDANCE WITH ASTM A653M.

5.2 ALL COLD-FORMED METAL FRAMING MEMBERS SHALL HAVE THE FOLLOWING MINIMUM PROPERTIES:

a. MINIMUM METAL THICKNESS:
TRACK = 1.37mm;
STUD/OTHER = 1.09mm

b. MINIMUM FLANGE WIDTH:
TRACK = 38mm;
STUD/OTHER = 35mm

c. MINIMUM MEMBER DEPTH:
ALL SECTIONS = 152.2mm

d. PURLIN (HAT CHANNEL)
DEPTHxWIDTH(FLAT TOP)xTHICK = 25mmx42mmx1.59mm

5.3 ALL CONNECTIONS SHALL BE MADE WITH CORROSION RESISTANT (ASTM A153M), SELF-DRILLING, SELF-TAPPING STEEL DRILL SCREWS IN ACCORDANCE WITH ASTM C1513. SCREWS SHALL HAVE A LOW PROFILE HEAD BENEATH ROOF DECK, AND STANDARD HEAD ALL OTHER LOCATIONS.

5.4 FABRICATE COLD FORMED METAL FRAMING AND ACCESSORIES PLUMB, SQUARE AND TRUE TO LINE, WITH CONNECTIONS SECURELY FASTENED ACCORDING TO AISI STANDARD FOR COLD FORMED STEEL FRAMING.

5.5 CUT FRAMING MEMBERS BY SAWING OR SHEATHING, DO NOT TORCH CUT.

5.6 INSTALL FRAMING MEMBERS IN ONE-PIECE LENGTHS UNLESS SPLICE CONNECTIONS ARE INDICATED FOR TRACK OR TENSION MEMBERS

5.7 INSTALL TEMPORARY BRACING AND SUPPORTS TO SECURE FRAMING DURING CONSTRUCTION. MAINTAIN BRACING AND SUPPORTS IN PLACE UNTIL THE STRUCTURE HAS BEEN COMPLETED WITH ALL CONNECTIONS AND PERMANENT BRACING SECURED.

6.0 STRUCTURAL DESIGN CRITERIA

6.1 ALL DESIGNS SHALL CONFORM TO THE PROVISIONS OF THE IBC 2006 AND UFC AS APPLICABLE.

6.2 DESIGN LOADS

6.2.1 DEAD LOADS (PER IBC 2006 & UFC 3-310-01)

MECH/ELEC/PLUMBING	0.20 kPa
MISCELLANEOUS	0.15 kPa
COLD-FORMED FRAMING	0.20 kPa
INSULATION	0.10 kPa
METAL ROOF PANEL	0.14 kPa
	0.79 kPa
FLOOR PARTITION ALLOWANCE	0.96 kPa

6.2.2 LIVE LOADS (PER IBC 2006 & UFC 3-310-01)

ROOF	1.00 kPa
CORRIDOR (2-STORY BLDG ONLY)	4.80 kPa
ALL OTHERS (2-STORY BLDG ONLY)	2.40 kPa
SLAB ON GRADE	4.80 kPa

6.2.3 SNOW LOADS (PER IBC 2006 & UFC 3-310-01)

GROUND SNOW LOAD (Pg)	1.2 kPa
SNOW IMPORTANCE FACTOR (I)	1.0
SNOW EXPOSURE FACTOR (Ce)	1.0
THERMAL FACTOR (Ct)	1.0

6.2.4 WIND LOADS (PER IBC 2006)

BASIC WIND SPEED	137 km/h
WIND IMPORTANCE FACTOR	1.0
WIND EXPOSURE CATEGORY	D
DIRECTIONALITY COEFFICIENT (Kd)	0.85
TOPOGRAPHIC FACTOR (Kzt)	1.0

6.2.5 SEISMIC LOADS (PER IBC 2006 & UFC 3-310-04)

OCCUPANCY USE CATEGORY II
SEISMIC IMPORTANCE FACTOR (Ie) 1.0
SEISMIC SITE CLASS D
S_s = 1.50 (REDUCED FROM 2.40 PER ASCE 7-05, 12.8.1.3 FOR A BUILDING WITHOUT IRREGULARITIES)
S_1 = 1.20
S_{DS} = 1.0
S_{D1} = 1.20
SEISMIC DESIGN CATEGORY E
SEISMIC RESISTING SYSTEM:
-SPECIAL REINFORCED CONCRETE SHEAR WALL
RESPONSE MODIFICATION FACTOR (R) 6
RESPONSE COEFFICIENT (Cs) 0.167
SEISMIC ANALYTICAL PROCEDURE = EQUIV LATERAL FORCE
SEISMIC BASE SHEAR 690 kN

APPROVED:

A/E DESIGNER OF RECORD

SEAL:

US ARMY CORPS OF ENGINEERS
AFGHANISTAN ENGINEER DISTRICT

Mark	Description	Date	Appr.

Designed by: KMP/MMY
Date: 2/23/10
Rev. 0
Dwn by: RCG
Ckd by: CWW
Design file no.
Reviewed by: LHM
Drawing code:
Submitted by: BAKER
File name: ANATCOS-001
Plot date: 6/4/2010
Plot scale: X:X

U.S. ARMY CORPS OF ENGINEERS
AFGHANISTAN ENGINEER DISTRICT
APO AE 09356

Michael Baker Jr., Inc.
A unit of Michael Baker Corporation
Airside Business Park
100 Airside Drive
Moon Township, PA 15108
www.mbakercorp.com

STANDARD DESIGN
VARIOUS PROJECTS
VARIOUS LOCATIONS, AFGHANISTAN

ADMIN TRAINING COMPANY

GENERAL NOTES & DESIGN CRITERIA

Sheet reference number:
S-001

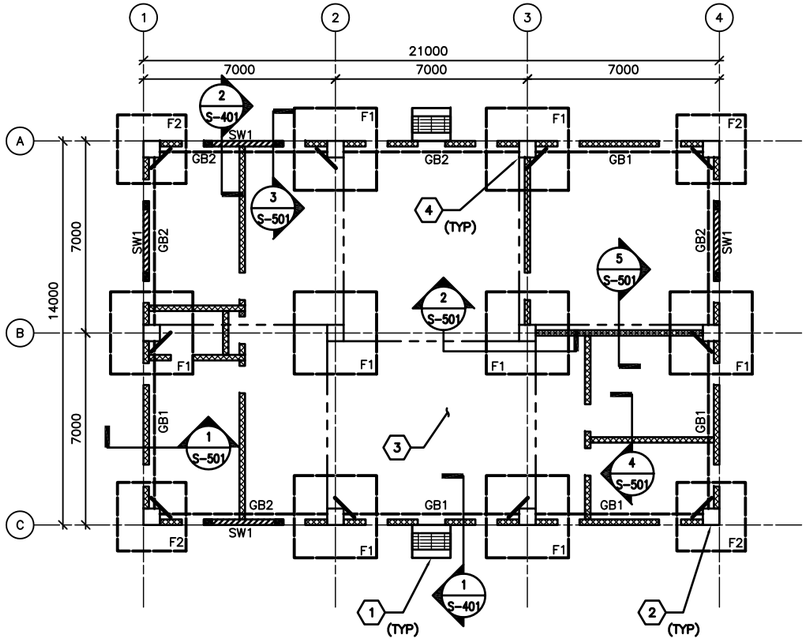

1 S-101 FOUNDATION/SLAB PLAN

SCALE: 1:100

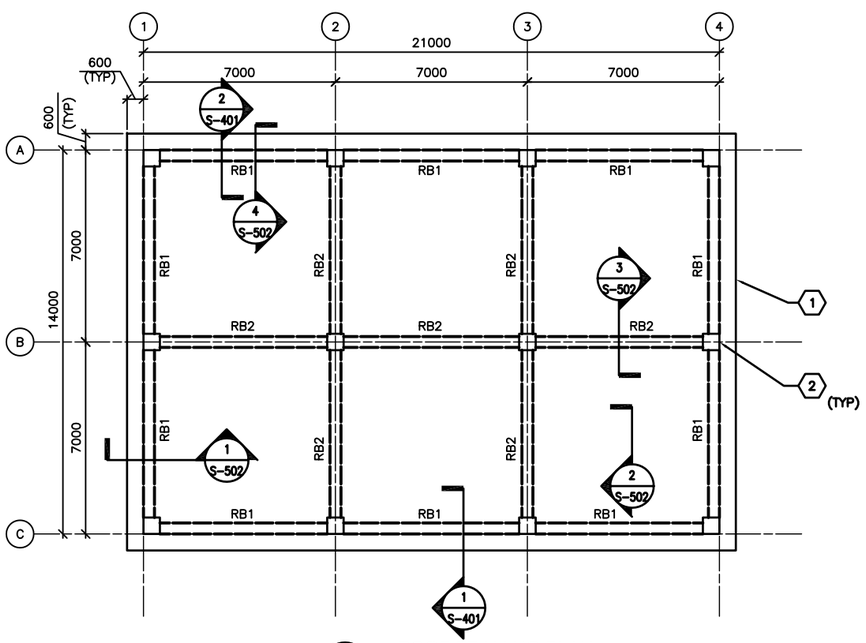

2 S-101 ROOF FRAMING PLAN

SCALE: 1:100

FOUNDATION/SLAB PLAN NOTES:

1. REFER TO SHEET S-001 FOR STRUCTURAL NOTES AND DESIGN CRITERIA.
2. FINISH FIRST FLOOR ELEVATION SHALL BE (DATUM 0.00) ALL PLUS OR MINUS DIMENSIONS INDICATED ON PLAN OR REFERRED TO IN NOTES RELATE TO FINISH FLOOR ELEVATION.
3. SLAB-ON-GRADE IS 150 WITH #13 @ 300 OC EW LOCATED 38 FROM T/SLAB.
4. TOP OF EXTERIOR FOOTINGS SHALL BE -950 UNLESS OTHERWISE INDICATED.
5. TOP OF INTERIOR FOOTINGS WITHOUT GRADE BEAM ABOVE SHALL BE -600.
6. COLUMN FOOTINGS INDICATED BY F# ON PLAN. REFER TO COLUMN FOOTING SCHEDULE ON SHEET S-601.
7. REFER TO COLUMN SCHEDULE ON SHEET S-601.
8. GRADE BEAM INDICATED BY GB# ON PLAN, REFER TO BEAM SCHEDULE ON SHEET S-601.
9. SHEARWALL INDICATED BY SW# ON PLAN, REFER TO SHEARWALL SCHEDULE ON SHEET S-601.
10. SEE TYP EXTERIOR AND INTERIOR CMU WALL REINF DETAIL ON SHEET S-701.
11. SEE MECHANICAL AND ELECTRICAL SHEETS FOR CONCRETE PAD LOCATIONS, SIZES, AND THICKNESS NOT SHOWN. SEE SHEET S-701 FOR DETAILS.
12. THICKENED SLAB UNDER CMU PERIMETER/PARTITION WALLS NOT SHOWN FOR CLARITY.

FOUNDATION/SLAB PLAN KEY NOTES: (X)

1. CONC SLAB (ENTRANCE)-SEE ARCH DWGS FOR INFORMATION
2. REINF CONC COLUMN
3. REINF CONC SLAB-ON-GRADE
4. (2)-#13 RE-ENTRANT CORNER BARS - SEE S-701 FOR INFORMATION

FOUNDATION/SLAB PLAN LEGEND:

REINF CONC SHEAR WALL

REINF CMU WALL

CONTROL JOINT

ROOF FRAMING PLAN NOTES:

1. REFER TO SHEETS S-001 FOR STRUCTURAL NOTES AND DESIGN CRITERIA.
2. TOP OF SLAB ELEVATION = 3600 UNLESS NOTED OTHERWISE.
3. ROOF SLAB IS 250 WITH #16 @ 300 OC EW T&B.
4. ROOF BEAM INDICATED BY RB# ON PLAN. REFER TO BEAM SCHEDULE ON SHEET S-601.
5. COORDINATE WITH ARCHITECTURAL SHEETS FOR COLD-FORMED STEEL OVERBUILD FRAMING ABOVE ROOF SLAB.
6. COLD-FORMED METAL OVERBUILD ROOF FRAMING NOT SHOWN FOR CLARITY. SEE OVERBUILD ROOF FRAMING DETAILS AND SECTIONS ON SHEET S-702.
7. CMU PERIMETER/PARTITION WALLS (BELOW ROOF SLAB) NOT SHOWN FOR CLARITY.
8. OVERHANG AREAS OF ROOF SLAB CONTAIN ROOF VENT PENETRATIONS. REFERENCE ARCHITECTURAL DRAWINGS FOR INFORMATION.

ROOF FRAMING PLAN KEY NOTES: (X)

1. CONC ROOF SLAB (BELOW ROOF OVERBUILD)
2. REINF CONC COLUMN (BELOW CONC ROOF SLAB)

0 2000 4000
SCALE: 1:100

UNLESS OTHERWISE NOTED, LINEAR DIMENSIONS SHOWN ON DRAWINGS ARE IN MILLIMETERS (mm)

US ARMY CORPS OF ENGINEERS
AFGHANISTAN

Mark	Description	Date	Appr.	Mark	Description	Date	Appr.

Rev: 0
Date:
Design file no.
Drawing code:
File name:
Plot date:
Plot scale: X:X

Designed by: KMP/MMY
Dwn by: RCC
Ckd by: CWW
Reviewed by: LHM
Submitted by: BAKER

U.S. ARMY CORPS OF ENGINEERS
AFGHANISTAN ENGINEER DISTRICT
APO A

STANDARD DESIGN
VARIOUS PROJECTS
VARIOUS LOCATIONS, AFGHANISTAN

ADMIN TRAINING COMPANY

FOUNDATION/SLAB & ROOF FRAMING PLANS

Sheet reference number:
S-101

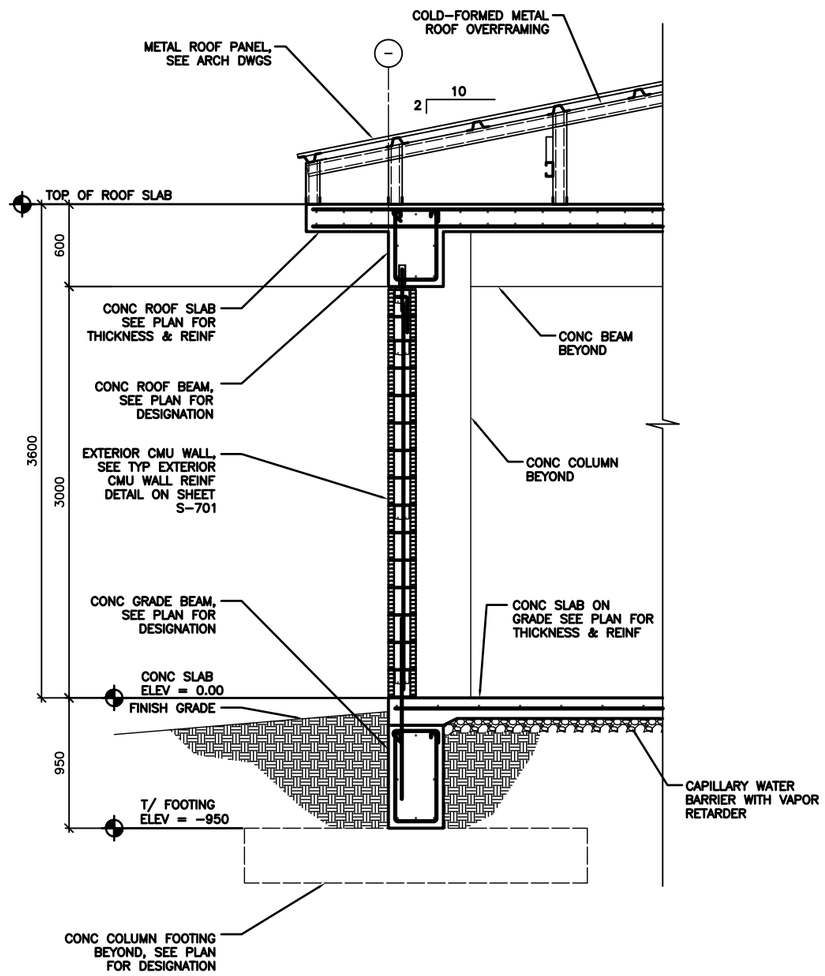

1 S-101 TYPICAL WALL SECTION AT EXTERIOR MASONRY WALL

SCALE: 1:20

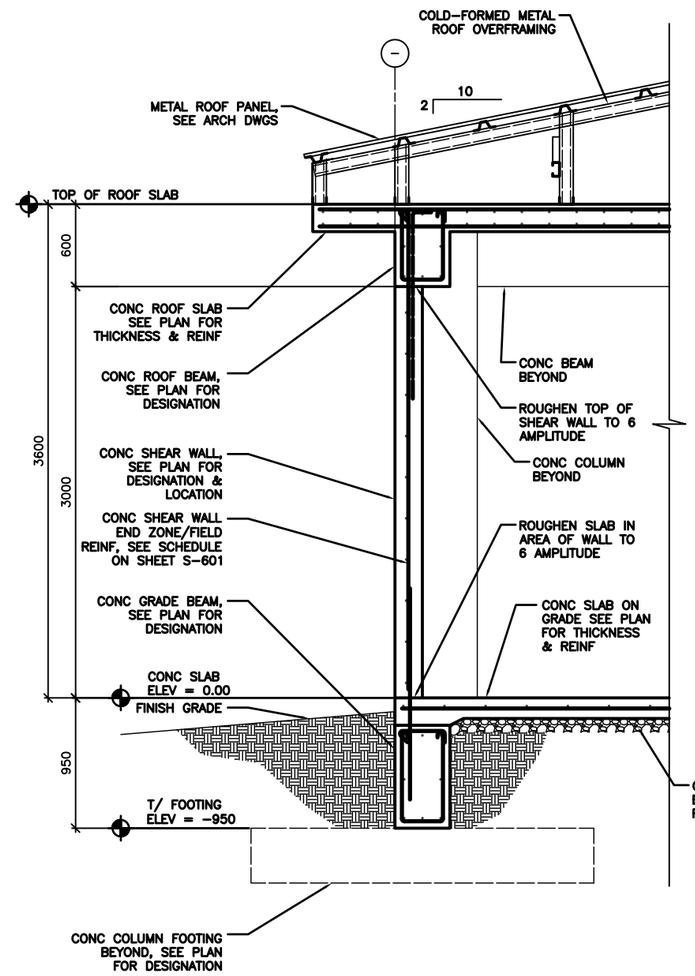

2 S-101 TYPICAL WALL SECTION AT CONCRETE SHEAR WALL

SCALE: 1:20

0 400 800
SCALE: 1:20

UNLESS OTHERWISE NOTED, LINEAR DIMENSIONS SHOWN ON DRAWINGS ARE IN MILLIMETERS (mm)

APPROVED:

A/E DESIGNER OF RECORD

SEAL:

US ARMY CORPS OF ENGINEERS
AFGHANISTAN ENGINEER DISTRICT

Mark	Description	Date	Appr.	Mark	Description	Date	Appr.

Designed by: KMP/MMY
Dwn by: RCC
Ckd by: CWW
Reviewed by: LHM
Submitted by: BAKER
Date: 2/23/10
Rev: 0
Design file no.
Drawing code:
File name: AAAATCS-s401
Plot date: 6/4/2010
Plot scale: 8.00

U.S. ARMY CORPS OF ENGINEERS
AFGHANISTAN ENGINEER DISTRICT
APO AE 96338

Michael Baker Jr., Inc.
A unit of Michael Baker Corporation
Airside Business Park
100 Airside Drive
Moon Township, PA 15108
www.mbakercorp.com

STANDARD DESIGN
VARIOUS PROJECTS
VARIOUS LOCATIONS, AFGHANISTAN

ADMIN TRAINING COMPANY

BUILDING SECTIONS

Sheet reference number:
S-401

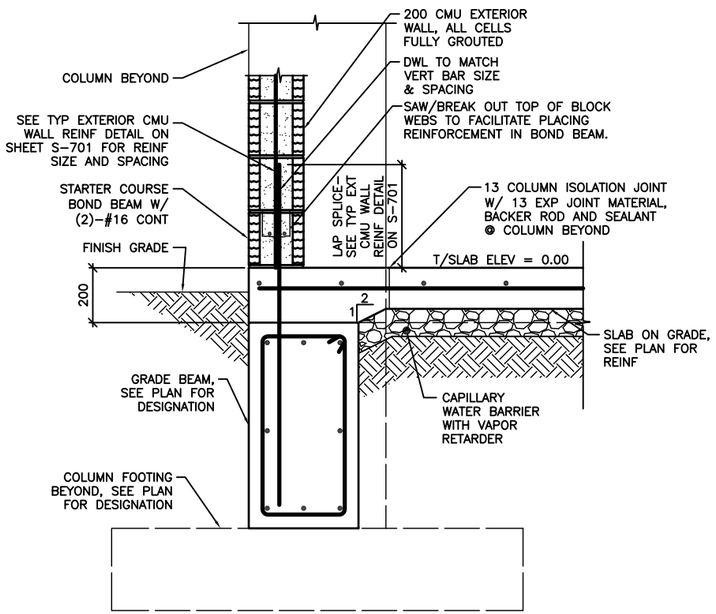

NOTE:
1. SECTION IS SIMILAR FOR INTERIOR CMU PARTITIONS OVER GRADE BEAMS SHOWING THICKENED 200 CONC SLAB AREA.

1 S-101 SECTION
SCALE: 1:10

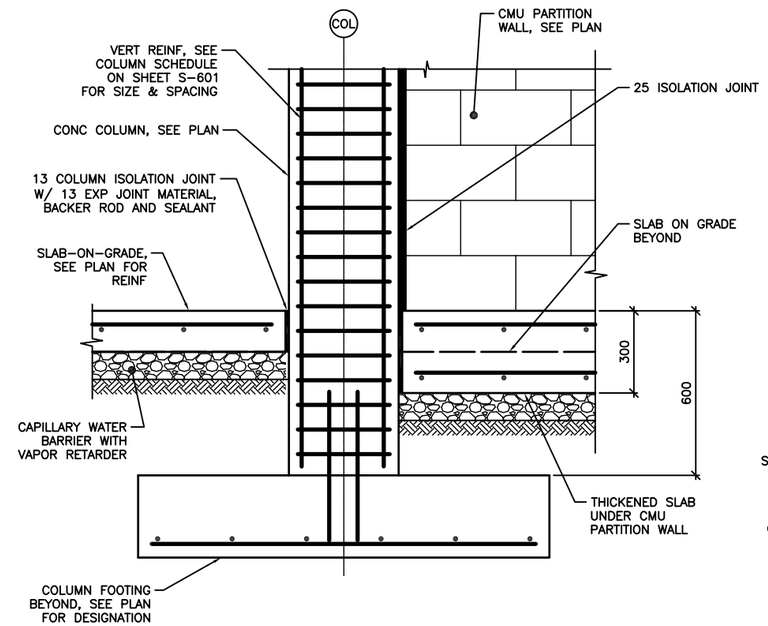

2 S-101 SECTION
SCALE: 1:10

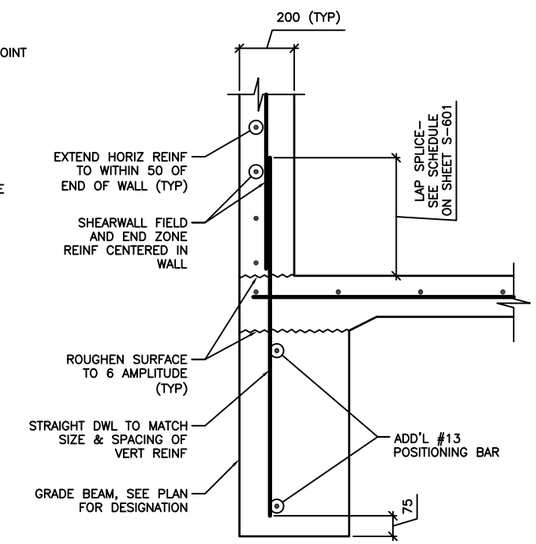

NOTE:
1. SECTION DEPICTS SHEAR WALL TERMINATION ONLY. GRADE BEAM REINFORCING NOT SHOWN FOR CLARITY
2. SEE SHEET S-601 AND SHEET S-702 FOR SCHEDULED FIELD AND END ZONE REINF.

3 S-101 SECTION
SCALE: 1:10

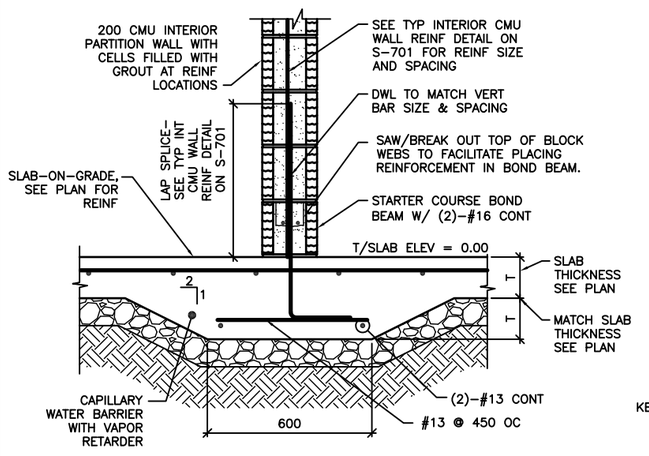

4 S-101 SECTION
SCALE: 1:10

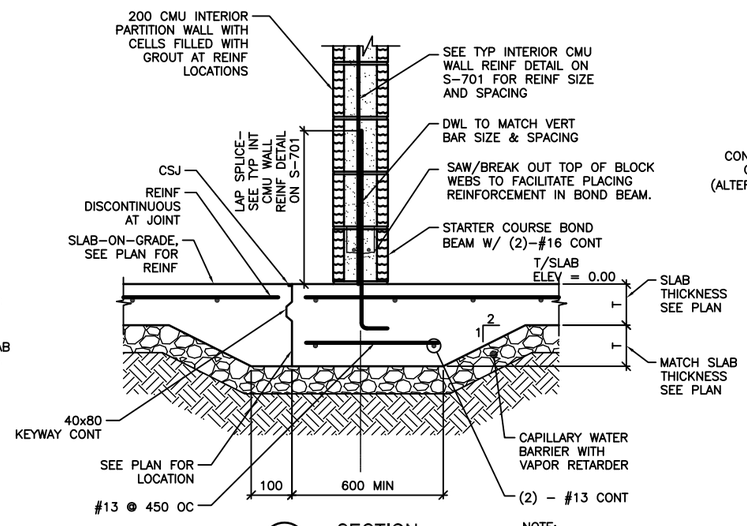

5 S-101 SECTION
SCALE: 1:10

NOTE:
1. DETAIL IS APPLICABLE AT CONTROL JOINTS RUNNING PARALLEL TO CMU WALLS AND WITHIN 300 OF FACE OF WALL.

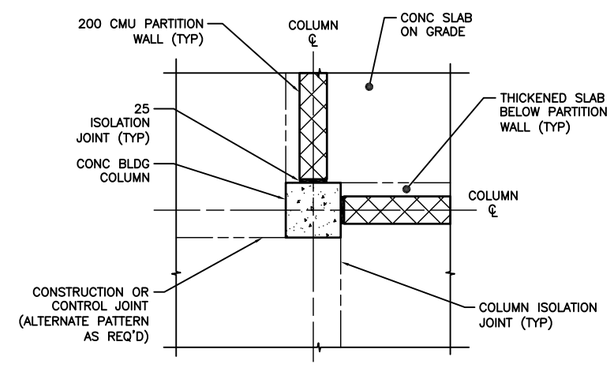

A S-501 COLUMN ISOLATION JOINT DETAIL
SCALE: NTS

0 200 400
SCALE: 1:10

UNLESS OTHERWISE NOTED, LINEAR DIMENSIONS SHOWN ON DRAWINGS ARE IN MILLIMETERS (mm)

APPROVED:

A/E DESIGNER OF RECORD

SEAL:

US ARMY CORPS OF ENGINEERS
AFGHANISTAN ENGINEER DISTRICT

Mark	Description	Date	Appr.	Mark	Description	Date	Appr.

Rev: 0
Date: 2/23/10
Design file no.
Drawing code:
File name: AANATC05-S01
Plot date: 6/4/2010
Plot scale: 1:1

Designed by: KCP / MMY
Dwn by: RCC
Ckd by: CWW
Reviewed by: LHM
Submitted by: BAKER

U.S. ARMY CORPS OF ENGINEERS
AFGHANISTAN ENGINEER DISTRICT
APO AE 96338

Michael Baker Jr., Inc.
A unit of Michael Baker Corporation
Airside Business Park
100 Airport Drive
Moon Township, PA 15108
www.mbakercorp.com

STANDARD DESIGN
VARIOUS PROJECTS
VARIOUS LOCATIONS, AFGHANISTAN

ADMIN TRAINING COMPANY

FOUNDATION SECTIONS

Sheet reference number:
S-501

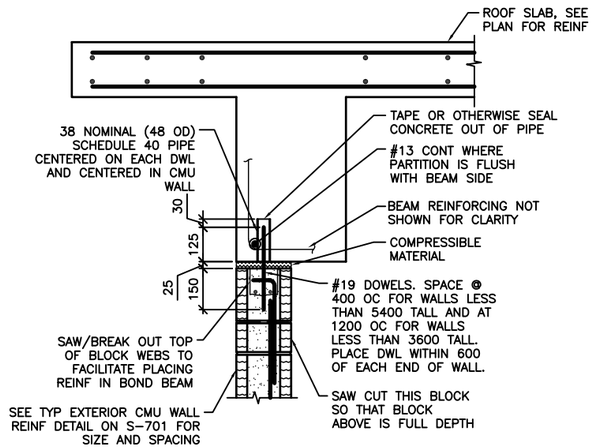

NOTES:
1. EXTEND DOWEL REINF TO 25 CLEAR FROM TOP OF CMU WALL.

1 S-101 SECTION
SCALE: 1:10

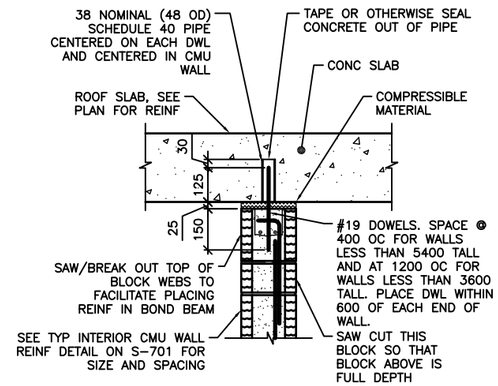

NOTES:
1. EXTEND DOWEL REINF TO 25 CLEAR FROM TOP OF CMU WALL.
2. SLAB REINF NOT SHOWN FOR CLARITY.

2 S-101 SECTION
SCALE: 1:10

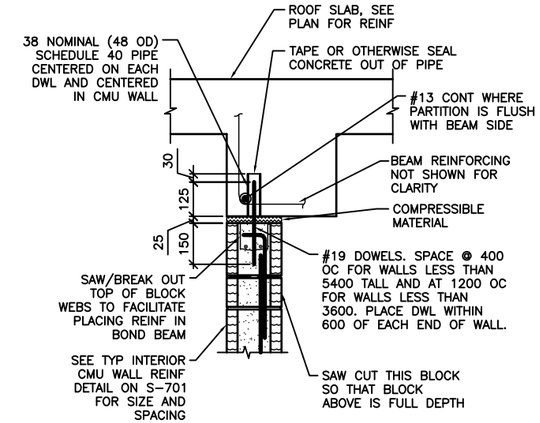

NOTES:
1. EXTEND DOWEL REINF TO 25 CLEAR FROM TOP OF CMU WALL.
2. PARTITION WALL MAY BE CENTERED UNDER THE BEAM OR FLUSH AS SHOWN. SEE PLAN FOR LOCATION.
3. SLAB REINF NOT SHOWN FOR CLARITY.

3 S-101 SECTION
SCALE: 1:10

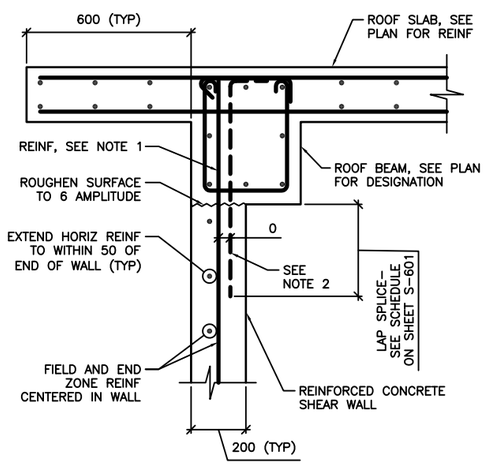

NOTES:
1. TERMINATE "FIELD" VERT REINF & END ZONE REINF @ 50 CLEAR FROM TOP OF ROOF SLAB.
2. WHERE END ZONE REINFORCING CANNOT BE DEVELOPED IN BEAM DEPTH, PROVIDE HOOKED DWLS SAME SIZE & SPACING. PROVIDE TENSION LAP BELOW ROOF BEAM.
3. SEE SHEET S-601 AND SHEET S-702 FOR SCHEDULED FIELD AND END ZONE REINF.

4 S-101 SECTION
SCALE: 1:10

0 200 400
SCALE: 1:10

UNLESS OTHERWISE NOTED, LINEAR DIMENSIONS SHOWN ON DRAWINGS ARE IN MILLIMETERS (mm)

APPROVED:

A/E DESIGNER OF RECORD

SEAL:

US ARMY CORPS OF ENGINEERS
AFGHANISTAN ENGINEER DISTRICT

Mark	Description	Date	Appr.	Mark	Description	Date	Appr.

Designed by: KMP/MMY
Date by: RCC
Dwg by: CWW
Date: 2/23/10
Design file no.
Rev: 0
Reviewed by: LHM
Drawing code:
Submitted by: BAKER
File name: AA0ATC05-502
Plot date: 6/4/2010
Plot scale: 1:01

U.S. ARMY CORPS OF ENGINEERS
AFGHANISTAN ENGINEER DISTRICT
APO AE 96338

Michael Baker Jr., Inc.
A unit of Michael Baker Corporation
Airside Business Park
100 Airside Drive
Moon Township, PA 15108
www.mbakercorp.com

STANDARD DESIGN
VARIOUS PROJECTS
VARIOUS LOCATIONS, AFGHANISTAN

ADMIN TRAINING COMPANY

FRAMING SECTIONS

Sheet reference number:
S-502

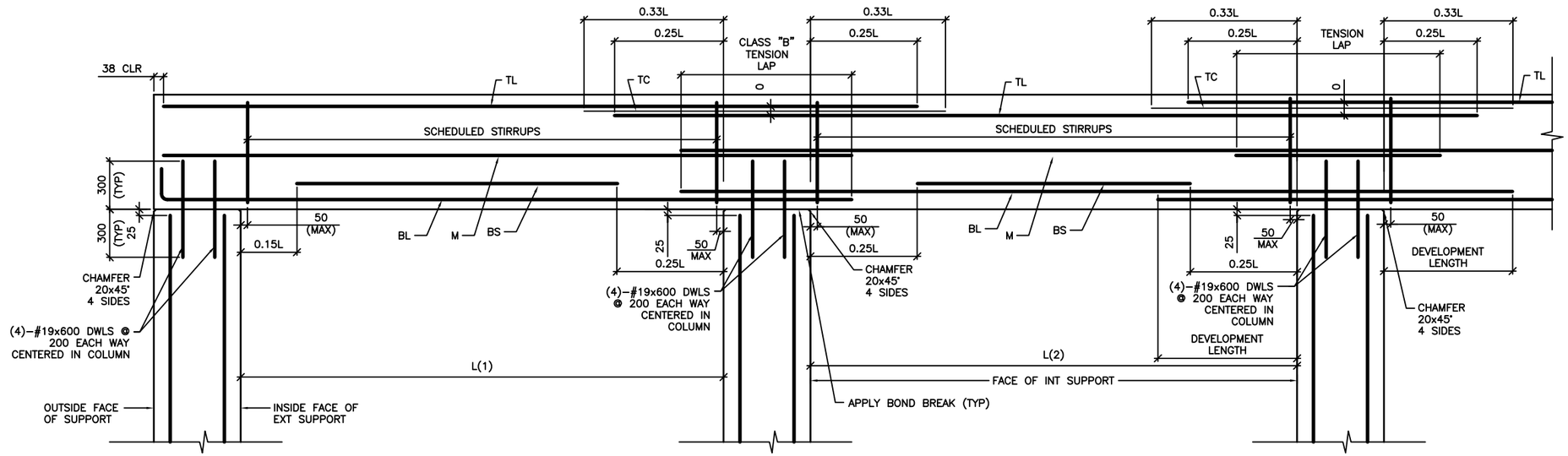

DETAIL NOTE:
1. WORK THIS DETAIL WITH BEAM SCHEDULE ON SHEET S-601.
2. L=GREATEST OF ADJACENT SPANS L(1) OR L(2)
3. ONLY COLUMN CORNER BARS ARE SHOWN

1 S-503 ROOF BEAM REINFORCING DETAIL

SCALE: NTS

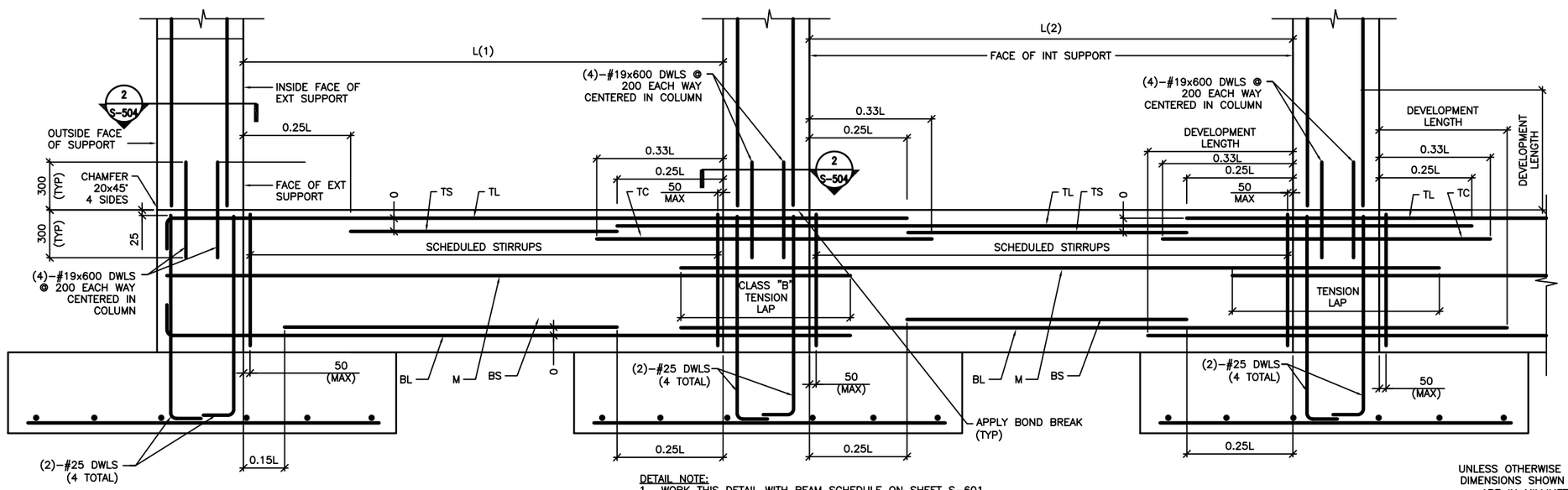

DETAIL NOTE:
1. WORK THIS DETAIL WITH BEAM SCHEDULE ON SHEET S-601.
2. L=GREATEST OF ADJACENT SPANS L(1) OR L(2)
3. ONLY COLUMN CORNER BARS ARE SHOWN.

2 S-503 GRADE BEAM REINFORCING DETAIL

SCALE: NTS

UNLESS OTHERWISE NOTED, LINEAR DIMENSIONS SHOWN ON DRAWINGS ARE IN MILLIMETERS (mm)

APPROVED:

A/E DESIGNER OF RECORD

SEAL:

US ARMY CORPS OF ENGINEERS
AFGHANISTAN ENGINEER DISTRICT

Mark	Description	Date	Appr.	Mark	Description	Date	Appr.

Designed by: KMP/MMY
Date: 2/23/10
Rev: 0
Drawn by: RCS
Checked by: CWW
Design file no.
Reviewed by: LHM
Drawing code:
Submitted by:
File name: AAN-NTC05-503
Plot date: 6/4/2010
Plot scale: 1:X

U.S. ARMY CORPS OF ENGINEERS
AFGHANISTAN ENGINEER DISTRICT
APO AE 96338

Michael Baker Jr., Inc.
A unit of Michael Baker Corporation
Airside Business Park
100 Airside Drive
Moon Township, PA 15108
www.mbakercorp.com

STANDARD DESIGN
VARIOUS PROJECTS
VARIOUS LOCATIONS, AFGHANISTAN

ADMIN TRAINING COMPANY

BEAM & COLUMN DETAILS

BAKER

Sheet reference number:
S-503

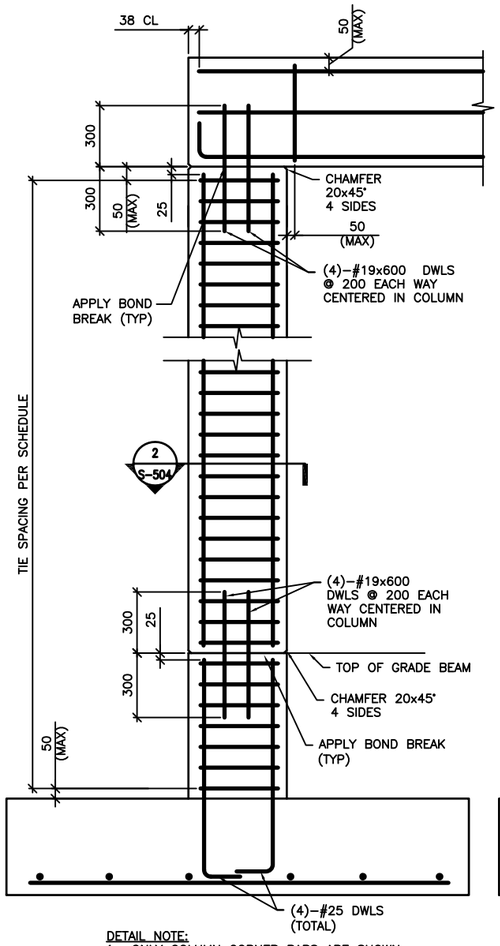

DETAIL NOTE:
1. ONLY COLUMN CORNER BARS ARE SHOWN

1 S-504 1-STORY COLUMN REINF DETAILS
SCALE: NTS
(WITH GRADE BEAM)

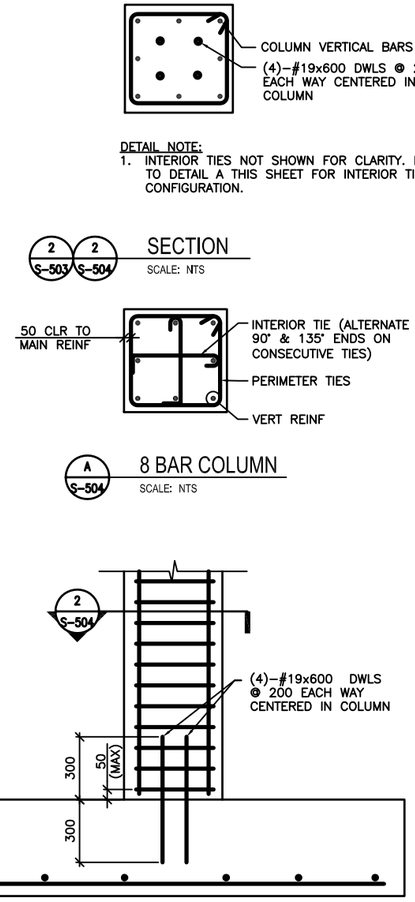

DETAIL NOTE:
1. ONLY COLUMN CORNER BARS ARE SHOWN

1 S-504 1-STORY COLUMN REINF DETAILS
SCALE: NTS
(WITHOUT GRADE BEAM)

DETAIL NOTE:
1. INTERIOR TIES NOT SHOWN FOR CLARITY. REFER TO DETAIL A THIS SHEET FOR INTERIOR TIE CONFIGURATION.

2 S-503 2 S-504 SECTION
SCALE: NTS

A S-504 8 BAR COLUMN
SCALE: NTS

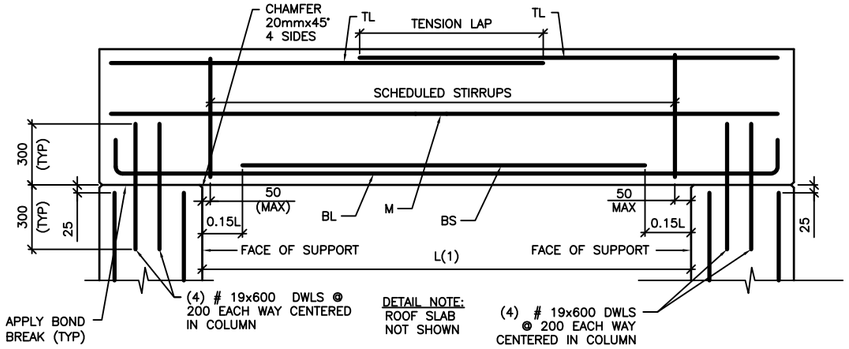

3 S-504 SINGLE SPAN ROOF BEAM REINFORCING DETAIL
SCALE: NTS

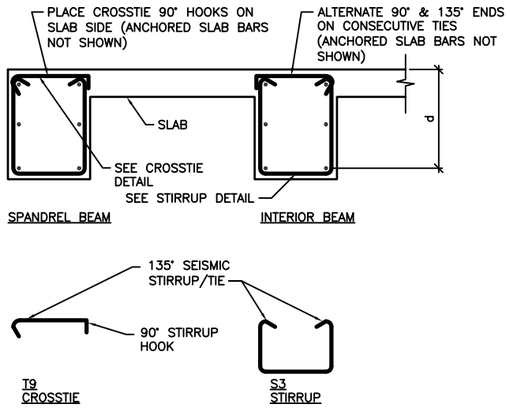

B S-504 BEAM REINFORCEMENT DETAILS
SCALE: NTS

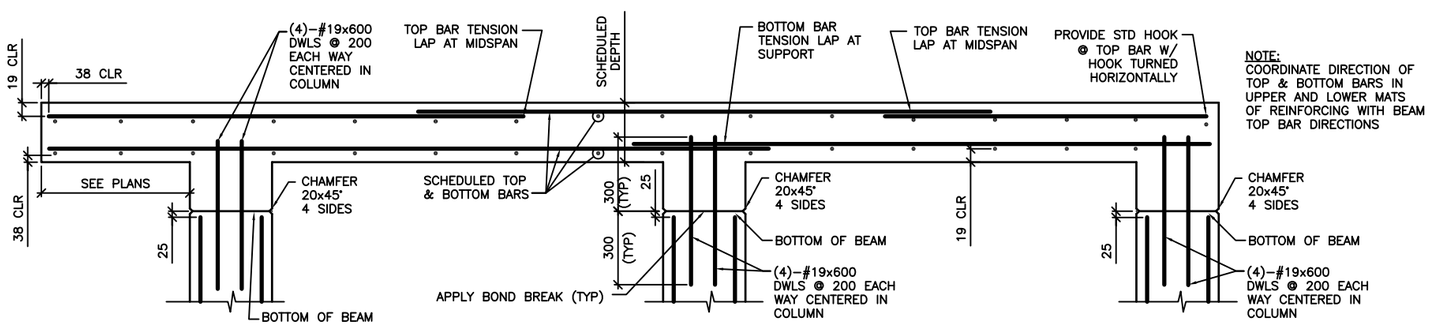

NOTE:
COORDINATE DIRECTION OF TOP & BOTTOM BARS IN UPPER AND LOWER MATS OF REINFORCING WITH BEAM TOP BAR DIRECTIONS

4 S-504 FRAMED SLAB REINFORCING DETAIL
SCALE: NTS

UNLESS OTHERWISE NOTED, LINEAR DIMENSIONS SHOWN ARE IN MILLIMETERS (mm)

APPROVED:

A/E DESIGNER OF RECORD

SEAL:

US ARMY CORPS OF ENGINEERS
AFGHANISTAN ENGINEER DISTRICT

Mark	Description	Date	Appr.	Mark	Description	Date	Appr.

Date: 2/23/10 | Rev: 0
Design file no.
Drawing code:
File name: AAMATCOS-504
Plot date: 6/4/2010
Plot scale: X/X

Designed by: KMP/AMY | Dwn by: RCS | Ckd by: CWW
Reviewed by: LHM
Submitted by: BAKER

U.S. ARMY CORPS OF ENGINEERS
AFGHANISTAN ENGINEER DISTRICT
APO AE 96338

Michael Baker, Jr., Inc.
A unit of Michael Baker Corporation
Airside Business Park
100 Airport Drive
Moon Township, PA 15108
www.mbakercorp.com

STANDARD DESIGN
VARIOUS PROJECTS
VARIOUS LOCATIONS, AFGHANISTAN

ADMIN TRAINING COMPANY

BEAM & COLUMN DETAILS

Sheet reference number:
S-504

CONCRETE REINFORCEMENT TENSION DEVELOPMENT/LAP SPLICE SCHEDULE

f'c = 28 MPa	LAP CLASS	UNCOATED BARS			
		TOP BARS		OTHER BARS	
BAR SIZES		CASE 1	CASE 2	CASE 1	CASE 2
#10 TO #19	A	50 BAR DIA	74 BAR DIA	38 BAR DIA	57 BAR DIA
	B	64 BAR DIA	96 BAR DIA	50 BAR DIA	74 BAR DIA
#22 TO #57	A	62 BAR DIA	93 BAR DIA	48 BAR DIA	71 BAR DIA
	B	80 BAR DIA	121 BAR DIA	62 BAR DIA	93 BAR DIA

NOTES:
1. TABULATED TENSION DEVELOPMENT LENGTH VALUES ARE TAKEN FROM CRSI DESIGN HANDBOOK 2008 10TH ED.
2. TENSION DEVELOPMENT & TENSION LAP SPLICE LENGTHS ARE EXPRESSED AS MULTIPLES OF BAR DIAMETERS.
3. TABULATED VALUES ARE BASED ON MINIMUM YIELD STRENGTH OF REINFORCEMENT, fy, OF 420MPa.
4. CONCRETE IS NORMAL WEIGHT (2400Kg/m^3) AND 28 DAY COMPRESSIVE STRENGTH = 28MPa.
5. TABULATED VALUES FOR BEAMS & COLUMNS ARE BASED ON TRANSVERSE REINFORCEMENT AND CONCRETE COVER MEETING MINIMUM CODE REQUIREMENTS.
6. CASES 1 & 2, WHICH DEPEND ON THE TYPE OF STRUCTURAL MEMBER, CONCRETE COVER, AND CENTER-TO-CENTER SPACING OF THE BARS ARE DEFINED IN THE TABLE BELOW.
7. LAP SPLICE LENGTHS (MINIMUM 300mm) ARE MULTIPLES OF TENSION DEVELOPMENT LENGTHS: CLASS A = 1.0(TENSION DEVELOPMENT LENGTH) & CLASS B = 1.3(TENSION DEVELOPMENT LENGTH)
8. TOP BARS ARE HORIZONTAL REINFORCEMENT WITH MORE THAN 300mm OF CONCRETE CAST BELOW THE BARS.
9. IT SHALL BE PERMISSIBLE TO CALCULATE WALL AND SLAB REINFORCEMENT TENSION DEVELOPMENT/SPLICE LENGTHS IN ACCORDANCE WITH ACI 12.2.3 OR TABLE 5.3(b) OF CRSI 2008 IN LIEU OF VALUES TABULATED ABOVE.

BEAMS, COLUMNS	CASE 1	CONCRETE COVER AT LEAST 1 BAR DIA AND CENTER-TO-CENTER SPACING AT LEAST 2 BAR DIA
	CASE 2	CONCRETE COVER LESS THAN 1 BAR DIA OR CENTER-TO-CENTER SPACING LESS THAN 2 BAR DIA
ALL OTHERS	CASE 1	CONCRETE COVER AT LEAST 1 BAR DIA AND CENTER-TO-CENTER SPACING AT LEAST 3 BAR DIA
	CASE 2	CONCRETE COVER LESS THAN 1 BAR DIA OR CENTER-TO-CENTER SPACING LESS THAN 3 BAR DIA

CONCRETE COVER SCHEDULE

MINIMUM CONCRETE COVER PROTECTION FOR REINFORCEMENT BARS SHALL BE AS LISTED BELOW: (SEE ACI 318M-05, SECTION 7.7 FOR CONDITIONS NOT NOTED). DIMENSIONS FOR BAR PLACEMENT GIVEN IN SECTIONS AND DETAILS SHALL SUPERSEDE MINIMUM COVER REQUIREMENTS GIVEN HERE. DIMENSIONS ARE IN mm. PROVIDE STANDARD BAR CHAIRS AND SUPPORT BARS @1200mm MAXIMUM AS REQUIRED TO MAINTAIN CONCRETE PROTECTION SPECIFIED.

FOOTINGS (EARTH FORMED):		70
COLUMNS / PIERS (TO TIES)		40
GRADE BEAMS OR SLAB TURNED DOWN EDGES:		
TOP		40
BOTTOM (EARTH FORMED)		70
SIDES (EARTH FORMED)		70
SIDES (BOARD FORMED)	#16 BAR & SMALLER	40
	#19 THRU #36 BAR	50
ELEVATED BEAMS & SLABS:		
BEAM TIES & STIRRUPS (NOT EXPOSED TO WEATHER)		40
BEAM TIES & STIRRUPS (EXPOSED TO WEATHER)		50
FLOOR SLABS (NOT EXPOSED TO WEATHER)		20
FLOOR SLABS (EXPOSED TO WEATHER)		
#19 & LARGER		50
#13 & SMALLER		40
ROOF SLAB BARS		25
SLABS ON GRADE		
NOT EXPOSED TO WEATHER (FROM TOP)		20
EXPOSED TO WEATHER (FROM TOP)		40
UTILITY TUNNEL WALLS, RETAINING WALLS AND SHEAR WALLS. (NO SURFACES SHALL BE EARTH FORMED)		
EARTH SIDE AND FRONT SIDE (EXPOSED TO WEATHER)		
#16 BAR AND SMALLER		40
#19 THRU #36 BAR		50

COLUMN FOOTING SCHEDULE

MARK	FOOTING SIZE (mm)			FOOTING REINFORCING	REMARKS
	LENGTH	WIDTH	THICKNESS		
F1	3000	3000	300	(8)-#22 EW BOTT	-----
F2	2500	2500	250	(7)-#19 EW BOTT	-----

CONCRETE SHEAR WALL SCHEDULE

MARK	TYPE	WALL LENGTH (L) (mm)	WALL REINFORCEMENT		REMARKS
			END ZONE	FIELD	
SW1	A	2900	(5)-#19 @ 220mm OC	#13 @ 300mm OC	-----

NOTES:
1. WORK THIS SCHEDULE WITH SHEAR WALL DETAILS ON SHEETS S-702
2. SEE PLAN FOR LOCATION OF SHEAR WALL(S).
3. VERTICAL "FIELD" BARS MAY BE OMITTED IN LOCATION OF "END ZONE" REINFORCEMENT.
4. WALL FIELD REINF LISTED APPLIES TO VERT & HORIZ BARS.
5. WALL FIELD REINFORCEMENT CENTERED IN WALL.

STANDARD HOOKS IN TENSION PER (ACI 318M-05)

HOOK DEVELOPMENT LENGTH (mm)	
BAR SIZE	f'c 28 MPa
#10	180
#13	250
#16	300
#19	380
#22	430
#25	480
#29	560
#32	610
#36	690

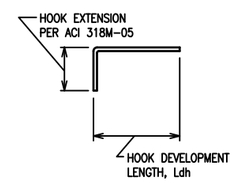

NOTES:
1. CONCRETE IS NORMAL WEIGHT CONCRETE.
2. BAR YIELD STRENGTH, fy = 420 MPa
3. SIDE COVER REQUIREMENTS OF ACI SECT. 12.5.3 ARE ASSUMED TO NOT BE MET.
4. TIE OR STIRRUP REQUIREMENTS OF ACI SECT. 12.5.3 ARE ASSUMED TO NOT BE MET.
5. REDUCTION FOR EXCESS REINFORCEMENT IS NOT TAKEN.
6. HOOK DEVELOPMENT LENGTH IS VALID FOR 180° HOOKS ALSO.

MASONRY LAP SPLICE SCHEDULE

BAR SIZE	MINIMUM LAP SPLICE (Ld) FOR CMU REINFORCING
#10	450
#13	600
#16	750
#19	900
#22	1050
#25	1200

CMU OR CAST IN PLACE CONC LINTEL SCHEDULE (TYP)

OPENING TYPE OR SIZE, BEAM LOCATION OR TYPE	MAX SPAN (mm)	LINTEL DEPTH (mm)	REINFORCING BOTTOM
WALL OPENING	4000	600	(2)-#16 T&B
WALL OPENING	1900	400	(2)-#16 T&B
WALL OPENING	1000	400	(2)-#13 B

1. STRUCTURAL SHEETS DO NOT INDICATE ALL OPENINGS IN MASONRY WALLS. VERIFY NUMBER, SIZE AND LOCATION OF ALL OPENINGS IN MASONRY WALLS FROM ARCHITECTURAL SHEETS AND APPROVED PLUMBING, MECHANICAL, AND ELECTRICAL SHOP DRAWINGS.
2. PROVIDE 200mm BEARING EA END.
3. FOR HEAD DETAILS REFER TO ARCHITECTURAL SHEETS.
4. REINFORCING SHALL BE ASTM A615M, GRADE 420. GROUT FOR CMU LINTELS SHALL HAVE A MINIMUM COMPRESSIVE STRENGTH OF 14 MPa AT 28 DAYS.
5. CONTRACTOR SHALL SUBMIT FOR APPROVAL SHOP DRAWINGS AND SCHEDULES SHOWING SIZE, SPAN, REINFORCEMENT, DETAILS, LOCATIONS, ETC.

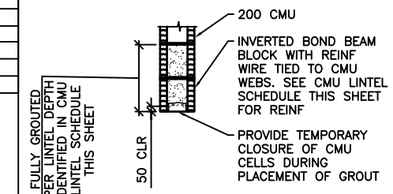

A S-601 LINTEL DETAIL
SCALE: NTS

BEAM SCHEDULE

MARK	BEAM SIZE (mm)		BEAM REINFORCING						STIRRUPS			REMARKS
	DEPTH	WIDTH	BL	BS	TL	TS	TC	M	SIZE	TYPE	SPACING	-----
GRADE BEAMS												
GB1	750	400	(2)-#16	(1)-#16	(2)-#16	---	---	---	#13	S3 + T9	d/2	-----
GB2	750	400	(2)-#25	(1)-#25	(2)-#25	---	---	---	#13	S3 + T9	d/2	-----
ROOF BEAMS												
RB1	600	400	(2)-#22	(1)-#22	(2)-#19	---	---	---	#13	S3 + T9	d/2	-----
RB2	600	400	(2)-#19	(1)-#19	(2)-#19	---	---	---	#13	S3 + T9	d/2	OMIT "M" BARS IN INTERIOR BEAMS

NOTES:
1. WORK THIS SCHEDULE WITH BEAM REINFORCING DETAILS ON SHEETS S-503 AND S-504.
2. HOOKS SHOWN ON SECTIONS AND DETAILS SHALL BE 90° STD UON.
3. USE ONLY (1) TC AT BEAM COLUMN INTERSECTION WHERE REQ'D.

COLUMN SCHEDULE

COLUMN MARK / DESCRIPTION	TYP UON	---	---	---
TYPE	8-BAR	---	---	---
DIMENSIONS	600mm SQ	---	---	---
VERTICAL REINFORCEMENT	(8)-#25	---	---	---
TIES	#13 @ d/2	---	---	---
TOP OF ROOF ELEVATION	3600mm	---	---	---
TOP OF GRADE BEAM ELEVATION	-200mm	---	---	---
TOP OF FOOTING ELEVATION	-950mm	---	---	---

NOTES:
1. WORK THIS SCHEDULE WITH COLUMN DETAILS ON SHEET S-504.
2. SEE FOOTING SCHEDULE ON THIS SHEET FOR FOOTING INFORMATION.
3. COLUMN TIES: INTERIOR TIES TO MATCH SIZE & SPACING OF PERIMETER TIES.
4. HOOKS SHOWN ON SECTIONS & DETAILS SHALL BE 90° STD UON.

UNLESS OTHERWISE NOTED, LINEAR DIMENSIONS SHOWN ARE IN MILLIMETERS (mm)

APPROVED:

A/E DESIGNER OF RECORD

SEAL:

US ARMY CORPS OF ENGINEERS
AFGHANISTAN ENGINEER DISTRICT

Mark	Description	Date	Appr.	Mark	Description	Date	Appr.

Designed by: KMP/MMY
Dwn by: RCC
Ckd by: CWW
Reviewed by: LHM
Submitted by: BAKER
Date: 2/23/10
Rev: 0
Design file no.
Drawing code:
File name: AAMATCS-s601
Plot date: 6/4/2010
Plot scale: 8:X

U.S. ARMY CORPS OF ENGINEERS
AFGHANISTAN ENGINEER DISTRICT
APO, AE 96338

Michael Baker Jr., Inc
A unit of Michael Baker Corporation
Airside Business Park
100 Airside Drive
Moon Township, PA 15108
www.mbakercorp.com

STANDARD DESIGN
VARIOUS PROJECTS
VARIOUS LOCATIONS, AFGHANISTAN

ADMIN TRAINING COMPANY

SCHEDULES

Sheet reference number:
S-601

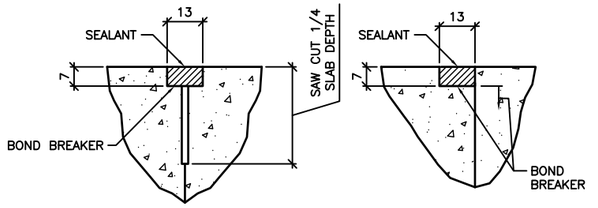

TYPICAL CONCRETE SLAB JOINT FINISH DETAILS

1 / S-701 SCALE: NTS

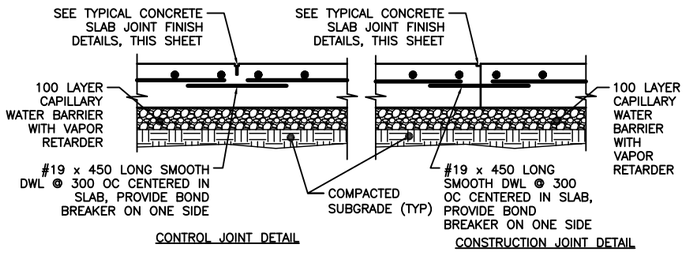

TYPICAL SLAB ON GRADE JOINT DETAIL

2 / S-701 SCALE: NTS

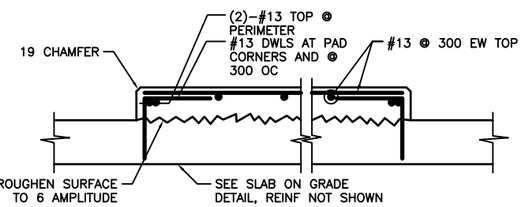

INTERIOR EQUIPMENT PAD DETAIL

3 / S-701 SCALE: NTS

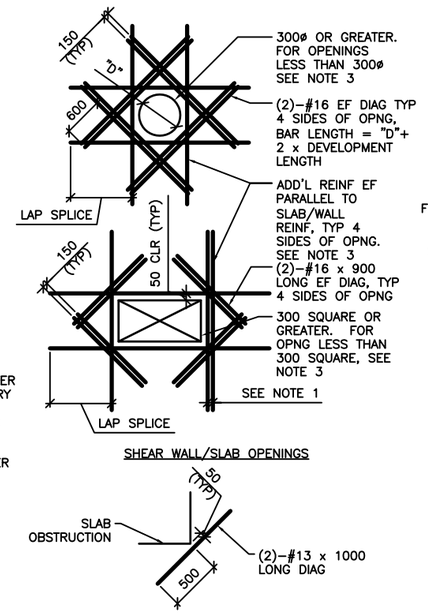

DETAIL NOTES:
1. WHERE MORE THAN ONE ADDITIONAL BAR IS REQUIRED PARALLEL TO THE EXISTING SLAB/WALL REINFORCING THE ADDITIONAL REINFORCING BARS SHALL BE SPACED AT 100 ON CENTER.
2. ADDITIONAL REINFORCING PARALLEL TO THE SLAB/WALL REINFORCING SHALL BE #16 BARS THAT PROVIDE A STEEL AREA ON EACH SIDE OF THE OPENING EQUAL TO 1/2 THE AREA OF THE REINFORCING CUT BY THE OPENING.
3. FOR OPENINGS WITH SIDES OR DIAMETERS LESS THAN 300 SPREAD THE SLAB/WALL REINFORCING TO CLEAR THE OPENING.

ADD'L CONCRETE REINFORCEMENT DETAILS

4 / S-701 SCALE: NTS

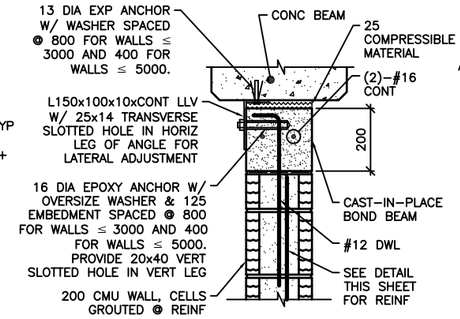

NOTE:
1. AT ANCHOR BOLTS, ADD AN ADDITIONAL 25 COMPRESSIBLE MATERIAL BELOW EXP ANCHOR HEAD.

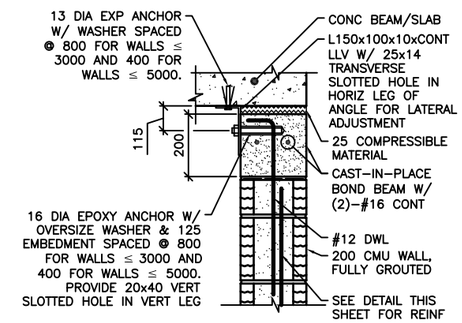

NOTES:
1. THIS DETAIL IS AN ALTERNATE TOP OF WALL ANCHORAGE DETAIL TO BE USED AT THE CONTRACTOR'S OPTION IN LIEU OF DETAILS SHOWN ON S-400 & S-500 DRAWINGS.
2. CAST-IN-PLACE BOND BEAM SHOWN AT TOP OF WALL IS ALSO APPLICABLE FOR INTERMEDIATE AND STARTER COURSE BOND BEAMS WITHIN WALL.

ALTERNATE TOP OF CMU WALL BRACING DETAILS

5 / S-701 SCALE: NTS

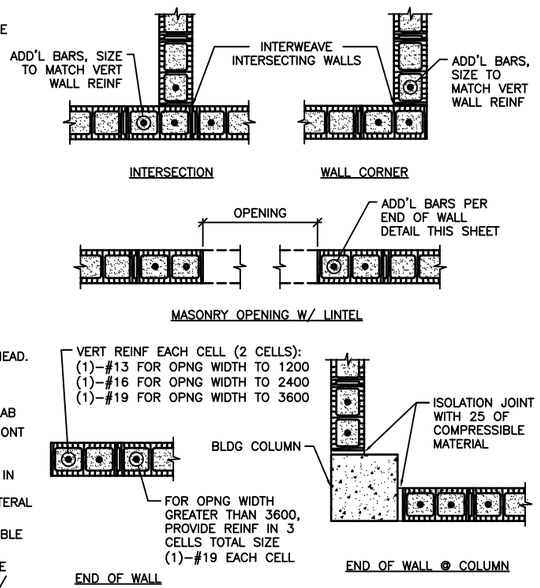

NOTES:
1. OPENING WIDTH SHALL NOT EXCEED 3600 FOR THIS TYPE OF JAMB.
2. ALL CELLS FULLY GROUTED AT EXTERIOR WALLS. AT INTERIOR WALLS, ONLY GROUT CELLS CONTAINING REINF.

TYP CMU DETAILS

6 / S-701 SCALE: NTS

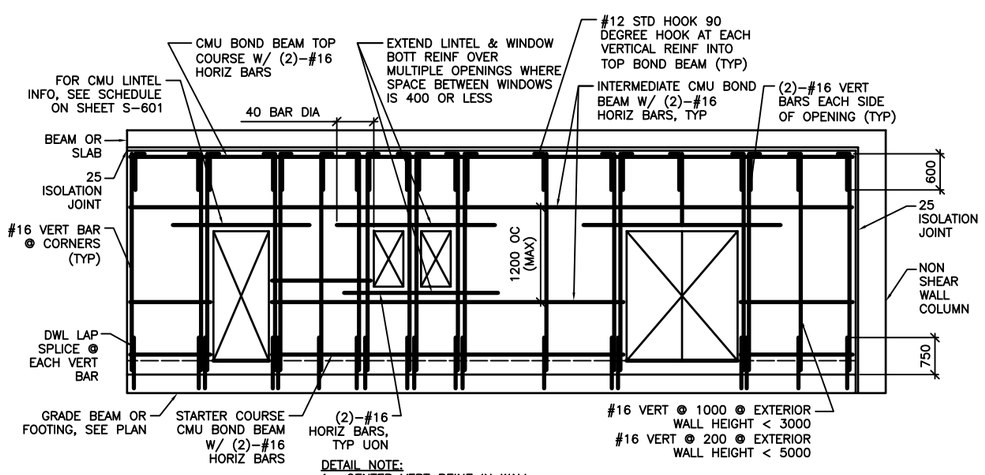

DETAIL NOTE:
1. CENTER VERT REINF IN WALL.
2. GROUT ALL CMU CELLS.
3. REFERENCE ARCH DWGS FOR JOINT INFORMATION
4. DOWELS BETWEEN TOP BOND BEAM AND BEAM/SLAB ABOVE (INCLUDING EMBEDDED PIPE SLEEVE) NOT SHOWN FOR CLARITY. SEE SPECIFIC S-500 SERIES DWGS FOR INFO.
5. FOR INFORMATION ON ALTERNATE CAST-IN-PLACE WALL BOND BEAMS, REFERENCE ALTERNATE TOP OF CMU WALL BRACING DETAILS THIS SHEET.

TYP EXTERIOR CMU WALL REINF DETAIL

7 / S-701 SCALE: NTS

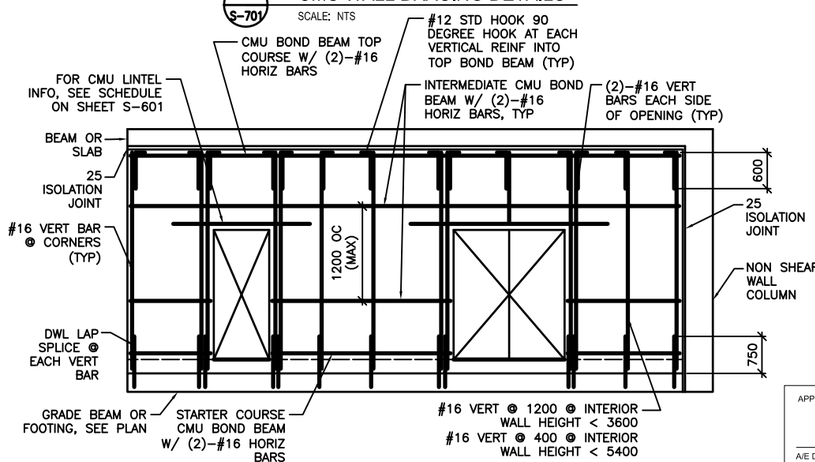

DETAIL NOTE:
1. CENTER VERT REINF IN WALL.
2. GROUT ALL CMU CELLS.
3. REFERENCE ARCH DWGS FOR JOINT INFORMATION
4. DOWELS BETWEEN TOP BOND BEAM AND BEAM/SLAB ABOVE (INCLUDING EMBEDDED PIPE SLEEVE) NOT SHOWN FOR CLARITY. SEE SPECIFIC S-500 SERIES DWGS FOR INFO.
5. FOR INFORMATION ON ALTERNATE CAST-IN-PLACE WALL BOND BEAMS, REFERENCE ALTERNATE TOP OF CMU WALL BRACING DETAILS THIS SHEET.

TYP INTERIOR CMU WALL REINF DETAIL

8 / S-701 SCALE: NTS

UNLESS OTHERWISE NOTED, LINEAR DIMENSIONS SHOWN ARE IN MILLIMETERS (mm)

APPROVED:

A/E DESIGNER OF RECORD

SEAL:

US ARMY CORPS OF ENGINEERS
AFGHANISTAN ENGINEER DISTRICT

Mark	Description	Date	Appr.	Mark	Description	Date	Appr.

Date: 2/23/10 | Rev: 0
Designed by: KMP/MMY | Dwn by: RC | Ckd by: CWW
Design file no. | Drawing code:
Reviewed by: LHM
Submitted by: BAKER
File name: AAMATCOS-701
Plot date: 6/4/2010
Plot scale: 8:X

U.S. ARMY CORPS OF ENGINEERS
AFGHANISTAN ENGINEER DISTRICT
APO AE 96338

Michael Baker Jr., Inc.
A unit of Michael Baker Corporation
Airside Business Park
100 Airport Drive
Moon Township, PA 15108
www.mbakercorp.com

STANDARD DESIGN
VARIOUS PROJECTS
VARIOUS LOCATIONS, AFGHANISTAN

ADMIN TRAINING COMPANY

TYPICAL DETAILS

Sheet reference number:
S-701

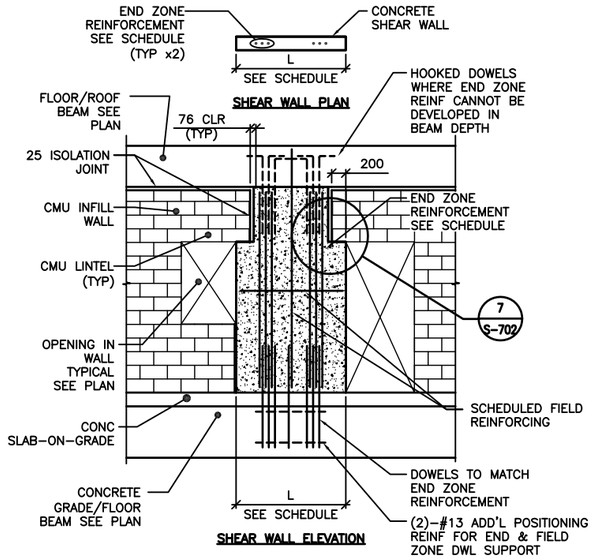

DETAIL NOTES:
1. FIELD REINFORCEMENT IN SHEAR WALL NOT SHOWN FOR CLARITY.
2. FIELD REINFORCEMENT CENTERED IN WALL.
3. MINIMUM CONC CLEAR DISTANCE FOR END ZONE REINF = 76
4. SEE CONC SHEAR WALL SCHEDULE ON SHEET S-601
5. SEE ARCH DWGS FOR JOINT INFORMATION

1 S-702 TYPE "A" SHEAR WALL DETAIL
SCALE: NTS

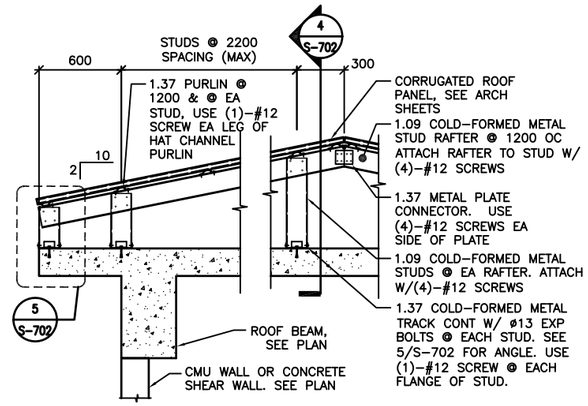

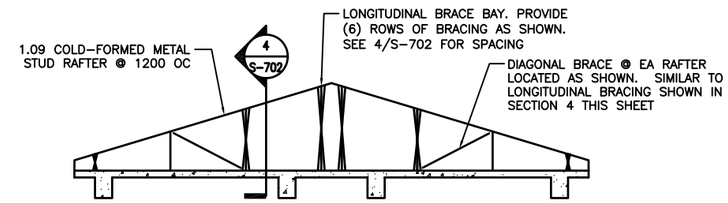

3 S-702 TYPICAL ROOF BRACE LAYOUT
SCALE: NTS

DETAIL NOTES:
1. ALL GABLE END VERTICAL STUDS SHALL BE ORIENTED 90° TO INTERIOR STUDS & SPACED @ 600 OC. GABLE END RAFTER SHALL BE 1.37 METAL TRACK SPANNING CONTINUOUSLY OVER GABLE END STUDS. INSET GIRTS AT GABLE END SHALL BE 1.09 COLD-FORMED METAL STUDS @ 1200 OC ATTACHED VIA 1.37 THICKNESS CLIP ANGLE W/ (2) #12 SCREWS EA LEG.
2. ALL INTERIOR, NON-GABLE END VERTICAL STUDS GREATER THAN 2400 IN LENGTH SHALL BE BACK-TO-BACK W/ #12 SCREWS @ 200 OC STAGGERED.

2 S-702 TYPICAL OVERBUILT ROOF FRAMING DETAIL
SCALE: NTS

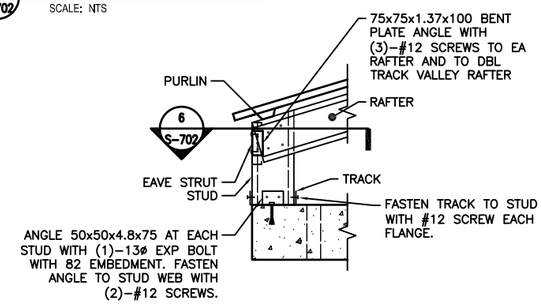

5 S-702 DETAIL
SCALE: NTS

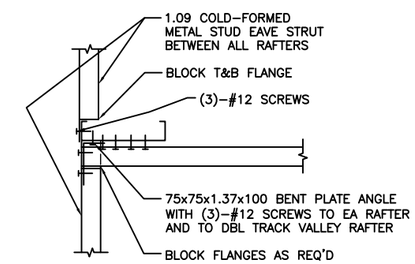

6 S-702 SECTION
SCALE: NTS

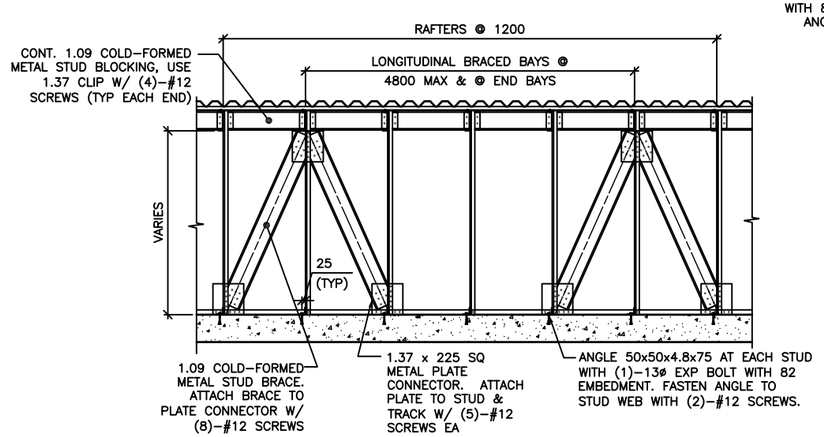

4 S-702 SECTION
SCALE: NTS

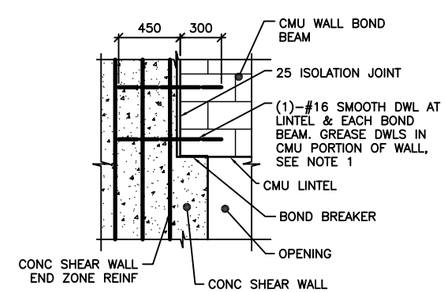

NOTE:
1. TIE SMOOTH DOWEL ROD TO SHEAR WALL END ZONE REINF FOR EACH BOND BEAM AND LINTEL.

7 S-702 SECTION
SCALE: NTS

UNLESS OTHERWISE NOTED, LINEAR DIMENSIONS SHOWN ARE IN MILLIMETERS (mm)

APPROVED:

A/E DESIGNER OF RECORD

SEAL:

US ARMY CORPS OF ENGINEERS
AFGHANISTAN ENGINEER DISTRICT

Mark	Description	Date	Appr.	Mark	Description	Date	Appr.

Designed by: KMP/MMY
Drawn by: RCC
Checked by: CWW
Reviewed by: LHM
Submitted by: BAKER
Date: 2/23/10
Rev: 0
Design file no.
Drawing code:
File name: AAAATC05-702
Plot date: 6/4/2010
Plot scale: 8x11

U.S. ARMY CORPS OF ENGINEERS
AFGHANISTAN ENGINEER DISTRICT
APO AE 96338

Michael Baker Jr., Inc.
A unit of Michael Baker Corporation
Airside Business Park
100 Airport Drive
Moon Township, PA 15108
www.mbakercorp.com

STANDARD DESIGN
VARIOUS PROJECTS
VARIOUS LOCATIONS, AFGHANISTAN

ADMIN TRAINING COMPANY

TYPICAL DETAILS

Sheet reference number:
S-702

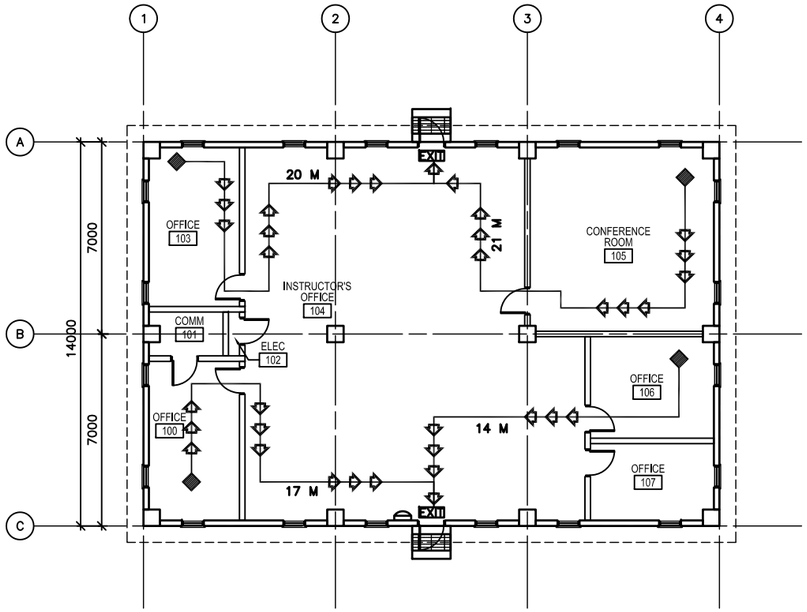

1 A-001 LIFE SAFETY PLAN

SCALE: 1:100

CODE ANALYSIS:

1. REFERENCES:
   2006 INTERNATIONAL BUILDING CODE (2006 IBC)
   2006 LIFE SAFETY CODE (2006 NFPA 101)

2. IBC OCCUPANCY CLASSIFICATION:
   GROUP B (BUSINESS NFPA 101 6.1.11 AND CHAPTER 38)

3. TYPE OF CONSTRUCTION (IBC): TYPE II–B (UNPROTECTED/NONSPRINKLERED)

4. IBC TABLE 503: ALLOWABLE HEIGHT AND BUILDING AREAS:
   GROUP B
   ALLOWABLE AREA: 2,137 SM
   ALLOWABLE HEIGHT: 3 STORIES (16 M)

   GROUP B
   PROPOSED AREA: 294 SM
   PROPOSED HEIGHT: 1 STORY (<16 M)

5. IBC TABLE 601 & 602: FIRE RESISTANCE RATING REQUIREMENTS FOR BUILDING ELEMENTS FOR TYPE II–B

BUILDING ELEMENT	RATING (HOUR)	REFERENCE
STRUCTURAL FRAME (COLUMNS, GIRDERS & TRUSSES)	0	TABLE 601
BEARING WALLS		
EXTERIOR	0	TABLE 601
INTERIOR	0	TABLE 601
NONBEARING WALLS & PARTITIONS		
INTERIOR	0	TABLE 601
FLOOR CONSTRUCTION	0	TABLE 601
ROOF CONSTRUCTION	0	TABLE 601
EXTERIOR WALL	0	TABLE 602

6. IBC TABLE 803.5 – INTERIOR WALL AND CEILING FINISH REQUIREMENTS FOR B OCCUPANCY/NONSPRINKLERED

GROUP	EXIT ENCLOSURES AND EXIT PASSAGEWAY	CORRIDORS	ROOMS AND ENCLOSED SPACES
B	A	B	C

7. NFPA 101 TABLE 7.3.1.2 – OCCUPANT LOAD
   BUSINESS = 9.3 SM/PERSON BUSINESS PROPOSED = 32 OCCUPANTS

8. NFPA 101 TABLE 7.3.3.1 – EGRESS CAPACITY
   BUSINESS = 5 MM PER OCCUPANT

   REQUIRED: 160 MM (32 OCCUPANTS x 5 MM PER OCCUPANT)
   PROPOSED EGRESS CAPACITY: 900 MM: (2) 900 MM DOORS

9. NFPA 101 PARAGRAPH 38.2.6.2 – EXIT ACCESS TRAVEL DISTANCE (NONSPRINKLERED)
   REQUIRED: 60 METERS
   PROPOSED: 23 METERS

10. NFPA 101 PARAGRAPH 38.3.6.1(1) & (2) – CORRIDORS
    NO RATED CORRIDOR REQUIRED (NONSPRINKLERED):
    (1) ALL EXITS ARE AVAILABLE FROM AN OPEN FLOOR AREA
    (2) SPACE IS OCCUPIED BY A SINGLE TENANT

11. NFPA 101 PARAGRAPH 38.2.4.1 – NUMBER OF EXITS
    BUSINESS REQUIRED: 1 MINIMUM
    BUSINESS PROPOSED: 2 EXITS

LEGEND:

- DENOTES PATHS OF EXIT TRAVEL
- EXIT — DENOTES DOOR AS AN EMERGENCY EXIT
- DENOTES STARTING POINT FOR TRAVEL DISTANCE
- DENOTES FIRE EXTINGUISHER LOCATIONS

LINEAR DIMENSIONS SHOWN ARE IN MILLIMETERS (MM), UNLESS OTHERWISE NOTED

0 2000 4000
SCALE: 1:100

APPROVED:

A/E DESIGNER OF RECORD

SEAL:

US ARMY CORPS OF ENGINEERS
AFGHANISTAN ENGINEER DISTRICT

Mark	Description	Date	Appr.	Mark	Description	Date	Appr.

Date: 2/23/10 Rev: 0
Design file no.
Drawing code:
File name: AAAATCOA-001
Plot date: 6/4/2010
Plot scale:

Designed by: KRC
Dwn by: KJG
Ckd by: NLJ
Reviewed by: LHM
Submitted by: BAKER

U.S. ARMY CORPS OF ENGINEERS
AFGHANISTAN ENGINEER DISTRICT
APO AE 96338

Michael Baker Jr., Inc.
A unit of Michael Baker Corporation
Airside Business Park
100 Airside Drive
Moon Township, PA 15108
www.mbakercorp.com

STANDARD DESIGN
VARIOUS PROJECTS
VARIOUS LOCATIONS, AFGHANISTAN

ADMIN TRAINING COMPANY

LIFE SAFETY PLAN

Sheet reference number:
A–001

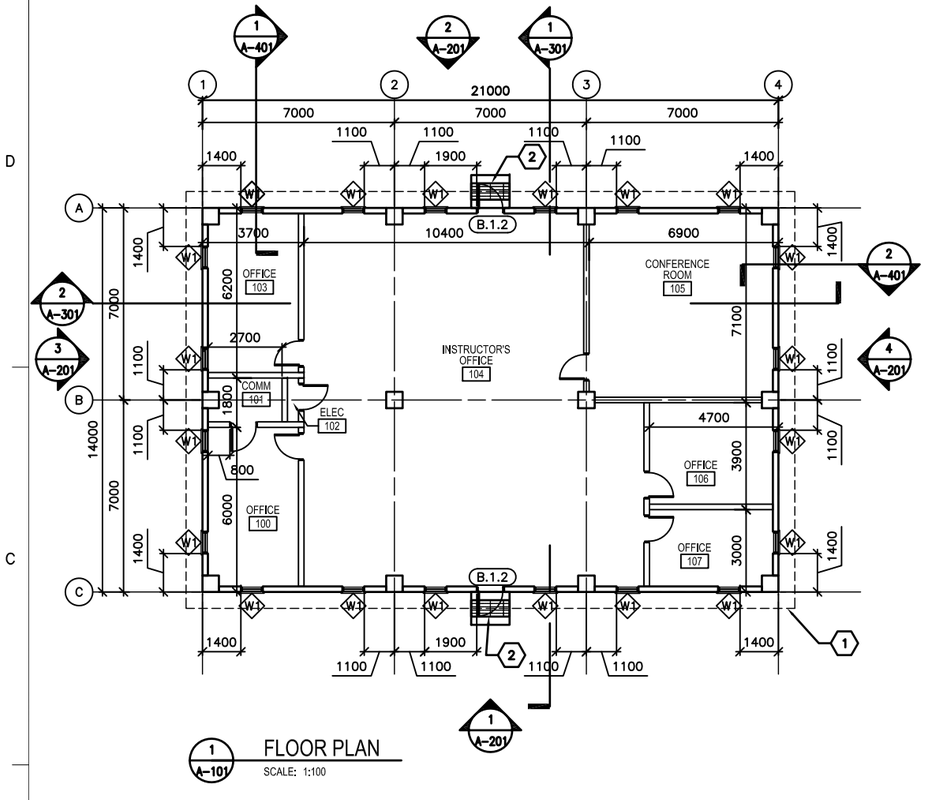

1 A-101 FLOOR PLAN

SCALE: 1:100

GENERAL NOTES:

A. DIMENSIONS ARE SHOWN TO OUTER EDGE OF EXTERIOR STRUCTURAL COLUMNS, STRUCTURAL COLUMN GRID, EDGE OF INTERIOR PARTITIONS, EDGE OF WINDOW OPENINGS, AND TO HINGE SIDE OF DOOR FRAME OPENINGS.

B. HINGE SIDE OF OPENINGS FOR DOORS AND FRAMES SHALL BE LOCATED 200 MM FROM THE ADJACENT WALL OR COLUMN, UNLESS NOTED OTHERWISE.

C. INTERIOR PARTITIONS SHALL BE 200 MM CMU. SEE STRUCTURAL DRAWINGS FOR LOCATION OF CONCRETE SHEAR WALLS.

D. COSMETIC REPAIR OF MINOR DEFECTS: REPAIR OR FILL MORTAR JOINTS AND MINOR DEFECTS, INCLUDING BUT NOT LIMITED TO SPALLS, IN ACCORDANCE WITH MANUFACTURER'S RECOMMENDATIONS AND PRIOR TO COATING APPLICATION. SURFACES TO BE PAINTED SHALL BE CLEAN AND FREE OF FOREIGN MATTER BEFORE APPLICATION OF PAINT. CLEANING SHALL BE SCHEDULED SO THAT DUST AND OTHER CONTAMINANTS WILL NOT FALL ON NEWLY PAINTED SURFACES.

E. INTERIOR CONCRETE, PLASTER AND MASONRY SURFACES SHALL BE ALLOWED TO CURE FOR AT LEAST 30 DAYS BEFORE PAINTING. CONCRETE SLABS–ON–GRADE SHALL BE ALLOWED TO CURE 90 DAYS BEFORE STAINING OR SEALING.

F. DO NOT USE PAINT MATERIALS CONTAINING LEAD CONTENT IN EXCESS OF 0.009 PERCENT OF THE WEIGHT OF THE TOTAL NONVOLATILE CONTENT OF THE PAINT OR THE WEIGHT OF THE DRIED PAINT FILM.

G. DO NOT USE ANY ASBESTOS CONTAINING MATERIALS (ACM) IN PROJECT. ACM IS DEFINED AS 1% OR MORE BY VOLUME.

H. DO NOT USE PAINT MATERIALS CONTAINING MERCURIAL FUNGICIDES.

I. FACTORY PRIMED METAL DOORS AND FRAMES SHALL RECEIVE TWO COATS OF PAINT.

J. FILL REMAINING SPACE AT PENETRATIONS IN FIRE–RATED FLOORS, PARTITIONS AND CEILINGS WITH APPROPRIATE FIRESTOPPING MATERIALS.

K. ALL CEILING FINISHES SHALL BE PAINTED PLASTER APPLIED TO STRUCTURE.

L. ALL WALL FINISHES SHALL BE PAINTED PLASTER APPLIED TO STRUCTURE.

M. ALL FLOOR FINISHES SHALL BE EPOXY SEALED CONCRETE.

N. ALL DOOR FRAME & HARDWARE TYPES SHALL BE A.1.5 UNLESS NOTED OTHERWISE.

KEY NOTES:

1. LINE OF ROOF OVERHANG ABOVE.
2. CONCRETE STOOP WITH GRATE – SEE DETAIL 1/A–503.

LEGEND:

XXX DOOR FRAME AND HARDWARE TYPE, SEE SHEET A–601

A WINDOW TYPE, SEE SHEET A–601

X KEY NOTE

ABBREVIATIONS:

ELEC	ELECTRICAL
MECH	MECHANICAL
JAN	JANITOR
CLOS	CLOSET
COMM	COMMUNICATIONS

LINEAR DIMENSIONS SHOWN ARE IN MILLIMETERS (MM), UNLESS OTHERWISE NOTED

0 2000 4000
SCALE: 1:100

APPROVED:

A/E DESIGNER OF RECORD

SEAL:

US ARMY CORPS OF ENGINEERS
AFGHANISTAN ENGINEER DISTRICT

Mark	Description	Date	Appr.	Mark	Description	Date	Appr.

Date: 2/23/10 | Rev: 0
Design file no.
Drawing code:
File name: AAAATC0A-101
Plot date: 6/4/2010
Plot scale:

Designed by: KRC | Dwn by: KJG | Ckd by: NLJ
Rev'd by: LHM | Submitted by: BAKER

U.S. ARMY CORPS OF ENGINEERS
AFGHANISTAN ENGINEER DISTRICT
APO AE 96338

Michael Baker Jr., Inc.
A unit of Michael Baker Corporation
Airside Business Park
100 Airside Drive
Moon Township, PA 15108
www.mbakercorp.com

STANDARD DESIGN
VARIOUS PROJECTS
VARIOUS LOCATIONS, AFGHANISTAN

ADMIN TRAINING COMPANY

FLOOR PLAN

Sheet reference number:
A–101

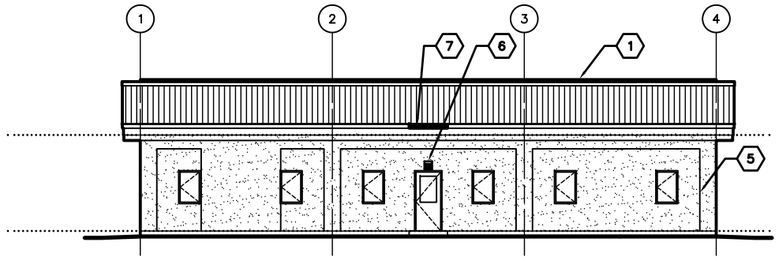

1 A-201 ELEVATION
SCALE: 1:100

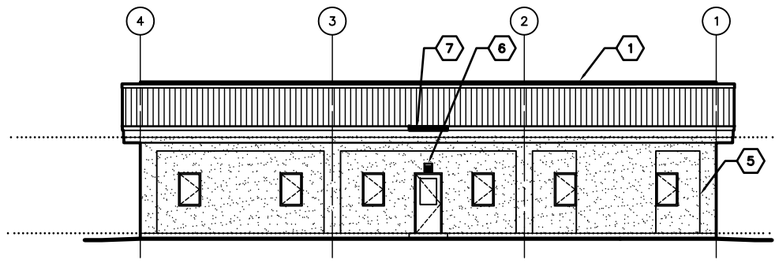

2 A-201 ELEVATION
SCALE: 1:100

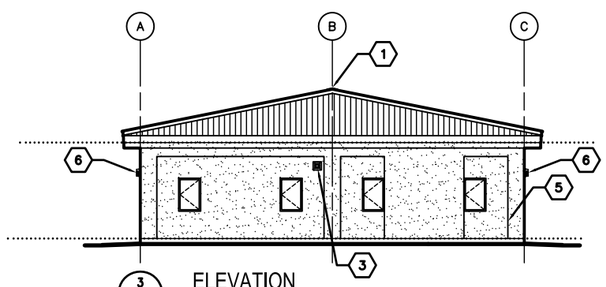

3 A-201 ELEVATION
SCALE: 1:100

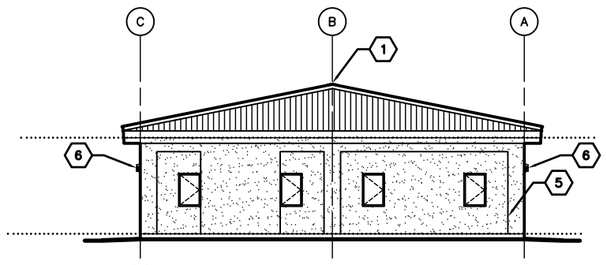

4 A-201 ELEVATION
SCALE: 1:100

GENERAL NOTES:

A. COORDINATE SIZE AND LOCATION OF OPENINGS FOR MECHANICAL ITEMS WITH MECHANICAL DRAWINGS.

B. PROVIDE STRUCTURAL LINTELS AS REQUIRED – SEE STRUCTURAL DRAWINGS.

C. ALL EXTERIOR WALL FINISHES SHALL BE STUCCO OVER CMU AND CONCRETE SUBSTRATES. PROVIDE CONTROL JOINTS IN STUCCO WALL FINISH AS NOTED.

D. ROOF SHALL BE CORRUGATED METAL ROOF PANELS ON COLD–FORMED METAL FRAMING ON CONCRETE SLAB.

KEY NOTES: (X)

1. CONTINUOUS METAL RIDGE VENT – SEE DETAIL 4/A–501.
2. NOT USED
3. EXHAUST FAN, LOCATE TOP OF WALL PENETRATION 2800 MM ABOVE FINISHED FLOOR – SEE MECHANICAL DRAWINGS.
4. NOT USED
5. STUCCO CONTROL JOINT – SEE DETAIL 2A/A–501.
6. EXTERIOR LIGHT – SEE ELECTRICAL.
7. METAL GUTTER, CENTER ON DOOR, 1400 MM – SEE DETAIL 1A/A–501.

LINEAR DIMENSIONS SHOWN ARE IN MILLIMETERS (MM), UNLESS OTHERWISE NOTED

0 2000 4000
SCALE: 1:100

APPROVED:

A/E DESIGNER OF RECORD

SEAL:

US ARMY CORPS OF ENGINEERS
AFGHANISTAN ENGINEER DISTRICT

Mark	Description	Date	Appr.	Mark	Description	Date	Appr.

Designed by: KRC
Dwn by: KJG
Ckd by: NLJ
Reviewed by: LHM
Submitted by: BAKER
Date: 2/23/10
Rev: 0
Design file no.
Drawing code:
File name: AA0A1TC0A-001
Plot date: 6/4/2010
Plot scale:

U.S. ARMY CORPS OF ENGINEERS
AFGHANISTAN ENGINEER DISTRICT
APO AE 96338

Michael Baker Jr., Inc.
A unit of Michael Baker Corporation
Airside Business Park
100 Airside Drive
Moon Township, PA 15108
www.mbakercorp.com

STANDARD DESIGN
VARIOUS PROJECTS
VARIOUS LOCATIONS, AFGHANISTAN

ADMIN TRAINING COMPANY

ELEVATIONS

Sheet reference number:
A–201

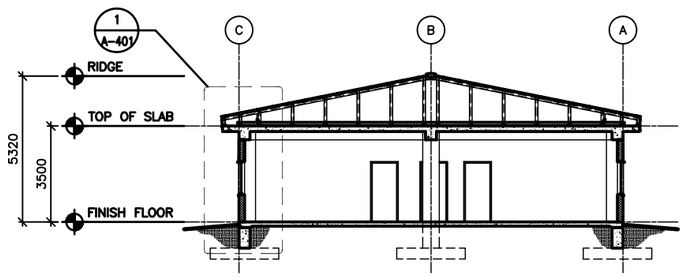

1 A-301 BUILDING SECTION
SCALE: 1:100

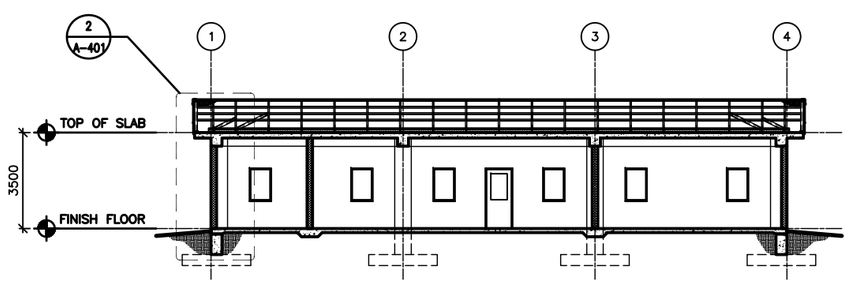

2 A-301 BUILDING SECTION
SCALE: 1:100

LINEAR DIMENSIONS SHOWN ARE IN MILLIMETERS (MM), UNLESS OTHERWISE NOTED

0 2000 4000
SCALE: 1:100

APPROVED:

A/E DESIGNER OF RECORD

SEAL:

US ARMY CORPS OF ENGINEERS
AFGHANISTAN ENGINEER DISTRICT

Mark	Description	Date	Appr.	Mark	Description	Date	Appr.

Designed by: KRC
Date by: 2/23/10
Rev: 0
Drawn by: KJG
Out by: NLJ
Design file no.
Drawing code:
Reviewed by: LHM
Submitted by:
File name: AAAATCOA-001
Plot date: 6/4/2010
Plot scale:

U.S. ARMY CORPS OF ENGINEERS
AFGHANISTAN ENGINEER DISTRICT
APO AE 96338

Michael Baker Jr., Inc.
A unit of Michael Baker Corporation
Airside Business Park
100 Airport Drive
Moon Township, PA 15108
www.mbakercorp.com

BAKER

STANDARD DESIGN
VARIOUS PROJECTS
VARIOUS LOCATIONS, AFGHANISTAN

ADMIN TRAINING COMPANY

BUILDING SECTIONS

Sheet reference number:
A-301

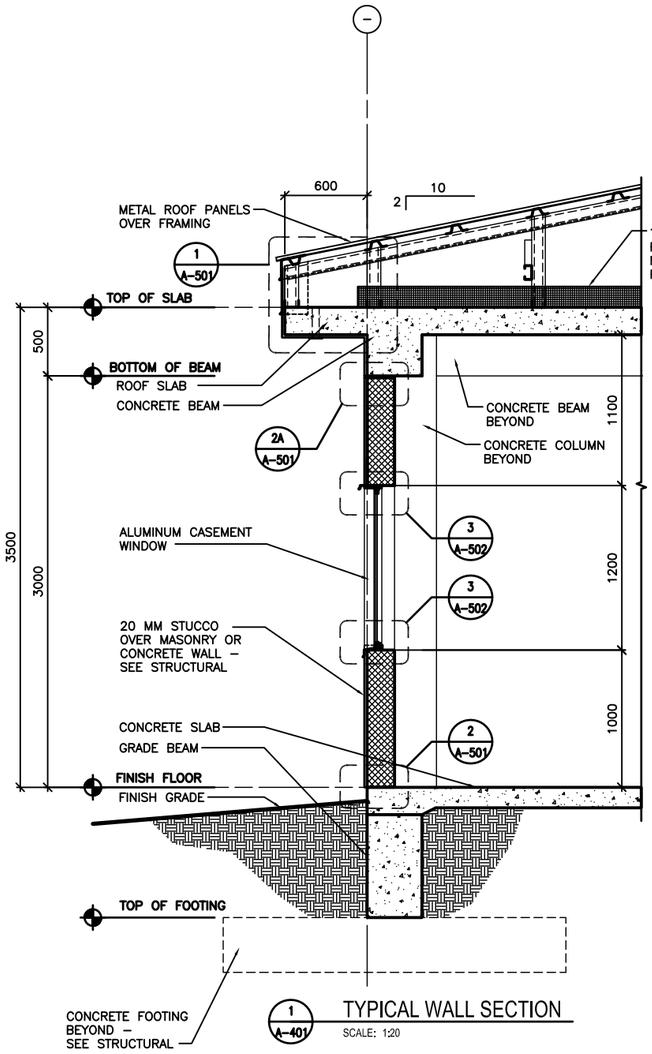

1 A-401 TYPICAL WALL SECTION

SCALE: 1:20

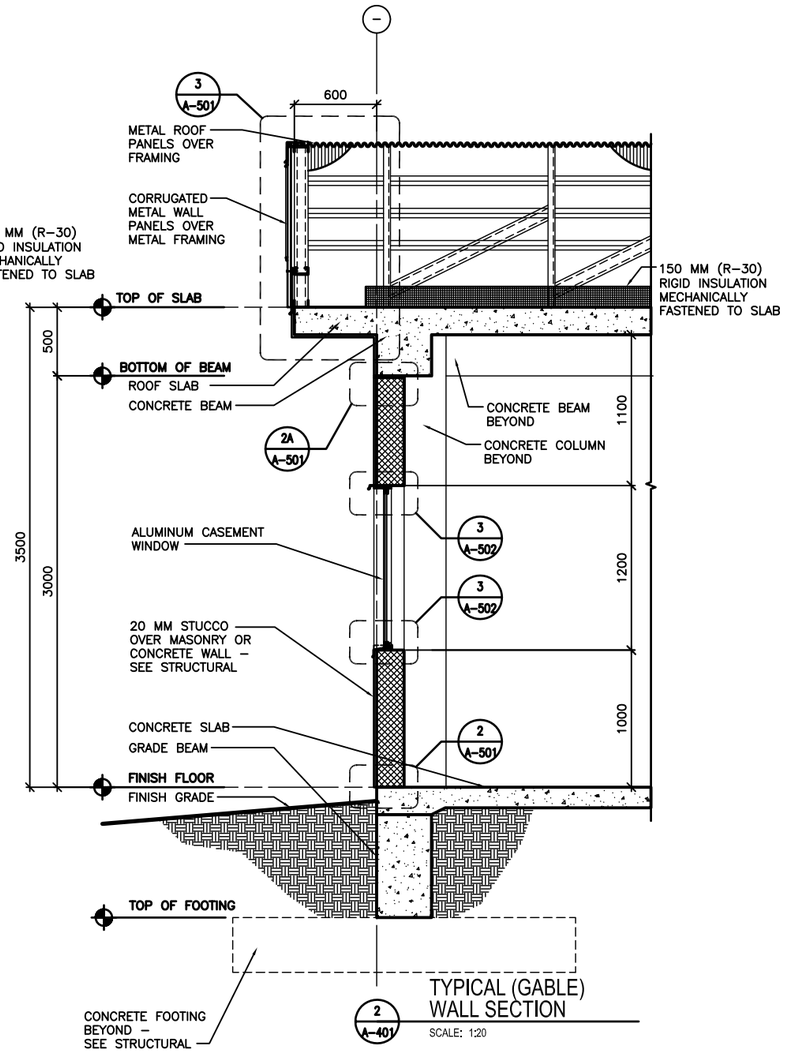

2 A-401 TYPICAL (GABLE) WALL SECTION

SCALE: 1:20

LINEAR DIMENSIONS SHOWN ARE IN MILLIMETERS (MM), UNLESS OTHERWISE NOTED

0 400 800

SCALE: 1:20

APPROVED:

A/E DESIGNER OF RECORD

SEAL:

US ARMY CORPS OF ENGINEERS
AFGHANISTAN ENGINEER DISTRICT

Mark	Description	Date	Appr.	Mark	Description	Date	Appr.

Designed by: KRC
Cad by: KJC
Reviewed by: LHM
Submitted by: BAKER
Date: 2/23/10
Rev: 0
Design file no.
Drawing code:
File name: AAAATCD4-001
Plot date: 6/4/2010
Plot scale:

U.S. ARMY CORPS OF ENGINEERS
AFGHANISTAN ENGINEER DISTRICT
APO AE 96338

Michael Baker Jr., Inc.
A unit of Michael Baker Corporation
Airside Business Park
100 Airside Drive
Moon Township, PA 15108
www.mbakercorp.com

STANDARD DESIGN
VARIOUS PROJECTS
VARIOUS LOCATIONS, AFGHANISTAN

ADMIN TRAINING COMPANY

WALL SECTIONS

Sheet reference number:
A–401

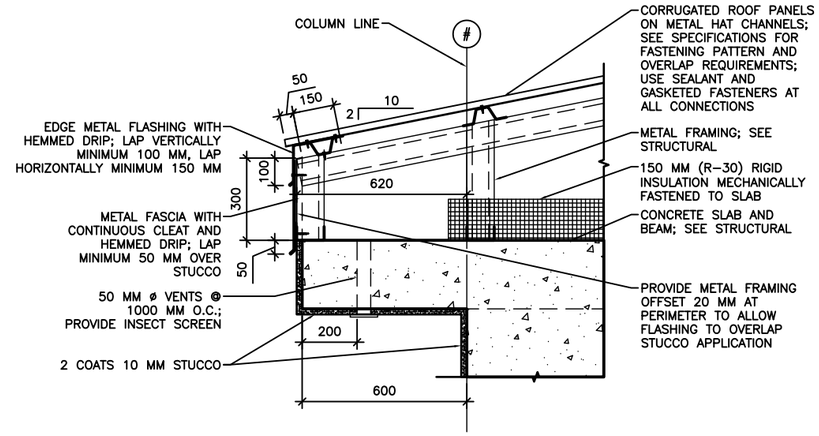

1 A–501 EAVE DETAIL
SCALE 1:10

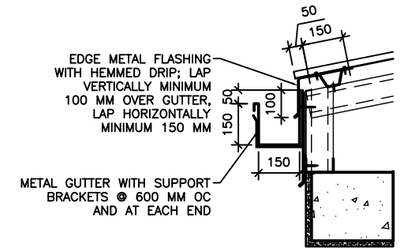

1A A–501 GUTTER DETAIL
SCALE 1:10

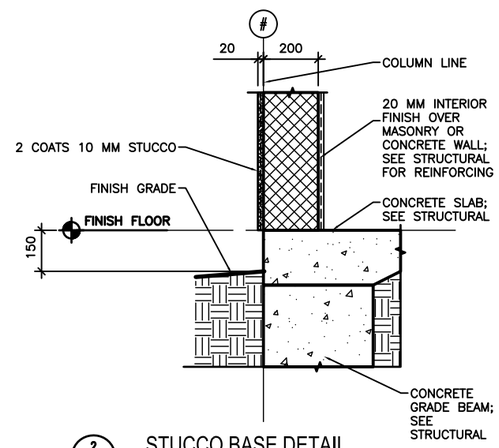

2 A–501 STUCCO BASE DETAIL
SCALE 1:10

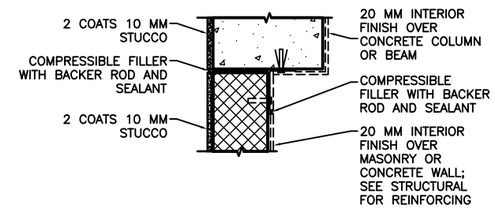

NOTE: DETAIL TYPICAL AT ALL WALL/COLUMN AND WALL/BEAM LOCATIONS, SEE ALTERNATE BRACING DETAIL BELOW 2B/A–501.

2A A–501 STUCCO JOINT DETAIL
SCALE 1:10

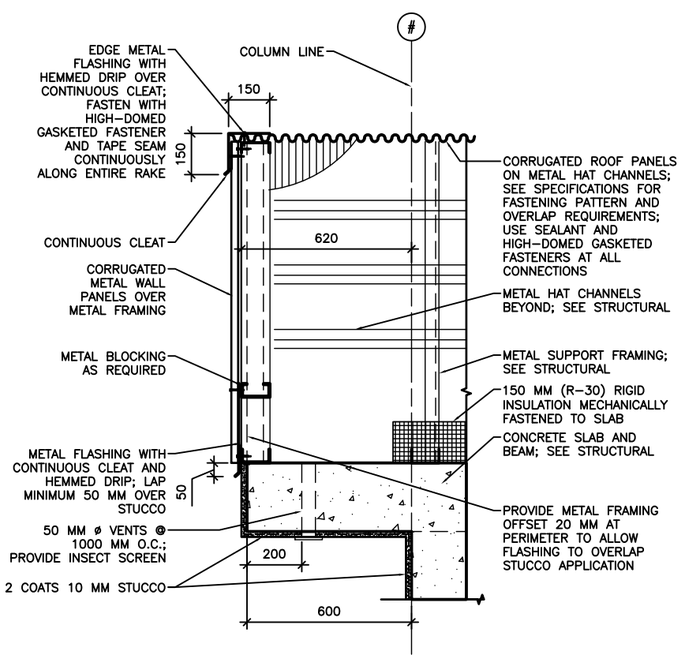

3 A–501 RAKE/EAVE DETAIL
SCALE 1:10

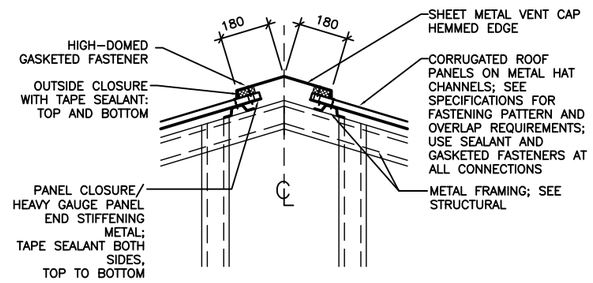

4 A–501 RIDGE VENT DETAIL
SCALE 1:10

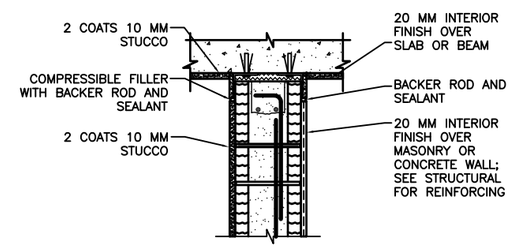

INTERIOR WALL/BEAM

2B A–501 ALTERNATE BRACING DETAIL
SCALE 1:10

LINEAR DIMENSIONS SHOWN ARE IN MILLIMETERS (MM), UNLESS OTHERWISE NOTED

0 200 400
SCALE: 1:10

APPROVED:

A/E DESIGNER OF RECORD

SEAL:

US ARMY CORPS OF ENGINEERS
AFGHANISTAN ENGINEER DISTRICT

Mark	Description	Date	Appr.	Mark	Description	Date	Appr.

Designed by: KRC
Date: 2/23/10
Rev: 0
Drawn by: KJC
Out by: NLJ
Design file no.
Drawing code:
Reviewed by: LHM
File name: AAAATCOA-001
Plot date: 6/4/2010
Plot scale:
Submitted by: BAKER

U.S. ARMY CORPS OF ENGINEERS
AFGHANISTAN ENGINEER DISTRICT
APO AE 96338

Michael Baker Jr., Inc.
A unit of Michael Baker Corporation
Airside Business Park
100 Airside Drive
Moon Township, PA 15108
www.mbakercorp.com

STANDARD DESIGN
VARIOUS PROJECTS
VARIOUS LOCATIONS, AFGHANISTAN

ADMIN TRAINING COMPANY

EXTERIOR DETAILS

Sheet reference number:
A–501

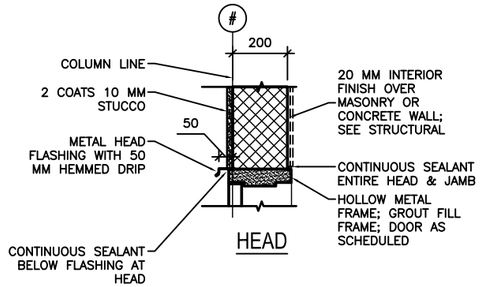

HEAD

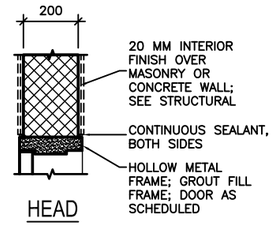

HEAD

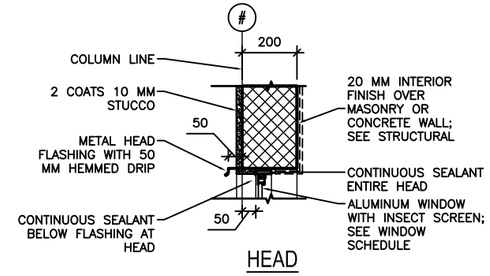

HEAD

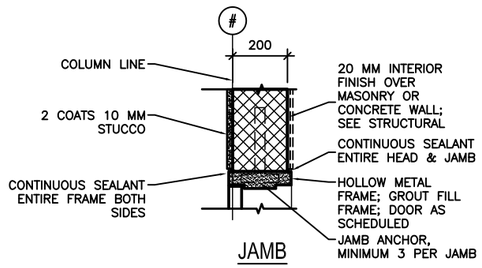

JAMB

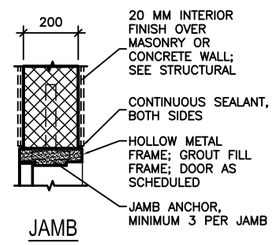

JAMB

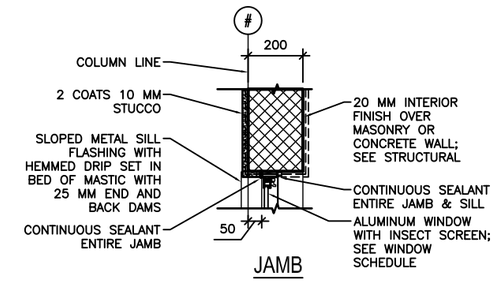

JAMB

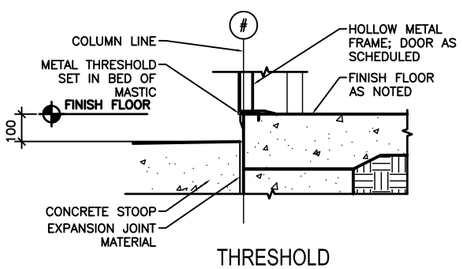

THRESHOLD

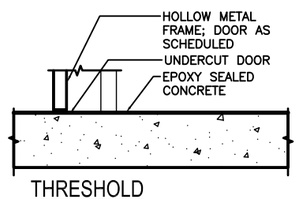

THRESHOLD

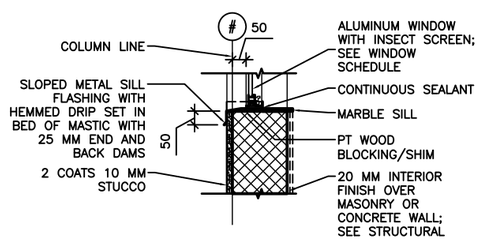

SILL

1 / A-502 EXTERIOR DOOR DETAILS

SCALE: 1:10

2 / A-502 INTERIOR DOOR DETAILS

SCALE: 1:10

3 / A-502 EXTERIOR WINDOW DETAILS

SCALE: 1:10

LINEAR DIMENSIONS SHOWN ARE IN MILLIMETERS (MM), UNLESS OTHERWISE NOTED

0 200 400
SCALE: 1:10

APPROVED:

A/E DESIGNER OF RECORD

SEAL:

US ARMY CORPS OF ENGINEERS
AFGHANISTAN ENGINEER DISTRICT

Mark	Description	Date	Appr.	Mark	Description	Date	Appr.

U.S. ARMY CORPS OF ENGINEERS
AFGHANISTAN ENGINEER DISTRICT
APO AE 96338

Michael Baker Jr., Inc.
A unit of Michael Baker Corporation

Airside Business Park
100 Airside Drive
Moon Township, PA 15108
www.mbakercorp.com

Designed by: KRC
Dwn by: KJG
Ckd by: NLJ
Reviewed by: LHM
Submitted by: BAKER
Date: 2/23/10
Design file no.
Drawing code:
File name: AA0A1TC0A-002
Plot date: 6/4/2010
Plot scale:
Rev: 0

STANDARD DESIGN
VARIOUS PROJECTS
VARIOUS LOCATIONS, AFGHANISTAN

ADMIN TRAINING COMPANY

HEAD, JAMB & SILL DETAILS

Sheet reference number:
A-502

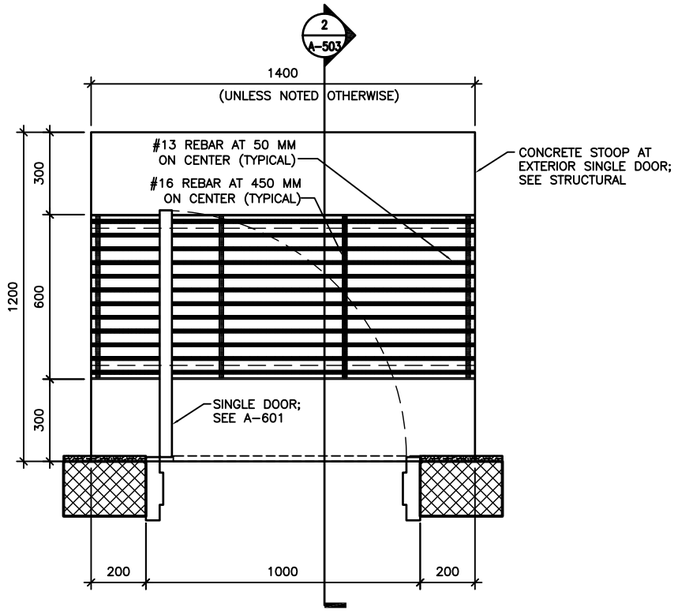

1 A-503 DOOR STOOP PLAN (WITH GRATE)

SCALE: 1:10

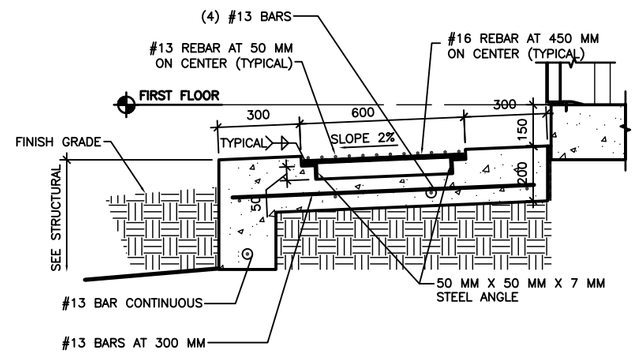

2 A-503 DOOR STOOP DETAIL

SCALE: 1:10

LINEAR DIMENSIONS SHOWN ARE IN MILLIMETERS (MM), UNLESS OTHERWISE NOTED

0 200 400

SCALE: 1:10

APPROVED:

A/E DESIGNER OF RECORD

SEAL:

US ARMY CORPS OF ENGINEERS
AFGHANISTAN ENGINEER DISTRICT

Mark	Description	Date	Appr.	Mark	Description	Date	Appr.

U.S. ARMY CORPS OF ENGINEERS
AFGHANISTAN ENGINEER DISTRICT
APO AE 96338

Michael Baker Jr., Inc.
A unit of Michael Baker Corporation
Airside Business Park
100 Airport Drive
Moon Township, PA 15108
www.mbakercorp.com

Designed by: KRC
Drawn by: KJG
Out by: NLJ
Reviewed by: LHM
Submitted by: BAKER
Date: 2/23/10
Rev: 0
Design file no.
Drawing code:
File name: AAAATCOA-003
Plot date: 6/4/2010
Plot scale:

STANDARD DESIGN
VARIOUS PROJECTS
VARIOUS LOCATIONS, AFGHANISTAN

ADMIN TRAINING COMPANY

STOOP DETAILS

Sheet reference number:
A-503

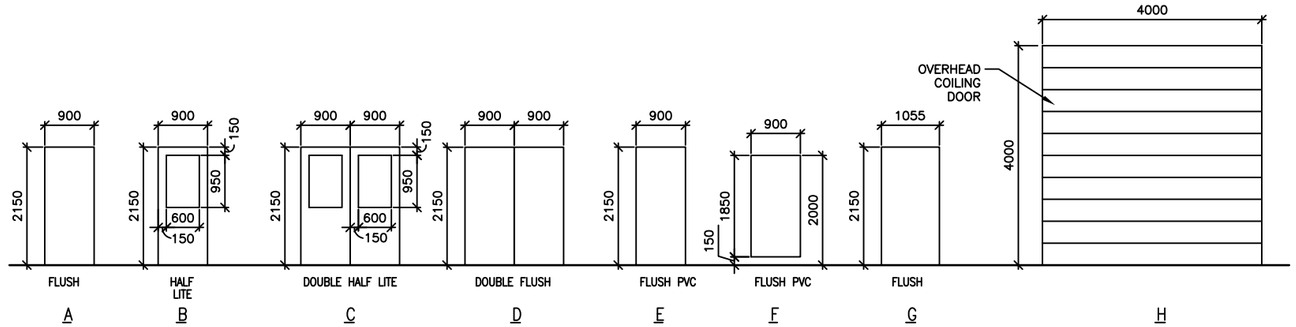

1 A-601 DOOR TYPES
SCALE: 1:50

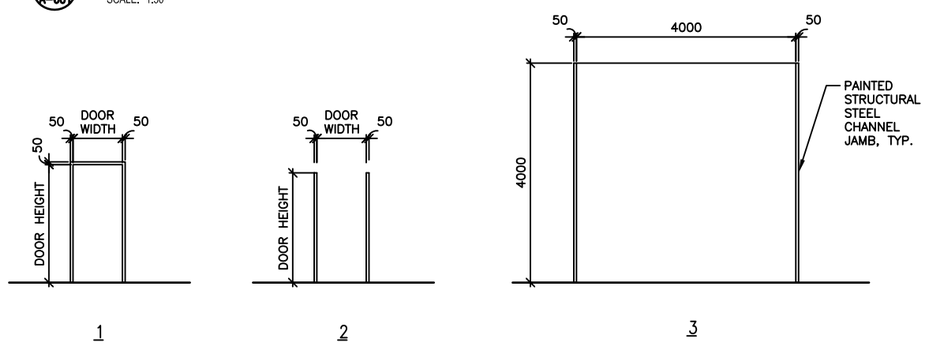

2 A-601 FRAME TYPES
SCALE: 1:50

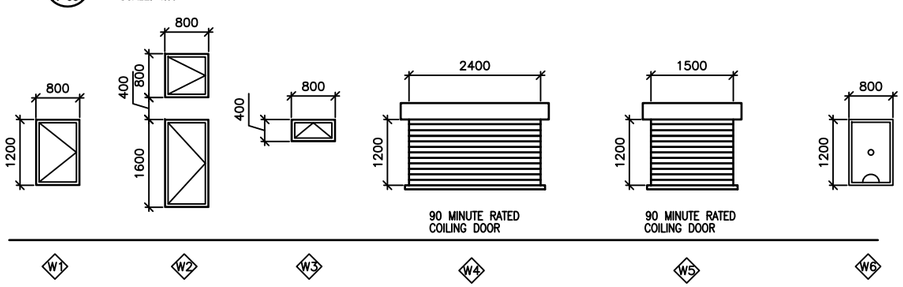

3 A-601 WINDOW TYPES
SCALE: 1:50

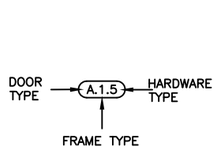

4 A-601 DOOR TAG
SCALE: NTS

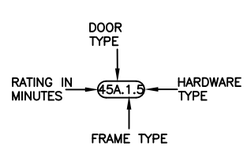

5 A-601 RATED DOOR TAG
SCALE: NTS

WINDOW TYPE NOTES:

1. ALL EXTERIOR WINDOWS SHALL BE ALUMINUM WITH INSECT SCREENS. WINDOWS SHALL BE COMMERCIAL GRADE.
2. ALL EXTERIOR WINDOWS SHALL BE OPERABLE.

DOOR TAG NOTES:

1. THE DOOR TAG INDICATES THE DOOR TYPE, FRAME TYPE AND HARDWARE SET FOR EACH DOOR.
2. THE DOOR TAG FOR RATED DOORS INCLUDES THE RATING OF THE DOOR IN MINUTES.

EXTERIOR DOOR HARDWARE TYPES:

HW-1
1-1/2 PR HINGES, A5112 114 X 114
1 EA RIM EXIT DEVICE, TYPE 1
1 EA CYLINDER. E09221A, GRADE 1
1 EA OVERHEAD CLOSER, C02061, LOW RESISTANCE
1 EA THRESHOLD, J32130
3 EA DOOR SILENCERS, L03011

HW-2
1-1/2 PR HINGES, A5112 114 X 114
1 EA LOCKSET, F13 ENTRY LOCK W/LEVER HANDLES, GRADE 1
1 EA OVERHEAD CLOSER, C02061, LOW RESISTANCE
1 EA THRESHOLD, J32130
3 EA DOOR SILENCERS, L03011

HW-3
3 PR HINGES, A5112 114 X 114
2 EA RIM EXIT DEVICE, TYPE 1
2 EA CYLINDER. GRADE 1
2 EA OVERHEAD CLOSER, C02061, LOW RESISTANCE
1 EA DOOR COORDINATOR, TYPE 21
1 EA ASTRAGAL
1 EA THRESHOLD, J32130
2 EA DOOR SILENCERS, L03011

HW-4
3 PR HINGES, A5112 114 X 114
1 EA LOCKSET W/LEVER HANDLES. GRADE 1, F13
1 EA OVERHEAD CLOSER, C02061, LOW RESISTANCE
2 EA MAGNETIC HOLDER PIN, ATTACHED TO DOOR LEAF
2 EA MAGNETIC HOLDER RECEIVER, ATTACHED TO STOOP
2 EA LEVER EXTENSION FLUSH BOLTS, L04081
1 EA ASTRAGAL
1 EA THRESHOLD, J32130
2 EA DOOR SILENCERS, L03011

DOOR AND HARDWARE NOTES:

1. INTERIOR AND EXTERIOR METAL DOORS AND FRAME COLORS SHALL MATCH ADJACENT WALL COLORS AS SELECTED BY THE CONTRACTING OFFICER.
2. FRAMES, EXCEPT FIRE-RATED FRAMES, SHALL BE MOUNTED AND ADJUSTED IN ACCORDANCE WITH MANUFACTURER'S INSTRUCTIONS. FRAMES SHALL BE FASTENED WITH MINIMUM OF THREE ANCHORS PER JAMB AT EQUAL INTERVALS.
3. DIMENSIONS SHOWN ON DOOR TYPES DETAIL ARE BASED UPON MODULAR MASONRY (OR ROUGH OPENING), HEIGHT OF 2200 MM FOR STANDARD PERSONNEL DOORS. CONTRACTOR SHALL COORDINATE WITH DOOR SUPPLIER TO ENSURE THAT DIMENSIONS OF DOORS AND FRAMES PROVIDED ARE COMPATIBLE WITH DOOR OPENING DIMENSIONS.
4. HARDWARE SHALL BE HEAVY DUTY, COMMERCIAL GRADE, STAINLESS STEEL WITH A SATIN OR BRUSHED FINISH.
5. HARDWARE TYPES INCLUDE BUILDERS HARDWARE MANUFACTURERS ASSOCIATION (BMHA) NUMBER.
6. DOORS IN 2 HOUR RATED PARTITIONS SHALL BE 1.5 HOUR (90 MINUTE) RATED DOORS IN ACCORDANCE WITH NFPA 101, TABLE 8.3.4.2.
7. DOORS AT STAIR ENCLOSURES SHALL BE 1 HOUR (60 MINUTE) RATED AT 1 HOUR WALL IN ACCORDANCE WITH NFPA 101, TABLE 8.3.4.2.
8. DOORS IN 1 HOUR RATED WALLS SHALL BE 3/4 HOUR (45 MINUTE) RATED DOORS IN ACCORDANCE WITH NFPA 101, TABLE 8.3.4.2.
9. DOORS IN 1 HOUR RATED CORRIDOR WALLS SHALL BE 1/3 HOUR (20 MINUTE) IN ACCORDANCE WITH NFPA 101, TABLE 8.3.4.2.
10. PROVIDE DOOR STOPS TO PROTECT WALLS ON LOCATIONS WHERE DOOR SWING WILL STRIKE WALL.

THIS SHEET IS STANDARD AND IS INCLUSIVE OF ALL THE DOOR/ WINDOW/ HARDWARE TYPES FOR THE ENTIRE RMTC CONTRACT. NOT ALL DOOR/ WINDOW/ HARDWARE TYPES ARE USED FOR ANY PARTICULAR BUILDING DESIGN. CONTRACTOR SHALL REFER TO THE FLOOR PLAN FOR THE TYPES BEING USED.

INTERIOR DOOR HARDWARE TYPES:

HW-5
1-1/2 PR HINGES, A8133 114 X 114
1 EA LOCKSET W/LEVER HANDLES, F08, GRADE 1
1 EA WALL STOP, L02101 OR L02161
3 EA DOOR SILENCERS, L03011

HW-6
1-1/2 PR HINGES, A8112 114 X 114
1 EA LOCKSET W/LEVER HANDLES, F08, GRADE 1
1 EA WALL STOP, L02101 OR L02161
1 EA OVERHEAD CLOSER, C02061, LOW RESISTANCE
3 EA DOOR SILENCERS, L03011

HW-7
1-1/2 PR HINGES, A8133
1 EA LOCKSET W/LEVER HANDLES, F13 GRADE 1
1 EA WALL STOP, L02101 OR L02161
2 EA MOP PLATE, J103
3 EA DOOR SILENCERS, L03011

HW-8
1-1/2 PR HINGES, A8112
1 EA LOCKSET W/LEVER HANDLES, F13 GRADE 1
1 EA WALL STOP, L02101 OR L02161
2 EA MOP PLATE, J103
1 EA OVERHEAD CLOSER, C02061, LOW RESISTANCE
3 EA DOOR SILENCERS, L03011

HW-9
1-1/2 PR HINGES, A5112 114 X 114
1 EA RIM EXIT DEVICE, TYPE 1
1 EA CYLINDER. E09221A, GRADE 1
1 EA OVERHEAD CLOSER, C02061, LOW RESISTANCE
3 EA DOOR SILENCERS, L03011

HW-10
3 PR HINGES, A5112 114 X 114
1 EA LOCKSET W/LEVER HANDLES. GRADE 1, F13
2 EA LEVER EXTENSION FLUSH BOLTS, L04081
1 EA ASTRAGAL
2 EA DOOR SILENCERS, L03011

HW-11
1-1/2 PR HINGES, A8112 114 X 114
1 EA LOCKSET W/LEVER HANDLES, F13, GRADE 1
1 EA WALL STOP, L02101 OR L02161
1 EA OVERHEAD CLOSER, C02061, LOW RESISTANCE
3 EA DOOR SILENCERS, L03011
1 EA ROBE HOOK

HW-12
1-1/2 PR HINGES, A8133
1 EA LATCHSET W/LEVER HANDLES, F76 GRADE 1
1 EA WALL STOP, L02101 OR L02161
2 EA MOP PLATE, J103
3 EA DOOR SILENCERS, L03011
1 EA ROBE HOOK

HW-13
3 PR HINGES, A5112 114 X 114
1 EA LOCKSET W/LEVER HANDLES. GRADE 1, F13
1 EA OVERHEAD CLOSER, C02061, LOW RESISTANCE
2 EA LEVER EXTENSION FLUSH BOLTS, L04081
1 EA ASTRAGAL
2 EA DOOR SILENCERS, L03011

HW-14
3 PR HINGES, A5112 114 X 114
2 EA RIM EXIT DEVICE, TYPE 1
2 EA CYLINDER. GRADE 1
2 EA OVERHEAD CLOSER, C02061, LOW RESISTANCE
1 EA DOOR COORDINATOR, TYPE 21
1 EA ASTRAGAL
2 EA DOOR SILENCERS, L03011

APPROVED:

A/E DESIGNER OF RECORD

SEAL:

US ARMY CORPS OF ENGINEERS
AFGHANISTAN ENGINEER DISTRICT

Mark	Description	Date	Appr.

Mark	Description	Date	Appr.

Designed by: KRC
Drawn by: KJG
Chkd by: NLJ
Reviewed by: LHM
Submitted by: BAKER
Date: 2/23/10
Rev: 0
Design file no.
Drawing code:
File name: AAAATCOA-001
Plot date: 6/4/2010
Plot scale:

U.S. ARMY CORPS OF ENGINEERS
AFGHANISTAN ENGINEER DISTRICT
APO AE 96338

Michael Baker Jr., Inc.
A unit of Michael Baker Corporation
Airside Business Park
100 Airport Drive
Moon Township, PA 15108
www.mbakercorp.com

STANDARD DESIGN
VARIOUS PROJECTS
VARIOUS LOCATIONS, AFGHANISTAN

ADMIN TRAINING COMPANY

WINDOW AND DOOR SCHEDULES

Sheet reference number:
A-601

POWER

- DISTRIBUTION PANELBOARD
- NEW PANELBOARD – SURFACE
- NEW PANELBOARD – RECESSED
- GENERATOR
- TRANSFORMER (DRAWN TO SIZE)
- JUNCTION BOX
- JUNCTION BOX – CEILING
- FUSIBLE SAFETY SWITCH
- MOTOR
- ^{M} MOTOR STARTING SWITCH – 220V, 20A RATED UNLESS OTHERWISE STATED
- ELECTRIC WATER HEATER
- CEILING FAN – REFER TO SPECIFICATION SECTION 26 20 00

RECEPTACLES

- DUPLEX 20A TYPE CEE 7/7 "SCHUKO STYLE" UNSWITCHED RECEPTACLE
- GF DUPLEX 20A TYPE CEE 7/7 "SCHUKO STYLE" UNSWITCHED RECEPTACLES – 10mA GROUND FAULT INTERRUPTER TYPE
- WP DUPLEX 20A TYPE CEE 7/7 "SCHUKO STYLE" UNSWITCHED TYPE WITH WEATHERPROOF COVER – 10mA GROUND FAULT INTERRUPTER TYPE
- EXP DUPLEX 20A TYPE CEE 7/7 "SCHUKO STYLE" UNSWITCHED RECEPTACLES – EXPLOSION PROOF
- * INDICATES MOUNT DEVICE ABOVE COUNTERTOP OR AT 1070mm ABOVE FINISHED FLOOR WHERE NO COUNTER IS TO BE INSTALLED.

LIGHTING

- LIGHTING FIXTURE – SEE FIXTURE SCHEDULE FOR MORE INFORMATION
- EMERGENCY LIGHTING FIXTURE – SEE FIXTURE SCHEDULE FOR MORE INFORMATION
- DOWNLIGHT
- LIGHTING FIXTURE ON NORMAL/EMERGENCY
- WALL MOUNTED LIGHT FIXTURE
- E EXIT SIGN – DIRECTIONAL ARROWS AS INDICATED ON DRAWINGS
- REMOTE HEAD FOR BATTERY PACK
- $ SINGLE POLE SWITCH – 20A RATED
- $^{3} 3-WAY SWITCH – 20A RATED
- $^{4} 4-WAY SWITCH – 20A RATED
- LC LIGHTING CONTACTOR
- POLE MOUNTED SITE LIGHTING FIXTURE– NUMBER OF FIXTURES PER POLE AS INDICATED ON DRAWINGS
- EXTERIOR DIRECTIONAL LIGHTING FIXTURE
- a SMALL CASE LETTERS REPRESENTS LAMP(S) / SWITCHES.

TELECOMMUNICATIONS

- ▼ TELEPHONE OUTLET(S) @ 45cm AFF. U.N.O. WITH 20mm RACEWAY TERMINATED TO TELEDATA TERMINAL BOARD.
- ▽ DATA OUTLET(S) @ 45cm AFF. U.N.O. WITH 20mm RACEWAY TERMINATED TO TELEDATA TERMINAL BOARD.

TELECOMMUNICATIONS (CONTINUED)

- COMBINATION TELEPHONE/DATA OUTLET(S) @ 45cm AFF. U.N.O. WITH 27mm RACEWAY TERMINATED TO TELEDATA TERMINAL BOARD.
- WALL MTD. TELEPHONE OUTLET WITH 20mm RACEWAY TO TELEDATA TERMINAL BOARD.
- (x)T INDICATES NUMBER OF TELEPHONE OUTLET(S) AND ASSOCIATED CABLING
- (x)D INDICATES NUMBER OF DATA OUTLET(S) AND ASSOCIATED CABLING
- (x)TF INDICATES NUMBER OF TELEPHONE OUTLETS AND ASSOCIATED CABLING WITH 1 OUTLET AND CABLE DEDICATED FOR FAX

SINGLE LINE SYMBOLS

- SWITCH
- BREAKER
- FUSE
- TRANSFORMER
- GROUND
- CONTACT (NORMALLY OPEN)
- CONTACT (NORMALLY CLOSED)
- TRANSFER SWITCH
- CURRENT TRANSFORMER
- INDICATES NEW ELECTRICAL EQUIPMENT
- C INDICATES NEW CONTROL WIRING AND CONDUIT
- EQUIPMENT OUTLINE

MISCELLANEOUS

- BRANCH CIRCUIT WIRING, SURFACE MOUNTED ON WALLS
- BRANCH CIRCUIT WIRING – 6mm²
- BRANCH CIRCUIT WIRING – UNDER FLOOR
- HOME RUN BACK TO PANEL
- CONDUIT TURNED DOWN
- CONDUIT TURNED UP
- LV LOW VOLTAGE WIRING AND CONDUIT
- ~ INDICATES CONTINUATION OF LINE

FIRE ALARM

- FACP FIRE ALARM CONTROL PANEL WITH BATTERY BACKUP
- F FIRE ALARM PULL STATION

FIRE ALARM (CONTINUED)

- F FIRE ALARM STROBE – WALL MOUNTED
- F FIRE ALARM AUDIBLE/STROBE – WALL MOUNTED
- F FIRE ALARM HORN/STROBE – WALL MOUNTED
- S SMOKE DETECTOR
- H HEAT DETECTOR CEILING MOUNTED
- D DUCT DETECTOR – PROVIDED BY EC, INSTALLED BY MC AND CONNECTED BY EC

DENOTATIONS & ABBREVIATIONS

AFF	ABOVE FINISHED FLOOR
C	CEILING MOUNTED
E	EMERGENCY
EC	ELECTRICAL CONTRACTOR
EPO	EMERGENCY POWER OFF
EXP	EXPLOSION PROOF
F	FIRE ALARM
FF	FLUSH FLOOR MOUNTED
FL	FLUORESCENT
FO	FIBER OPTIC
FSS	FUSED SAFETY SWITCH
GF	GROUND FAULT INTERRUPTER
GC	GENERAL CONTRACTOR
IG	ISOLATED GROUND
K	KEY
LV	LOW VOLTAGE
M	MOTOR
MC	MECHANICAL CONTRACTOR
NE	NORMAL/EMERGENCY
NFSS	NON-FUSED SAFETY SWITCH
PA	PAGING SYSTEM
PLC	PLUMBING CONTRACTOR
SL	SINGLE LINE
T	TELEPHONE

DENOTATIONS & ABBREVIATIONS (CONT.)

TP	TAMPER PROOF
UE	UNDERGROUND ELECTRIC
W	WALL MOUNTED
WP	WEATHERPROOF WITH GROUND FAULT INTERRUPTION
WT	WATER TIGHT

GENERAL PROJECT NOTES:

G1. UNLESS OTHERWISE NOTED, PROVIDE ALL EQUIPMENT SHOWN ON THE PLANS. THE ELECTRICAL CONTRACTOR SHALL COORDINATE ALL SYMBOLS SHOWN ON THE PLANS WITH THE SYMBOL LIST. IT SHALL BE THE RESPONSIBILITY OF THE CONTRACTOR TO VERIFY THE INTENT OF ANY SYMBOL THAT IS SHOWN ON THE PLANS AND NOT INDICATED ON THE SYMBOL LIST WITH THE ENGINEER PRIOR TO BID.

G2. THE CONTRACTOR SHALL VERIFY THE LOCATION OF ALL UNDERGROUND UTILITIES WITHIN THE CONSTRUCTION AREA THREE (3) WORKING DAYS NOTICE BEFORE COMMENCING DIGGING. NOTIFY THE LOCAL AUTHORITY HAVING JURISDICTION AND WAIT THE REQUIRED TIME BEFORE COMMENCING TO DIG.

G3. THE CONTRACTOR SHALL COORDINATE CONDUIT RUNS, LIGHTING FIXTURES AND OTHER EQUIPMENT LOCATIONS WITH THE OTHER TRADE CONTRACTORS TO AVOID CONFLICTS.

G4. WHERE VOLTAGES AND FREQUENCIES ON THE DRAWINGS AND IN THE SPECIFICATIONS DIFFER FROM THE LOCAL ONES, ALL WORK SHALL BE PERFORMED USING THE LOCAL VOLTAGES AND FREQUENCIES.

G5. THE MINIMUM WIRE SIZE ON THE PROJECT SHALL BE 4mm². THE MINIMUM CONDUIT SIZE SHALL BE 20mm. THE MINIMUM BREAKER SIZE SHALL BE 20 AMPS.

G6. THE CONTRACTOR SHALL PUT A MAXIMUM OF 6 DUPLEX RECEPTACLES ON A 20A SINGLE POLE CIRCUIT.

G7. WHERE THE 1010 SCOPE REVIEW, 1015 TECHNICAL REVIEW, DRAWINGS, AND SPECIFICATIONS DIFFER FROM AMERICAN CODES OR STANDARDS, THE 1010, 1015, DRAWINGS, AND SPECIFICATIONS SHALL RULE.

G8. ALL CONDUIT AND DEVICES SHALL BE SURFACE MOUNTED UNLESS OTHERWISE INDICATED.

G9. CONTRACTOR SHALL COORDINATE ALL WORK WITH ALL OTHER TRADES TO ENSURE ALL WORK IS COMPLETED IN A PROFESSIONAL, WORKMAN-LIKE MANNER.

APPROVED:

A/E DESIGNER OF RECORD

SEAL:

US ARMY CORPS OF ENGINEERS
AFGHANISTAN ENGINEER DISTRICT

Mark	Description	Date	Appr.	Mark	Description	Date	Appr.

Rev: 0
Date: 2/23/10
Design file no.
Drawing code:
File name:
Plot date:
Plot scale:

Designed by: BHB
Dwn by: BHB
Ckd by: JRG
Reviewed by: JRG
Submitted by: BAKER

U.S. ARMY CORPS OF ENGINEERS
AFGHANISTAN ENGINEER DISTRICT
APO AE 96338

Michael Baker Jr., Inc.
A unit of Michael Baker Corporation
Airside Business Park
100 Airside Drive
Moon Township, PA 15108
www.mbakercorp.com

STANDARD DESIGN
VARIOUS PROJECTS
VARIOUS LOCATIONS, AFGHANISTAN

ADMIN TRAINING COMPANY
ELECTRICAL SYMBOLS & ABBREVIATIONS

Sheet reference number:
E-001

GENERAL NOTES:

1. REFER TO DRAWING #E-001 FOR THE ELECTRICAL SYMBOLS LIST.
2. EXIT SIGNS SHALL BE WIRED AHEAD OF ANY LOCAL SWITCHING ON CIRCUITS. SEE WIRING DIAGRAM DETAIL 5, DRAWING #E-501.
3. REFER TO DRAWING #E-601 FOR THE LIGHTING FIXTURE SCHEDULE.
4. REFER TO DRAWING #E-501 FOR THE POWER RISER.
5. REFER TO DRAWING #E-601 FOR PANEL SCHEDULES.
6. LIGHT FIXTURES INDICATED AS EMERGENCY SHALL BE PROVIDED WITH A BATTERY BACKUP BALLAST. SEE WIRING DIAGRAM DETAIL 6, DRAWING #E-501.

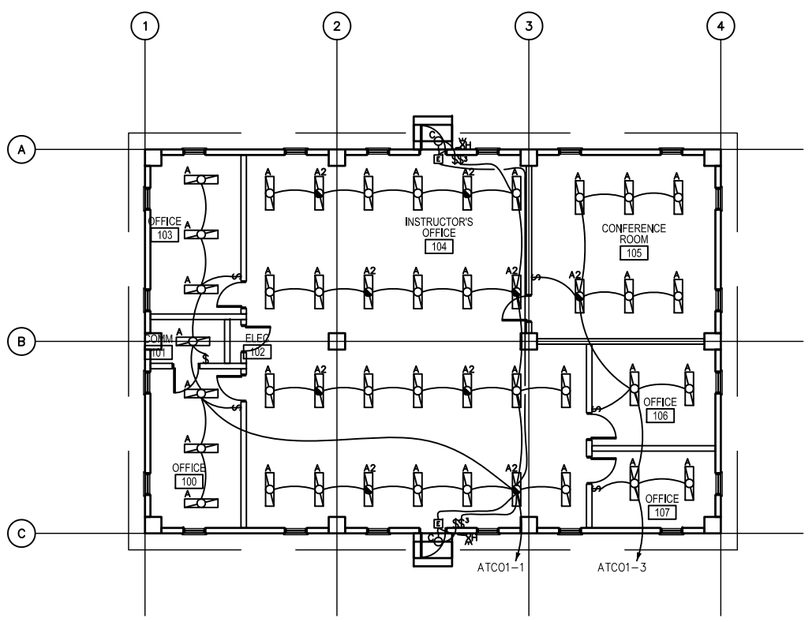

1
E-101

ADMIN TRAINING COMPANY
LIGHTING PLAN

SCALE: 1:50

0 2000 4000
SCALE: 1:100

APPROVED:

A/E DESIGNER OF RECORD

SEAL:

US ARMY CORPS OF ENGINEERS
AFGHANISTAN ENGINEER DISTRICT

Mark	Description	Date	Appr.

Mark	Description	Date	Appr.

Designed by: JRG
Drn by: BJB
Ckd by: JRG
Reviewed by: JRG
Submitted by: BAKER
Date: 2/23/10
Design file no.
Drawing code:
File name:
Plot date:
Plot scale:
Rev: 0

U.S. ARMY CORPS OF ENGINEERS
AFGHANISTAN ENGINEER DISTRICT
APO AE 96338

Michael Baker Jr., Inc.
A unit of Michael Baker Corporation
Airside Business Park
100 Airside Drive
Moon Township, PA 15108
www.mbakercorp.com

STANDARD DESIGN
VARIOUS PROJECTS
VARIOUS LOCATIONS, AFGHANISTAN

ADMIN TRAINING COMPANY
ELECTRICAL LIGHTING PLAN

Sheet reference number:
E-101

GENERAL NOTES:

1. REFER TO DRAWING #E-001 FOR THE ELECTRICAL SYMBOLS LIST.
2. REFER TO DRAWING #E-501 FOR THE POWER RISER.
3. REFER TO DRAWING #E-601 FOR PANEL SCHEDULES.
4. COORDINATE EXACT MOUNTING LOCATION OF DISCONNECTING MEANS FOR MECHANICAL AND PLUMBING EQUIPMENT IN THE FIELD.
5. FUSIBLE SAFETY SWITCHES THAT ARE NOT OTHERWISE IDENTIFIED SHALL BE 380V, 1P, 30A FUSED SAFETY SWITCHES WITH 20A FUSES.

NUMBERED NOTES:

1. PANEL ATC01.
2. PROVIDE A 1200mm X 2400mm SHEET OF PLYWOOD PAINTED WITH FIRE RESISTANT PAINT FOR MOUNTING TELECOMMUNICATIONS EQUIPMENT.
3. PROVIDE CONDUIT STUB UP IN THE ROOM FOR INCOMING TELECOMMUNICATIONS SERVICES FROM THE CENTRAL COMMUNICATIONS SYSTEM IN THE GARRISON.
4. PROVIDE POWER CONNECTION TO EXHAUST FANS. SEE DRAWINGS #M-101 AND #E-601 FOR MORE INFORMATION.
5. PROVIDE POWER CONNECTION TO ELECTRIC UNIT HEATER #2. SEE DRAWINGS #M-101 AND #E-601 FOR MORE INFORMATION.
6. PROVIDE POWER CONNECTION TO ELECTRIC UNIT HEATER #4. SEE DRAWINGS #M-101 AND #E-601 FOR MORE INFORMATION.

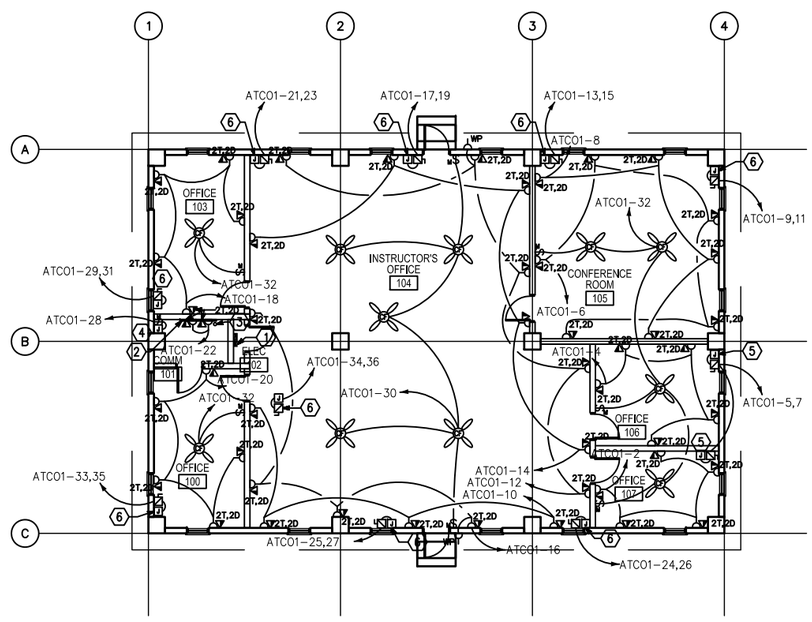

1
E-102

ADMIN TRAINING COMPANY POWER AND SYSTEMS PLAN

SCALE: 1:100

0 2000 4000
SCALE: 1:100

APPROVED:

A/E DESIGNER OF RECORD

SEAL:

US ARMY CORPS OF ENGINEERS
AFGHANISTAN ENGINEER DISTRICT

Mark	Description	Date	Appr.	Mark	Description	Date	Appr.

Designed by: JRG
Drawn by: BJB
Date: 2/23/10
Rev: 0
Checked by: JRG
Design file no.
Drawing code:
Reviewed by: JRG
Submitted by: BAKER
File name:
Plot date:
Plot scale:

U.S. ARMY CORPS OF ENGINEERS
AFGHANISTAN ENGINEER DISTRICT
APO AE 96338

Michael Baker Jr., Inc.
A unit of Michael Baker Corporation
Airside Business Park
100 Airside Drive
Moon Township, PA 15108
www.mbakercorp.com

STANDARD DESIGN
VARIOUS PROJECTS
VARIOUS LOCATIONS, AFGHANISTAN

ADMIN TRAINING COMPANY
ELECTRICAL POWER AND SYSTEMS PLAN

Sheet reference number:
E-102

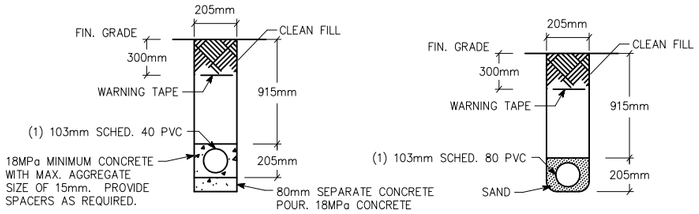

NOTE: PVC CONDUIT SHALL BE DIRECT BURIED SCHEDULE 80 FOR NO TRAFFIC AREAS AND CONCRETE-ENCASED SCHEDULE 40 FOR UNDER ROADWAYS OR TRAFFIC AREAS.

1 / E-501 TYPICAL DUCT BANK DETAILS FOR CONDUIT IN SAND OR CONCRETE

SCALE: N.T.S.

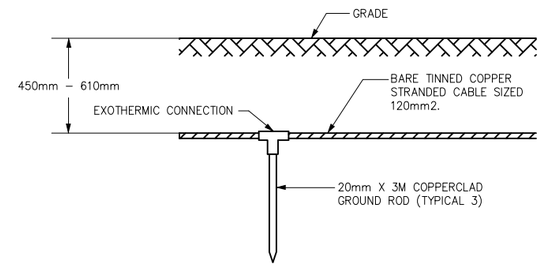

2 / E-501 GROUND TRIPOD SYSTEM DETAIL - ELEVATION

SCALE: N.T.S.

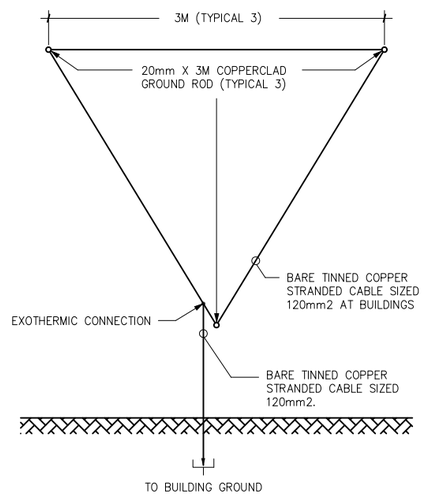

3 / E-501 GROUND TRIPOD SYSTEM DETAIL - PLAN

SCALE: N.T.S.

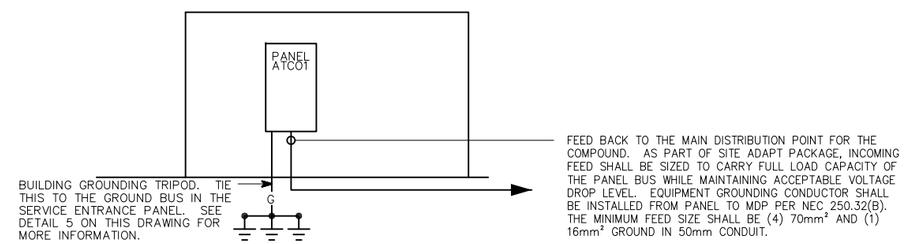

4 / E-501 ATCO RISER DIAGRAM

SCALE: N.T.S.

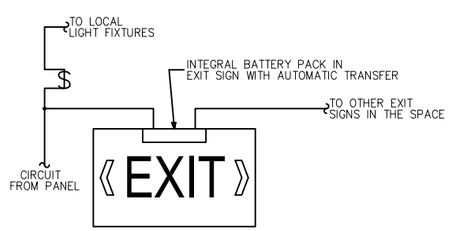

5 / E-501 EXIT SIGN WIRING DIAGRAM

SCALE: N.T.S.

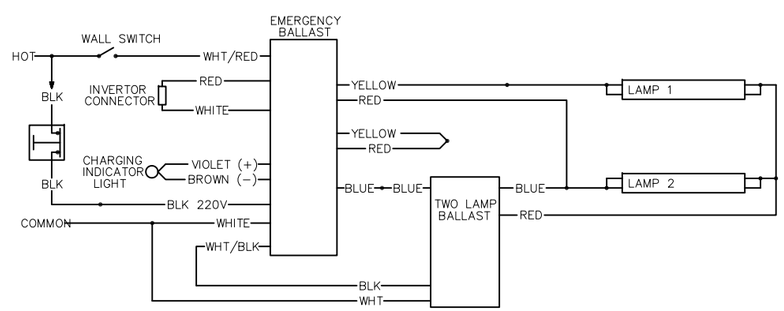

6 / E-501 EMERGENCY FIXTURE WIRING DIAGRAM

SCALE: N.T.S.

US ARMY CORPS OF ENGINEERS
AFGHANISTAN ENGINEER DISTRICT

Mark	Description	Date	Appr.	Mark	Description	Date	Appr.

Designed by: JRG
Dwn by: BJB
Ckd by: JRG
Reviewed by: JRG
Submitted by: BAKER
Date: 2/23/10
Rev: 0
Design file no.
Drawing code:
File name:
Plot date:
Plot scale:

U.S. ARMY CORPS OF ENGINEERS
AFGHANISTAN ENGINEER DISTRICT
APO AE 96338

Michael Baker Jr., Inc.
A unit of Michael Baker Corporation
Airside Business Park
100 Airside Drive
Moon Township, PA 15108
www.mbakercorp.com

STANDARD DESIGN
VARIOUS PROJECTS
VARIOUS LOCATIONS, AFGHANISTAN

ADMIN TRAINING COMPANY
ELECTRICAL DETAILS

APPROVED:

A/E DESIGNER OF RECORD

SEAL:

Sheet reference number:
E-501

(A) LARGER OF THE TWO SIZES GIVEN IN THE TABLES BELOW	
GROUNDING ELECTRODE CONDUCTOR (BASED ON AIC RATING)	
AIC RATING OF SERVICE EQUIPMENT	NECESSARY GROUNDING ELECTRODE CONDUCTOR SIZE
10K	(1) 35mm²
14K	(1) 50mm²
18K	(1) 70mm²
22K	(1) 70mm²
25K	(1) 70mm²
30K	(1) 95mm²
35K	(1) 120mm²
42K	(1) 150mm²
65K	(1) 185mm²
100K	(1) 300mm²
125K	(2) 185mm²
200K	(2) 300mm²
GROUNDING ELECTRODE CONDUCTOR (BASED ON NEC TABLE 250.66)	
SIZE OF LARGEST UNGROUNDED SERVICE CONDUCTOR OR EQUIVALENT AREA FOR PARALLEL CONDUCTORS	NECESSARY GROUNDING ELECTRODE CONDUCTOR SIZE
350 kcmil OR SMALLER	35mm²
OVER 350 kcmil TO 600 kcmil	70mm²
OVER 600 kcmil TO 1100 kcmil	70mm²
OVER 1100 kcmil	95mm²
NOTE: ALL SIZES ARE BASED ON COPPER CONDUCTORS.	

(B) EQUIPMENT GROUNDING CONDUCTOR	
RATING OR SETTING OF AUTOMATIC OVERCURRENT DEVICE IN CIRCUIT AHEAD OF EQUIPMENT, CONDUIT, ETC. NOT EXCEEDING (AMPERES)	NECESSARY EQUIPMENT GROUNDING CONDUCTOR SIZE
15	2.5mm²
20	4.0mm²
30	6.0mm²
40	6.0mm²
60	6.0mm²
100	10mm²
200	16mm²
300	25mm²
400	25mm²
500	35mm²
600	50mm²
800	70mm²
1000	70mm²
1200	95mm²
1600	120mm²
2000	150mm²
2500	185mm²
3000	240mm²
4000	300mm²
5000	400mm²
6000	400mm²
NOTE: ALL SIZES ARE BASED ON COPPER CONDUCTORS.	

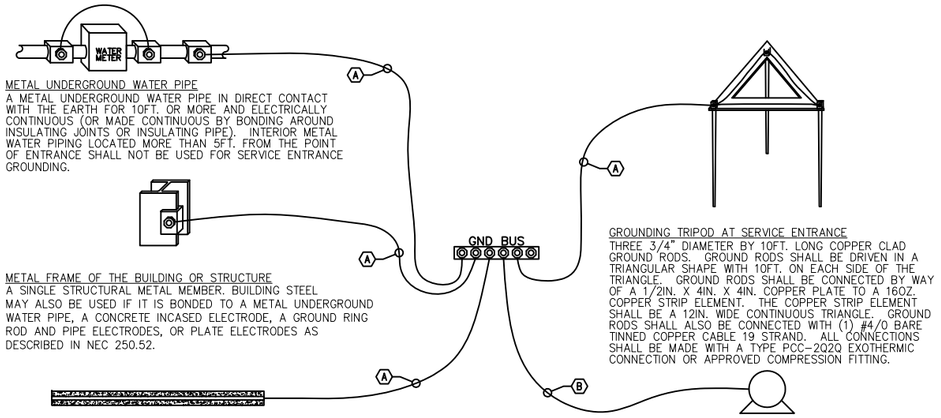

METAL UNDERGROUND WATER PIPE
A METAL UNDERGROUND WATER PIPE IN DIRECT CONTACT WITH THE EARTH FOR 10FT. OR MORE AND ELECTRICALLY CONTINUOUS (OR MADE CONTINUOUS BY BONDING AROUND INSULATING JOINTS OR INSULATING PIPE). INTERIOR METAL WATER PIPING LOCATED MORE THAN 5FT. FROM THE POINT OF ENTRANCE SHALL NOT BE USED FOR SERVICE ENTRANCE GROUNDING.

METAL FRAME OF THE BUILDING OR STRUCTURE
A SINGLE STRUCTURAL METAL MEMBER. BUILDING STEEL MAY ALSO BE USED IF IT IS BONDED TO A METAL UNDERGROUND WATER PIPE, A CONCRETE INCASED ELECTRODE, A GROUND RING ROD AND PIPE ELECTRODES, OR PLATE ELECTRODES AS DESCRIBED IN NEC 250.52.

CONCRETE ENCASED ELECTRODE
AN ELECTRODE ENCASED BY AT LEAST 2IN. OF CONCRETE , LOCATED WITHIN AND NEAR THE BOTTOM OF A CONCRETE FOUNDATION OR FOOTING THAT IS IN DIRECT CONTACT WITH THE EARTH, CONSISTING OF AT LEAST 20FT. OF ONE OR MORE BARE OR ZINC GALVANIZED OR OTHER ELECTRICALLY CONDUCTIVE COATED STEEL REINFORCING BARS OR RODS OF NOT LESS THAN 1/2" DIAMETER OR BARE COPPER CONDUCTOR NOT SMALLER THAN 4AWG.

GROUNDING TRIPOD AT SERVICE ENTRANCE
THREE 3/4" DIAMETER BY 10FT. LONG COPPER CLAD GROUND RODS. GROUND RODS SHALL BE DRIVEN IN A TRIANGULAR SHAPE WITH 10FT. ON EACH SIDE OF THE TRIANGLE. GROUND RODS SHALL BE CONNECTED BY WAY OF A 1/2IN. X 4IN. X 4IN. COPPER PLATE TO A 16OZ. COPPER STRIP ELEMENT. THE COPPER STRIP ELEMENT SHALL BE A 12IN. WIDE CONTINUOUS TRIANGLE. GROUND RODS SHALL ALSO BE CONNECTED WITH (1) #4/0 BARE TINNED COPPER CABLE 19 STRAND. ALL CONNECTIONS SHALL BE MADE WITH A TYPE PCC-2Q2Q EXOTHERMIC CONNECTION OR APPROVED COMPRESSION FITTING.

LOAD OR DOWNSTREAM PANEL
ALL LOADS IN THE BUILDING SHALL HAVE AN EQUIPMENT GROUNDING CONDUCTOR PULLED TO THEM.

1 / E-502 SERVICE ENTRANCE GROUNDING DETAIL
SCALE: N.T.S.

APPROVED:

A/E DESIGNER OF RECORD

SEAL:

US ARMY CORPS OF ENGINEERS
AFGHANISTAN ENGINEER DISTRICT

Mark	Description	Date	Appr.	Mark	Description	Date	Appr.

U.S. ARMY CORPS OF ENGINEERS
AFGHANISTAN ENGINEER DISTRICT
APO AE 96338

Michael Baker Jr., Inc.
A unit of Michael Baker Corporation
Airside Business Park
100 Airside Drive
Moon Township, PA 15108
www.mbakercorp.com

Designed by: JRG
Dwn by: BJB
Ckd by: JRG
Reviewed by: JRG
Submitted by: BAKER
Date: 2/23/10
Rev: 0
Design file no.
Drawing code:
File name:
Plot date:
Plot scale:

STANDARD DESIGN
VARIOUS PROJECTS
VARIOUS LOCATIONS, AFGHANISTAN

ADMIN TRAINING COMPANY
ELECTRICAL DETAILS

Sheet reference number:
E-502

FIXTURE MARK 'A' & 'A2'

FIXTURE MARK 'C'

FIXTURE MARK 'H'

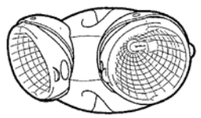

FIXTURE MARK 'E'

LIGHT FIXTURE SCHEDULE

FIXTURE MARK	STYLE NUMBER AND TYPE	NUMBER AND TYPE OF LAMPS	VOLTAGE	MOUNTING	NOTES
A	PARABOLIC SURFACE/PENDANT MOUNTED 300MM X 1200MM FLUORESCENT FIXTURE WITH ELECTRONIC BALLAST	(2) 32W 3500K	220V – 1ø 50HZ	PENDANT MOUNTED FROM CEILINGS	FURNISHED WITH ELECTRONIC BALLAST. PARABOLIC LOUVER SHALL BE SPECULAR LENS IRIDESCENCE TYPE.
A2	SAME AS FIXTURE 'A' WITH EMERGENCY BALLAST	(2) 32W 3500K	220V – 1ø 50HZ	PENDANT MOUNTED FROM CEILINGS	FURNISHED WITH ELECTRONIC BALLAST. PARABOLIC LOUVER SHALL BE SPECULAR LENS IRIDESCENCE TYPE. EMERGENCY BALLAST SELF TEST.
C	INCANDESCENT ONE PIECE W/ APPROVED LENS STABILIZED HIGH IMPACT POLY CARBONATE.	(1) A19 – 100W INCANDESCENT	220V – 1ø 50HZ	WALL MOUNTED ABOVE EXTERIOR DOORS	
H	REMOTE HEAD EXTERIOR LIGHT HEAD POWERED FROM EXIT SIGN BATTERY– 12V DOUBLE HEAD CORROSION RESISTANT WITH UL34 WEATHERPROOF CONSTRUCTION	(2) 12W/12V HALOGEN LAMP	12V – 1ø 50HZ	EXTERIOR WALL MOUNTED AT TOP OF DOOR HEIGHT	
E	UNIVERSAL MOUNT ENGINEER GRADE THERMOPLASTIC HOUSING EXIT SIGN WITH LED LAMPS, RED LETTERS 6" IN HEIGHT WITH ARROWS AS INDICATED, WITH 12V CADMIUM BATTERY WITH REMOTE HEAD CAPABILITY	LED LAMPS	220V – 1ø 50HZ	UNIVERSAL MOUNTING	

PANELBOARD ATC01 SURFACE MOUNTED
_____ AMP. MAIN LUGS (OR) 150 AMP. MAIN BREAKER W/ 150 AMP. TRIP
CIRCUIT BREAKER TYPE 380/220 VOLTS 3 PHASE 4 WIRE 50 HZ 225 AMP. BUS

CKT. NO.	TRIP AMPS	NO. POLES	WIRE MM²	GND MM²	CONDUIT MM	LOAD SERVED	LOAD–KVA AO	LOAD–KVA BO	LOAD–KVA CO	LOAD–KVA AO	LOAD–KVA BO	LOAD–KVA CO	LOAD SERVED	CONDUIT MM	GND MM²	WIRE MM²	NO. POLES	TRIP AMPS	CKT. NO.
1	20	1	4.0	4.0	20	LIGHTING – RM 100–104	2.6			1.0			RECEPTACLES – RM 107	20	4.0	4.0	1	20	2
3	20	1	4.0	4.0	20	LIGHTING – RM 105–107		0.7			1.0		RECEPTACLES – RM 106	20	4.0	4.0	1	20	4
5	20	2	4.0	4.0	20	ELECTRIC HEAT #2 – RM 106,107			2.6			1.0	RECEPTACLES – RM 106	20	4.0	4.0	1	20	6
7							2.6			0.8			RECEPTACLES – RM 106	20	4.0	4.0	1	20	8
9	20	2	4.0	4.0	20	ELECTRIC HEAT #4 – RM 105		2.0			0.8		RECEPTACLES – RM 104	20	4.0	4.0	1	20	10
11									2.0			1.2	RECEPTACLES – RM 104	20	4.0	4.0	1	20	12
13	20	2	4.0	4.0	20	ELECTRIC HEAT #4 – RM 105	2.0			1.0			RECEPTACLES – RM 104	20	4.0	4.0	1	20	14
15								2.0			1.0		RECEPTACLES – RM 104	20	4.0	4.0	1	20	16
17	20	2	4.0	4.0	20	ELECTRIC HEAT #4 – RM 104			2.0			1.0	RECEPTACLES – RM 103	20	4.0	4.0	1	20	18
19							2.0			1.0			RECEPTACLES – RM 106	20	4.0	4.0	1	20	20
21	20	2	4.0	4.0	20	ELECTRIC HEAT #4 – RM 104		2.0			0.4		RECEPTACLES – RM 101	20	4.0	4.0	1	20	22
23									2.0			2.0	ELECTRIC HEAT #4 – RM 104	20	4.0	4.0	2	20	24
25	20	2	4.0	4.0	20	ELECTRIC HEAT #4 – RM 104	2.0			2.0									26
27								2.0			0.5		EXHAUST FAN – RM 105	20	4.0	4.0	1	20	28
29	20	2	4.0	4.0	20	ELECTRIC HEAT #4 – RM 103			2.0			1.0	CEILING FANS – RM 104	20	4.0	4.0	1	20	30
31							2.0			1.0			CEILING FANS – RM 105–107	20	4.0	4.0	1	20	32
33	20	2	4.0	4.0	20	ELECTRIC HEAT #4 – RM 106		2.0			2.0		ELECTRIC HEAT #4 – RM 104	20	4.0	4.0	2	20	34
35									2.0			2.0							36
37	20	1				SPARE							SPARE				1	20	38
39	20	1				SPARE							SPARE				1	20	40
41	20	1				SPARE							SPARE				1	20	42
							13.2	10.7	12.6	6.8	5.7	8.2							

TOTAL CONN. LOAD PER PHASE (KVA): AO 20.0 BO 16.4 CO 20.8

TOTAL CONN. LOAD 57.2 KVA. 70 % DEMAND = ESTIMATED DEMAND LOAD 40.0

* MAIN BREAKER SHALL BE 3P EARTH GROUND TYPE

APPROVED:

A/E DESIGNER OF RECORD

SEAL:

US ARMY CORPS OF ENGINEERS
AFGHANISTAN ENGINEER DISTRICT

Mark	Description	Date	Appr.	Mark	Description	Date	Appr.

Rev: 0
Date: 2/23/10
Design file no.
Drawing code:
File name:
Plot date:
Plot scale:

Designed by: JRG
Dwn by: BJB
Ckd by: JRG
Reviewed by: JRG
Submitted by: BAKER

U.S. ARMY CORPS OF ENGINEERS
AFGHANISTAN ENGINEER DISTRICT
APO AE 96338

Michael Baker Jr., Inc.
A unit of Michael Baker Corporation
Airside Business Park
100 Airside Drive
Moon Township, PA 15108
www.mbakercorp.com

STANDARD DESIGN
VARIOUS PROJECTS
VARIOUS LOCATIONS, AFGHANISTAN

ADMIN. TRAINING COMPANY
ELECTRICAL LIGHT FIXTURE AND PANEL SCHEDULES

Sheet reference number:
E–601

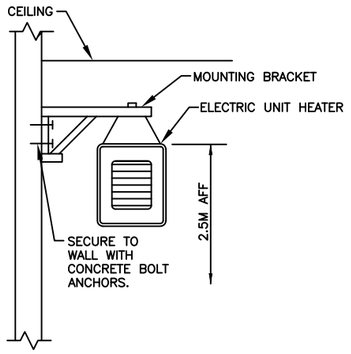

2 M-101 ELECTRIC UNIT HEATER MOUNTING DETAIL
N.T.S.

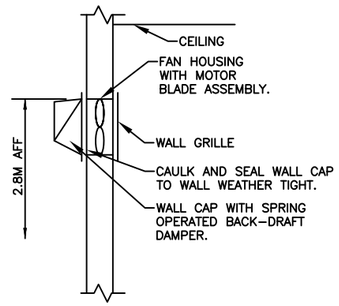

3 M-101 EXHAUST FAN DETAIL
N.T.S.

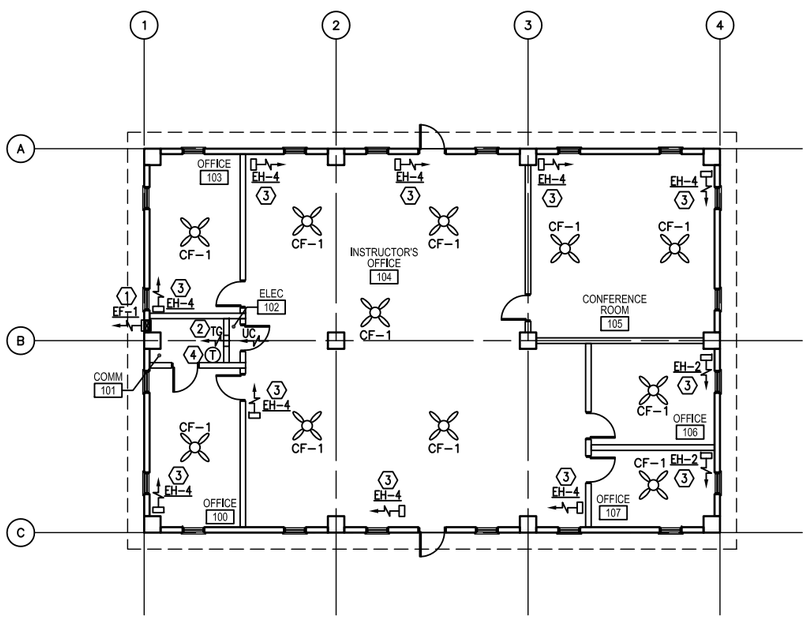

1 M-101 FLOOR PLAN - HVAC
SCALE: 1:100

GENERAL NOTES:

1. DO NOT SCALE DRAWINGS – ALL DIMENSIONS AND CONDITIONS SHALL BE CHECKED AND VERIFIED BY THE CONTRACTOR AT THE SITE.
2. ALL WORK PERFORMED ON THIS BUILDING SHALL BE IN COMPLIANCE WITH ALL PERTINENT CODES, RULES, ORDINANCES AND REGULATIONS OF THE GOVERNING AUTHORITIES.
3. ALL WORK PERFORMED UNDER AND IN CONNECTION WITH THESE DRAWINGS AND SPECIFICATIONS SHALL BE IN STRICT COMPLIANCE WITH THE LATEST SAFETY AND HEALTH STANDARDS.

SYMBOLS:

- (X) KEY NOTE
- (.050) AIR VOLUME IN CUBIC METERS PER SECOND (CMS)
- VOLUME DAMPER
- (T) THERMOSTAT WITH LOCKING COVER
- UC DOOR UNDERCUT
- TG TRANSFER GRILLE

ABBREVIATIONS:

AFF	ABOVE FINISH FLOOR
CF	CEILING FANS
CMS	CUBIC METERS PER SECOND
STATS	THERMOSTATS

KEY NOTE:

1. WALL EXHAUST FAN WITH SPRING OPERATED BACK–DRAFT DAMPER.
2. 200x150 (8x6) TRANSFER GRILLE. MOUNT GRILLE 800mm BELOW CEILING. COORDINATE LOCATION IN FIELD WITH OTHER TRADES.
3. UNIT HEATER SECURED FROM WALL. SEE DETAIL THIS SHEET.
4. THERMOSTAT MOUNTED AS HIGH AS POSSIBLE. INTERLOCK STAT WITH CORRESPONDING EXHAUST FAN, SET FAN TO ENERGIZE ON RISE IN TEMPERATURE ABOVE 25°C (77°F).

ELECTRIC UNIT HEATER SCHEDULE

NO.	CMS	KW	F.A.T. °C	ELECT. CHAR.	MOUNTING
EH–2	0.200	2.6	38	380/1/50	WALL HUNG
EH–4	0.200	4	38	380/1/50	WALL HUNG

NOTES:
1. UNIT HEATERS SHALL HAVE TAMPER PROOF INTEGRAL STATS.
2. COORDINATE LOCATION AND ORIENTATION IN FIELD

EXHAUST FAN SCHEDULE

NO.	TYPE	FAN CMS	DRIVE	HP	SP mmH20	ELECTRICAL DATA	SWITCH
EF–1	WALL	0.035	DIRECT	FRACT	13	220/1/50	W/ STAT

NOTE:
1. FANS SHALL HAVE SPRING OPERATED BACK DRAFT DAMPER.

CEILING FAN

NO.	BLADE SIZE mm	BLADE SIZE IN	VOLTAGE	SWITCH	REMARKS
CF–1	1320	52	220/1/50	WALL	3 SPEED REVERSIBLE MOTOR

NOTES:
1. INSTALL FANS 2.5M AFF.
2. PROVIDE WITH OUT LIGHT FIXTURE.
3. PROVIDE WITH REMOTE MOUNTED ON–OFF SWITCH SHOWN ON ELECTRICAL DRAWINGS.

LINEAR DIMENSIONS SHOWN ARE IN MILLIMETERS (MM), UNLESS OTHERWISE NOTED

0 2000 4000
SCALE: 1:100

APPROVED:

A/E DESIGNER OF RECORD

SEAL:

US ARMY CORPS OF ENGINEERS
AFGHANISTAN ENGINEER DISTRICT

Mark	Description	Date	Appr.	Mark	Description	Date	Appr.

Date: 02/23/10 Rev: 0
Design file no.
Drawing code:
File name: AAAATCOM-101
Plot date: 02/00/2010
Plot scale: 1:100

Designed by: RML
Drawn by: LJN
Chd. by: CJM
Reviewed by: MRS
Submitted by:
BAKER

U.S. ARMY CORPS OF ENGINEERS
AFGHANISTAN ENGINEER DISTRICT
APO AE 09338

Michael Baker Jr., Inc.
A unit of Michael Baker Corporation
Airside Business Park
100 Airport Drive
Moon Township, PA 15108
www.michaelbakercorp.com

STANDARD DESIGN
VARIOUS PROJECTS
VARIOUS LOCATIONS, AFGHANISTAN

ADMIN TRAINING COMPANY

HVAC – FLOOR PLAN, SCHEDULES AND DETAILS

Sheet reference number:
M–101

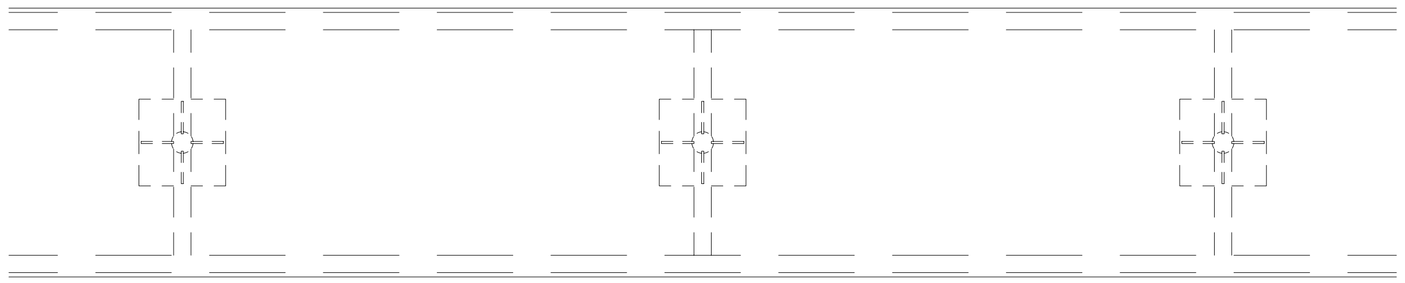

1 MESS-A-3 | MESS-A-3 FURNITURE DETAIL SCALE 1:10

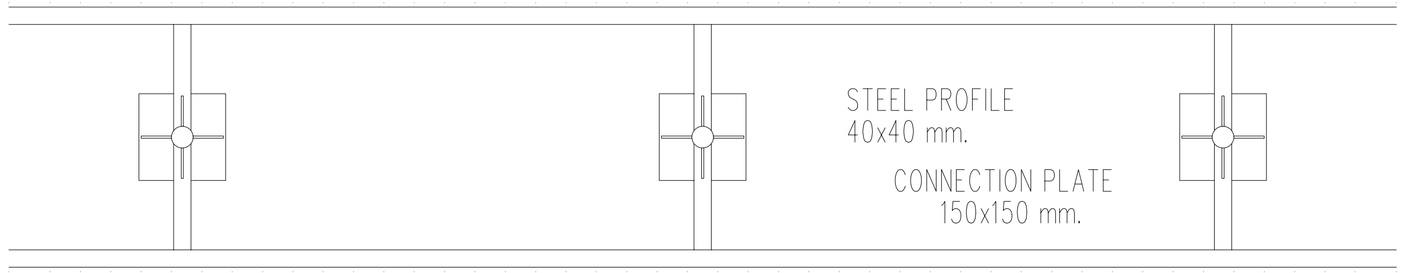

2 MESS-A-3 | MESS-A-3 FURNITURE DETAIL SCALE 1:10

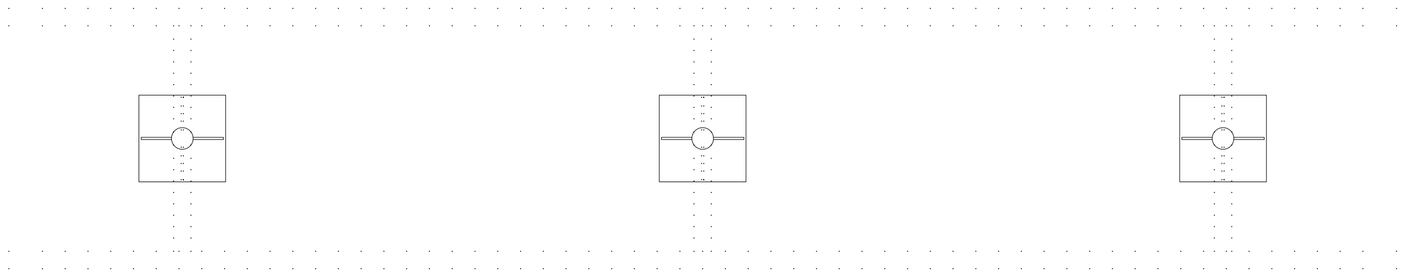

3 MESS-A-3 | MESS-A-3 FURNITURE DETAIL SCALE 1:10

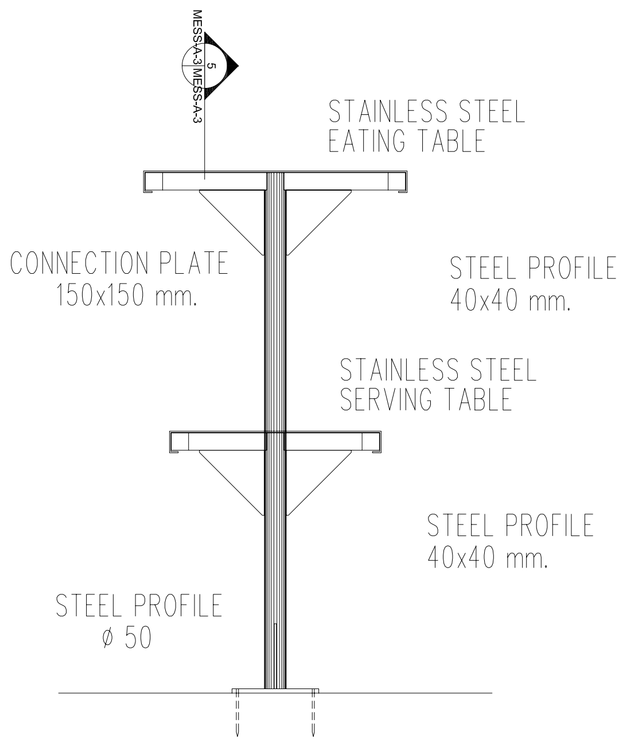

4 MESS-A-1 | MESS-A-3 FURNITURE DETAIL SCALE 1:10

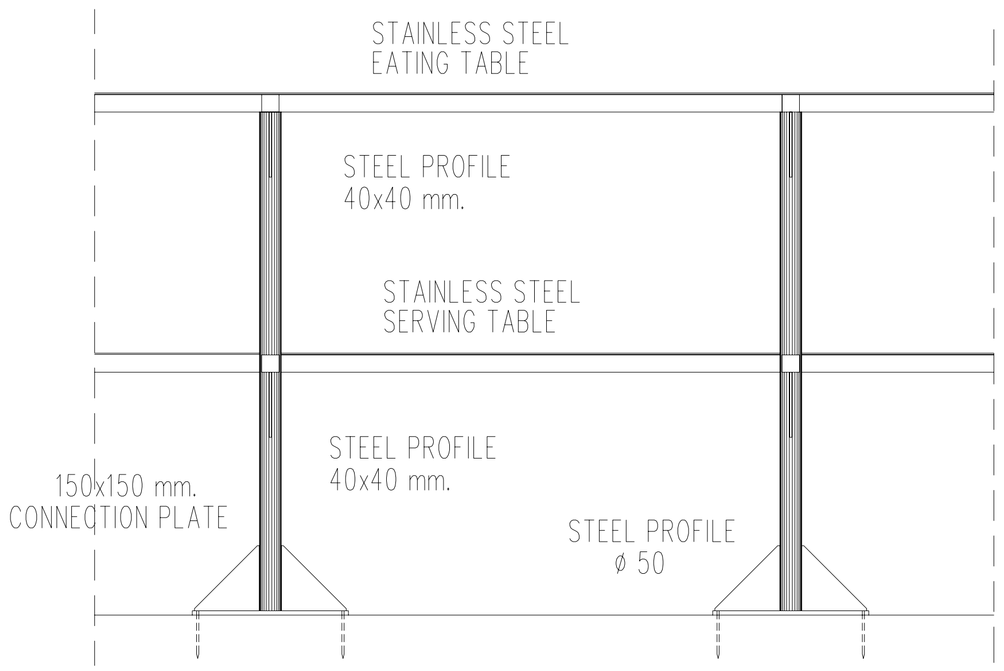

5 MESS-A-3 | MESS-A-3 FURNITURE DETAIL SCALE 1:10

NOTE:

All lineer dimensions are in mm. , elevations are in m. unless otherwise noted.

U.S. ARMY CORPS OF ENGINEERS AFGHANISTAN ENGINEER DISTRICT

Symbol	Description	Date	Appr.
0	ISSUED FOR CORRECTED %100 DESIGN APPROVAL	02.02.07	

Symbol	Description	Date	Appr.

Designed by: FARUK ŞAHİN
Drawn by: GÖZDEM ÜNER TURAY
Contract Date: 22 AUG 2006
Reviewed by: ARMAĞAN BAŞÖZMEŞ
Drawing Code: ARCH
File Name: MESS-A-3 Details.dwg
Plot Date: 02.02.07
Plot Scale : 1:10
Submitted by: SEÇİL KUYUCAK
Solicitation No: W917PM-06-R-0029
Contract No: W917PM-06-C-0018

CONTRACTOR: zafer Inşaat-Taahhüt
DESIGNER: GÜZEY MİMARLIK ARCHITECTURE

DEPARTMENT OF THE ARMY
U.S. ARMY CORPS OF ENGINEERS
AFGHANISTAN ENGINEER DISTRICT
KABUL, AFGHANISTAN

U.S. ARMY CORPS OF ENGINEERS

KABUL, AFGHANISTAN
PDC : 111
KMTC CLASSROOMS & RANGES
FY : 06

DETAILS of COVERED MESS

Sheet Reference Number
MESS-A-3

SHEET 127 of 138

COVERED MESS
TOTAL NUMBER IN SITE: 4

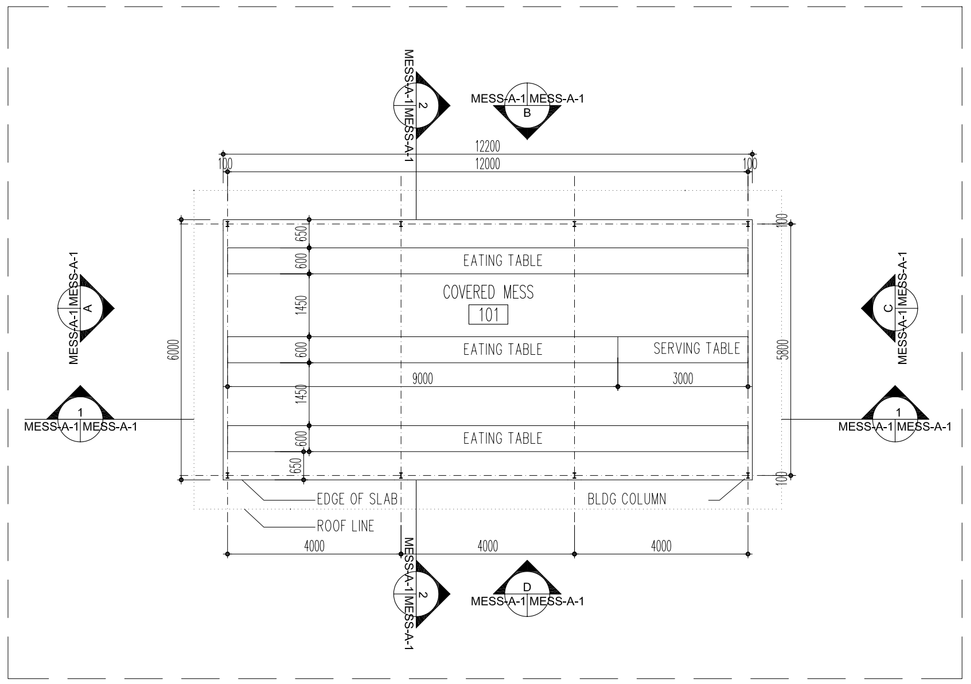

1 MESS-A-1 | MESS-A-1 COVERED MESS PLAN
SCALE 1:100

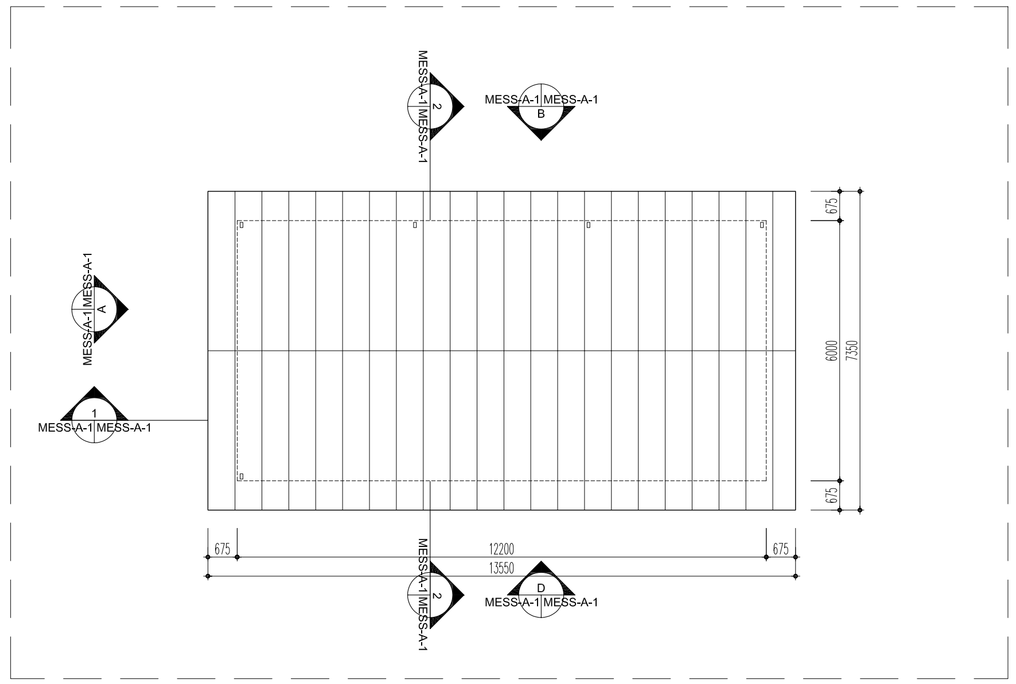

2 LFR-A-1 | MESS-A-1 ROOF PLAN
SCALE 1:100
~~HGR-A-1~~
BLH-A-1

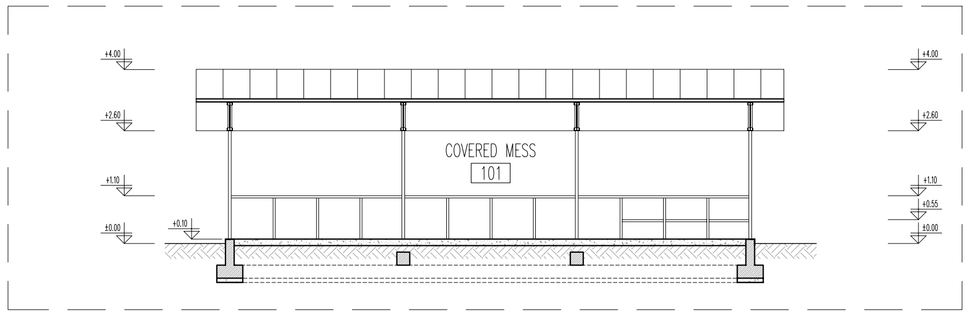

3 ~~MESS-A-1~~ | ~~MESS-A-1~~ SECTION 1-1
SCALE 1:100

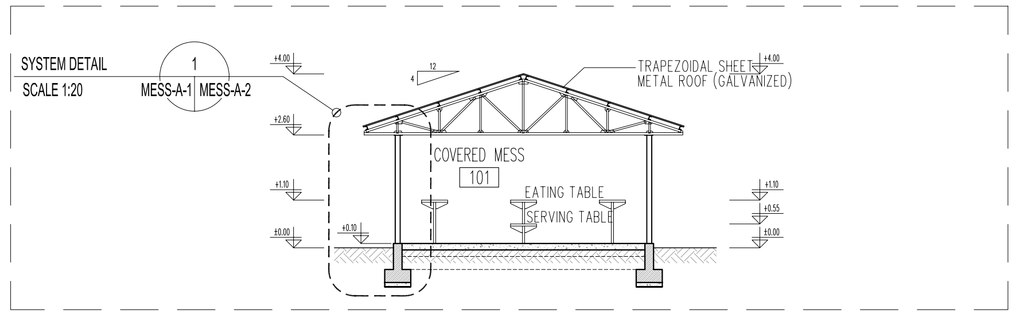

4 ~~MESS-A-1~~ | ~~MESS-A-1~~ SECTION 2-2
SCALE 1:100

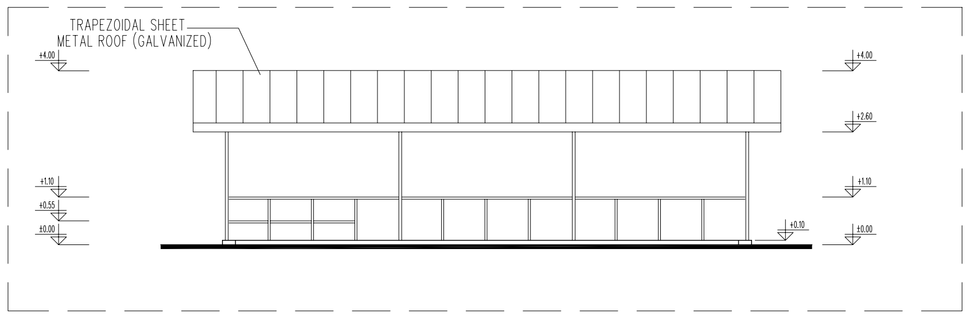

5 ~~MESS-A-1~~ | ~~MESS-A-1~~ ELEVATION B
SCALE 1:100

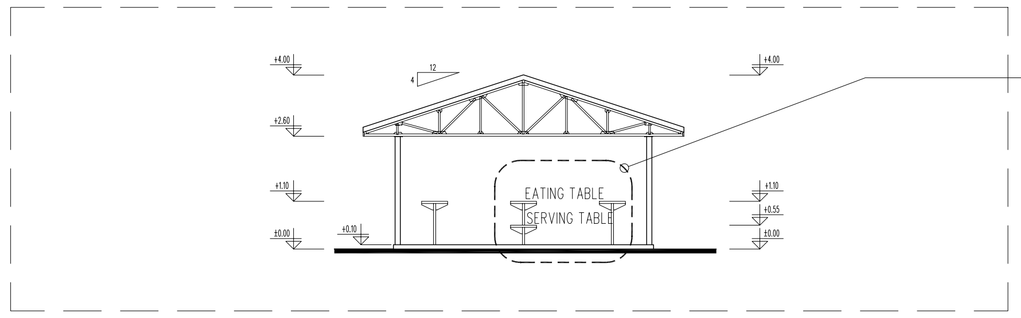

4 MESS-A-1 | MESS-A-3 FURNITURE DETAIL
SCALE 1:10

6 ~~MESS-A-1~~ | ~~MESS-A-1~~ ELEVATION A-C
SCALE 1:100

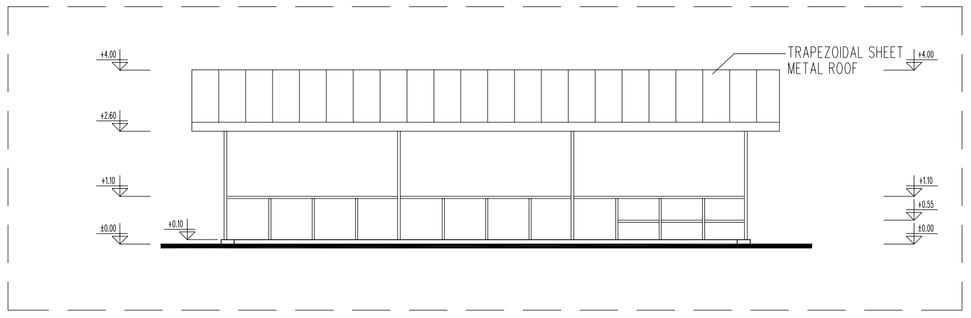

7 ~~MESS-A-1~~ | ~~MESS-A-1~~ ELEVATION D
SCALE 1:100

NOTE:
All linear dimensions are in mm. , elevations are in m. unless otherwise noted.

0 1.00 2.00 5.00 m
SCALE= 1:100

U.S. ARMY CORPS OF ENGINEERS
AFGHANISTAN ENGINEER DISTRICT

Symbol	Description	Date	Appr.
3	ISSUED FOR CORRECTED 1/100 DESIGN APPROVAL	02.02.07	
2	ISSUED FOR 50% DESIGN APPROVAL	05.01.07	
1	REISSUED FOR 1/35 DESIGN APPROVAL	21.11.06	
0	ISSUED FOR 1/35 DESIGN APPROVAL	20.09.06	

Designed by: FARUK ŞAHİN
Drawn by: GÖZDEM ÜNER TURAN
Contract Date: 22 AUG 2006
Reviewed by: ARMAĞAN BAŞÇAMEŞ
Drawing Code: ARCH
File Name: MESS-A-1.dwg
Plot Date: 02.02.07
Plot Scale : 1:100
Submitted by: SEÇİL KUYUCAK
Solicitation No.: W917PM-06-R-0029
Contract No.: W917PM-06-C-0018

CONTRACTOR: zafer Inşaat-Contractor
DESIGNER: GÜZEY MİMARLIK ARCHITECTURE

DEPARTMENT OF THE ARMY
U.S. ARMY CORPS OF ENGINEERS
AFGHANISTAN ENGINEER DISTRICT
KABUL, AFGHANISTAN

U.S. ARMY CORPS OF ENGINEERS

KABUL, AFGHANISTAN
PDC : 111
KMITC CLASSROOMS & RANGES
FY : 06

COVERED MESS

Sheet Reference Number
MESS-A-1

ROAD CROSS SECTION
TYPE - 3

Source: Ministry of Rehabilitation & Rural Development Standard Drawings, page #5

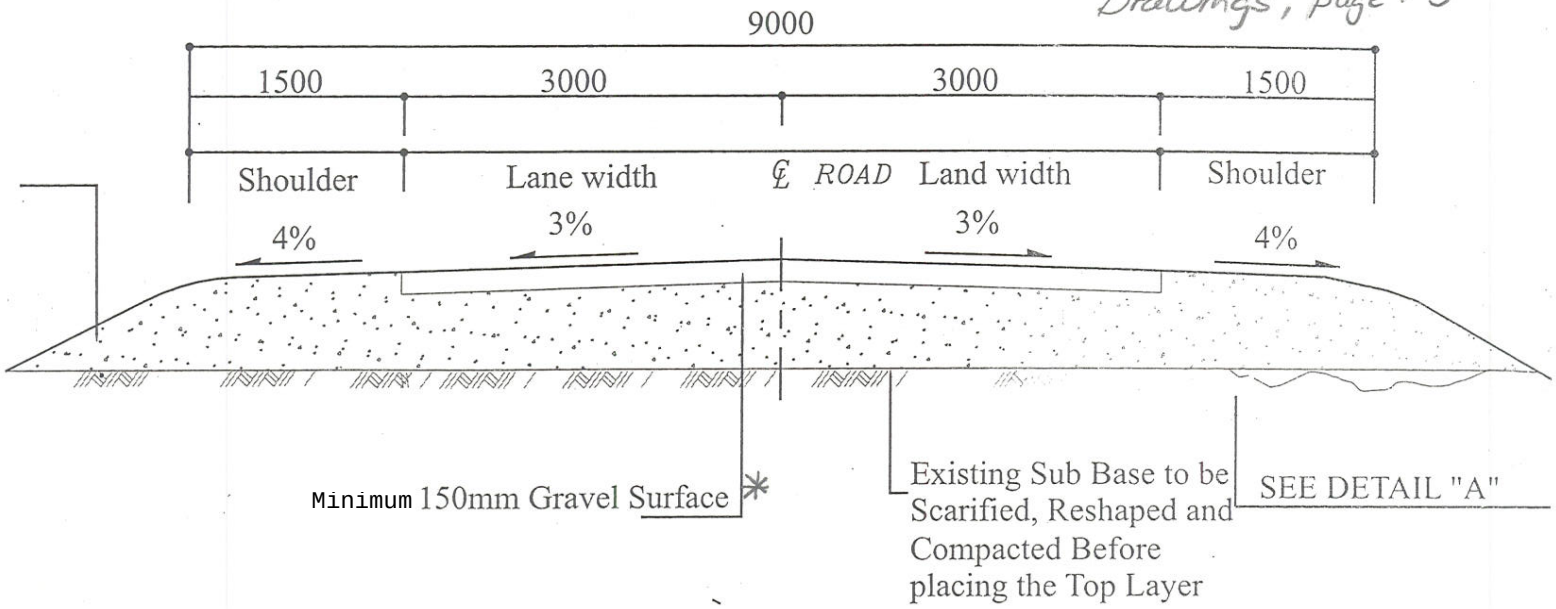

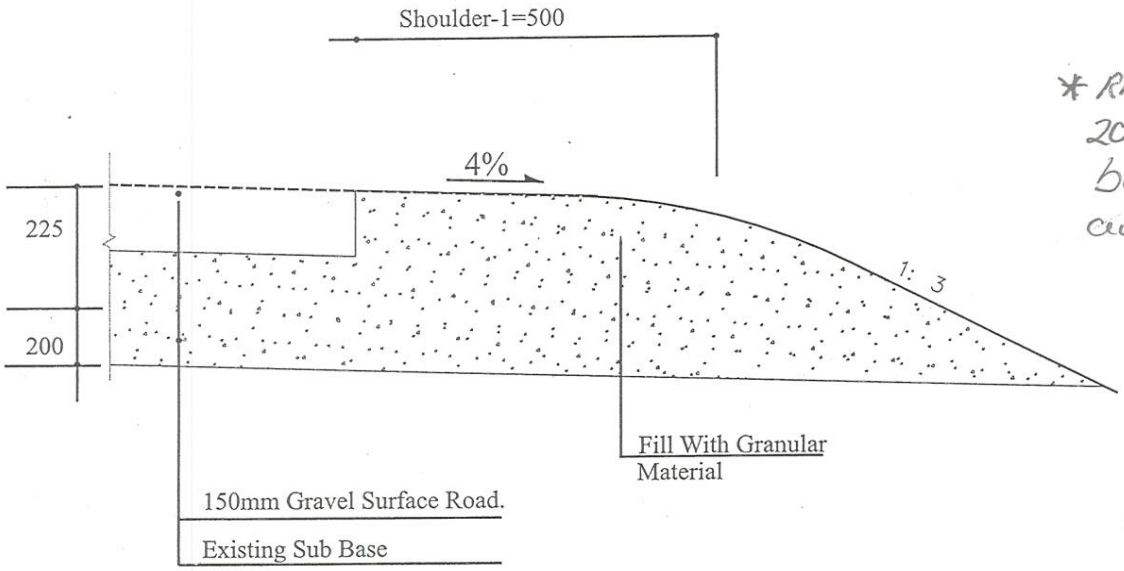

* RANGE ROADS ONLY; USE 200 mm for roads between range complex and ANA Base

DETAIL "A"

NOTES
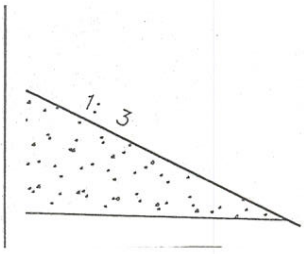
1. All dimensions are in "mm" unless otherwise specified
2. In general, the side slope shown on the typical drawing shall be applied only for small cut and fill areas.
   For cut or fill of more than 2.0 meters
   the side slopes should be determined based on the
   result of detailed soil survey and approval of NEEPRA autthority
3. 24 hrs soaked CBR for sub-grade shall be >5%
4. 24 hrs soaked CBR for sub-base course shall be >40%
5. 24 hrs soaked CBR for raod base course shall be > 80%