CHAPTER U

DISTRIBUTION STANDARDS

DISTRIBUTION CONSTRUCTION MATERIALS

ASSEMBLIES

MV STRUCTURES

LV STRUCTURES

TRENCHES

FIBER OPTIC CABLES

SWITCHING EQUIPMENT

MISCELLANEOUS

CABLES AND CONDUCTORS

MV UNDERGROUND CABLES/ACCESSORIES

LV UNDERGROUND CABLES/ACCESSORIES

OVERHEAD MV CONDUCTOR/ACCESSORIES

ABC LV CABLES AND ACCESSORIES

INSULATOR AND ACCESSORIES

MISCELLANEOUS

MV UNDERGROUND CABLES/ACCESSORIES

C1 MV UNDERGROUND CABLE 12/20 KV, N2XS2Y, single core, copper, XLPE

T1 OUTDOOR TERMINATION KIT 20 KV, XLPE insulation

T2 INDOOR TERMINATION KIT 20 KV, XLPE insulation

J1 STRAIGHT JOINTS KIT 20 KV, XLPE insulation

C2 SHRINK CAP, XLPE insulation

LV UNDERGROUND CABLES/ACCESSORIES

C3 LV UNDERGROUND CABLE 0.6/1 KV, NYCWY, concentric copper conductor

T3 LV UNDERGROUND CABLE 0.6/1 KV, NYY-J,three core

C4 OUTDOOR TERMINATION KIT 0.6/1 KV

J2 UNDERGROUND STRAIGHT JOINT KIT 0.6/1 KV

C5 END CAP 0.6/1 KV, according to Chapter D (Technical Specification)

OVERHEAD MV CONDUCTOR/ACCESSORIES

C6 ALUMINUM ALLOY CONDUCTOR STEEL REINFORCED (ACSR)

S1 COMPRESSION SPLICE, full tension for ACSR

S2 REPAIR SLEEVE, for ACSR conductor

C7 COMPRESSION TAP CONNECTOR, Type H

S3 COMPRESSION STIRRUP CONNECTOR , for ACSR conductor

C8 HOT LINE CLAMP, for installation on compression stirrups

ABC LV CABLES AND ACCESSORIES

C9 ABC CABLES (QUADRUPLEX) 0.6/1 KV, aluminum conductor

S4 SPIRAL (PIG TAIL) HOOK

N1 NUT HOOK,

N2 NUT HOOK (EXTERNAL ANGLE)

C10 DEAD END CLAMP, for non-insulated neutral AAAC with cutting

C11 DEAD END CLAMP, for non-insulated neutral AAAC without cutting

C12 SUSPENSION CLAMP (UP TO 30º)

Y1 YOKE UNIVERSAL

S5 PRE-INSULATED SLEEVES

S6 COMPRESSION SLEEVES (FULL TENSION)

C13 INSULATION PIERCING CONNECTOR

C14 SEALING CAP 0.6/1 KV

INSULATOR AND ACCESSORIES

I1 SUSPENSION INSULATOR, porcelain, ball and socket according to Chapter Q (Technical Specification)

I2 PIN TYPE INSULATOR, porcelain according to Chapter Q (Technical Specification)

C15 WEDGE TYPE TENSION CLAMP

C16 WEDGE TYPE TENSION CLAMP, for ACSR conductor with current loop

B4 BALL CLEVIS

N3 EYE NUT

E1 SOCKET EYE STRAIGHT,

P1 POLE TOP PIN

P2 SHORT SHANK PIN

P3 OFFSET POLE TOP PIN,

P4 DOUBLE ARMING PLATE

MISCELLANEOUS

A1 SURGE ARRESTER,

B1 DOUBLE ARMING BOLT

B2 MACHINE BOLT

B5 BUCKLE FOR STRAPS

C17 COPPER CONDUCTOR

C18 GROUND ROD CLAMP

C19 GROUND STUD CONNECTOR (SPLIT BOLT)

G1 GROUND WIRE MOLDING GUARD

R1 GROUND ROD

S7 STRAP

S8 STRAPS

S9 FACADE SADDLES

W1 ROUND WASHER

W2 SQUARE WASHER

W3 SPRING LOCK WASHER

C1

MV UNDERGROUND CABLE 12/20 KV, N2XS2Y, single core, copper, XLPE according to Chapter C (Tech. Specification)

	Size	Insulated
a)	1 x 50 RM / 16	12/20 kV
b)	1 x 95 RM / 16	12/20 kV
c)	1 x 120 RM / 16	12/20 kV
d)	1 x 240 RM / 25	12/20 kV

Used for interconnections electrical station and outgoings to overhead line

T1

OUTDOOR TERMINATION KIT 20 KV, XLPE insulation according to Chapter C (Technical Specification)

For cable size

a) 1 x 50 RM / 16

b) 1 x 95 RM / 16

c) 1 x 120 RM / 16

d) 1 x 240 RM / 25

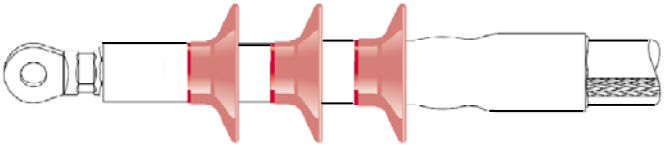

Used for outdoor MV underground termination cable

T2

INDOOR TERMINATION KIT 20 KV, XLPE insulation according to Chapter C (Technical Specification)

For cable size

a) 1 x 50 RM / 16

b) 1 x 95 RM / 16

c) 1 x 120 RM / 16

d) 1 x 240 RM / 25

Used for indoor MV underground termination cable

Comment

J1

STRAIGHT JOINTS KIT 20 KV, XLPE insulation according to Chapter C (Technical Specification)

For cable size

a) 1 x 50 RM / 16

b) 1 x 95 RM / 16

c) 1 x 120 RM / 16

d) 1 x 240 RM / 25

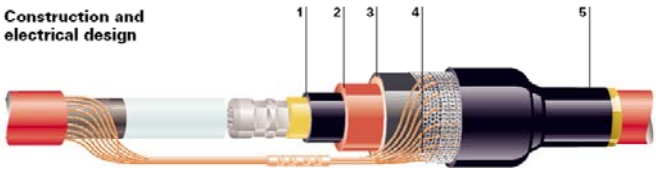

Used for joint MV underground cable

C2

SHRINK CAP, XLPE insulation according to Chapter C (Technical Specification)

For cable size

a) 1 x 50 RM / 16

b) 1 x 95 RM / 16

c) 1 x 120 RM / 16

d) 1 x 240 RM / 25

Used for protection underground cable

Comment

C3

LV UNDERGROUND CABLE 0.6/1 KV, NYCWY, concentric copper conductor according to Chapter D (Tech. Specification)

	Size	Insulated
a)	4 x 50 SM / 25	0.6/1 kV
b)	4 x 120 SM / 70	0.6/1 kV
c)	4 x 150 SM / 70	0.6/1 kV

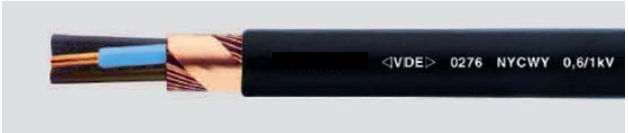

Used for interconnections between compact station to overhead line, feeder pillar and meter boxes

C4

LV UNDERGROUND CABLE 0.6/1 KV, NYY-J,three core according to Chapter D (Technical Specification)

	Size	Insulated
a)	3 x 4 RE	0.6/1 kV
b)	3 x 6 RE	0.6/1 kV
c)	3 x 10 RE	0.6/1 kV
d)	3 x 16 RE	0.6/1 kV
e)	5 x 10 RE	0.6/1 kV
f)	5 x 16 RE	0.6/1 kV
g)	5 x 25 RM	0.6/1 kV
h)	1 x 240 RM	0.6/1 kV
i)	1 x 120 RM	0.6/1 kV

Item a) to g) used for interconnections between service cable to meter boxers and customer

Item h) used for connections LV neutral transformer

Item i) used for interconnections between LV transformer to feeder pillar

Comment

T3

OUTDOOR TERMINATION KIT 0.6/1 KV, according to Chapter D (Technical Specification)

For cable size

a) NYCWY 4 x 50 SM/25
b) NYCWY 4 x 120 SM/70
c) NYCWY 4 x 150 SM/70

J2

UNDERGROUND STRAIGHT JOINT KIT 0.6/1 KV, according to Chapter D (Technical Specification)

For cable size

a) NYCWY 4 x 50 SM/25
b) NYCWY 4 x 120 SM/70
c) NYCWY 4 x 150 SM/70

C5

END CAP 0.6/1 KV, according to Chapter D (Technical Specification)

For cable size

a) NYCWY 4 x 50 SM/25
b) NYCWY 4 x 120 SM/70
c) NYCWY 4 x 150 SM/70

Comment

C6

ALUMINUM ALLOY CONDUCTOR STEEL REINFORCED (ACSR), according to Chapter E (Technical Specification)

	Code	Overall diameter	Weight	Breaking load
a)	70/12	11.5 mm	284 kg/km	26800 N
b)	120/20	15.5 mm	493 kg/km	45650 N
c)	185/30	19.0 mm	741 kg/km	66200 N

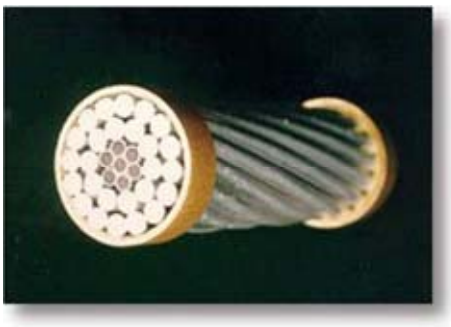

Used for transport energy in Medium Voltage

S1

COMPRESSION SPLICE, full tension for ACSR conductor according to Chapter E (Technical Specification)

	Conductor size	Overall diameter
a)	70/12 mm²	11.5 mm
b)	120/20 mm²	15.5 mm
c)	185/30 mm²	19.0 mm

Used for joint conductor ACSR

S2

REPAIR SLEEVE, for ACSR conductor according to Chapter E (Technical Specification)

	Conductor size	Overall diameter
a)	70/12 mm²	11.5 mm
b)	120/20 mm²	15.5 mm
c)	185/30 mm²	19.0 mm

Used for repair conductor ACSR

Comment

C7

COMPRESSION TAP CONNECTOR, Type H according to Chapter E (Technical Specification)

	Main conductor (diameter)	Tap conductor (diameter)
a)	70/12 mm² (11.5 mm)	70/12 mm² (11.5 mm)
b)	120/20 mm² (15.5 mm)	120/20 mm² (15.5 mm)
c)	185/30 mm² (19.0 mm)	185/30 mm² (19.0 mm)
d)	120/20 mm² (15.5 mm)	70/12 mm² (11.5 mm)
e)	185/30 mm² (19.0 mm)	70/12 mm² (11.5 mm)
f)	185/30 mm² (19.0 mm)	120/20 mm² (15.5 mm)

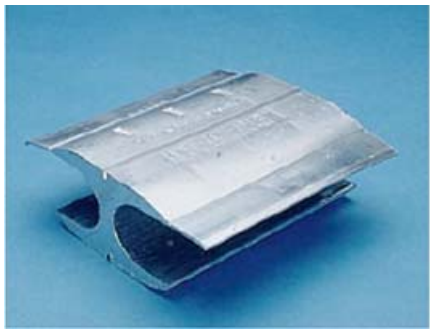

Used for joint conductor ACSR

S3

COMPRESSION STIRRUP CONNECTOR , for ACSR conductor, casting aluminum alloy and stirrup copper rod according to Chapter E (Technical Specification)

	Casting for conductor		Stirrups section
	Size	Diameter	
a)	70/12 mm²	11.5 mm	10 mm
b)	120/20 mm²	15.5 mm	10 mm
c)	185/30 mm²	19.0 mm	10 mm

H min = 95 mm and Bmin = 100 mm

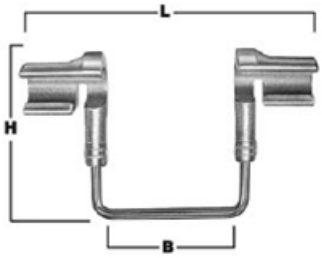

Used for protect conductor of electric arcing

C8

HOT LINE CLAMP, for installation on compression stirrups according to Chapter E (Technical Specification)

	Main	Tap
a)	4 - 10 mm	4 - 10 mm

Used for installation on energized conductor

Comment

C9

ABC CABLES (QUADRUPLEX) 0.6/1 KV, aluminum conductor according to Chapter F (Technical Specification)

	Phases conductor	Neutral messenger
a)	3 x 50 mm²	1 x 50 mm²
b)	3 x 95 mm²	1 x 70 mm²
c)	3 x 120 mm²	1 x 70 mm²

Used for transport energy in low voltage overhead line

S4

SPIRAL (PIG TAIL) HOOK, with washer and nut according to Chapter F (Technical Specification)

	Dimensions	
	Diameter	Length
a)	M16	300 mm
b)	M16	360 mm

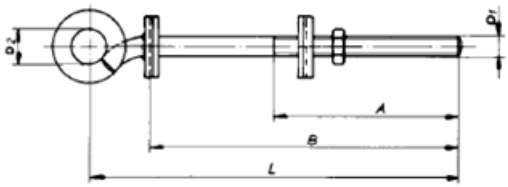

Spiral Hook

Used for support low voltage cables

N1

NUT HOOK, according to Chapter F (Technical Specification)

For bolt

a) M 16

Used for support low voltage cables

N2

NUT HOOK (EXTERNAL ANGLE), for non-insulated neutral AAAC according to Chapter F (Technical Specification)

Neutral section

a) 50 mm²

Used for support neutral messenger in low voltage overhead line

Comment

C10

DEAD END CLAMP, for non-insulated neutral AAAC with cutting according to Chapter F (Technical Specification)

Neutral section

a) 50 mm²

b) 70 mm²

Used for support neutral messenger in low voltage overhead line

C11

DEAD END CLAMP, for non-insulated neutral AAAC without cutting according to Chapter F (Technical Specification)

Neutral section

a) 50 mm²

b) 70 mm²

Used for support neutral messenger in low voltage overhead line

C12

SUSPENSION CLAMP (UP TO 30º), for non-insulated neutral AAAC according to Chapter F (Technical Specification)

Neutral section

a) 50 mm²

b) 70 mm²

Used for support neutral messenger in low voltage overhead line

Y1

YOKE UNIVERSAL, for two suspension clamps (line angles up to 60º) according to Chapter F (Technical Specification)

Neutral section

a) 50 mm²

Used for support neutral messenger in low voltage overhead line

Comment

S5

PRE-INSULATED SLEEVES, for Aluminum conductor according to Chapter F (Technical Specification)

Conductor section

a) 50 mm²

b) 95 mm²

c) 120 mm²

Used for joint conductor LV

S6

COMPRESSION SLEEVES (FULL TENSION), for non-insulated neutral according to Chapter F (Technical Specification)

Neutral section

a) 50 mm²

b) 70 mm²

Used for joint neutral messenger

C13

INSULATION PIERCING CONNECTOR, for insulated overhead lines according to Chapter F (Technical Specification)

	Main range	Branch range
a)	25-95 mm² AL	25-95 mm² AL
b)	50-120 mm² AL	50-120 mm² AL
c)	25-95 mm² AL	4-70 mm² CU
d)	50-120 mm² AL	10-95 mm² CU

Used for branch conductor

Comment

C14

SEALING CAP 0.6/1 KV, according to Chapter F (Technical Specification)

Conductor section

a) 50 mm²

b) 95 mm²

c) 120 mm²

Used for protection cables LV

Comment

I1

SUSPENSION INSULATOR, porcelain, ball and socket according to Chapter Q (Technical Specification)

	Disc diameter	Spacing	Mechanical failing load
a)	175 mm	110 mm	40 kN

Used for support conductor Medium Voltage

I2

PIN TYPE INSULATOR, porcelain according to Chapter Q (Technical Specification)

	Dimensions		Mechanical
	Diameter	Height	cantilever load
a)	238 mm	158 mm	20 kN

Used for support conductor Medium Voltage

C15

WEDGE TYPE TENSION CLAMP, for ACSR conductor without current loop according to Chapter Q (Technical Specification)

	Conductor size	Overall diameter
a)	70/12 mm²	11.5 mm
b)	120/20 mm²	15.5 mm
c)	185/30 mm²	19.0 mm

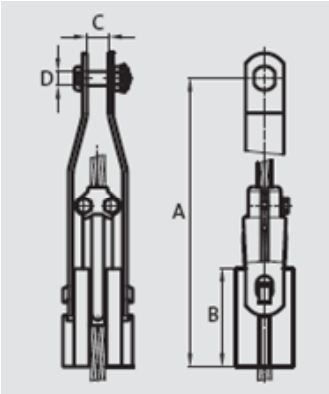

Used for support conductor ACSR

Comment

C16

WEDGE TYPE TENSION CLAMP, for ACSR conductor with current loop according to Chapter Q (Technical Specification)

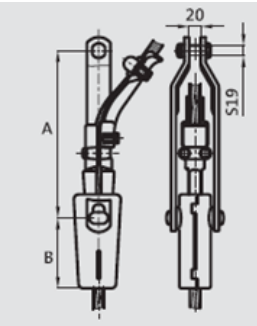

	Conductor size	Overall diameter
a)	70/12 mm²	11.5 mm
b)	120/20 mm²	15.5 mm
c)	185/30 mm²	19.0 mm

Used for support conductor ACSR

B4

BALL CLEVIS, galvanized steel for suspension insulator I1 according to Chapter Q (Technical Specification)

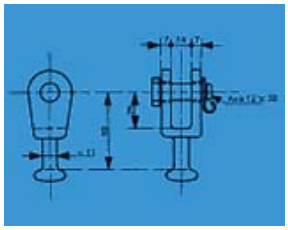

	Minimum Breaking strength
a)	130 kN

Used for support conductor ACSR

N3

EYE NUT, galvanized steel according to Chapter Q (Technical Specification)

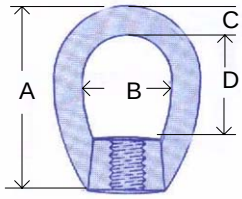

	For bolt Diameter	Minimum Breaking strength
a)	M16	130 kN

Used for support conductor ACSR

E1

SOCKET EYE STRAIGHT, galvanized steel for suspension insulator I1 according to Chapter Q (Technical Specification)

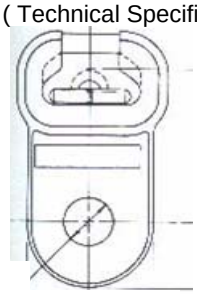

	Minimum Breaking strength
a)	130 kN

Used for support conductor ACSR

Comment

P1

POLE TOP PIN, galvanized pressed steel for pin type insulator I2 according to Chapter Q (Technical Specification)

	Dimensions				
	L	H	S	Hole diameter	Slotted hole
a)	500 mm	280 mm	200 mm	18 mm	18 mm x 32 mm

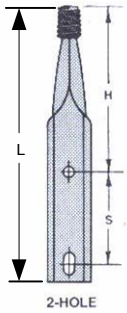

Used for support conductor on pole Medium Voltage

P2

SHORT SHANK PIN, galvanized forged steel with nut and spring lock washer included for pole top insulator I2 according to Chapter Q (Technical Specification)

	Dimensions			
	A	B	C	Shank diameter
a)	180 mm	40 mm	75 mm	M20

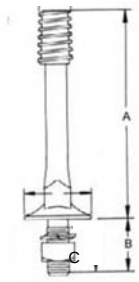

Used for support conductor on cross arm Medium Voltage

P3

OFFSET POLE TOP PIN, galvanized pressed steel for pin type insulator I2 according to Chapter Q (Technical Specification)

	Dimensions				
	L	A	B	S	Hole diameter
a)	550 mm	110 mm	300 mm	200 mm	18 mm

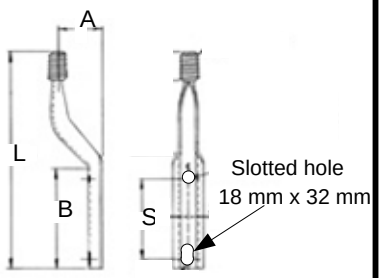

Used for support conductor on pole Medium Voltage

P4

DOUBLE ARMING PLATE, hot dip galvanized short shank pin P2 according to Chapter Q (Technical Specification)

	Dimensions				
	L	A	B	C	Hole diameter
a)	600 mm	370 mm	50 mm	100 mm	22 mm

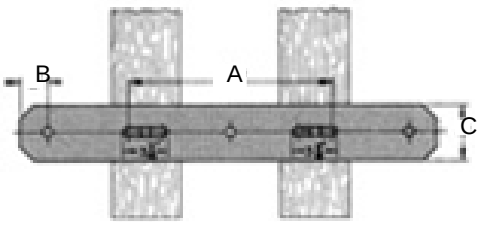

Used for mounting short shank insulator pin

Comment

A1

SURGE ARRESTER, type gapless, grey, silicon rubber, insulated bracket according to Chapter P (Technical Specification)

	Rated max. operating voltage	Rated continuous operating voltage	Rated discharge current (peak)	Rated frequency
a)	24 kV	19 kV	10 kA	50 Hz

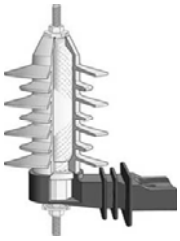

Used for overvoltage protection

B1

DOUBLE ARMING BOLT , metric thread, 4 hexagonal nut, galvanized steel according to Chapter B (Technical Specification)

	Dimensions		Minimum
	Diameter	Length	Breaking strength
a)	M16	250 mm	55 kN
b)	M16	300 mm	55 kN
c)	M16	350 mm	55 kN
d)	M16	400 mm	55 kN
e)	M20	300 mm	80 kN
f)	M20	350 mm	80 kN
g)	M16	500 mm	55 kN
h)	M16	550 mm	55 kN

Used for assemblies double cross arm

B2

MACHINE BOLT, metric thread, hexagonal head and nut, galvanized steel according to Chapter B (Technical Specification)

	Dimensions		Minimum
	Diameter	Length	Breaking strength
a)	M10	50 mm	19 kN
b)	M10	125 mm	19 kN
c)	M12	50 mm	35 kN
d)	M12	150 mm	35 kN
e)	M12	250 mm	35 kN
f)	M12	300 mm	35 kN
g)	M16	200 mm	55 kN
h)	M16	250 mm	55 kN
i)	M16	300 mm	55 kN
j)	M20	250 mm	80 kN
k)	M20	300 mm	80 kN
l)	M20	350 mm	80 kN
m)	M20	50 mm	80 kN
n)	M12	475 mm	35 kN
o)	M12	525 mm	35 kN

Used for assemblies single cross arm, pole top pin

Comment

B5

BUCKLE FOR STRAPS, stainless steel according to Chapter B (Technical Specification)

	Dimensions L
a)	21 mm

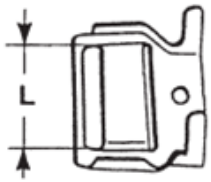

Use with straps S8

Used for attach cables protection

C17

COPPER CONDUCTOR, stranded according to Chapter S (Technical Specification)

	Conductor size	Overall diameter
a)	25 mm²	6.40 mm
b)	35 mm²	7.60 mm

Used for earthing electrical system

C18

GROUND ROD CLAMP, copper bonded according to Chapter S (Technical Specification)

	Rod diameter	Conductor range
a)	12 mm	25 mm²
b)	16 mm	35 mm²

Used for connect earthwire to the ground rod

C19

GROUND STUD CONNECTOR (SPLIT BOLT), copper bonded according to Chapter S (Technical Specification)

	Stud diameter	Conductor range
a)	12 mm	25 mm²
b)	12 mm	35 mm²

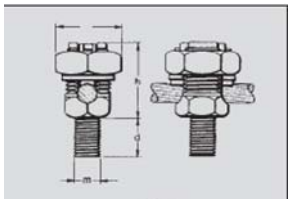

Used for connect ground lug pole inside to external ground

Comment

G1

GROUND WIRE MOLDING GUARD, plastic, grey color according to Chapter B (Technical Specification)

	Dimension	
	a	Length
a)	12 mm	2400 mm

Used for protecting of ground wire

R1

GROUND ROD, copper bonded according to Chapter S (Technical Specification)

	Dimensions	
	Diameter	Length
a)	12 mm	1500 mm
b)	16 mm	1800 mm

Used for connect earthwire to the ground

S7

STRAP, hot dip galvanized, include plastic anchor and slotted hex head with washer head screw according to Chapter B (Technical Specification)

	For guard	Anchor and slotted length
a)	12 mm	25 mm

strap

Slotted

Anchor

Used for protecting ground wire

S8

STRAPS, stainless steel according to Chapter B (Technical Specification)

	Dimensions	Breaking strength
a)	20 mm x 0.4 mm	70 daN/mm²

Used for attach cables protection

Comment

S9

FACADE SADDLES , include a plastic support, a plastic plug, a standard plastic tie and galvanized steel according to Chapter B (Technical Specification)

For cable size

a) ABC 3 x 120 mm² + 1 x 70 mm²

Used to install LV insulated overhead line on a building

W1

ROUND WASHER , galvanized steel according to Chapter B (Technical Specification)

	For Bolt Diameter	Outside Diameter	Thickness
a)	M12	35 mm	6 mm
b)	M16	45 mm	6 mm
c)	M20	50 mm	6 mm

Used for miscellaneous assemblies

W2

SQUARE WASHER , galvanized steel according to Chapter B (Technical Specification)

	For Bolt Diameter	Size
a)	M10	50 mm x 50 mm x 3mm
b)	M12	60 mm x 60 mm x 8 mm
c)	M16	75 mm x 75 mm x 8 mm
d)	M20	100 mm x 100 mm x 10 mm

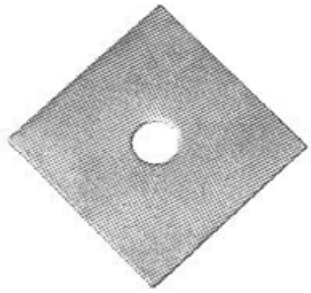

Used for miscellaneous assemblies

W3

SPRING LOCK WASHER , galvanized steel according to Chapter B (Technical Specification)

	For Bolt Diameter	Inside diameter Min.	Inside diameter Max.
a)	M10	10.5 mm	10.7 mm
b)	M12	12.7 mm	13.0 mm
c)	M16	16.9 mm	17.3 mm
d)	M20	20.1 mm	20.7 mm

Used for keep a bolt-nut in tension

Comment

AS-01	**SINGLE CROSSARM STEEL (2000 mm)**
AS-02	**SINGLE CROSSARM STEEL (3200 mm)**
AS-03	**DOUBLE CROSSARM STEEL (2000 mm)**
AS-04	**DOUBLE CROSSARM STEEL (3200 mm)**
AS-05	**SINGLE SUPPORT ON CROSSARM (TANGENT)**
AS-06	**DOUBLE SUPPORT ON CROSSARM (ANGLE)**
AS-07	**SINGLE SUPPORT ON TOP POLE**
AS-08	**DOUBLE SUPPORT ON TOP POLE**
AS-09	**DEADEND ON CROSSARM**
AS-10	**DEADEND ON POLE**

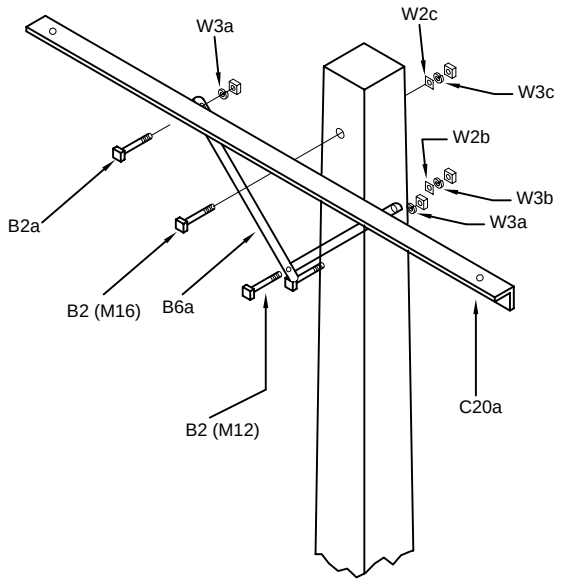

NO.	QT.	DESCRIPTION	CODE
B2a	2	MACHINE BOLT, METRIC THREAD, HEXAGONAL HEAD AND NUT M10 x 50 mm	
B2	1	MACHINE BOLT, METRIC THREAD, HEXAGONAL HEAD AND NUT M12 x REQ`D LENGTH	
B2	1	MACHINE BOLT, METRIC THREAD, HEXAGONAL HEAD AND NUT M16 x REQ`D LENGTH	
B6a	2	FLAT CROSSARM BRACE 40 mm X 8 mm, LENGTH 760 mm	
C20a	1	STEEL CROSSARM 70 mm X 70 mm X 7 mm, LENGTH 2000 mm	
W2b	1	SQUARE WASHER, 60 mm X 60 mm X 8 mm, FOR BOLT M12	
W2c	1	SQUARE WASHER, 75 mm X 75 mm X 8 mm, FOR BOLT M16	
W3a	2	SPRING LOCK WASHER, FOR BOLT M10	
W3b	1	SPRING LOCK WASHER, FOR BOLT M12	
W3c	1	SPRING LOCK WASHER, FOR BOLT M16	

Ministry of Water and Power
decon DEUTSCHE ENERGIE-CONSULT INGENIEURGESELLSCHAFT mbH

MWP

Rehabilitation and Extension of Kabul City Distribution Network

Single crossarm steel (2000 mm)
Miscellaneous assemblies MV

Date: January, 2005 | Revision: 1 | Scale: Without

Drawing:

U **AS-01**

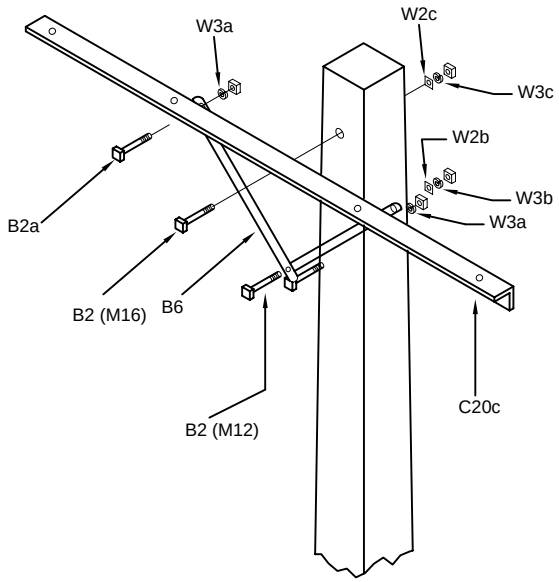

NO.	QT.	DESCRIPTION	CODE
B2a	2	MACHINE BOLT, METRIC THREAD, HEXAGONAL HEAD AND NUT M10 x 50 mm	
B2	1	MACHINE BOLT, METRIC THREAD, HEXAGONAL HEAD AND NUT M12 x REQ`D LENGTH	
B2	1	MACHINE BOLT, METRIC THREAD, HEXAGONAL HEAD AND NUT M16 x REQ`D LENGTH	
B6b	2	FLAT CROSSARM BRACE 40 mm X 8 mm, LENGTH 1000 mm	
C20c	1	STEEL CROSSARM 70 mm X 70 mm X 7 mm, LENGTH 3200 mm	
W2b	1	SQUARE WASHER, 60 mm X 60 mm X 8 mm, FOR BOLT M12	
W2c	1	SQUARE WASHER, 75 mm X 75 mm X 8 mm, FOR BOLT M16	
W3a	2	SPRING LOCK WASHER, FOR BOLT M10	
W3b	1	SPRING LOCK WASHER, FOR BOLT M12	
W3c	1	SPRING LOCK WASHER, FOR BOLT M16	

Ministry of Water and Power
decon DEUTSCHE ENERGIE-CONSULT INGENIEURGESELLSCHAFT mbH

Rehabilitation and Extension of Kabul City Distribution Network

Single crossarm steel (3200 mm)
Miscellaneous assemblies MV

Date: January, 2005 | Revision: 1 | Scale: Without

Drawing: **U** **AS-02**

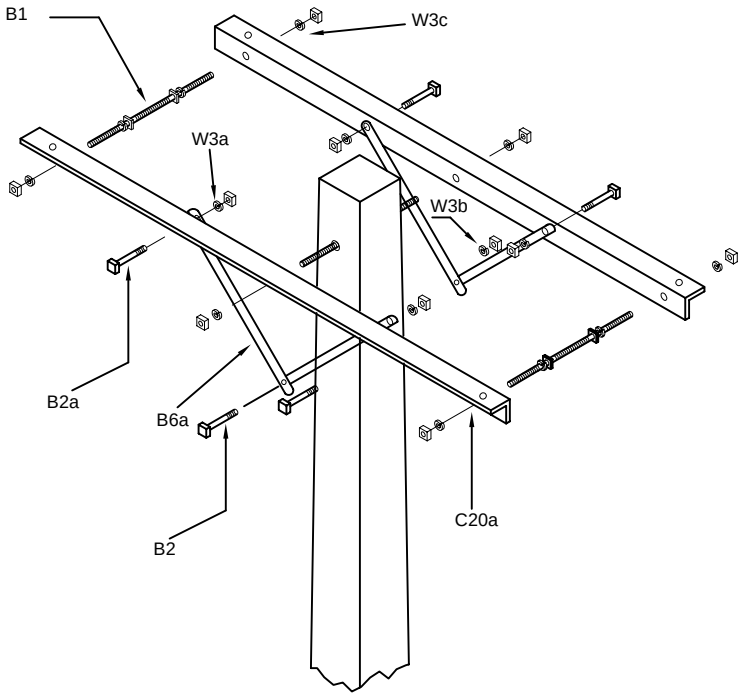

NO.	QT.	DESCRIPTION	CODE
B1	3	DOUBLE ARMING BOLT, METRIC THREAD, 4 HEXAGONAL NUT M16 x REQ`D LENGTH	
B2a	4	MACHINE BOLT, METRIC THREAD, HEXAGONAL HEAD AND NUT M10 x 50 mm	
B2	1	MACHINE BOLT, METRIC THREAD, HEXAGONAL HEAD AND NUT M12 x REQ`D LENGTH	
B6a	4	FLAT CROSSARM BRACE 40 mm X 8 mm, LENGTH 760 mm	
C20a	2	STEEL CROSSARM 70 mm X 70 mm X 7 mm, LENGTH 2000 mm	
W3a	4	SPRING LOCK WASHER, FOR BOLT M10	
W3b	1	SPRING LOCK WASHER, FOR BOLT M12	
W3c	10	SPRING LOCK WASHER, FOR BOLT M16	

Ministry of Water and Power
decon DEUTSCHE ENERGIE-CONSULT INGENIEURGESELLSCHAFT mbH

MWP

Rehabilitation and Extension of Kabul City Distribution Network

Double crossarm steel (2000 mm)
Miscellaneous assemblies MV

Date: January, 2005 | Revision: 1 | Scale: Without

Drawing:

U | **AS-03**

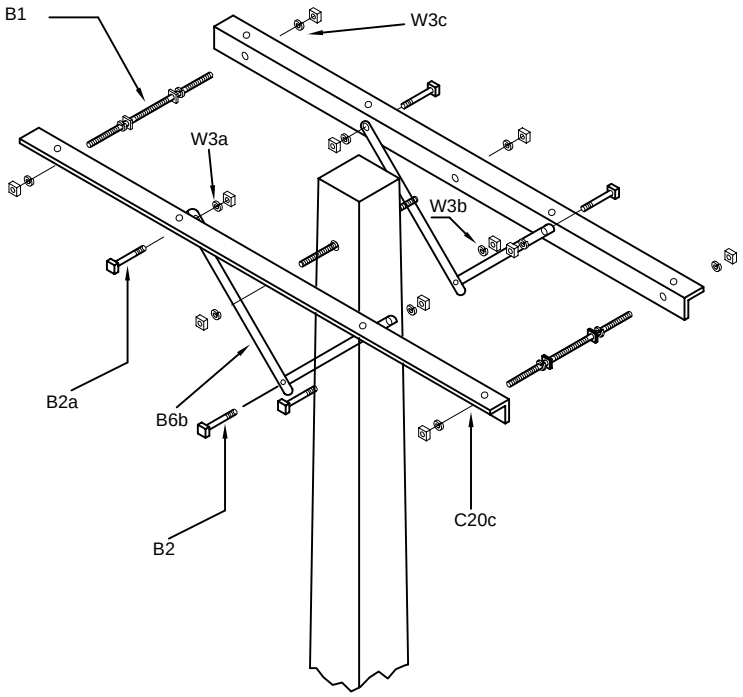

NO.	QT.	DESCRIPTION	CODE
B1	3	DOUBLE ARMING BOLT, METRIC THREAD, 4 HEXAGONAL NUT M16 x REQ`D LENGTH	
B2a	4	MACHINE BOLT, METRIC THREAD, HEXAGONAL HEAD AND NUT M10 x 50 mm	
B2	1	MACHINE BOLT, METRIC THREAD, HEXAGONAL HEAD AND NUT M12 x REQ`D LENGTH	
B6b	4	FLAT CROSSARM BRACE 40 mm X 8 mm, LENGTH 1000 mm	
C20c	2	STEEL CROSSARM 70 mm X 70 mm X 7 mm, LENGTH 3200 mm	
W3a	4	SPRING LOCK WASHER, FOR BOLT M10	
W3b	1	SPRING LOCK WASHER, FOR BOLT M12	
W3c	10	SPRING LOCK WASHER, FOR BOLT M16	

Ministry of Water and Power
decon DEUTSCHE ENERGIE-CONSULT INGENIEURGESELLSCHAFT mbH

Rehabilitation and Extension of Kabul City Distribution Network

Double crossarm steel (3200 mm)
Miscellaneous assemblies MV

Date: January, 2005 | Revision: 1 | Scale: Without

Drawing: U **AS-04**

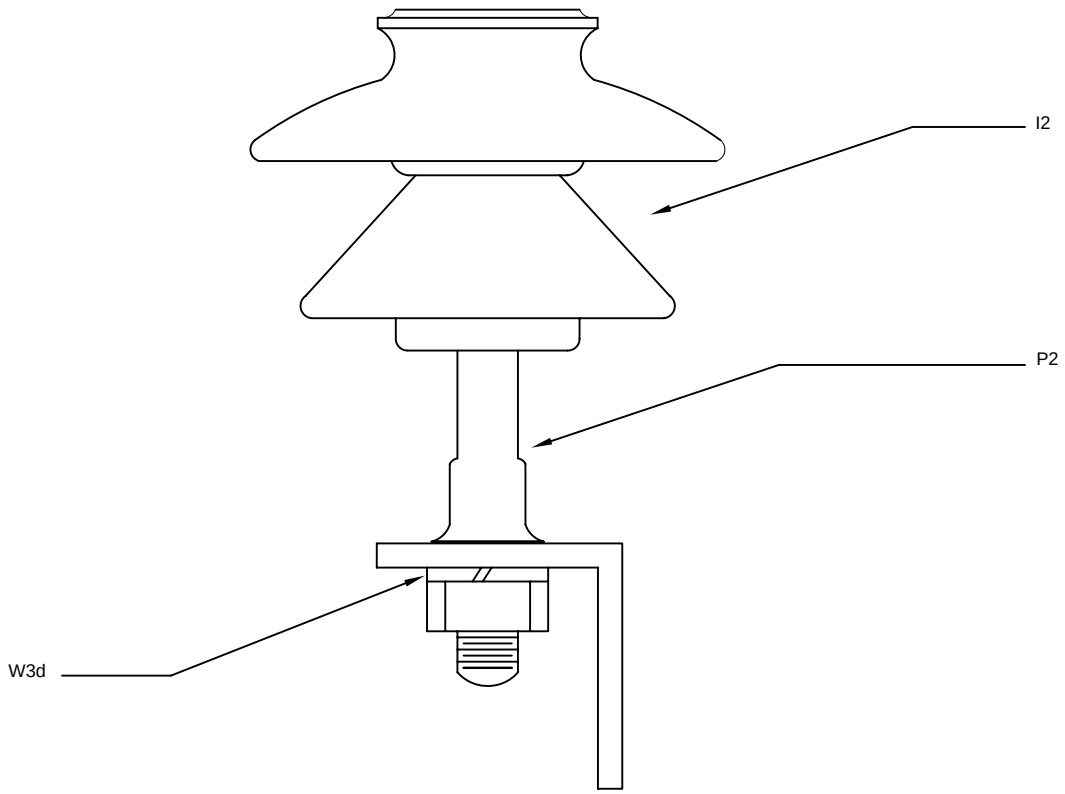

NO.	QT.	DESCRIPTION	CODE
I2	1	PIN TYPE INSULATOR, 238 mm (DIAMETER) X 158 mm (HEIGHT)	
P2	1	SHORT SHANK PIN, FOR POLE TOP INSULATOR I2	
W3d	1	SPRING LOCK WASHER, FOR BOLT M20	

Ministry of Water and Power
decon DEUTSCHE ENERGIE-CONSULT INGENIEURGESELLSCHAFT mbH

MWP

Rehabilitation and Extension of Kabul City Distribution Network

Single support on crossarm (tangent)
Miscellaneous assemblies MV

Date: January, 2005 | Revision: 1 | Scale: Without

Drawing: **U** **AS-05**

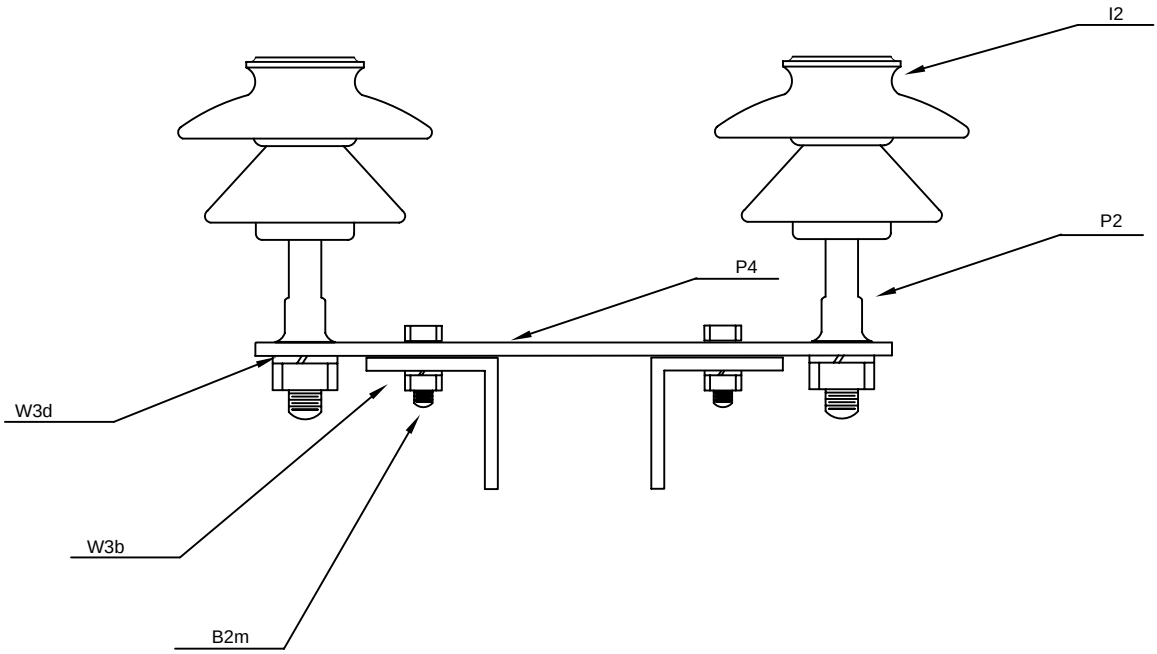

NO.	QT.	DESCRIPTION	CODE
B2m	2	MACHINE BOLT, METRIC THREAD, HEXAGONAL HEAD AND NUT M20 x 50 mm	
I2	2	PIN TYPE INSULATOR, 238 mm (DIAMETER) X 158 mm (HEIGHT)	
P2	2	SHORT SHANK PIN, FOR POLE TOP INSULATOR I2	
P4	1	DOUBLE ARMING PLATE, FOR SHORT SHANK PIN P2	
W3d	4	SPRING LOCK WASHER, FOR BOLT M20	

Ministry of Water and Power
decon DEUTSCHE ENERGIE-CONSULT INGENIEURGESELLSCHAFT mbH

MWP

Rehabilitation and Extension of Kabul City Distribution Network

Double support on crossarm (angle)
Miscellaneous assemblies MV

Date: January, 2005 | Revision: 1 | Scale: Without

Drawing: **U** **AS-06**

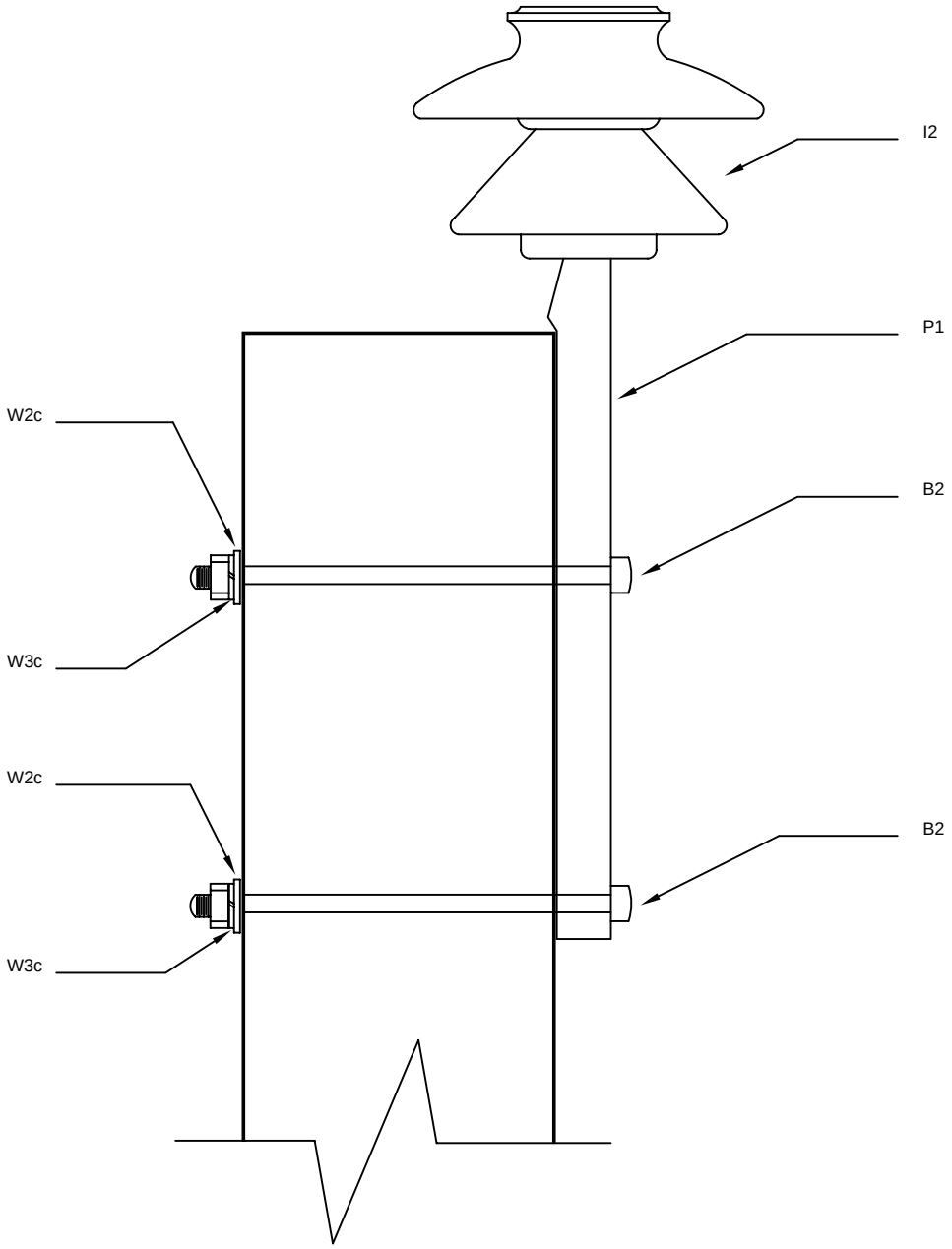

NO.	QT.	DESCRIPTION	CODE
B2	2	MACHINE BOLT, METRIC THREAD, HEXAGONAL HEAD AND NUT M16 x REQ`D LENGTH	
I2	1	PIN TYPE INSULATOR, 238 mm (DIAMETER) X 158 mm (HEIGHT)	
P1	1	POLE TOP PIN, 500 mm X 280 mm X 200 mm	
W2c	2	SQUARE WASHER, 75 mm X 75 mm X 8 mm, FOR BOLT M16	
W3c	2	SPRING LOCK WASHER, FOR BOLT M16	

Ministry of Water and Power
decon DEUTSCHE ENERGIE-CONSULT INGENIEURGESELLSCHAFT mbH

Rehabilitation and Extension of Kabul City Distribution Network

Single support on top pole
Miscellaneous assemblies MV

Date: January, 2005 | Revision: 1 | Scale: Without

Drawing: U **AS-07**

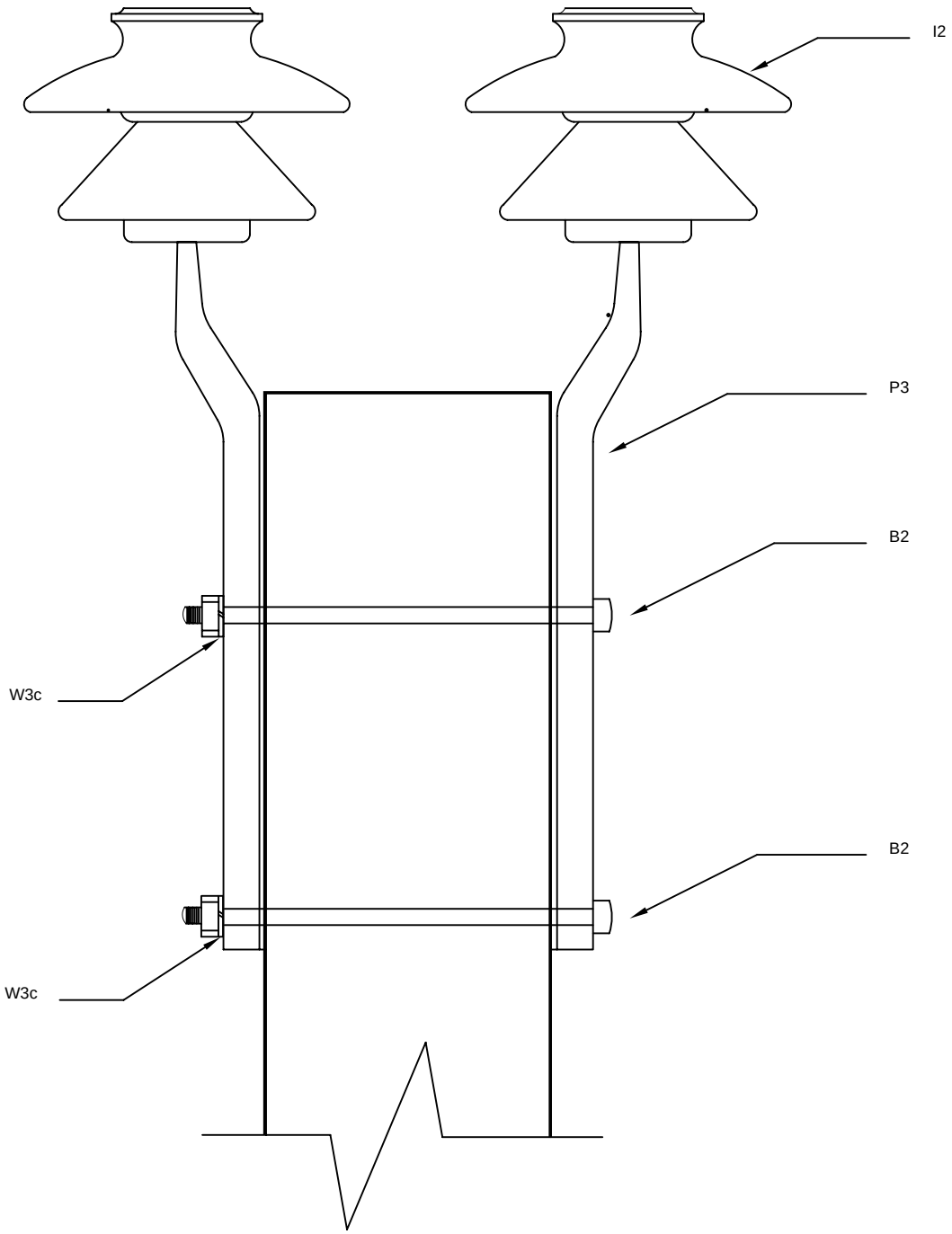

NO.	QT.	DESCRIPTION	CODE
B2	2	MACHINE BOLT, METRIC THREAD, HEXAGONAL HEAD AND NUT M16 x REQ`D LENGTH	
I2	2	PIN TYPE INSULATOR, 238 mm (DIAMETER) X 158 mm (HEIGHT)	
P3	2	OFFSET POLE TOP PIN, 550 mm X 110 mm X 200 mm	
W3c	2	SPRING LOCK WASHER, FOR BOLT M16	

Ministry of Water and Power
decon DEUTSCHE ENERGIE-CONSULT INGENIEURGESELLSCHAFT mbH

Rehabilitation and Extension of Kabul City Distribution Network

Double support on top pole
Miscellaneous assemblies MV

Date: January, 2005 | Revision: 1 | Scale: Without

Drawing: **U** **AS-08**

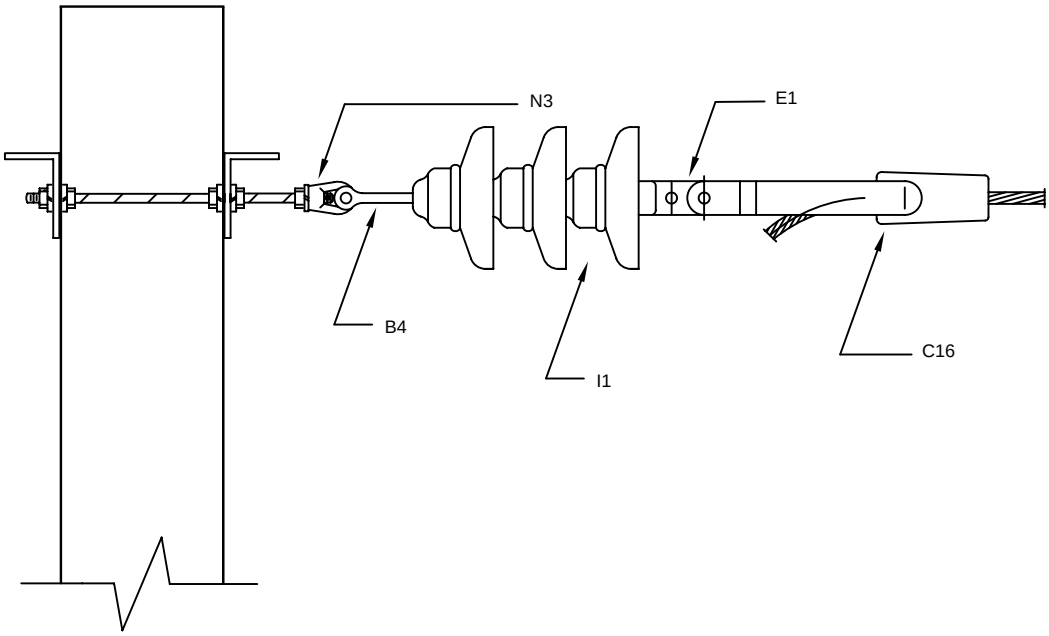

NO.	QT.	DESCRIPTION	CODE
B4	1	BALL CLEVIS, FOR SUSPENSION INSULATOR I1	
C16	1	WEDGE TYPE TENSION CLAMP, FOR ACSR CONDUCTOR	
E1	1	SOCKET EYE STRAIGHT, FOR SUSPENSION INSULATOR I1	
I1	3	SUSPENSION INSULATOR, BALL AND SOCKET 175 mm (DISC. DIAMETER) X 110 mm (SPACING)	
N3	1	EYE NUT, FOR BOLT M16	

Ministry of Water and Power
decon DEUTSCHE ENERGIE-CONSULT INGENIEURGESELLSCHAFT mbH

Rehabilitation and Extension of Kabul City Distribution Network

Deadend on crossarm
Miscellaneous assemblies MV

Date: January, 2005 | Revision: 1 | Scale: Without

Drawing: **U** **AS-09**

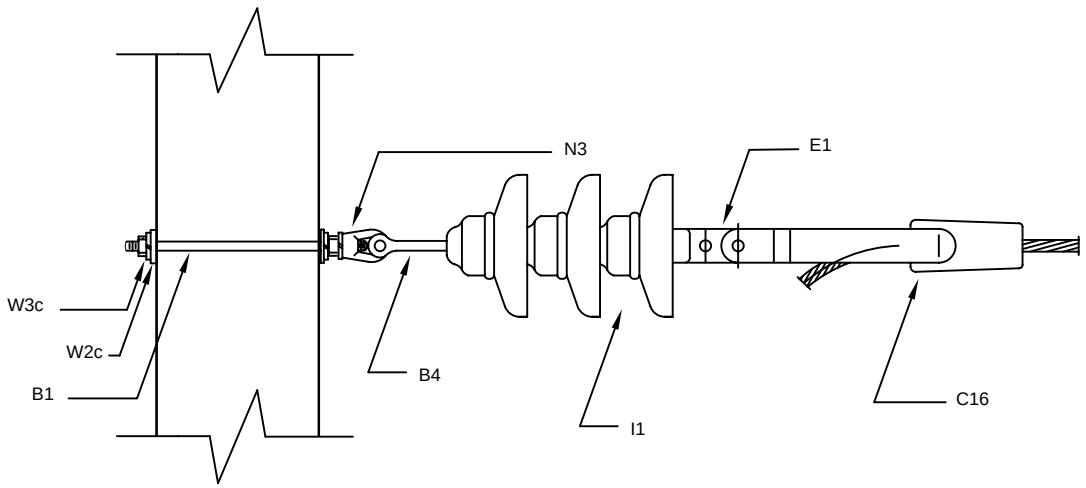

NO.	QT.	DESCRIPTION	CODE
B1	1	DOUBLE ARMING BOLT, METRIC THREAD, 4 HEXAGONAL NUT M16 x REQ`D LENGTH	
B4	1	BALL CLEVIS, FOR SUSPENSION INSULATOR I1	
C16	1	WEDGE TYPE TENSION CLAMP, FOR ACSR CONDUCTOR	
E1	1	SOCKET EYE STRAIGHT, FOR SUSPENSION INSULATOR I1	
I1	3	SUSPENSION INSULATOR, BALL AND SOCKET 175 mm (DISC. DIAMETER) X 110 mm (SPACING)	
N3	1	EYE NUT, FOR BOLT M16	
W2c	2	SQUARE WASHER, 75 mm X 75 mm X 8 mm, FOR BOLT M16	
W3c	2	SPRING LOCK WASHER, FOR BOLT M16	

Ministry of Water and Power
decon DEUTSCHE ENERGIE-CONSULT INGENIEURGESELLSCHAFT mbH

Rehabilitation and Extension of Kabul City Distribution Network

Deadend on pole
Miscellaneous assemblies MV

Date: January, 2005 | Revision: 1 | Scale: Without

Drawing: U **AS-10**

MV-301C	SINGLE SUPPORT ON CROSSARM, 3 PHASE 24.9/14.4 KV
MV-302C	DOUBLE SUPPORT ON CROSSARM (ANGLE 5° TO 15°), 3 PHASE 24.9/14.4 KV
MV-303C	DEADEND ANGLE (60° - 90°), 3 PHASE 24.9/14.4 KV
MV-304C	SINGLE SUPPORT ON CROSSARM WITH TAP GUIDE, 3 PHASE 24.9/14.4 KV
MV-305C	SINGLE DEADEND ON CROSSARM, 3 PHASE 24.9/14.4 KV
MV-306C	DOUBLE DEADEND ON CROSSARM, 3 PHASE 24.9/14.4 KV
MV-307C	DEADEND ON CROSSARM (angle 60º - 90º), 3 PHASE 24.9/14.4 KV
MV-601C	SINGLE SUPPORT ON CROSSARM, DOUBLE CIRCUIT 24.9/14.4 KV
MV-602C	DOUBLE SUPPORT ON CROSSARM, DOUBLE CIRCUIT 24.9/14.4 KV
MV-603C	DEADEND ANGLE (60° - 90°), DOUBLE CIRCUIT 24.9/14.4 KV
MV-604C	SINGLE SUPPORT ON CROSSARM WITH TAP GUIDE, DOUBLE CIRCUIT 24.9/14.4 KV
MV-605C	SINGLE DEADEND ON CROSSARM, DOUBLE CIRCUIT 24.9/14.4 KV
MV-606C	DOUBLE DEADEND ON CROSSARM, DOUBLE CIRCUIT 24.9/14.4 KV
F-01	Foundation for Medium Voltage
T-01	Pole mounted transformer

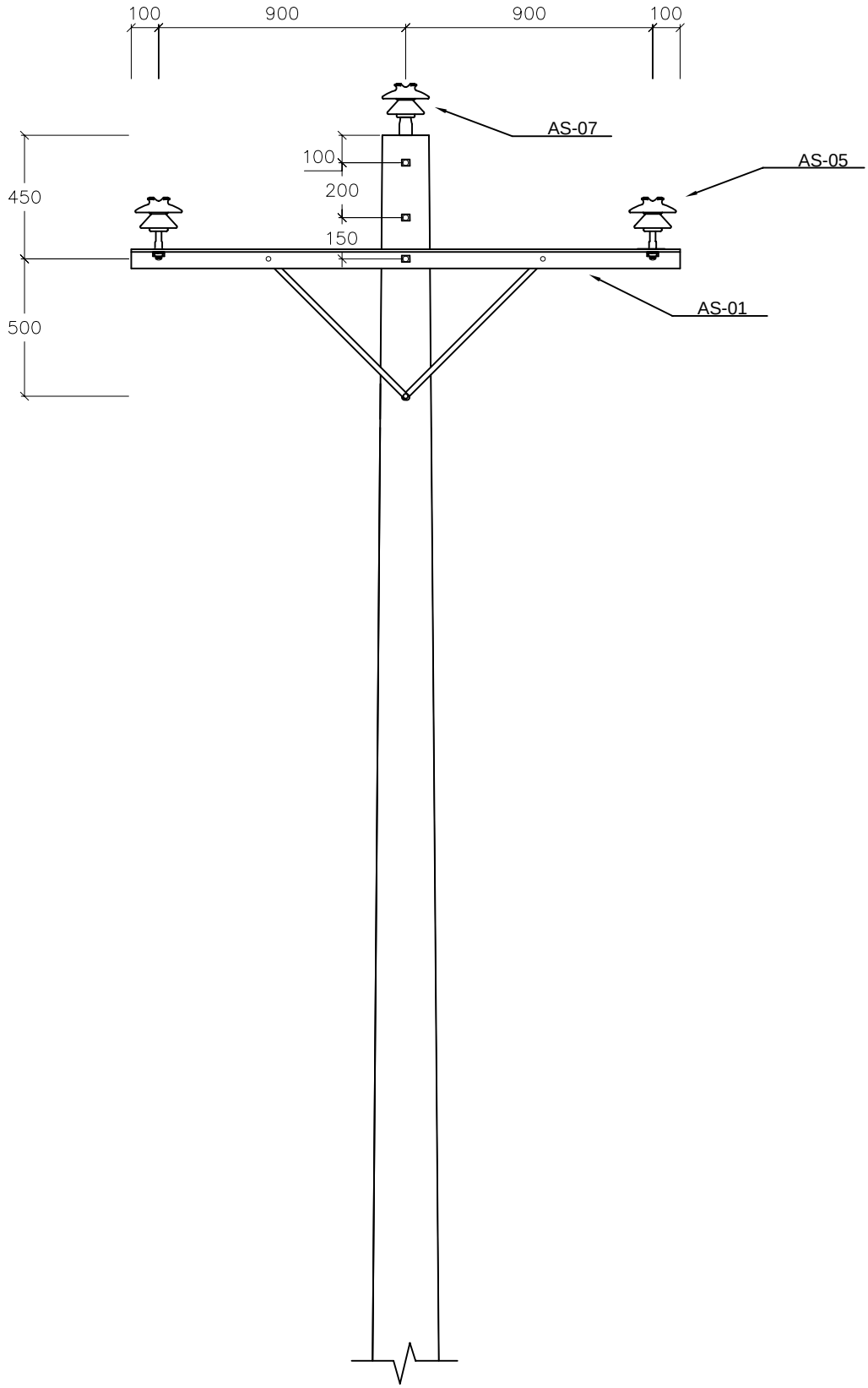

Ministry of Water and Power decon DEUTSCHE ENERGIE-CONSULT INGENIEURGESELLSCHAFT mbH	Single support on crossarm 3 phase, 24.9/14.4 kV		Drawing:
Rehabilitation and Extension of Kabul City Distribution Network	Date: January, 2005	Revision: 1	Scale: Without	U	**MV-301C**

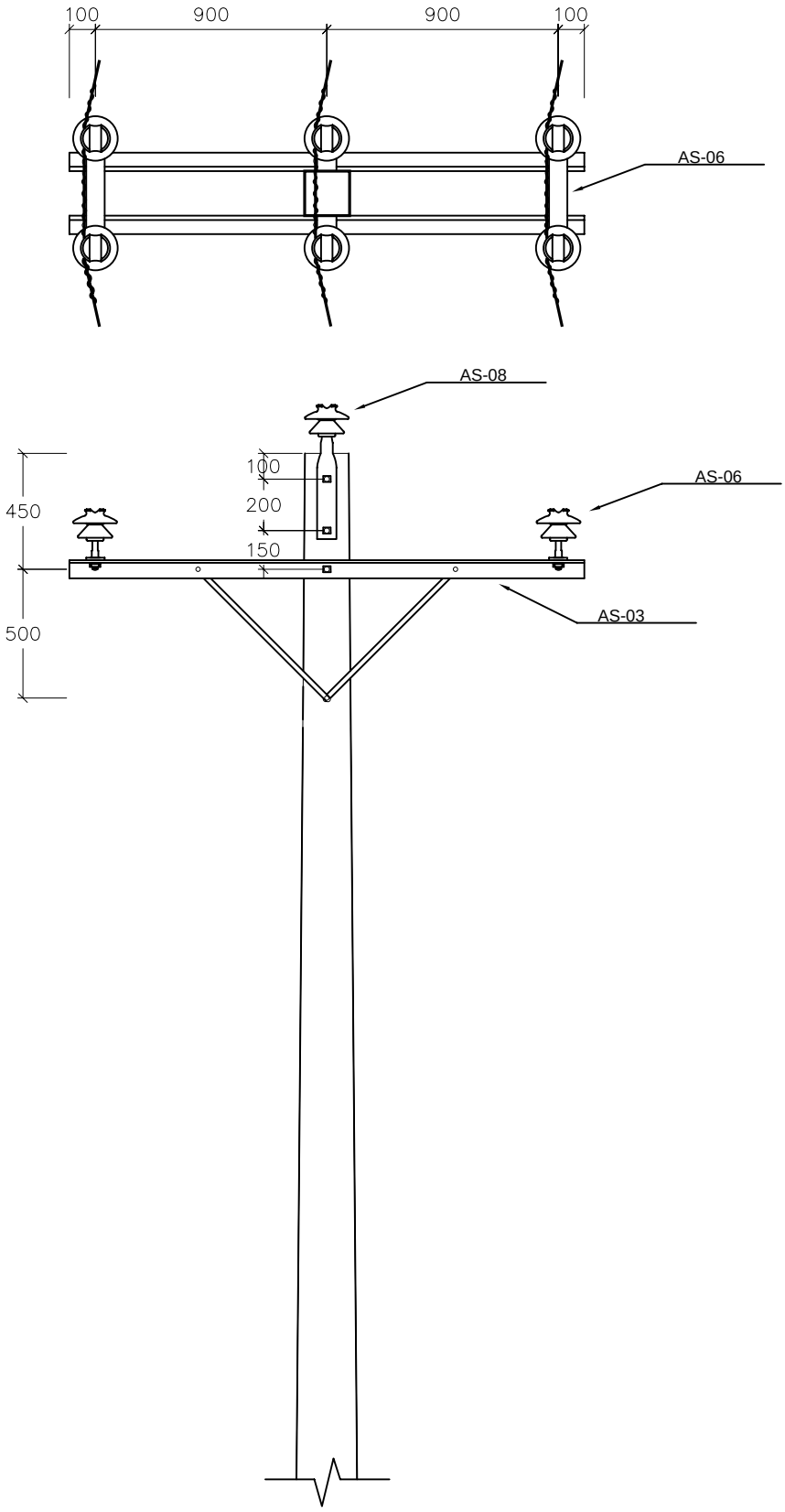

Ministry of Water and Power decon DEUTSCHE ENERGIE-CONSULT INGENIEURGESELLSCHAFT mbH	Double support on crossarm (angle 5°-15°) 3 phase, 24.9/14.4 kV			Drawing:
Rehabilitation and Extension of Kabul City Distribution Network	Date: January, 2005	Revision: 1	Scale: Without	U **MV-302C**

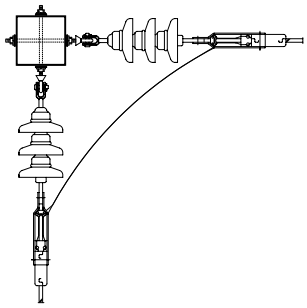

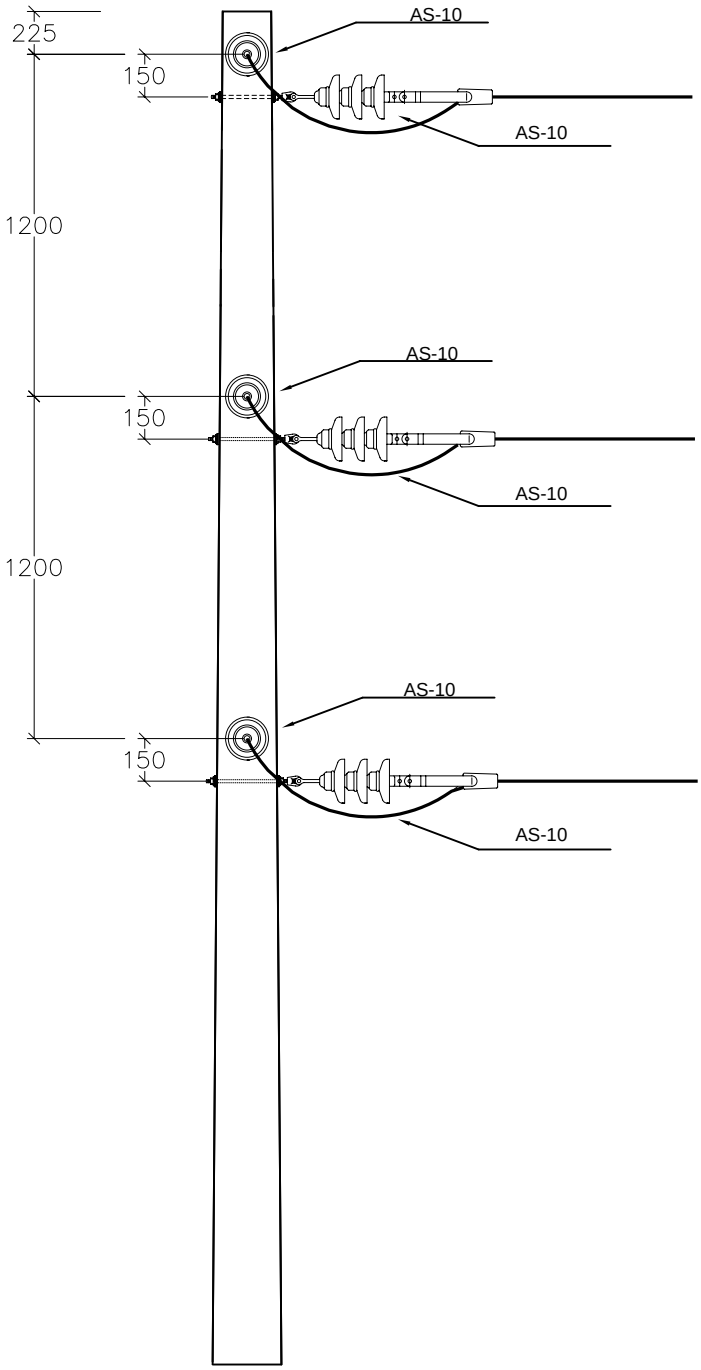

Ministry of Water and Power decon DEUTSCHE ENERGIE-CONSULT INGENIEURGESELLSCHAFT mbH	Deadend (angle 60°-90°) 3 phase, 24.9/14.4 kV			Drawing:
Rehabilitation and Extension of Kabul City Distribution Network	Date: January, 2005	Revision: 1	Scale: Without	U **MV-303C**

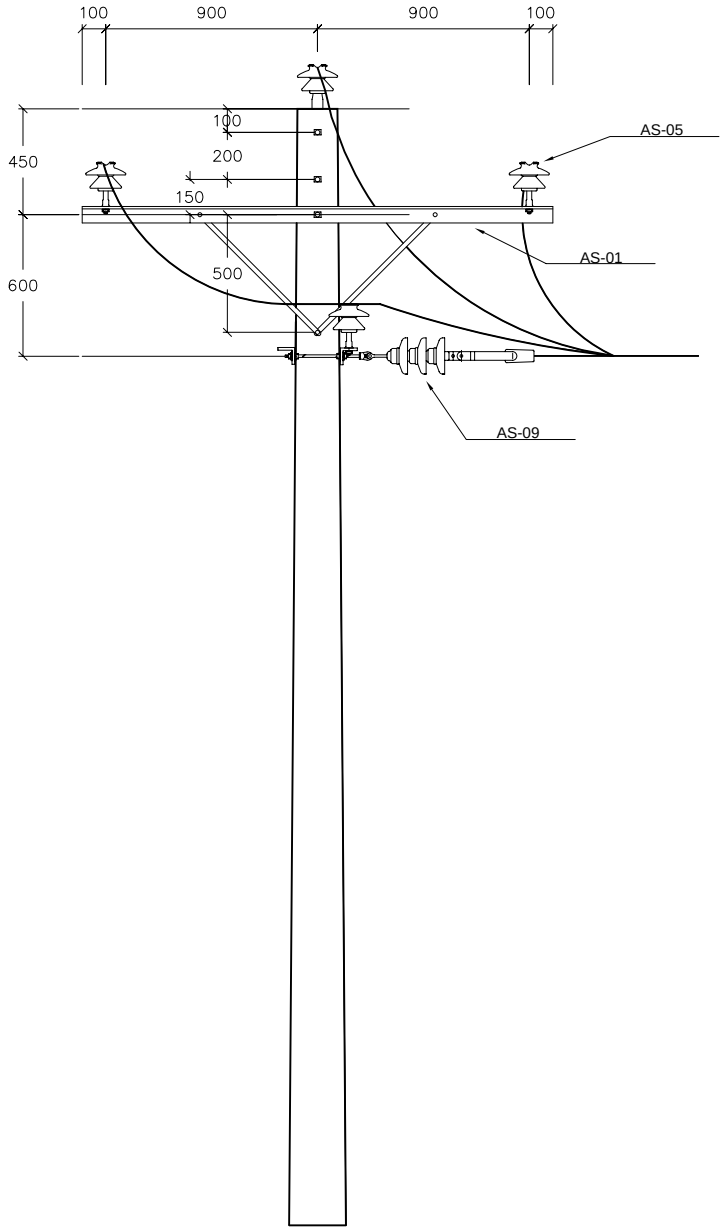

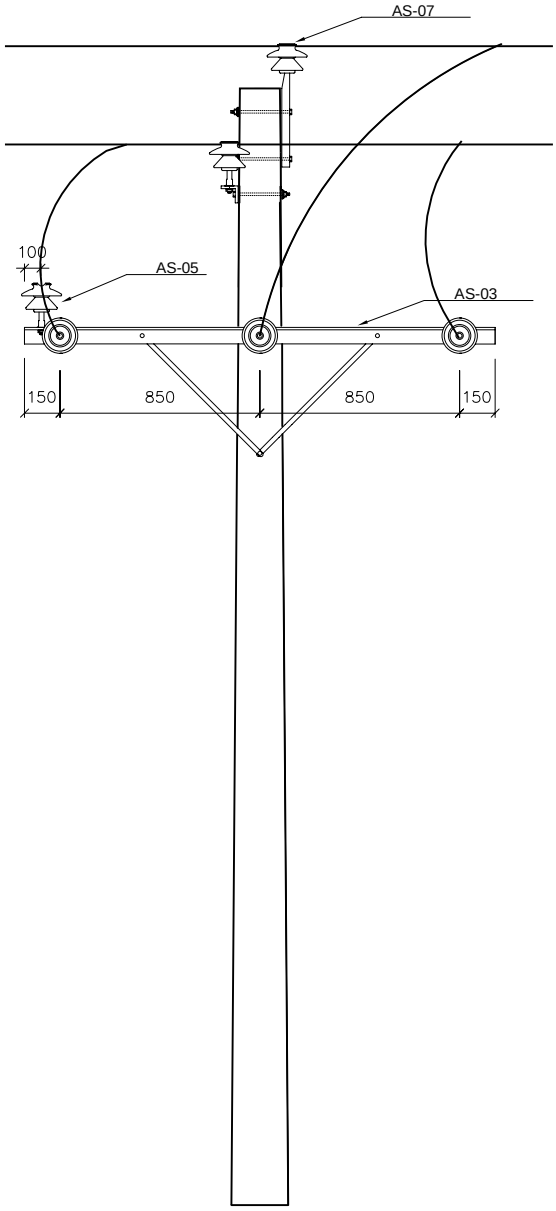

Ministry of Water and Power decon DEUTSCHE ENERGIE-CONSULT INGENIEURGESELLSCHAFT mbH	Single support on crossarm with tap guide 3 phase, 24.9/14.4 kV		Drawing:
Rehabilitation and Extension of Kabul City Distribution Network	Date: January, 2005	Revision: 1	Scale: Without	U	**MV-304C**

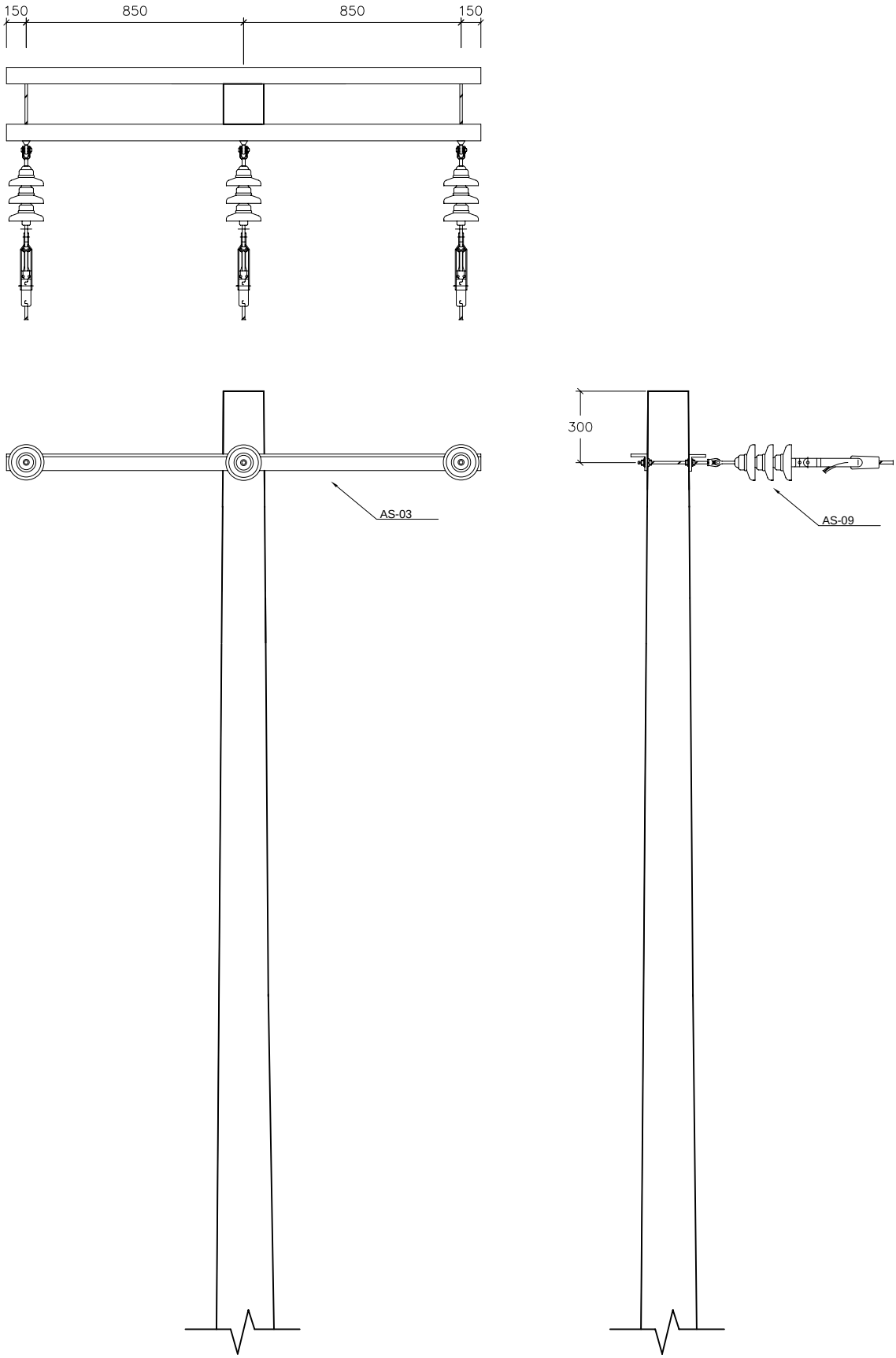

Ministry of Water and Power

decon DEUTSCHE ENERGIE-CONSULT INGENIEURGESELLSCHAFT mbH

MWP

Rehabilitation and Extension of Kabul City Distribution Network

Single deadend on crossarm
3 phase, 24.9/14.4 kV

Drawing:

Date: January, 2005 | Revision: 1 | Scale: Without

U

MV-305C

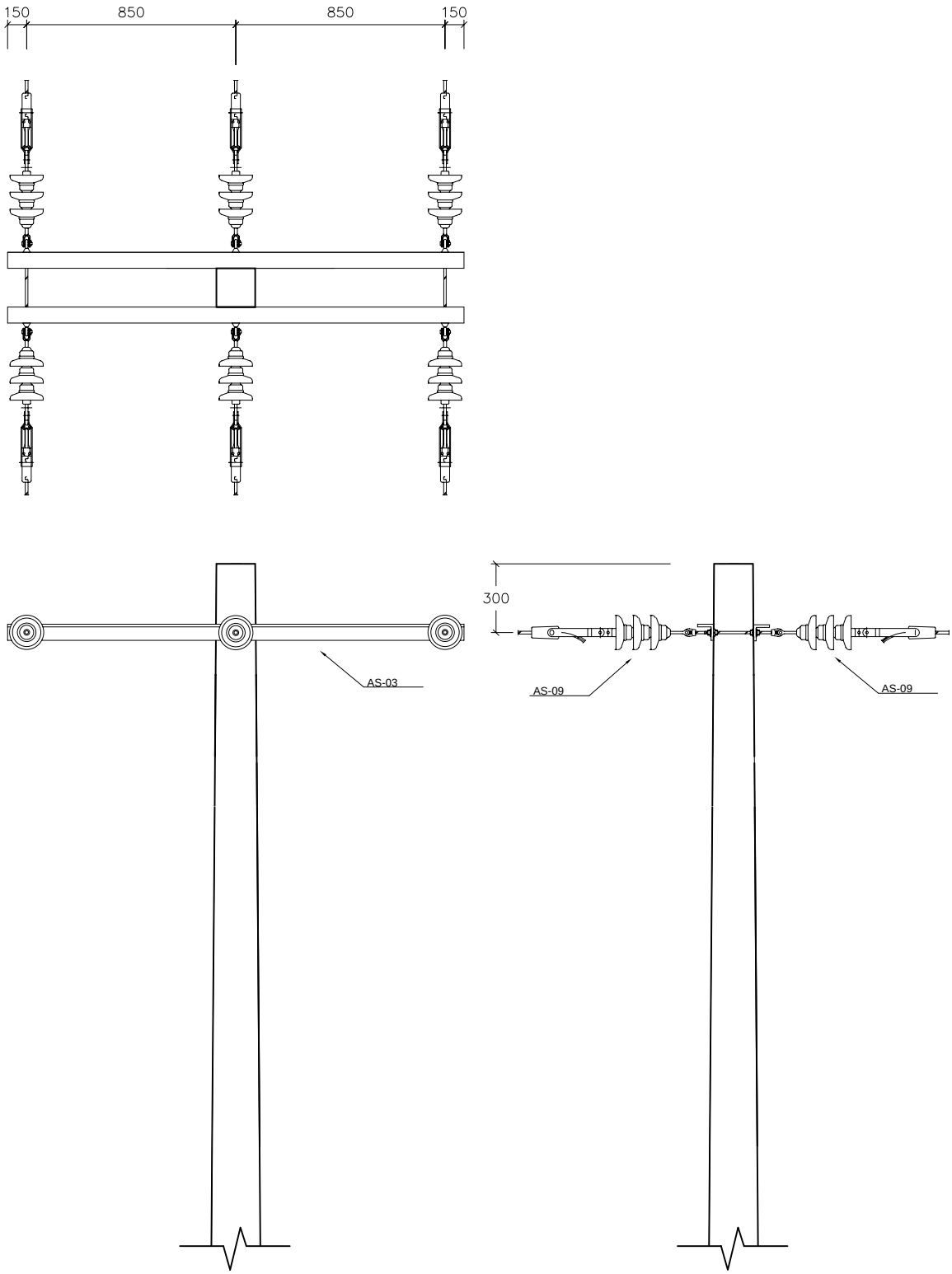

Ministry of Water and Power decon DEUTSCHE ENERGIE-CONSULT INGENIEURGESELLSCHAFT mbH	Double deadend on crossarm 3 phase, 24.9/14.4 kV			Drawing:
Rehabilitation and Extension of Kabul City Distribution Network	Date: January, 2005	Revision: 1	Scale: Without	U **MV-306C**

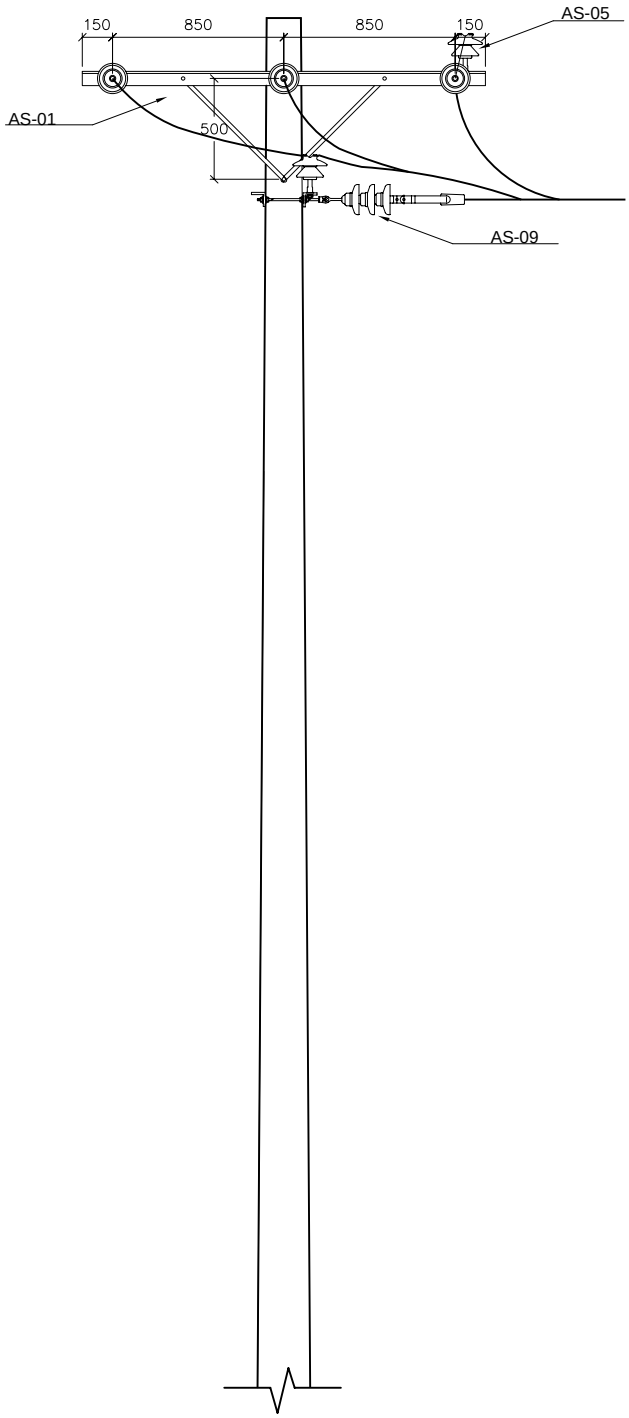

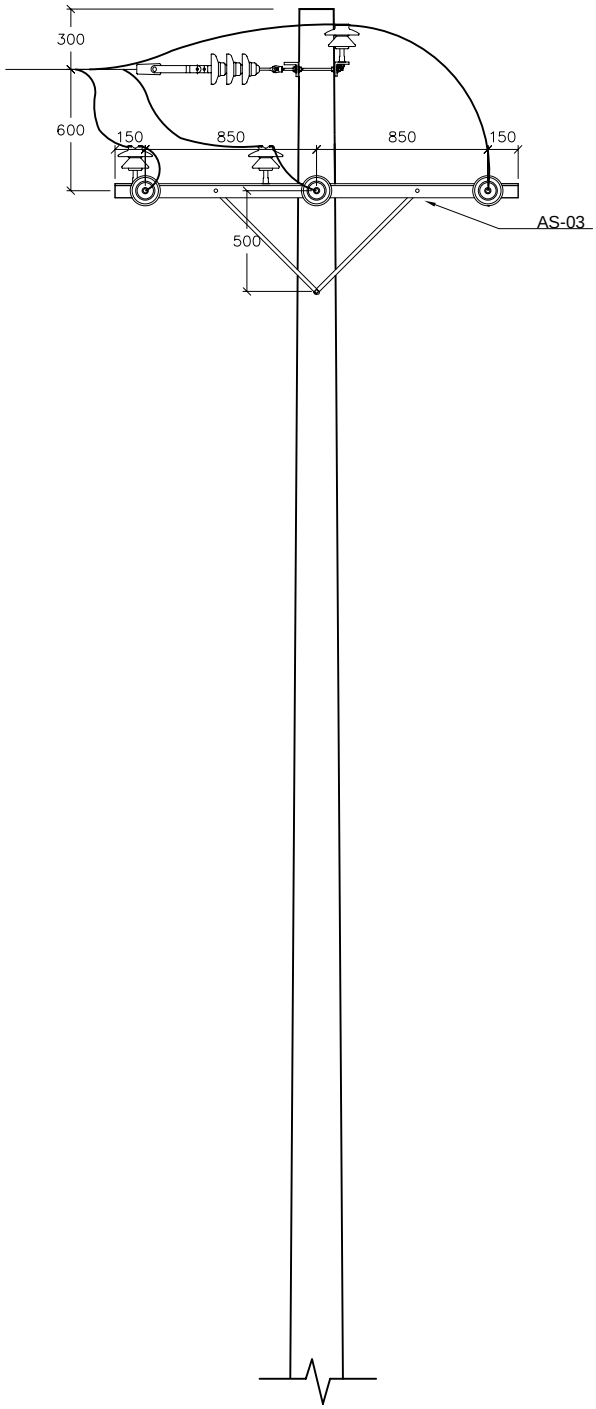

Ministry of Water and Power decon DEUTSCHE ENERGIE-CONSULT INGENIEURGESELLSCHAFT mbH	Deadend on crossarm (angle 60°-90°) 3 phase, 24.9/14.4 kV		Drawing:
Rehabilitation and Extension of Kabul City Distribution Network	Date: January, 2005	Revision: 1	Scale: Without	U	**MV-307C**

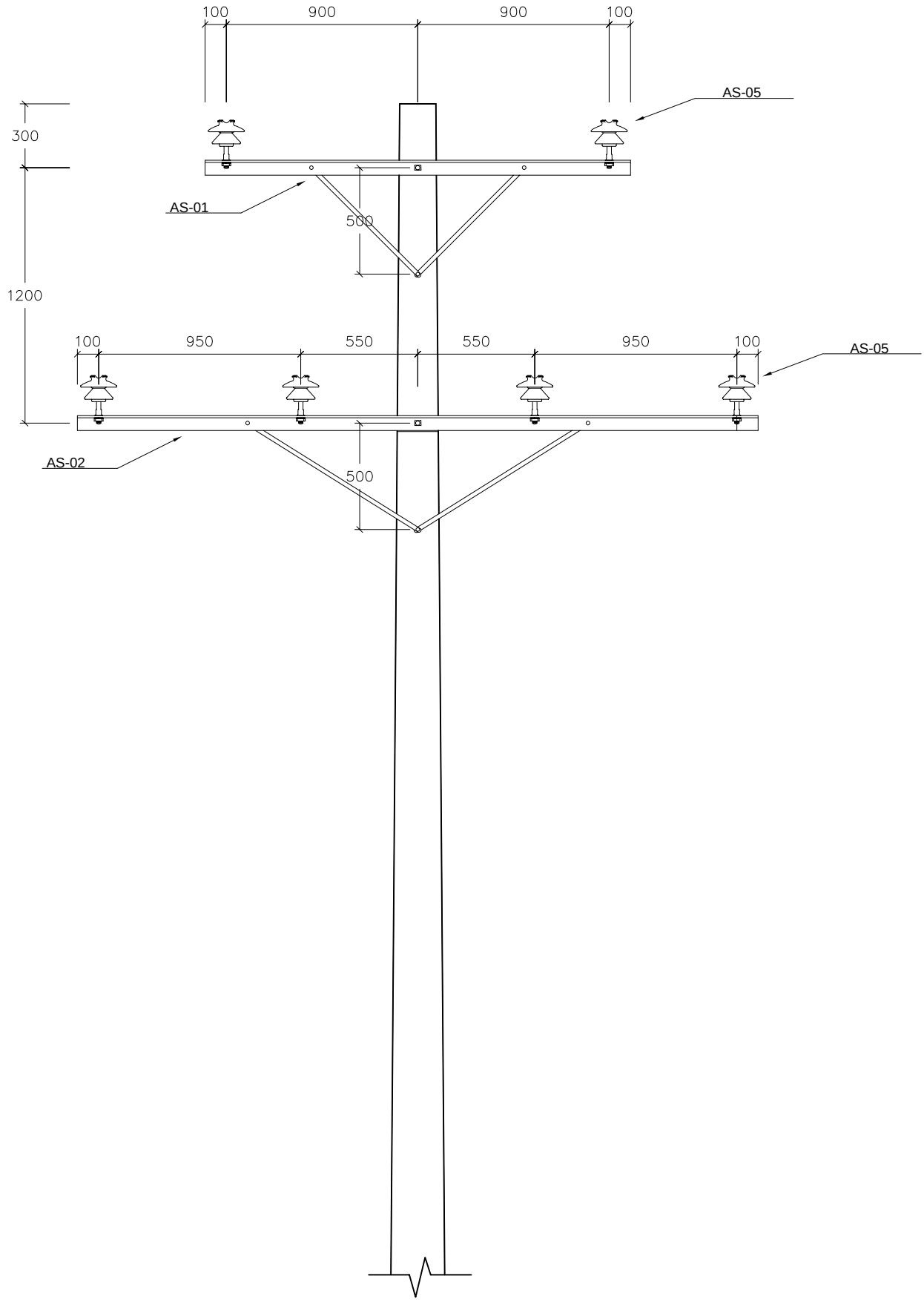

Ministry of Water and Power
decon DEUTSCHE ENERGIE-CONSULT INGENIEURGESELLSCHAFT mbH

Rehabilitation and Extension of Kabul City Distribution Network

Single support on crossarm double circuit, 24.9/14.4 kV

Date: January, 2005 | Revision: 1 | Scale: Without

Drawing: U MV-601C

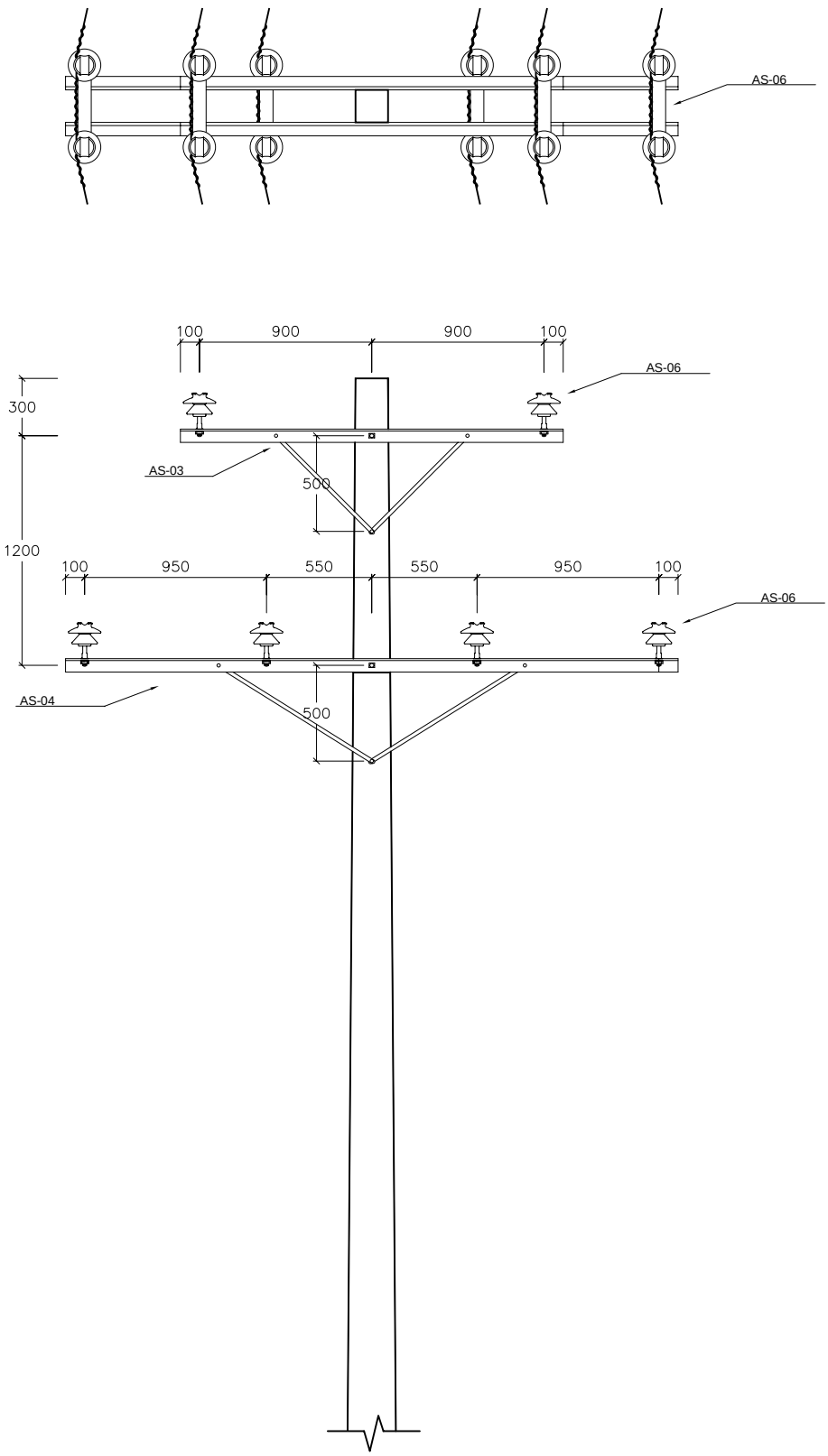

Ministry of Water and Power decon DEUTSCHE ENERGIE-CONSULT INGENIEURGESELLSCHAFT mbH	Double support on crossarm (angle 5°-15°) double circuit, 24.9/14.4 kV		Drawing:
Rehabilitation and Extension of Kabul City Distribution Network	Date: January, 2005	Revision: 1	Scale: Without	U	**MV-602C**

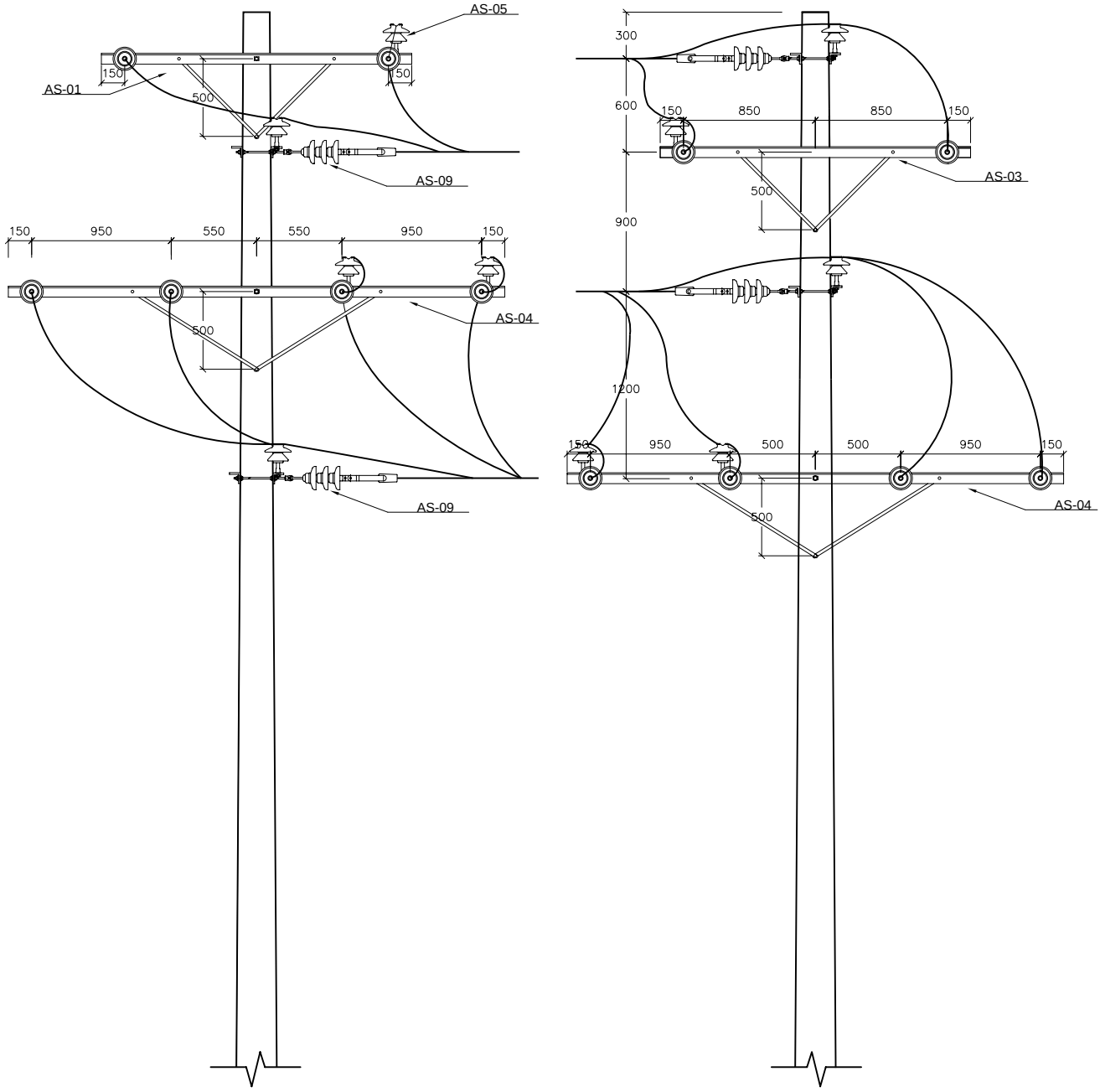

Ministry of Water and Power decon DEUTSCHE ENERGIE-CONSULT INGENIEURGESELLSCHAFT mbH	Deadend on crossarm (angle 60°-90°) double circuit, 24.9/14.4 kV		Drawing:
Rehabilitation and Extension of Kabul City Distribution Network	Date: January, 2005	Revision: 1	Scale: Without	U	MV-603C

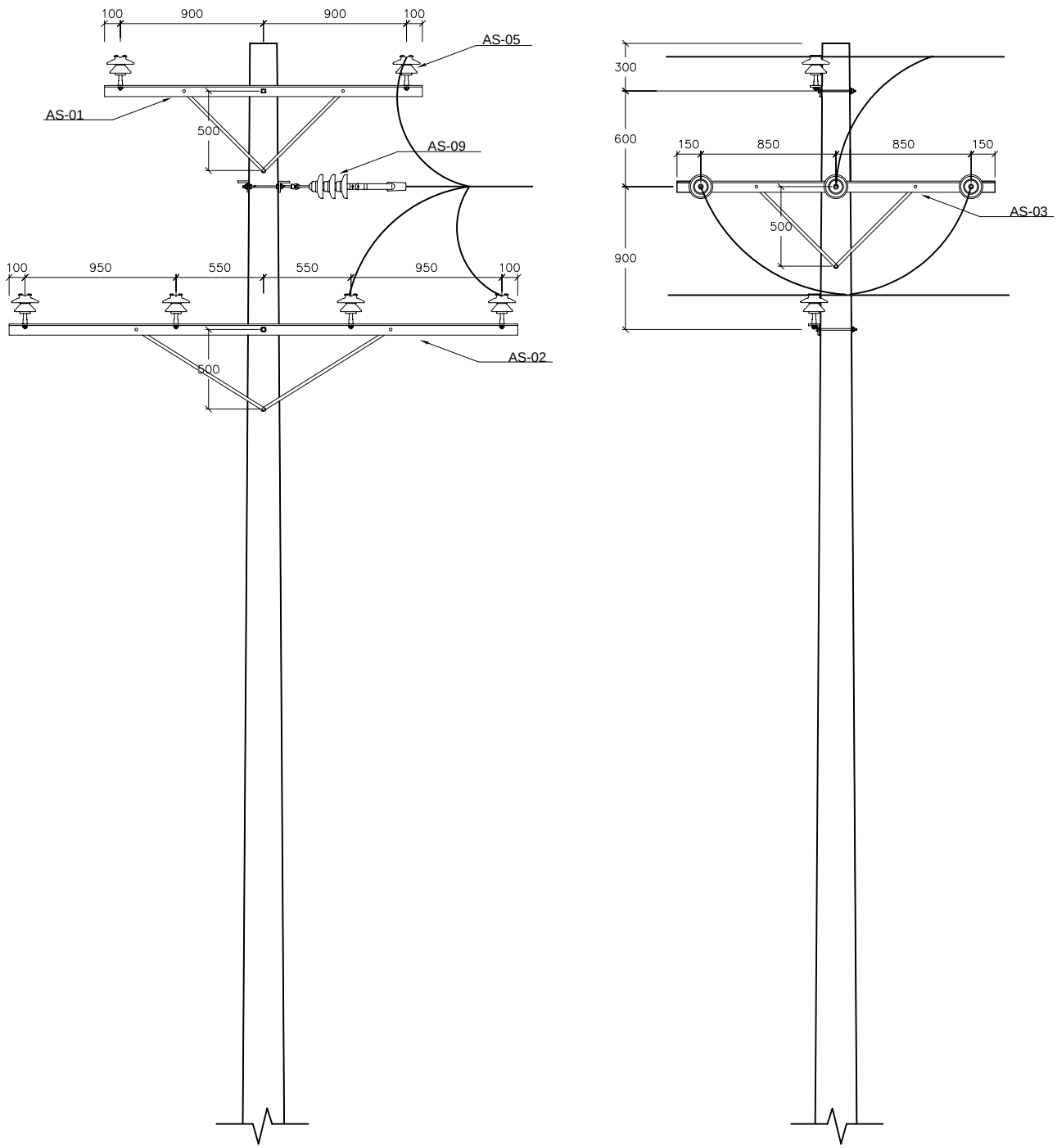

Note: This arrangement shall exclusively be used in exceptional cases, subject to the project managers approval. Wherever possible two individual poles

Ministry of Water and Power decon DEUTSCHE ENERGIE-CONSULT INGENIEURGESELLSCHAFT mbH	Single support on crossarm with tap guide double circuit, 24.9/14.4 kV		Drawing:
Rehabilitation and Extension of Kabul City Distribution Network	Date: January, 2005	Revision: 1	Scale: Without	U	**MV-604C**

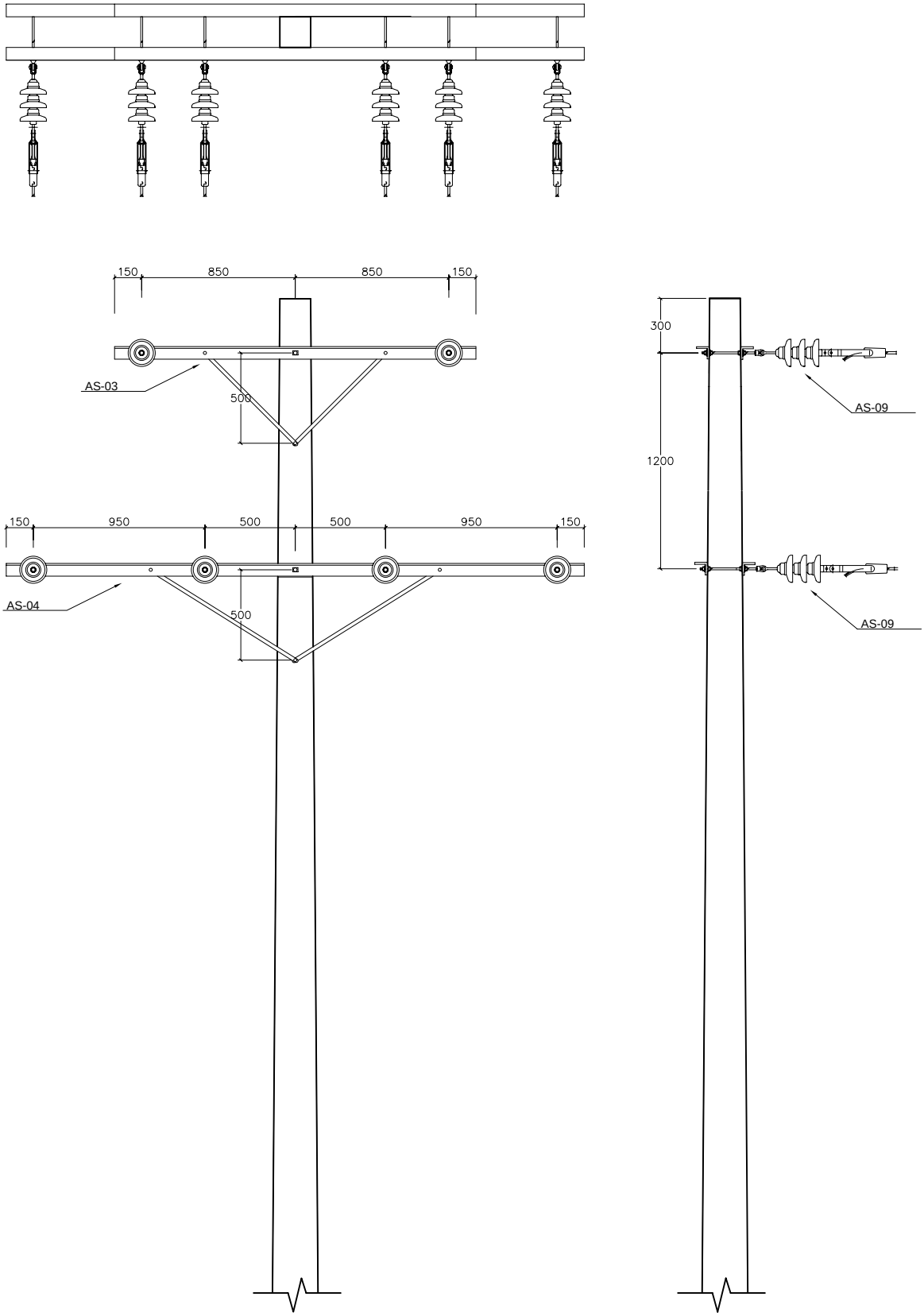

Ministry of Water and Power
decon DEUTSCHE ENERGIE-CONSULT INGENIEURGESELLSCHAFT mbH

Rehabilitation and Extension of Kabul City Distribution Network

Single deadend on crossarm double circuit, 24.9/14.4 kV

Date: January, 2005 | Revision: 1 | Scale: Without

Drawing: U MV-605C

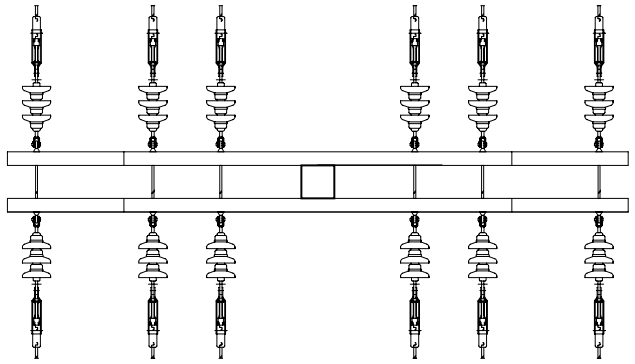

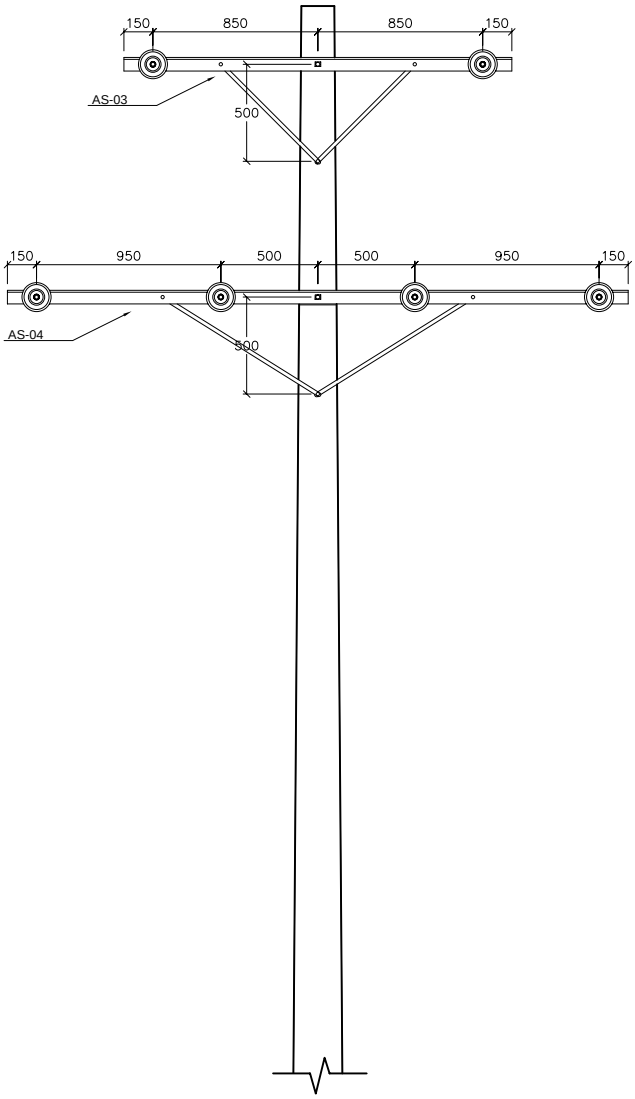

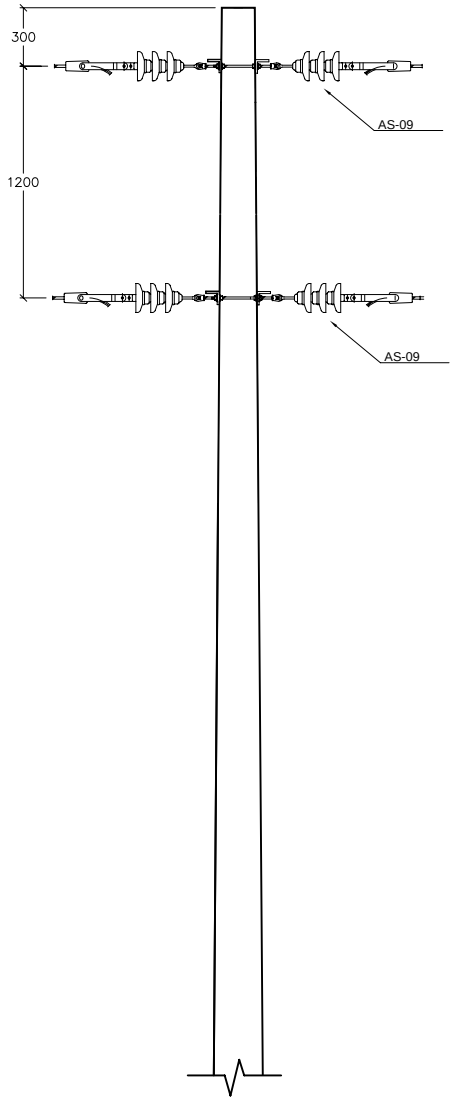

Ministry of Water and Power decon DEUTSCHE ENERGIE-CONSULT INGENIEURGESELLSCHAFT mbH	Double deadend on crossarm double circuit, 24.9/14.4 kV		Drawing:
Rehabilitation and Extension of Kabul City Distribution Network	Date: January, 2005	Revision: 1	Scale: Without	U	**MV-606C**

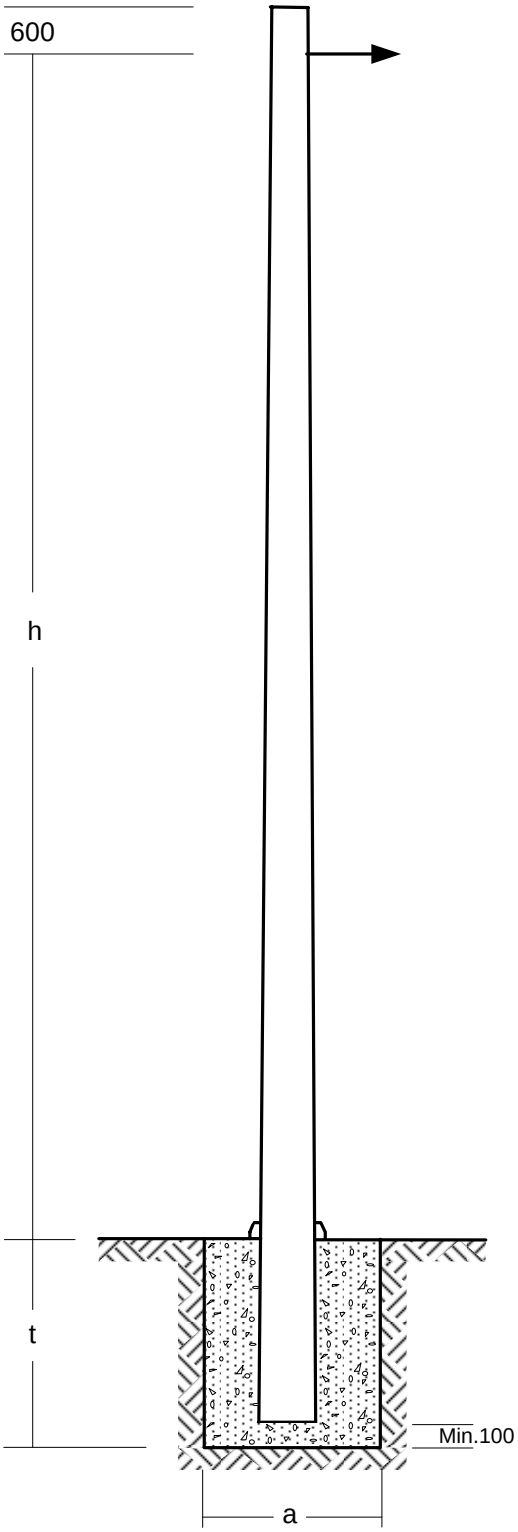

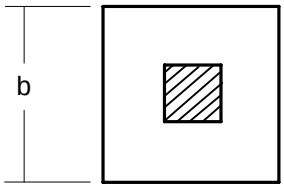

FOUNDATION DIMENSION REFERENCE FOR 12 METER CONCRET POLE

Configuration	h (mm)	t (mm)	a (mm)	b (mm)
Double circuit, conductor 185/30 mm²				
Angle 0°	--	--	--	--
Angle 10°	9600	1900	600	600
Angle 15°	9500	2000	700	700
Angle 30°	9200	2300	900	900
Angle 45°	9000	2500	1000	1000
Angle 60°	8900	2600	1200	1200
Deadend	9100	2400	1000	1500
Single circuit, conductor 185/30 mm²				
Angle 0°	--	--	--	--
Angle 10°	9600	1900	700	700
Angle 15°	9600	1900	700	700
Angle 30°	9400	2100	700	700
Angle 45°	9400	2100	1000	1000
Angle 60°	9200	2300	1000	1000
Deadend	9400	2100	900	1200
Double circuit, conductor 120/20 mm²				
Angle 0°	--	--	--	--
Angle 10°	9600	1900	600	600
Angle 15°	9500	2000	600	600
Angle 30°	9300	2200	900	900
Angle 45°	9200	2300	1200	1200
Angle 60°	9100	2400	1300	1300
Deadend	9100	2400	1000	1300
Single circuit, conductor 120/20 mm²				
Angle 0°	--	--	--	--
Angle 10°	--	--	--	--
Angle 15°	9600	1900	500	500
Angle 30°	9600	1900	500	500
Angle 45°	9400	2100	600	600
Angle 60°	9400	2100	700	700
Deadend	9500	2000	800	800
Single circuit, conductor 70/12 mm²				
Angle 0°	--	--	--	--
Angle 10°	--	--	--	--
Angle 15°	9600	1900	500	500
Angle 30°	9600	1900	500	500
Angle 45°	9400	2100	600	600
Angle 60°	9400	2100	700	700
Deadend	9500	2000	800	800

Soil: 16 kg/cm3

Concret: 2400 kg/m3

Ministry of Water and Power
decon DEUTSCHE ENERGIE-CONSULT INGENIEURGESELLSCHAFT mbH

Rehabilitation and Extension of Kabul City Distribution Network

Foundation for Medium Voltage

Date: January, 2005 | Revision: 1 | Scale: Without

Drawing: U F-01

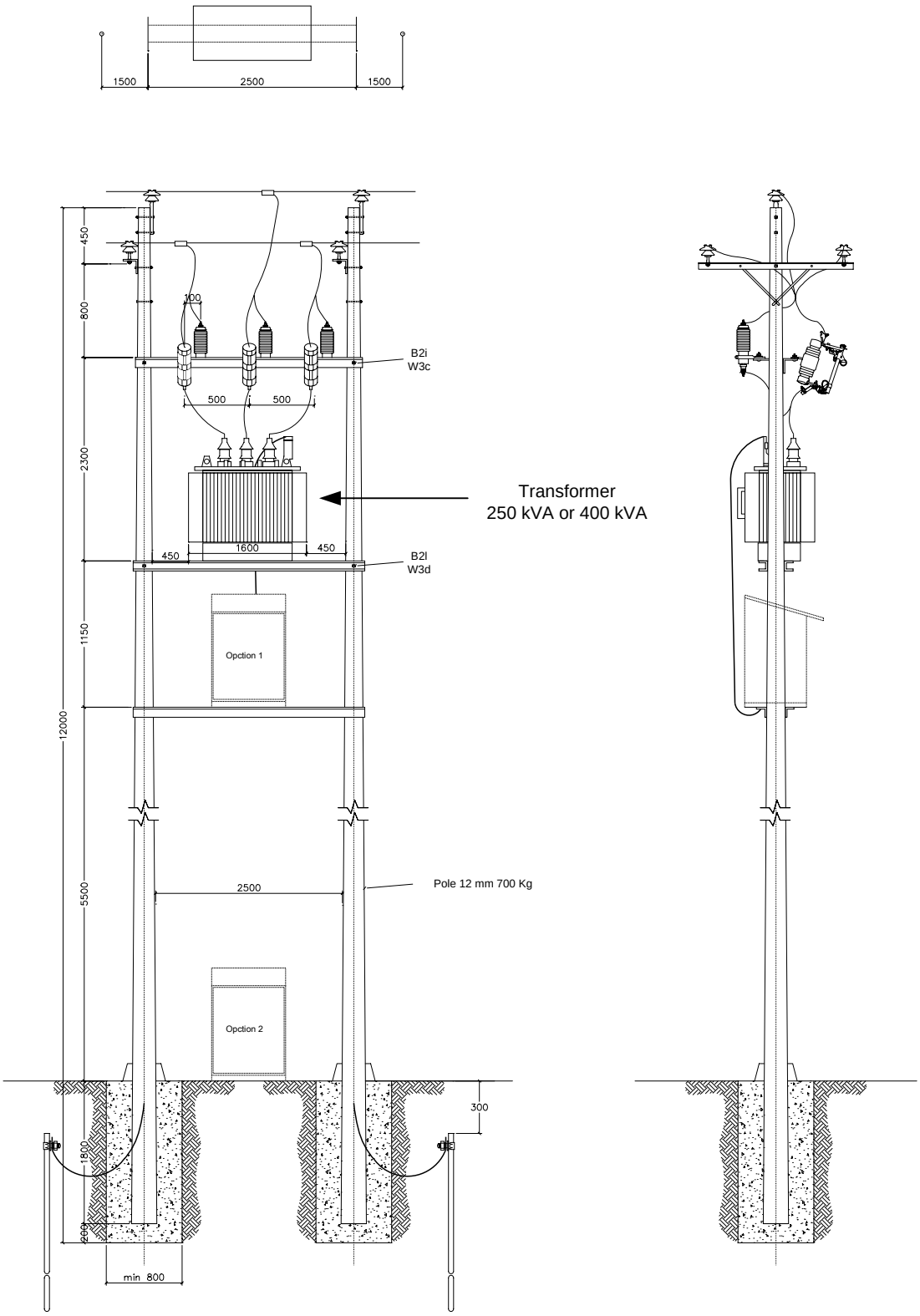

Nota:
Option 1: For LV Overhead Line Installations
Option 2: For LV Underground Installations

Ministry of Energy and Water decon DEUTSCHE ENERGIE-CONSULT INGENIEURGESELLSCHAFT mbH	Pole Mounted Transformer		DRAWING No.
Rehabilitation and Extension of Kabul City Distribution Network	Date: January, 2005	Revision: 1	Scale: Without	U	T - 01

LV-101	**SINGLE SUPPORT ANGLE (0°- 30°)**
LV-102	**DOUBLE DEADEND**
LV-103	**SINGLE SUPPORT WITH DEADEND BRANCH**
LV-104	**DOUBLE DEADEND WITH DEADEND BRANCH**

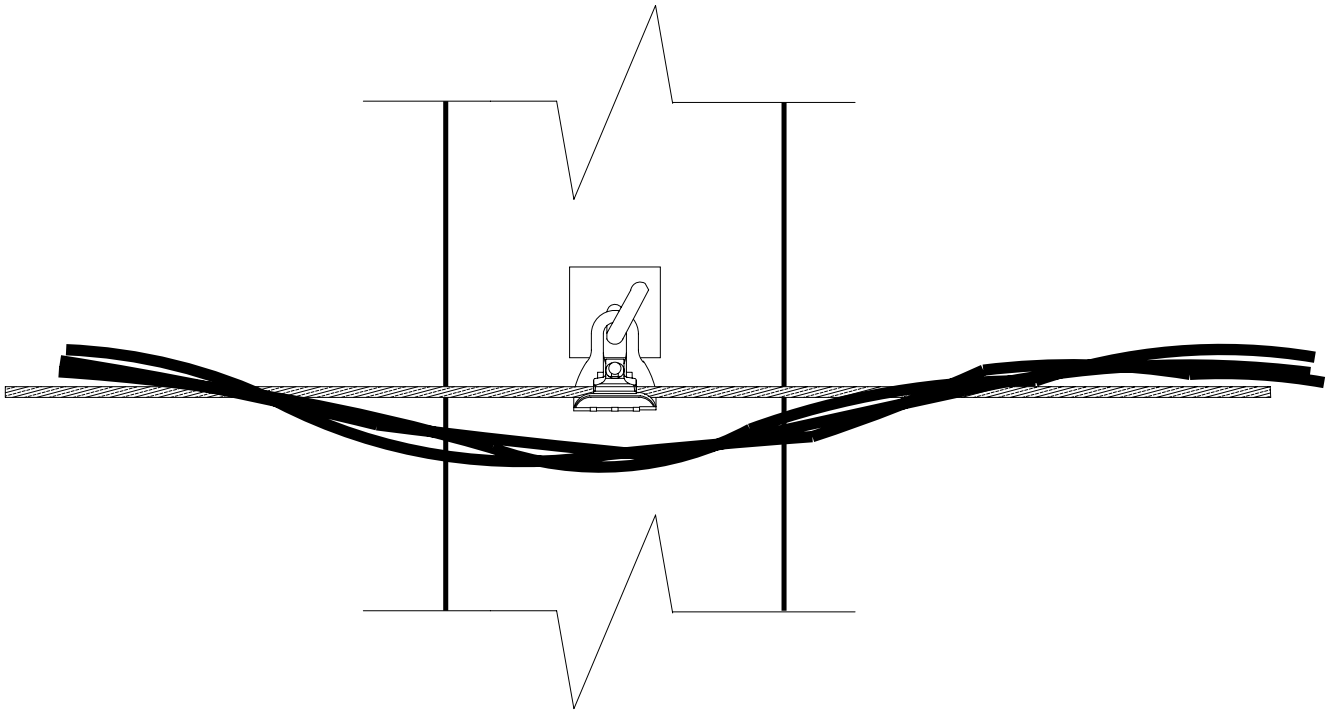

Ministry of Energy and Water
decon DEUTSCHE ENERGIE-CONSULT INGENIEURGESELLSCHAFT mbH

Rehabilitation and extension of the Kabul City distrubution Network

Low Voltage Construction

Single Support
(angle 0° - 30°)

Date: January, 2005

Revision: 1

Scale: Without

DRAWING No.

U

LV - 101

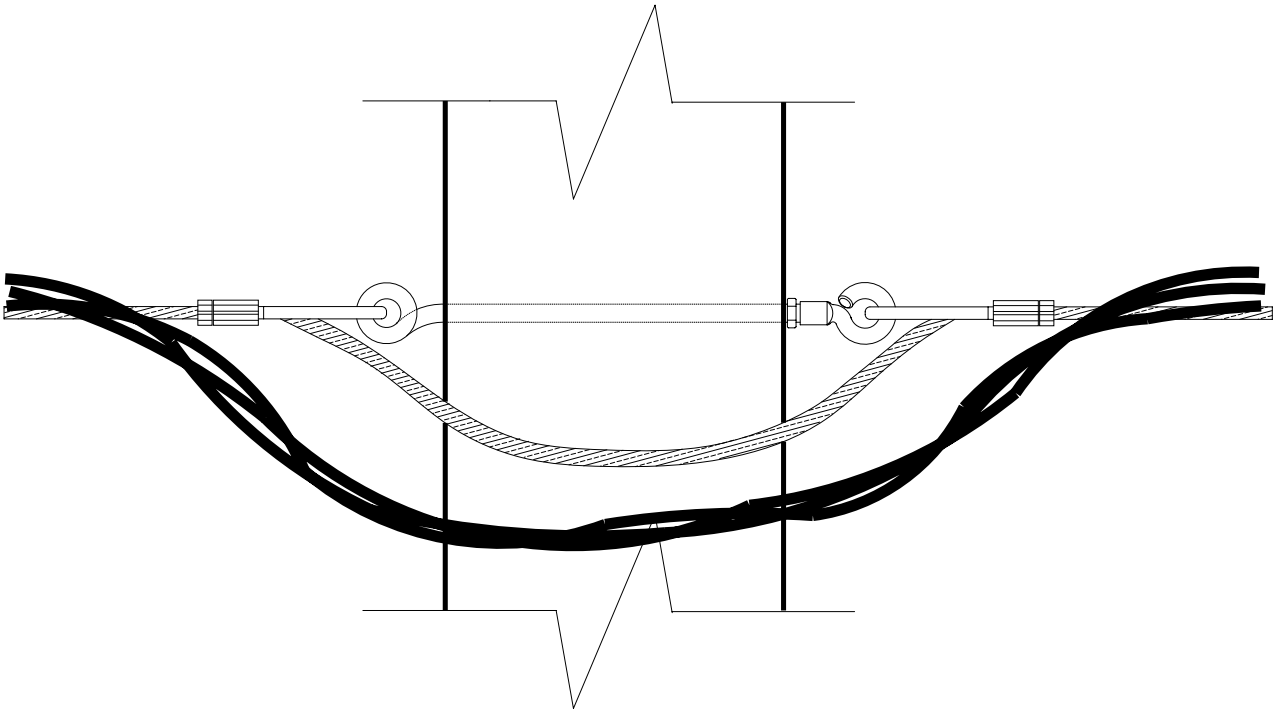

Ministry of Energy and Water decon DEUTSCHE ENERGIE-CONSULT INGENIEURGESELLSCHAFT mbH	Low Voltage Construction Double Deadend		DRAWING No.
Rehabilitation and extension of the Kabul City distrubution Network	Date: January, 2005	Revision: 1	Scale: Without	U	LV - 102

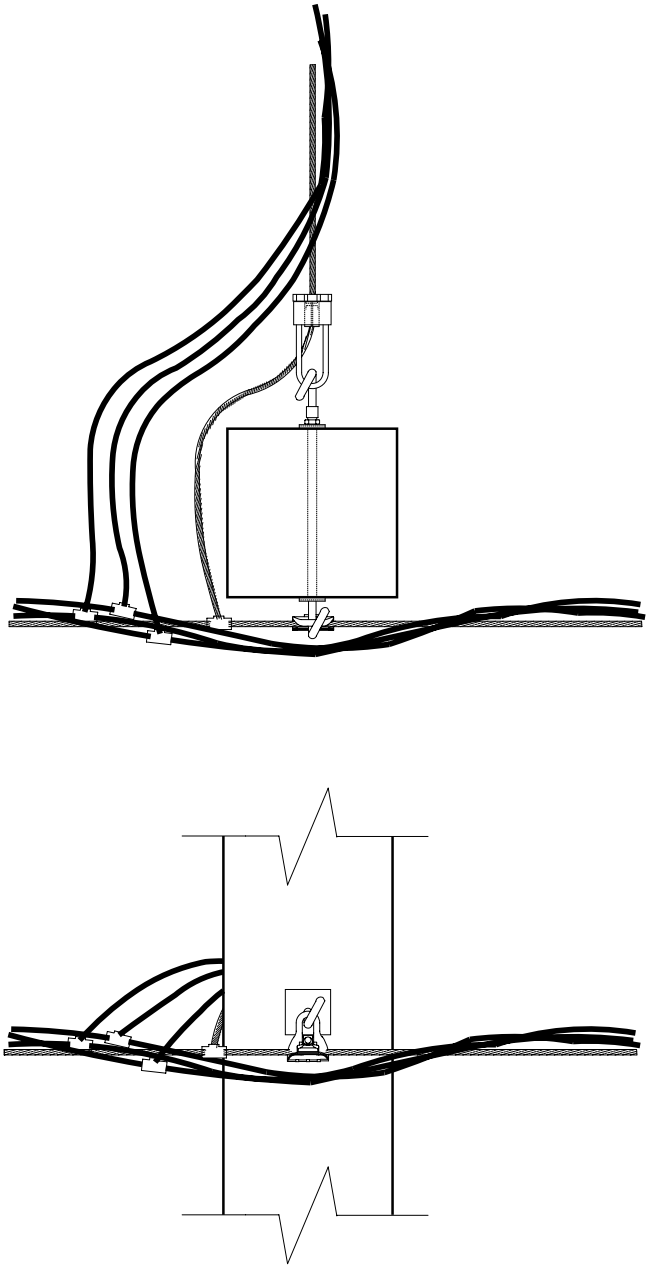

Ministry of Energy and Water
decon DEUTSCHE ENERGIE-CONSULT INGENIEURGESELLSCHAFT mbH

Rehabilitation and extension of the Kabul City distrubution Network

Low Voltage Costruction
Single Suport with Deadend Branch

Date: January, 2005 | Revision: 1 | Scale: Without

DRAWING No.

U | LV - 103

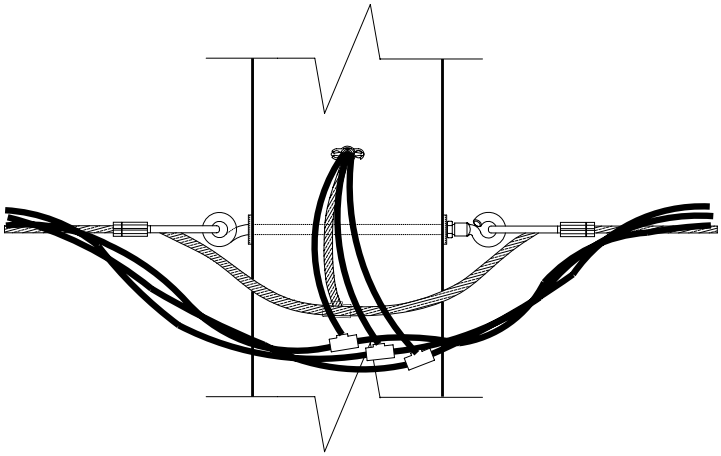

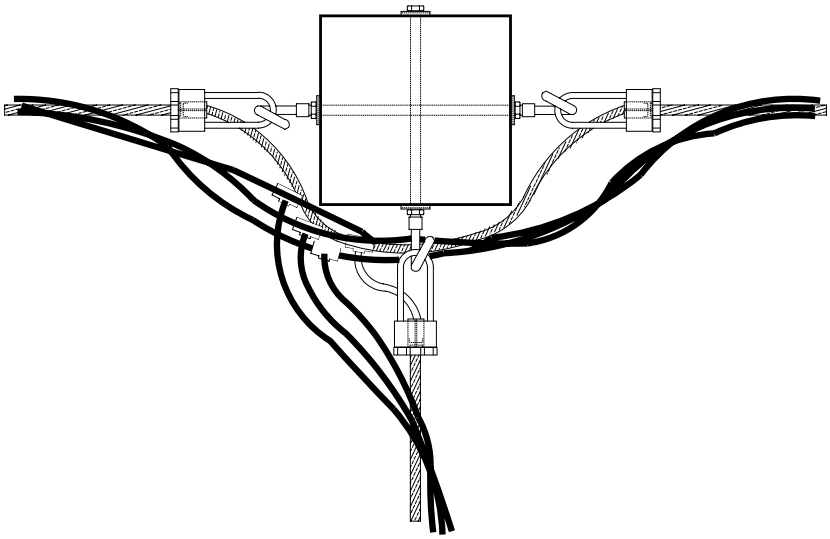

Ministry of Energy and Water
decon DEUTSCHE ENERGIE-CONSULT INGENIEURGESELLSCHAFT mbH

Rehabilitation and extension of the Kabul City distrubution Network

Low Voltage Construction

Double Deadend with Deadend Branch

Date: January, 2005 | Revision: 1 | Scale: Without

DRAWING No.

U | LV - 104

T-001	TRENCHES FOR DIRECT BURIAL CABLES – Low Voltage
T-002	TRENCHES FOR DIRECT BURIAL CABLES – Medium Voltage
T-003	TRENCHES FOR DIRECT BURIAL CABLES – Low and Medium Voltage
T-004	STREET CROSSING IN CONCRETE ENCASED DUCT
T-004.1	STREET CROSSING IN CONCRETE ENCASED DUCT
T-005	STREET CROSSING IN CONDUIT Special case
T-006	STREET CROSSING AND SECTIONS
T-007	TRENCHES FOR DIRECT BURIAL CABLES – Optical cable
T-009	TRENCHES FOR DIRECT BURIAL CABLES – Optical Cable and Medium Voltage

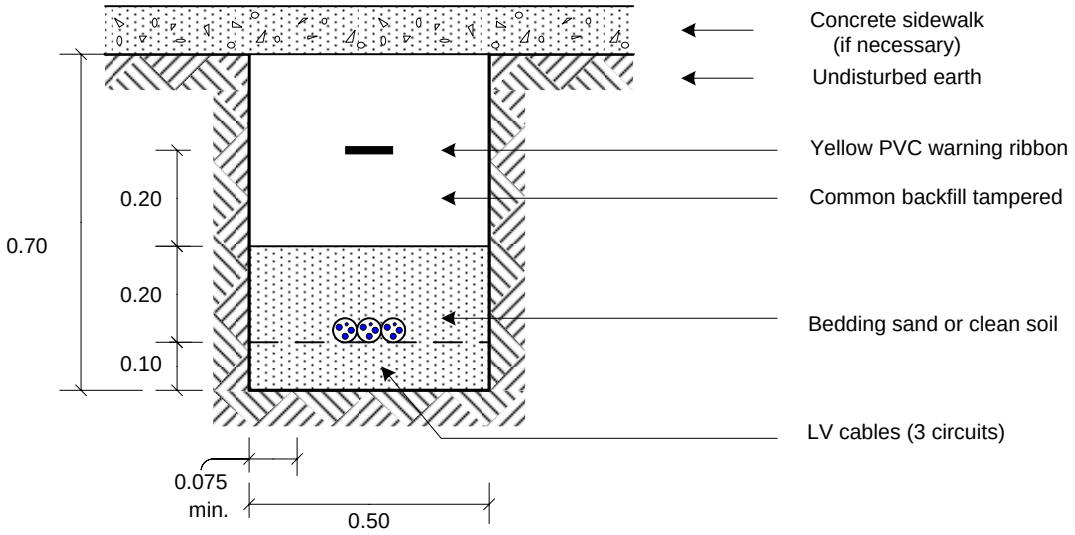

SECONDARY BASIC UNIT
T-001

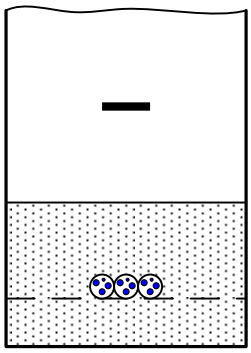

SECONDARY BASIC UNIT
T-001.1
with 3 circuits

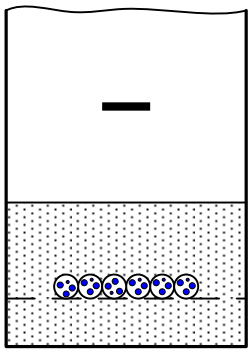

SECONDARY BASIC UNIT
T-001.2
with 6 circuits

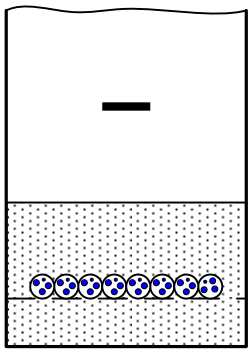

SECONDARY BASIC UNIT
T-001.3
with 8 circuits

Depth and width as specified are minimum.
Depth specified is to finish grade.
Sand bedding is not part of this unit and will be specified as needed. Backfilling is part of all trench units.
Backfill shall be placed in uniform layers, ten centimeters thick, on both sides of the cables and thoroughly compacted with pneumatic or hand tampers.
Warning tape is highly recommended to be placed above the installed cable.
Contractor shall repair any damages immediately

Ministry of Energy and Water decon DEUTSCHE ENERGIE-CONSULT INGENIEURGESELLSCHAFT mbH	TRENCHES FOR DIRECT BURIAL CABLES – Low Voltage			Drawing:
Rehabilitation and Extension of Kabul City Distribution Network	Date: October, 2004	Revision: 1	Scale: Without	U **T-001**

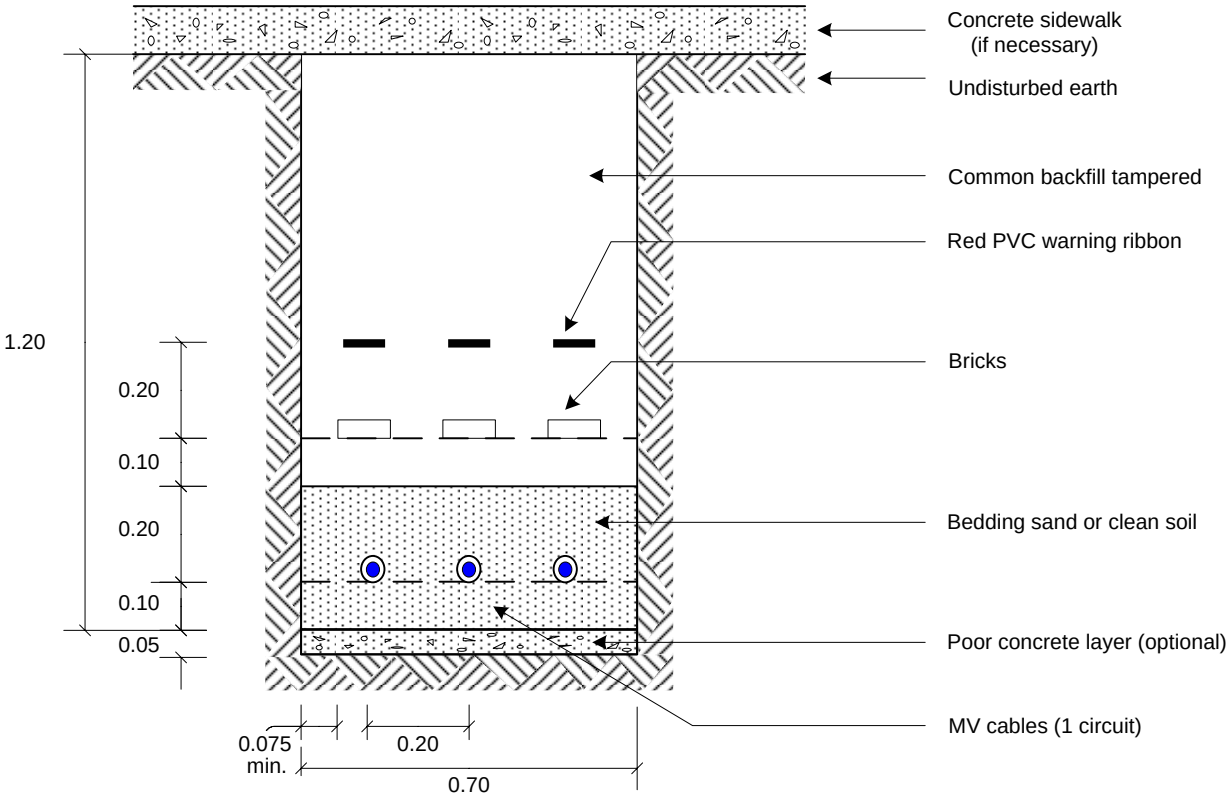

PRIMARY BASIC UNIT
T-002

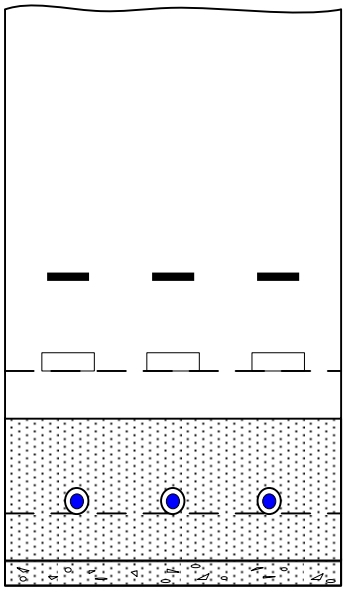

PRIMARY BASIC UNIT
T-002.1

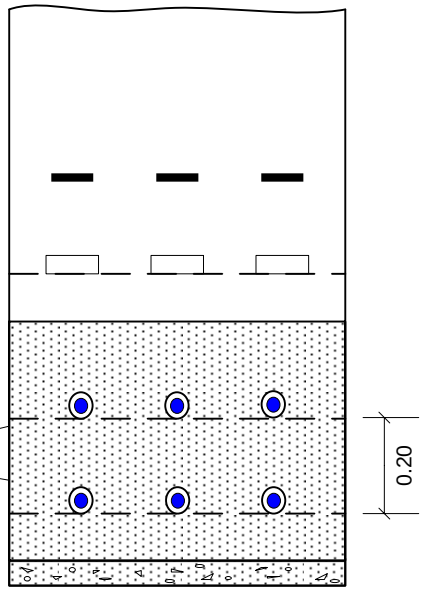

PRIMARY BASIC UNIT
T-002.2

Depth and width as specified are minimum.
Depth specified is to finish grade.
Sand bedding is not part of this unit and will be specified as needed. Backfilling is part of all trench units.
Backfill shall be placed in uniform layers, ten centimeters thick, on both sides of the cables and thoroughly compacted with pneumatic or hand tampers.
A layer of solid bricks alert future excavations about danger below. The bricks shall be put with the mayor dimensions across the cable axis.
Warning tape is highly recommended to be placed above the installed cable.
Contractor shall repair any damages immediately.

Ministry of Energy and Water decon DEUTSCHE ENERGIE-CONSULT INGENIEURGESELLSCHAFT mbH	TRENCHES FOR DIRECT BURIAL CABLES – Medium Voltage		Drawing:
Rehabilitation and Extension of Kabul City Distribution Network	Date: October, 2004	Revision: 1	Scale: Without	U	T-002

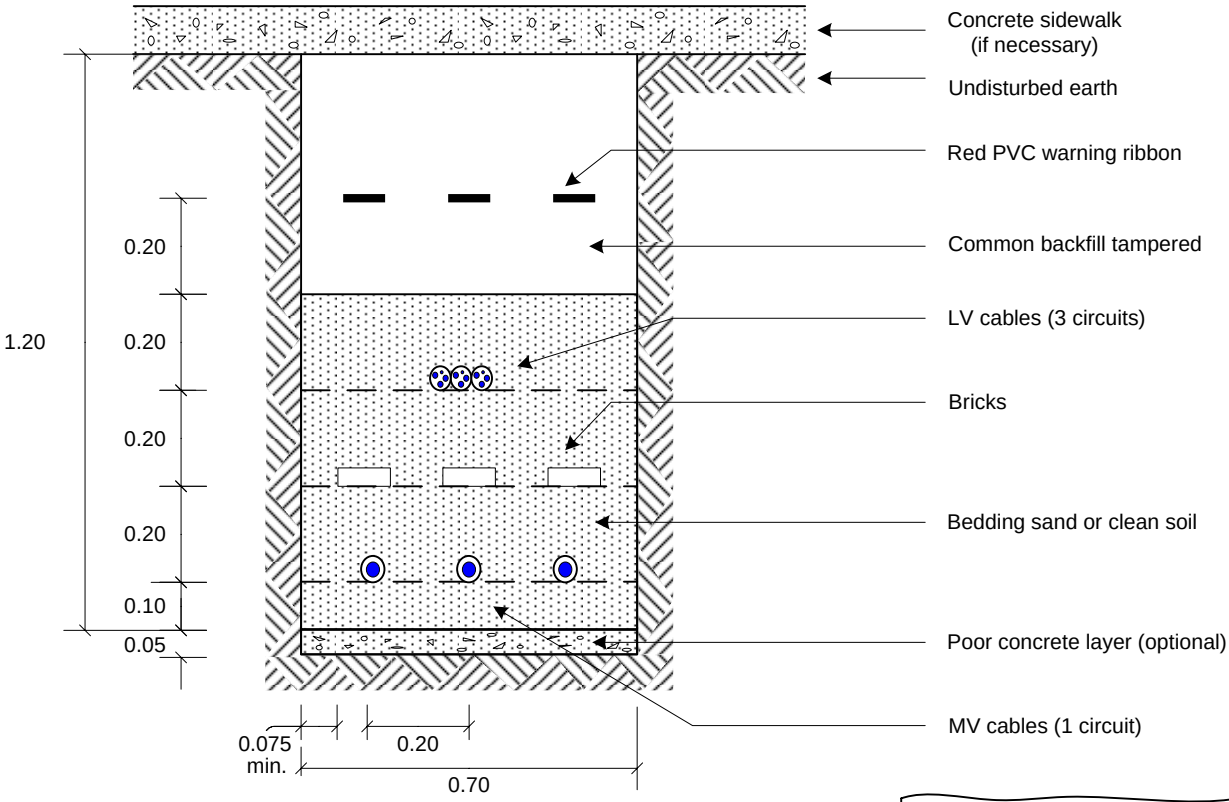

PRIMARY AND SECONDARY BASIC UNIT
T-003

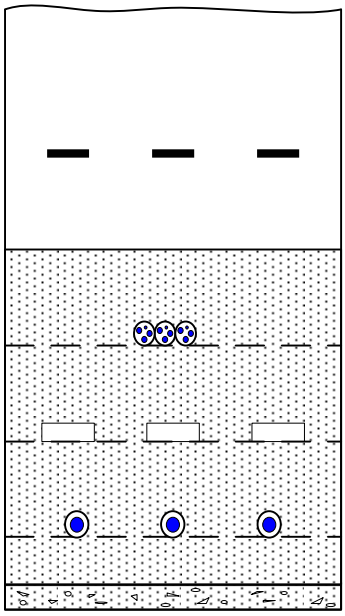

PRIMARY AND SECONDARY
BASIC UNIT
T-003.1

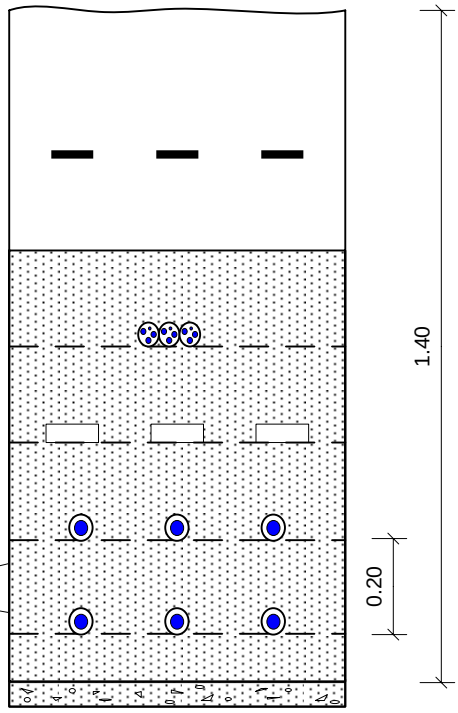

PRIMARY AND SECONDARY
BASIC UNIT
T-003.2

Depth and width as specified are minimum.
Depth specified is to finish grade.
Sand bedding is not part of this unit and will be specified as needed. Backfilling is part of all trench units.
Backfill shall be placed in uniform layers, ten centimeters thick, on both sides of the cables and thoroughly compacted with pneumatic or hand tampers.
A layer of solid bricks alert future excavations about danger below. The bricks shall be put with the mayor dimensions across the cable axis.
Warning tape is highly recommended to be placed above the installed cable.
Contractor shall repair any damages immediately.

Ministry of Energy and Water decon DEUTSCHE ENERGIE-CONSULT INGENIEURGESELLSCHAFT mbH	TRENCHES FOR DIRECT BURIAL CABLES – Low and Medium Voltage		Drawing:
Rehabilitation and Extension of Kabul City Distribution Network	Date: October, 2004	Revision: 1	Scale: Without	U	T-003

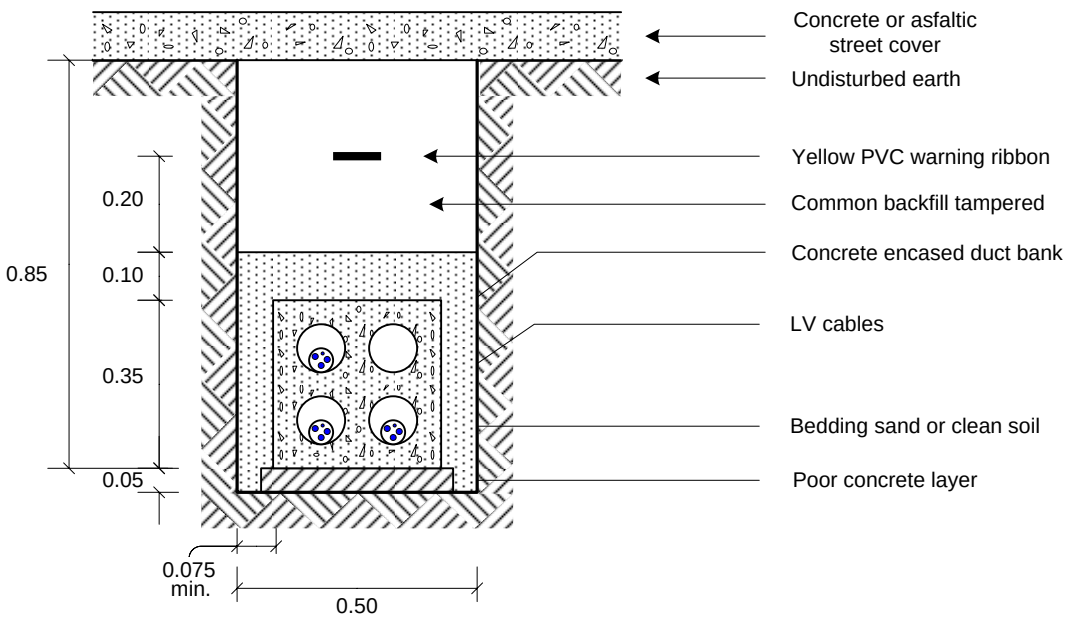

SECONDARY BASIC UNIT
T-004 a)

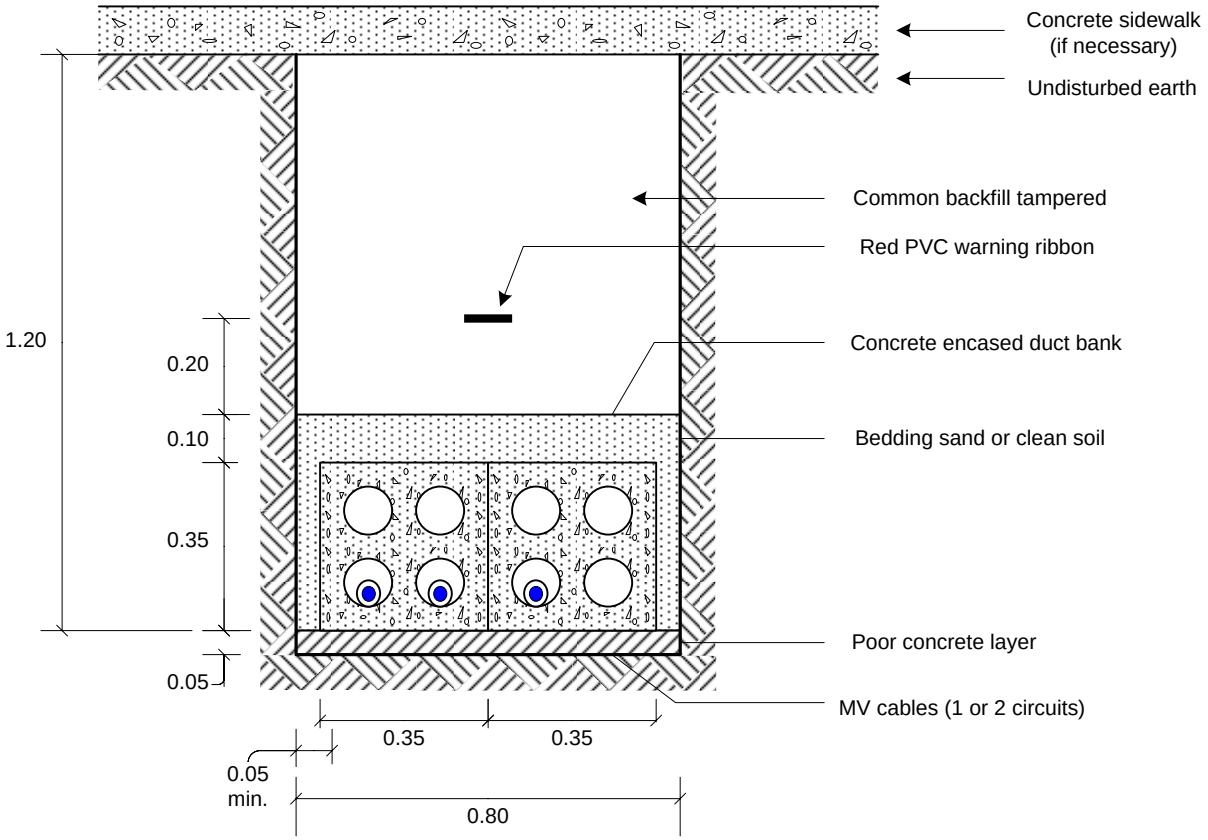

PRIMARY BASIC UNIT
T-004 b)

Ministry of Energy and Water decon DEUTSCHE ENERGIE-CONSULT INGENIEURGESELLSCHAFT mbH	STREET CROSSING IN CONCRETE ENCASED DUCT		Drawing:
Rehabilitation and Extension of Kabul City Distribution Network	Date: October, 2004	Revision: 1	Scale: Without	U	**T-004**

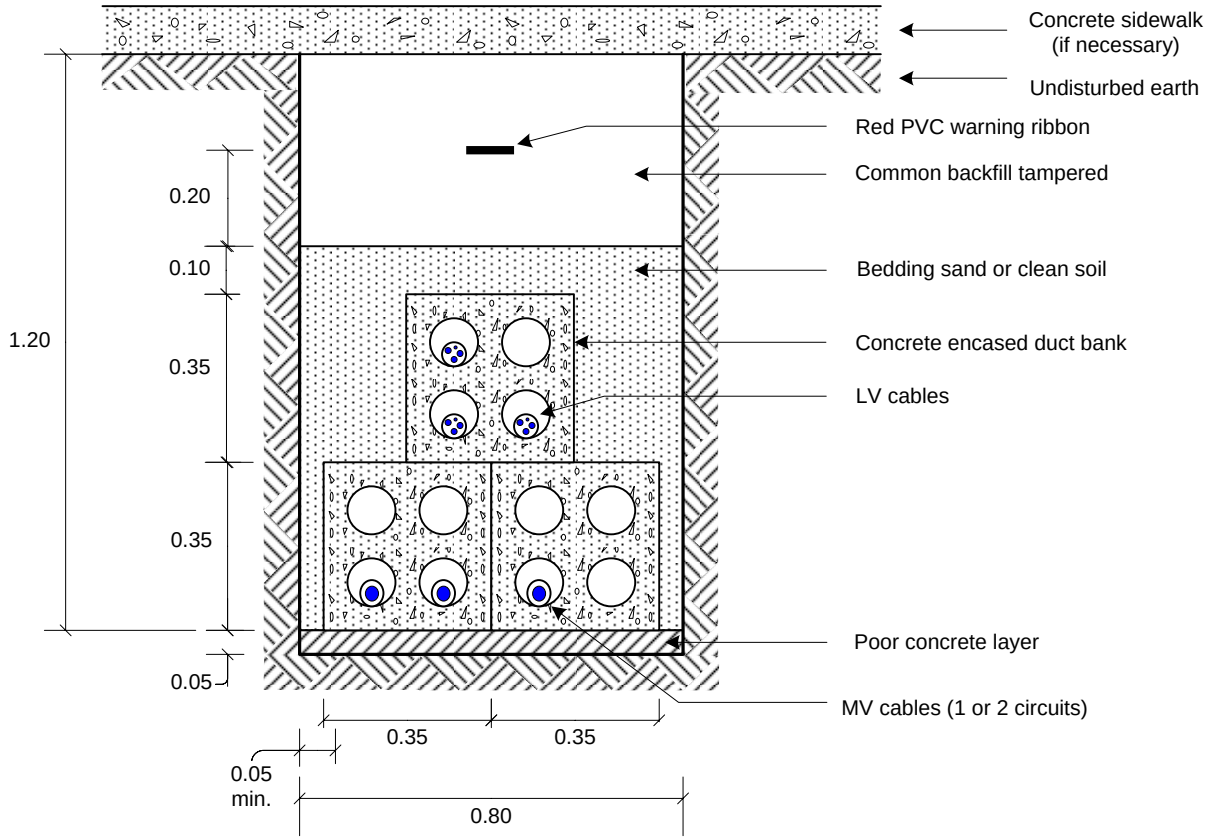

PRIMARY and SECONDARY BASIC UNIT
T-004 c)

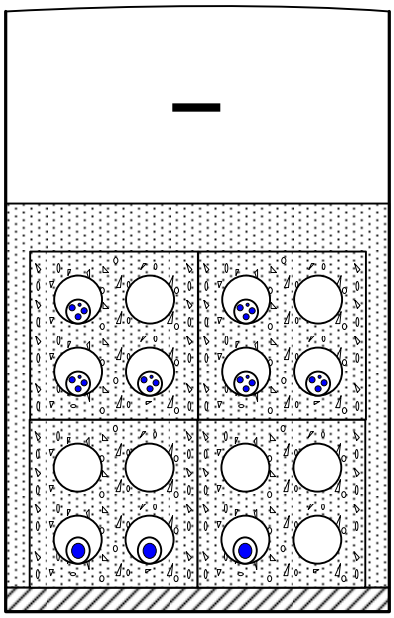

PRIMARY and SECONDARY BASIC UNIT
T-004 d)

Ministry of Energy and Water decon DEUTSCHE ENERGIE-CONSULT INGENIEURGESELLSCHAFT mbH	STREET CROSSING IN CONCRETE ENCASED DUCT			Drawing:
Rehabilitation and Extension of Kabul City Distribution Network	Date: October, 2004	Revision: 1	Scale: Without	U T-004.1

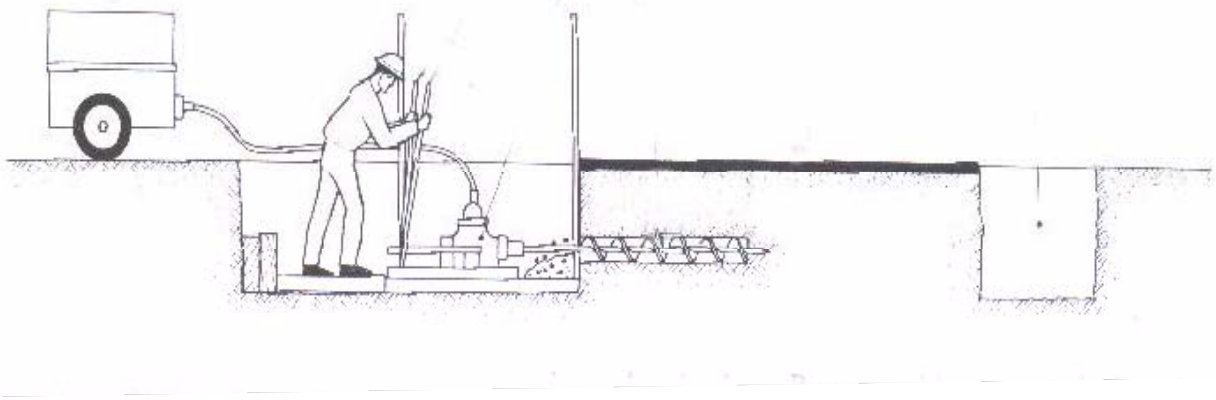

How to drill a hole to put the conduits to street crossing

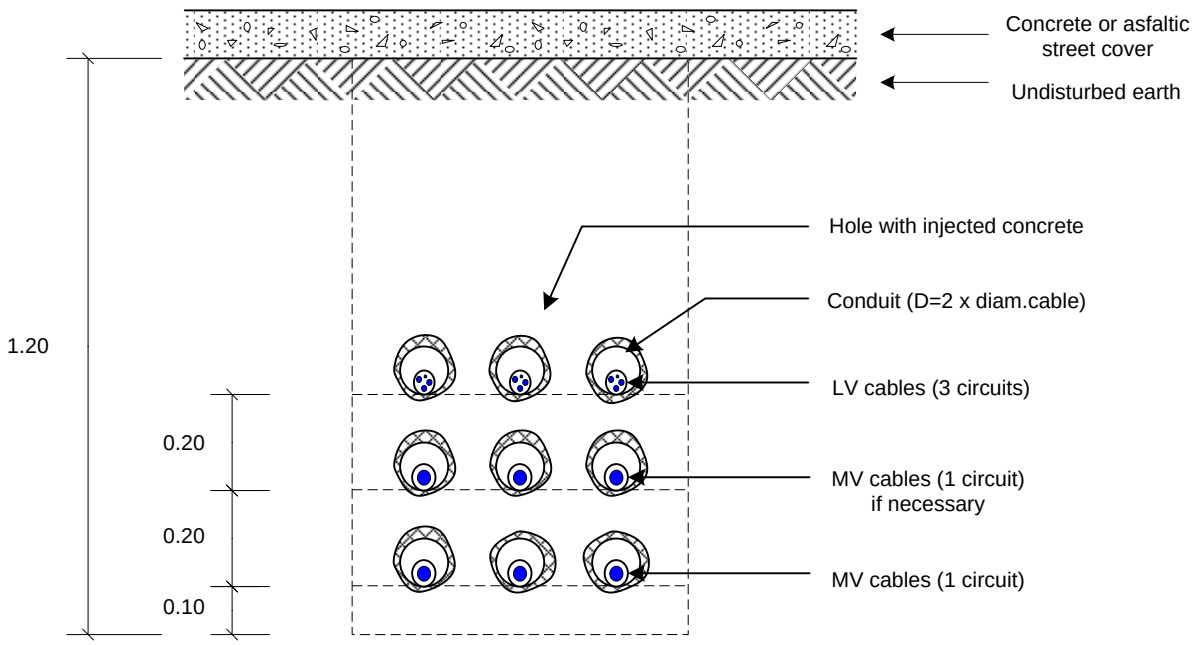

Ministry of Energy and Water decon DEUTSCHE ENERGIE-CONSULT INGENIEURGESELLSCHAFT mbH	STREET CROSSING IN CONDUIT Special case			Drawing:
Rehabilitation and Extension of Kabul City Distribution Network	Date: October, 2004	Revision: 1	Scale: Without	U T-005

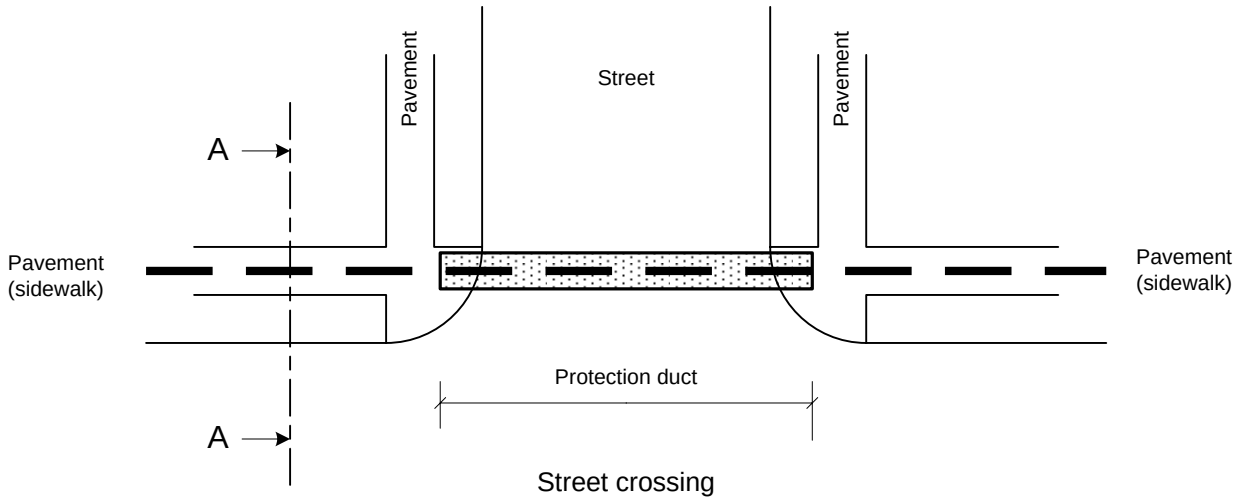

Street crossing
(plant view)

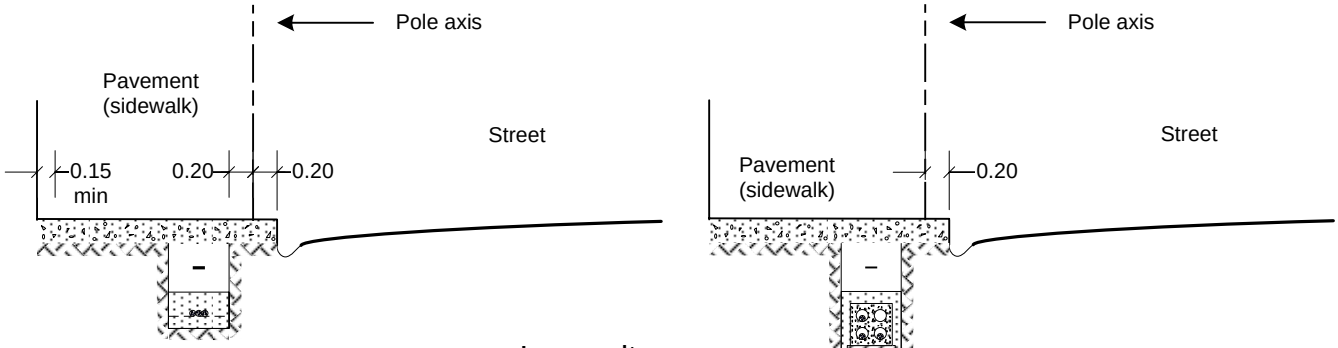

Low voltages

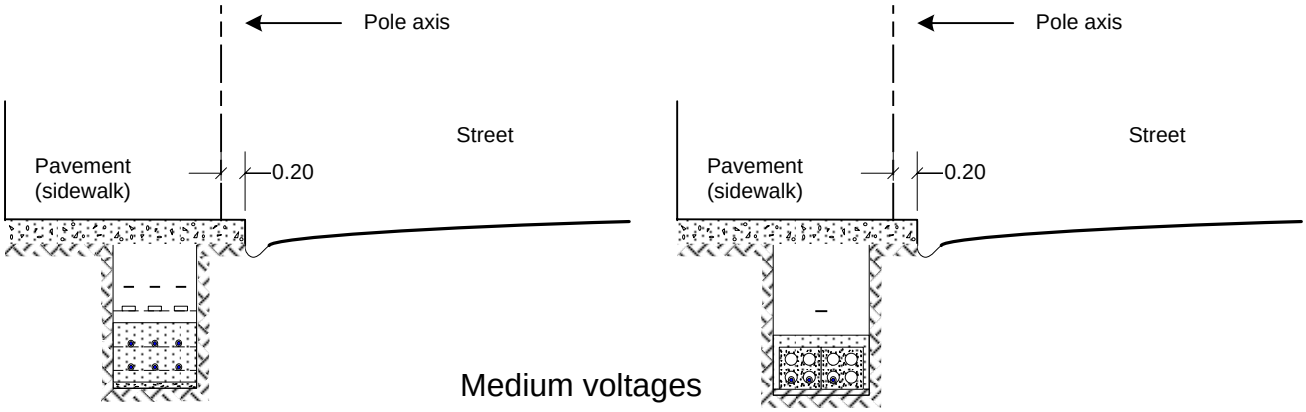

Medium voltages

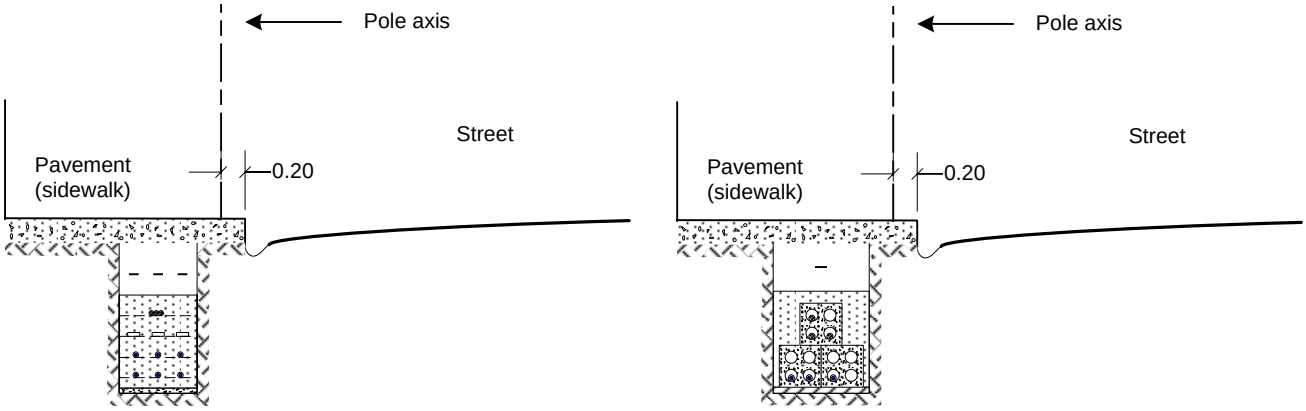

Low and medium voltages

Ministry of Energy and Water decon DEUTSCHE ENERGIE-CONSULT INGENIEURGESELLSCHAFT mbH	STREET CROSSING AND SECTIONS			Drawing:
Rehabilitation and Extension of Kabul City Distribution Network	Date: October, 2004	Revision: 1	Scale: Without	U T-006

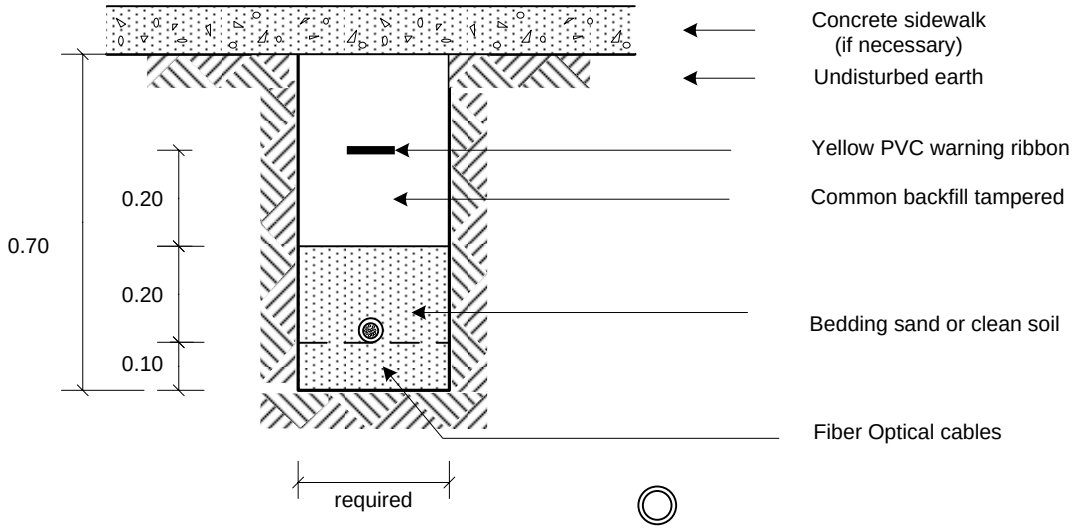

OPTICAL CABLE BASIC UNIT
T-007

Depth and width as specified are minimum.
Depth specified is to finish grade.
Sand bedding is not part of this unit and will be specified as needed. Backfilling is part of all trench units.
Backfill shall be placed in uniform layers, ten centimeters thick, on both sides of the cables and thoroughly compacted with pneumatic or hand tampers.
Warning tape is highly recommended to be placed above the installed cable.
Contractor shall repair any damages immediately

Ministry of Energy and Water decon DEUTSCHE ENERGIE-CONSULT INGENIEURGESELLSCHAFT mbH	TRENCHES FOR DIRECT BURIAL CABLES – Optical cable		Drawing:
Rehabilitation and Extension of Kabul City Distribution Network	Date: January, 2005	Revision: 1	Scale: Without	U	T-007

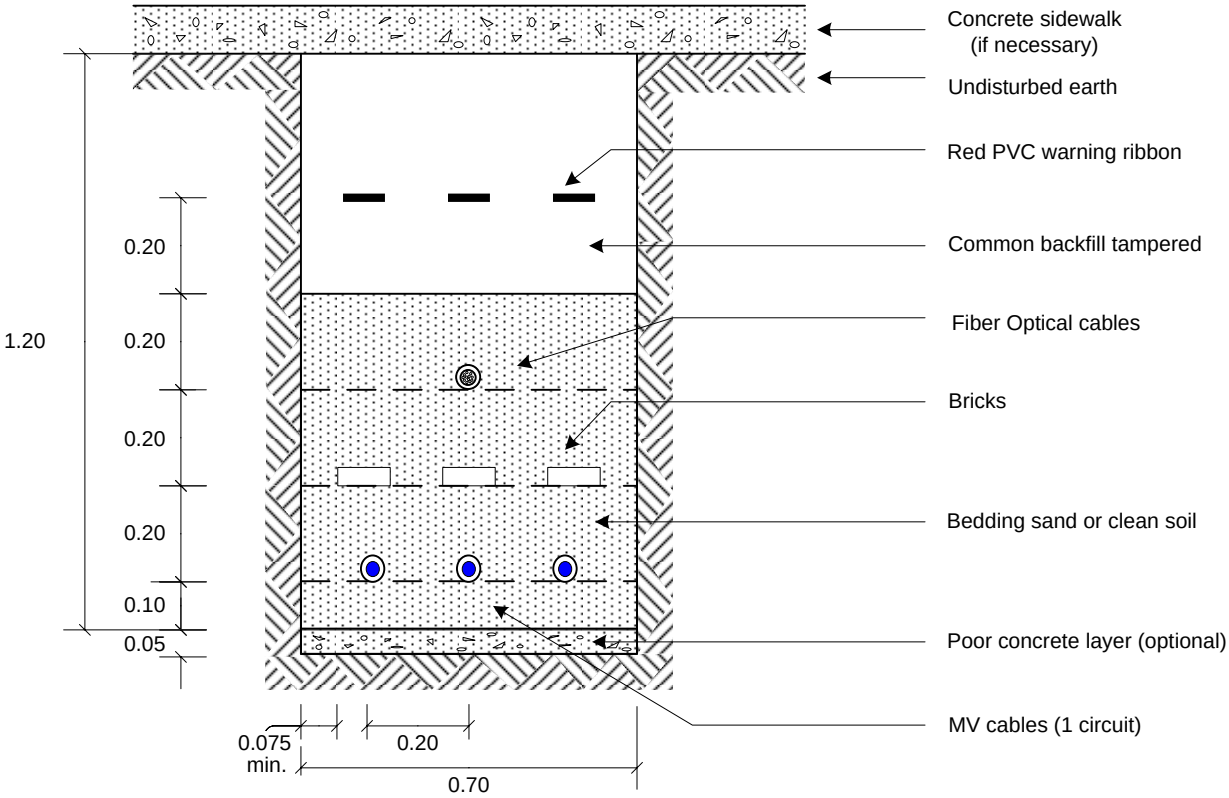

FIBER OPTICAL CABLES
AND MEDIUM VOLTAGE CABLES

Depth and width as specified are minimum.
Depth specified is to finish grade.
Sand bedding is not part of this unit and will be specified as needed. Backfilling is part of all trench units.
Backfill shall be placed in uniform layers, ten centimeters thick, on both sides of the cables and thoroughly compacted with pneumatic or hand tampers.
A layer of solid bricks alert future excavations about danger below. The bricks shall be put with the mayor dimensions across the cable axis.
Warning tape is highly recommended to be placed above the installed cable.
Contractor shall repair any damages immediately.

Ministry of Energy and Water decon DEUTSCHE ENERGIE-CONSULT INGENIEURGESELLSCHAFT mbH		TRENCHES FOR DIRECT BURIAL CABLES – Optical Cable and Medium Voltage			Drawing:
Rehabilitation and Extension of Kabul City Distribution Network		Date: January, 2005	Revision: 1	Scale: Without	U T-009

FO-1	Figure-8 loose tube stranded self - supporting cable
FO-2	Loose tube stranded armored cable for direct burial installations
FO-3	Installation Optical Cable Type figure-8
FO-4	Installation Optical Cable Type figure-8
FO-5	Installation Optical Cable Type figure-8
FO-6	Installation Optical Cable Type figure-8
FO-7	Installation Optical Cable Type figure-8
FO-8	Single layer Optical ground wire (OPGW)

Figure - 8 loose tube stranded self - supporting cable

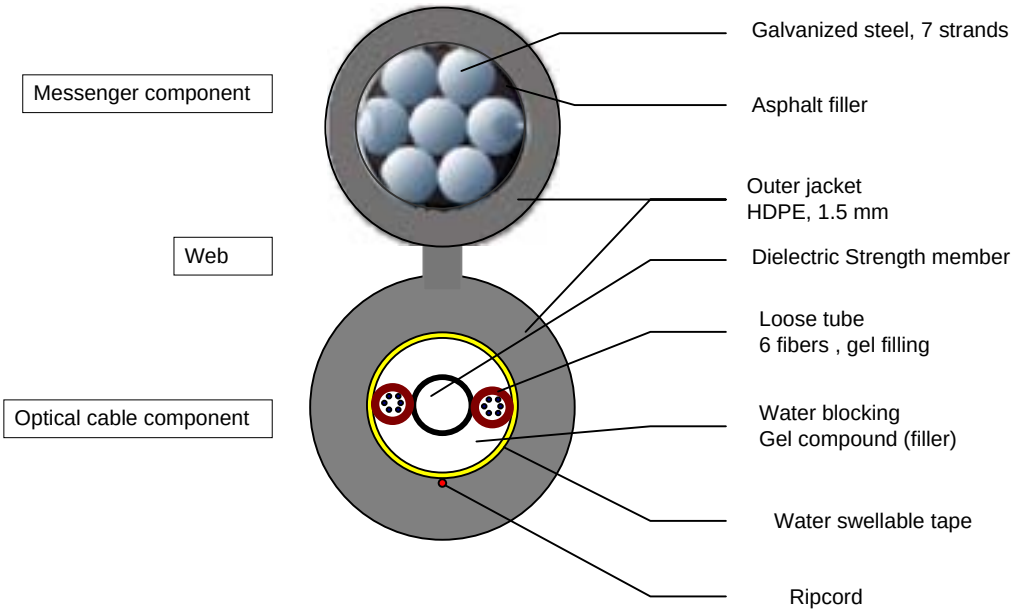

Total fiber count = 12

Ministry of Energy and Water decon DEUTSCHE ENERGIE-CONSULT INGENIEURGESELLSCHAFT mbH	Figure-8 loose tube stranded self - supporting cable			Drawing:	
Rehabilitation and Extension of Kabul City Distribution Network	Date: January, 2005	Revision: 1	Scale: Without	U	**FO-1**

Loose tube stranded armored cable for direct burial installations

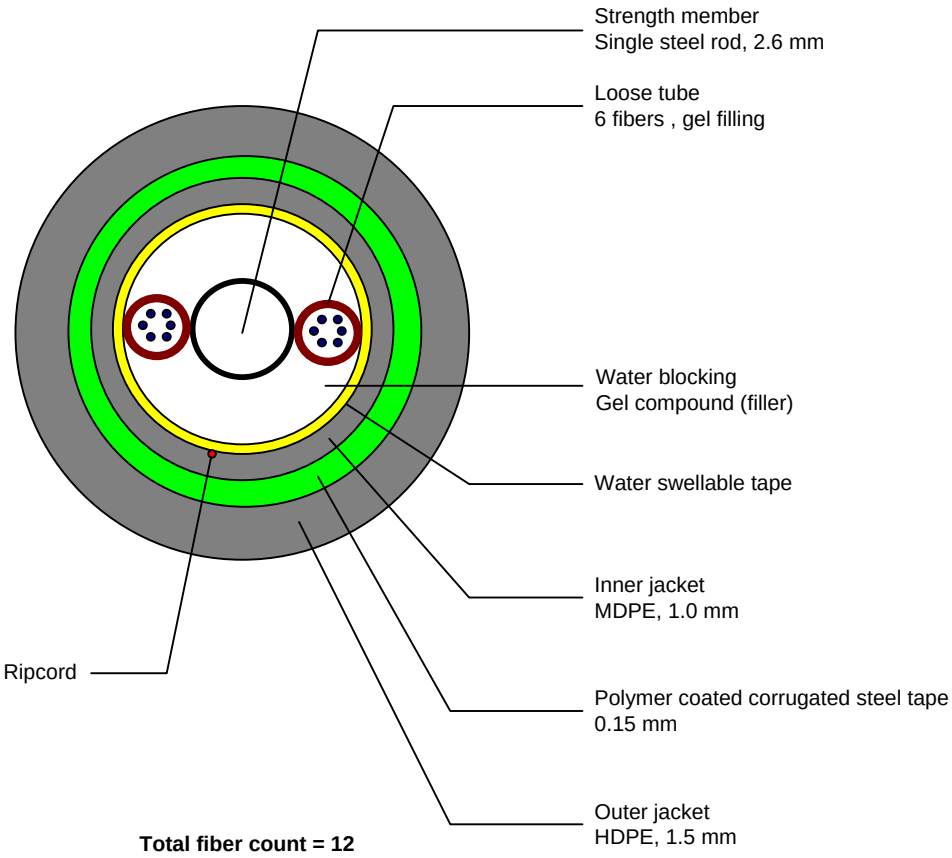

Ministry of Energy and Water decon DEUTSCHE ENERGIE-CONSULT INGENIEURGESELLSCHAFT mbH	Loose tube stranded armored cable for direct burial installations			Drawing:	
Rehabilitation and Extension of Kabul City Distribution Network	Date: January, 2005	Revision: 1	Scale: Without	U	FO-2

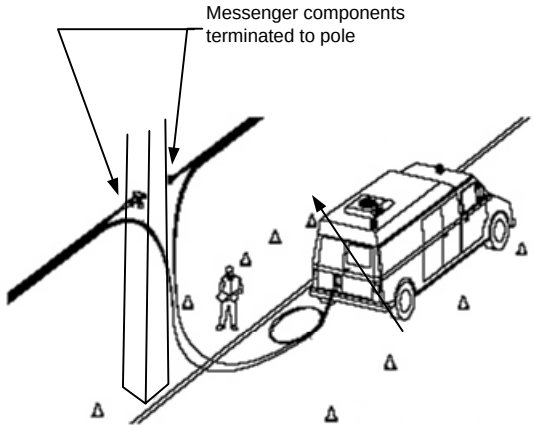

FO-3a

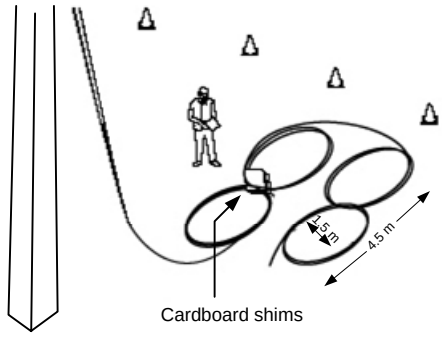

FO-3b

Ministry of Energy and Water decon DEUTSCHE ENERGIE-CONSULT INGENIEURGESELLSCHAFT mbH	Installation Optical Cable Type figure-8			Drawing:
Rehabilitation and Extension of Kabul City Distribution Network	Date: January, 2005	Revision: 1	Scale: Without	U FO-3

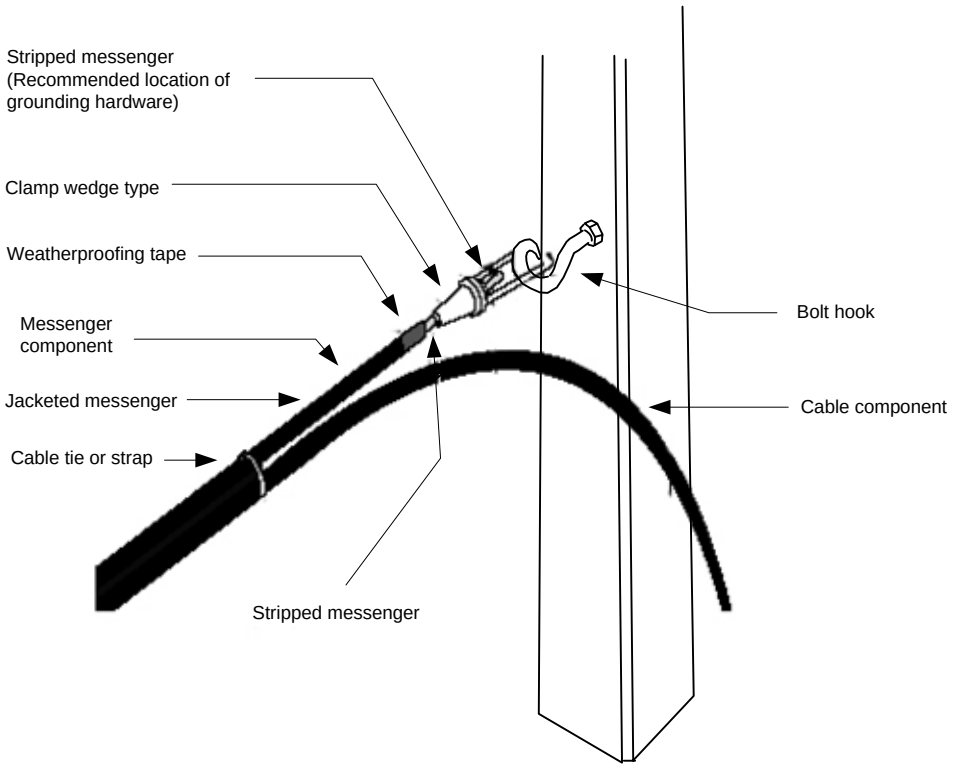

Ministry of Energy and Water decon DEUTSCHE ENERGIE-CONSULT INGENIEURGESELLSCHAFT mbH	Installation Optical Cable Type figure-8			Drawing:
Rehabilitation and Extension of Kabul City Distribution Network	Date: January, 2005	Revision: 1	Scale: Without	U FO-4

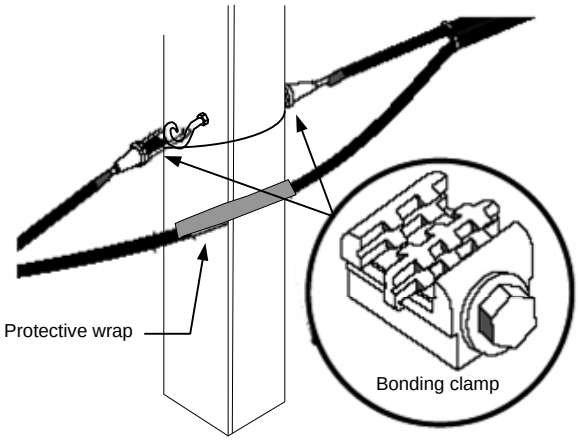

FO-5a

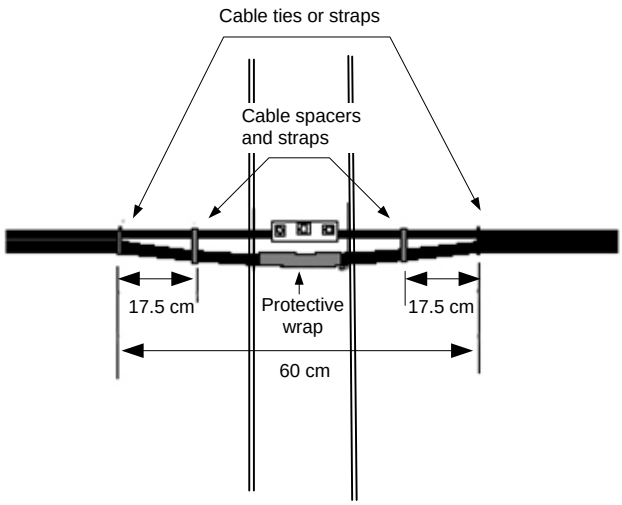

FO-5b

Ministry of Energy and Water decon DEUTSCHE ENERGIE-CONSULT INGENIEURGESELLSCHAFT mbH	Installation Optical Cable Type figure-8			Drawing:
Rehabilitation and Extension of Kabul City Distribution Network	Date: January, 2005	Revision: 1	Scale: Without	U **FO-5**

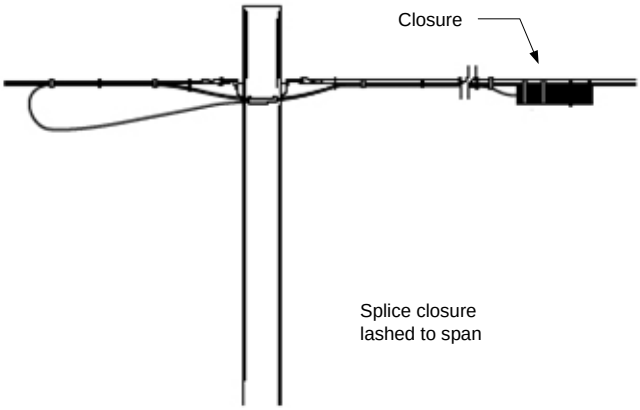

FO-6a

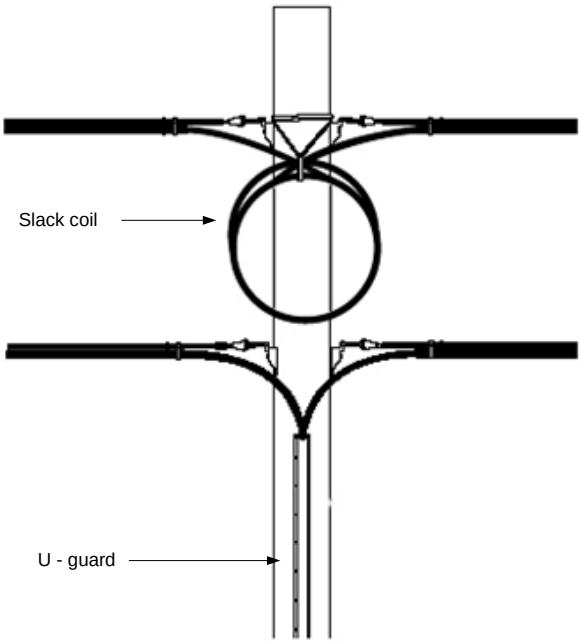

FO-6b

Ministry of Energy and Water decon DEUTSCHE ENERGIE-CONSULT INGENIEURGESELLSCHAFT mbH	Installation Optical Cable Type figure-8			Drawing:
Rehabilitation and Extension of Kabul City Distribution Network	Date: January, 2005	Revision: 1	Scale: Without	U FO-6

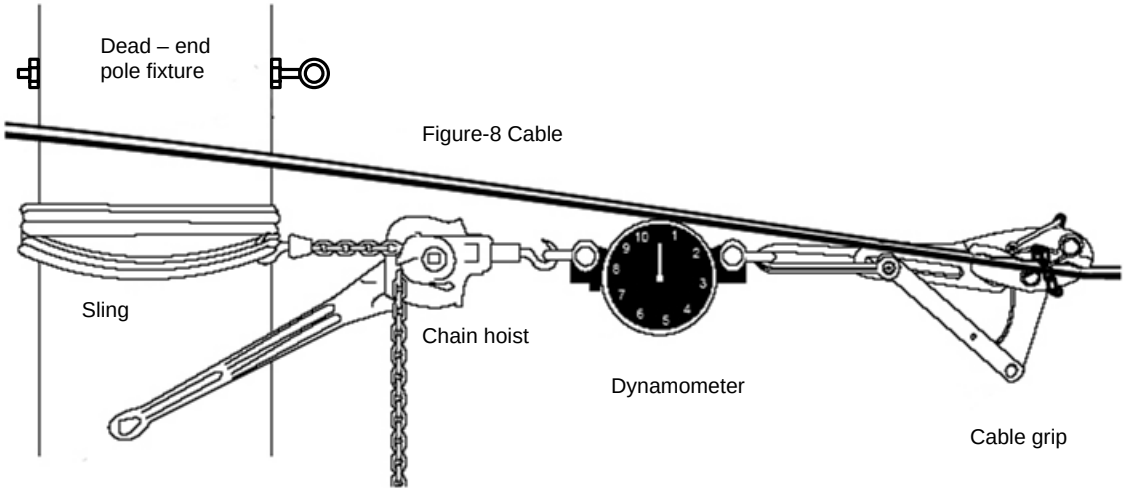

Tensioning set-up

Ministry of Energy and Water decon DEUTSCHE ENERGIE-CONSULT INGENIEURGESELLSCHAFT mbH	Installation Optical Cable Type figure-8			Drawing:
Rehabilitation and Extension of Kabul City Distribution Network	Date: January, 2005	Revision: 1	Scale: Without	U FO-7

Single layer - Optical ground wire (OPGW)

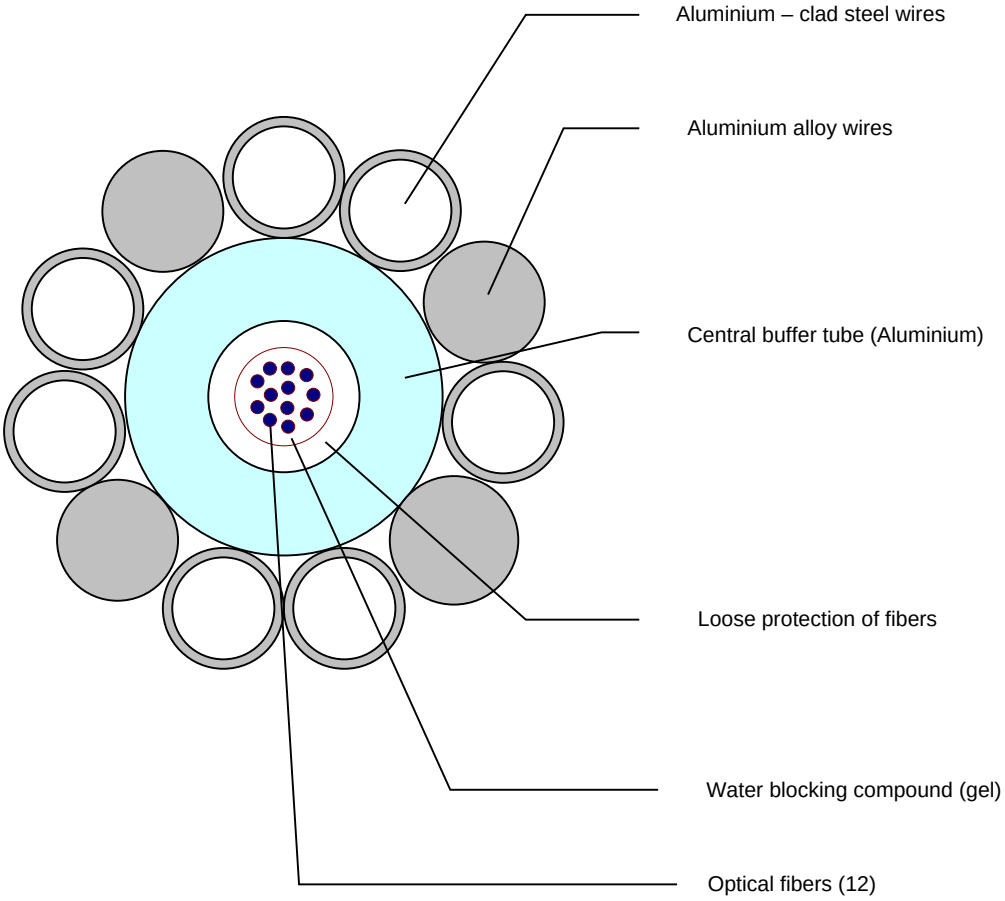

Ministry of Energy and Water decon DEUTSCHE ENERGIE-CONSULT INGENIEURGESELLSCHAFT mbH	Single layer Optical ground wire (OPGW)			Drawing:
Rehabilitation and Extension of Kabul City Distribution Network	Date: January, 2005	Revision: 1	Scale: Without	U FO-8

PR-01	RECLOSER WITH BY-PASS SWITCH
PR-02	RECLOSER WITHOUT BY-PASS SWITCH
PR-03	Load Break Switch
PR-04	Single support on cross arm Disconnecting Switch
PR-05	Outgoing cable to overhead line

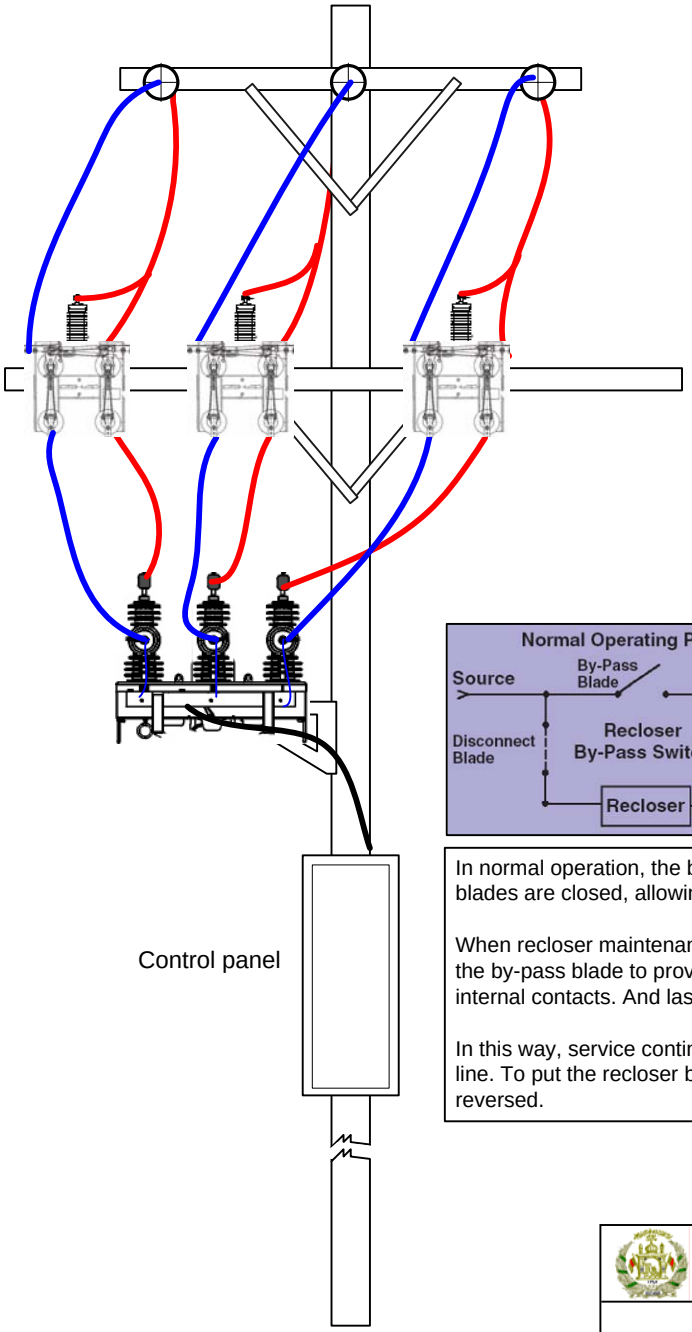

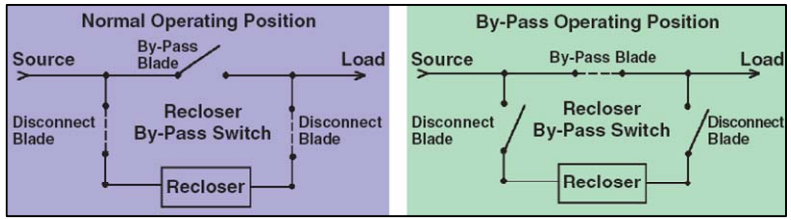

In normal operation, the by-pass switchblade is open and the two disconnect blades are closed, allowing the recloser to be in the circuit.

When recloser maintenance, testing, repair or removal is required, first close the by-pass blade to provide a parallel current path. Then open the recloser's internal contacts. And last, open both disconnect blades of the by-pass switch.

In this way, service continuity is maintained and the recloser is isolated from the line. To put the recloser back in service, the switch operating procedure is reversed.

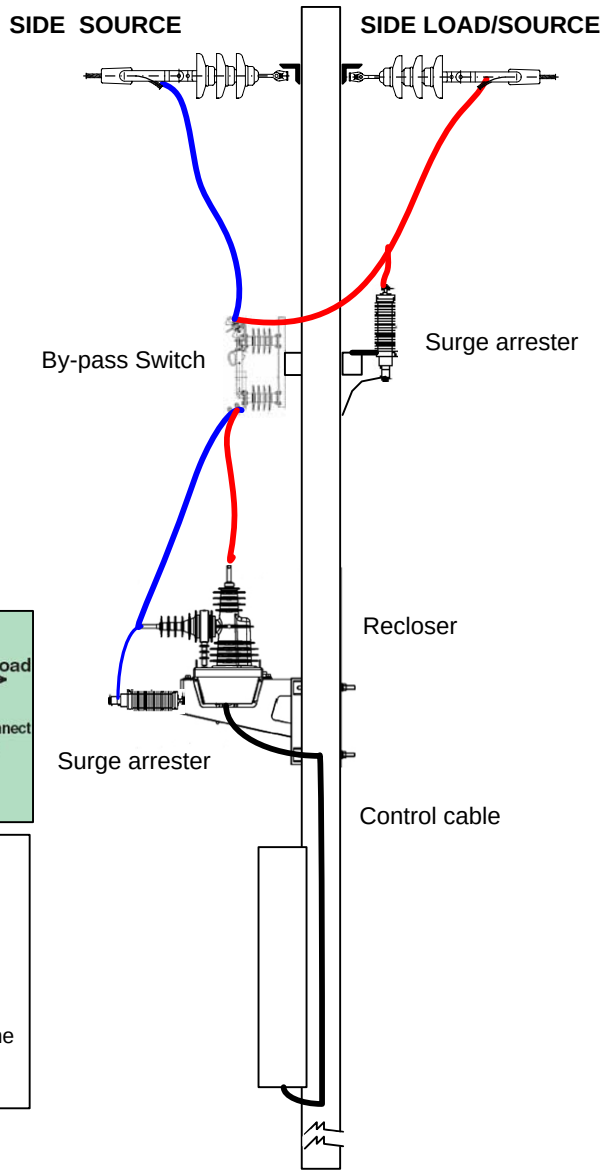

Ministry of Energy and Water decon DEUTSCHE ENERGIE-CONSULT INGENIEURGESELLSCHAFT mbH	RECLOSER WITH BY-PASS SWITCH		Drawing:
Rehabilitation and Extension of Kabul City Distribution Network	Date: December 2004	Revision: 1	Scale: Without	U	PR-01

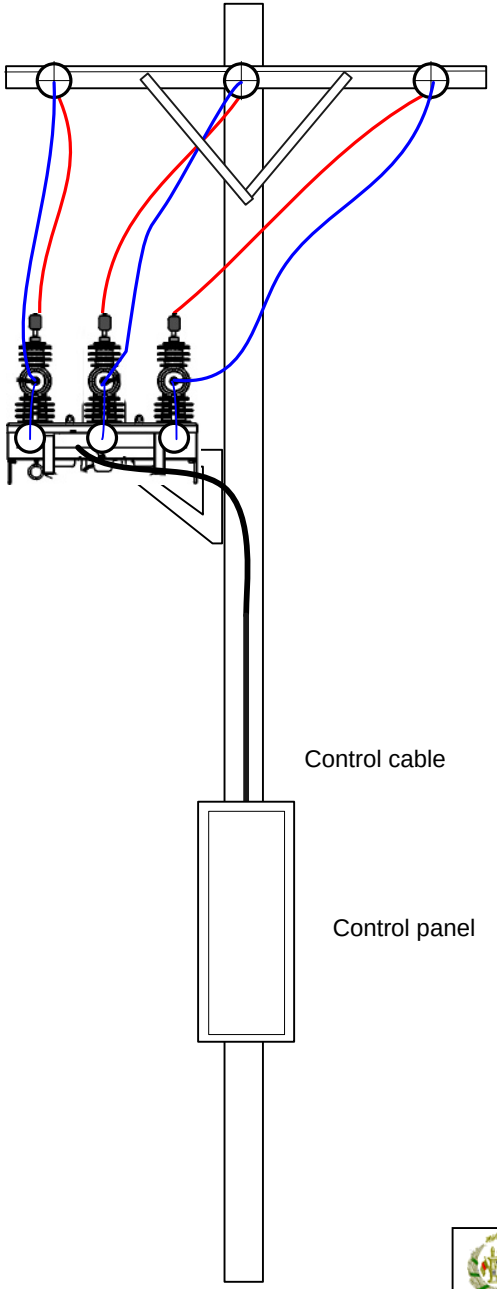

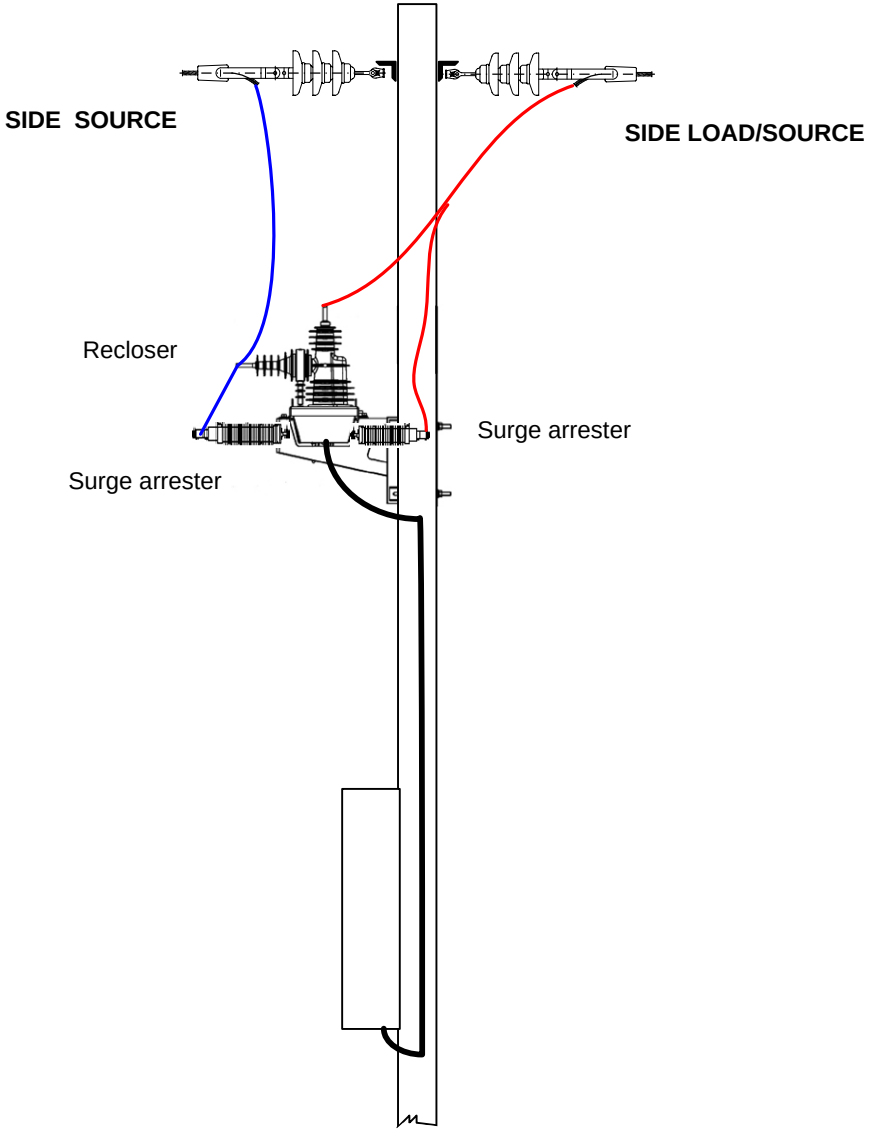

Ministry of Energy and Water decon DEUTSCHE ENERGIE-CONSULT INGENIEURGESELLSCHAFT mbH	RECLOSER WITHOUT BY-PASS SWITCH		Drawing:
Rehabilitation and Extension of Kabul City Distribution Network	Date: December 2004	Revision: 1	Scale: Without	U	PR-02

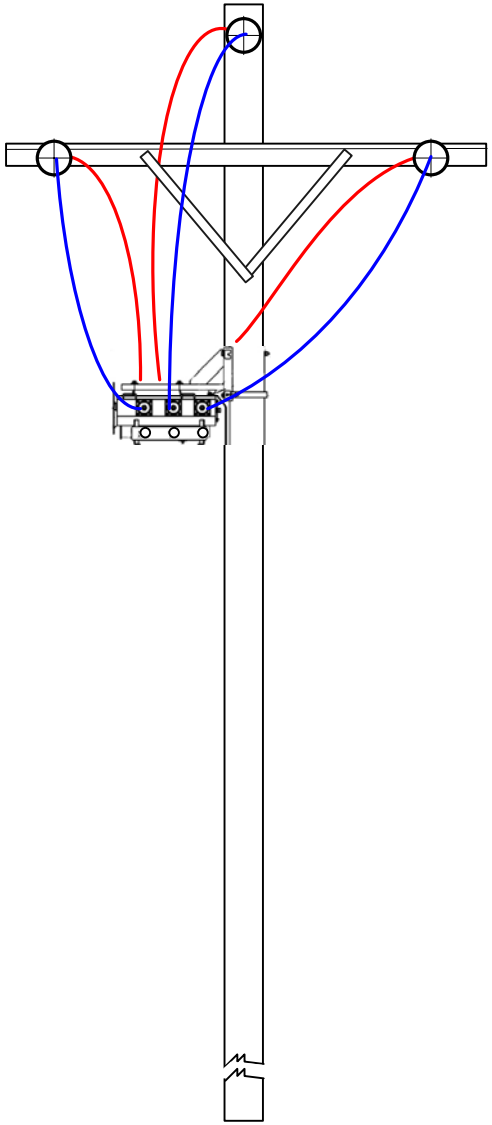

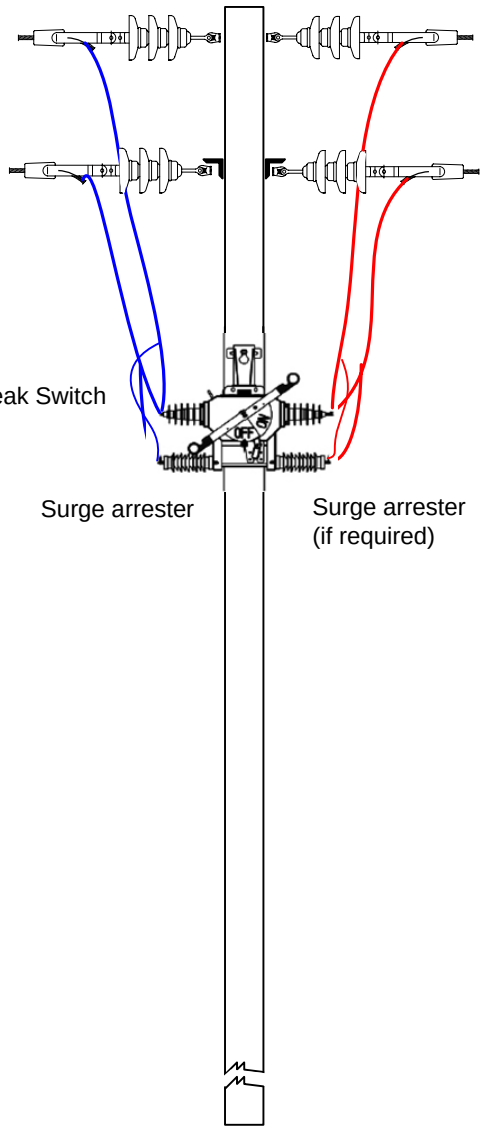

Ministry of Energy and Water decon DEUTSCHE ENERGIE-CONSULT INGENIEURGESELLSCHAFT mbH	Load Break Switch		Drawing:
Rehabilitation and Extension of Kabul City Distribution Network	Date: December 2004	Revision: 1	Scale: Without	U	PR-03

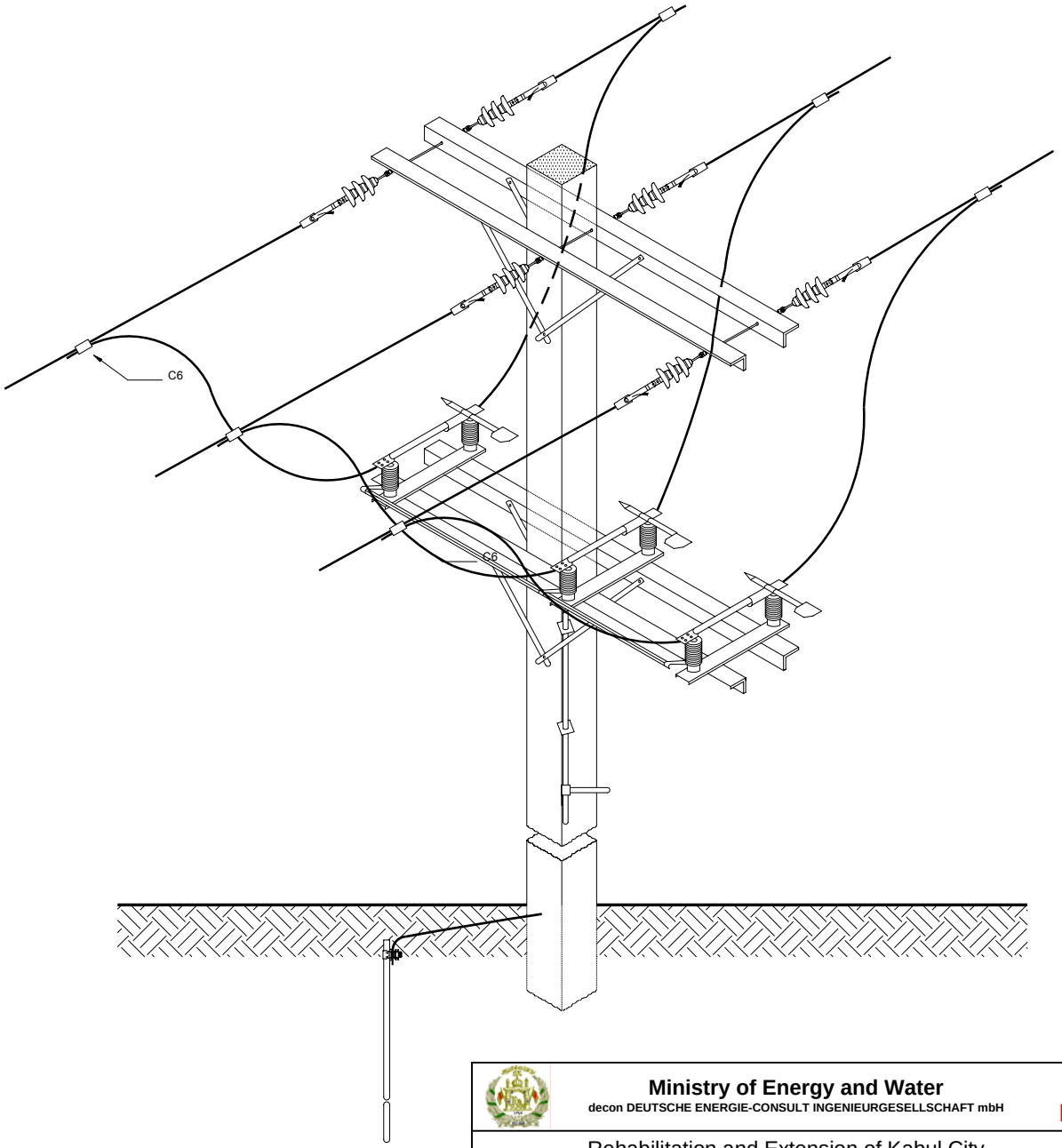

Ministry of Energy and Water

decon DEUTSCHE ENERGIE-CONSULT INGENIEURGESELLSCHAFT mbH

MWP

Rehabilitation and Extension of Kabul City Distribution Network

Single support on cross arm
Disconnecting Switch

Drawing:

Date: December 2004	Revision: 1	Scale: Without	U	PR-04

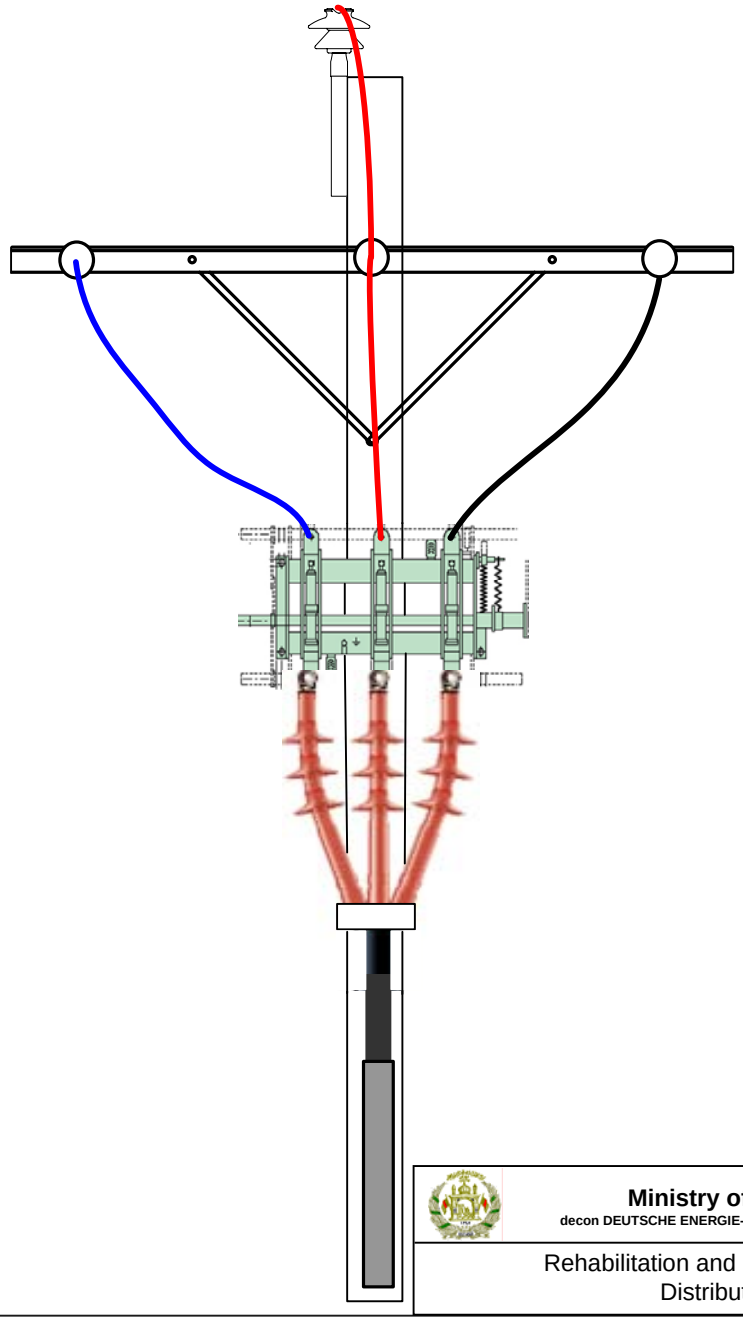

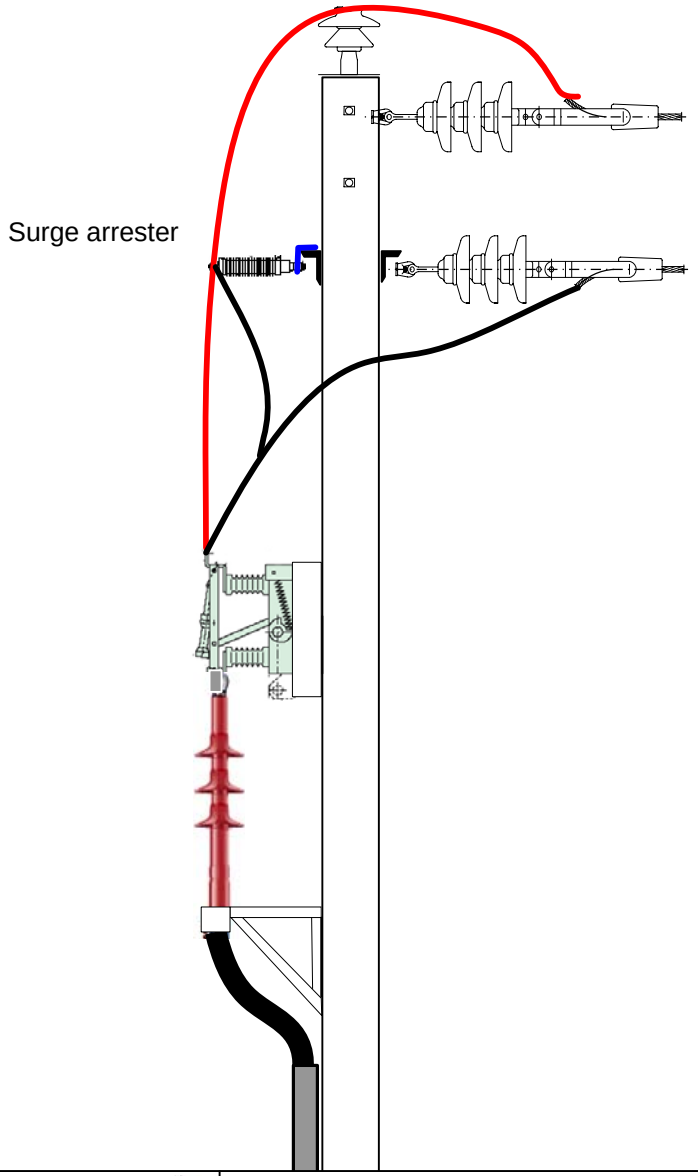

Ministry of Energy and Water

decon DEUTSCHE ENERGIE-CONSULT INGENIEURGESELLSCHAFT mbH

MWP

Rehabilitation and Extension of Kabul City Distribution Network

Outgoing cable to overhead line

Drawing:

Date: December 2004 | Revision: 1 | Scale: Without

U

PR-05

M-001	Conduits installation
M-002	Pad-mounted Feeder Pillar and Meter box
M-003	Pole-mounted Meter box

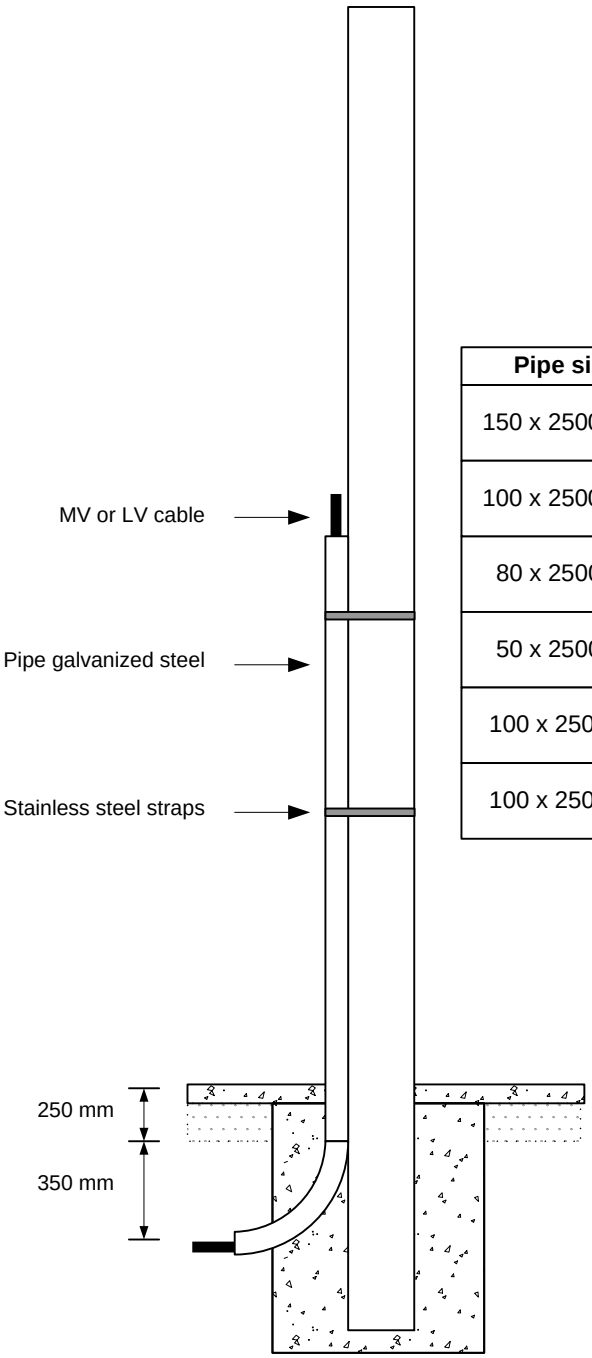

Pipe size	Destination
150 x 2500 mm	For LV Cable – pole mounted transformer 400 kVA 6 (1 x 240 mm2 NYY) + 1 x 120 mm2 NYY
100 x 2500 mm	For LV Cable – pole mounted transformer 250 kVA 3 (1 x 120 mm2 NYY) + 1 x 120 mm2 NYY
80 x 2500 mm	For LV Cable – OHL to feeder pillars or meter boxes (4 x 150 mm2 NYCWY) or (4 x 120 mm2 NYCWY)
50 x 2500 mm	For LV Cable – OHL to feeder pillars or meter boxes (4 x 50 mm2 NYCWY)
100 x 2500 mm	For MV Cable 12/20 kV – Outgoing to OHL 3 (1 x 240 RM/25)
100 x 2500 mm	For MV Cable 12/20 kV – Outgoing to OHL 3 (1 x 120 RM/16)

Ministry of Energy and Water
decon DEUTSCHE ENERGIE-CONSULT INGENIEURGESELLSCHAFT mbH

Rehabilitation and Extension of Kabul City Distribution Network

Conduits installation

Date: December 2004 | Revision: 1 | Scale: Without

Drawing: U M-001

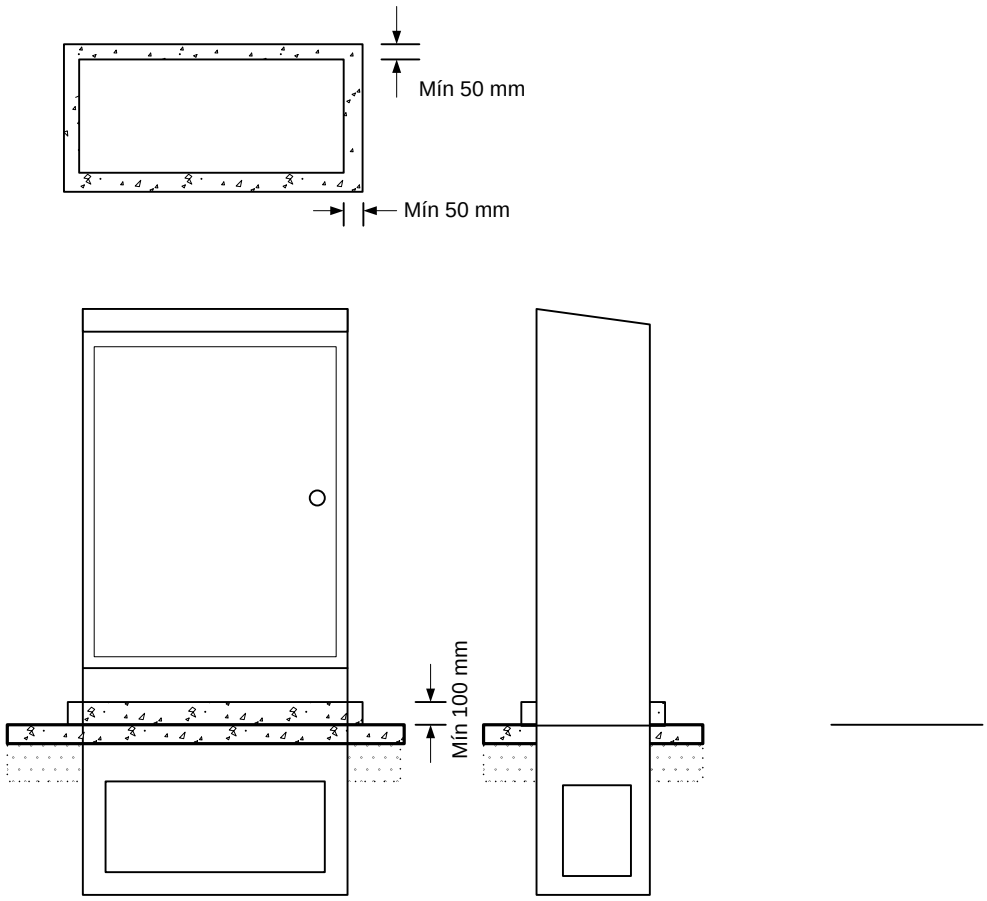

FEEDER PILLAR

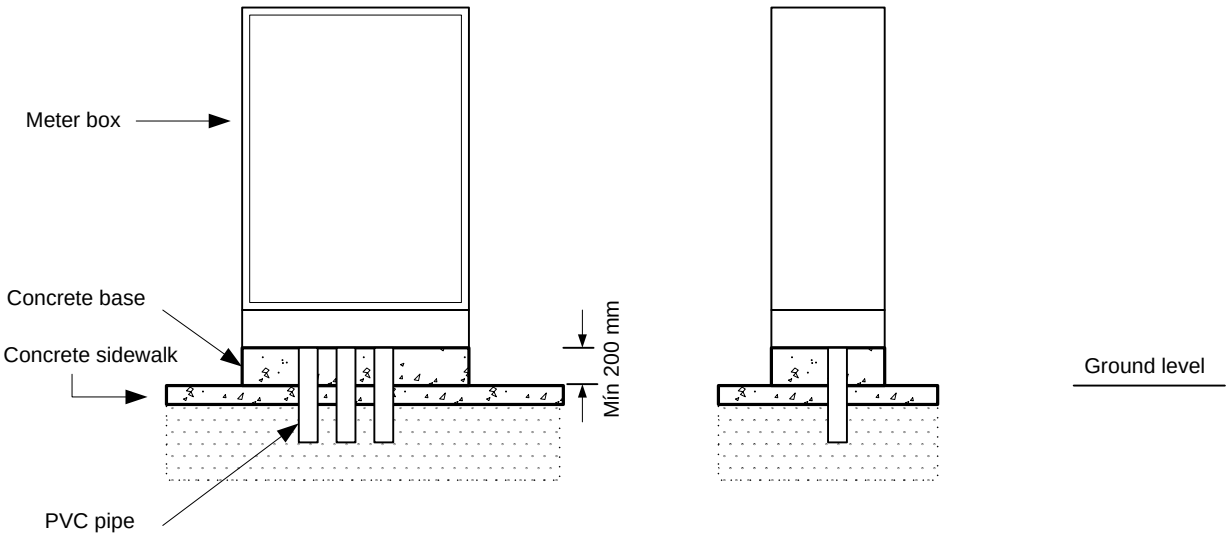

METER BOX

Ministry of Energy and Water decon DEUTSCHE ENERGIE-CONSULT INGENIEURGESELLSCHAFT mbH	Pad-mounted Feeder Pillar and Meter box			Drawing:
Rehabilitation and Extension of Kabul City Distribution Network	Date: December 2004	Revision: 1	Scale: Without	U M-002

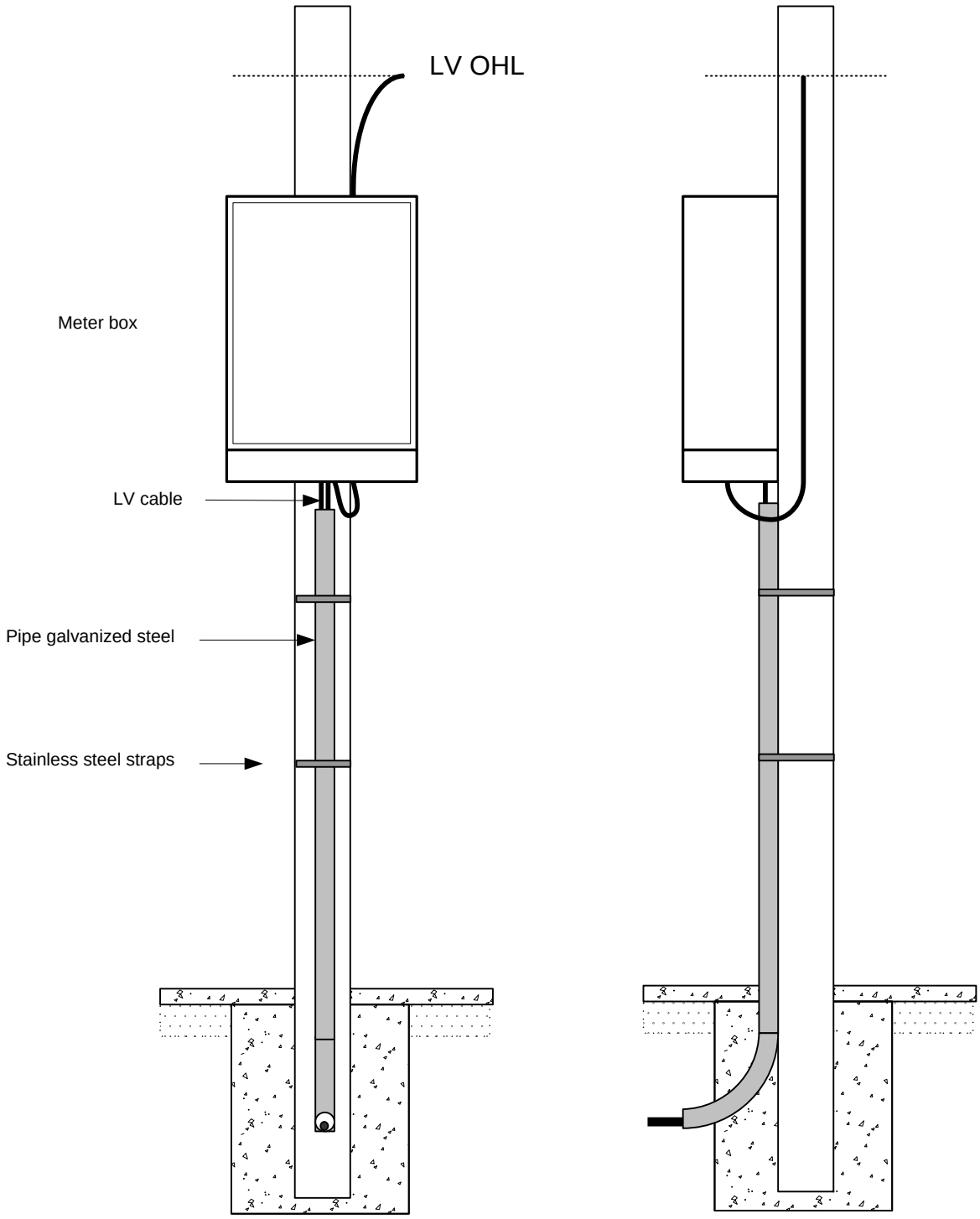

Ministry of Energy and Water decon DEUTSCHE ENERGIE-CONSULT INGENIEURGESELLSCHAFT mbH	Pole-mounted Meter box			Drawing:
Rehabilitation and Extension of Kabul City Distribution Network	Date: December 2004	Revision: 1	Scale: Without	U M-003

C-001 Table of Cable and Conductors Assignation

C-002 Weather case

C-003 Medium Voltage Conductors

C-004 Low Voltage Cable

TABLE OF CABLE AND CONDUCTORS ASSIGNATION

Cables and Conductors	Assigned to
Conductor ACSR 70/12 mm2	MV overhead line
Conductor ACSR 120/20 mm2	MV overhead line
Conductor ACSR 185/30 mm2	MV overhead line
Cable ABC 3 x50 Al + 1 x 70 Alloy	LV overhead line
Cable ABC 3 x95 Al + 1 x 70 Alloy	LV overhead line
Cable ABC 3 x120 Al + 1 x 70 Alloy	LV overhead line
Cable N2XS2Y 1 x 50 RM / 16, 12/20 kv	MV underground
Cable N2XS2Y 1 x 95 RM / 16, 12/20 kV	MV underground
Cable N2XS2Y 1 x 120 RM / 16, 12/20 kV	MV underground
Cable N2XS2Y 1 x 240 RM / 25, 12/20 kV	MV underground
Cable NYCWY 4 x 50 SM / 25 , 0.6/1 kV	LV board (CS, indoor transf.) to Feeder Pillars to meter boxes
Cable NYCWY 4 x 120 SM / 70, 0.6/1 kV	LV board (CS, indoor transf.) to Feeder Pillars to meter boxes
Cable NYCWY 4 x 150 SM / 70, 0.6/1 kV	LV board (CS, indoor transf.) to Feeder Pillars to meter boxes
Cables NYY-J 3 x 4 RE, 0.6/1 kV	Services Cables / Meter boxes to consumers
Cables NYY-J 3 x 6 RE, 0.6/1 kV	Services Cables / Meter boxes to consumers
Cables NYY-J 3 x 10 RE, 0.6/1 kV	Services Cables / Meter boxes to consumers
Cables NYY-J 3 x 16 RE, 0.6/1 kV	Services Cables / Meter boxes to consumers
Cables NYY-J 5 x 10 RE, 0.6/1 kV	Services Cables / Meter boxes to consumers
Cables NYY-J 5 x 16 RE, 0.6/1 kV	Services Cables / Meter boxes to consumers
Cables NYY-J 5 x 25 RM, 0.6/1 kV	Services Cables / Meter boxes to consumers
Cable NYY 1 x 120 RM, 0.6/1 kV	LV neutral transformer to Feeder Pillars
Cable NYY 1 x 240 RM, 0.6/1 kV	LV bushings transformer to Feeder Pillars
Conductor Cu 25 mm2 stranded / soft drawn	Earth system in LV and consumers
Conductor Cu 35 mm2 stranded / soft drawn	Earth system in MV (pole to cross arm, earth rod, etc)
Conductor Cu 35 mm2 stranded / mediun hard drawn	OHL to transformers or capacitors banks

Weather case (hypothesis of calculation)

Case	Temperature ºC	Ice thickness (cm)	Wind (km/h)
1. EDS (Every day stress)	25	0.0	0
2. Cold	-10	0.0	0
3. Cold + ice	-10	0.5	0
4. Cold + ice + wind	-10	0.5	40
5. Máx wind	15	0.0	120
6. Hot	40	0.0	0
7. Hot (*)	70	0.0	0

(*) Only for MV

MV overhead line

Conductor ACSR 70/12 mm2
Conductor ACSR 120/20 mm2
Conductor ACSR 185/30 mm2

LV overhead line

Cable ABC 3 x50 Al + 1 x 70 Alloy
Cable ABC 3 x95 Al + 1 x 70 Alloy
Cable ABC 3 x120 Al + 1 x 70 Alloy

Ministry of Energy and Water **decon DEUTSCHE ENERGIE-CONSULT INGENIEURGESELLSCHAFT mbH** MWP	Medium Voltage Conductors			Drawing:	
Rehabilitation and Extension of Kabul City Distribution Network	Date: December 2004	Revision: 1	Scale: Without	**U**	**C-003**

PLS-CADD Version 5.08L 9:24:21 AM Saturday, January 15, 2005
Decon
Project Name: 'c:\pls\pls_cadd\examples\projects\mv_new_kabul.LOA'

Weather Cases

#	Description	Wind Vel (m/s)	Wind Pres (Pa)	Ice Thick (cm)	Ice Density (daN/dm^3)	Ice Load (daN/m)	Temp (deg C)	Weather Load Factor	NESC Constant (daN/m)	Wind Height Adjust.	Conductor GRF	Structure GRF
1	Kabul 25	0	0.0	0.00	0.000	0.00	25	1.00	0.00	None	1	1
2	kabul -10	0	0.0	0.00	0.000	0.00	-10	1.00	0.00	None	1	1
3	kabul -10 + ice	0	0.0	0.50	0.800	0.00	-10	1.00	0.00	None	1	1
4	kabul -10 + ice	11	75.7	0.50	0.800	0.00	-10	1.00	0.00	None	1	1
5	kabul +15 + win	33	681.0	0.00	0.000	0.00	15	1.00	0.00	None	1	1
6	kabul + 40	0	0.0	0.00	0.000	0.00	40	1.00	0.00	None	1	1
7	kabul +70	0	0.0	0.00	0.000	0.00	70	1.00	0.00	None	1	1

Weather case for final after creep Kabul 25
Weather case for final after load kabul +15 + wind 120
ASCE terrain category B

Maximum tensions calculated using actual section geometry

Cable Tension Criteria

LC #	WC #	Weather case Description	Cable Condition	Allowable %Ultimate	Maximum Tension (daN)	Maximum Catenary (m)	Applicable Cable
1	1	Kabul 25	Initial RS	18.000	0.000	0.000	ALL CABLES
2	5	kabul +15 + win	Load RS	33.000	0.000	0.000	ALL CABLES
3	4	kabul -10 + ice	Load RS	33.000	0.000	0.000	ALL CABLES

Automatic Sagging Criteria

LC #	WC #	Weather case Description	Cable Condition	Allowable %Ultimate	Maximum Tension (daN)	Maximum Catenary (m)	Applicable Cable
1	1	Kabul 25	Initial RS	12.000	0.000	0.000	ALL CABLES

Ruling Span Sag Tension Report

Section #1 '185/30'
Cable 'c:\pls\pls_cadd\examples\cables\180-30 acsr', Ruling span (m) 45
Sagging data: Catenary (m) 474.618 Condition I Temperature (deg C) 25
Weather case for final after creep Kabul 25
Weather case for final after load kabul +15 + wind 120

+- WEATHER CASE -+	+-CABLE LOAD-+			+- R.S. INITIAL COND. -+					+- R.S. FINAL COND. -+ AFTER CREEP					+- R.S. FINAL COND. -+ AFTER LOAD				
# DESCRIPTION	HOR. LOAD +- (daN/m)	VERT LOAD -+	RES. LOAD	MAX. TENS. (daN)	HORI. TENS. (daN)	% UL	C (m)	R.S. SAG (m)	MAX. TENS. (daN)	HORI. TENS. (daN)	% UL	C (m)	R.S. SAG (m)	MAX. TENS. (daN)	HORI. TENS. (daN)	% UL	C (m)	R.S. SAG (m)
1 Kabul 25	0.00	0.73	0.73	345	345	5	475	0.53	345	345	5	475	0.53	345	345	5	475	0.53
2 kabul -10	0.00	0.73	0.73	906	906	14	1247	0.20	906	906	14	1247	0.20	906	906	14	1247	0.20
3 kabul -10 + ice	0.00	1.03	1.03	973	973	15	946	0.27	973	973	15	946	0.27	973	973	15	946	0.27
4 kabul -10 + ice	0.22	1.03	1.05	978	978	15	930	0.27	978	978	15	930	0.27	978	978	15	930	0.27
5 kabul +15 + win	1.29	0.73	1.48	688	687	10	463	0.55	688	687	10	463	0.55	688	687	10	463	0.55
6 kabul + 40	0.00	0.73	0.73	270	270	4	371	0.68	270	270	4	371	0.68	270	270	4	371	0.68
7 kabul +70	0.00	0.73	0.73	199	198	3	273	0.93	199	198	3	273	0.93	199	198	3	273	0.93

Ruling Span Sag Tension Report

Section #2 '120/20'
Cable 'c:\pls\pls_cadd\examples\cables\120-20 acsr', Ruling span (m) 45
Sagging data: Catenary (m) 620.347 Condition I Temperature (deg C) 25
Weather case for final after creep Kabul 25
Weather case for final after load kabul +15 + wind 120

+- WEATHER CASE -+	+-CABLE LOAD-+			+- R.S. INITIAL COND. -+					+- R.S. FINAL COND. -+ AFTER CREEP					+- R.S. FINAL COND. -+ AFTER LOAD				
# DESCRIPTION	HOR. LOAD +- (daN/m)	VERT LOAD -+	RES. LOAD	MAX. TENS. (daN)	HORI. TENS. (daN)	% UL	C (m)	R.S. SAG (m)	MAX. TENS. (daN)	HORI. TENS. (daN)	% UL	C (m)	R.S. SAG (m)	MAX. TENS. (daN)	HORI. TENS. (daN)	% UL	C (m)	R.S. SAG (m)
1 Kabul 25	0.00	0.48	0.48	300	300	7	620	0.41	300	300	7	620	0.41	300	300	7	620	0.41
2 kabul -10	0.00	0.48	0.48	814	814	18	1683	0.15	814	814	18	1683	0.15	814	814	18	1683	0.15
3 kabul -10 + ice	0.00	0.74	0.74	852	851	19	1149	0.22	852	851	19	1149	0.22	852	851	19	1149	0.22
4 kabul -10 + ice	0.19	0.74	0.77	855	855	19	1116	0.23	855	855	19	1116	0.23	855	855	19	1116	0.23
5 kabul +15 + win	1.06	0.48	1.16	606	605	13	521	0.49	606	605	13	521	0.49	606	605	13	521	0.49
6 kabul + 40	0.00	0.48	0.48	216	215	5	445	0.57	216	215	5	445	0.57	216	215	5	445	0.57
7 kabul +70	0.00	0.48	0.48	146	146	3	301	0.84	146	146	3	301	0.84	146	146	3	301	0.84

Ruling Span Sag Tension Report

Section #3 '70/12'
Cable 'c:\pls\pls_cadd\examples\cables\70-12 acsr', Ruling span (m) 45
Sagging data: Catenary (m) 717.875 Condition I Temperature (deg C) 25
Weather case for final after creep Kabul 25
Weather case for final after load kabul +15 + wind 120

#	WEATHER CASE DESCRIPTION	CABLE LOAD HOR. LOAD (daN/m)	VERT LOAD	RES. LOAD	R.S. INITIAL COND. MAX. TENS. (daN)	HORI. TENS. (daN)	% UL	C (m)	R.S. SAG (m)	R.S. FINAL COND. AFTER CREEP MAX. TENS. (daN)	HORI. TENS. (daN)	% UL	C (m)	R.S. SAG (m)	R.S. FINAL COND. AFTER LOAD MAX. TENS. (daN)	HORI. TENS. (daN)	% UL	C (m)	R.S. SAG (m)
1	Kabul 25	0.00	0.28	0.28	201	200	7	719	0.35	201	200	7	719	0.35	201	200	7	719	0.35
2	kabul -10	0.00	0.28	0.28	527	527	20	1890	0.13	527	527	20	1890	0.13	527	527	20	1890	0.13
3	kabul -10 + ice	0.00	0.49	0.49	553	553	21	1132	0.22	553	553	21	1132	0.22	553	553	21	1132	0.22
4	kabul -10 + ice	0.16	0.49	0.52	557	557	21	1081	0.23	557	557	21	1081	0.23	557	557	21	1081	0.23
5	kabul +15 + win	0.80	0.28	0.84	425	425	16	503	0.50	425	425	16	503	0.50	425	425	16	503	0.50
6	kabul + 40	0.00	0.28	0.28	138	137	5	493	0.51	138	137	5	493	0.51	138	137	5	493	0.51
7	kabul +70	0.00	0.28	0.28	89	88	3	318	0.80	89	88	3	318	0.80	89	88	3	318	0.80

Ruling Span Sag Tension Report

Section #4 '185/30'
Cable 'c:\pls\pls_cadd\examples\cables\180-30 acsr', Ruling span (m) 60
Sagging data: Catenary (m) 819.92 Condition I Temperature (deg C) 25
Weather case for final after creep Kabul 25
Weather case for final after load kabul +15 + wind 120

#	WEATHER CASE DESCRIPTION	CABLE LOAD HOR. LOAD (daN/m)	VERT LOAD	RES. LOAD	R.S. INITIAL COND. MAX. TENS. (daN)	HORI. TENS. (daN)	% UL	C (m)	R.S. SAG (m)	R.S. FINAL COND. AFTER CREEP MAX. TENS. (daN)	HORI. TENS. (daN)	% UL	C (m)	R.S. SAG (m)	R.S. FINAL COND. AFTER LOAD MAX. TENS. (daN)	HORI. TENS. (daN)	% UL	C (m)	R.S. SAG (m)
1	Kabul 25	0.00	0.73	0.73	596	596	9	820	0.55	596	596	9	820	0.55	596	596	9	820	0.55
2	kabul -10	0.00	0.73	0.73	1386	1386	21	1907	0.24	1386	1386	21	1907	0.24	1386	1386	21	1907	0.24
3	kabul -10 + ice	0.00	1.03	1.03	1443	1443	22	1403	0.32	1443	1443	22	1403	0.32	1443	1443	22	1403	0.32
4	kabul -10 + ice	0.22	1.03	1.05	1448	1448	22	1377	0.33	1448	1448	22	1377	0.33	1448	1448	22	1377	0.33
5	kabul +15 + win	1.29	0.73	1.48	1042	1041	16	702	0.64	1042	1041	16	702	0.64	1042	1041	16	702	0.64
6	kabul + 40	0.00	0.73	0.73	440	439	7	604	0.74	440	439	7	604	0.74	440	439	7	604	0.74
7	kabul +70	0.00	0.73	0.73	299	298	5	410	1.10	299	298	5	410	1.10	299	298	5	410	1.10

Ruling Span Sag Tension Report

Section #5 '120/20'
Cable 'c:\pls\pls_cadd\examples\cables\120-20 acsr', Ruling span (m) 60
Sagging data: Catenary (m) 847.808 Condition I Temperature (deg C) 25
Weather case for final after creep Kabul 25
Weather case for final after load kabul +15 + wind 120

#	DESCRIPTION	HOR. LOAD (daN/m)	VERT LOAD	RES. LOAD	MAX. TENS. (daN)	HORI. TENS. (daN)	% UL	C (m)	R.S. INITIAL COND. SAG (m)	MAX. TENS. (daN)	HORI. TENS. (daN)	% UL	C (m)	R.S. FINAL COND. AFTER CREEP SAG (m)	MAX. TENS. (daN)	HORI. TENS. (daN)	% UL	C (m)	R.S. FINAL COND. AFTER LOAD SAG (m)
1	Kabul 25	0.00	0.48	0.48	410	410	9	847	0.53	410	410	9	847	0.53	410	410	9	847	0.53
2	kabul -10	0.00	0.48	0.48	947	947	21	1957	0.23	947	947	21	1957	0.23	947	947	21	1957	0.23
3	kabul -10 + ice	0.00	0.74	0.74	994	994	22	1341	0.34	994	994	22	1341	0.34	994	994	22	1341	0.34
4	kabul -10 + ice	0.19	0.74	0.77	999	999	22	1304	0.34	999	999	22	1304	0.34	999	999	22	1304	0.34
5	kabul +15 + win	1.06	0.48	1.16	766	765	17	659	0.68	766	765	17	659	0.68	766	765	17	659	0.68
6	kabul + 40	0.00	0.48	0.48	300	300	7	620	0.73	300	300	7	620	0.73	300	300	7	620	0.73
7	kabul +70	0.00	0.48	0.48	202	201	4	416	1.08	202	201	4	416	1.08	202	201	4	416	1.08

Ruling Span Sag Tension Report

Section #6 '70/12'
Cable 'c:\pls\pls_cadd\examples\cables\70-12 acsr', Ruling span (m) 60
Sagging data: Catenary (m) 865.039 Condition I Temperature (deg C) 25
Weather case for final after creep Kabul 25
Weather case for final after load kabul +15 + wind 120

#	DESCRIPTION	HOR. LOAD (daN/m)	VERT LOAD	RES. LOAD	MAX. TENS. (daN)	HORI. TENS. (daN)	% UL	C (m)	R.S. INITIAL COND. SAG (m)	MAX. TENS. (daN)	HORI. TENS. (daN)	% UL	C (m)	R.S. FINAL COND. AFTER CREEP SAG (m)	MAX. TENS. (daN)	HORI. TENS. (daN)	% UL	C (m)	R.S. FINAL COND. AFTER LOAD SAG (m)
1	Kabul 25	0.00	0.28	0.28	241	241	9	865	0.52	241	241	9	865	0.52	241	241	9	865	0.52
2	kabul -10	0.00	0.28	0.28	554	554	21	1988	0.23	554	554	21	1988	0.23	554	554	21	1988	0.23
3	kabul -10 + ice	0.00	0.49	0.49	594	594	22	1216	0.37	594	594	22	1216	0.37	594	594	22	1216	0.37
4	kabul -10 + ice	0.16	0.49	0.52	599	599	22	1162	0.39	599	599	22	1162	0.39	599	599	22	1162	0.39
5	kabul +15 + win	0.80	0.28	0.84	502	501	19	593	0.76	502	501	19	593	0.76	502	501	19	593	0.76
6	kabul + 40	0.00	0.28	0.28	176	175	7	629	0.72	176	175	7	629	0.72	176	175	7	629	0.72
7	kabul +70	0.00	0.28	0.28	117	117	4	419	1.07	117	117	4	419	1.07	117	117	4	419	1.07

Check Section Report

Section #1 '185/30'
Cable 'c:\pls\pls_cadd\examples\cables\180-30 acsr', Ruling span (m) 45
Sagging data: Catenary (m) 474.618 Condition I Temperature (deg C) 25
Weather case for final after creep Kabul 25
Weather case for final after load kabul +15 + wind 120

LC #	WEATHER CASE DESCRIPTION	CONDITION	ALLOWABLE % OF ULTIMATE	ACTUAL % OF ULTIMATE	ALLOWABLE TENSION (daN)	ACTUAL TENSION (daN)	ALLOWABLE CATENARY (m)	ACTUAL CATENARY (m)	% OF ALLOWABLE CAPACITY	
1	Kabul 25	Initial RS	18.0	5.2	NA	345.3	NA	474.5	29.0	OK
5	kabul +15 + win	Load RS	33.0	10.4	NA	687.8	NA	462.9	31.5	OK
4	kabul -10 + ice	Load RS	33.0	14.8	NA	978.3	NA	930.0	44.8	OK

Check Section Report

Section #2 '120/20'
Cable 'c:\pls\pls_cadd\examples\cables\120-20 acsr', Ruling span (m) 45
Sagging data: Catenary (m) 620.347 Condition I Temperature (deg C) 25
Weather case for final after creep Kabul 25
Weather case for final after load kabul +15 + wind 120

LC #	WEATHER CASE DESCRIPTION	CONDITION	ALLOWABLE % OF ULTIMATE	ACTUAL % OF ULTIMATE	ALLOWABLE TENSION (daN)	ACTUAL TENSION (daN)	ALLOWABLE CATENARY (m)	ACTUAL CATENARY (m)	% OF ALLOWABLE CAPACITY	
1	Kabul 25	Initial RS	18.0	6.6	NA	299.9	NA	619.8	36.5	OK
5	kabul +15 + win	Load RS	33.0	13.3	NA	605.7	NA	521.2	40.2	OK
4	kabul -10 + ice	Load RS	33.0	18.7	NA	854.9	NA	1116.0	56.7	OK

Check Section Report

Section #3 '70/12'
Cable 'c:\pls\pls_cadd\examples\cables\70-12 acsr', Ruling span (m) 45
Sagging data: Catenary (m) 717.875 Condition I Temperature (deg C) 25
Weather case for final after creep Kabul 25
Weather case for final after load kabul +15 + wind 120

LC #	WEATHER CASE DESCRIPTION	CONDITION	ALLOWABLE % OF ULTIMATE	ACTUAL % OF ULTIMATE	ALLOWABLE TENSION (daN)	ACTUAL TENSION (daN)	ALLOWABLE CATENARY (m)	ACTUAL CATENARY (m)	% OF ALLOWABLE CAPACITY	
1	Kabul 25	Initial RS	18.0	7.5	NA	200.5	NA	719.4	41.6	OK

5	kabul +15 + win	Load RS	33.0	15.9	NA	425.0	NA	503.0	48.1 OK
4	kabul -10 + ice	Load RS	33.0	20.8	NA	557.0	NA	1080.7	63.0 OK

Check Section Report

Section #4 '185/30'
Cable 'c:\pls\pls_cadd\examples\cables\180-30 acsr', Ruling span (m) 60
Sagging data: Catenary (m) 819.92 Condition I Temperature (deg C) 25
Weather case for final after creep Kabul 25
Weather case for final after load kabul +15 + wind 120

LC #	WEATHER CASE DESCRIPTION	CONDITION	ALLOWABLE % OF ULTIMATE	ACTUAL % OF ULTIMATE	ALLOWABLE TENSION (daN)	ACTUAL TENSION (daN)	ALLOWABLE CATENARY (m)	ACTUAL CATENARY (m)	% OF ALLOWABLE CAPACITY
1	Kabul 25	Initial RS	18.0	9.0	NA	596.3	NA	819.7	50.0 OK
5	kabul +15 + win	Load RS	33.0	15.7	NA	1042.4	NA	701.5	47.7 OK
4	kabul -10 + ice	Load RS	33.0	21.9	NA	1448.2	NA	1376.6	66.3 OK

Check Section Report

Section #5 '120/20'
Cable 'c:\pls\pls_cadd\examples\cables\120-20 acsr', Ruling span (m) 60
Sagging data: Catenary (m) 847.808 Condition I Temperature (deg C) 25
Weather case for final after creep Kabul 25
Weather case for final after load kabul +15 + wind 120

LC #	WEATHER CASE DESCRIPTION	CONDITION	ALLOWABLE % OF ULTIMATE	ACTUAL % OF ULTIMATE	ALLOWABLE TENSION (daN)	ACTUAL TENSION (daN)	ALLOWABLE CATENARY (m)	ACTUAL CATENARY (m)	% OF ALLOWABLE CAPACITY
1	Kabul 25	Initial RS	18.0	9.0	NA	410.1	NA	847.2	49.9 OK
5	kabul +15 + win	Load RS	33.0	16.8	NA	765.8	NA	658.7	50.8 OK
4	kabul -10 + ice	Load RS	33.0	21.9	NA	999.5	NA	1304.5	66.3 OK

Check Section Report

Section #6 '70/12'
Cable 'c:\pls\pls_cadd\examples\cables\70-12 acsr', Ruling span (m) 60
Sagging data: Catenary (m) 865.039 Condition I Temperature (deg C) 25
Weather case for final after creep Kabul 25
Weather case for final after load kabul +15 + wind 120

LC #	WEATHER CASE DESCRIPTION	CONDITION	ALLOWABLE % OF ULTIMATE	ACTUAL % OF ULTIMATE	ALLOWABLE TENSION (daN)	ACTUAL TENSION (daN)	ALLOWABLE CATENARY (m)	ACTUAL CATENARY (m)	% OF ALLOWABLE CAPACITY	
1	Kabul 25	Initial RS	18.0	9.0	NA	241.1	NA	864.8	50.0	OK
5	kabul +15 + win	Load RS	33.0	18.7	NA	501.5	NA	593.2	56.7	OK
4	kabul -10 + ice	Load RS	33.0	22.4	NA	599.1	NA	1162.1	67.7	OK

Ministry of Energy and Water decon DEUTSCHE ENERGIE-CONSULT INGENIEURGESELLSCHAFT mbH MWP	Low Voltage Cable			Drawing:	
Rehabilitation and Extension of Kabul City Distribution Network	Date: December 2004	Revision: 1	Scale: Without	**U**	**C-004**

PLS-CADD Version 5.08L 9:31:36 AM Saturday, January 15, 2005
Decon
Project Name: 'c:\pls\pls_cadd\examples\projects\new lv-kabul.CRI'

Weather Cases

#	Description	Wind Vel (m/s)	Wind Pres (Pa)	Ice Thick (cm)	Ice Density (daN/dm^3)	Ice Load (daN/m)	Temp (deg C)	Weather Load Factor	NESC Constant (daN/m)	Wind Height Adjust.	Conductor GRF	Structure GRF
1	Kabul 25	0	0.0	0.00	0.000	0.00	25	1.00	0.00	None	1	1
2	kabul -10	0	0.0	0.00	0.000	0.00	-10	1.00	0.00	None	1	1
3	kabul -10 + ice	0	0.0	0.50	0.800	0.00	-10	1.00	0.00	None	1	1
4	kabul -10 + ice	11	75.7	0.50	0.800	0.00	-10	1.00	0.00	None	1	1
5	kabul +15 + win	33	681.0	0.00	0.000	0.00	15	1.00	0.00	None	1	1
6	kabul + 40	0	0.0	0.00	0.000	0.00	40	1.00	0.00	None	1	1

Weather case for final after creep Kabul 25
Weather case for final after load kabul +15 + wind 120
ASCE terrain category B

Maximum tensions calculated using actual section geometry

Cable Tension Criteria

LC #	WC #	Weather case Description	Cable Condition	Allowable %Ultimate	Maximum Tension (daN)	Maximum Catenary (m)	Applicable Cable
1	1	Kabul 25	Initial RS	18.000	0.000	0.000	ALL CABLES
2	5	kabul +15 + win	Load RS	33.000	0.000	0.000	ALL CABLES
3	4	kabul -10 + ice	Load RS	33.000	0.000	0.000	ALL CABLES

Automatic Sagging Criteria

LC #	WC #	Weather case Description	Cable Condition	Allowable %Ultimate	Maximum Tension (daN)	Maximum Catenary (m)	Applicable Cable
1	1	Kabul 25	Initial RS	12.000	0.000	0.000	ALL CABLES

Ruling Span Sag Tension Report

Section #1 'LV 4/0 Quadruplex'
Cable 'c:\pls\pls_cadd\examples\cables\cables_library\multiplex\appaloosa_xlp_quadruplex.wir', Ruling span (m) 45
Sagging data: Catenary (m) 322.304 Condition I Temperature (deg C) 25
Weather case for final after creep Kabul 25
Weather case for final after load kabul +15 + wind 120

#	WEATHER CASE DESCRIPTION	CABLE LOAD HOR. LOAD (daN/m)	VERT LOAD	RES. LOAD	R.S. INITIAL COND. MAX. TENS. (daN)	HORI. TENS. (daN)	% UL	C (m)	R.S. SAG (m)	R.S. FINAL COND. AFTER CREEP MAX. TENS. (daN)	HORI. TENS. (daN)	% UL	C (m)	R.S. SAG (m)	R.S. FINAL COND. AFTER LOAD MAX. TENS. (daN)	HORI. TENS. (daN)	% UL	C (m)	R.S. SAG (m)
1	Kabul 25	0.00	1.55	1.55	501	500	13	322	0.79	451	450	12	290	0.87	478	477	13	307	0.82
2	kabul -10	0.00	1.55	1.55	692	691	19	445	0.57	626	625	17	403	0.63	682	681	18	439	0.58
3	kabul -10 + ice	0.00	2.09	2.09	803	802	22	384	0.66	754	753	20	360	0.70	803	802	22	384	0.66
4	kabul -10 + ice	0.36	2.09	2.12	809	808	22	381	0.66	761	760	20	358	0.71	809	808	22	381	0.66
5	kabul +15 + win	2.58	1.55	3.01	845	842	23	280	0.91	808	805	22	268	0.95	845	842	23	280	0.91
6	kabul + 40	0.00	1.55	1.55	448	446	12	288	0.88	406	404	11	261	0.97	427	425	11	274	0.92

#	WEATHER CASE DESCRIPTION	INITIAL CONDITION HORIZ. TENSION (daN) TOTAL	CORE	OUTER	FINAL AFTER CREEP HORIZ. TENSION (daN) TOTAL	CORE	OUTER	FINAL AFTER LOAD HORIZ. TENSION (daN) TOTAL	CORE	OUTER
1	Kabul 25	500	223	277	450	286	163	477	244	233
2	kabul -10	691	228	463	625	258	366	681	226	455
3	kabul -10 + ice	802	277	524	753	304	449	802	277	524
4	kabul -10 + ice	808	280	528	760	306	453	808	280	528
5	kabul +15 + win	842	348	494	805	387	418	842	348	494
6	kabul + 40	446	234	212	404	309	95	425	264	161

Ruling Span Sag Tension Report

Section #2 'LV 4/0 Quadruplex'
Cable 'c:\pls\pls_cadd\examples\cables\cables_library\multiplex\appaloosa_xlp_quadruplex.wir', Ruling span (m) 40
Sagging data: Catenary (m) 322.304 Condition I Temperature (deg C) 25
Weather case for final after creep Kabul 25
Weather case for final after load kabul +15 + wind 120

#	WEATHER CASE DESCRIPTION	CABLE LOAD HOR. LOAD (daN/m)	VERT LOAD	RES. LOAD	R.S. INITIAL COND. MAX. TENS. (daN)	HORI. TENS. (daN)	% UL	C (m)	R.S. SAG (m)	R.S. FINAL COND. AFTER CREEP MAX. TENS. (daN)	HORI. TENS. (daN)	% UL	C (m)	R.S. SAG (m)	R.S. FINAL COND. AFTER LOAD MAX. TENS. (daN)	HORI. TENS. (daN)	% UL	C (m)	R.S. SAG (m)
1	Kabul 25	0.00	1.55	1.55	501	500	13	322	0.62	443	442	12	285	0.70	475	474	13	306	0.65
2	kabul -10	0.00	1.55	1.55	728	728	20	469	0.43	656	655	18	422	0.47	725	724	20	467	0.43
3	kabul -10 + ice	0.00	2.09	2.09	824	822	22	394	0.51	771	770	21	368	0.54	824	822	22	394	0.51
4	kabul -10 + ice	0.36	2.09	2.12	829	828	22	390	0.51	777	776	21	366	0.55	829	828	22	390	0.51
5	kabul +15 + win	2.58	1.55	3.01	829	826	22	275	0.73	787	784	21	261	0.77	829	826	22	275	0.73
6	kabul + 40	0.00	1.55	1.55	439	437	12	282	0.71	392	391	11	252	0.79	415	414	11	267	0.75

#	WEATHER CASE DESCRIPTION	INITIAL CONDITION HORIZ. TENSION (daN) TOTAL	CORE	OUTER	FINAL AFTER CREEP HORIZ. TENSION (daN) TOTAL	CORE	OUTER	FINAL AFTER LOAD HORIZ. TENSION (daN) TOTAL	CORE	OUTER
1	Kabul 25	500	223	277	442	282	160	474	242	232
2	kabul -10	728	244	483	655	267	387	724	240	484
3	kabul -10 + ice	822	287	536	770	308	462	822	287	536
4	kabul -10 + ice	828	289	539	776	310	465	828	289	539
5	kabul +15 + win	826	341	485	784	378	406	826	341	485
6	kabul + 40	437	231	207	391	302	88	414	259	155

Ruling Span Sag Tension Report

Section #3 'LV 4/0 Quadruplex'
Cable 'c:\pls\pls_cadd\examples\cables\cables_library\multiplex\appaloosa_xlp_quadruplex.wir', Ruling span (m) 35
Sagging data: Catenary (m) 322.304 Condition I Temperature (deg C) 25
Weather case for final after creep Kabul 25
Weather case for final after load kabul +15 + wind 120

WEATHER CASE	CABLE LOAD			R.S. INITIAL COND.					R.S. FINAL COND. AFTER CREEP					R.S. FINAL COND. AFTER LOAD				
# DESCRIPTION	HOR. LOAD (daN/m)	VERT LOAD	RES. LOAD	MAX. TENS. (daN)	HORI. TENS. (daN)	% UL	C (m)	R.S. SAG (m)	MAX. TENS. (daN)	HORI. TENS. (daN)	% UL	C (m)	R.S. SAG (m)	MAX. TENS. (daN)	HORI. TENS. (daN)	% UL	C (m)	R.S. SAG (m)
1 Kabul 25	0.00	1.55	1.55	501	500	13	322	0.48	434	433	12	279	0.55	472	470	13	303	0.51
2 kabul -10	0.00	1.55	1.55	769	768	21	495	0.31	693	692	19	446	0.34	769	768	21	495	0.31
3 kabul -10 + ice	0.00	2.09	2.09	846	844	23	404	0.38	792	790	21	378	0.40	846	844	23	404	0.38
4 kabul -10 + ice	0.36	2.09	2.12	850	849	23	400	0.38	797	796	21	375	0.41	850	849	23	400	0.38
5 kabul +15 + win	2.58	1.55	3.01	810	807	22	268	0.57	763	760	21	253	0.61	810	807	22	268	0.57
6 kabul + 40	0.00	1.55	1.55	428	426	12	275	0.56	375	374	10	241	0.64	402	400	11	258	0.59

WEATHER CASE DESCRIPTION	INITIAL CONDITION HORIZ. TENSION (daN)			FINAL AFTER CREEP HORIZ. TENSION (daN)			FINAL AFTER LOAD HORIZ. TENSION (daN)		
	TOTAL	CORE	OUTER	TOTAL	CORE	OUTER	TOTAL	CORE	OUTER
1 Kabul 25	500	223	277	433	277	156	470	239	232
2 kabul -10	768	262	506	692	279	414	768	262	506
3 kabul -10 + ice	844	297	548	790	313	477	844	297	548
4 kabul -10 + ice	849	299	550	796	315	480	849	299	550
5 kabul +15 + win	807	332	474	760	367	393	807	332	474
6 kabul + 40	426	226	200	374	294	79	400	252	148

Check Section Report

Section #1 'LV 4/0 Quadruplex'
Cable 'c:\pls\pls_cadd\examples\cables\cables_library\multiplex\appaloosa_xlp_quadruplex.wir', Ruling span (m) 45
Sagging data: Catenary (m) 322.304 Condition I Temperature (deg C) 25
Weather case for final after creep Kabul 25
Weather case for final after load kabul +15 + wind 120

LC #	WEATHER CASE DESCRIPTION	CONDITION	ALLOWABLE % OF ULTIMATE	ACTUAL % OF ULTIMATE	ALLOWABLE TENSION (daN)	ACTUAL TENSION (daN)	ALLOWABLE CATENARY (m)	ACTUAL CATENARY (m)	% OF ALLOWABLE CAPACITY	
1	Kabul 25	Initial RS	18.0	13.5	NA	501.3	NA	322.4	75.0	OK
5	kabul +15 + win	Load RS	33.0	22.7	NA	844.5	NA	279.8	68.9	OK
4	kabul -10 + ice	Load RS	33.0	21.8	NA	809.3	NA	380.9	66.0	OK

Check Section Report

Section #2 'LV 4/0 Quadruplex'
Cable 'c:\pls\pls_cadd\examples\cables\cables_library\multiplex\appaloosa_xlp_quadruplex.wir', Ruling span (m) 40
Sagging data: Catenary (m) 322.304 Condition I Temperature (deg C) 25
Weather case for final after creep Kabul 25
Weather case for final after load kabul +15 + wind 120

LC #	WEATHER CASE DESCRIPTION	CONDITION	ALLOWABLE % OF ULTIMATE	ACTUAL % OF ULTIMATE	ALLOWABLE TENSION (daN)	ACTUAL TENSION (daN)	ALLOWABLE CATENARY (m)	ACTUAL CATENARY (m)	% OF ALLOWABLE CAPACITY	
1	Kabul 25	Initial RS	18.0	13.5	NA	501.4	NA	322.4	75.0	OK
5	kabul +15 + win	Load RS	33.0	22.3	NA	829.1	NA	274.7	67.6	OK
4	kabul -10 + ice	Load RS	33.0	22.3	NA	829.0	NA	390.2	67.6	OK

Check Section Report

Section #3 'LV 4/0 Quadruplex'
Cable 'c:\pls\pls_cadd\examples\cables\cables_library\multiplex\appaloosa_xlp_quadruplex.wir', Ruling span (m) 35
Sagging data: Catenary (m) 322.304 Condition I Temperature (deg C) 25
Weather case for final after creep Kabul 25
Weather case for final after load kabul +15 + wind 120

LC #	WEATHER CASE DESCRIPTION	CONDITION	ALLOWABLE % OF ULTIMATE	ACTUAL % OF ULTIMATE	ALLOWABLE TENSION (daN)	ACTUAL TENSION (daN)	ALLOWABLE CATENARY (m)	ACTUAL CATENARY (m)	% OF ALLOWABLE CAPACITY	
1	Kabul 25	Initial RS	18.0	13.5	NA	500.9	NA	322.1	74.9	OK
5	kabul +15 + win	Load RS	33.0	21.8	NA	809.5	NA	268.2	66.0	OK
4	kabul -10 + ice	Load RS	33.0	22.9	NA	850.2	NA	400.3	69.4	OK