SOLICITATION, OFFER, AND AWARD *(Construction, Alteration, or Repair)*	1. SOLICITATION NO. W5J9LE-12-R-0019	2. TYPE OF SOLICITATION [ ] SEALED BID (IFB) [X] NEGOTIATED *(RFP)*	3. DATE ISSUED 22-Nov-2011	PAGE OF PAGES 1 OF 83

IMPORTANT - The "offer" section on the reverse must be fully completed by offeror.

4. CONTRACT NO.	5. REQUISITION/PURCHASE REQUEST NO.	6. PROJECT NO. KLZT103000

7. ISSUED BY CODE W5J9LE	8. ADDRESS OFFER TO *(If Other Than Item 7)* CODE
AFGHANISTAN DISTRICT SOUTH (AES) US ARMY CORPS OF ENGINEERS APO AE 09355 TEL: FAX:	**See Item 7** TEL: FAX:

9. FOR INFORMATION CALL:	A. NAME RICHARD D HORTON	B. TELEPHONE NO. *(Include area code)* *(NO COLLECT CALLS)*

SOLICITATION

NOTE: In sealed bid solicitations "offer" and "offeror" mean "bid" and "bidder".

10. THE GOVERNMENT REQUIRES PERFORMANCE OF THE WORK DESCRIBED IN THESE DOCUMENTS*(Title, identifying no., date):*

AF - Special Operations Forces Helicopter Apron

Project No. KLZT10300
Design and Construction of the Special Operations Forces Helicopter Apron, Herat Province, Afghanistan.

The Government intends to award one Firm Fixed Price Contract. This award will be made using the lowest price, technically acceptable source selection process to the responsible prospective contractor whose proposal is responsive to the solicitation requirements.

The magnitude of construction for this project is between $10,000,000.00 and $25,000,000.00.

The point of contact for this acquisition is LTC Derek J. Draper. All emails should be sent to Derek.J.Draper2@usace.army.mil with a courtesy copy to TAS.Contracting@usace.army.mil.

11. The Contractor shall begin performance within 10 calendar days and complete it within 210 calendar days after receiving [ ] award, [X] notice to proceed. This performance period is [X] mandatory, [ ] negotiable. *(See* 52.211-10 *.)*

12 A. THE CONTRACTOR MUST FURNISH ANY REQUIRED PERFORMANCE AND PAYMENT BONDS? *(If "YES," indicate within how many calendar days after award in Item 12B.)* [ ] YES [X] NO	12B. CALENDAR DAYS

13. ADDITIONAL SOLICITATION REQUIREMENTS:

A. Sealed offers in original and _____ copies to perform the work required are due at the place specified in Item 8 by 5:00 PM *(hour)* local time 22 Dec 2011 *(date).* If this is a sealed bid solicitation, offers must be publicly opened at that time. Sealed envelopes containing offers shall be marked to show the offeror's name and address, the solicitation number, and the date and time offers are due.

B. An offer guarantee [ ] is, [X] is not required.

C. All offers are subject to the (1) work requirements, and (2) other provisions and clauses incorporated in the solicitation in full text or by reference.

D. Offers providing less than 120 calendar days for Government acceptance after the date offers are due will not be considered and will be rejected.

SOLICITATION, OFFER, AND AWARD (Continued)

(Construction, Alteration, or Repair)

OFFER ***(Must be fully completed by offeror)***

14. NAME AND ADDRESS OF OFFEROR *(Include ZIP Code)*		15. TELEPHONE NO. *(Include area code)*
		16. REMITTANCE ADDRESS *(Include only if different than Item 14)* **See Item 14**
CODE	FACILITY CODE	

17. The offeror agrees to perform the work required at the prices specified below in strict accordance with the terms of this solicitation, if this offer is accepted by the Government in writing within _____ calendar days after the date offers are due. *(Insert any number equal to or greater than the minimum requirements stated in Item 13D. Failure to insert any number means the offeror accepts the minimum in Item 13D.)*

AMOUNTS	SEE SCHEDULE OF PRICES

18. The offeror agrees to furnish any required performance and payment bonds.

19. ACKNOWLEDGMENT OF AMENDMENTS

(The offeror acknowledges receipt of amendments to the solicitation -- give number and date of each)

AMENDMENT NO.										
DATE										

20A. NAME AND TITLE OF PERSON AUTHORIZED TO SIGN OFFER *(Type or print)*	20B. SIGNATURE	20C. OFFER DATE

AWARD ***(To be completed by Government)***

21. ITEMS ACCEPTED:

22. AMOUNT	23. ACCOUNTING AND APPROPRIATION DATA

24. SUBMIT INVOICES TO ADDRESS SHOWN IN *(4 copies unless otherwise specified)*	**ITEM**	25. OTHER THAN FULL AND OPEN COMPETITION PURSUANT TO ☐ 10 U.S.C. 2304(c) ☐ 41 U.S.C. 253(c)
26. ADMINISTERED BY CODE		27. PAYMENT WILL BE MADE BY: CODE

CONTRACTING OFFICER WILL COMPLETE ITEM 28 OR 29 AS APPLICABLE

☐ 28. NEGOTIATED AGREEMENT *(Contractor is required to sign this document and return _____ copies to issuing office.)* Contractor agrees to furnish and deliver all items or perform all work, requisitions identified on this form and any continuation sheets for the consideration stated in this contract. The rights and obligations of the parties to this contract shall be governed by (a) this contract award, (b) the solicitation, and (c) the clauses, representations, certifications, and specifications or incorporated by reference in or attached to this contract.

☐ 29. AWARD *(Contractor is not required to sign this document.)* Your offer on this solicitation, is hereby accepted as to the items listed. This award consummates the contract, which consists of (a) the Government solicitation and your offer, and (b) this contract award. No further contractual document is necessary.

30A. NAME AND TITLE OF CONTRACTOR OR PERSON AUTHORIZED TO SIGN *(Type or print)*		31A. NAME OF CONTRACTING OFFICER *(Type or print)* TEL: EMAIL:	
30B. SIGNATURE	30C. DATE	31B. UNITED STATES OF AMERICA BY	31C. AWARD DATE

SECTION 00010
PROPOSAL SCHEDULE

The Contractor shall provide a price for all items, including those labeled, “Optional Items”.

CLIN	DESCRIPTION	QTY	UNIT	AMOUNT
	BASE ITEMS			
0001	Mobilization and Demobilization in accordance with solicitation documents.	1	LS	$
0002	Design and Construct Apron (Helicopter Class II Pavement section), Taxiway (Medium Load Pavement section), Asphalt Shoulders, and associated site improvement in accordance with solicitation documents.	1	LS	$
0003	DBA Insurance for Base Items	1	LS	$
The amount listed by the offeror on this CLIN is the estimated DBA insurance premium (estimated payroll of the offeror and its subcontractors, multiplied by the applicable rate(s)). The actual amount paid by the Government under this CLIN will be based on the amount of the Rutherfoord invoice submitted by the offeror after contract award. In the event of recalculation of the premium by CNA based on actual payroll amounts, the Contracting Office will adjust this CLIN by contract modification to reflect actual premium amounts paid.				
	TOTAL BASE BID ITEMS		**LS**	**$**

CLIN	DESCRIPTION	QTY	UNIT	AMOUNT
0004	**OPTIONAL ITEM #1**			
0004AA	Design and Construct additional 6,065 SM of Concrete Pavement for Apron (Helicopter Class II Pavement section) and additional 540 SM Asphalt Shoulder in accordance with solicitation documents.	1	LS	$
0004AB	DBA Insurance for Optional Item #1	1	LS	$
The amount listed by the offeror on this CLIN is the estimated DBA insurance premium (estimated payroll of the offeror and its subcontractors, multiplied by the applicable rate(s)). The actual amount paid by the Government under this CLIN will be based on the amount of the Rutherfoord invoice submitted by the offeror after contract award. In the event of recalculation of the premium by CNA based on actual payroll amounts, the Contracting Office will adjust this CLIN by contract modification to reflect actual premium amounts paid.				
	TOTAL OPTIONAL ITEM #1		**LS**	**$**

CLIN	DESCRIPTION	QTY	UNIT	AMOUNT
0005	**OPTIONAL ITEM #2**			
0005AA	Design and Construct Revetments in accordance with solicitation documents	1	LS	$
0005AB	DBA Insurance for Optional Item #2	1	LS	$
The amount listed by the offeror on this CLIN is the estimated DBA insurance premium (estimated payroll of the offeror and its subcontractors, multiplied by the applicable rate(s)). The actual amount paid by the Government under this CLIN will be based on the amount of the Rutherfoord invoice submitted by the offeror after contract award. In the event of recalculation of the premium by CNA based on actual payroll amounts, the Contracting Office will adjust this CLIN by contract modification to reflect actual premium amounts paid.				
	TOTAL OPTIONAL ITEM #2		LS	

TOTALS		
TOTAL BASE BID ITEMS CLINS 0001 – 0003	**LS**	**$**
TOTAL OPTIONAL ITEMS CLINS 0004 – 0005	**LS**	**$**
TOTAL BASE BID ITEMS AND OPTIONAL ITEMS CLINS 0001 - 0005	**LS**	**$**

SCHEDULE NOTES:

1. Offeror shall submit prices on all items. Scope of work on each item is described in Section 01010. The quantities shown in the bid schedule shall take precedence and be used for developing the proposal.

2. The entire schedule work contained in this solicitation will be awarded as one contract (Design and Construction of the Special Operations Forces Helicopter Apron, Herat Province, Afghanistan. This Proposal Schedule is an accounting tool for allocating funds to applicable budget. All applicable specification from the original contract shall fully apply to this solicitation.

3. Costs associated with this project shall include design and construction costs, site development, and utility installation.

4. DESIGN COSTS DEFINITION: Design costs shall consist of design analysis, drawings, and specifications for all facilities.

5. EVALUATION OF OPTIONS: The award will be made to the lowest, responsive and responsible bidder. For pricing purposes the Government will evaluate both the Base Proposals and Option Proposals. The Government is not obligated to exercise the options.

6. EXERCISE OF OPTIONAL BID ITEMS: Optional bid items (if any) may, at the option of the Government, be exercised at any time within 60 calendar days after receipt of the Notice to Proceed.

6. Abbreviations:

LS = Lump Sum
SM = Square meters
EA = Each

-END OF SECTION-

BASIC PROPOSAL SUBMISSION REQUIREMENTS
(SECTION 00113)

1. General

Basic and Intent: This project is being procured as a full and open competition with offerors submitting competitive proposals using FAR part 15 procedures.

2. Basic Proposal Submission Requirements

a. The intent of the Request for Proposal is to select one (1) Contractor to design and build 45,000SM paved apron for rotary-wing and fixed wing aircraft, with connecting taxiway, concrete maintenance pad, shoulders and pavement markings to suit the various mission requirements at Herat Air Base in Afghanistan. Work will include two soft-side aircraft shelters, airfield edge lighting grounding points and ties down, utilities and other necessary site improvements including but not limited to clearing, grading, and necessary storm drainage measures such as culverts, rip-rap, etc. The facility shall include structures as shown on the drawings, specifications, and contain all necessary utilities for operations as such. These facilities shall be designed and constructed in accordance with current building codes, Unified Facilities Criteria (UFC), safety, and DOD antiterrorism/force protection requirements per UFC and security standards applicable to local standards

The basis of award is Lowest Price Technically Acceptable (LPTA). This award will be made on the basis of the lowest evaluated price of proposals meeting or exceeding the acceptability standards for non-cost factors. The Contracting Officer will award a firm fixed price contract to the responsible offerors whom the SSA determines conforms to the LPTA requirements.

Electronic (softcopy) proposals (submitted as attachments to emails) shall be submitted to the following email address: LTC Derek Draper at Derek.J.Draper2@usace.army.mil with a courtesy copy to tas.contracting@usace.army.mil

All offers must be received by the closing date and time identified in Block #13 of the SF1442 (unless amended) in order to be considered for award.

Hand-carried offers will not be accepted.

3. The Government will not make assumptions concerning an Offeror's intent, capabilities, or experiences. Clear identification of proposal details shall be the Offeror's sole responsibility. The Government may reject incomplete proposals after initial evaluation without further consideration. Therefore, the proposal must meet the following basic requirements at the time of submission:

a. The Proposal shall be typed, submitted in English, and easy to read.

b. Proposal shall be organized, concise, and submitted in the volumes and in the order indicated below. Volumes shall be clearly identified and tabbed. Each factor and sub-factor shall be described in a separate tabbed section.

c. Proposals must be sent in two (2) separate volumes. Each volume shall be contained within a separate PDF file. Each volume shall be identified by the solicitation number, volume number, and name, address, and telephone number of the prime Offeror on the cover. Each volume shall contain a Table of Contents and include at the bottom left side of each page the volume and page number.

d. Offerors shall verify that the information for all forms submitted are current, correct and complete including names of the points of contact, email address, fax number, and telephone number.

e. Proposal Schedule, Volume I, Technical Proposal, shall be completed in full and shall consist of Factor 1, Experience, Factor 2, Personnel, Factor 3, Past Performance

f. Proposal Schedule, Volume II, Price Proposal, shall be completed in full.

g. Offerors shall submit a signed Offer Standard Form 1442 in Volume II for this solicitation, including verification of all amendments received.

h. Offerors will be discouraged from submitting elaborate corporate marketing information, formatting, and special reproduction techniques.

i. If additional information is provided, it shall be with regard to the solicitation requirements only.

j. Failing to submit attachments may result in rejection of the offer without further evaluation. Therefore, Offerors are urged to follow instructions and contact the Contracting Officer via email with questions regarding the instructions.

k. Contractors are cautioned against submitting conditional proposals, or submitting proposals that contain reservations. The Offeror should instead direct all questions and/or concerns to the Contracting Officer, in writing. Questions and/or comments received by the Contract Specialist later than five (5) calendar days prior to the proposal due date shall not be entertained.

l. Proposal Expenses and Pre-Contract Costs: The solicitation does not commit the Government to pay any costs incurred in the preparation and submission of a proposal or for any other costs incurred by any firm submitting a proposal in response to these solicitations.

m. Volume I shall be limited to no more than fifty (50) pages in length. Each page of Volume I shall be numbered sequentially. Use only 8 ½ by 11 inch paper or A4 paper submissions, unless another paper size is specifically authorized elsewhere in this section for a particular submission. Do not use fold-outs (e.g., 11" x 14" or 11" x 17" sheets) unless specifically authorized in this section for a particular submission. A standard, 11-point minimum font size applies. Arial or Times New Roman fonts are required. Tables and illustrations may use a reduced font size of not less than 8-point and may be landscape-oriented. The use of hyperlinks to electronic materials in the proposal is prohibited.

n. Necessary charts and graphics may be larger than 8.5" x 11", but no larger than 11" x 17", and will count as one page. Charts and graphics should only contain the minimal text required to interpret the graphic (such as a concise caption or a map legend). Inclusion of excessive text on a graphic in an attempt to circumvent the page limitation will cause the graphic to be counted as more than one page.

o. All page margins must be at least 1-inch wide, but may include headers and footers. All pages shall be numbered and correlate to proposal index. For submissions with page limitations, the pages will be counted as follows: One side of the paper is one page; information on both the back and front of one sheet of paper will be counted as two pages. Where authorized, fold-out pages (11" x 14" or 11" x 17") will count as one page. Pages furnished for organizational purposes only, such as a "Table of Contents" or divider tabs, are not included in the page limitation.

p. The submission shall be clearly indexed and logically assembled. Each volume shall be clearly identified and shall begin at the top of a page. All pages of each volume shall be appropriately numbered and identified by the complete company name, date and solicitation number in the header and/or footer. A Table of Contents should be created.

q. All information shall be confined to the appropriate file. The offeror shall confine submissions to essential matters, sufficient to define the proposal and provide adequate basis for evaluation. Offerors are responsible for including sufficient details, in a concise manner, to permit a complete and accurate evaluation of each proposal. Proprietary information shall be clearly marked as such.

4. Joint Ventures

a. When proposing as a joint venture, all members of the joint venture shall sign the SF 1442 and the financial surety instrument unless a written agreement by the joint venture is furnished with the proposal designating one firm with the authority to bind the other member(s) of the joint venture. In addition, a copy of the joint venture agreement shall be submitted with the proposal. Failure to comply with the foregoing requirements may eliminate the proposal from further consideration. The JV agreement will not count towards the 50 page limit.

b. If submitting a proposal as a Joint Venture, the experience, past performance, and management approach of each of the Joint Venture Partners can be submitted for the Joint Venture Entity. The experience for each Joint Venture Partner will be considered the experience of the Joint Venture entity. Joint ventures shall submit the following additional documentation regarding their business entities:

a) A copy of their Joint Venture agreement in English.

b) A detailed statement outlining the following in terms of percentages, where appropriate.

c) The relationship of the joint venture parties in terms of business ownership, capital contribution, and profit distribution or loss sharing.

d) The management approach of the joint venture in terms of who will conduct, direct, supervise and control the project and have custody and control of the assets of the joint venture and perform the duties necessary to complete the work.

e) The structure of the joint venture and decision-ranking responsibilities of the joint venture parties in terms of who will control the manner and method of performance of the work.

The bonding responsibilities of the joint venture parties.

a) Identification of the key personnel having authority to legally bind the joint venture to subcontracts and state who will provide or contract for the labor and materials for the joint venture.

b) Identification of the key personnel having authority to legally bind the joint venture to subcontracts and state who will provide or contract for the labor and materials for the joint venture.

c) Identification of party maintaining the joint venture bank accounts for the payment of all expenses and the deposits of all receipts, keep the books and records, and pay applicable taxes for the joint venture.

d) Identification of party furnishing the facilities, such as office supplies and telephone service.

e) Identification of party having overall control of the joint venture.

c. Other sections of the proposal shall identify, where appropriate, whether key personnel are employees of the individual joint venture entities and identify the entity, or hired as employees of the joint venture.

d. If one of the joint venture parties possesses relevant experience and/or past performance, the experience and/or past performance of that firm will be considered as the experience and/or past performance of the joint venture

e. If the Joint Venture is not organized according to U.S. Law, the Government reserves the right to review the actual Joint Venture agreement to determine its basis.

f. A complete and legally binding document with all the information required under this section titled "Joint Ventures" shall be included.

JV Agreements shall clearly indicate the percentages of the JV participants, in particular the percent of the controlling party, a clear delineation of responsibilities and authorities between the JV parties, and provide that each party is jointly and severally liable for the performance of all contract requirements.

5. Certifications and Representations: Each offeror shall complete (including signatures) the solicitation sections indicated below using the file (without modification to the file) provided with the solicitation. An authorized official of the firm shall sign the SF 1442 and all certifications requiring original signature. An Acrobat PDF file shall be created to capture the signatures for submission.

" Standard Form 1442 (SF 1442), Solicitation, Offer and Award
" Contract Administration Data
" Representations, Certifications and Other Statements of Offerors

6. Price Evaluation

The SSEB can evaluate price proposals independent of the technical/quality evaluation. The SSEB will not have access to price information until completion of the technical/quality evaluation.

The SSEB will evaluate and rate those proposals passing the first review, above. Proposals will be evaluated against the solicitation requirements. Factors will be rated either 'Acceptable' or 'Unacceptable'.

The resulting report shall document the findings in detail for each factor, and explain the rationale for elimination from further competition / evaluation. The SSEB Chair will prepare the written report, if a board is convened, or it will be prepared by the individual reviewer. The report will convey the evaluation findings to the SSA. The report

must substantiate in language understandable to non-technical personnel that the evaluation has been conducted fairly and in accordance with the evaluation method and criteria specified in the solicitation. Supporting documentation must include individual evaluation worksheets and the consensus evaluation worksheets (if necessary) for each proposal. This documentation will be included in the contract file.

7. Discussions

Although not anticipated, in accordance with FAR 15.306(d), discussions with each offeror may be held. After completion of discussions with each offeror in the competitive range and in accordance with FAR 15.307(b), all offerors in the competitive range will be allowed a minimum of 3 calendar days to submit Final Proposal Revisions.

9. Site Visit

All prospective bidders are encouraged to attend the voluntary site visit, tentatively scheduled for December 08, 2011 at 1300 HRS (1:00 p.m.). Meeting location will be the proposed location of the SOF Helicopter Apron Facility. This is an active construction site, so all visitors must wear required Personal Protective Equipment including steel-toe boots, hard hat, and reflective vest. POC for this site visit is:

Mr. Nabil Abourialy:
Nabil.Abourialy@usace.army.mil
(540) 542-1405 (VOIP)
079-747-4989 (ROSHAN).

10. Bidder Inquiries/Questions

All questions and inquiries shall be submitted by email to: Derek.J.Draper2@usace.army.mil with a courtesy copy to tas.contracting@usace.army.mil.

Electronic (as email) inquiries to this solicitation must be received by this office not later than five (5) calendar days prior to the due date of proposals. Questions received less than five days prior to the due date of proposals will not be entertained.

Faxed Proposals, Modifications Thereto, Or Cancellations Will Not Be Accepted. However, offers may be withdrawn in writing by letter or e-mail. Any written notice to withdraw an offer sent to this office must be received in the office designated for receipt of offers not later than the exact date and time set for receipt of proposals.

Telephone Inquiries Will Not Be Accepted. Oral explanations or instruction are not binding. Any information given to an Offeror which impacts the solicitation and/or offer will be given in the form of a written amendment to the solicitation.

SECTON IV: EVALUATION FACTORS FOR AWARD

Proposals will be evaluated (in English) in accordance with the evaluation factors. The Government intends to evaluate and award this contract without discussions with offerors (except clarifications as described in FAR 15.306(a)). Therefore, Offerors are reminded to include their best technical and price terms in their initial offer and not to automatically assume that they will have an opportunity to participate in discussions or be asked to submit a revised offer. The Government reserves the right to conduct discussions, if the Contracting Officer later determines them to be necessary.

Volume I - Technical and Performance Capability:

Factor 1	Experience;
Factor 2	Personnel;
Factor 3	Past Performance;
Tab A	Joint Venture Agreement (if applicable)

Volume II - Price:

Tab A	Standard Form 1442;
Tab B	Section 00010, Proposal Bid Schedule;
Tab C	Representations and Certifications.

1. Volume I - Technical and Past Performance Capability

a. Factor 1 - Experience: Submission Requirements

The offeror shall submit a minimum of three (3) but no more than five (5) "Prime Contractor Experience" forms (Appendices Form A-1) attached to the end of this section. The forms shall be used to provide descriptions of projects which show PRIME CONTRACTOR experience with the features/activities delineated in below.

In order to receive an "ACCEPTABLE" rating for this evaluation factor, the projects submitted must satisfy ALL of the following requirements:

1) The Offeror must have been the Prime Contractor on all projects submitted. To meet Prime Contractor Experience, a Prime Contractor must have self performed, on site at least 25% of the direct contract labor, exclusive of other general condition or field overhead personnel, material, equipment, design or subcontractors.

2) AT LEAST ONE (1) project shall demonstrate experience building airfield facilities including aircraft aprons, runways, taxiways or similar large paved concrete facilities in excess of $5,000,000.

3) AT LEAST ONE (1) of the projects used to demonstrate design/build of aircraft aprons, runways, taxiways or similar large paved concrete facility.

4) AT LEAST ONE (1) project must demonstrate successful experience building on a controlled access site and experience with flight line access restrictions and requirements.

5) AT LEAST ONE (1) project used to demonstrate experience must have been completed within the last 3 years from the date of this solicitation.

One project can be used to satisfy multiple features or activities. Each offeror is required to submit at least three (3) but not more than five (5) 'Prime Contractor Experience' forms. Regardless of the number of forms submitted (not to exceed 4), the offeror must demonstrate all of the above features/activities (items 1 through 5).

An IDIQ contract may be submitted only if a single task order could be considered similar to this project. Task orders may not be combined in order to satisfy the features/activities delineated in above.

NOTE: The Prime Contractor is defined as the contractor identified in Block 14 of the Standard Form 1442. If more than one contractor is listed in Block 14, then a signed joint venture must be submitted with the proposal.

Factor 1 - Experience: Evaluation Criteria

"ACCEPTABLE" Rating:

The SSEB will evaluate experience submitted per Section 1.a. The proposal must clearly meet all of the minimum experience requirements identified in Section 1.a to receive an 'Acceptable' rating.

"UNACCEPTABLE" Rating:

Proposals that do not include substantial evidence that the offeror has experience to successfully construct the proposed project will be considered to not meet the minimum requirements of the solicitation and will be rated an 'Unacceptable'. Substantial evidence is defined as written documentation demonstrating the experience required in Section 1.a.

All blocks of the 'Prime Contractor Experience' form (Appendices: Form A1) must be completed, and all data must be accurate, current, and verifiable. Failure to provide a current and accurate point of contact on the 'Prime Contractor Experience' form may render the form and the project as unacceptable.

The Government reserves the right to contact the references listed on the submitted forms in order to verify the information submitted.

b. Factor 2 – Personnel: Submission Requirements

The offeror shall provide resumes for the following key personnel (note, key personnel resumes shall not exceed two pages per key personnel):

1) Overall Project Manager;
2) Construction Superintendent;
3) Quality Control Manager;
4) Senior Electrical Engineer, and;
5) Senior Civil Engineer

Overall Project Manager, Construction Superintendent and Quality Control Manager shall have:

a. The key personnel resume shall demonstrate a minimum of 5 years of relevant experience in their assigned job position on this project as it relates to Design/Build and/or Site Adapt construction projects;

b. Provide documentation identifying each person as a current full-time employee of the Prime Contractor or a letter of intent signifying their employment for this project; and

c. FOR OVERALL PROJECT MANAGER ONLY: In addition to the requirements above, also provide documentation by transcript or otherwise evidencing a 4-year college degree from an accredited university.

The key personnel resume for Senior Electrical and Senior Civil Engineer shall:

a. Demonstrate that the Senior Electrical and Senior Civil Engineers have a minimum 10 years of relevant experience in their assigned job position on this project as it relates to Design/Build and/or Site Adapt construction projects AND must be a professional engineer with an active professional registration in their home of record (HOR). Provide documentation in the form of a certificate or otherwise evidencing a professional license number or registration. If the HOR country does not possess a professional registration practice, the key personnel resume must demonstrate a minimum of 15 years of relevant experience in their assigned job position on this project as it relates to Design/Build and/or Site Adapt construction projects;

b. Provide documentation identifying each person as a current full-time employee of either the Prime Contractor or sub-contractor or a letter of intent signifying their employment for this project; and,

c. Provide documentation by transcript or otherwise evidencing a 4-year college Bachelor of Science or Engineering degree from an accredited university in the respective field of study and assigned job position.

Resumes must include the information on 'Personnel Resume/Experience' form attached at the end of this section. All information must be filled in and all data should be accurate, current, and complete.

NOTE: Identified personnel must be used on the project. Any substitution of identified persons will not be permitted without prior approval of the Contracting Officer. Identification of two individuals proposed for a single position will result in the evaluation of only the least qualified person. A single individual cannot be identified as 'key personnel' for more than one 'key personnel' position.

Factor 2 – Personnel: Evaluation Criteria

"ACCEPTABLE" Rating:

The SSEB will evaluate the resumes of the Key Personnel submitted per Section IV 1.b. The proposal must clearly meet all of the minimum experience requirements identified in Section IV1.b to receive an 'Acceptable' rating.

"UNACCEPTABLE" Rating:

Proposals that fail to include substantial evidence that the offeror can provide key personnel with the qualifications and relevant experience will be considered to not meet the minimum requirements of the solicitation and will be rated an 'Unacceptable'. Substantial evidence is defined as written documentation demonstrating the qualification required in Section 1.b.

c. Factor 3 - Past Performance: Submission Requirements

The offeror shall provide past performance information in one of two formats for each project provided under Factor 1 - Experience.

(1) Copies of Contractor Performance Assessment Reports (CPARs - also commonly referred to as CCASS reports) for projects performed for the U.S. Government. If the project provided has a CPAR, it must be used by the offeror to demonstrate past performance. If CPAR submission is used to validate past performance, it will be the most recent evaluation in the system (i.e. for projects submitted as completed, the final 100% completed CPAR will be provided). If the offeror submits a CPAR, they are not required to submit a separate Past Performance Questionnaire for the specific project.

(2) If CPAR information is not available for a project provided for experience, a completed Past Performance Questionnaire (PPQ), attached at the end of this section (Form PPQ-0) must be provided per the following guidance:

a. The Past Performance Questionnaire included in the solicitation is provided for the offeror to submit to the client for each project the offeror includes in its proposal for Factor 1 (Experience). Ensure correct phone numbers and email addresses are provided for the client point of contact.

b. Completed Past Performance Questionnaires should be submitted with your proposal. If the offeror is unable to obtain a completed PPQ from a client for a project(s) before proposal closing date, the offeror should still submit Form PPQ-0 with their proposal, only with blocks 1-6 filled out, which will provide contract and client information for the respective project(s).

c. Offerors should follow-up with clients/references to ensure timely submittal of questionnaires. If the client requests, questionnaires may be submitted directly to the Government's point of contact, LTC Derek Draper at Derek.J.Draper2@usace.army.mil, prior to the proposal closing date. Offerors shall not incorporate by reference into their proposal PPQs previously submitted for other RFPs. However, this does not preclude the Government from utilizing previously submitted PPQ information in the past performance evaluation.

It is the offeror's responsibility to ensure the Government will be able to contact the POCs using the contact information provided. Offerors are encouraged to send their request to the POC as soon as possible once a project is identified for experience under Factor 1.

The offeror may also include performance recognition documents received within the last 3 years such as awards, award fee determinations, customer letters of commendation, and any other forms of performance recognition.

In addition to the above, the Government may review any other sources of information for evaluating past performance. Other sources may include, but are not limited to, past performance information retrieved through the Past Performance Information Retrieval System (PPIRS), including Contractor Performance Assessment Reporting System (CPARS), using all CAGE/DUNS numbers of team members (partnership, joint venture, teaming arrangement, or parent company/subsidiary/affiliate) identified in the offeror's proposal, inquiries of owner representative(s), Federal Awardee Performance and Integrity Information System (FAPIIS), and any other known sources not provided by the offeror.

While the Government may elect to consider data from other sources, the burden of providing detailed, current, accurate and complete past performance information rests with the Offeror.

e. Factor 3 - Past Performance: Evaluation Criteria

The Source Selection Evaluation Board (SSEB) will evaluate past performance information received as follows:

"ACCEPTABLE" Rating

Based on the offeror's performance record, the Government has a reasonable expectation that the offeror will successfully perform the required effort, or the offeror's performance record is unknown.

"UNACCEPTABLE" Rating

Based on the offeror's performance record, the Government has no reasonable expectation that the offeror will be able to successfully perform the required effort.

Note: In the case of an offeror without a record of relevant past performance or for whom information on past performance is not available or so sparse that no meaningful past performance rating can be reasonably assigned, the offeror may not be evaluated favorably or unfavorably on past performance (see FAR 15.305 (a)(2)(iv)). Therefore, the offeror shall be determined to have unknown past performance. In the context of acceptability/unacceptability, "unknown" shall be considered "acceptable" or an "ACCEPTABLE".

Tab A, Joint Venture Agreement (if applicable), Submission Requirements

If the Offeror is a Joint Venture (JV), include a copy of the JV Agreement. If a JV Agreement has not yet been finalized / approved, indicate its status.

The JV Agreement will not count towards the 50-page limit.

OVERALL TECHNICAL ACCEPTABILITY

If a proposal is found to be technically unacceptable in any one of the three evaluated areas (experience, personnel or past performance), this will render the proposal as technically unacceptable overall, and the offer will be removed from further consideration for award

2. Volume II - Price

a. Tab A, Standard Form 1442: Submission Requirements

The offeror shall submit Standard Form 1442. This form is included in Section 00010 of this SOLICITATION. This submittal must be in a separate electronic file or a separate sealed envelope (if submitting hardcopy proposals).

b. Tab A, Standard Form 1442: Evaluation Criteria

Standard form 1442 is to be completed, to include Block #19 Acknowledgement of Amendments (if applicable), and duly executed with an original signature by an official authorized to bind the company in accordance with FAR 4.102.

c. Tab B, section 00010, Proposal Bid Schedule: Submission Requirements

The Offeror shall complete and submit in its entirety Section 00010, Proposal Bid Schedule. This form is included in Section 00010 of the SOLICITATION.

d. Tab B, section 00010, Proposal Bid Schedule: Evaluation Criteria

The total price (Proposal Bid Schedule) will be evaluated by the SSEB for reasonableness, completeness and unbalanced pricing through the use of cost and or price analysis.

e. Tab C, Representations and Certifications: Submission Requirements

Each offeror shall complete all representations and certifications in Section 00600.

3. Source Selection Decision

The Source Selection Authority (SSA) will make an independent source selection decision using the findings presented by the SSEB. The SSA is not necessarily bound by the evaluation findings
of the SSEB and reserves the right to review all available resources such as the Past Performance Information Management System (PPIMS), Past Performance Information Retrieval System (PPIRS), Federal Awardee Performance Information & Integrity System (FAPIIS), or any other databases or sources available to establish the overall acceptability of an offer using price and non-price factors prior to making award.

4. Responsibility Determination

Prior to actual award of the Contract, the Government will conduct an independent responsibility review of the apparent successful offer in accordance with the provision of FAR Subpart 9.1

ATTACHMENT 1, Form A1, CONTRACTOR EXPERIENCE FORM

Your firm's name

_____

Project name and project location (city, state, country)

_____

Project owner's name (government agency, commercial firm, or other organization)

_____

Project owner's complete address

_____

Your company's role (prime contractor, joint venture, subcontractor) _____

Percentage of work your company performed: _____%

Contract number for this project: _____
Contract value, at time of award $_____
Final invoiced amount (or amount invoiced to date): $ _____

Relevant dates
Date of contract: _____
Date work began: _____
Completion date, initial: _____
Completion date, actual: _____

Points of contact
English-speaking technical point of contact for the project owner
Name and title _____
Email address _____
Phone number _____

English-speaking technical point of contact for the project owner
Name and title _____
Email address _____
Phone number _____

Description of construction contract work

- Describe detailed nature and scope of work.
- Detail how the project demonstrates experience requirements in Section 00113, Paragraph 4.1.1.1.
- Also include an explanation of any performance problems or other conflicts with the customer. (Offerors will be evaluated for the ability to provide timely, complete work; be certain to explain any differences between the initial and actual completion dates above.)
- Use continuation sheet for additional information, if necessary.

_____
_____
_____
_____
_____
_____
_____
_____

Current status of the project (check one)
___ Work continuing, on schedule
___ Work continuing, behind schedule
___ Work completed, no further action pending
___ Work completed, routine administrative action pending
___ Work completed, claims negotiation pending/underway
___ Work completed, litigation pending/underway
___ Terminated for convenience
___ Terminated for default
___ Other (Explain, use additional sheets as necessary)

_____
_____
_____
_____

- End of Contractor Experience Form -

ATTACHMENT 2

PERSONNEL RESUME/EXPERIENCE

Name and Title_____

Name of your firm _____

No. of years: Presently with this firm _____ With other firms _____

No. of years in field of work:_____

Education (School/Degree(s)/Year/Specialization):
_____

Registration/Accreditation: _____ YES _____NO*

License No. _____ Country/State _____ Year _____

*Note: If the HOR country does not possess a professional registration practice, the key personnel resume must demonstrate a minimum of **15 years** of relevant experience in their assigned job position.

Your Assignment on this project
_____

Your specific experience and qualifications relevant to this project. Include a POC with phone number for the two most recent projects described:

Project Name and Location:_____

General Scope of Project:
_____
_____
_____
_____
_____
_____
_____
_____
_____

Your Role in the Project and a Description of the Duties You Performed:
_____
_____
_____
_____
_____
_____
_____
_____
_____

Owner's POC for reference (name and phone number):

_____
_____
_____

Project Name and Location: _____

General Scope of Project:

_____
_____
_____
_____
_____
_____
_____
_____
_____

Your Role in the Project and a Description of the Duties You Performed:

_____
_____
_____
_____
_____
_____
_____
_____
_____
_____
_____

Owner's POC for reference (name and phone number):

_____
_____
_____

NOTE:
1. Key personnel resumes shall not exceed two pages.
2. Attach documentation of full time employment or letter of intent.
3. Attach documentation of college degree.

-- END OF PERSONNEL RESUME/EXPEREINCE --

ATTACHMENT 3

NAVFAC/USACE PAST PERFORMANCE QUESTIONNAIRE (Form PPQ-0)
CONTRACT INFORMATION (Contractor to complete Blocks 1-4)
1. Contractor Information Firm Name: CAGE Code: Address: DUNs Number: Phone Number: Email Address: Point of Contact: Contact Phone Number:
2. Work Performed as: ☐ Prime Contractor ☐ Sub Contractor ☐ Joint Venture ☐ Other (Explain) Percent of project work performed: If subcontractor, who was the prime (Name/Phone #):
3. Contract Information Contract Number: Delivery/Task Order Number (if applicable): Contract Type: ☐ Firm Fixed Price ☐ Cost Reimbursement ☐ Other (Please specify): Contract Title: Contract Location: Award Date (mm/dd/yy): Contract Completion Date (mm/dd/yy): Actual Completion Date (mm/dd/yy): Explain Differences: Original Contract Price (Award Amount): Final Contract Price (*to include all modifications, if applicable*): Explain Differences:
4. Project Description: Complexity of Work ☐ High ☐ Med ☐ Routine How is this project relevant to project of submission? (*Please provide details such as similar equipment, requirements, conditions, etc.*)
CLIENT INFORMATION (Client to complete Blocks 5-8)
5. Client Information Name: Title: Phone Number: Email Address:
6. Describe the client's role in the project:
7. Date Questionnaire was completed (mm/dd/yy)**:**
8. Client's Signature:

NOTE: NAVFAC/USACE REQUESTS THAT THE CLIENT COMPLETES THIS QUESTIONNAIRE AND SUBMITS DIRECTLY BACK TO THE OFFEROR. THE OFFEROR WILL SUBMIT THE COMPLETED QUESTIONNAIRE TO USACE WITH THEIR PROPOSAL, AND MAY DUPLICATE THIS QUESTIONNAIRE FOR FUTURE SUBMISSION ON USACE SOLICITATIONS. CLIENTS ARE HIGHLY ENCOURAGED TO SUBMIT QUESTIONNAIRES DIRECTLY TO THE OFFEROR. HOWEVER, QUESTIONNAIRES MAY BE SUBMITTED DIRECTLY TO USACE. PLEASE CONTACT THE OFFEROR FOR USACE POC INFORMATION. THE GOVERNMENT RESERVES THE RIGHT TO VERIFY ANY AND ALL INFORMATION ON THIS FORM.

ADJECTIVE RATINGS AND DEFINITIONS TO BE USED TO BEST REFLECT YOUR EVALUATION OF THE CONTRACTOR'S PERFORMANCE

RATING	DEFINITION	NOTE
(E) Exceptional	Performance meets contractual requirements and exceeds many to the Government/Owner's benefit. The contractual performance of the element or sub-element being assessed was accomplished with few minor problems for which corrective actions taken by the contractor was highly effective.	An Exceptional rating is appropriate when the Contractor successfully performed multiple significant events that were of benefit to the Government/Owner. A singular benefit, however, could be of such magnitude that it alone constitutes an Exceptional rating. Also, there should have been NO significant weaknesses identified.
(VG) Very Good	Performance meets contractual requirements and exceeds some to the Government's/Owner's benefit. The contractual performance of the element or sub-element being assessed was accomplished with some minor problems for which corrective actions taken by the contractor were effective.	A Very Good rating is appropriate when the Contractor successfully performed a significant event that was a benefit to the Government/Owner. There should have been no significant weaknesses identified.
(S) Satisfactory	Performance meets minimum contractual requirements. The contractual performance of the element or sub-element contains some minor problems for which corrective actions taken by the contractor appear or were satisfactory.	A Satisfactory rating is appropriate when there were only minor problems, or major problems that the contractor recovered from without impact to the contract. There should have been NO significant weaknesses identified. Per DOD policy, a fundamental principle of assigning ratings is that contractors will not be assessed a rating lower than Satisfactory solely for not performing beyond the requirements of the contract.
(M) Marginal	Performance does not meet some contractual requirements. The contractual performance of the element or sub-element being assessed reflects a serious problem for which the contractor has not yet identified corrective actions. The contractor's proposed actions appear only marginally effective or were not fully implemented.	A Marginal is appropriate when a significant event occurred that the contractor had trouble overcoming which impacted the Government/Owner.
(U) Unsatisfactory	Performance does not meet most contractual requirements and recovery is not likely in a timely manner. The contractual performance of the element or sub-element contains serious problem(s) for which the contractor's corrective actions appear or were ineffective.	An Unsatisfactory rating is appropriate when multiple significant events occurred that the contractor had trouble overcoming and which impacted the Government/Owner. A singular problem, however, could be of such serious magnitude that it alone constitutes an unsatisfactory rating.
(N) Not Applicable	No information or did not apply to your contract	Rating will be neither positive nor negative.

PERFORMANCE EVALUATION
TO BE COMPLETED BY CLIENT

PLEASE CIRCLE THE ADJECTIVE RATING WHICH BEST REFLECTS YOUR EVALUATION OF THE CONTRACTOR'S PERFORMANCE.

1. QUALITY:						
a) Quality of technical data/report preparation efforts	E	VG	S	M	U	N
b) Ability to meet quality standards specified for technical performance	E	VG	S	M	U	N
c) Timeliness/effectiveness of contract problem resolution without extensive customer guidance	E	VG	S	M	U	N
d) Adequacy/effectiveness of quality control program and adherence to contract quality assurance requirements (without adverse effect on performance)	E	VG	S	M	U	N
2. SCHEDULE/TIMELINESS OF PERFORMANCE:						
a) Compliance with contract delivery/completion schedules including any significant intermediate milestones. *(If liquidated damages were assessed or the schedule was not met, please address below)*	E	VG	S	M	U	N
b) Rate the contractor's use of available resources to accomplish tasks identified in the contract	E	VG	S	M	U	N
3. CUSTOMER SATISFACTION:						
a) To what extent were the end users satisfied with the project?	E	VG	S	M	U	N
b) Contractor was reasonable and cooperative in dealing with your staff (including the ability to successfully resolve disagreements/disputes; responsiveness to administrative reports, businesslike and communication)	E	VG	S	M	U	N
c) To what extent was the contractor cooperative, businesslike, and concerned with the interests of the customer?	E	VG	S	M	U	N
d) Overall customer satisfaction	E	VG	S	M	U	N
4. MANAGEMENT/ PERSONNEL/LABOR						
a) Effectiveness of on-site management, including management of subcontractors, suppliers, materials, and/or labor force?	E	VG	S	M	U	N
b) Ability to hire, apply, and retain a qualified workforce to this effort	E	VG	S	M	U	N
c) Government Property Control	E	VG	S	M	U	N
d) Knowledge/expertise demonstrated by contractor personnel	E	VG	S	M	U	N
e) Utilization of Small Business concerns	E	VG	S	M	U	N
f) Ability to simultaneously manage multiple projects with multiple disciplines	E	VG	S	M	U	N
g) Ability to assimilate and incorporate changes in requirements and/or priority, including planning, execution and response to Government changes	E	VG	S	M	U	N
h) Effectiveness of overall management (including ability to effectively lead, manage and control the program)	E	VG	S	M	U	N
5. COST/FINANCIAL MANAGEMENT						
a) Ability to meet the terms and conditions within the contractually agreed price(s)?	E	VG	S	M	U	N
b) Contractor proposed innovative alternative methods/processes that reduced cost, improved maintainability or other factors that benefited the client	E	VG	S	M	U	N

c) If this is/was a Government cost type contract, please rate the Contractor's timeliness and accuracy in submitting monthly invoices with appropriate back-up documentation, monthly status reports/budget variance reports, compliance with established budgets and avoidance of significant and/or unexplained variances (under runs or overruns)	E	VG	S	M	U	N
d) Is the Contractor's accounting system adequate for management and tracking of costs? *If no, please explain in Remarks section.*	Yes			No		
e) If this is/was a Government contract, has/was this contract been partially or completely terminated for default or convenience or are there any pending terminations? *Indicate if show cause or cure notices were issued, or any default action in comment section below.*	Yes			No		
f) Have there been any indications that the contractor has had any financial problems? *If yes, please explain below.*	Yes			No		
6. SAFETY/SECURITY						
a) To what extent was the contractor able to maintain an environment of safety, adhere to its approved safety plan, and respond to safety issues? (Includes: following the users rules, regulations, and requirements regarding housekeeping, safety, correction of noted deficiencies, etc.)	E	VG	S	M	U	N
b) Contractor complied with all security requirements for the project and personnel security requirements.	E	VG	S	M	U	N
7. GENERAL						
a) Ability to successfully respond to emergency and/or surge situations (including notifying COR, PM or Contracting Officer in a timely manner regarding urgent contractual issues).	E	VG	S	M	U	N
b) Compliance with contractual terms/provisions *(explain if specific issues)*	E	VG	S	M	U	N
c) Would you hire or work with this firm again? *(If no, please explain below)*	Yes			No		
d) In summary, provide an overall rating for the work performed by this contractor.	E	VG	S	M	U	N

-- END OF PAST PERFORMANCE QUESTIONNAIRE --

52.215-1 Instructions to Offerors--Competitive Acquisition JAN 2004

CLAUSES INCORPORATED BY FULL TEXT

52.214-5000 APPARENT CLERICAL MISTAKES (MAR 1995)--EFARS

(a) For the purpose of initial evaluations of bids, the following will be utilized in the resolving arithmetic discrepancies found on the face of bidding schedule as submitted by the bidder:

(1) Obviously misplaced decimal points will be corrected;

(2) Discrepancy between unit price and extended price, the unit price will govern;

(3) Apparent errors in extension of unit prices will be corrected;

(4) Apparent errors in addition of lump-sum and extended prices will be corrected.

(b) For the purpose of bid evaluation, the government will proceed on the assumption that the bidder intends his bid to be evaluated on basis of the unit prices, the totals arrived at by resolution of arithmetic discrepancies as provided above and the bid will be so reflected on the abstract of bids.

(c) These correction procedures shall not be used to resolve any ambiguity concerning which bid is low.

(End of statement)

52.216-1 TYPE OF CONTRACT (APR 1984)

The Government contemplates award of a FIRM FIXED PRICE contract resulting from this solicitation.

(End of provision)

52.217-5 EVALUATION OF OPTIONS (JUL 1990)

Except when it is determined in accordance with FAR 17.206(b) not to be in the Government's best interests, the Government will evaluate offers for award purposes by adding the total price for all options to the total price for the basic requirement. Evaluation of options will not obligate the Government to exercise the option(s).

(End of provision)

52.233-2 SERVICE OF PROTEST (SEP 2006)

(a) Protests, as defined in section 33.101 of the Federal Acquisition Regulation, that are filed directly with an agency, and copies of any protests that are filed with the Government Accountability Office (GAO), shall be served on the Contracting Officer (addressed as follows) by obtaining written and dated acknowledgment of receipt from U.S. ARMY CORPS OF ENGINEERS, KANDAHAR, AFGHANISTAN, APO, AE 09355.

(b) The copy of any protest shall be received in the office designated above within one day of filing a protest with the GAO.

(End of provision)

52.236-27 SITE VISIT (CONSTRUCTION) (FEB 1995) – ALTERNATE I (FEB 1995)

(a) The clauses at 52.236-2, Differing Site Conditions, and 52.236-3, Site Investigations and Conditions Affecting the Work, will be included in any contract awarded as a result of this solicitation. Accordingly, offerors or quoters are urged and expected to inspect the site where the work will be performed.

(b) An organized site visit has been scheduled for--

All prospective bidders are encouraged to attend the voluntary site visit, tentatively scheduled for December 08, 2011 at 1300 HRS (1:00 p.m.). Meeting location will be the proposed location of the SOF Helicopter Apron Facility.

This is an active construction site, so all visitors must wear required PPE including steel-toe boots, hard hat, and reflective vest. POC for this site visit is:

Mr. Nabil Abourialy:
Nabil.Abourialy@usace.army.mil
(540) 542-1405 (VOIP)
079-747-4989 (ROSHAN).

52.236-28 PREPARATION OF PROPOSALS--CONSTRUCTION (OCT 1997)

(a) Proposals must be (1) submitted on the forms furnished by the Government or on copies of those forms, and (2) manually signed. The person signing a proposal must initial each erasure or change appearing on any proposal form.

(b) The proposal form may require offerors to submit proposed prices for one or more items on various bases, including--

(1) Lump sum price;

(2) Alternate prices;

(3) Units of construction; or

(4) Any combination of paragraphs (b)(1) through (b)(3) of this provision.

(c) If the solicitation requires submission of a proposal on all items, failure to do so may result in the proposal being rejected without further consideration. If a proposal on all items is not required, offerors should insert the words “no proposal” in the space provided for any item on which no price is submitted.

(d) Alternate proposals will not be considered unless this solicitation authorizes their submission.

(End of provision)

52.252-1 SOLICITATION PROVISIONS INCORPORATED BY REFERENCE (FEB 1998)

This solicitation incorporates one or more solicitation provisions by reference, with the same force and effect as if they were given in full text. Upon request, the Contracting Officer will make their full text available. The offeror is cautioned that the listed provisions may include blocks that must be completed by the offeror and submitted with its quotation or offer. In lieu of submitting the full text of those provisions, the offeror may identify the provision by

paragraph identifier and provide the appropriate information with its quotation or offer. Also, the full text of a solicitation provision may be accessed electronically at this/these address(es):

http://farsite.hill.af.mil/

http://acquisition.gov/comp/far/index.html

(End of provision

52.252-5 AUTHORIZED DEVIATIONS IN PROVISIONS (APR 1984)

(a) The use in this solicitation of any Federal Acquisition Regulation (48 CFR Chapter 1) provision with an authorized deviation is indicated by the addition of"(DEVIATION)" after the date of the provision.

(b) The use in this solicitation of any DEFENSE FAR SUPPLEMENT (48 CFR Chapter 2) provision with an authorized deviation is indicated by the addition of "(DEVIATION)" after the name of the regulation.

(End of provision)

DEFENSE BASE ACT INSURANCE RATES – LIMITATION – FIXED-PRICE (APRIL 2011)

(a) The U.S. Army Corps of Engineers (USACE) has entered into a contract with **CNA Insurance** to provide all Defense Base Act (DBA) insurance to USACE, C-3 and the 408th CSB contractors and subcontractors at a contracted fixed rate. The fixed rates for this insurance are as follows:

Service	$3.50	per $100 of employee remuneration
Construction	$4.25	per $100 of employee remuneration
Security	$10.00	per $100 of employee remuneration
Aviation	$17.00	per $100 of employee remuneration

(b) Bidders/Offerors should **compute the total compensation or total payroll**, (salary, plus overseas recruitment incentive and post differential, but ***excludes*** per diem, housing allowance, travel expenses, temporary quarters allowance, education allowance and other miscellaneous post allowances to include fee or profit) to be paid to employees who will be covered by DBA insurance. Compute the cost of DBA Insurance by utilizing the spaces provided below for the base period and whatever extension there may be thereafter, if applicable.

(1) Compensation of Covered Employees: _____
(Total Payroll Not Total Contract Value) Ex: If total Payroll is $100,000.00

(2) Applicable DBA Rate: _____
(Use appropriate Rate) Ex: If a Service, the rate is $3.50/$100 or 3.5%

(3) Total DBA Cost: _____
(Amount of DBA Premium) Ex: $100 K multiplied by 3% is $3,000.00

(c) Bidders/Offerors shall include a statement as to whether or not local nationals or third country nationals will be employed on the resultant contract.

(d) CNA Insurance is utilizing Rutherfoord International as their managing Broker. The primary POC is the USACE DBA Program Administrator is Nikki Houngmany, (703) 813-6571 usace@rutherfoord.com. The alternate POC is Sara Payne, Senior Vice President, (703) 813-6503 sara.payne@rutherfoord.com.

(e) Labor Category/Job Classification Definitions:

SERVICE: White-collar" workers providing IT, engineering/consulting services, and restaurant services. Security consultants are included in this category if they are only providing risk assessment services and no form of armed protection.

CONSTRUCTION: "Blue-collar" workers providing services such as carpentry, electrical, plumbing, mechanical, concrete/asphalt, de-mining, roofing, landscaping, janitorial, trash removal, Port-a-John/septic cleaning, pest exterminating, auto repair/dismantling, drivers/couriers, and heavy equipment operation and maintenance. Construction site supervisors/managers and life support service providers are included in this category as well as all Unskilled and Manual Labor Day Laborers. ** Most work will fall into this category**

SECURITY: Personal Security Detail (PSD) and Static or Convoy Guarding of property or personnel.

AVIATION: Pilot and Crew of any aircraft excluding ground personnel who provide maintenance or services and stay on the ground.

Section 00600 - Representations & Certifications

CLAUSES INCORPORATED BY FULL TEXT

52.203-2 CERTIFICATE OF INDEPENDENT PRICE DETERMINATION (APR 1985)

(a) The offeror certifies that --

(1) The prices in this offer have been arrived at independently, without, for the purpose of restricting competition, any consultation, communication, or agreement with any other offeror or competitor relating to –

(i) Those prices,

(ii) The intention to submit an offer, or

(iii) The methods of factors used to calculate the prices offered:

(2) The prices in this offer have not been and will not be knowingly disclosed by the offeror, directly or indirectly, to any other offeror or competitor before bid opening (in the case of a sealed bid solicitation) or contract award (in the case of a negotiated solicitation) unless otherwise required by law; and

(3) No attempt has been made or will be made by the offeror to induce any other concern to submit or not to submit an offer for the purpose of restricting competition.

(b) Each signature on the offer is considered to be a certification by the signatory that the signatory --

(1) Is the person in the offeror's organization responsible for determining the prices offered in this bid or proposal, and that the signatory has not participated and will not participate in any action contrary to subparagraphs (a)(1) through (a)(3) of this provision; or

(2) (i) Has been authorized, in writing, to act as agent for the following principals in certifying that those principals have not participated, and will not participate in any action contrary to subparagraphs (a)(1) through (a)(3) of this provison _____ (insert full name of person(s) in the offeror's organization responsible for determining the prices offered in this bid or proposal, and the title of his or her position in the offeror's organization);

(ii) As an authorized agent, does certify that the principals named in subdivision (b)(2)(i) above have not participated, and will not participate, in any action contrary to subparagraphs (a)(1) through (a)(3) above; and

(iii) As an agent, has not personally participated, and will not participate, in any action contrary to subparagraphs (a)(1) through (a)(3) of this provision.

(c) If the offeror deletes or modifies subparagraph (a)(2) of this provision, the offeror must furnish with its offer a signed statement setting forth in detail the circumstances of the disclosure.

(End of clause)

52.203-11 CERTIFICATION AND DISCLOSURE REGARDING PAYMENTS TO INFLUENCE CERTAIN FEDERAL TRANSACTIONS (SEP 2007)

(a) Definitions. As used in this provision--``Lobbying contact'' has the meaning provided at 2 U.S.C. 1602(8). The terms ``agency,'' ``influencing or attempting to influence,'' ``officer or employee of an agency,'' ``person,''

``reasonable compensation," and ``regularly employed" are defined in the FAR clause of this solicitation entitled ``Limitation on Payments to Influence Certain Federal Transactions" (52.203-12).

(b) Prohibition. The prohibition and exceptions contained in the FAR clause of this solicitation entitled ``Limitation on Payments to Influence Certain Federal Transactions" (52.203-12) are hereby incorporated by reference in this provision.

(c) Certification. The offeror, by signing its offer, hereby certifies to the best of its knowledge and belief that no Federal appropriated funds have been paid or will be paid to any person for influencing or attempting to influence an officer or employee of any agency, a Member of Congress, an officer or employee of Congress, or an employee of a Member of Congress on its behalf in connection with the awarding of this contract.

(d) Disclosure. If any registrants under the Lobbying Disclosure Act of 1995 have made a lobbying contact on behalf of the offeror with respect to this contract, the offeror shall complete and submit, with its offer, OMB Standard Form LLL, Disclosure of Lobbying Activities, to provide the name of the registrants. The offeror need not report regularly employed officers or employees of the offeror to whom payments of reasonable compensation were made.

(e) Penalty. Submission of this certification and disclosure is a prerequisite for making or entering into this contract imposed by 31 U.S.C. 1352. Any person who makes an expenditure prohibited under this provision or who fails to file or amend the disclosure required to be filed or amended by this provision, shall be subject to a civil penalty of not less than $10,000, and not more than $100,000, for each such failure.

(End of provision)

52.204-7 CENTRAL CONTRACTOR REGISTRATION (APR 2008)

(a) Definitions. As used in this clause--

Central Contractor Registration (CCR) database means the primary Government repository for Contractor information required for the conduct of business with the Government.

Data Universal Numbering System (DUNS) number means the 9-digit number assigned by Dun and Bradstreet, Inc. (D&B) to identify unique business entities.

Data Universal Numbering System +4 (DUNS+4) number means the DUNS number assigned by D&B plus a 4-character suffix that may be assigned by a business concern. (D&B has no affiliation with this 4-character suffix.) This 4-character suffix may be assigned at the discretion of the business concern to establish additional CCR records for identifying alternative Electronic Funds Transfer (EFT) accounts (see the FAR at Subpart 32.11) for the same parent concern.

Registered in the CCR database means that--

(1) The Contractor has entered all mandatory information, including the DUNS number or the DUNS+4 number, into the CCR database; and

(2) The Government has validated all mandatory data fields, to include validation of the Taxpayer Identification Number (TIN) with the Internal Revenue Service (IRS), and has marked the record ``Active". The Contractor will be required to provide consent for TIN validation to the Government as a part of the CCR registration process.

(b)(1) By submission of an offer, the offeror acknowledges the requirement that a prospective awardee shall be registered in the CCR database prior to award, during performance, and through final payment of any contract, basic agreement, basic ordering agreement, or blanket purchasing agreement resulting from this solicitation.

(2) The offeror shall enter, in the block with its name and address on the cover page of its offer, the annotation “DUNS” or “DUNS +4” followed by the DUNS or DUNS +4 number that identifies the offeror's name and address exactly as stated in the offer. The DUNS number will be used by the Contracting Officer to verify that the offeror is registered in the CCR database.

(c) If the offeror does not have a DUNS number, it should contact Dun and Bradstreet directly to obtain one.

(1) An offeror may obtain a DUNS number--

(i) Via the Internet at http://fedgov.dnb.com/webform or if the offeror does not have internet access, it may call Dun and Bradstreet at 1-866-705-5711 if located within the United States; or

(ii) If located outside the United States, by contacting the local Dun and Bradstreet office. The offeror should indicate that it is an offeror for a U.S. Government contract when contacting the local Dun and Bradstreet office.

(2) The offeror should be prepared to provide the following information:

(i) Company legal business.

(ii) Tradestyle, doing business, or other name by which your entity is commonly recognized.

(iii) Company Physical Street Address, City, State, and Zip Code.

(iv) Company Mailing Address, City, State and Zip Code (if separate from physical).

(v) Company Telephone Number.

(vi) Date the company was started.

(vii) Number of employees at your location.

(viii) Chief executive officer/key manager.

(ix) Line of business (industry).

(x) Company Headquarters name and address (reporting relationship within your entity).

(d) If the Offeror does not become registered in the CCR database in the time prescribed by the Contracting Officer, the Contracting Officer will proceed to award to the next otherwise successful registered Offeror.

(e) Processing time, which normally takes 48 hours, should be taken into consideration when registering. Offerors who are not registered should consider applying for registration immediately upon receipt of this solicitation.

(f) The Contractor is responsible for the accuracy and completeness of the data within the CCR database, and for any liability resulting from the Government's reliance on inaccurate or incomplete data. To remain registered in the CCR database after the initial registration, the Contractor is required to review and update on an annual basis from the date of initial registration or subsequent updates its information in the CCR database to ensure it is current, accurate and complete. Updating information in the CCR does not alter the terms and conditions of this contract and is not a substitute for a properly executed contractual document.

(g)(1)(i) If a Contractor has legally changed its business name, “doing business as” name, or division name (whichever is shown on the contract), or has transferred the assets used in performing the contract, but has not completed the necessary requirements regarding novation and change-of-name agreements in Subpart 42.12, the

Contractor shall provide the responsible Contracting Officer a minimum of one business day's written notification of its intention to (A) change the name in the CCR database; (B) comply with the requirements of Subpart 42.12 of the FAR; and (C) agree in writing to the timeline and procedures specified by the responsible Contracting Officer. The Contractor must provide with the notification sufficient documentation to support the legally changed name.

(ii) If the Contractor fails to comply with the requirements of paragraph (g)(1)(i) of this clause, or fails to perform the agreement at paragraph (g)(1)(i)(C) of this clause, and, in the absence of a properly executed novation or change-of-name agreement, the CCR information that shows the Contractor to be other than the Contractor indicated in the contract will be considered to be incorrect information within the meaning of the “Suspension of Payment” paragraph of the electronic funds transfer (EFT) clause of this contract.

(2) The Contractor shall not change the name or address for EFT payments or manual payments, as appropriate, in the CCR record to reflect an assignee for the purpose of assignment of claims (see FAR Subpart 32.8, Assignment of Claims). Assignees shall be separately registered in the CCR database. Information provided to the Contractor's CCR record that indicates payments, including those made by EFT, to an ultimate recipient other than that Contractor will be considered to be incorrect information within the meaning of the “Suspension of payment” paragraph of the EFT clause of this contract.

(h) Offerors and Contractors may obtain information on registration and annual confirmation requirements via the internet at http://www.ccr.gov or by calling 1-888-227-2423, or 269-961-5757.

(End of clause)

52.204-8 ANNUAL REPRESENTATIONS AND CERTIFICATIONS (MAY 2011)

(a)(1) The North American Industry Classification System (NAICS) code for this acquisition is ---------- 237990.

(2) The small business size standard is ---------- $33.5

(3) The small business size standard for a concern which submits an offer in its own name, other than on a construction or service contract, but which proposes to furnish a product which it did not itself manufacture, is 500 employees.

(b)(1) If the clause at 52.204-7, Central Contractor Registration, is included in this solicitation, paragraph (d) of this provision applies.

(2) If the clause at 52.204-7 is not included in this solicitation, and the offeror is currently registered in CCR, and has completed the ORCA electronically, the offeror may choose to use paragraph (d) of this provision instead of completing the corresponding individual representations and certifications in the solicitation. The offeror shall indicate which option applies by checking one of the following boxes:

(__) Paragraph (d) applies.

(__) Paragraph (d) does not apply and the offeror has completed the individual representations and certifications in the solicitation.

(c)(1) The following representations or certifications in ORCA are applicable to this solicitation as indicated:

(i) 52.203-2, Certificate of Independent Price Determination. This provision applies to solicitations when a firm-fixed-price contract or fixed-price contract with economic price adjustment is contemplated, unless--

(A) The acquisition is to be made under the simplified acquisition procedures in Part 13;

(B) The solicitation is a request for technical proposals under two-step sealed bidding procedures; or

(C) The solicitation is for utility services for which rates are set by law or regulation.

(ii) 52.203-11, Certification and Disclosure Regarding Payments to Influence Certain Federal Transactions. This provision applies to solicitations expected to exceed $150,000.

(iii) 52.204-3, Taxpayer Identification. This provision applies to solicitations that do not include the clause at 52.204-7, Central Contractor Registration.

(iv) 52.204-5, Women-Owned Business (Other Than Small Business).This provision applies to solicitations that--

(A) Are not set aside for small business concerns;

(B) Exceed the simplified acquisition threshold; and

(C) Are for contracts that will be performed in the United States or its outlying areas.

(v) 52.209-2, Prohibition on Contracting with Inverted Domestic Corporations--Representation. This provision applies to solicitations using funds appropriated in fiscal years 2008, 2009, or 2010.

(vi) 52.209-5, Certification Regarding Responsibility Matters. This provision applies to solicitations where the contract value is expected to exceed the simplified acquisition threshold.

(vii) 52.223-5, Pollution Prevention and Right-to-Know Information (May 2011) (E.O. 13423) (Applies to services performed on Federal facilities).

(viii) 52.215-6, Place of Performance. This provision applies to solicitations unless the place of performance is specified by the Government.

(ix) 52.219-1, Small Business Program Representations (Basic & Alternate I). This provision applies to solicitations when the contract will be performed in the United States or its outlying areas.

(A) The basic provision applies when the solicitations are issued by other than DoD, NASA, and the Coast Guard.

(B) The provision with its Alternate I applies to solicitations issued by DoD, NASA, or the Coast Guard.

(x) 52.219-2, Equal Low Bids. This provision applies to solicitations when contracting by sealed bidding and the contract will be performed in the United States or its outlying areas.

(xi) 52.222-22, Previous Contracts and Compliance Reports. This provision applies to solicitations that include the clause at 52.222-26, Equal Opportunity.

(xii) 52.222-25, Affirmative Action Compliance. This provision applies to solicitations, other than those for construction, when the solicitation includes the clause at 52.222-26, Equal Opportunity.

(xiii) 52.222-38, Compliance with Veterans' Employment Reporting Requirements. This provision applies to solicitations when it is anticipated the contract award will exceed the simplified acquisition threshold and the contract is not for acquisition of commercial items.

(xiv) 52.223-1, Biobased Product Certification. This provision applies to solicitations that require the delivery or specify the use of USDA-designated items; or include the clause at 52.223-2, Affirmative Procurement of Biobased Products Under Service and Construction Contracts.

(xv) 52.223-4, Recovered Material Certification. This provision applies to solicitations that are for, or specify the use of, EPA-designated items.

(xvi) 52.225-2, Buy American Act Certificate. This provision applies to solicitations containing the clause at 52.225-1.

(xvii) 52.225-4, Buy American Act--Free Trade Agreements—Israeli Trade Act Certificate. (Basic, Alternate I, and Alternate II) This provision applies to solicitations containing the clause at 52.225-3.

(A) If the acquisition value is less than $25,000, the basic provision applies.

(B) If the acquisition value is $25,000 or more but is less than $50,000, the provision with its Alternate I applies.

(C) If the acquisition value is $50,000 or more but is less than $67,826, the provision with its Alternate II applies.

(xviii) 52.225-6, Trade Agreements Certificate. This provision applies to solicitations containing the clause at 52.225-5.

(xix) 52.225-20, Prohibition on Conducting Restricted Business Operations in Sudan--Certification. This provision applies to all solicitations.

(xx) 52.225-25, Prohibition on Engaging in Sanctioned Activities Relating to Iran--Certification. This provision applies to all solicitations.

(xxi) 52.226-2, Historically Black College or University and Minority Institution Representation. This provision applies to--

(A) Solicitations for research, studies, supplies, or services of the type normally acquired from higher educational institutions; and

(B) For DoD, NASA, and Coast Guard acquisitions, solicitations that contain the clause at 52.219-23, Notice of Price Evaluation Adjustment for Small Disadvantaged Business Concerns.

(2) The following certifications are applicable as indicated by the Contracting Officer:

(Contracting Officer check as appropriate.)

------(i) 52.219-22, Small Disadvantaged Business Status.

------(A) Basic.

------(B) Alternate I.

------(ii) 52.222-18, Certification Regarding Knowledge of Child Labor for Listed End Products.

------(iii) 52.222-48, Exemption from Application of the Service Contract Act to Contracts for Maintenance, Calibration, or Repair of Certain Equipment Certification.

------(iv) 52.222-52 Exemption from Application of the Service Contract Act to Contracts for Certain Services--Certification.

------(v) 52.223-9, with its Alternate I, Estimate of Percentage of Recovered Material Content for EPA-Designated Products (Alternate I only).

------(vi) 52.223-13, Certification of Toxic Chemical Release Reporting.

------(vii) 52.227-6, Royalty Information.

------ (A) Basic.

------ (B) Alternate I.

------(viii) 52.227-15, Representation of Limited Rights Data and Restricted Computer Software.

(d) The offeror has completed the annual representations and certifications electronically via the Online Representations and Certifications Application (ORCA) website at http://orca.bpn.gov. After reviewing the ORCA database information, the offeror verifies by submission of the offer that the representations and certifications currently posted electronically that apply to this solicitation as indicated in paragraph (c) of this provision have been entered or updated within the last 12 months, are current, accurate, complete, and applicable to this solicitation (including the business size standard applicable to the NAICS code referenced for this solicitation), as of the date of this offer and are incorporated in this offer by reference (see FAR 4.1201); except for the changes identified below (offeror to insert changes, identifyingchange by clause number, title, date). These amended representation(s) and/or certification(s) are also incorporated in this offer and are current, accurate, and complete as of the date of this offer.

FAR Clause	Title	Date	Change

Any changes provided by the offeror are applicable to this solicitation only, and do not result in an update to the representations and certifications posted on ORCA.

(End of Provision)

52.209-2 PROHIBITION ON CONTRACTING WITH INVERTED DOMESTIC CORPORATIONS--REPRESENTATION (MAY 2011)

(a) Definitions. Inverted domestic corporation and subsidiary have the meaning given in the clause of this contract entitled Prohibition on Contracting with Inverted Domestic Corporations (52.209-10).

(b) Relation to Internal Revenue Code. An inverted domestic corporation as herein defined does not meet the definition of an inverted domestic corporation as defined by the Internal Revenue Code at 26 U.S.C. 7874.

(c) Representation. By submission of its offer, the offeror represents that--

(1) It is not an inverted domestic corporation; and

(2) It is not a subsidiary of an inverted domestic corporation.

(End of provision)

52.209-5 CERTIFICATION REGARDING RESPONSIBILITY MATTERS (APR 2010)

(a)(1) The Offeror certifies, to the best of its knowledge and belief, that-

(i) The Offeror and/or any of its Principals-

(A) Are ( ) are not ( ) presently debarred, suspended, proposed for debarment, or declared ineligible for the award of contracts by any Federal agency;

(B) Have ( ) have not ( ), within a three-year period preceding this offer, been convicted of or had a civil judgment rendered against them for: commission of fraud or a criminal offense in connection with obtaining, attempting to obtain, or performing a public (Federal, State, or local) contract or subcontract; violation of Federal or State antitrust statutes relating to the submission of offers; or commission of embezzlement, theft, forgery, bribery, falsification or destruction of records, making false statements, tax evasion, violating Federal criminal tax laws, or receiving stolen property (if offeror checks “have”, the offeror shall also see 52.209-7, if included in this solicitation); and

(C) Are ( ) are not ( ) presently indicted for, or otherwise criminally or civilly charged by a governmental entity with, commission of any of the offenses enumerated in paragraph (a)(1)(i)(B) of this provision.; and

(D) Have [ballot], have not [ballot], within a three-year period preceding this offer, been notified of any delinquent Federal taxes in an amount that exceeds $3,000 for which the liability remains unsatisfied.

(1) Federal taxes are considered delinquent if both of the following criteria apply:

(i) The tax liability is finally determined. The liability is finally determined if it has been assessed. A liability is not finally determined if there is a pending administrative or judicial challenge. In the case of a judicial challenge to the liability, the liability is not finally determined until all judicial appeal rights have been exhausted.

(ii) The taxpayer is delinquent in making payment. A taxpayer is delinquent if the taxpayer has failed to pay the tax liability when full payment was due and required. A taxpayer is not delinquent in cases where enforced collection action is precluded.

(2) Examples. (i) The taxpayer has received a statutory notice of deficiency, under I.R.C. Sec. 6212, which entitles the taxpayer to seek Tax Court review of a proposed tax deficiency. This is not a delinquent tax because it is not a final tax liability. Should the taxpayer seek Tax Court review, this will not be a final tax liability until the taxpayer has exercised all judicial appeal rights.

(ii) The IRS has filed a notice of Federal tax lien with respect to an assessed tax liability, and the taxpayer has been issued a notice under I.R.C. Sec. 6320 entitling the taxpayer to request a hearing with the IRS Office of Appeals contesting the lien filing, and to further appeal to the Tax Court if the IRS determines to sustain the lien filing. In the course of the hearing, the taxpayer is entitled to contest the underlying tax liability because the taxpayer has had no prior opportunity to contest the liability. This is not a delinquent tax because it is not a final tax liability. Should the taxpayer seek tax court review, this will not be a final tax liability until the taxpayer has exercised all judicial appeal rights.

(iii) The taxpayer has entered into an installment agreement pursuant to I.R.C. Sec. 6159. The taxpayer is making timely payments and is in full compliance with the agreement terms. The taxpayer is not delinquent because the taxpayer is not currently required to make full payment.

(iv) The taxpayer has filed for bankruptcy protection. The taxpayer is not delinquent because enforced collection action is stayed under 11 U.S.C. 362 (the Bankruptcy Code).

(ii) The Offeror has ( ) has not ( ), within a three-year period preceding this offer, had one or more contracts terminated for default by any Federal agency.

(2) Principal, for the purposes of this certification, means an officer, director, owner, partner, or a person having primary management or supervisory responsibilities within a business entity (e.g., general manager; plant manager; head of a division or business segment; and similar positions).

(b) The Offeror shall provide immediate written notice to the Contracting Officer if, at any time prior to contract award, the Offeror learns that its certification was erroneous when submitted or has become erroneous by reason of changed circumstances.

(c) A certification that any of the items in paragraph (a) of this provision exists will not necessarily result in withholding of an award under this solicitation. However, the certification will be considered in connection with a determination of the Offeror's responsibility. Failure of the Offeror to furnish a certification or provide such additional information as requested by the Contracting Officer may render the Offeror nonresponsible.

(d) Nothing contained in the foregoing shall be construed to require establishment of a system of records in order to render, in good faith, the certification required by paragraph (a) of this provision. The knowledge and information of an Offeror is not required to exceed that which is normally possessed by a prudent person in the ordinary course of business dealings.

(e) The certification in paragraph (a) of this provision is a material representation of fact upon which reliance was placed when making award. If it is later determined that the Offeror knowingly rendered an erroneous certification, in addition to other remedies available to the Government, the Contracting Officer may terminate the contract resulting from this solicitation for default.

(End of provision)

52.209-7 INFORMATION REGARDING RESPONSIBILITY MATTERS (JAN 2011)

(a) Definitions. As used in this provision--

Administrative proceeding means a non-judicial process that is adjudicatory in nature in order to make a determination of fault or liability (e.g., Securities and Exchange Commission Administrative Proceedings, Civilian Board of Contract Appeals Proceedings, and Armed Services Board of Contract Appeals Proceedings). This includes administrative proceedings at the Federal and State level but only in connection with performance of a Federal contract or grant. It does not include agency actions such as contract audits, site visits, corrective plans, or inspection of deliverables.

Federal contracts and grants with total value greater than $10,000,000 means--

(1) The total value of all current, active contracts and grants, including all priced options; and

(2) The total value of all current, active orders including all priced options under indefinite-delivery, indefinite-quantity, 8(a), or requirements contracts (including task and delivery and multiple-award Schedules).

Principal means an officer, director, owner, partner, or a person having primary management or supervisory responsibilities within a business entity (e.g., general manager; plant manager; head of a division or business segment; and similar positions).

(b) The offeror ( ) has ( ) does not have current active Federal contracts and grants with total value greater than $10,000,000.

(c) If the offeror checked “has” in paragraph (b) of this provision, the offeror represents, by submission of this offer, that the information it has entered in the Federal Awardee Performance and Integrity Information System (FAPIIS) is current, accurate, and complete as of the date of submission of this offer with regard to the following information:

(1) Whether the offeror, and/or any of its principals, has or has not, within the last five years, in connection with the award to or performance by the offeror of a Federal contract or grant, been the subject of a proceeding, at the Federal or State level that resulted in any of the following dispositions:

(i) In a criminal proceeding, a conviction.

(ii) In a civil proceeding, a finding of fault and liability that results in the payment of a monetary fine, penalty, reimbursement, restitution, or damages of $5,000 or more.

(iii) In an administrative proceeding, a finding of fault and liability that results in--

(A) The payment of a monetary fine or penalty of $5,000 or more; or

(B) The payment of a reimbursement, restitution, or damages in excess of $100,000.

(iv) In a criminal, civil, or administrative proceeding, a disposition of the matter by consent or compromise with an acknowledgment of fault by the Contractor if the proceeding could have led to any of the outcomes specified in paragraphs (c)(1)(i), (c)(1)(ii), or (c)(1)(iii) of this provision.

(2) If the offeror has been involved in the last five years in any of the occurrences listed in (c)(1) of this provision, whether the offeror has provided the requested information with regard to each occurrence.

(d) The offeror shall post the information in paragraphs (c)(1)(i) through (c)(1)(iv) of this provision in FAPIIS as required through maintaining an active registration in the Central Contractor Registration database at http://www.ccr.gov (see 52.204-7).

(End of provision)

52.225-20 PROHIBITION ON CONDUCTING RESTRICTED BUSINESS OPERATIONS IN SUDAN--CERTIFICATION (AUG 2009)

(a) Definitions. As used in this provision--

Business operations means engaging in commerce in any form, including by acquiring, developing, maintaining, owning, selling, possessing, leasing, or operating equipment, facilities, personnel, products, services, personal property, real property, or any other apparatus of business or commerce.

Marginalized populations of Sudan means--

(1) Adversely affected groups in regions authorized to receive assistance under section 8(c) of the Darfur Peace and Accountability Act (Pub. L. 109-344) (50 U.S.C. 1701 note); and

(2) Marginalized areas in Northern Sudan described in section 4(9) of such Act.

Restricted business operations means business operations in Sudan that include power production activities, mineral extraction activities, oil-related activities, or the production of military equipment, as those terms are defined in the Sudan Accountability and Divestment Act of 2007 (Pub. L. 110-174). Restricted business operations do not include business operations that the person (as that term is defined in Section 2 of the Sudan Accountability and Divestment Act of 2007) conducting the business can demonstrate--

(1) Are conducted under contract directly and exclusively with the regional government of southern Sudan;

(2) Are conducted pursuant to specific authorization from the Office of Foreign Assets Control in the Department of the Treasury, or are expressly exempted under Federal law from the requirement to be conducted under such authorization;

(3) Consist of providing goods or services to marginalized populations of Sudan;

(4) Consist of providing goods or services to an internationally recognized peacekeeping force or humanitarian organization;

(5) Consist of providing goods or services that are used only to promote health or education; or

(6) Have been voluntarily suspended.

(b) Certification. By submission of its offer, the offeror certifies that the offeror does not conduct any restricted business operations in Sudan.

(End of provision)

52.225-25 PROHIBITION ON ENGAGING IN SANCTIONED ACTIVITIES RELATING TO IRAN--CERTIFICATION (SEP 2010)

(a) Definition.

Person--

(1) Means--

(i) A natural person;

(ii) A corporation, business association, partnership, society, trust, financial institution, insurer, underwriter, guarantor, and any other business organization, any other nongovernmental entity, organization, or group, and any governmental entity operating as a business enterprise; and

(iii) Any successor to any entity described in paragraph (1)(ii) of this definition; and

(2) Does not include a government or governmental entity that is not operating as a business enterprise.

(b) Certification. Except as provided in paragraph (c) of this provision or if a waiver has been granted in accordance with FAR 25.703-2(d), by submission of its offer, the offeror certifies that the offeror, or any person owned or controlled by the offeror, does not engage in any activities for which sanctions may be imposed under section 5 of the Iran Sanctions Act of 1996. These sanctioned activities are in the areas of development of the petroleum resources of Iran, production of refined petroleum products in Iran, sale and provision of refined petroleum products to Iran, and contributing to Iran's ability to acquire or develop certain weapons.

(c) Exception for trade agreements. The certification requirement of paragraph (b) of this provision does not apply if--

(1) This solicitation includes a trade agreements certification (e.g., 52.225-4, 52.225-11 or comparable agency provision); and

(2) The offeror has certified that all the offered products to be supplied are designated country end products or designated country construction material.

(End of provision)

252.204-7007 ALTERNATE A, ANNUAL REPRESENTATIONS AND CERTIFICATIONS (SEP 2011)

Substitute the following paragraphs (d) and (e) for paragraph (d) of the provision at FAR 52.204-8:

(d)(1) The following representations or certifications in ORCA are applicable to this solicitation as indicated:

(i) 252.209-7001, Disclosure of Ownership or Control by the Government of a Terrorist Country. Applies to all solicitations expected to result in contracts of $150,000 or more.

(ii) 252.209-7005, Reserve Officer Training Corps and Military Recruiting on Campus. Applies to all solicitations and contracts with institutions of higher education.

(iii) 252.216-7003, Economic Price Adjustment-Wage Rates or Material Prices Controlled by a Foreign Government. Applies to fixed-price supply and service contracts when the contract is to be performed wholly or in part in a foreign country, and a foreign government controls wage rates or material prices and may during contract performance impose a mandatory change in wages or prices of materials.

(iv) 252.225-7042, Authorization to Perform. Applies to all solicitations when performance will be wholly or in part in a foreign country.

(v) 252.229-7003, Tax Exemptions (Italy). Applies to solicitations and contracts when contract performance will be in Italy.

(vi) 252.229-7005, Tax Exemptions (Spain). Applies to solicitations and contracts when contract performance will be in Spain.

(vii) 252.247-7022, Representation of Extent of Transportation by Sea. Applies to all solicitations except those for direct purchase of ocean transportation services or those with an anticipated value at or below the simplified acquisition threshold.

(2) The following representations or certifications in ORCA are applicable to this solicitation as indicated by the Contracting Officer: [Contracting Officer check as appropriate.]

____ (i) 252.209-7002, Disclosure of Ownership or Control by a Foreign Government.

____ (ii) 252.225-7000, Buy American Act--Balance of Payments Program Certificate.

____ (iii) 252.225-7020, Trade Agreements Certificate.

____Use with Alternate I.

____ (iv) 252.225-7022, Trade Agreements Certificate--Inclusion of Iraqi End Products.

____ (v) 252.225-7031, Secondary Arab Boycott of Israel.

____ (vi) 252.225-7035, Buy American Act--Free Trade Agreements--Balance of Payments Program Certificate.

____ Use with Alternate I.

____ Use with Alternate II.

____ Use with Alternate III.

(e) The offeror has completed the annual representations and certifications electronically via the Online representations and Certifications Application (ORCA) Web site at https://orca.bpn.gov/. After reviewing the ORCA database information, the offeror verifies by submission of the offer that the representations and certifications currently posted electronically that apply to this solicitation as indicated in FAR 52.204-8(c) and paragraph (d) of this provision have been entered or updated within the last 12 months, are current, accurate, complete, and applicable to this solicitation (including the business size standard applicable to theNAICS code referenced for this solicitation), as of the date of this offer, and are incorporated in this offer by reference (see FAR 4.1201); except for the changes identified below [offeror to insert changes, identifying change by provision number, title, date]. These amended representation(s) and/or certification(s) are also incorporated in this offer and are current, accurate, and complete
as of the date of this offer.

FAR/DFARS Clause #	Title	Date	Change

Any changes provided by the offeror are applicable to this solicitation only, and do not result in an update to the representations and certifications posted on ORCA.

(End of provision)

252.209-7001 DISCLOSURE OF OWNERSHIP OR CONTROL BY THE GOVERNMENT OF A TERRORIST COUNTRY (JAN 2009)

(a) "Definitions."

As used in this provision --

(a) "Government of a terrorist country" includes the state and the government of a terrorist country, as well as any political subdivision, agency, or instrumentality thereof.

(2) "Terrorist country" means a country determined by the Secretary of State, under section 6(j)(1)(A) of the Export Administration Act of 1979 (50 U.S.C. App. 2405(j)(i)(A)), to be a country the government of which has repeatedly provided support for such acts of international terrorism. As of the date of this provision, terrorist countries subject to this provision include: Cuba, Iran, Sudan, and Syria.

(3) "Significant interest" means --

(i) Ownership of or beneficial interest in 5 percent or more of the firm's or subsidiary's securities. Beneficial interest includes holding 5 percent or more of any class of the firm's securities in "nominee shares," "street names," or some other method of holding securities that does not disclose the beneficial owner;

(ii) Holding a management position in the firm, such as a director or officer;

(iii) Ability to control or influence the election, appointment, or tenure of directors or officers in the firm;

(iv) Ownership of 10 percent or more of the assets of a firm such as equipment, buildings, real estate, or other tangible assets of the firm; or

(v) Holding 50 percent or more of the indebtness of a firm.

(b) "Prohibition on award."

In accordance with 10 U.S.C. 2327, no contract may be awarded to a firm or a subsidiary of a firm if the government of a terrorist country has a significant interest in the firm or subsidiary or, in the case of a subsidiary, the firm that owns the subsidiary, unless a waiver is granted by the Secretary of Defense.

(c) "Disclosure."

If the government of a terrorist country has a significant interest in the Offeror or a subsidiary of the Offeror, the Offeror shall disclosure such interest in an attachment to its offer. If the Offeror is a subsidiary, it shall also disclose any significant interest the government of a terrorist country has in any firm that owns or controls the subsidiary. The disclosure shall include --

(1) Identification of each government holding a significant interest; and

(2) A description of the significant interest held by each government.

(End of provision)

252.225-7023 PREFERENCE FOR PRODUCTS OR SERVICES FROM IRAQ OR AFGHANISTAN (APR 2010)

(a) Definitions. Product from Iraq or Afghanistan and service from Iraq or Afghanistan, as used in this provision, are defined in the clause of this solicitation entitled ``Requirement for Products or Services from Iraq or Afghanistan" (DFARS 252.225-7024).

(b) Representation. The offeror represents that all products or services to be delivered under a contract resulting from this solicitation are products from Iraq or Afghanistan or services from Iraq or Afghanistan, except those listed in--

(1) Paragraph (c) of this provision; or

(2) Paragraph (c)(2) of the provision entitled Trade Agreements Certificate," or ``Trade Agreements Certificate--Inclusion of Iraqi End Products," if included in this solicitation.

(c) Other products or services. The following offered products or services are not products from Iraq or Afghanistan or services from Iraq or Afghanistan:

(Country of Origin)

(Line Item Number)

(d) Evaluation. For the purpose of evaluating competitive offers, the Contracting Officer will increase by 50 percent the prices of offers of products or services that are not products or services from Iraq or Afghanistan.

(End of provision)

252.225-7031 SECONDARY ARAB BOYCOTT OF ISRAEL (JUN 2005)

(a) Definitions. As used in this provision--

(1) Foreign person means any person (including any individual, partnership, corporation, or other form of association) other than a United States person.

(2) United States means the 50 States, the District of Columbia, outlying areas, and the outer Continental Shelf as defined in 43 U.S.C. 1331.

(3) United States person is defined in 50 U.S.C. App. 2415(2) and means--

(i) Any United States resident or national (other than an individual resident outside the United States who is employed by other than a United States person);

(ii) Any domestic concern (including any permanent domestic establishment of any foreign concern); and

(iii) Any foreign subsidiary or affiliate (including any permanent foreign establishment) of any domestic concern that is controlled in fact by such domestic concern.

(b) Certification. If the offeror is a foreign person, the offeror certifies, by submission of an offer, that it--

(1) Does not comply with the Secondary Arab Boycott of Israel; and

(2) Is not taking or knowingly agreeing to take any action, with respect to the Secondary Boycott of Israel by Arab countries, which 50 U.S.C. App. 2407(a) prohibits a United States person from taking.

(End of provision)

252.225-7042 AUTHORIZATION TO PERFORM (APR 2003)

The offeror represents that it has been duly authorized to operate and to do business in the country or countries in which the contract is to be performed.

(End of provision)

252.247-7022 REPRESENTATION OF EXTENT OF TRANSPORTATION BY SEA (AUG 1992)

(a) The Offeror shall indicate by checking the appropriate blank in paragraph (b) of this provision whether transportation of supplies by sea is anticipated under the resultant contract. The term supplies is defined in the Transportation of Supplies by Sea clause of this solicitation.

(b) Representation. The Offeror represents that it:

____ (1) Does anticipate that supplies will be transported by sea in the performance of any contract or subcontract resulting from this solicitation.

____ (2) Does not anticipate that supplies will be transported by sea in the performance of any contract or subcontract resulting from this solicitation.

(c) Any contract resulting from this solicitation will include the Transportation of Supplies by Sea clause. If the Offeror represents that it will not use ocean transportation, the resulting contract will also include the Defense FAR Supplement clause at 252.247-7024, Notification of Transportation of Supplies by Sea.

(End of provision)

Section 00700 - Contract Clauses

CLAUSES INCORPORATED BY REFERENCE

52.202-1	Definitions	JUL 2004
52.203-3	Gratuities	APR 1984
52.203-5	Covenant Against Contingent Fees	APR 1984
52.203-7	Anti-Kickback Procedures	OCT 2010
52.203-8	Cancellation, Rescission, and Recovery of Funds for Illegal or Improper Activity	JAN 1997
52.203-10	Price Or Fee Adjustment For Illegal Or Improper Activity	JAN 1997
52.203-12	Limitation On Payments To Influence Certain Federal Transactions	OCT 2010
52.203-13	Contractor Code of Business Ethics and Conduct	APR 2010
52.204-7	Central Contractor Registration	APR 2008
52.204-9	Personal Identity Verification of Contractor Personnel	JAN 2011
52.215-2	Audit and Records--Negotiation	OCT 2010
52.215-11	Price Reduction for Defective Certified Cost or Pricing Data--Modifications	AUG 2011
52.215-13	Subcontractor Certified Cost or Pricing Data--Modifications	OCT 2010
52.222-29	Notification Of Visa Denial	JUN 2003
52.222-50	Combating Trafficking in Persons	FEB 2009
52.225-13	Restrictions on Certain Foreign Purchases	JUN 2008
52.225-14	Inconsistency Between English Version And Translation Of Contract	FEB 2000
52.228-3	Worker's Compensation Insurance (Defense Base Act)	APR 1984
52.229-6	Taxes--Foreign Fixed-Price Contracts	JUN 2003
52.232-5	Payments under Fixed-Price Construction Contracts	SEP 2002
52.232-17	Interest	OCT 2010
52.232-27	Prompt Payment for Construction Contracts	OCT 2008
52.233-1	Disputes	JUL 2002
52.233-3	Protest After Award	AUG 1996
52.233-4	Applicable Law for Breach of Contract Claim	OCT 2004
52.236-2	Differing Site Conditions	APR 1984
52.236-3	Site Investigation and Conditions Affecting the Work	APR 1984
52.236-6	Superintendence by the Contractor	APR 1984
52.236-7	Permits and Responsibilities	NOV 1991
52.236-8	Other Contracts	APR 1984
52.236-9	Protection of Existing Vegetation, Structures, Equipment, Utilities, and Improvements	APR 1984
52.236-10	Operations and Storage Areas	APR 1984
52.236-11	Use and Possession Prior to Completion	APR 1984
52.236-12	Cleaning Up	APR 1984
52.236-15	Schedules for Construction Contracts	APR 1984
52.236-17	Layout of Work	APR 1984
52.236-21	Specifications and Drawings for Construction	FEB 1997
52.236-26	Preconstruction Conference	FEB 1995
52.242-13	Bankruptcy	JUL 1995
52.244-6	Subcontracts for Commercial Items	DEC 2010
52.246-21	Warranty of Construction	MAR 1994
52.248-3	Value Engineering-Construction	OCT 2010
52.249-2 Alt I	Termination for Convenience of the Government (Fixed-Price) (May 2004) - Alternate I	SEP 1996

52.249-10	Default (Fixed-Price Construction)	APR 1984
52.253-1	Computer Generated Forms	JAN 1991
252.201-7000	Contracting Officer's Representative	DEC 1991
252.203-7000	Requirements Relating to Compensation of Former DoD Officials	SEP 2011
252.203-7001	Prohibition On Persons Convicted of Fraud or Other Defense-Contract-Related Felonies	DEC 2008
252.203-7002	Requirement to Inform Employees of Whistleblower Rights	JAN 2009
252.203-7003	Agency Office of the Inspector General	SEP 2010
252.204-7000	Disclosure Of Information	DEC 1991
252.204-7003	Control Of Government Personnel Work Product	APR 1992
252.204-7004 Alt A	Central Contractor Registration Alternate A	SEP 2007
252.205-7000	Provision Of Information To Cooperative Agreement Holders	DEC 1991
252.209-7004	Subcontracting With Firms That Are Owned or Controlled By The Government of a Terrorist Country	DEC 2006
252.215-7000	Pricing Adjustments	DEC 1991
252.222-7002	Compliance With Local Labor Laws (Overseas)	JUN 1997
252.222-7006	Restrictions on the Use of Mandatory Arbitration Agreements	DEC 2010
252.225-7005	Identification Of Expenditures In The United States	JUN 2005
252.225-7041	Correspondence in English	JUN 1997
252.225-7045 Alt II	Balance of Payments Program--Construction Material Under Trade Agreements (Oct 2010) Alternate II	JUN 2011
252.229-7000	Invoices Exclusive of Taxes or Duties	JUN 1997
252.232-7008	Assignment of Claims (Overseas)	JUN 1997
252.232-7010	Levies on Contract Payments	DEC 2006
252.233-7001	Choice of Law (Overseas)	JUN 1997
252.236-7000	Modification Proposals-Price Breakdown	DEC 1991
252.243-7002	Requests for Equitable Adjustment	MAR 1998
252.247-7023	Transportation of Supplies by Sea	MAY 2002

CLAUSES INCORPORATED BY FULL TEXT

52.204-10 REPORTING EXECUTIVE COMPENSATION AND FIRST-TIER SUBCONTRACT AWARDS (JUL 2010)

(a) Definitions. As used in this clause:

Executive means officers, managing partners, or any other employees in management positions.

First-tier subcontract means a subcontract awarded directly by a Contractor to furnish supplies or services (including construction) for performance of a prime contract, but excludes supplier agreements with vendors, such as long-term arrangements for materials or supplies that would normally be applied to a Contractor's general and administrative expenses or indirect cost.

Total compensation means the cash and noncash dollar value earned by the executive during the Contractor's preceding fiscal year and includes the following (for more information see 17 CFR 229.402(c)(2)):

(1) Salary and bonus.

(2) Awards of stock, stock options, and stock appreciation rights. Use the dollar amount recognized for financial statement reporting purposes with respect to the fiscal year in accordance with the Statement of Financial Accounting Standards No. 123 (Revised 2004) (FAS 123R), Shared Based Payments.

(3) Earnings for services under non-equity incentive plans. This does not include group life, health, hospitalization or medical reimbursement plans that do not discriminate in favor of executives, and are available generally to all salaried employees.

(4) Change in pension value. This is the change in present value of defined benefit and actuarial pension plans.

(5) Above-market earnings on deferred compensation which is not tax-qualified.

(6) Other compensation, if the aggregate value of all such other compensation (e.g., severance, termination payments, value of life insurance paid on behalf of the employee, perquisites or property) for the executive exceeds $10,000.

(b) Section 2(d)(2) of the Federal Funding Accountability and Transparency Act of 2006 (Pub. L. 109-282), as amended by section 6202 of the Government Funding Transparency Act of 2008 (Pub. L. 110-252), requires the Contractor to report information on subcontract awards. The law requires all reported information be made public, therefore, the Contractor is responsible for notifying its subcontractors that the required information will be made public.

(c)(1) Unless otherwise directed by the contracting officer, by the end of the month following the month of award of a first-tier subcontract with a value of $25,000 or more, (and any modifications to these subcontracts that change previously reported data), the Contractor shall report the following information at http://www.fsrs.gov for each first-tier subcontract. (The Contractor shall follow the instructions at http://www.fsrs.gov to report the data.)

(i) Unique identifier (DUNS Number) for the subcontractor receiving the award and for the subcontractor's parent company, if the subcontractor has a parent company.

(ii) Name of the subcontractor.

(iii) Amount of the subcontract award.

(iv) Date of the subcontract award.

(v) A description of the products or services (including construction) being provided under the subcontract, including the overall purpose and expected outcomes or results of the subcontract.

(vi) Subcontract number (the subcontract number assigned by the Contractor).

(vii) Subcontractor's physical address including street address, city, state, and country. Also include the nine-digit zip code and congressional district.

(viii) Subcontractor's primary performance location including street address, city, state, and country. Also include the nine-digit zip code and congressional district.

(ix) The prime contract number, and order number if applicable.

(x) Awarding agency name and code.

(xi) Funding agency name and code.

(xii) Government contracting office code.

(xiii) Treasury account symbol (TAS) as reported in FPDS.

(xiv) The applicable North American Industry Classification System code (NAICS).

(2) By the end of the month following the month of a contract award, and annually thereafter, the Contractor shall report the names and total compensation of each of the five most highly compensated executives for the Contractor's preceding completed fiscal year at http://www.ccr.gov, if--

(i) In the Contractor's preceding fiscal year, the Contractor received--

(A) 80 percent or more of its annual gross revenues from Federal contracts (and subcontracts), loans, grants (and subgrants) and cooperative agreements; and

(B) $25,000,000 or more in annual gross revenues from Federal contracts (and subcontracts), loans, grants (and subgrants) and cooperative agreements; and

(ii) The public does not have access to information about the compensation of the executives through periodic reports filed under section 13(a) or 15(d) of the Securities Exchange Act of 1934 (15 U.S.C. 78m(a), 78o(d)) or section 6104 of the Internal Revenue Code of 1986. (To determine if the public has access to the compensation information, see the U.S. Security and Exchange Commission total compensation filings at http://www.sec.gov/answers/execomp.htm.)

(3) Unless otherwise directed by the contracting officer, by the end of the month following the month of a first-tier subcontract with a value of $25,000 or more, and annually thereafter, the Contractor shall report the names and total compensation of each of the five most highly compensated executives for each first-tier subcontractor for the subcontractor's preceding completed fiscal year at http://www.fsrs.gov, if--

(i) In the subcontractor's preceding fiscal year, the subcontractor received--

(A) 80 percent or more of its annual gross revenues from Federal contracts (and subcontracts), loans, grants (and subgrants) and cooperative agreements; and

(B) $25,000,000 or more in annual gross revenues from Federal contracts (and subcontracts), loans, grants (and subgrants) and cooperative agreements; and

(ii) The public does not have access to information about the compensation of the executives through periodic reports filed under section 13(a) or 15(d) of the Securities Exchange Act of 1934 (15 U.S.C. 78m(a), 78o(d)) or section 6104 of the Internal Revenue Code of 1986. (To determine if the public has access to the compensation information, see the U.S. Security and Exchange Commission total compensation filings at http://www.sec.gov/answers/execomp.htm.)

(d)(1) If the Contractor in the previous tax year had gross income, from all sources, under $300,000, the Contractor is exempt from the requirement to report subcontractor awards.

(2) If a subcontractor in the previous tax year had gross income from all sources under $300,000, the Contractor does not need to report awards to that subcontractor.

(e) Phase-in of reporting of subcontracts of $25,000 or more.

(1) Until September 30, 2010, any newly awarded subcontract must be reported if the prime contract award amount was $20,000,000 or more.

(2) From October 1, 2010, until February 28, 2011, any newly awarded subcontract must be reported if the prime contract award amount was $550,000 or more.

(3) Starting March 1, 2011, any newly awarded subcontract must be reported if the prime contract award amount was $25,000 or more.

(End of clause)

52.209-6 PROTECTING THE GOVERNMENT'S INTEREST WHEN SUBCONTRACTING WITH CONTRACTORS DEBARRED, SUSPENDED, OR PROPOSED FOR DEBARMENT (DEC 2010)

(a) Definition. Commercially available off-the-shelf (COTS) item, as used in this clause--

(1) Means any item of supply (including construction material) that is--

(i) A commercial item (as defined in paragraph (1) of the definition in FAR 2.101);

(ii) Sold in substantial quantities in the commercial marketplace; and

(iii) Offered to the Government, under a contract or subcontract at any tier, without modification, in the same form in which it is sold in the commercial marketplace; and

(2) Does not include bulk cargo, as defined in section 3 of the Shipping Act of 1984 (46 U.S.C. App. 1702), such as agricultural products and petroleum products.

(b) The Government suspends or debars Contractors to protect the Government's interests. Other than a subcontract for a commercially available off-the-shelf item, the Contractor shall not enter into any subcontract, in excess of $30,000 with a Contractor that is debarred, suspended, or proposed for debarment by any executive agency unless there is a compelling reason to do so.

(c) The Contractor shall require each proposed subcontractor whose subcontract will exceed $30,000, other than a subcontractor providing a commercially available off-the-shelf item, to disclose to the Contractor, in writing, whether as of the time of award of the subcontract, the subcontractor, or its principals, is or is not debarred, suspended, or proposed for debarment by the Federal Government.

(d) A corporate officer or a designee of the Contractor shall notify the Contracting Officer, in writing, before entering into a subcontract with a party (other than a subcontractor providing a commercially available off-the-shelf item) that is debarred, suspended, or proposed for debarment (see FAR 9.404 for information on the Excluded Parties List System). The notice must include the following:

(e) Subcontracts. Unless this is a contract for the acquisition of commercial items, the Contractor shall include the requirements of this clause, including this paragraph (e) (appropriately modified for the identification of the parties), in each subcontract that--

(1) Exceeds $30,000 in value; and

(2) Is not a subcontract for commercially available off-the-shelf items.

(End of clause)

52.209-9 Updates of Publicly Available Information Regarding Responsibility Matters (JAN 2011)

(a) The Contractor shall update the information in the Federal Awardee Performance and Integrity Information System (FAPIIS) on a semi-annual basis, throughout the life of the contract, by posting the required information in the Central Contractor Registration database at http://www.ccr.gov.

(b)(1) The Contractor will receive notification when the Government posts new information to the Contractor's record.

(2) The Contractor will have an opportunity to post comments regarding information that has been posted by the Government. The comments will be retained as long as the associated information is retained, i.e., for a total period of 6 years. Contractor comments will remain a part of the record unless the Contractor revises them.

(3)(i) Public requests for system information posted prior to April 15, 2011, will be handled under Freedom of Information Act procedures, including, where appropriate, procedures promulgated under E.O. 12600.

(ii) As required by section 3010 of Public Law 111-212, all information posted in FAPIIS on or after April 15, 2011, except past performance reviews, will be publicly available.

(End of clause)

52.232-34 PAYMENT BY ELECTRONIC FUNDS TRANSFER—OTHER THAN CENTRAL CONTRACTOR REGISTRATION (MAY 1999)

(a) Method of payment. (1) All payments by the Government under this contract shall be made by electronic funds transfer (EFT) except as provided in paragraph (a)(2) of this clause. As used in this clause, the term “EFT” refers to the funds transfer and may also include the payment information transfer.

(2) In the event the Government is unable to release one or more payments by EFT, the Contractor agrees to either--

(i) Accept payment by check or some other mutually agreeable method of payment; or

(ii) Request the Government to extend payment due dates until such time as the Government makes payment by EFT (but see paragraph (d) of this clause).

(b) Mandatory submission of Contractor's EFT information. (1) The Contractor is required to provide the Government with the information required to make payment by EFT (see paragraph (j) of this clause). The Contractor shall provide this information directly to the office designated in this contract to receive that information NO LATER THAN 15 DAYS PRIOR TO SUBMISSION OF THE FIRST REQUEST FOR PAYMENT. If not otherwise specified in this contract, the payment office is the designated office for receipt of the Contractor's EFT information. If more than one designated office is named for the contract, the Contractor shall provide a separate notice to each office. In the event that the EFT information changes, the Contractor shall be responsible for providing the updated information to the designated office(s).

(2) If the Contractor provides EFT information applicable to multiple contracts, the Contractor shall specifically state the applicability of this EFT information in terms acceptable to the designated office. However, EFT information supplied to a designated office shall be applicable only to contracts that identify that designated office as the office to receive EFT information for that contract.

(c) Mechanisms for EFT payment. The Government may make payment by EFT through either the Automated Clearing House (ACH) network, subject to the rules of the National Automated Clearing House Association, or the Fedwire Transfer System. The rules governing Federal payments through the ACH are contained in 31 CFR part 210.

(d) Suspension of payment. (1) The Government is not required to make any payment under this contract until after receipt, by the designated office, of the correct EFT payment information from the Contractor. Until receipt of the correct EFT information, any invoice or contract financing request shall be deemed not to be a proper invoice for the purpose of prompt payment under this contract. The prompt payment terms of the contract regarding notice of an improper invoice and delays in accrual of interest penalties apply.

(2) If the EFT information changes after submission of correct EFT information, the Government shall begin using the changed EFT information no later than 30 days after its receipt by the designated office to the extent payment is made by EFT. However, the Contractor may request that no further payments be made until the updated EFT information is implemented by the payment office. If such suspension would result in a late payment under the prompt payment terms of this contract, the Contractor's request for suspension shall extend the due date for payment by the number of days of the suspension.

(e) Liability for uncompleted or erroneous transfers. (1) If an uncompleted or erroneous transfer occurs because the Government used the Contractor's EFT information incorrectly, the Government remains responsible for--

(i) Making a correct payment;

(ii) Paying any prompt payment penalty due; and

(iii) Recovering any erroneously directed funds.

(2) If an uncompleted or erroneous transfer occurs because the Contractor's EFT information was incorrect, or was revised within 30 days of Government release of the EFT payment transaction instruction to the Federal Reserve System, and--

(i) If the funds are no longer under the control of the payment office, the Government is deemed to have made payment and the Contractor is responsible for recovery of any erroneously directed funds; or

(ii) If the funds remain under the control of the payment office, the Government shall not make payment and the provisions of paragraph (d) shall apply.

(f) EFT and prompt payment. A payment shall be deemed to have been made in a timely manner in accordance with the prompt payment terms of this contract if, in the EFT payment transaction instruction released to the Federal Reserve System, the date specified for settlement of the payment is on or before the prompt payment due date, provided the specified payment date is a valid date under the rules of the Federal Reserve System.

(g) EFT and assignment of claims. If the Contractor assigns the proceeds of this contract as provided for in the assignment of claims terms of this contract, the Contractor shall require as a condition of any such assignment, that the assignee shall provide the EFT information required by paragraph (j) of this clause to the designated office, and shall be paid by EFT in accordance with the terms of this clause. In all respects, the requirements of this clause shall apply to the assignee as if it were the Contractor. EFT information that shows the ultimate recipient of the transfer to be other than the Contractor, in the absence of a proper assignment of claims acceptable to the Government, is incorrect EFT information within the meaning of paragraph (d) of this clause.

(h) Liability for change of EFT information by financial agent. The Government is not liable for errors resulting from changes to EFT information provided by the Contractor's financial agent.

(i) Payment information. The payment or disbursing office shall forward to the Contractor available payment information that is suitable for transmission as of the date of release of the EFT instruction to the Federal Reserve System. The Government may request the Contractor to designate a desired format and method(s) for delivery of payment information from a list of formats and methods the payment office is capable of executing. However, the Government does not guarantee that any particular format or method of delivery is available at any particular payment office and retains the latitude to use the format and delivery method most convenient to the Government. If

the Government makes payment by check in accordance with paragraph (a) of this clause, the Government shall mail the payment information to the remittance address in the contract.

(j) EFT information. The Contractor shall provide the following information to the designated office. The Contractor may supply this data for this or multiple contracts (see paragraph (b) of this clause). The Contractor shall designate a single financial agent per contract capable of receiving and processing the EFT information using the EFT methods described in paragraph (c) of this clause.

(1) The contract number (or other procurement identification number).

(2) The Contractor's name and remittance address, as stated in the contract(s).

(3) The signature (manual or electronic, as appropriate), title, and telephone number of the Contractor official authorized to provide this information.

(4) The name, address, and 9-digit Routing Transit Number of the Contractor's financial agent.

(5) The Contractor's account number and the type of account (checking, saving, or lockbox).

(6) If applicable, the Fedwire Transfer System telegraphic abbreviation of the Contractor's financial agent.

(7) If applicable, the Contractor shall also provide the name, address, telegraphic abbreviation, and 9-digit Routing Transit Number of the correspondent financial institution receiving the wire transfer payment if the Contractor's financial agent is not directly on-line to the Fedwire Transfer System; and, therefore, not the receiver of the wire transfer payment.

(End of clause)

52.236-1 PERFORMANCE OF WORK BY THE CONTRACTOR (APR 1984)

The Contractor shall perform on the site, and with its own organization, work equivalent to at least TWELVE (12%) percent of the total amount of work to be performed under the contract. This percentage may be reduced by a supplemental agreement to this contract if, during performing the work, the Contractor requests a reduction and the Contracting Officer determines that the reduction would be to the advantage of the Government.

(End of clause)

52.236-13 ACCIDENT PREVENTION (NOV 1991)

(a) The Contractor shall provide and maintain work environments and procedures which will

(1) safeguard the public and Government personnel, property, materials, supplies, and equipment exposed to Contractor operations and activities;

(2) avoid interruptions of Government operations and delays in project completion dates; and

(3) control costs in the performance of this contract.

(b) For these purposes on contracts for construction or dismantling, demolition, or removal of improvements, the Contractor shall-

(1) Provide appropriate safety barricades, signs, and signal lights;

(2) Comply with the standards issued by the Secretary of Labor at 29 CFR Part 1926 and 29 CFR Part 1910; and

(3) Ensure that any additional measures the Contracting Officer determines to be reasonably necessary for the purposes are taken.

(c) If this contract is for construction or dismantling, demolition or removal of improvements with any Department of Defense agency or component, the Contractor shall comply with all pertinent provisions of the latest version of U.S. Army Corps of Engineers Safety and Health Requirements Manual, EM 385-1-1, in effect on the date of the solicitation.

(d) Whenever the Contracting Officer becomes aware of any noncompliance with these requirements or any condition which poses a serious or imminent danger to the health or safety of the public or Government personnel, the Contracting Officer shall notify the Contractor orally, with written confirmation, and request immediate initiation of corrective action. This notice, when delivered to the Contractor or the Contractor's representative at the work site, shall be deemed sufficient notice of the noncompliance and that corrective action is required. After receiving the notice, the Contractor shall immediately take corrective action. If the Contractor fails or refuses to promptly take corrective action, the Contracting Officer may issue an order stopping all or part of the work until satisfactory corrective action has been taken. The Contractor shall not be entitled to any equitable adjustment of the contract price or extension of the performance schedule on any stop work order issued under this clause.

(e) The Contractor shall insert this clause, including this paragraph (e), with appropriate changes in the designation of the parties, in subcontracts.

(End of clause)

52.243-4 CHANGES (JUN 2007)

(a) The Contracting Officer may, at any time, without notice to the sureties, if any, by written order designated or indicated to be a change order, make changes in the work within the general scope of the contract, including changes--

(1) In the specifications (including drawings and designs);

(2) In the method or manner of performance of the work;

(3) In the Government-furnished property or services; or

(4) Directing acceleration in the performance of the work.

(b) Any other written or oral order (which, as used in this paragraph (b), includes direction, instruction, interpretation, or determination) from the Contracting Officer that causes a change shall be treated as a change order under this clause; provided, that the Contractor gives the Contracting Officer written notice stating

(1) the date, circumstances, and source of the order and

(2) that the Contractor regards the order as a change order.

(c) Except as provided in this clause, no order, statement, or conduct of the Contracting Officer shall be treated as a change under this clause or entitle the Contractor to an equitable adjustment.

(d) If any change under this clause causes an increase or decrease in the Contractor's cost of, or the time required for, the performance of any part of the work under this contract, whether or not changed by any such order, the Contracting Officer shall make an equitable adjustment and modify the contract in writing. However, except for an adjustment based on defective specifications, no adjustment for any change under paragraph (b) of this clause shall

be made for any costs incurred more than 20 days before the Contractor gives written notice as required. In the case of defective specifications for which the Government is responsible, the equitable adjustment shall include any increased cost reasonably incurred by the Contractor in attempting to comply with the defective specifications.

(e) The Contractor must assert its right to an adjustment under this clause within 30 days after

(1) receipt of a written change order under paragraph (a) of this clause or (2) the furnishing of a written notice under paragraph (b) of this clause, by submitting to the Contracting Officer a written statement describing the general nature and amount of the proposal, unless this period is extended by the Government. The statement of proposal for adjustment may be included in the notice under paragraph (b) above.

(f) No proposal by the Contractor for an equitable adjustment shall be allowed if asserted after final payment under this contract.

(End of clause)

52.252-2 CLAUSES INCORPORATED BY REFERENCE (FEB 1998)

This contract incorporates one or more clauses by reference, with the same force and effect as if they were given in full text. Upon request, the Contracting Officer will make their full text available. Also, the full text of a clause may be accessed electronically at this/these address(es):

http://farsite.hill.af.mil/

http://acquisition.gov/comp/far/index.html

(End of clause)

52.252-6 AUTHORIZED DEVIATIONS IN CLAUSES (APR 1984)

(a) The use in this solicitation or contract of any Federal Acquisition Regulation (48 CFR Chapter 1) clause with an authorized deviation is indicated by the addition of "(DEVIATION)" after the date of the clause.

(b) The use in this solicitation or contract of any DEFENSE FAR SUPPLEMENT (48 CFR CHAPTER 2) clause with an authorized deviation is indicated by the addition of "(DEVIATION)" after the name of the regulation.

(End of clause)

252.225-7024 REQUIREMENT FOR PRODUCTS OR SERVICES FROM IRAQ OR AFGHANISTAN (APR 2010)

(a) Definitions. As used in this clause--

(1) Product from Iraq or Afghanistan means a product that is mined, produced, or manufactured in Iraq or Afghanistan.

(2) Service from Iraq or Afghanistan means a service (including construction) that is performed in Iraq or Afghanistan predominantly by citizens or permanent resident aliens of Iraq or Afghanistan.

(b) The Contractor shall provide only products from Iraq or Afghanistan or services from Iraq or Afghanistan under this contract, unless, in its offer, it specified that it would provide products or services other than products from Iraq or Afghanistan or services from Iraq or Afghanistan.

(End of clause)

252.225-7039 CONTRACTORS PERFORMING PRIVATE SECURITY FUNCTIONS (AUG 2011)

(a) Definition.

Private security functions means activities engaged in by a contractor, including--

(i) Guarding of personnel, facilities, designated sites, or property of a Federal agency, the contractor or subcontractor, or a third party; or

(ii) Any other activity for which personnel are required to carry weapons in the performance of their duties.

(b) Requirements. The Contractor is required to--

(1) Ensure that all employees of the Contractor who are responsible for performing private security functions under this contract comply with any orders, directives, and instructions to Contractors performing private security functions that are identified in the contract for--

(i) Registering, processing, accounting for, managing, overseeing, and keeping appropriate records of personnel performing private security functions. This includes ensuring the issuance, maintenance, and return of Personal Identity Verification credentials in accordance with FAR 52.204-19, Personnel Identity Verification of Contractor Personnel, and DoD procedures, including revocation of any physical and/or logistical access (as defined by Homeland Security Presidential Directive (HSPD-12)) granted to such personnel;

(ii) Authorizing and accounting for weapons to be carried by or available to be used by personnel performing private security functions;

(A) All weapons must be registered in the Synchronized Predeployment Operational Tracker (SPOT) materiel tracking system.

(B) In addition, all weapons that are Government-furnished property must be assigned a unique identifier in accordance with the clauses at DFARS 252.211-7003, Item Identification and Valuation, and DFARS 252.245.7001, Tagging, Labeling, and Marking of Government-Furnished Property, and physically marked in accordance with MIL-STD 130 (current version) and DoD directives and instructions. The items must be registered in the DoD Item Unique Identification (IUID) Registry (https://www.bpn.gov/iuid/);

(iii) Registering and identifying armored vehicles, helicopters, and other military vehicles operated by Contractors performing private security functions;

(A) All armored vehicles, helicopters, and other military vehicles must be registered in SPOT.

(B) In addition, all armored vehicles, helicopters, and other military vehicles that are Government-furnished property must be assigned a unique identifier in accordance with the clauses at DFARS 252.211-7003 and DFARS 252.245.7001 and physically marked in accordance with MIL-STD 130 (current version) and DoD directives and instructions. The items must be registered in the DoD IUID Registry (https://www.bpn.gov/iuid/); and

(iv) Reporting incidents in which--

(A) A weapon is discharged by personnel performing private security functions;

(B) Personnel performing private security functions are attacked, killed, or injured;

(C) Persons are killed or injured or property is destroyed as a result of conduct by contractor personnel;

(D) A weapon is discharged against personnel performing private security functions or personnel performing such functions believe a weapon was so discharged; or

(E) Active, non-lethal countermeasures (other than the discharge of a weapon) are employed by personnel performing private security functions in response to a perceived immediate threat;

(2) Ensure that all employees of the Contractor who are responsible for personnel performing private security functions under this contract are briefed on and understand their obligation to comply with--

(i) Qualification, training, screening (including, if applicable, thorough background checks), and security requirements established by DoDI 3020.50, Private Security Contractors Operating in Areas of Contingency Operations, Combat Operations, or Other Significant Operations, at http://www.dtic.mil/whs/directives/corres/pdf;

(ii) Applicable laws and regulations of the United States and the host country and applicable treaties and international agreements regarding performance of private security functions;

(iii) Orders, directives, and instructions issued by the applicable commander of a combatant command relating to weapons, equipment, force protection, security, health, safety, or relations and interaction with locals; and

(iv) Rules on the use of force issued by the applicable commander of a combatant command for personnel performing private security functions; and

(3) Cooperate with any Government-authorized investigation by providing access to employees performing private security functions and relevant information in the possession of the Contractor regarding the incident concerned.

(c) Remedies. In addition to other remedies available to the Government--

(1) The Contracting Officer may direct the Contractor, at its own expense, to remove and replace any Contractor personnel who fail to comply with or violate applicable requirements of this contract. Such action may be taken at the Government's discretion without prejudice to its rights under any other provision of this contract, including termination for default. Required Contractor actions include--

(i) Ensuring the return of personal identity verification credentials;

(ii) Ensuring the return of other equipment issued to the employee under the contract; and

(iii) Revocation of any physical and/or logistical access granted to such personnel;

(2) The Contractor's failure to comply with the requirements of this clause will be included in appropriate databases of past performance and may be considered in any responsibility determination or evaluation of past performance;

(3) If this is an award-fee contract, the Contractor's failure to comply with the requirements of this clause shall be considered in the evaluation of the Contractor's performance during the relevant evaluation period, and the Contracting Officer may treat such failure to comply as a basis for reducing or denying award fees for such period or for recovering all or part of award fees previously paid for such period; and

(4) This contract may be terminated for default if the Contractor fails to comply with the requirements of paragraph (b) of this clause or, if directed by the Contracting Officer, fails to remove or replace, at its own expense, any of its personnel who violate the requirements of paragraph (b) of this clause.

(d) Rule of construction. The duty of the Contractor to comply with the requirements of this clause shall not be reduced or diminished by the failure of a higher- or lower-tier Contractor to comply with the clause requirements or by a failure of the contracting activity to provide required oversight.

(e) Subcontracts. The Contractor shall include the substance of this clause, including this paragraph (e), in all subcontracts that will be performed in areas of contingency operations, complex contingency operations, or other military operations or exercises designated by the Combatant Commander.

(End of clause)

252.225-7043 ANTITERRORISM/FORCE PROTECTION POLICY FOR DEFENSE CONTRACTORS OUTSIDE THE UNITED STATES (MAR 2006)

(a) Definition. United States, as used in this clause, means, the 50 States, the District of Columbia, and outlying areas.

(b) Except as provided in paragraph (c) of this clause, the Contractor and its subcontractors, if performing or traveling outside the United States under this contract, shall--

(1) Affiliate with the Overseas Security Advisory Council, if the Contractor or subcontractor is a U.S. entity;

(2) Ensure that Contractor and subcontractor personnel who are U.S. nationals and are in-country on a non-transitory basis, register with the U.S. Embassy, and that Contractor and subcontractor personnel who are third country nationals comply with any security related requirements of the Embassy of their nationality;

(3) Provide, to Contractor and subcontractor personnel, antiterrorism/force protection awareness information commensurate with that which the Department of Defense (DoD) provides to its military and civilian personnel and their families, to the extent such information can be made available prior to travel outside the United States; and

(4) Obtain and comply with the most current antiterrorism/force protection guidance for Contractor and subcontractor personnel.

(c) The requirements of this clause do not apply to any subcontractor that is--

(1) A foreign government;

(2) A representative of a foreign government; or

(3) A foreign corporation wholly owned by a foreign government.

(d) Information and guidance pertaining to DoD antiterrorism/force protection can be obtained from COMBINED SECURITY TRANSITION COMMAND, AFGHANISTAN (CSTC-A) CAMP EGGERS, KABUL, AFGHANISTAN.

(End of clause)

252.225-7995 CONTRACTOR PERSONNEL PERFORMING IN THE UNITED STATES CENTRAL COMMAND AREA OF RESPONSIBILITY (DEVIATION 2011-O0004) (APR 2011)

(a) *Definition.* As used in this clause—

"Chief of mission" means the principal officer in charge of a diplomatic mission of the United States or of a United States office abroad which is designated by the Secretary of State as diplomatic in nature, including any individual assigned under section 502(c) of the Foreign Service Act of 1980 (Public Law 96-465) to be temporarily in charge of such a mission or office.

(b) *General.* (1) This clause applies when contractor personnel are required to perform in the United States Central Command (USCENTCOM) Area of Responsibility (AOR) and are not covered by the clause at DFARS 252.225-7040, Contractor Personnel Authorized to Accompany U.S. Armed Forces Deployed Outside the United States.

(2) Contract performance may require work in dangerous or austere conditions. Except as otherwise provided in the contract, the Contractor accepts the risks associated with required contract performance in such operations.

(3) Contractor personnel are civilians.

(i) Except as provided in paragraph (b)(3)(ii) of this clause, and in accordance with paragraph (i)(3) of this clause, contractor personnel are only authorized to use deadly force in self defense.

(ii) Contractor personnel performing security functions are also authorized to use deadly force when use of such force reasonably appears necessary to execute their security mission to protect assets/persons, consistent with the terms and conditions contained in the contract or with their job description and terms of employment.

(4) Service performed by contractor personnel subject to this clause is not active duty or service under 38 U.S.C. 106.

(c) *Support.* Unless specified elsewhere in the contract, the Contractor is responsible for all logistical and security support required for contractor personnel engaged in this contract.

(d) *Compliance with laws and regulations.* The Contractor shall comply with, and shall ensure that its personnel in the USCENTCOM AOR are familiar with and comply with, all applicable—

(1) United States, host country, and third country national laws;

(2) Treaties and international agreements;

(3) United States regulations, directives, instructions, policies, and procedures; and

(4) Force protection, security, health, or safety orders, directives, and instructions issued by the USCENTCOM Commander; however, only the Contracting Officer is authorized to modify the terms and conditions of the contract.

(e) *Preliminary personnel requirements*. (1) Specific requirements for paragraphs (e)(2)(i) through (e)(2)(vi) of this clause will be set forth in the statement of work or elsewhere in the contract.

(2) Before contractor personnel depart from the United States or a third country, and before contractor personnel residing in the host country begin contract performance in the USCENTCOM AOR, the Contractor shall ensure the following:

(i) All required security and background checks are complete and acceptable.

(ii) All personnel are medically and physically fit and have received all required vaccinations.

(iii) All personnel have all necessary passports, visas, entry permits, and other documents required for contractor personnel to enter and exit the foreign country, including those required for in-transit countries.

(iv) All personnel have received theater clearance, if required by the Combatant Commander.

(v) All personnel have received personal security training. The training must, at a minimum—

(A) Cover safety and security issues facing employees overseas;

(B) Identify safety and security contingency planning activities; and

(C) Identify ways to utilize safety and security personnel and other resources appropriately.

(vi) All personnel who are U.S. citizens are registered with the U.S. Embassy or Consulate with jurisdiction over the area of operations on-line at http://www.travel.state.gov.

(3) The Contractor shall notify all personnel who are not a local national or ordinarily resident in the host country that—

(i) Such employees, and dependents residing with such employees, who engage in conduct outside the United States that would constitute an offense punishable by imprisonment for more than one year if the conduct had been engaged in within the special maritime and territorial jurisdiction of the United States, may potentially be subject to the criminal jurisdiction of the United States (see the Military Extraterritorial Jurisdiction Act of 2000 (18 U.S.C. 3261 *et seq.*);

(ii) Pursuant to the War Crimes Act, 18 U.S.C. 2441, Federal criminal jurisdiction also extends to conduct that is determined to constitute a violation of the law of war when committed by a civilian national of the United States;

(iii) Other laws may provide for prosecution of U.S. nationals who commit offenses on the premises of United States diplomatic, consular, military, or other Government missions outside the United States (18 U.S.C. 7(9)).

(f) *Processing and departure points*. The Contractor shall require its personnel who are arriving from outside the area of performance to perform in the USCENTCOM AOR to—

(1) Process through the departure center designated in the contract or complete another process as directed by the Contracting Officer;

(2) Use a specific point of departure and transportation mode as directed by the Contracting Officer; and

(3) Process through a reception center as designated by the Contracting Officer upon arrival at the place of performance.

(g) *Registration of Contractor personnel and private security contractor equipment.*

(1) The Contractor is required to register in the automated web-based Synchronized Predeployment and Operational Tracker (SPOT) following the procedures in paragraph (g)(4) of this clause.

(2) Prior to deployment of contractor employees, or, if already in the USCENTCOM AOR, upon becoming an employee under this contract, the Contractor shall enter into SPOT, and maintain current data, including actual arrival date and departure date, for all contractor personnel, including U.S. citizens, U.S. legal aliens, third-country nationals, and local national contractor personnel, who are performing this contract in the USCENTCOM AOR as follows:

(i) In all circumstances, this includes any personnel performing private security functions.

(ii) For personnel other than those performing private security functions, this requirement excludes anyone—

(A) Hired under contracts valued less than $100,000;

(B) Who will be performing in the CENTCOM AOR less than 30 continuous days; or

(C) Who, while afloat, are tracked by the Diary message Reporting System

(3) Weapons, armored vehicles, helicopters, and other military vehicles used by personnel performing private security functions under this contract must be entered into SPOT, and the currency of such information must be maintained.

(4) Follow these steps to register in and use SPOT:

(i) SPOT registration requires one of the following login methods:

(A) A Common Access Card or a SPOT-approved digital certificate; or

(B) A Government-sponsored SPOT user ID and password or an Army Knowledge Online (AKO) account.

(ii) *To register in SPOT:*

(A) Contractor company administrators should register for a SPOT account at https://spot.altess.army.mil; and

(B) The customer support team must validate user need. This process may take two business days. Company supervisors will be contacted to validate Contractor company administrator account requests and determine the appropriate level of user access.

(iii) Upon approval, all users will access SPOT at https://spot.altess.army.mil/.

(iv) Refer SPOT application assistance questions to the Customer Support Team at 717-458-0747 or SPOT.helpdesk@us.army.mil. Refer to the SPOT Enterprise Suite Resource Center at http://www.resource.spot-es.net/ for additional training resources and documentation regarding registration for and use of SPOT.

(5) The Contractor shall submit aggregate contractor personnel counts at a minimum quarterly or as directed by the Contracting Officer by category (i.e. U.S. third country national or local national) of those contractor personnel who are on contracts valued greater than $100,000, but performing less that 30 days in the AOR (e.g. day laborers).

(6) The Contractor shall ensure that all contractor personnel in the database have a current DD Form 93, Record of Emergency Data Card, on file with both the Contractor and the designated Government official. The Contracting Officer will inform the Contractor of the Government official designated to receive the data card.

(h) *Contractor personnel*. The Contracting Officer may direct the Contractor, at its own expense, to remove and replace any contractor personnel who fail to comply with or violate applicable requirements of this contract. Such action may be taken at the Government's discretion without prejudice to its rights under any other provision of this contract, including termination for default or cause.

(i) *Weapons.*

(1) If the Contracting Officer, subject to the approval of the USCENTCOM Commander, authorizes the carrying of weapons—

(i) The Contracting Officer may authorize an approved Contractor to issue Contractor-owned weapons and ammunition to specified employees; or

(ii) The (N/A – USACE DOES NOT ISSUE WEAPONS TO CONTRACTORS) may issue Government-furnished weapons and ammunition to the Contractor for issuance to specified contractor employees.

(2) The Contractor shall provide to the Contracting Officer a specific list of personnel for whom authorization to carry a weapon is requested.

(3) The Contractor shall ensure that its personnel who are authorized to carry weapons—

(i) Are adequately trained to carry and use them—

(A) Safely;

(B) With full understanding of, and adherence to, the rules of the use of force issued by the USCENTCOM Commander; and

(C) In compliance with applicable Department of Defense and agency policies, agreements, rules, regulations, and other applicable law;

(ii) Are not barred from possession of a firearm by 18 U.S.C. 922; and

(iii) Adhere to all guidance and orders issued by the USCENTCOM Commander regarding possession, use, safety, and accountability of weapons and ammunition.

(4) Upon revocation by the Contracting Officer of the Contractor's authorization to possess weapons, the Contractor shall ensure that all Government-furnished weapons and unexpended ammunition are returned as directed by the Contracting Officer.

(5) Whether or not weapons are Government-furnished, all liability for the use of any weapon by contractor personnel rests solely with the Contractor and the Contractor employee using such weapon.

(j) *Vehicle or equipment licenses*. Contractor personnel shall possess the required licenses to operate all vehicles or equipment necessary to perform the contract in the area of performance.

(k) *Military clothing and protective equipment.*

(1) Contractor personnel are prohibited from wearing military clothing unless specifically authorized by the USCENTCOM Commander. If authorized to wear military clothing, contractor personnel must wear distinctive patches, arm bands, nametags, or headgear, in order to be distinguishable from military personnel, consistent with force protection measures.

(2) Contractor personnel may wear specific items required for safety and security, such as ballistic, nuclear, biological, or chemical protective equipment.

(l) *Evacuation.*

(1) If the Chief of Mission or USCENTCOM Commander orders a mandatory evacuation of some or all personnel, the Government will provide to United States and designated third country national contractor personnel the level of assistance provided to private United States citizens.

(2) In the event of a non-mandatory evacuation order, the Contractor shall maintain personnel on location sufficient to meet contractual obligations unless instructed to evacuate by the Contracting Officer.

(m) *Notification and return of personal effects*.

(1) The Contractor shall be responsible for notification of the contractor personnel designated next of kin, and notification as soon as possible to the U.S. Consul responsible for the area in which the event occurred, if the individual—

(i) Dies;

(ii) Requires evacuation due to an injury; or

(iii) Is isolated, missing, detained, captured, or abducted.

(2) The Contractor shall also be responsible for the return of all personal effects of deceased or missing contractor personnel, if appropriate, to next of kin.

(n) *Mortuary affairs*. Mortuary affairs for contractor personnel who die in the area of performance will be handled in accordance with DoD Directive 1300.22, Mortuary Affairs Policy.

(o) *Changes*. In addition to the changes otherwise authorized by the Changes clause of this contract, the Contracting Officer may, at any time, by written order identified as a change order, make changes in place of performance or Government-furnished facilities, equipment, material, services, or site. Any change order issued in accordance with this paragraph shall be subject to the provisions of the Changes clause of this contract.

(p) *Subcontracts*. The Contractor shall incorporate the substance of this clause, including this paragraph (p), in all subcontracts that require subcontractor personnel to perform in the USCENTCOM AOR.

(End of clause)

252.225-7997 ADDITIONAL REQUIREMENTS AND RESPONSIBILITIES RELATING TO ALLEGED CRIMES BY OR AGAINST CONTRACTOR PERSONNEL IN IRAQ AND AFGHANISTAN (DEVIATION 2010-O0014)(AUGUST 2010)

(a) The Contractor shall report to the appropriate investigative authorities, identified in paragraph (c) below, any alleged offenses under—

(1) The Uniform Code of Military Justice (chapter 47 of title 10, United States code) (applicable to contractors serving with or accompanying an armed force in the field during a declared war or a contingency operation); or

(2) The Military Extraterritorial Jurisdiction Act (chapter 212 of title 18, United States Code).

(b) The Contractor shall provide to all contractor personnel who will perform work on a contract in Iraq or Afghanistan, before beginning such work, information on the following:

(1) How and where to report an alleged crime described in paragraph (a) of this clause.

(2) Where to seek victim and witness protection and assistance available to contractor personnel in connection with an alleged offense described in paragraph (a) of this clause.

(c) The appropriate investigative authorities to which suspected crimes shall be

reported include the following officials--

(i) US Army Criminal Investigative Division at http://www.cid.army.mil/reportacrime.html;

(ii) Air Force Office of Special Investigations at
http://www.osi.andrews.af.mil/library/factsheets/factsheet.asp?id=14522;

(iii) Navy Criminal Investigative Service at http://www.ncis.navy.mil/Pages/publicdefault.aspx;
or

(iv) To the command of any supported military element or the command of any base.

(d) Personnel seeking whistleblower protection from reprisals for reporting criminal
acts shall seek guidance through the DoD Inspector General hotline at (800) 424-9098
or www.dodig.mil/HOTLINE/index.html. Personnel seeking other forms of victim or witness
protections should contact the nearest military law enforcement office.

(End of clause)

252.232-7003 ELECTRONIC SUBMISSION OF PAYMENT REQUESTS AND RECEIVING REPORTS
(MAR 2008)

(a) Definitions. As used in this clause--

(1) Contract financing payment and invoice payment have the meanings given in section 32.001 of the Federal Acquisition Regulation.

(2) Electronic form means any automated system that transmits information electronically from the initiating system to all affected systems. Facsimile, e-mail, and scanned documents are not acceptable electronic forms for submission of payment requests. However, scanned documents are acceptable when they are part of a submission of a payment request made using Wide Area WorkFlow (WAWF) or another electronic form authorized by the Contracting Officer.

(3) Payment request means any request for contract financing payment or invoice payment submitted by the Contractor under this contract.

(b) Except as provided in paragraph (c) of this clause, the Contractor shall submit payment requests and receiving reports using WAWF, in one of the following electronic formats that WAWF accepts: Electronic Data Interchange, Secure File Transfer Protocol, or World Wide Web input. Information regarding WAWF is available on the Internet at https://wawf.eb.mil/.

(c) The Contractor may submit a payment request and receiving report using other than WAWF only when--

(1) The Contracting Officer authorizes use of another electronic form. With such an authorization, the Contractor and the Contracting Officer shall agree to a plan, which shall include a timeline, specifying when the Contractor will transfer to WAWF;

(2) DoD is unable to receive a payment request or provide acceptance in electronic form;

(3) The Contracting Officer administering the contract for payment has determined, in writing, that electronic submission would be unduly burdensome to the Contractor. In such cases, the Contractor shall include a copy of the Contracting Officer's determination with each request for payment; or

(4) DoD makes payment for commercial transportation services provided under a Government rate tender or a contract for transportation services using a DoD-approved electronic third party payment system or other exempted vendor payment/invoicing system (e.g., PowerTrack, Transportation Financial Management System, and Cargo and Billing System).

(d) The Contractor shall submit any non-electronic payment requests using the method or methods specified in Section G of the contract.

(e) In addition to the requirements of this clause, the Contractor shall meet the requirements of the appropriate payment clauses in this contract when submitting payments requests.

(End of clause)

252.236-7001 CONTRACT DRAWINGS AND SPECIFICATIONS (AUG 2000)

(a) The Government will provide to the Contractor, without charge, one set of contract drawings and specifications, except publications incorporated into the technical provisions by reference, in electronic or paper media as chosen by the Contracting Officer.

(b) The Contractor shall--

(1) Check all drawings furnished immediately upon receipt;

(2) Compare all drawings and verify the figures before laying out the work;

(3) Promptly notify the Contracting Officer of any discrepancies;

(4) Be responsible for any errors that might have been avoided by complying with this paragraph (b); and

(5) Reproduce and print contract drawings and specifications as needed.

(c) In general--

(1) Large-scale drawings shall govern small-scale drawings; and

(2) The Contractor shall follow figures marked on drawings in preference to scale measurements.

(d) Omissions from the drawings or specifications or the misdescription of details of work that are manifestly necessary to carry out the intent of the drawings and specifications, or that are customarily performed, shall not relieve the Contractor from performing such omitted or misdescribed details of the work. The Contractor shall perform such details as if fully and correctly set forth and described in the drawings and specifications.

(e) The work shall conform to the specifications and the contract drawings identified on the following index of drawings:

Title	File	Drawing No.
DIVISION 00	PROCUREMENT AND CONTRACTING REQUIREMENTS	
00 31 10	METRIC MEASUREMENTS	
DIVISION 01	GENERAL REQUIREMENTS	

01 10 00.12 10	SCOPE OF WORK
01 31 13.12 10	SPECIAL CLAUSES
01 32 17.00 20	NETWORK ANALYSIS SCHEDULES (NAS)
01 33 00.12 10	SUBMITTAL PROCEDURES FOR DESIGN-BUILD PROJECT
01 33 00	SUBMITTAL PROCEDURES
01 35 26	GOVERNMENTAL SAFETY REQUIREMENTS
01 42 00	SOURCES FOR REFERENCE PUBLICATIONS
01 45 02.00 10	QUALITY CONTROL SYSTEM (QCS)
01 45 04.00 10	CONTRACTOR QUALITY CONTROL
01 62 35	RECYCLED / RECOVERED MATERIALS
01 80 00.12 10	TECHNICAL REQUIREMENTS
DIVISION 31	EARTHWORK
31 00 00	EARTHWORK
DIVISION 32	EXTERIOR IMPROVEMENTS
32 11 23	GRADED-CRUSHED AGGREGATE BASE COURSE
32 12 10	BITUMINOUS TACK AND PRIME COATS
32 12 15	HOT-MIX ASPHALT (HMA) FOR AIRFIELDS
32 13 11	CONCRETE PAVEMENT FOR AIRFIELDS AND OTHER HEAVY-DUTY PAVEMENTS
32 13 73	COMPRESSIONJOINT SEALS FOR CONCRETE PAVEMENTS
32 15 00	AGGREGATE SURFACE COURSE
32 17 24.00 10	PAVEMENT MARKINGS
DIVISION 34	TRANSPORTATION
34 73 13	MOORING AND GROUNDING POINTS FOR AIRCRAFT
AF 1139	SITE DESIGN/DRAWINGS

(End of clause)

252.246-7004 SAFETY OF FACILITIES, INFRASTRUCTURE, AND EQUIPMENT FOR MILITARY OPERATIONS (OCT 2010)

(a) Definition. Discipline Working Group, as used in this clause, means representatives from the DoD Components, as defined in MIL-STD-3007F, who are responsible for the unification and maintenance of the Unified Facilities Criteria (UFC) documents for a particular discipline area.

(b) The Contractor shall ensure, consistent with the requirements of the applicable inspection clause in this contract, that the facilities, infrastructure, and equipment acquired, constructed, installed, repaired, maintained, or operated under this contract comply with Unified Facilities Criteria (UFC) 1-200-01 for--

(1) Fire protection;

(2) Structural integrity;

(3) Electrical systems;

(4) Plumbing;

(5) Water treatment;

(6) Waste disposal; and

(7) Telecommunications networks.

(c) The Contractor may apply a standard equivalent to or more stringent than UFC 1-200-01 upon a written determination of the acceptability of the standard by the Contracting Officer with the concurrence of the relevant Discipline Working Group.

(End of clause)

Section 00800 - Special Contract Requirements

CLAUSES INCORPORATED BY REFERENCE

52.211-13	Time Extensions	SEP 2000
52.236-5	Material and Workmanship	APR 1984
52.242-14	Suspension of Work	APR 1984
52.246-12	Inspection of Construction	AUG 1996

CLAUSES INCORPORATED BY FULL TEXT

52.211-10 COMMENCEMENT, PROSECUTION, AND COMPLETION OF WORK (APR 1984)

The Contractor shall be required to (a) commence work under this contract within TEN (10) calendar days after the date the Contractor receives the notice to proceed, (b) prosecute the work diligently, and (c) complete the entire work ready for use not later than 210 CALENDAR DAYS AFTER ISSUANCE OF NOTICE TO PROCEED. * The time stated for completion shall include final cleanup of the premises.

(End of clause)

52.211-12 LIQUIDATED DAMAGES--CONSTRUCTION (SEP 2000)

(a) If the Contractor fails to complete the work within the time specified in the contract, the Contractor shall pay liquidated damages to the Government in the amount of $1,580.00 for each calendar day of delay until the work is completed or accepted.

(b) If the Government terminates the Contractor's right to proceed, liquidated damages will continue to accrue until the work is completed. These liquidated damages are in addition to excess costs of repurchase under the Termination clause.

(End of clause)

252.236-7004 PAYMENT FOR MOBILIZATION AND DEMOBILIZATION (DEC 1991)

(a) The Government will pay all costs for the mobilization and demobilization of all of the Contractor's plant and equipment at the contract lump sum price for this item.

(1) SIXTY (60) percent of the lump sum price upon completion of the contractor's mobilization at the work site.

(2) The remaining FORTY (40) percent upon completion of demobilization.

(b) The Contracting Officer may require the Contractor to furnish cost data to justify this portion of the bid if the Contracting Officer believes that the percentages in paragraphs (a) (1) and (2) of this clause do not bear a reasonable relation to the cost of the work in this contract.

(1) Failure to justify such price to the satisfaction of the Contracting Officer will result in payment, as determined by the Contracting Officer, of --

(i) Actual mobilization costs at completion of mobilization;

(ii) Actual demobilization costs at completion of demobilization; and

(iii) The remainder of this item in the final payment under this contract.

(2) The Contracting Officer's determination of the actual costs in paragraph (b)(1) of this clause is not subject to appeal.

WORKERS COMPENSATION INSURANCE (DEFENSE BASE ACT) (APRIL 2011)

(a) This Special Contract Requirement supplements FAR Clause 52.228-3 Workers' Compensation Insurance (Defense Base Act).

(b) The contractor agrees to procure Defense Base Act (DBA) insurance pursuant to the terms of the contract between the U.S. Army Corps of Engineers (USACE) and **CNA Insurance** unless the contractor has a DBA self-insurance program approved by the Department of Labor. Proof of this self-insurance shall be provided to the Contracting Officer. The contractor shall submit proof of a valid DBA Insurance policy with CNA Insurance for the Prime and their Subcontractor's at every tier prior to performance of the contract. The current rates under the USACE, C3 and 408th CSB contract are as follows:

Service	$3.50	per $100 of employee remuneration
Construction	$4.25	per $100 of employee remuneration
Security	$10.00	per $100 of employee remuneration
Aviation	$17.00	per $100 of employee remuneration

(c) **Labor Category/Job Classification Definitions:**

SERVICE: White-collar" workers providing IT, engineering/consulting services, and restaurant services. Security consultants are included in this category if they are only providing risk assessment services and no form of armed protection.

CONSTRUCTION: "Blue-collar" workers providing services such as carpentry, electrical, plumbing, mechanical, concrete/asphalt, de-mining, roofing, landscaping, janitorial, trash removal, Port-a-John/septic cleaning, pest exterminating, auto repair/dismantling, drivers/couriers, and heavy equipment operation and maintenance. Construction site supervisors/managers and life support service providers are included in this category as well as all Unskilled and Manual Labor Day Laborers.

SECURITY: Personal Security Detail (PSD) and Static or Convoy Guarding of property or personnel.

AVIATION: Pilot and Crew of any aircraft excluding ground personnel who provide maintenance or services and stay on the ground.

NOTE: More than one rate may be applicable as more than one type of labor may be applicable for a particular contract.

(d) The contractor agrees to insert a Special Contract Requirement substantially the same as this one in all subcontracts (at every tier) to which DBA is applicable. Every subcontractor shall procure its own DBA Insurance coverage directly from CNA Insurance Co.

(e) Should the rates for DBA insurance coverage increase or decrease during the performance of this contract, USACE shall modify the contract accordingly. However, the revised rates will not be applicable until the Contractor's or Subcontractor's DBA Insurance policy is due to be renewed.

(f) CNA's Broker (Rutherfoord International) shall provide proof of confirmation of coverage within 3 working days of receipt of a complete insurance application. This confirmation should be used by the Contracting Officer to issue notice to proceed with performance.

(g) Premiums will be reimbursed only if coverage is purchased through the USACE mandatory requirements DBA contract administered by CNA Insurance and their Managing Broker, Rutherfoord International.

(h) Claims Reporting - The Contractor shall make timely Defense Base Act insurance claims on behalf of each employee who is injured or killed in the course of their employment under this contract, and shall ensure that similar language is in each Subcontractor's contract. The Contractor's Safety Officer shall, in addition to any other duties required to be performed under the contract, perform the following:

(i) Make timely Defense Base Act insurance claims on behalf of each employee who is injured or killed in the course of their employment under this contract; and

(ii) Make monthly written reports to the Contracting Officer, Administrative Contracting Officer, and the District/Center Safety and Occupational Health Manager, providing the names of each such injured or deceased employee, the circumstances surrounding each injury or death, the dates of each injury or death, the date the insurance claim was made on behalf of each employee, and the current status of each claim.

The District/Center Safety and Occupational Health Manager POC is:

Susan R. Fox, Email: Susan.R.Fox@usace.army.mil

(i) The Insurance carrier/Broker will conduct periodic audits of actual contractor payroll amounts. When a return is due for over-payment of premium on a specific audit, such returned premium shall be returned to the U.S. Department of Treasury.

(j) Failure to comply and purchase Defense Base Act (DBA) Insurance in accordance with FAR Clauses 52.228-3 Workers' Compensation Insurance (Defense Base Act), from the U.S. Army Corps of Engineers mandatory Insurance Carrier/Broker (CNA Insurance/Rutherfoord International) for the Prime and all of the Subcontractors at every tier, shall be considered a material breach and could cause your contract to be terminated for default/cause.

(End of clause)

TRAVEL WARNINGS

The contractor shall provide all personnel working under this contract, and shall require subcontractors to provide their personnel, with a written notification advising such personnel to be aware of US State Department Travel Warnings with respect to Afghanistan, available at http://travel.state.gov, in the event they wish to consider bringing their dependants into Afghanistan. A copy of the notice *shall be furnished to the contracting officer upon award of the contract*, along with a certification by an authorized company representative attesting to the provision of the notification to contractor personnel. At no time, subject to the written approval of the contracting officer, may the contractor allow such dependants, or any other unauthorized individuals, to be present on the project site grounds, whether in transit or otherwise.

(End of clause)

CRIMMINAL JURISDICTION
APPLICATION OF US CRIMINAL JURISDICTION

Reference DODI 5525.11. The contractor is directed to provide all of its personnel working under this contract, and to require all of its subcontractors to provide their personnel, with written notification that - with the exception of nationals of Afghanistan and those ordinarily resident in Afghanistan - contractor and subcontractor personnel, and

the dependents of contractor and subcontractor personnel who are residing with such personnel, may be subject to US criminal jurisdiction as provided for in the Military Extraterritorial Jurisdiction Act, 18 USC 3261-3267; see Section 3267(1)(A)(iii)(I) and (2)(A)(iii). A copy of the notice *shall be furnished to the contracting officer upon award of the contract*, along with a certification by an authorized company representative attesting to the provision of the notification to contractor personnel.

(End of clause)

952.222-0001 PROHIBITION AGAINST HUMAN TRAFFICKING, INHUMANE LIVING CONDITIONS, AND WITHHOLDING OF EMPLOYEE PASSPORTS (AUG 2011)

(a) All contractors ("contractors" refers to both prime contractors and all subcontractors at all tiers) are reminded of the prohibition contained in Title 18, United States Code, Section 1592, against knowingly destroying, concealing, removing, confiscating, or possessing any actual or purported passport or other immigration document, or any other actual or purported government identification document, of another person, to prevent or restrict or to attempt to prevent or restrict, without lawful authority, the person's liberty to move or travel, in order to maintain the labor or services of that person.

(b) Contractors are also required to comply with the following provisions:

(1) Contractors shall only hold employee passports and other identification documents discussed above for the shortest period of time reasonable for administrative processing purposes.
(2) Contractors shall provide all employees with a signed copy of their employment contract, in English as well as the employee's native language, that defines the terms of their employment/compensation.
(3) Contractors shall not utilize unlicensed recruiting firms or firms that charge illegal recruiting fees.
(4) Contractors shall be required to provide adequate living conditions (sanitation, health, safety, living space) for their employees. Fifty square feet is the minimum acceptable square footage of personal living space per employee. Upon contractor's written request, Contracting Officers may grant a waiver in writing in cases where the existing square footage is within 20% of the minimum, and the overall conditions are determined by the Contracting Officer to be acceptable. A copy of the waiver approval shall be maintained at the respective life support area.
(5) Contractors shall incorporate checks of life support areas to ensure compliance with the requirements of this Trafficking in Persons Prohibition into their Quality Control program, which will be reviewed within the Government's Quality Assurance process.
(6) Contractors shall comply with International and Host Nation laws regarding transit/exit/entry procedures and the requirements for visas and work permits.

(c) Contractors have an affirmative duty to advise the Contracting Officer if they learn of their employees violating the human trafficking and inhumane living conditions provisions contained herein. Contractors are advised that Contracting Officers and/or their representatives will conduct random checks to ensure contractors and subcontractors at all tiers are adhering to the law on human trafficking, humane living conditions and withholding of passports.

(d) The contractor agrees to incorporate the substance of this clause, including this paragraph, in all subcontracts under his contract.

(End of Clause)

952.223-0001 REPORTING KIDNAPPINGS, SERIOUS INJURIES AND DEATHS (JUL 2010)

Contractors shall notify the Contracting Officer, as soon as practicable, whenever employee kidnappings, serious injuries or deaths occur.

Report the following information:
Contract Number
Contract Description & Location
Company Name
Reporting party:
Name
Phone number
e-mail address
Victim:
Name
Gender (Male/Female)
Age
Nationality
Country of permanent residence
Incident:
Description
Location
Date and time
Other Pertinent Information

(End of Clause)

952.225-0001 ARMING REQUIREMENTS AND PROCEDURES FOR PERSONAL SECURITY SERVICES CONTRACTORS AND FOR REQUESTS FOR PERSONAL PROTECTION (AUG 2011)

(a) **General.** Contractor and its subcontractors at all tiers that require arming under this contract agree to obey all laws, regulations, orders, and directives applicable to the use of private security personnel in Iraq and Afghanistan, including U.S. CENTCOM, United States Forces - Iraq (USF-I) and United States Forces - Afghanistan (USFOR-A) Commander orders, instructions and directives. Contractors will ensure that all employees, including employees at any tier of subcontracting relationships, armed under the provisions of this contract, comply with the contents of this clause and with the requirements set forth in the following:

(1) DODI 3020.50, *Private Security Contractors (PSCs) Operating in Contingency Operations;*
(2) DODI 3020.41, *Program Management for Acquisition and Operational Contract Support in Contingency Operations*;
(3) DFARS 252.225-7040, *Contractor Personnel Supporting a Force Deployed Outside the United States*;
(4) Class Deviation 2011-O0004, Contractor Personnel in the United States Central Command Area of Responsibility
(5) USFOR-A, FRAGO 11-128, Outlines Management of Armed Contractors and Private Security Companies Operating in the Combined Joint Operations Area - Afghanistan (CJOA-A)
(6) USF-I OPORD 11-01, Annex C, Appendix 20
(7) U.S. CENTCOM Policy and Delegation of Authority for Personal Protection and Contract Security Service Arming of DoD Civilian Personnel Dated 18 Jan 2011.

(b) **Required Contractor Documentation.** Contractors and their subcontractors at all tiers that require arming approval shall provide to the arming approval authority via the COR consistent documentation (signed and dated by the employee and employer as applicable) for each of their employees who will seek authorization to be armed under the contract as follows:

(1) Weapons Qualification/Familiarization. All employees must meet the weapons qualification requirements on the requested weapon(s) established by any DoD or other U.S. government agency, Law of Armed Conflict (LOAC); Rules for the Use of Force (RUF), as defined in the U.S. CENTCOM Policy, dated 23 December 2005; and distinction between the above-prescribed RUF and the Rules of Engagement (ROE), which are applicable only to military forces.
(2) Completed DD Form 2760 (or equivalent documentation) for each armed employee, indicating that the employee is not otherwise prohibited under U.S. law from possessing the required weapon or ammunition.

(3) Written acknowledgement by the individual of the fulfillment of training responsibilities and the conditions for the authorization to carry firearms. This document includes the acknowledgement of the distinctions between the ROE applicable to military forces and RUF that control the use of weapons by DoD civilians, DoD contractors and PSCs.
(4) Written acknowledgement signed by both the armed employee and by a representative of the employing company that use of weapons could subject both the individual and company to U.S. and host nation prosecution and civil liability.
(5) A copy of the contract between the contractor's company and the U.S. Government that verifies the individual's employment and addresses the need to be armed.
(6) One (1) copy of a business license from the Iraqi or Afghani Ministry of Trade or Interior.
(7) One (1) copy of a license to operate as a PSC (or a temporary operating license) from the Ministry of Interior.

(c) **Communication Plan**. The contractor will submit to the COR a communications plan that, at a minimum, sets forth the following:

(1) The contractor's method of notifying military forces and requesting assistance where hostilities arise, combat action is needed or serious incidents have been observed.
(2) How relevant threat information will be shared between contractor security personnel and U.S. military forces.
(3) How the contractor will coordinate transportation with appropriate military authorities.

(d) **Plan for Accomplishing Employee Vetting**. The contractor will submit to the COR an acceptable plan for vetting all contractor and subcontractor employees. The contractor shall, at a minimum, perform the following (which will be specifically addressed in its plan):

(1) Local Nationals: Perform Local and National Agency background checks in accordance with Host Nation Government policies and protocols.
(2) Use one or more of the following sources when conducting the background checks on Third Country Nationals: Interpol, FBI, (2) Country of Origin Criminal Records, Country of Origin U.S. Embassy Information Request, CIA records.
(3) All local nationals and third country nationals will voluntarily submit to full biometric enrollment in accordance with theater biometric policies prior to submitting arming requests. All local nationals and third country nationals will voluntarily submit to routine biometric screening in accordance with local installation policies and procedures. The contractor will immediately notify the COR, local installation Force Protection agency and the theater arming approval authority of any individuals who are revealed as potential security risks during biometric processing.
(4) The Contractor shall provide to the COR official written certification of candidate(s) suitability for employment. This certification may address multiple employees on a single certification but must clearly state each employee was vetted in accordance with the Contractor's plan for accomplishing employee vetting.

(e) **Penalties for Non-Compliance**. Failure of contractor or subcontractor employee(s) to comply with the laws, regulations, orders, and rules (including those specified herein) governing the use of force, training, arming authorization, and incident reporting requirements may result in the revocation of weapons authorization for such employee(s). Where appropriate, such failure may also result in the total revocation of weapons authorization for the contractor (or subcontractor) and sanctions under the contract, including termination.

(f) **Criminal and Civil Liability**. Arming of contractor or subcontractor employees under this contract may subject the contractor, its subcontractors, and persons employed by the same, to the civil and criminal jurisdiction of the U.S. and Host Nation. "Host Nation" refers to the nation or nations where services under this contract are performed.

(g) **Lapses in Training or Authorization**. Failure to successfully retrain an employee who has been properly authorized to be armed under this contract within twelve (12) months of the last training date will constitute a lapse in the employee's authorization to possess and carry the weapon. All unauthorized employees will immediately surrender their weapon and authorization letter to the contractor and will remain unarmed until such time as they are retrained and newly approved by the arming authority. Additionally, the arming authority's authorization letter is valid for a maximum of twelve (12) months from the date of the prior letter (unless authorization is earlier invalidated by a lapse in training).

(h) **Authorized Weapon & Ammunition Types**. Unless DCDRUSCENTCOM (or a designee) expressly provides otherwise, all arming requests and authorizations for contractor or subcontractor employees under this contract shall be limited to U.S. Government-approved weapons and ammunition. Notwithstanding Host Nation laws or regulations that would allow use of heavier weapons by contract security/PSC, all DoD security service / PSC contractors must have weapons approved by DCDRUSCENTCOM (or a designee) before use. This restriction applies to all weapons in the possession of contractor employees, even if such weapons are required for personal protection. The following weapons and ammunition are currently authorized by the U.S. Government for use in Iraq and Afghanistan:

(1) The M9, M4, M16, or equivalent (e.g. .45 CAL, AK-47).
(2) The M9 or equivalent sidearm will be the standard personal protection weapon unless other weapons are specifically requested and approved.
(3) Standard authorized weapons are selectable fire semi-automatic weapons only. All Non-U.S. and Non-standard weapons must be submitted to the theater arming authority for review and approval. Non-standard weapons are classified as any machine gun, belt- fed or crew served weapon or any weapon utilizing ammunition greater than 7.62mm X 51mm NATO. Contractors must also provide scorecards and criteria for qualification appropriate to the Non-standard weapon's caliber.
(4) U.S. government Ball ammunition is the standard approved ammunition.

(i) **Requirements for Individual Weapons Possession**. All employees of the contractor and its subcontractors at all tiers who are authorized to be armed under this contract must:

(1) Possess only those U.S. Government-approved weapons and ammunition for which they are qualified under the training requirements of section (b) and subsequently authorized to carry.
(2) Carry weapons only when on duty or at a specific post (according to their authorization).
(3) Not conceal any weapons, unless specifically authorized.
(4) Carry proof of authorization to be armed. Employees not possessing such proof will be deemed unauthorized and must surrender their weapon to their employer.
(5) IAW USCENTCOM G.O. #1, consumption of alcohol or use of any intoxicating substances which may impair judgment, medication or otherwise in Iraq or Afghanistan is prohibited. In the event of a suspension or an exception to G.O. #1, employees shall not consume any alcoholic beverage while armed or within eight (8) hours of the next work period when they will be armed. There are no circumstances under which a person will be authorized to consume any alcoholic beverage or use any judgment impairing substance when armed for personal protection.

(j) **Weapons/Equipment Restrictions and Responsibilities**. Unless otherwise provided, the U.S. Government will not provide any weapons or ammunition to contractors, their subcontractors, or any employees of the same. The Contractor will provide all weapons and ammunition to those employees that will be armed under the contract. The contractor and its subcontractors at all tiers will also provide interceptor body armor, ballistic helmets, and the Nuclear, Biological, and Chemical (NBC) protective masks to those employees that require such equipment in the performance of their duties.

(k) **Rules for the Use of Force (RUF)**. In addition to the RUF and ROE training referenced in paragraph (b), the contractor and its subcontractors at all tiers will monitor and report all activities of its armed employees that may violate the RUF and/or otherwise trigger reporting requirements as serious incidents. Prompt reporting

demonstrates a desire by the contractor and its subcontractors to minimize the impact of any violations and, therefore, will be given favorable consideration. Violations of the RUF include, though are not limited to:

(1) Taking a direct part in hostilities or combat actions, other than to exercise self-defense.
(2) Failing to cooperate with Coalition and Host Nation forces.
(3) Using deadly force, other than in self-defense where there is a reasonable belief of imminent risk of death or serious bodily harm.
(4) Failing to use a graduated force approach.
(5) Failing to treat the local civilians with humanity or respect.
(6) Detaining local civilians, other than in self-defense or as reflected in the contract terms.

(l) **Retention and Review of Records**. The Contractor and all subcontractors at all tiers shall maintain records on weapons training, LOAC, RUF and the screening of employees for at least six (6) months following the expiration (or termination) of the contract. The Contractor and its subcontractors at all tiers shall make these records available to the Contracting Officer or designated representative, at no additional cost to the government, within 72 hours of a request.

(m) **Contractor Vehicles**. Vehicles used by contractor and subcontractor personnel in the course of their security duties shall not be painted or marked to resemble U.S./Coalition or host nation military and police force vehicles.

(n) **Monthly Reporting**. The prime contractor will report monthly arming status to the Contracting Officer responsible for this contract, and any other organization designated by the Contracting Officer in accordance with theater policy and the timelines defined in the Performance Work Statement.

(End of Clause)

952.225-0002 ARMED PERSONNEL INCIDENT REPORTS (AUG 2011)

(a) All contractors and subcontractors in the United States Forces-Iraq (USF-I) or United States Forces-Afghanistan (USFOR-A) theater of operations shall comply with and shall ensure that their personnel supporting USF-I or USFOR-A forces are familiar with and comply with all applicable orders, directives, and instructions issued by the respective USF-I or USFOR-A Commanders relating to force protection and safety.

(b) **IRAQ**: Contractors shall provide an initial report of all weapons firing incidents or any other serious incidents they or their contractors are involved in to USF-I Contractor Operations Cell (CONOC) as soon as practical, but not later than 4 hours after the incident. The contractor and its subcontractors at all tiers shall submit a written report to CONOC, the Contracting Officer (KO) within 96 hours of the incident. Interim reports shall be submitted between the initial and final report, when necessary to the CONOC at usfic3conoc@iraq.centcom.mil DSN 318-435-2369, UK# 0044 203 286 9851 or 0044 203 239 5894 or Skype: USFICONOC.

(c) **AFGHANISTAN**: Contractors shall immediately report all incidents and use of weapons through their Contracting Officers Representative (CORs) who will notify the Contracting Officer. Contracting Officers are responsible to notify the SCO-A Chief of Operations and the SAR @ USFOR-A (SAR SHIFT DIRECTOR, DSN: 318-237-1761) Information should include: the name of the company, where the incident occurred, time when the incident occurred, a brief description of the events leading up to the incident, and a point of contact for the company. The SCO-A Chief of Operations in coordination with the SAR will issue guidance for further reporting requirements.

(d) Contractors shall provide first aid and request MEDEVAC of injured persons, and remain available for U.S. or Coalition response forces, based upon the situation. In the event contractor personnel are detained by U.S. or Coalition Forces, prolonged detention due to lack of proper identification can be alleviated by contractor personnel possessing on their person information that includes the contractor's name, the contract number, a contractor management POC, and the phone number of the CONOC/SAR Watch. Contractor and subcontractor personnel shall carry their Letter of Authorization (LOA) on their person at all times.

(End of Clause)

952.225-0003 FITNESS FOR DUTY AND MEDICAL/DENTAL CARE LIMITATIONS (AUG 2011)

(a) The contractor shall perform the requirements of this contract notwithstanding the fitness for duty of deployed employees, the provisions for care offered under this section, and redeployment of individuals determined to be unfit. Contractor personnel who deploy for multiple tours, for more than 12 months total must be re-evaluated for fitness to deploy. An examination will remain valid for 15 months from the date of the physical. The contractor bears the responsibility for ensuring all employees are aware of the conditions and medical treatment available at the performance location. The contractor shall include this information and requirement in all subcontracts with performance in the theater of operations.

(b) The contractor shall not deploy an individual with any of the following conditions unless approved by the appropriate CENTCOM Service Component (i.e. ARCENT, AFCENT, etc.) Surgeon: Conditions which prevent the wear of personal protective equipment, including protective mask, ballistic helmet, body armor, and chemical/biological protective garments; conditions which prohibit required theater immunizations or medications; conditions or current medical treatment or medications that contraindicate or preclude the use of chemical and biological protective's and antidotes; diabetes mellitus, Type I or II, on pharmacological therapy; symptomatic coronary artery disease, or with myocardial infarction within one year prior to deployment, or within six months of coronary artery bypass graft, coronary artery angioplasty, or stenting; morbid obesity (BMI >/= 40%); dysrhythmias or arrhythmias, either symptomatic or requiring medical or electrophysiological control; uncontrolled hypertension, current heart failure, or automatic implantable defibrillator; therapeutic anticoagulation; malignancy, newly diagnosed or under current treatment, or recently diagnosed/treated and requiring frequent subspecialist surveillance, examination, and/or laboratory testing; dental or oral conditions requiring or likely to require urgent dental care within six months' time, active orthodontic care, conditions requiring prosthodontic care, conditions with immediate restorative dentistry needs, conditions with a current requirement for oral-maxillofacial surgery; new onset (< 1 year) seizure disorder, or seizure within one year prior to deployment; history of heat stroke; Meniere's Disease or other vertiginous/motion sickness disorder, unless well controlled on medications available in theater; recurrent syncope, ataxias, new diagnosis (< 1 year) of mood disorder, thought disorder, anxiety, somatoform, or dissociative disorder, or personality disorder with mood or thought manifestations; unrepaired hernia; tracheostomy or aphonia; renalithiasis, current; active tuberculosis; pregnancy; unclosed surgical defect, such as external fixeter placement; requirement for medical devices using AC power; HIV antibody positivity; psychotic and bipolar disorders. (Reference: Mod 10 to USCENTCOM Individual Protection and Individual/Unit Deployment Policy, Tab A: Amplification of the Minimal Standards of Fitness for Deployment to the CENTCOM AOR).

(c) In accordance with military directives (DoDI 3020.41, DoDI 6000.11, CFC FRAGO 09-1038, DoD Federal Acquisition Regulation Supplement (DFARS) PGI 225.74), resuscitative care, stabilization, hospitalization at Level III (emergency) military treatment facilities and assistance with patient movement in emergencies where loss of life, limb or eyesight could occur will be provided. Hospitalization will be limited to emergency stabilization and short-term medical treatment with an emphasis on return to duty or placement in the patient movement system. Subject to availability at the time of need, a medical treatment facility may provide reimbursable treatment for emergency medical or dental care such as broken bones, lacerations, broken teeth or lost fillings.

(d) Routine and primary medical care is not authorized. Pharmaceutical services are not authorized for routine or known, routine prescription drug needs of the individual. Routine dental care, examinations and cleanings are not authorized.

(e) Notwithstanding any other provision of the contract, the contractor shall be liable for any and all medically-related services or transportation rendered. To view reimbursement rates that will be charged for services at all DoD deployed medical facilities please got to the following website: http://comptroller.defense.gov/rates/fy2011.html (change fiscal year as applicable).

(End of Clause)

952.225-0004 – COMPLIANCE WITH LAWS AND REGULATIONS (JUL 2010)

(a) The Contractor shall comply with, and shall ensure that its employees and its subcontractors and their employees, at all tiers, are aware of and obey all U.S. and Host Nation laws, Federal or DoD regulations, and Central Command orders and directives applicable to personnel in Iraq and Afghanistan, including but not limited to USCENTCOM, Multi-National Force and Multi-National Corps operations and fragmentary orders, instructions, policies and directives.
(b) Contractor employees shall particularly note all laws, regulations, policies, and orders restricting authority to carry firearms, rules for the use of force, and prohibiting sexual or aggravated assault. Contractor employees are subject to General Orders Number 1, as modified from time to time, including without limitation, their prohibition on privately owned firearms, alcohol, drugs, war souvenirs, pornography and photographing detainees, human casualties or military security measures.

(c) Contractor employees may be ordered removed from secure military installations or the theater of operations by order of the senior military commander of the battle space for acts that disrupt good order and discipline or violate applicable laws, regulations, orders, instructions, policies, or directives. Contractors shall immediately comply with any such order to remove its contractor employee.

(d) Contractor employees performing in the USCENTCOM Area of Responsibility (AOR) may be subject to the jurisdiction of overlapping criminal codes, including, but not limited to, the Military Extraterritorial Jurisdiction Act (18 U.S.C. Sec. 3261, et al) (MEJA), the Uniform Code of Military Justice (10 U.S.C. Sec. 801, et al)(UCMJ), and the laws of the Host Nation. Non-US citizens may also be subject to the laws of their home country while performing in the USCENTCOM AOR. Contractor employee status in these overlapping criminal jurisdictions may be modified from time to time by the United States, the Host Nation, or by applicable status of forces agreements.

(e) Under MEJA, a person who engages in felony misconduct outside the United States while employed by or accompanying the Armed Forces is subject to arrest, removal and prosecution in United States federal courts. Under the UCMJ, a person serving with or accompanying the Armed Forces in the field during a declared war or contingency operation may be disciplined for a criminal offense, including by referral of charges to a General Court Martial. Contractor employees may be ordered into confinement or placed under conditions that restrict movement within the AOR or administratively attached to a military command pending resolution of a criminal investigation.

(f) Contractors shall immediately notify military law enforcement and the Contracting Officer if they suspect an employee has committed an offense. Contractors shall take any and all reasonable and necessary measures to secure the presence of an employee suspected of a serious felony offense. Contractors shall not knowingly facilitate the departure of an employee suspected of a serious felony offense or violating the Rules for the Use of Force to depart Iraq or Afghanistan without approval from the senior U.S. commander in the country.

(End of Clause)

952.225-0005 MONTHLY CONTRACTOR CENSUS REPORTING (AUG 2011)

Contractor shall provide monthly employee census information to the Contracting Officer, by province, for this contract. Information shall be submitted either electronically or by hard-copy. Information shall be current as of the 25th day of each month and received by the Contracting Officer no later than the first day of the following month. The following information shall be provided for each province in which work was performed:

(1) The total number (prime and subcontractors at all tiers) employees.
(2) The total number (prime and subcontractors at all tiers) of U.S. citizens.
(3) The total number (prime and subcontractors at all tiers) of local nationals (LN).
(4) The total number (prime and subcontractors at all tiers) of third-country nationals (TCN).
(5) Name of province in which the work was performed.

(6) The names of all company employees who enter and update employee data in the Synchronized Pre-deployment & Operational Tracker (SPOT) IAW DFARS 252.225-7040 or DFARS DOD class deviation 2011-O0004.

(End of Clause)

952.225-0009 MEDICAL SCREENING AND VACCINATION REQUIREMENTS FOR CONTRACTOR EMPLOYEES OPERATING IN THE CENTCOM AREA OF RESPONSIBILITY (AOR) (AUG 2011)

(a) Contractors and subcontractors at any tier shall ensure and provide satisfactory evidence that all locally hired employees, including Local National (LN), Third Country National (TCN), and U.S. employees, working on bases have been screened for and do not currently have active tuberculosis (TB).

(1) Contractors may initially utilize a testing method of either a chest x-ray or TB skin test (TST), depending on the originating country of a contracted employee.

(i) Chest x-rays (CXR's), symptom survey, and Body Mass Index (BMI) shall be taken, and TSTs administered within 12 months prior to the start of deployment/employment. Contractors are required to bring in a physical copy of the pre-employment CXR film as it is the only way to verify interval changes should an active case of TB occur.

(A) Third Country Nationals (TCNs) and Local Nationals (LNs) cannot be screened with the TST. They need the pre-employment screening with a quality CXR, BMI and symptom survey.

(B) Small-Risk Nationals (SRNs), those with less than 25 TB cases per 100,000 persons annually (mostly expats from Europe and US), can be screened via the TST.

(ii) Annual re-screening for TCNs, and LNs will be performed with a CXR conducted by the Contractor's medical provider or local economy provider who will look for interval changes from prior CXR's and review any changes in the symptom survey.

(iii) SRN's do not require annual TB re-screening. However, for a TB contact investigation, a TST or Interferon Gamma Release Assay (IGRA) is required.

(iv) For a contact investigation, all personnel with a positive TST or IGRA will be evaluated for potential active TB with a symptom screen, exposure history, BMI, and CXR. All cases of suspected or confirmed active TB must be reported to the theater Preventive Medicine (PM) physician and/or TB Consultant as soon as possible. TB reporting is required within 24 hours to the PM POC. Contact tracing, and medical coding have specific requirements. All Small-Risk National (SRN) contract personnel are required to be MEDEVAC'd out of theater, at the contractor's expense, for treatment of active TB, after consultation with the Theater PM or TB Consultant. For SRN personnel, the contractor is responsible for management and compliance with all prescribed public health actions.

(v) Screening may be performed either by a licensed medical provider from the local economy or by the contractors' licensed medical staffs. Contractors shall maintain medical screening documentation and make it available to the Contracting Officer upon request.

(2) TB screening and documentation is a requirement prior to receiving badges to work in the CENTCOM Area of Operations. A copy of the TB screening documentation shall be provided to the responsible Base Operations Center prior to issuance of base access badges.

(b) Contractor employees, including subcontractors at any tier, who work in food service positions and/or water and ice production facilities, shall have current Typhoid and Hepatitis "A" (full series) immunizations in accordance with the Centers for Disease Control and Prevention guidelines (e.g. typhoid vaccination booster is required every 2

years), in addition to the required TB tests. The contractor medical provider must complete a pre-placement examination to include a stool sample test for ova and parasites, and annual medical screening form or equivalent for food service, ice and water production workers.

(c) Proof of individual employee vaccinations shall be provided to the Contracting Officer and COR showing that their employees and their subcontractor employees at any tier have received the above vaccinations. The contractor shall maintain their employees' vaccination records for examination by the Contracting Officer. The contractor shall ensure that their subcontractors at any tier maintain their respective employees' vaccination records for examination by the Contracting Officer.

(d) The contractor is responsible for management and compliance with all prescribed public health actions regarding TB in the contracted personnel. The contractor also bears the responsibility of ensuring that adequate health management for TB (screening/diagnosis/treatment/isolation) is available at the contractor's chosen health care provider for their contracted and subcontracted personnel.

NOTE: Contractors are reminded of the requirement to comply with their contract and all regulatory guidance (DoD Instructions/Regulations, Federal Acquisition Regulation as Supplemented, and FRAGO's) as applicable regarding Medical Screening and Vaccination Requirements.

(End of Clause)

952.225-0011 GOVERNMENT FURNISHED CONTRACTOR SUPPORT (AUG 2011)

The following is a summary of the type of support the Government will provide the contractor, on an "as-available" basis. In the event of any discrepancy between this summary and the description of services in the Statement of Work, this clause will take precedence.

* CAAF means Contractors Authorized to Accompany Forces.

U.S. Citizens Accompanying the Force

☐ APO/FPO/MPO/Postal Services	☐ DFACs	☐ Mil Issue Equip
☐ Authorized Weapon	☐ Excess Baggage	☐ MILAIR
☐ Billeting	☐ Fuel Authorized	☐ MWR
☐ CAAF*	☐ Govt Furnished Meals	☒ Resuscitative Care
☐ Controlled Access Card (CAC)	☐ Military Banking	☐ Transportation
☒ Badge	☐ Military Clothing	☐ All
☐ Commissary	☐ Military Exchange	☐ None
☐ Dependents Authorized		

Third-Country National (TCN) Employees

☐ APO/FPO/MPO/Postal Services	☐ DFACs	☐ Mil Issue Equip
☐ Authorized Weapon	☐ Excess Baggage	☐ MILAIR
☐ Billeting	☐ Fuel Authorized	☐ MWR
☐ CAAF*	☐ Govt Furnished Meals	☒ Resuscitative Care
☐ Controlled Access Card (CAC)	☐ Military Banking	☐ Transportation
☒ Badge	☐ Military Clothing	☐ All
☐ Commissary	☐ Military Exchange	☐ None
☐ Dependents Authorized		

Local National (LN) Employees

☐ APO/FPO/MPO/Postal Services	☐ DFACs	☐ Mil Issue Equip
☐ Authorized Weapon	☐ Excess Baggage	☐ MILAIR

☐ Billeting	☐ Fuel Authorized	☐ MWR
☐ CAAF*	☐ Govt Furnished Meals	☒ Resuscitative Care
☐ Controlled Access Card (CAC)	☐ Military Banking	☐ Transportation
☒ Badge	☐ Military Clothing	☐ All
☐ Commissary	☐ Military Exchange	☐ None
☐ Dependents Authorized		

(End of Clause)

952.225-0013 CONTRACTOR HEALTH AND SAFETY (AUG 2011)

(a) Contractors shall comply with all National Electrical Code (NEC 2008), Specifications as outlined, and MIL Standards and Regulations. All infrastructure to include, but not limited to, living quarters, showers, and restrooms shall be installed and maintained in compliance with these standards and must be properly supported and staffed to ensure perpetual Code compliance, prevent hazards and to quickly correct any hazards to maximize safety of those who use or work at the infrastructure. The government has the authority to enter and inspect contractor employee living quarters at any time to ensure the prime contractor is complying with safety compliance standards outlined in the 2008 National Electric Code (NEC).

(b) The contractor shall correct all deficiencies within a reasonable amount of time of contractor becoming aware of the deficiency either by notice from the government or a third party, or discovery by the contractor. Further guidance on mandatory compliance with NFPA 70: NEC 2008 can be found on the following link http://www.nfpa.org.

(End of Clause)

952.225-0016 CONTRACTOR DEMOBILIZATION (AFGHANISTAN) (AUG 2011)

(a) Full demobilization of contractors and subcontractor(s) in the Afghanistan Combined Joint Operations Area (CJOA) is critical to responsible drawdown. The prime contractor is required to submit a demobilization plan to the Contracting Officer a minimum of 120 days prior to the end of the contract performance period or when requested by the Contracting Officer. The demobilization plan shall address, as a minimum, the following procedures detailed below. The procedures outline specific guidance to ensure a timely and responsible exit from theater. Prime contractors are responsible and accountable to ensure their subcontractor(s) at all tiers comply with responsible and timely exit from theater immediately following contract performance completion or termination.

(1) Exit from Afghanistan: The prime contractor is responsible to remain cognizant of Afghan laws regarding exit from Afghanistan. Currently, all foreigners traveling out of Afghanistan airports via commercial air transportation must have exit visas. Department of Defense, U.S. Forces-Afghanistan, Letters of Authorization (LOAs), and/or Embassy Badges are not accepted means of exiting Afghanistan. All U.S. citizens and foreign national contractors exiting via commercial means must obtain an Afghanistan exit sticker before departing the country. The exit sticker may be obtained from Ministry of Interior (MOI) office. It is the prime contractor's responsibility to ensure that the most recent exit procedures are followed and to ensure that subcontractor(s) at all tiers are in compliance with exit procedures. It is to the responsibility of the contractor to work with the Embassy of Afghanistan or Afghanistan MOI as required.

(2) Letter of Authorization (LOA): The prime contractor is responsible for demobilizing its workforce, including subcontractor employees at all tiers, and all contractor owned and subcontractor owned equipment out of theater as part of the prime contractor's exit strategy. This exit strategy must include reasonable timeframes starting with the end of the contract performance period and not exceeding 30 days. The Contracting Officer has the authority to extend selected LOAs up to, but not exceeding 30 calendar days after the contract completion date to allow the prime contractor to complete demobilization of its workforce and contractor owned equipment, as well as subcontractor(s) workforce and owned equipment, out of the Afghanistan CJOA. The prime contractor shall notify the Contracting Officer a minimum of 30 days prior to the end of the contract period to request up to a 30-day

extension of selected LOAs beyond the contract completion date to complete demobilization. The request shall include at a minimum:

(i) the name of each individual requiring a new LOA;
(ii) the number of days for the LOA (no more than 30 calendar days); and
(iii) justification for the request (e.g., what function the individual(s) will be performing during the demobilization period).

The Contracting Officer may request additional information for an LOA extension. Any LOA extension granted beyond the contract completion date shall not exceed 30 days and the contractor is not entitled to additional compensation for this period. If approved by the Contracting Officer, this is a no cost extension of an employee's LOA due to demobilization and in no way is an extension of the contract performance period.

(3) Badging: The prime contractor is responsible to ensure all employee badges, including subcontractor employees at all tiers, are returned to the local Access Control Badging Office for de-activation and destruction. The prime contractor shall submit a Badge Termination Report to ensure each record is flagged and the badge is revoked. If a prime and/or subcontractor employee's badge is not returned, the prime contractor shall submit a Lost, Stolen or Unrecovered Badge Report to the appropriate Access Control Badging Office. Contractor employees in possession of a Common Access Card (CAC) shall be responsible for turning in the CAC upon re-deployment through a CONUS Replacement Center in the U.S. Failure to return employee badges in a timely manner may result in delay of final payment.

(4) Contractor Controlled Facility Space: If the prime contractor has entered into a Memorandum of Understanding with the Installation Mayor or Garrison for site space, buildings, facilities, and/or Containerized Housing Units (CHU) to house prime and/or subcontractor employees (at all tiers), the prime contractor is responsible to notify the Installation Mayor or Garrison Commander of intent to vacate at least 90 calendar days prior to the end of the contract performance period. All United States Government (USG) provided property in the prime contractor's possession must be returned to the USG in satisfactory condition. The prime contractor is responsible and liable for any and all damages to USG property caused by prime and/or subcontractor employees, and shall be further liable for all cleanup, clearing, and/or environmental remediation expenses incurred by the USG in returning prime contractor and/or subcontractor facilities including surrounding site to a satisfactory condition, including expenses incurred in physically moving property, trash, and refuse from such premises, removing/ remediating hazardous wastes on the premises, and repairing structures, buildings, and facilities used by the prime contractor and/or subcontractor. The prime contractor shall provide notification to the Installation Mayor or Garrison Commander to perform an inspection of all facilities as soon as practicable, but no more than 30 days, after the end of the contract period. If damages are discovered, the prime contractor shall make the necessary repairs. The prime contractor shall notify the Installation Mayor or Garrison Commander for re-inspection of the facilities upon completion of the repairs. If the Installation Mayor or Garrison Commander inspects the property, site space, buildings, facilities, and/or CHUs and finds they have not been properly cleaned, cleared, and/or environmentally remediated, or if the prime contractor fails to repair any damages within 30 calendar days after the end of the contract performance period, the final contract payment shall be reduced by the amount of the specified damages/repairs or the expenses incurred by the USG to properly clean, clear, and/or environmentally remediate the premises.

(5) Government Furnished Equipment/Materials: The prime contractor is responsible to return all USG furnished equipment, as defined in Federal Acquisition Regulation (FAR) Part 45, clauses 52.245-1, if included in the contract. Prime contractors who are not in compliance with the FAR, Defense Federal Acquisition Regulation Supplement, Department of Defense Directives and Instructions, policies, or procedures will be responsible and liable for damages to the government property. The prime contractor may apply for a "relief of responsibility" from the Contracting Officer anytime during the contract performance period. A joint inventory shall be conducted of the equipment by the prime contractor, USG representative, and the Contracting Officer or their representative, within 10 calendar days after the end of the contract performance period. The prime contractor shall report lost, damaged or destroyed property immediately to the Contracting Officer, but no later than the joint inventory at the end of the contract period. If the prime contractor fails to report lost, damaged or destroyed equipment or materials during the

contract performance period, the prime contractor shall be responsible for the replacement and/or repair of the equipment or materials. The replaced equipment shall be new, of the same quality, and shall perform at the same functional level as the missing piece of equipment. If the prime contractor fails to repair and/or replace damaged or missing equipment, the final payment shall be reduced by the appropriate amount of the specified damages or cost to replace missing equipment with new.

(6) Contractor Personal Property: The contractor is advised that all personal property left on the respective installation after the date of departure of said premises, shall be sold or otherwise disposed of in accordance with 10 U.S.C. § 2575.

(i) A request for the return of the property will be honored, if feasible, and if received before the expiration of the period of time allowed to vacate the installation.
(ii) If abandoned property is left on the respective installation, contractual remedies may be enforced against the contractor, (See paragraph (b) of this clause for potential contractual remedies). Additionally, even if the contractor waives its interest to all abandoned personal property, the contractor may still be liable for all costs incurred by the USG to remove or dispose of the abandoned property.
(iii) The contractor hereby authorizes the USG authority to dispose of any and all abandoned personal property in any manner the USG may deem suitable and hereby releases and discharges the USG and its agents from any and all claims and demands whatsoever that could otherwise be asserted because of the disposition of said abandoned personal property.

(7) Synchronized Predeployment Operational Tracker (SPOT): The prime contractor is responsible to close out the deployment of personnel, including subcontractor employees at all tiers, at the end of the contract completion period and to release the personnel from the prime contractor's company in the SPOT database. The release of employee information must be accomplished no more than 30 calendar days after the end of the contract completion date.

(8) Accountability of Prime and Subcontractor Personnel: Whether specifically written into the contract or not, it is the expectation of the USG that for any persons brought into the Afghanistan CJOA for the sole purposes of performing work on USG contracts, contract employers will return employees to their point of origin/home country once the contract is completed or their employment is terminated for any reason. If the prime contractor fails to re-deploy an employee, or subcontractor employee at any tier, the USG shall notify the applicable U.S. Embassy to take appropriate action. Failure by the prime contractor to re-deploy its personnel, including subcontractor personnel at any tier, at the end of the contract completion date, could result in the contractor being placed on the Excluded Parties List System (EPLS) and not be allowed to propose on future U.S. contracts anywhere in the world.

(9) Personnel Recovery: Any DoD contractor with unaccounted for employees shall follow the instructions in the "Contractor Accountability and Personnel Recovery" Clause 952.225-20. The contractor may use the Contracting Fusion Cell as a resource to track or research employees last known location and/or to view LOA's.

(b) CENTCOM - Joint Theater Support Contracting Command (C-JTSCC) and external agencies will utilize all available contracting remedies to guarantee compliance with demobilization requirements. Such actions include, but are not limited to withholding payment, issuing a cure notice, issuing a negative Contractor Performance Assessment Reporting System (CPARS) evaluation, reduction of award fee, debarment, reimbursement of U.S. Government expenses, and/or any other legal remedy available to a contracting officer. The USG reserves the right to withhold payment from the prime contractor not in compliance with the above procedures included herein. Additionally, the Contracting Officer shall document all unresolved contractor compliance issues in CPARS, which shall have an adverse past performance affect on future contracts with the USG, anywhere in the world.

(End of Clause)

952.225-0019 COMMODITY SHIPPING INSTRUCTIONS (AFGHANISTAN) (AUG2011)

(a) **USFOR-A FRAGO 10-200**. United States Forces Afghanistan (USFOR-A) has directed that all shipments into and out of the Combined Joint Operations Area - Afghanistan (CJOA-A) be coordinated through the Defense Transportation System (DTS) in order to expedite the customs clearance process and facilitate the use of in-transit visibility for all cargo in the CJOA-A

(b) **Information regarding the Defense Transportation System (DTS).** For instructions on shipping commodity items via commercial means using DTS, see the following websites:

1. Defense Transportation Regulation – Part II Cargo Movement - Shipper, Trans-shipper, and Receiver Requirements and Procedures: http://www.transcom.mil/dtr/part-ii/dtr_part_ii_203.pdf

2. Defense Transportation Regulation – Part II 4 Cargo Movement – Cargo Routing and Movement: http://www.transcom.mil/dtr/part-ii/dtr_part_ii_202.pdf

3. Defense Transportation Regulation – Part V - Department of Defense Customs and Border Clearance Policies and Procedures: http://www.transcom.mil/dtr/part-v/dtr_part_v_512.pdf

(c) **Responsibilities of the vendor carrier representative, shipping expediter, and/or customs broker:**

1. Afghanistan Import Customs Clearance Request Procedures: The carrier, shipping expediter, and/or customs broker is responsible for being knowledgeable about the Afghan Customs Clearance Procedures.
2. Status of Customs Clearance Requests: All inquiries regarding the status of a customs clearance request prior to its submission to Department of Defense (DoD) Customs and after its return to the carrier representative or shipping expediter should be directed to the carrier or shipping agent.
3. Customs Required Documents: The carrier representative or shipping expediter is required to provide the DoD Contracting Officer Representative (COR) with all documentation that will satisfy the requirements of the Government of the Islamic Republic of Afghanistan (GIRoA).

(d) **Required Customs Documents:** Documents must be originals (or copies with a company stamp). Electronic copies or photocopied documents will not be accepted by GIRoA. The carrier is responsible for checking the current requirements for documentation with the Afghanistan Customs Department (ACD) as specified by the U.S. Embassy Afghanistan's SOP for Customs Clearance Requests Operations (http://trade.gov/static/AFGCustomsSOP.pdf) and paragraph 4 below.

1. The U.S Ambassador Afghanistan diplomatic note guarantees that the U.S. Government (USG) shipments are exempt from Afghanistan Customs duties and taxes. USG shipments do not provide commercial carriers with the authority to unnecessarily delay shipments or holdover shipments in commercial storage lots and warehouses while en route to its final destination. The U.S. Embassy expects that shipments will be expedited as soon as customs clearance paperwork is received from the respective GIRoA officials.

2. Imports: Documentation must list the year, make, model, and color of the commodity, the commodity Identification Number (if applicable) and for vehicles, the Engine Block Number. The following documentation is required for all import shipments:

a. An original Customs Clearance Request (CCR) prepared by the COR in accordance with Afghanistan customs guidance referenced in paragraph 4 below.
b. Bills of Lading (for shipments by sea), Airway Bills (for shipments by air) or Commodity Movement Request (CMRs) (for overland shipments). In the consignee block, type in "US Military". This will help the Afghan Customs officials to recognize that the shipment belongs to the US Military and, therefore, the shipment is subject to tax exemption provisions as specified under the current Diplomatic Note or Military Technical Agreement (MTA).
c. Shipping Invoices.

d. Packing Lists. Required only if the shipping invoice does not list the cargo.
e. An Afghan Government Tax Exemption Form (Muaffi Nama) purchased from the Department of Customs and Revenue and prepared in the local language by the carrier representative, shipping agent, or customs broker.
f. A Diplomatic Note, prepared by DoD Customs, to the Ministry of Foreign Affairs requesting the initiation of customs formalities with the Ministry of Finance, Department of Customs and Exemptions. Please note that DoD Customs is not responsible for registering vehicles.
g. Commercially-owned equipment such as vehicles, construction machinery or generators that are leased and imported to Afghanistan for the performance of a USG contract may be subject to taxes and duties as determined by GIRoA. If commercially-owned equipment is imported into Afghanistan in a duty-free status, that duty-free status only applies as long as the equipment is under the exclusive use of the USG contract. If the equipment is released at the end of the contract, applicable GIRoA duties and taxes will apply to the owner if the equipment is not exported from Afghanistan or transferred to another USG contract.
h. USG-owned vehicles must be exported at the conclusion of the project period or transferred to another USG entity. Under certain conditions, the USG may transfer equipment or vehicles to GIRoA.

3. Exports: The following documentation is required for all export shipments:

a. An original CCR prepared by the COR. If COR is not available, the Contracting Officer (KO) will prepare the CCR.
b. Invoices.
c. Packing Lists. Required only if the shipping invoice does not list the cargo.
d. A Diplomatic Note, prepared by the DoD Customs Cell, to the Ministry of Foreign Affairs requesting the initiation of customs formalities with the Ministry of Finance, Department of Customs and Exemptions.

4. Customs requirements from the GIRoA may change with little notice. For current detailed instructions on customs guidelines in Afghanistan, refer to "The Instruction for Customs Clearance Request (Import/Export) Operations." In all cases, the carrier is required to obtain a copy of this document, found at the following link: http://trade.gov/static/AFGCustomsSOP.pdf

(e) **Point of contact (POC) for customs issues is the USFOR-A Joint Security Office (JSO) J3** at DSN: 318-449-0306 or 449-0302. Commercial to DSN conversion from the United States is (732) 327-5130, choose option #1, and then dial 88-318 followed by your seven-digit DSN number.

(End of Clause)

952.225-0020 CONTRACTOR ACCOUNTABILITY AND PERSONNEL RECOVERY (AFGHANISTAN) (AUG 2011)

(a) Contract performance may require work in dangerous or austere conditions. Except as otherwise provided in the contract, the contractor accepts the risks associated with required contract performance in such operations.

(1) Unaccounted Personnel: It is the expectation of the USG that any contractor brought into Afghanistan for the sole purposes of performance of work on a USG contract must be accounted for at all times by their respective employers. Additionally, contractors who maintain living quarters on a USG base shall verify the location of each of its employees' living quarters a minimum of once a month. If a DoD contracted employee becomes missing and evidence does not indicate foul play, a Personnel Recovery (PR) event is NOT automatically triggered. Such an event will be treated as an accountability battle drill by the employer's chain of command or civilian equivalent.

(2) Contractor Responsibilities: The contractor is responsible to take all necessary steps to locate and investigate the unaccounted for employee(s) whereabouts to the maximum extent practicable. To assist in this process, contractors may use the Contracting Fusion Cell as a resource to track or research employee's last known

location and/or to view LOA's. All missing personnel will be immediately reported to the installation division Personnel Recovery Officer (PRO), Mayor's cell, Military Police Station and/or the Criminal Investigative Division, and the Base Defense Operations Center (BDOC).

(3) Contractor Provided Information: If it is determined that a potential criminal act has occurred, the USD PRO (or USFOR-A Personnel Recovery Division (PRD) with prior coordination) will attempt to validate the missing person's identity through the employer. The contractor shall provide the information to PRD within 12 hours of request. The required information the contractor should keep on file includes but is not limited to: copy of the individuals Letter of Authorization generated by the Synchronized Pre-deployment and Operational Tracker System (SPOT), copy of passport and visas, housing information of where the individual resides such as room number and location, DD Form 93, Record of Emergency Data, copy of badging, and contact information for known friends or associates.

(b) If USFOR-A PRD determines through investigation that the unaccounted personnel have voluntarily left the installation either seeking employment with another contractor or other non-mission related reasons, PRD will notify the contractor. The contractor shall ensure that all government-related documents such as LOA's, visas, etc. are terminated/reconciled appropriately within 24 hours of notification by PRD in accordance with subparagraph (a)(8) of C-JTSCC Clause 952.225-0016 entitled "Contractor Demobilization (Afghanistan)". Contractors who fail to account for their personnel or whose employees create PR events will be held in breach of their contract and face all remedies available to the Contracting Officer.

(End of Clause)

952.236-0001 ELECTRICAL AND STRUCTURAL BUILDING STANDARDS FOR CONSTRUCTION PROJECTS (AUG 2011)

(a) The standards set forth herein are the minimum requirements for the contract. These standards must be followed unless a more stringent standard is specifically included. In such case the most stringent standard shall be required for contract acceptance.

(b) The contractor, in coordination with the Contracting Officer, Base Camp Mayor, Base/Unit Engineers, and requiring activity shall evaluate, upgrade, build, and/or refurbish buildings to a safe and livable condition. This work may include refurbishment, construction, alterations, and upgrades. All work shall be in accordance with accepted standards of quality.

(c) As dictated by the Unified Facilities Criteria (UFC) the contract shall meet:

(1) "the minimum requirements of United States' National Fire Protection Association (NFPA) 70,
(2) 2011 National Electrical Code (NEC),
(3) American National Standards Institute (ANSI) C2, and
(4) United States' National Electrical Safety Code (NESC).

(d) These standards must be met when it is reasonable to do so with available materials. When conditions dictate deviation, then provisions within the International Electrical Code (IEC) or British Standard (BS 7671) shall be followed. Any deviations from the above necessary to reflect market conditions, shall receive prior written approval from a qualified engineer and the Contracting Officer.

(e) The following internet links provide access to some of these standards:

UFC: http://www.wbdg.org/ccb/browse_cat.php?o=29&c=4
NFPA 70: http://www.nfpa.org
NESC: http://www.standards.ieee.org/nesc

(End of Clause)

PROJECT TABLE OF CONTENTS

DIVISION 00 - PROCUREMENT AND CONTRACTING REQUIREMENTS

00 31 10 METRIC MEASUREMENTS

DIVISION 01 - GENERAL REQUIREMENTS

01 10 00.12 10 SCOPE OF WORK
01 31 13.12 10 SPECIAL CLAUSES
01 32 17.00 20 NETWORK ANALYSIS SCHEDULES (NAS)
01 33 00.12 10 SUBMITTAL PROCEDURES FOR DESIGN-BUILD PROJECT
01 33 00 SUBMITTAL PROCEDURES
01 35 26 GOVERNMENTAL SAFETY REQUIREMENTS
01 42 00 SOURCES FOR REFERENCE PUBLICATIONS
01 45 02.00 10 QUALITY CONTROL SYSTEM (QCS)
01 45 04.00 10 CONTRACTOR QUALITY CONTROL
01 62 35 RECYCLED / RECOVERED MATERIALS

-- End of Project Table of Contents --

SECTION TABLE OF CONTENTS

DIVISION 00 - PROCUREMENT AND CONTRACTING REQUIREMENTS

SECTION 00 31 10

METRIC MEASUREMENTS

1.1 REFERENCES
1.2 GENERAL
1.3 USE OF MEASUREMENTS IN SPECIFICATIONS
1.3.1 Hard Metric
1.3.2 Soft Metric
1.3.3 Neutral
1.4 COORDINATION
1.5 RELATIONSHIP TO SUBMITTALS

-- End of Section Table of Contents --

SECTION 00 31 10

METRIC MEASUREMENTS

1.1 REFERENCES

The publications listed below form a part of this specification to the extent referenced. The publications are referred to within the text by the basic designation only.

ASTM INTERNATIONAL (ASTM)

ASTM E 621	(1994; R 1999e1) Use of Metric (SI) Units in Building Design and Construction (Committee E-6 Supplement to E380)
ASTM SI 10	(2002) American National Standard for Use of the International System of Units (SI): The Modern Metric System

1.2 GENERAL

This project includes metric units of measurements. The metric units used are the International System of Units (SI) developed and maintained by the General Conference on Weights and Measures (CGPM); the name International System of Units and the international abbreviation SI were adopted by the 11th CGPM in 1960. A number of circumstances require that both metric SI units and English inch-pound (I-P) units be included in a section of the specifications. When both metric and I-P measurements are included, the section may contain measurements for products that are manufactured to I-P dimensions and then expressed in mathematically converted metric value (soft metric) or, it may contain measurements for products that are manufactured to an industry recognized rounded metric (hard metric) dimensions but are allowed to be substituted by I-P products to comply with the law. Dual measurements are also included to indicate industry and/or Government standards, test values or other controlling factors, such as the code requirements where I-P values are needed for clarity or to trace back to the referenced standards, test values or codes.

1.3 USE OF MEASUREMENTS IN SPECIFICATIONS

Measurements in specifications shall be either in SI or I-P units as indicated, except for soft metric measurements or as otherwise authorized. When only SI or I-P measurements are specified for a product, the product shall be procured in the specified units (SI or I-P) unless otherwise authorized by the Contracting Officer. The Contractor shall be responsible for all associated labor and materials when authorized to substitute one system of units for another and for the final assembly and performance of the specified work and/or products.

1.3.1 Hard Metric

A hard metric measurement is indicated by an SI value with no expressed correlation to an I-P value. Hard metric measurements are often used for field data such as distance from one point to another or distance above the

floor. Products are considered to be hard metric when they are manufactured to metric dimensions or have an industry recognized metric designation.

1.3.2 Soft Metric

a. A soft metric measurement is indicated by an SI value which is a mathematical conversion of the I-P value shown in parentheses (e.g. 38.1 mm (1-1/2 inches)). Soft metric measurements are used for measurements pertaining to products, test values, and other situations where the I-P units are the standard for manufacture, verification, or other controlling factor. The I-P value shall govern while the metric measurement is provided for information.

b. A soft metric measurement is also indicated for products that are manufactured in industry designated metric dimensions but are required by law to allow substitute I-P products. These measurements are indicated by a manufacturing hard metric product dimension followed by the substitute I-P equivalent value in parentheses (e.g., 190 x 190 x 390 mm (7-5/8 x 7-5/8 x 15-5/8 inches)).

1.3.3 Neutral

A neutral measurement is indicated by an identifier which has no expressed relation to either an SI or an I-P value (e.g., American Wire Gage (AWG) which indicates thickness but in itself is neither SI nor I-P).

1.4 COORDINATION

Discrepancies, such as mismatches or product unavailability, arising from use of both metric and non-metric measurements and discrepancies between the measurements in the specifications and the measurements in the drawings shall be brought to the attention of the Contracting Officer for resolution.

1.5 RELATIONSHIP TO SUBMITTALS

Submittals for Government approval or for information only shall cover the SI or I-P products actually being furnished for the project. The Contractor shall submit the required drawings and calculations in the same units used in the contract documents describing the product or requirement unless otherwise instructed or approved. The Contractor shall use ASTM SI 10 and ASTM E 621 as the basis for establishing metric measurements required to be used in submittals.

-- End of Section --

SECTION TABLE OF CONTENTS

DIVISION 01 - GENERAL REQUIREMENTS

SECTION 01 10 00.12 10

SCOPE OF WORK

-- End of Section Table of Contents --

SECTION 01 10 00.12 10

SCOPE OF WORK

PART 1 GENERAL

1.1 PROJECT DESCRIPTION

This project consists of the design and construction of a paved apron for rotary-wing and fixed wing aircraft, with connecting taxiway, shoulders and pavement markings to suit the various mission requirements at Herat Air Base in Afghanistan. Work will include two soft-side aircraft shelters, grounding points, edge lighting, utilities and other necessary site improvements including but not limited to clearing, grading, and necessary storm drainage measures such as culverts, rip-rap, etc. Contractor shall perform site specific geotechnical investigation as required in the TECHNICAL REQUIREMENTS. Contractor shall also perform the necessary topographic survey as required under TECHNICAL REQUIREMENTS. The Contractor shall relocate any existing utilities, cables, etc., as required for the construction. The work shall include the preparation of construction design documents and the construction required to provide fully functional facilities. The facilities shall be designed and constructed in accordance with current U.S. Design Standards, safety, security, ecological standards, applicable local standards and other criteria as defined in the TECHNICAL REQUIREMENTS. The Contractor may have an onsite concrete batch plant. Areas for stock piling and the batch plant will be designated by the Contracting Officer.

1.2 LOCATION

The rotary / fixed wing aircraft apron will be sited adjacent to existing runway within the perimeter of the Herat airbase located in Afghanistan.

1.3 MAINTAIN AIR TRAFFIC

The Herat Air Base will remain operational during construction of this project. The contractor should be aware of the fact that Herat will have multiple projects possibly being constructed at the same time. Therefore, the contractor shall be required to coordinate actions through the AES project manager.

1.4 SUMMARY OF WORK

The Contractor shall design and construct the work listed as a design-construct contract and in accordance with the requirements stated in the specification sections and other contract documents.

1.5 EXECUTION OF WORK

In addition to work being executed in accordance with the Technical Requirements described in this package, all work and phasing of work must be coordinated through the USACE Contracting Officer's Representative (COR). It will be imperative that the contractor take into consideration the potential to have other on-going construction work and coordinate efforts under this contract in conjunction with other work to avoid schedule impacts and other conflicts.

1.6 CONTRACTOR MOBILIZATION AREA

The Contractor will need to confirm the location of the mobilization area or lay-down yard with the Contracting Officer and Commander Herat Airfield's (COMKSAF) Planning Board. The Contractor will have an opportunity to visit the site and will need to coordinate a precise location for their lay-down yard mobilization area. Mobilization is covered in more detail in the SPECIAL CLAUSES SECTION of the specifications.

1.7 USE OF AFGHAN WORKFORCE, MATERIALS, AND EQUIPMENT
The Contractor is encouraged to use Afghan labor and subcontractors to the maximum extent possible commensurate with technical, security or other requirements or necessary considerations. The Contractor is encouraged to use locally produced Afghan materials and equipment to the extent that each can satisfy contract requirements, including all technical or other specifications

1.8 HAUL ROUTES AND OTHER ROADS
All proposed haul routes required by the contractor need to be approved by the Contracting Officer.

1.9 SITE CLEANUP, DEMOLITION, AND GRADING
If necessary, the contractor shall perform demolition at the site as required prior to commencement of new work. The contractor shall remove and dispose of debris, concrete pavements, foundations, excavated soils and other construction waste materials to a location determined by the Contracting Officer's Representative. The contractor shall be responsible for the final site grading and drainage required for all work identified in this contract in accordance with the TECHNICAL REQUIREMENTS SECTION of these specifications.

1.10 UNEXPLODED ORDNANCE (UXO)
The contract limits of this project are believed to be clear of UXO, however, UXO may be discovered and/or uncovered within or around the construction work areas. If, during construction activities, UXO is unexpectedly discovered or uncovered, or suspected to be present, all operations shall cease immediately. The Contractor shall safeguard the site pending notification and arrival of the Government's UXO team. No further work shall be conducted in that location until the Government's UXO team has assessed the situation to determine if disposal action is required. Once the UXO has been removed and the Government's UXO team has issued an "All Clear" notice, construction work may continue.

1.11 SECURITY
The Contractor shall comply with current base security requirements to include trans-loading aggregates before entering the base and inspection of vehicles. Adequate outside security lighting shall be provided at the contractor's temporary facilities. The contractor shall be responsible for security of its own facilities, personnel, and equipment.

-- End of Section --

SECTION TABLE OF CONTENTS

DIVISION 01 - GENERAL REQUIREMENTS

SECTION 01 31 13.12 10

SPECIAL CLAUSES

-- End of Section Table of Contents --

SECTION 01 31 13.12 10

SPECIAL CLAUSES

PART 1 GENERAL

1.1 PRECONSTRUCTION CONFERENCE

1.1.1 Schedule of Meeting

At the earliest practicable time, prior to commencement of the work, the Contractor and any Subcontractors whose presence is necessary or requested, shall meet in conference with representatives of the Contracting Officer to discuss and develop a mutual understanding relative to the details of the administration and execution of this contract. This will include but not necessarily be limited to the Contractor's Quality Control (CQC) Program, the Contractors Accident Prevention Program, submittals, correspondence, schedule, access to the work site, security requirements, interface requirements, temporary facilities and services, hazards and risks, working after normal hours or on weekends or holidays, assignment of inspectors, representations, special requirements, phasing, and other aspects of this project that warrant clarification and understanding.

1.1.2 Meeting Minutes

It shall be the responsibility of the Contractors CQC System Manager to prepare detailed minutes of this meeting and submit those minutes to the Contracting Officer for approval within three (3) workdays. Any corrections deemed necessary by the Contracting Officer shall be incorporated and resubmitted within two (2) calendar days after receipt. Upon approval of the minutes by the Contracting Officer, the Contractor shall distribute the minutes to all parties present or concerned.

1.2 AREA USE PLAN

The Contractor shall submit to the Contracting Officer, within ten (10) calendar days after Notice to Proceed, an Area Use Plan designating intended use of all areas within the project boundaries. This plan shall include, but not necessarily be limited to the following: the proposed location and dimensions of any area to be fenced and used by the Contractor; construction plant and building installations/the number of trailers and facilities to be used; avenues of ingress/egress to the fenced areas and details of the fence installation; drawings showing temporary electrical installations; well installation plan and location of contractor installed water well; temporary water and sewage disposal installations; material storage areas; hazardous storage areas. Any areas that may have to be graveled shall also be identified. The plan shall also include a narrative description of the building structural system, the site utility system and the office or administration facilities. The Contractor shall also indicate if the use of a supplemental or other staging area is desired. The Contractor shall not begin construction of the mobilization facilities prior to approval by the Contracting Officer of the Area Use Plan described herein.

1.3 CONTRACTOR'S MOBILIZATION AREA

The Contractor will be permitted to use an area designated by the Contracting

Officer within the contract limits for operation of his construction equipment and plants, shops, warehouses, and offices. Utilities will be provided for the Contractor as described below. The Contractor is responsible for obtaining any required additional mobilization area above that designated. The construction site shall be cleared of construction debris and other materials and the area restored to its final grade.

1.3.1 Contractor's Temporary Facilities

1.3.1.1 General

All facilities within the Contractor's mobilization area shall be of substantial construction suitable for the local weather conditions. Sanitary facilities shall meet the requirements of Corps of Engineers, Safety and Health Requirements Manual EM 385-1-1. Local nationals will not be granted any privileges under this contract. Government provided services are for American and Foreign national contractors only. Government dining facilities are available for Contractor's use.

1.3.1.2 Administrative Field Offices

The Contractor shall provide and maintain administrative field office facilities for the Quality Assurance Representative (QAR) within the mobilization area at the designated site. Government office and warehouse facilities will not be available to the Contractor's personnel.

1.3.1.3 Storage Area

The Contractor shall construct a temporary 1.8 meter (6 foot) high chain link fence around trailers and materials. The fence shall include plastic strip inserts, colored green or brown, so that visibility through the fence is obstructed. Fence posts may be driven, in lieu of concrete bases, where soil conditions permit. Trailers, materials, or equipment shall not be placed or stored outside the fenced area unless approved in writing by the Contracting Officer.

1.3.1.4 Plant Communication

Whenever the Contractor has the individual elements of its plant so located that operation by normal voice between these elements is not satisfactory, the Contractor shall install a satisfactory means of communication, such as telephone or other suitable devices. These devices shall be made available for use by Government personnel. The Contractor shall make arrangements to install and pay all costs for telephone facilities desired.

1.3.1.5 Appearance of Mobilization Site Facilities and/or Trailers

Mobilization Site Facilities and/or Trailers utilized by the Contractor for administrative or material storage purposes shall present a clean and neat exterior appearance and shall be in a state of good repair. Trailers or other transportable structures which, in the opinion of the Contracting Officer, require exterior painting or maintenance will not be allowed on the construction site until such work or maintenance has been performed to the satisfaction of the Contracting Officer.

1.3.1.6 Maintenance of Storage Area

Fencing shall be kept in a state of good repair and proper alignment. Should the Contractor elect to traverse unpaved areas which are not established

roadways with construction equipment or other vehicles, such areas shall be covered with a layer of gravel as necessary to prevent rutting and the tracking of soil onto paved or established roadways; gravel gradation shall be at the Contractor's discretion.

1.3.1.7 Security Provisions

Adequate outside security lighting shall be provided at the Contractor's temporary facilities. The Contractor shall be responsible for the security of its own facilities and equipment.

1.3.1.8 Water

1.3.1.8.1 General

The contractor is responsible for providing water for construction and for his use in Contactor's Life Support Area.

1.3.1.9 Sanitation

a. Sanitary Facilities: The Government will provide portable sanitation facilities for the Contractor's use. If the Contractor elects to bring in his own sanitary facilities within the site boundaries, the Government shall provide waste removal services for Government provided facilities only.

b. Trash Disposal: The Contractor shall be responsible for collection and disposal of trash from the work areas and from the mobilization area. General construction debris and demolition debris shall be collected and transported by the Contractor to a location designated by the Government. Construction debris, waste materials, packaging material and the like shall be removed from the work site daily. Loose debris capable of being windblown, shall be immediately placed in sealed or covered containers to prevent it from being blown onto taxiways or runways. Any dirt or soil that is tracked onto paved or surfaced roadways shall be cleaned daily. Materials resulting from demolition activities that are salvageable shall be stored within the fenced area described above. Stored material not indoors, whether new or salvaged, shall be neatly stacked when stored.

1.3.1.10 Restoration of Storage Area

Upon completion of the project and after removal of mobilization facilities, trailers, materials, and equipment from within the fenced area, the fence shall be removed and will become the property of the Contractor. Areas used by the Contractor for the storage of equipment or material, or other use, shall be restored to the original or better condition. Gravel used to traverse unpaved areas shall be removed and all such areas restored to their original conditions.

1.3.2 Protection and Maintenance of Traffic

During construction the Contractor shall provide access and temporary relocated roads as necessary to maintain traffic. The Contractor shall maintain and protect traffic on all affected roads during the construction period except as otherwise specifically directed by the Contracting Officer. Measures for the protection and diversion of traffic, including the provision of watchmen and flagmen, erection of barricades, placing of lights around and in front of equipment and the work, and the erection and maintenance of adequate warning, danger, and direction signs, shall be as required by the Host Nation and base authorities having jurisdiction. The traveling public

shall be protected from damage to person and property. The Contractor's traffic on roads selected for hauling material to and from the site shall interfere as little as possible with base traffic. The Contractor shall investigate the adequacy of existing roads and the allowable load limit on these roads. The Contractor shall be responsible for the repair of any damage to roads caused by construction operations. If the Contracting Officer determines that adequate flow and safety are not being sufficiently provided, the Contractor, at his own expense, shallprovide sufficient, additional measures to alleviate the situation.

1.3.2.1 Use of Existing Roads as Haul Routes

The Contractor shall be responsible for coordinating with the base authorities for use of any existing roads as haul routes. Construction, and routing of new haul roads, and/or upgrading of existing roads to carry anticipated construction traffic shall be coordinated with the Base authorities and is the sole responsibility of the Contractor.

1.3.2.2 Employee Parking

The Contractor's employees may be allowed parking on the military installation. The Contractor is responsible for transporting workers (local nationals) from off post to the worksite, coordinating security identification screening, and cooperating in gate searches with the base authorities. The government reserves the right to terminate any and all contractor parking at any time.

1.3.3 Temporary Project Safety Fencing and Barricades

The Contractor shall impose all measures necessary to limit public access to hazardous areas and to ensure the restriction of workers to the immediate area of the construction and mobilization site. The Contracting Officer may require in writing that the Contractor remove from the work any employee found to be in violation of this requirement.

1.3.3.1 Barricades

Barricades shall be required whenever safe public access to paved areas such as roads, parking areas or sidewalks is prevented by construction activities or as otherwise necessary to ensure the safety of both pedestrian and vehicular traffic. Barricades shall be securely placed, clearly visible with adequate illumination to provide sufficient visual warning of the hazard during both day and night. Travel to and from the project site shall be restricted to a route approved by the Contracting Officer.

1.3.4 Host Nation Authorizations, Permits and Licenses

It shall be the Contractor's responsibility to obtain such local authorizations, permits and licenses necessary to establish any quarry operations, batching operations and haul routes (See Special Clause entitled: COMPLIANCE WITH HOST COUNTRY RULES AND CUSTOMS).

1.4 AIRFIELD PAVEMENT WORKSHOP (AWP)

The Contractor shall plan for an Airfield Pavement Workshop (APW) for an approximately two (2) week period during the initial construction phase of the airfield pavement work, ideally during the Preparatory and/or Initial Phase Inspections. The APW is conducted by U.S. Army Corps of Engineers (USACE) Transportation Systems Center (TSC) and provides additional direction

and technical support during start-up activities for the construction phase for airfield pavement projects executed by USACE. The APW may include a group presentation, observation and analysis of test section construction, verification of plant calibration, and observation of work quality during early phases of concrete paving.

There shall be no additional compensation for attending this workshop. Contractor representatives in attendance shall include those personnel typically present during the Preparatory Phase Inspection. The contractor shall coordinate the specific time and location with the Contracting Officer. Contractor shall note that TSC requires a minimum of 60 calendar days advance notice to conduct the APW. Further directions will be given at the Pre-Construction Conference.

1.5 RESPONSIBILITY FOR PHYSICAL SECURITY

Prior to mobilization, the Contractor shall submit his proposed means of providing project security to prevent unauthorized access to equipment, facilities, materials and documents, and to safeguard them against sabotage, damage, and theft. The Contractor shall be responsible for physical security of all materials, supplies, and equipment of every description, including property which may be Government-furnished or owned, for all areas occupied jointly by the Contractor and the Government, as well as for all work performed.

1.6 NOT USED

1.7 DUST CONTROL

The Contractor shall be required to control objectionable dust in the work areas, access roadways, and haul roads by means of controlled vehicle speeds or dust palliatives. Vehicles transporting sand, cement, gravel or other materials creating a dust problem shall be covered, as directed by the Contracting Officer, or in accordance with local Laws, codes, and regulations.

1.8 FOREIGN OBJECTS DAMAGE CONTROL

The Contractor shall prepare and submit to the Contracting Officer, for approval, his plan to control Foreign Objects Damage (FOD) at its mobilization site, construction site and during work on or near aircraft runways and/or taxiways. The plan shall be specific and shall describe in detail measures to be implemented to prevent deposit of foreign objects on aprons, runways, and taxiways during construction. The Foreign Objects Damage control plan shall be submitted fifteen (15) calendar days prior to the start of any work on or near aircraft runways or taxiways. No work will be allowed near any aprons, runways or taxiways without approval of the FOD control plan by the Contracting Officer.

1.9 ENGLISH SPEAKING REPRESENTATIVE

At all times when any performance of the work at any site is being conducted by any employee of the Contractor or its subcontractors, suppliers, or vendors at any tier, the Contractor shall have a representative present at each site who has the capability of receiving instructions in the English language, fluently speaking the English language and explaining the work operations to persons performing the work in the language that those performing the work are capable of understanding. The Contracting Officer shall have the right to determine whether the proposed representative has

sufficient technical and lingual capabilities, and the Contractor shall immediately replace any individual not acceptable to the Contracting Officer. It is the responsibility of the Contractor to have someone on the work site at all times who can communicate with and in constant contact with the Control Tower.

1.10 DIGGING PERMITS

1.10.1 Requirements for Digging Permits

Prior to the start of any work activity that requires excavation within the current base, the Contractor shall obtain a digging permit. POC will be provided by Contracting Officer.

1.10.2 Requests for Digging Permits

Requests for Digging Permits shall be submitted to Contracting Officer a minimum of seven (7) days prior to the start of the work activity covered by the permit. The request for a Digging Permit shall include a narrative description of the work to be performed and a detailed map of the area of the excavation clearly marking the location of all known utilities or other obstructions. If the work activity covered by the Digging Permit request also requires a utility outage, a separate request for the outage shall be submitted in accordance with the paragraph entitled CONNECTIONS TO EXISTING UTILITIES.

1.10.3 Preparation of Requests for Digging Permits

Prior to submitting a request for a Digging Permit, the Contractor shall carefully review the area to be excavated to determine the location of existing utilities and other obstructions. The Contractor will review available drawings and will conduct a visual inspection of the site. The Contractor will utilize underground utility detecting devices such as metal and cable detectors to determine the location of existing utilities. All utility lines found shall be clearly flagged or marked and the location of the utility shall be shown on the drawing to be submitted with the request for Digging Permit.

1.10.4 Existing Underground Utilities

The Contractor shall exercise utmost care in researching locations of existing utilities and reducing damage to existing utilities. Any utilities damaged by the Contractor shall be promptly repaired by the Contractor. The Contracting Officer will review and approve any proposed repairs. Any damage to existing utilities will be immediately reported to the Contracting Officer and the Base Commander.

1.11 CONNECTIONS TO EXISTING UTILITIES

1.11.1 General

Any outage of any utility service shall be requested in writing at least ten (10) calendar days in advance of the date requested for the commencement of the outage. The Contractor shall provide a request, detailing the type of outage needed (water, sewer, electrical, steam, etc.), the time needed to perform the work, the reason for the outage, and the known affected facilities. The Contracting Officer shall be contacted prior to the outage to confirm the time and date. If the Contractor fails to initiate work at the approved time, the Contracting Officer may cancel the approved outage and may

direct the Contractor to resubmit a new request. No part of the time lost due to the Contractors failure to properly schedule an outage shall be made the subject of claim for extension of time or for excess costs or damages by the Contractor.

1.11.1.1 Performance of Work During Non-Standard Hours

To minimize outage impact to the mission of the installation, all outages shall be scheduled on weekends or from 2100 - 0530 hours on duty days. The period proposed for performance of the outage shall include sufficient contingencies to preclude impact to the peak working hours 0530 - 1800 hours during the workweek.

1.11.2 Existing Underground Utilities

The Contractor is provided notice that existing utilities may be present in the construction area. The Contractor shall exercise the utmost care in researching locations of existing utility lines by implementing control measures to eliminate, or reduce to a level acceptable to the Contracting Officer, the chance of damaging or destroying existing utilities.

1.11.2.1 Use of Underground Utility Detecting Device

Prior to any excavation, a metal and/or cable-detecting device shall be used along the route of the excavation. All underground utilities discovered by this method will be flagged a minimum distance of one-half (1/2) meter on each side of the location.

1.11.2.2 Hand Excavation

Hand excavation methods and special supervisory care shall be used between any flagged markers, in areas of known or suspected hazards, and in areas known or suspected to have multiple and/or concentrated utility lines or connections.

1.11.3 Repair of Damaged Utilities

The Contractor shall be responsible to repair any utilities damaged by him. The method of repair and schedule for performance of the repair shall be coordinated with, and subject to the approval of, the Contracting Officer. The repair work and any temporary work required to keep the system operational while repairs are being completed, shall be performed at no cost to the Government.

1.12 WATER

The Contractor shall install and maintain any necessary supply connections and piping for same, but only at such locations and in such manner as may be approved by the Contracting Officer. Water required for final testing, adjusting and balancing of HVAC systems will be furnished by the Government. Before final acceptance of systems, or facilities, all temporary connections and piping installed by the Contractor shall be removed at his expense in a manner satisfactory to the Contracting Officer.

1.13 NOT USED

1.14 ELECTRICITY (CONTRACTOR PROVIDED)

Electrical service may or may not be available for use under this contract;

therefore all electric current required by the Contractor shall be the responsibility of the Contractor, furnished at his own expense. The Contractor shall provide diesel generators to meet his demand requirements. Electricity required for final testing systems will be furnished by the Government. The Government will provide permanent high voltage electricity to a point indicated by the Contracting Officer for use by the Contractor in the performance of final testing of systems. The means of doing so, such as by temporary distribution systems, shall be the responsibility of the Contractor. All temporary connections for electricity shall be subject to the approval of the Contracting Officer and shall comply with Corps of Engineers manual EM 385-1-1 entitled Safety and Health Requirements Manual. All temporary lines shall be furnished, installed, connected and maintained by the Contractor in a workmanlike manner satisfactory to the Contracting Officer. Before final acceptance of systems, or facilities, all temporary connections installed by the Contractor shall be removed at his expense in a manner satisfactory to the Contracting Officer.

1.15 NOT USED

1.16 NOT USED

1.17 NOT USED

1.18 WORK OUTSIDE REGULAR HOURS

If the Contractor desires to carry on work outside regular base duty hours, or on holidays (including the following U.S. holidays: New Year's Day, Martin Luther King Jr's Birthday, George Washington's Birthday, Memorial Day, Independence Day, Labor Day, Columbus Day, Veteran's Day, Thanksgiving and Christmas), he shall submit an application to the Contracting Officer. The Contractor shall allow ample time to enable satisfactory arrangements to be made by the Government for inspecting the work in progress. At night, exterior lighting shall be provided in conformance with EM-385-1-1 entitled "Safety and Health Requirements Manual".

1.19 NOT USED

1.20 NOT USED

1.21 NOT USED

1.22 NOT USED

1.23 NOT USED

1.24 RESIDENT MANAGEMENT SYSTEM (RMS)

1.24.1 General

The requirements contained herein are in addition to and supplement the requirements mandated by Section 01 45 02.00 10 QUALITY CONTROL SYSTEM (QCS). The Resident Management System is an automated quality management and contract administration system that provides an efficient method to plan, accomplish, and control project management by integrating job specific requirements, corporate technical knowledge, and management policies. RMS controls the following activities:

a. Project Planning.
b. Milestone Events.

c. Contract Administration.
d. Progress Payments.
e. Correspondence.
f. Contract Schedule.
g. Quality Control.
h. Submittal Register.
i. Accident Prevention.
j. Management Reporting.

1.24.2 Computer Software to be Furnished by the Government

The software program modules required for the Contractor shall be downloaded from the RMS web site located at the following:

http://www.rmssupport.com/rmswebhome.aspx. No login or password is required. For assistance with the QCS program, the Contractor may contact the RMS Help Desk Coordinator. Contact information is provided within the Contacts portion of the aforementioned website. New versions of the Contractor's Module may be down loaded from the RMS web site during the course of the contract, and the contractor shall use the new modules when available. It is the sole responsibility of the Contractor to ensure that the data files are converted to the new modules.

1.24.3 RMS User Guides and Support

The RMS Center is maintained to assist the Contractor's field engineers and office personnel perform their duties by providing expertise to plan, accomplish, and control the daily technical and administrative functions of construction projects managed by the U.S. Army Corps of Engineers. Points of contact, available guides, software updates and assistance with the associated Quality Control System (QCS) program may be obtained from the RMS home page located at the following http://www.rmssupport.com/rmswebhome.aspx No login or password is required.

1.24.4 Contractor Responsibility

The Contractor is responsible for establishing, maintaining and updating the provided Contractors Programming. The RMS shall be prepared and maintained at the work site. The Contractor shall utilize a Government furnished Contractor Quality Control System (QCS) Program. The Program includes a QC Daily Reports form which must also be used. This form may be in addition to other Contractor desired reporting forms. However, all other such reporting forms shall be consolidated into this one Government specified QC Daily Reports Form.

1.24.4.1 Government-Furnished Module Elements

The Contractor shall also be required to complete Government-Furnished Module elements which include, but are not limited to, subcontractor codes, planned cumulative progress earnings, subcontractor information showing trade, name, address, point-of-contact, and insurance expiration dates, definable features of work, pay activity and activity information, required Quality Control tests tied to individual activities, planned Customer/User Training tied to specific specification paragraphs and Contractor activities, Installed Property Listing, Transfer Property Listing and Submittal information relating to specification section, description, activity number, review period and expected procurement period. The sum of all activity values shall equal the contract amount (inclusive of all modifications), and all Proposal Schedule Items, Options and Additives shall be separately identified, in

accordance with Section 00010 entitled SUPPLIES OR SERVICES AND PRICES/COSTS. Proposal Schedule items may include multiple activities, but activities may only be assigned to one such Proposal Schedule item.

1.24.4.2 Quality Assurance Comments

During the course of the contract, the Contractor will receive various quality assurance comments from the Government that will reflect corrections needed to Contractor activities or reflect outstanding or future items needing the attention of the Contractor. The Contractor shall acknowledge receipt of these comments by a specific sequential number reference on his QC Daily Report. The Contractors QC daily reports shall also reflect the scheduled and actual dates when these items are completed or corrected to permit Government verification.

1.24.4.3 Project Schedule

The Project Schedule provided by the Contractor in compliance with Section 01 32 17.00 20 NETWORK ANALYSIS SCHEDULES (NAS), of the Technical Provisions, shall be fully compatible with the RMS System. The RMS system is compatible with the Standard Data Exchange Format(SDEF)scheduling systems. It is recommended that one of the following software programs be utilized: Approach (PPMS 30,000), AlderGraf Systems (AlderGraf), Pinnell-Busch (PMS-80), Primavera Systems, Welcome Technologies (Open Plan). The Contractor's schedule system shall include, as specific and separate activities, all three (3) Phase Inspection meetings, all Operation and Maintenance (O&M) Manuals, instructions and training for operation and maintenance, Contractor furnished spare parts, submittals, all test plans of electrical and mechanical equipment or systems that require validation testing or instructions to Government Representatives, and all CQC completion inspections.

1.24.5 Payment

Separate payment will not be made for maintaining and updating the RMS System, and all costs associated therewith shall be included in the applicable unit prices or lump-sum prices contained in the Proposal Schedule. Submission of all required modules shall be completed to the satisfaction of the Contracting Officer prior to any contract payment (except for Bonds, Insurance and/or Mobilization, as approved by the Contracting Officer) and shall be updated as required. The Contracting Officer may elect to withhold any and all partial payments until the submissions are satisfactory.

1.24.6 RMS Implementation Plan

The Contractor shall furnish for review and acceptance by the Government, not later than twenty (20)calender days after receipt of Notice To Proceed, the plan for implementation of the RMS System.

1.24.6.1 Quality Control (QC)/Quality Assurance (QA) Mutual Understanding Meeting

The Contractor shall prepare in outline form, a proposed RMS implementation plan which shall be discussed at the pre-construction conference. Detailed discussions including the Contractor's approved RMS implementation plan shall be made a supplemental part of the Quality Control (QC)/Quality Assurance (QA) mutual understanding meeting. During this supplemental meeting the Government will provide an overview of the RMS system. At a minimum, Contractor personnel responsible for the following shall be in attendance: Contractor Quality Control, Project Schedule, Submittals, Partial Payment

Estimates, Subcontracting, Operation and Maintenance Training, and installed property and equipment.

1.24.6.2 RMS Implementation Plan

At a minimum, the RMS plan shall include the following:

a. A description of the RMS team, including a chart showing lines of authority, duties, and responsibilities.
b. The name, qualifications (in resume format), duties, responsibilities, and authorities of each person assigned a RMS function.
c. Procedures for joint Government/Contractor review and verification of proposed input. This shall include certification from the Contractor that the submitted input is accurate, current, and in strict conformance to all contract requirements.
d. Proposed procedures to ensure compatibility of the existing Government system with the Contractors proposed Hardware and Software.
e. Proposed controls, instructions and procedures to ensure smooth and effective transfer of electronic data.
f. Proposed reporting procedures, including reporting formats, techniques and equipment.

1.24.6.3 Acceptance of Plan

Approval of the Contractor's proposed plan is required prior to the start of construction. Acceptance is conditional and will be predicated on satisfactory performance during the construction. The Government reserves the right to require the Contractor to make changes in his RMS Plan and operations including but not necessarily limited to modifications to hardware, software, and removal of personnel, as necessary, to obtain the quality and efficiency as specified.

1.24.6.4 Notification of Changes

After acceptance of the RMS plan, the Contractor shall notify the Contracting Officer in writing of any proposed change. Proposed changes are subject to acceptance by the Contracting Officer.

1.24.7 Personnel Requirements

The requirements for the RMS organization are a RMS System Manager and sufficient number of additional qualified personnel to ensure contract compliance.

1.24.7.1 RMS Manager

The Contractor shall identify as RMS Manager an individual within the onsite work organization who shall be responsible for overall management of RMS and have the authority to act in all RMS matters for the Contractor. The RMS Manager shall be a graduate engineer, with a minimum of 10 years construction experience. This RMS Manager shall be physically located on-site and shall be employed by the prime Contractor. The RMS Manager shall be assigned as RMS Manager but may have other duties. An alternate for the RMS Manager shall be identified in the plan to serve in the event of the RMS Manager's absence. The requirements for the alternate shall be the same as for the designated RMS Manager.

1.24.7.2 RMS Staff

The Contractor's RMS staff shall maintain a presence at the site at all times during progress of the work and have complete authority and responsibility to take any action necessary to ensure contract compliance. The RMS staff shall be subject to acceptance by the Contracting Officer.

1.24.7.3 RMS Office Facilities and Equipment

The Contractor shall provide adequate office space, computers, and other resources as necessary to maintain an effective and fully functional RMS organization.

1.24.8 Hardware and Software

The Contractor shall submit all of the RMS input data and updates required by the Contractor's Quality Control Module of the Government's Resident Management System (RMS).

For QCS System Hardware and software Requirements, RMS Server Minimum Requirements, and RMS Workstation Minimum Requirements contractor shall obtain information from web site: http://www.rmssupport.com/rmswebhome.aspx State of the Art Anti-Virus Software: The Contractor's computer software system shall be protected by a State-of-the-Art Anti-Virus protection system which shall be maintained and upgraded with all issued manufacturer's updates throughout the life of the contract period.

1.24.9 Notification of Noncompliance

The Contracting Officer will notify the Contractor of any detected noncompliance with the requirements of this clause. The Contractor shall take immediate corrective action after receipt of such notice. Such notice, when delivered to the Contractor at the work site, shall be deemed sufficient for the purpose of notification. If the Contractor fails or refuses to comply promptly, the Contracting Officer may issue an order stopping all or part of the work until satisfactory corrective action has been taken. No part of the time lost due to such stop orders shall be made the subject of claim for extension of time or for excess costs or damages by the Contractor.

1.24.10 Contractor Partial Payment Estimates

The RMS System shall be used for preparing, approving, and printing the Contractors partial payment estimate.

1.24.10.1 Monthly Coordination Meeting

The RMS System shall be completely updated at least monthly. Specific calendar dates for submission of same shall be determined by the Contracting Officer. Prior to submitting a partial payment estimate, the Contractor shall schedule a coordination meeting with the Government to verify the status of activities proposed for payment. This meeting shall evaluate at a minimum the following:

a. Activities proposed for payment.
b. Total dollar value and previous earnings of each activity proposed for payment.
c. Percent or quantity proposed for payment by the Contractor.
d. Percent or quantity approved for payment by the Government.
e. Verification of activities started, on-going, or completed.
f. Verification that required "Three Phase-Inspections" have been conducted satisfactorily.

g. Verification that all Accident Prevention/Safety and Construction deficiencies have been noted and corrected to the satisfaction of the Contracting Officer.

h. Verification that there are no outstanding submittals.
i. Verification that CQC testing has been performed.
j. Verification that a daily record of as-built conditions is being maintained.
k. Verification that salvage material has been turned over.
l. Verification that Government furnished property has been transferred.
m. Verification that Contractor Requests for Information (RFI's) have been submitted.
n. Verification that installed property and equipment information is current in RMS. The RMS database shall include all information on the property and equipment at the time of installation of each item.
o. Verification of other required items as noted on the approved RMS Implementation Plan.

1.24.10.2 Re-submission of Partial Payment Estimates

Prior to requesting a partial payment estimate, the Contractor is required to submit and receive approval, for all elements of the RMS that require updating. In the event that any data is missing, unavailable, incorrect, or determined by the Contracting Officer to portray unrealistic parameters or misrepresent actual conditions, the Contracting Officer may require the Contractor to correct, revise and resubmit the required RMS input or status information, prior to accepting any partial payment estimate for evaluation. Any payment amount previously paid on the basis of inaccurate or incorrect information submitted by the Contractor, may be adjusted by the Contracting Officer in subsequent payment estimates. If the Contractor fails to submit the required updates, or transfers the information in a fragmented or piecemeal fashion, the Contracting Officer may, in addition to other remedies provided under this contract, withhold approval of all or any portion of the partial payment estimate until a complete RMS update has been provided and approved.

1.25 PREPARATION OF AS-BUILT DRAWINGS (CONTRACTOR)

1.25.1 General

Upon completion of each facility under this contract, the Contractor shall prepare and furnish both as-built drawings and Geospatial shapefiles to the Contracting Officer. The as-built drawings shall be a record of the construction as installed and completed by the Contractor. They shall include all the information shown on the contract set of drawings, and all deviations, modifications, or changes from those drawings, however minor, which were incorporated in the work, including all additional work not appearing on the contract drawings, and all changes which are made after any final inspection of the contract work. In the event the Contractor accomplished additional work which changes the as-built conditions of the facility after submission of the final as-built drawings, the Contractor shall furnish revised and/or additional drawings and drawing files as required to depict final as-built conditions. The requirements for these additional drawings shall be the same as for the as-built drawings specified in this paragraph. Additionally all site improvements shown on the site drawings and site utilities shall be provided in ESRI ArcGIS 9.2 Geospatial shape files using Universal Transverse Mercator (UTM) coordinate system.

1.25.2 Daily Record of As-Built Conditions

1.25.2.1 General

The Contractor shall maintain a full size set of contract drawings for depicting a daily record of as-built conditions. These drawings shall be maintained in a current, reproducible condition at all times during the entire contract period and shall be readily available for review by the Contracting Officer's Representative at all times. The as-built drawings shall be updated daily by the Contractor showing all changes from the contract plans which are made in the work, or additional information which might be uncovered in the course of construction. This information shall be recorded on the prints accurately and neatly by means of details and notes. Changes and additional information marked on the contract plans should be made in red or green color for highlighting purposes.

1.25.2.3 Daily Record of As-Builts

The daily record of As-Built conditions shall include but not necessarily be limited to the following:

a. All necessary information for As-Built conditions including proprietary materials, equipment, system, and patented processes, shall be transferred from the appropriate shop drawings and digitally incorporated into the As-Built drawings in the Computer Assisted Design and Drafting (CADD) format specified by this clause. Under NO circumstances will shop drawings and submittals approved by the Government be used to supplant and/or supplement the requirements of this clause. As-Built drawings that substitute shop drawings/submittals for original CADD files will be returned for resubmission.

b. The location and description of any utility lines or other installations of any kind or description known to exist within the construction area. The location includes dimensions to permanent features.

c. The location and dimensions of any changes within the building or structure, and the accurate location and dimension of all underground utilities and facilities.

d. Correct grade or alignment of roads, structures, or utilities if any changes were made from contract plans.

e. Correct elevations if changes were made in site grading.

f. Changes in details of design or additional information obtained from working drawings specified to be prepared and/or furnished by the Contractor including but not limited to fabrication, erection, installation plans and placing details, pipe sizes, insulation material, dimensions of equipment foundations, etc.

g. The topography and grades of all drainage installed or affected as part of the project construction.

h. All changes or modifications of the original design including those which result from the final inspection.

i. Where contract drawings or specifications allow options, only the option actually used in the construction shall be shown on the as-built drawings. The option not used shall be deleted.

1.25.3 Computer Assisted Design and Drafting (CADD) Software

Digital As-Built drawing files shall be prepared in the format native to the latest version in common use of AutoCad COMPUTER ASSISTED DESIGN AND DRAFTING (CADD) software. Geospatial shape files shall be provided using ESRI ArcGIS 9.2. The shape files shall be compliant with the Spatial Data Standards for Facilities, Infrastructure and Environment (SDFSIE) Release 2.600. The

standards are available at
http://www.sdsfie.org/SDSFIEHome/tabid/36/Default.aspx.

1.25.4 Translated or Converted Files - Drawing Files

Under NO circumstances shall the Contractor translate (or convert) the digital As-Built files from one CADD software program to another (e.g., from Bently MicroStation to Autocad). As-Built drawings that show signs of translation or conversion will be returned for resubmission.

1.25.5 Geospatial Shape Files and Data

All geospatial data shall overlay on the as-built drawings. The contractor shall utilize a topology build and clean routine and assure the following:

a. No erroneous overshoots, undershoots, dangles or intersections in the line work.
b. Lines should all be continuous, i.e. do not create dashed lines with many small line segments.
c. Point features should be digitized as points, not graticules, symbols or icons
d. No sliver polygons.
e. All polygons completely close and have a single unique centroid
f. Digital representation of the common boundaries for all graphic features must be coincident, regardless of feature layer.
g. Feature Attributes: The contractor shall identify the classification, type, location, ID number, and any other necessary attributes (specified by the Government) for all features.
h. Metadata: The contractor shall complete all metadata elements marked mandatory and mandatory-if-applicable as defined by the FGDC Content Standards for Digital Geospatial Metadata for each feature layer collected. This standards document can be found at:
http://www.fgdc.gov/standards/standards_publications.

1.25.6 Preliminary As-Built Drawings Submission

Two (2) copies of the preliminary as-built marked prints and prints of the Geospatial shape files shall be delivered to the Contracting Officer at the time of final inspection of each facility for review and approval. Changes and additional information marked on the contract plans should be made in red or green color for highlighting purposes. If upon review of the preliminary as-built drawings and Geospatial shape files, errors or omissions are found, the drawings will be returned to the Contractor for corrections. The Contractor shall complete the corrections in red or green color, and return the as-built marked prints and Geospatial shape files marked prints to the Contracting Officer within ten (10) calendar days.

1.25.7 Final As-Built Drawings Submission

The Contractor shall update the digital contract drawing files and Geospatial shape files to reflect the approved final as-built conditions and shall furnish those updated drawing files and plots of the final as-built drawings and Geospatial shape files to the Contracting Officer.

a. Only personnel proficient in the use of Computer Assisted Design and Drafting (CADD) for the preparation of drawings shall be employed to modify the contract drawing files or prepare new drawing files. Only personnel proficient in the use of ESRI ArcGIS 9.2 and the standards listed in SDFSIE shall be employed to create or modify the Geospatial shape files.

b. Existing digital drawing files shall be updated to reflect as-built conditions. Independent drawing files containing only as-built information are not acceptable. The modifications shall be made by additions and deletions to the original drawing files, and where additional drawings are necessary, they shall be developed in individual digital files for each new drawing. All additions and corrections to the contract drawing files shall be clear and legible, and shall match the adjacent existing line work and text in type, size, weight, and style. New or revised information placed into the design files shall be placed on the levels and in the colors used for placement of the corresponding initial data. Similarly, the drawing size, title block, and general format of new drawings shall be consistent with the format established by the original drawings.

c. In the preparation of as-built drawings, the Contractor shall remove "Bubbles" used by the Government to highlight drawing changes made during design/construction. Triangles associated with those earlier drawing changes shall be left on the drawings and the Contractor shall not add triangles to designate modifications associated with representation of the as-built condition. The revision block identification of the drawing modifications shall be left intact and the date of completion and the words "REVISED AS-BUILT" shall be placed in the revision block above the latest existing notation. Each drawing shall have the words "DRAWING OF WORK AS-BUILT" in letters 4.5 mm (3/16") high placed below the drawing title portion of the drawing title block; between the border and the trim line.

d. The Contractor shall check all final as-built drawing files for accuracy, conformance to the initial drawing scheme and the above instructions. The Contracting Officer will review the drawings and drawing files for conformance to these standards.

e. Digital drawing files shall be furnished to the Contracting Officer on CD-ROM or other media and format as approved by the Contracting Officer. A transmittal sheet containing the name of the files, the date of creation, the CD-ROM number, and a short description of the contents, shall accompany the CD-ROM.

f. A sample drawing drawing of the as-builts and Geospatial shape files shall be furnished to the Contracting Officer before delivery of final as-built drawings as a test to demonstrate compliance with the above instructions and file format compatibility with the described CADD and Geospatial software and the standards listed in SDFSIE.

g. Five (5) complete sets of both the updated final Record Copy digital drawing files and Geospatial shape files and three (3) paper plots or copies of both the final Record drawings and Geospatial shape files prints shall be delivered to the Contracting Officer within 30 calendar days of approval of the preliminary as-built drawings and Geospatial shape files prints. If upon review of the final as-built drawings and Geospatial shape files, errors or omissions are found, the drawings, Geospatial shape files and drawing files will be returned to the Contractor for corrections. The Contractor shall complete the corrections and return both the digital files and Geospatial shape files and both the as-built prints and Geospatial shape files prints to the Contracting Officer within ten (10) calendar days.

1.26 NOT USED

1.27 CERTIFICATES OF COMPLIANCE

Any certificates required for demonstrating proof of compliance of materials with specification requirements shall be executed in accordance with Section 01 33 00 SUBMITTAL PROCEDURES. Each certificate shall be signed by an official authorized to certify in behalf of the manufacturing company involved and shall contain the name and address of the Contractor, the project name and location, description and the quantity of the items involved, and date or dates of shipment or delivery to which the certificates apply. Copies of laboratory test reports submitted with certificates shall contain the name and address of the testing laboratory and the date or dates of the tests to which the report applies. Certification shall not be construed as relieving the Contractor from furnishing satisfactory material.

1.28 ACCIDENT PREVENTION

The Contractor shall comply with all applicable Host Country laws and with such additional measures as the Contracting Officer may find necessary in accordance with CONTRACT CLAUSE 52.236-13 entitled ACCIDENT PREVENTION (NOV1991)-ALTERNATE 1 (APR 1984). Applicable provisions of the Corps of Engineers manual entitled Safety and Health Requirements Manual EM 385-1-1 will be applied to all work under this contract. The referenced manual may be obtained from the Contracting Officer at the jobsite or from the Afghanistan Engineer District at Kabul, Afghanistan.

1.28.1 Accident Prevention Program

Within fifteen (15) calendar days after Notice to Proceed, and at least ten (10) days prior to the accident prevention conference, four (4) copies of the Accident Prevention Plan required by the CONTRACT CLAUSE 52.236-13 entitled ACCIDENT PREVENTION (NOV 1991)- ALTERNATE I shall be submitted for review by the Contracting Officer. The APP shall meet the requirements listed in Appendix "A" of EM385-1-1. The Activity Hazard Analysis is a method in which those hazards likely to cause a serious injury or fatality are analyzed for each phase of operations. Corrective action is planned in advance, which will eliminate the hazards. An analysis is required for each new phase of work. On large or complex jobs the first phase may be presented in detail with the submittal of the Accident Prevention Plan rather than presenting the complete analysis. If the plan is to be presented in phases, a proposed outline for future phases must be submitted as a part of the initial Accident Prevention Plan submittal. Accident Prevention Plans will be reviewed for timeliness and adequacy at least monthly with a signature sheet signed and dated documenting that these reviews took place. Copy of company policy statement of Accident Prevention and any other guidance as required by EM 385-1-1, Appendix A.

1.28.2 Ground Fault Circuit Interrupter (GFCI) Requirement - Overseas Construction

The Corps of Engineers Health and Safety Manual, EM 385-1-1, section 11.C.05.a. states: "The GFCI device shall be calibrated to trip within the threshold values of 5 ma +/- 1 ma as specified in Underwriters Laboratory (UL) Standard 943." A variance from USACE has been granted allowing 10 ma, in lieu of 5 ma, for overseas activities that use 220 Volts (V)/50 hertz (Hz) electrical power.

1.28.3 Temporary Power - Electrical Distribution Boxes

EM 385-1-1 section 11.A.01.a. states, "All electrical wiring and equipment shall be a type listed by a nationally recognized testing laboratory for the specific application for which it is to be used." This includes temporary electrical distribution boxes. Locally manufactured electrical boxes will not

be allowed. Only manufactured electrical distribution boxes that meet the European CE requirements, with 10 ma CE type GFCIs installed shall be allowed.

Contractors shall:

a. Make no modifications that might void any CE or manufacturer certification.
b. Test the installed systems to demonstrate that they operate properly and provide the 10 ma earth leakage protection.
c. Ensure GFCIs will have an integral push-to-test function. The testing shall be performed on a regular basis.
d. Check that proper grounding is checked regularly and flexible cords, connectors, and sockets inspected before each use.

1.29 HAZARDOUS MATERIALS

Should the Contractor encounter asbestos or other hazardous materials, during the construction period of this contract, he shall immediately stop all work activities in the area where the hazardous material is discovered. The Contractor shall then notify the Contracting Officer; identify the area of danger; and not proceed with work in that area until given approval from the Contracting Officer to continue work activities. Hazardous material is considered to be asbestos, explosive devices, toxic waste, or material hazardous to health and safety. The Contractor shall secure the area from daily traffic until it is safe to resume normal activities.

1.30 NOT USED

1.31 NOT USED

1.32 NOT USED

1.33 OPERATION AND MAINTENANCE (O&M) DATA

1.33.1 General

The requirements contained herein are in addition to all shop drawings submission requirements stated in other sections of the specifications. The Contractor shall include the provisions for all items required under this clause in all purchase orders and sub-contract agreements. Submittals required hereinafter will not relieve the Contractor of any responsibilities under the Warranty of Construction Provisions of this contract or under the various Guarantee Clauses of the Technical Provisions.

1.33.2 Submittals

The Contractor shall submit all items requiring submission of O&M data under this and other sections of these specifications in accordance with Section 01 33 00 SUBMITTAL PROCEDURES of the specifications.

1.33.3 Operation and Maintenance (O&M) Data

The Contractor shall furnish operation and maintenance manuals for all facilities constructed under this contract. The manuals shall be loose leaf, indexed and shall consist of manufacturer's brochures, manufacturer's operation and maintenance manuals, service and repair manuals, catalogs, service bulletins, instruction charts, diagrams, other information as necessary to support the operation and maintenance of the end items of

equipment, assemblies and systems. Each type of facility (housing, barracks, mosque, etc.) shall be covered by a separate manual (or manuals) consisting of all data pertaining to the equipment and/or systems within that facility. Identical equipment within a single major system shall require only one submittal of data. The Contractor shall furnish all O&M manuals to the Contracting Officer not less than thirty (30) calendar days prior to contract completion. Required number of submittals (number of sets) shall be as specified in Section 01 33 00 SUBMITTAL PROCEDURES.

1.33.4 Recommend Spare Parts List

The Contractor shall furnish a recommended spare parts list containing equipment manufacturers' recommendations for five (5) years; two (2) years and one (1) year spare parts stock levels in Afghanistan. Current unit price and effective date, lead time, shelf life for each individual part, and total cost of all recommended parts shall be furnished.

1.33.5 Supplemental Submittals of Data

After initial submittal of O&M manuals and until final acceptance of all equipment, the Contractor shall prepare and deliver to the Contracting Officer supplemental technical data as previously described for all changes, modifications, revisions and substitutions to equipment and components. For equipment or systems introduced into the contract under change order, or modified by change order, supplemental data shall be furnished within forty-five (45) calendar days after issuance of the change order. The supplemental data furnished shall be properly prepared and identified for insertion into the O&M manuals.

1.33.6 Framed Instructions for Systems

Approved wiring and control diagrams showing the complete layout of the entire system, including equipment, piping, valves and control sequence, framed under glass or in approved laminated plastic, shall be posted, where applicable, in all mechanical equipment rooms. In addition, detailed operating instructions explaining safe starting and stopping procedures for all systems shall be prepared in typed form along with the inspections required to insure normal safe operations. The instructions shall be framed as specified above for the wiring and control diagrams and posted beside the diagram. Proposed diagrams, instructions, and other sheets shall be submitted for approval prior to posting. Operating instructions shall be posted before acceptance testing of the systems and verified during acceptance testing.

1.33.7 Additional Submittals/Resubmittals

The Contracting Officer reserves the right to determine whether the above specified information, as furnished by the Contractor, is adequate and complete and to require such additional submittals by the Contractor as necessary to insure that adequate information has been furnished to provide the satisfactory operation and maintenance of the various items of equipment and to fulfill the intent of the specifications. Additional submittals or resubmittals supplementing incorrect or incomplete data shall be made within thirty (30) calendar days after receiving notice by the Contracting Officer. All costs arising from these resubmissions shall be borne by the Contractor.

1.34 NOT USED

1.35 NOT USED

1.36 INSTRUCTIONS AND TRAINING FOR OPERATION AND MAINTENANCE

1.36.1 General

The Contractor shall be responsible for the instruction and training of operating and maintenance personnel as specified below and in the Technical Provisions of the specifications. Unless otherwise indicated in the Technical Provisions, operating and maintenance instructions shall be given for a minimum period as follows:

Title	Duration of Training
Electrical Systems	2 Days

1.36.2 Operation and Maintenance Training

The Contractor shall provide competent instructors for training of personnel designated by the Contracting Officer to operate mechanical and electrical building systems and equipment, perform the required preventive maintenance to minimize breakdown, and to perform necessary repairs when malfunction or breakdown of equipment occurs. Such training shall consist of classroom and on-the-equipment training for the period specified, which shall be completed prior to acceptance of a system or equipment, as applicable. The instructor(s) shall have no other duties during the period of training. Classroom instruction shall not exceed fifty percent (50%) of the total training time, with the balance devoted to on-the-equipment demonstration and familiarization. Emphasis will be given to both electrical and mechanical features, in accordance with approved training plans.

1.36.3 Arrangements

The training shall be for not less than the periods of time specified, five (5) days per week, and eight (8) hours per day, subject to review and approval by the Contracting Officer. Each individual training session shall be presented one time only, shall be videotaped in a television system compatible with the local area, and be scheduled in a manner acceptable to the Contracting Officer. At the completion of training, the videotapes shall become the property of the Government. In addition to the Contractor's requirements to video tape each training section, the Government reserves the right to record, in any manner, the subject training material, or training sessions given by the Contractor, without additional cost to the Government. Recordings obtained will be used in future training by the Government. The operating and maintenance manual data, as specified to be furnished in these Special Clauses, shall be used as the base material for training.

1.36.4 Scheduling

The Contractor shall contact the Contracting Officer for the purpose of preliminary planning, scheduling, and coordination of training, to maximize effectiveness of the training program for available operating and maintenance personnel. The Contractor shall initiate and make arrangements for such contact within thirty (30) calendar days after receipt of notification of award of contract; and shall include all significant times in scheduling and completing training in his PROJECT SCHEDULE. The Contractor shall provide a draft outline of training outline in sufficient detail to provide a broad indication of the type of scope of training to be given. It shall include but not be limited to; (a) a list of subjects to be presented; (b) estimated amounts of classroom and on-the-equipment instruction for each subject; (c) a list of minimum qualifications for instructors; and (d) discussions

concerning the types and amounts of visual aids, reference materials, tools and test equipment, mock-up and other training materials that will be employed during training.

1.36.5 Preliminary Plan

The Contractor shall submit seven (7) copies of an outline of his proposed training plan to the Contracting Officer for review and approval not later than 60 calendar days after Notice to Proceed. The plan will be reviewed and coordinated with the content of the O&M manuals.

1.36.6 Plan

The Contractor shall submit seven (7) copies of his proposed training plan to the Contracting Officer for approval not later than ninety (90) calendar days prior to start of any training. The plan shall include the following; (a) a weekly outline showing overall form and design of training presentation; (b) a day-by-day schedule showing time intervals, the major and subordinate subjects to be covered in each, the name of the instructor(s) and qualification summary of each, and identification of related handouts; (c) summary of the number of hours of classroom and on-the-equipment training; (d) a list of reference materials to be provided by the Contractor to the trainees; and (e) a list and description of the training materials to be used, such as text, visual aids, mock-up, tools, etc. The Contractor shall be responsible for furnishing all training materials except the following: The Government will provide space, chairs, and tables for classroom training, and three (3) sets of the five (5) sets of O&M Manuals required by the Contractor per Section 01 33 00 SUBMITTAL PROCEDURES of the specifications. Provision of these manuals is solely for reference purposes, and in no way relieves the Contractor from providing all instruction and materials necessary for training personnel designated by the Government. All costs for resubmission of training plans, training materials, etc., as requested by the Contracting Officer shall be borne by the Contractor. Resubmittals shall be made within twenty (20) days of notice from the Contracting Officer.

1.36.7 Attendance Roster/MED Form 356

The Contractor shall develop an attendance roster or a similar document indicating each student's attendance, prior to the start of each class, subject and/or topic. This includes both "Hands-On" and classroom training. It is strongly recommended that each student trained be required to sign this document at the beginning of each class day for each and every class, subject and/or topic taught on that day. The Contractor's failure to have student attendance verified in writing may be cause for the Government to order the Contractor to repeat schooling where evidence of attendance cannot be verified. No part of the time lost due to such repeat instruction shall be made the subject of claim for extension of time or for excess costs or damage by the Contractor. Within ten (10) working days after completion of Operation and Maintenance Training conducted in accordance with this clause and/or applicable Technical Provision section, the Contractor shall complete and submit MED Form 356 "Operation and Maintenance Training Validation Certificate". The attendance roster shall be included as an attachment to MED Form 356.

1.37 NOT USED

1.38 NOT USED

1.39 NOT USED

1.40 NOT USED

1.41 NOT USED

1.42 TIME EXTENSIONS FOR UNUSUALLY SEVERE WEATHER

1.42.1 General

This provision specifies the procedure for determination of time extensions for unusually severe weather in accordance with the Contract Clause 52.249-10 entitled DEFAULT (FIXED-PRICE CONSTRUCTION) APR 1984. The listing below defines the anticipated monthly unusually severe weather for the contract period and is based on National Oceanic and Atmospheric Administration (NOAA) or similar data for the geographic location of the project. The schedule of anticipated unusually severe weather will constitute the baseline for determining monthly weather time evaluations. Upon award of this contract and continuing throughout the contract each month, actual unusually severe weather days will be recorded on a calendar day basis (including weekends and holidays) and compared to the monthly anticipated unusually severe weather in the schedule below. The term "actual unusually severe weather days" shall include days actually impacted by unusually severe weather. The Contractor's schedule must reflect the anticipated unusually severe weather days on all weather dependent activities.

MONTHLY ANTICIPATED UNUSUALLY SEVERE WEATHER CALENDAR DAYS

January	2 Days
February	2 Days
March	3 Days
April thru December	0 Days

1.42.2 Time Extensions

The number of actual unusually severe weather days shall be calculated chronologically from the first to the last day in each month. Unusually severe weather days must prevent work for fifty percent (50%) or more of the Contractor's workday and delay work critical to the timely completion of the project. If the number of actual unusually severe weather days exceeds the number of days anticipated in the paragraph above, the Contracting Officer will determine whether the Contractor is entitled to a time extension. The Contracting Officer will convert any qualifying delays to calendar days and issue a modification in accordance with the Contract Clause 52.249-10 entitled DEFAULT (FIXED-PRICE CONSTRUCTION) APR 1984.

1.43 NOT USED

1.44 S TANDARDIZATION

Where two or more items of the same type or class of product, system or equipment furnished in this project are required, the units shall be products of the same manufacturer and shall be interchangeable when of the same size, capacity, performance characteristics, and rating. The only exception to this requirement is where the items are interchangeable due to conformance with industry standards (valves, fittings, etc.); they need not be by the same manufacturer. This requirement applies to all manufactured items in the project that normally require repair or replacement during the life of the equipment.

1.45 NOT USED

1.46 NOT USED

1.47 NOT USED

1.48 NOT USED

1.49 COMPLIANCE WITH HOST COUNTRY RULES AND CUSTOMS

The laws of Host Country may prohibit access to certain areas of the country that are under military control. The Contractor shall furnish the Contracting Officer the names of personnel, type, and amounts of equipment, dates and length of time required at the site, and the purpose of entering the host country. It is understood that areas to which rights of entry are provided by the Host Government are to be used only for work carried out under the contract and no destruction or damages shall be caused, except through normal usage, without concurrence of the Host Government.

1.49.1 Contractor's Responsibilities

The following items are the sole responsibility of the Contractor to investigate, estimate as to cost, and assume the risk, as normally encountered by Contractors. The Contractor shall be responsible for determining the effect of the following on his own cost of performance of the contract and for including sufficient amount in the contract price:

a. Official language and type of accounts required to satisfy the officials of the Local Government.

b. Entry and exit visas, residence permits, and residence laws applicable to aliens. This includes any special requirements of the Host Government, including those required by local Labor Offices, which the Contractor may have to fulfill before an application for a regular block of visas will be accepted.

c. Passports, health and immunization certificates, and quarantine clearance.

d. Compliance with local labor and insurance laws, including payment of employer's share of contribution, collecting balance from employee and paying into insurance funds.

e. Strikes, demonstrations and work stoppage.

f. Collection through withholding and payment to local Government, of any Host Country income tax on employees subject to tax.

g. Arranging to perform work in the Host Country, to import personnel, to employ non-indigenous labor, to receive payments and to remove such funds from the country.

h. Operating under local laws, practices, customs and controls, and with local unions, in connection with hiring and firing, mandatory wage scales, vacation pay, severance pay, overtime, holiday pay, 7th day of rest, legal notice or pay in lieu thereof for dismissal of employees, slowdown and curtailed schedules during religious holidays and ratio of local labor employed in comparison to others.

i. Possibility of claims in local bureaus, litigation in local courts, or attachment of local bank accounts.

j. Compliance with workmen's compensation laws and contributions into funds. Provisions of necessary medical service for Contractor employees.

k. Special license required by the local Government for setting up and operating any manufacturing plant in the Host Country, e.g. concrete batching, precast concrete, concrete blocks, etc.

l. Sales within the host country of Contractor-owned materials, and equipment.

m. Special licenses for physicians, mechanics, tradesmen, drivers, etc.

n. Identification and/or registration with local police of imported personnel.

o. Stamp tax on documents, payments and payrolls.

p. Base passes for permanent staff, day laborers, motor vehicles, etc.

q. Compliance with all customs and import rules, regulations and restrictions, including, but not limited to, local purchase requirements.

1.50 NOT USED

1.51 NOT USED

1.52 NOT USED

1.53 IDENTIFICATION OF EMPLOYEE'S PERSONNEL AND VEHICULAR ACCESS TO THE PROJECT SITES

The Base Security is operated by the Dutch and Australians. The Base Security maintains the ultimate authority for establishing, monitoring, and enforcing security requirements for the Base Security Office. All contractor, subcontractor, or vendor personnel and vehicles at any tier working at any location on the Base are subject to a thorough search upon entering, departing, or at any time deemed necessary by the Base Security Personnel. The Contractor shall be responsible for compliance with all the Base security requirements. The Government reserves the right to deny access or to require the contractor to remove any personnel or equipment deemed to be a threat to the security of the Base Security Office or the Base personnel. The Contractor shall work through the Contracting Officer to ensure that the Base Security Regulations are followed.

1.53.1 Employee Identification

The Contractor shall be responsible for furnishing to each employee and for requiring each employee engaged on the work, to display identification as approved and directed by the Contracting Officer. Prescribed identification shall immediately be delivered to the Contracting Officer for cancellation upon release of any employee. When required, the Contractor shall obtain and provide fingerprints of persons employed on the project. Contractor and subcontractor personnel shall wear identifying markings on hard hats clearly identifying the company for whom the employee works.

1.53.1.1 Preparation of Identification Badges

The Contractor shall be required to prepare a written application inclusive color photographs and provide all materials and labor necessary to prepare an identification badge, laminated in plastic, containing the employee's name, badge number, color photo, height and weight, the name of the Contractor's organization and for requiring each employee engaged on the work to display this identification as directed by the Contracting Officer. The Contractor shall submit each application and draft badge through the Contracting Officer to the Base Security Office. A minimum of thirty-five workdays shall be allowed for Government review and certification of badges. The Base Security Office will certify each draft badge by signature, stamp, seal or any combination thereof. Upon certification by the Base Security Office, the badges will be returned to the Contractor for final preparation, lamination, and issuance. Badges shall not be taken out of country during periods of travel or absence. During such periods, the Contractor may be permitted to issue temporary identification badges.

1.53.1.2 Employee Background and Historical Information

The Contractor shall be required to prepare and maintain personal background and historical information forms on each employee. These forms may be reviewed by the Base Security Office. The required information shall include but not necessarily be limited to the following:

a. Full name.
b. Place and date of birth.
c. Three (3) current color photographs.
d. Copy of Citizenship/Nationality identification.
e. Copy of Passport.
f. Copy of driver's license.
g. Police Background Check.
h. Work History.
i. Personal background information.
j. Copy of Work Permit and/or Visa.
k. Permanent home of record and in-country address.
l. Other information mandated by local law, the Base Security Regulations or that may be required to coordinate and process the necessary documentation with the government offices responsible for the approval.
m. Registration, insurance company, policy number and expiration date for each vehicle.

1.53.2 Identification of Contractor Vehicles

The Contractor shall be responsible for requiring each vehicle engaged in the work to display permanent vehicular identification as approved and directed by the Contracting Officer. If acceptable to the Base Security Office and approved by the Contracting Officer, the Contractor may institute a system of non-permanent temporary identification for one-time delivery and transit vehicles. Each Contractor vehicle, machine, piece of equipment, or towed trailers, shall show the Contractor's name such that it is clearly visible on both front doors of the vehicle and both sides of a towed trailer. A valid license plate shall be displayed at all times. Contractor vehicles operated on Government property shall be maintained in a good state of repair, shall be insured, and shall be registered in accordance with Afghan Law.

1.53.3 Security Plan

The Contractor shall submit to the Contracting Officer, within ten (10)

calendar days after Notice to Proceed, his proposed personnel and vehicular access plan. This plan shall cover all elements for issuance of the access passes, safeguarding of unissued passes, construction security operations, lost passes, temporary vehicle passes, and collection of passes for employee's and vehicles on 1)- temporary absence; 2)- termination or release; and 3)- termination or completion of contract. The plan shall address in detail the contractors proposed procedures, and organization necessary to produce and maintain effective security within the contract limits twenty-four (24) hours a day seven (7) days a week.

1.54 ESCORTS

One (1) escort will be provided for every fifteen (15) workers. The Contractor is to inform the Contracting Officer of number of workers and the number of escorts required during construction. Additional escorts may be provided if needed or at the direction of the Contracting Officer.

1.55 ON-BASE PHOTOGRAPHY PROHIBITION
The Contractor shall not engage in any form of photography without prior written approval from the Contracting Officer.

1.56 PUBLIC RELEASE OF INFORMATION

1.56.1 Prohibition

There shall be no public release of information or photographs concerning any aspect of the materials or services relating to this bid, contract, purchase order, or other documents resulting there from without the prior written approval of the Contracting Officer.

1.56.2 Subcontract and Purchase Orders

The Contractor agrees to insert the substance of this clause in all purchase orders and subcontract agreements issued under this contract.

1.57 NOT USED

1.58 NOT USED

1.59 NOT USED

1.60 NOT USED

1.61 NOT USED

1.62 NOT USED

1.63 NOT USED

1.64 NOT USED

1.65 ATTACHMENTS

MED FORM 356 - Operation and Maintenance Training Validation Certificate

-- End of Section --

SECTION TABLE OF CONTENTS

DIVISION 01 - GENERAL REQUIREMENTS

SECTION 01 32 17.00 20

NETWORK ANALYSIS SCHEDULES (NAS)

PART 1 GENERAL

1.1 DESCRIPTION
1.2 SUBMITTALS
1.3 SCHEDULE ACCEPTANCE
1.3.1 Schedule Acceptance Prior to Start of Work
1.3.2 Acceptance
1.4 SOFTWARE
1.5 QUALIFICATIONS
1.6 NETWORK SYSTEM FORMAT
1.6.1 Diagrams
1.6.2 Schedule Activity Properties and Level of Detail
1.6.2.1 Activity Categori
1.6.2.2 Project Milestones
1.6.2.3 Critical Activities
1.6.2.4 Activity Identification (ID) and Description
1.6.2.5 Activity Code Dictionary and Values
1.6.2.6 Cost and Resource Loading
1.6.2.7 Anticipated Weather Delays
1.6.2.8 Schedule Software Settings and Restrictions
1.6.3 Required Tabular Reports
1.7 SUBMISSION AND ACCEPTANCE
1.7.1 Preliminary Meeting
1.7.2 Baseline Network Analysis Schedule
1.7.3 Monthly Network Analysis Updates
1.7.4 Summary Network
1.7.5 AS-BUILT SCHEDULE
1.8 CONTRACT MODIFICATION
1.8.1 Time Impact Analysis:
1.8.2 No Reservation-Of-Rights
1.9 CHANGES TO THE NETWORK ANALYSIS SCHEDULE
1.10 FLOAT
1.10.1 Definition of Float
1.10.2 Ownership of Float
1.10.3 Negative Float
1.11 THREE-WEEK LOOK AHEAD SCHEDULE
1.12 WEEKLY COORDINATION MEETING
1.13 CORRESPONDENCE AND TEST REPORTS

PART 2 PRODUCTS -

PART 3 EXECUTION -

-- End of Section Table of Contents --

SECTION 01 32 17.00 20

NETWORK ANALYSIS SCHEDULES (NAS)

PART 1 GENERAL

1.1 DESCRIPTION

The network analysis system shall consist of the network analysis schedule (diagram) and associated reports. The scheduling of all design and construction shall be the responsibility of the Contractor. All design and construction increments will be interrelated on a single schedule that represents the entire project duration from Contract Award to the Contract Completion Date. Schedule updates will build upon each other and will include all design and construction increments as they are detailed, submitted and accepted. Submission of progress and revision data will be used to measure work progress, aid in the evaluation for requests for time extensions, and to provide the basis of all progress payments. The Critical Path Method (CPM) of network calculation shall be used to generate the project schedule and will utilize the Precedence Diagram Method (PDM) to satisfy both time and cost applications. All progress payment amounts will be derived from and tied to the cost-loaded schedule activities.

For consistency, when scheduling software terminology is used in this specification, the terms in Primavera's scheduling programs are used. Primavera Project Planner, P3, Primavera Project Manager, SureTrak and PrimeContract are registered trademarks or service marks of Primavera Systems, Inc. Adobe and Acrobat are registered trademarks of Adobe Systems Incorporated.

1.2 SUBMITTALS

Government approval is required for submittals with a "G" designation; submittals not having a "G" designation are for information only. When used, a designation following the "G" designation identifies the office that will review the submittal for the Government. Submit the following in accordance with Section 01 33 00 SUBMITTAL PROCEDURES:

SD-01 Preconstruction Submittals

Qualifications; G RE
Project Name format
Standard Activity ID Dictionary; G RE
Baseline Network Analysis Schedule; G RE

SD-07 Certificates

Monthly Network Analysis Updates; G RE
Summary Network; G RE

SD-11 Closeout Submittals

As-Built Schedule; G RE

1.3 SCHEDULE ACCEPTANCE

Review comments made by the Government on the Contractor's schedule(s) will not relieve the Contractor from compliance with requirements of the

Contract Documents. The Contractor is responsible for scheduling, sequencing, and prosecuting the Work to comply with the requirements of the Contract Documents. Government acceptance extends only to the activities of the Contractor's schedule that the Government has been assigned responsibility and agrees it is responsible. The Government will also review for contract imposed schedule constraints and conformance, and cost loading of the CPM activities. Comments offered on other parts of the schedule, which the Contractor is assigned responsibility, are offered as a courtesy and are not conditions of Government acceptance; but are for the general conformance with established industry schedule concepts.

1.3.1 Schedule Acceptance Prior to Start of Work

The Baseline Network Analysis Schedule described in the paragraph entitled "Baseline Network Analysis Schedule" must be submitted and accepted by the Government before the Contractor will be allowed to start work on the construction stage(s) of the contract. Examples of construction stages are, but not limited to; demolition, site work, temporary work for construction, etc.

1.3.2 Acceptance

a. After the "Baseline Network Analysis Schedule" is submitted and accepted by the Contracting Officer, it will then be used by the Contractor for planning, organizing, and directing the work; reporting progress; and requesting payment for work accomplished. The schedule will be updated monthly by the Contractor and submitted monthly with the progress pay request to reflect the current status of the work. Submittal and acceptance of the Baseline Network Analysis Schedule and accurate updated schedules accompanying the pay requests are both conditions precedent to processing pay requests. Only bonds will be paid prior to acceptance of the Baseline Schedule.

b. Submittal of the Baseline Network Analysis Schedule, and subsequent schedule updates, will be understood to be the Contractor's certification that the submitted schedule meets all of the requirements of the Contract Documents, represents the Contractor's plan on how the work will be accomplished, and accurately reflects the work that has been accomplished and how it was sequenced (as-built schedule logic).

1.4 SOFTWARE

The scheduling software that will be utilized by the Government on this project is Primavera Project Planner (P3) by Primavera Systems, Inc.. Notwithstanding any other provision in the contract, schedules submitted for this project must be prepared using either Primavera P3 or Primavera SureTrak (files saved in Concentric P3 format). The Contractor shall provide electronic files saved in a format that is compatible with the Contracting Officer's current software version. Submission of data from another software system where data conversion techniques or software is used to import into Primavera's scheduling software is not acceptable and will be cause for rejection of the submitted schedule.

1.5 QUALIFICATIONS

The Contractor shall designate a part time Scheduler that will be responsible for the development, preparation, and maintenance of an accurate, computerized Network Analysis Schedule. Part time is defined as the Scheduler performing on-site coordination, attending project meetings,

and updates for sixteen (16) hours per work week. The Scheduler shall have previously developed, created and maintained at least two (2) previous computerized schedules of similar size and complexity of this contract. A resume outlining the qualifications of the Scheduler and their P3 or SureTrak training certificate from an authorized Primavera trainer shall be submitted for acceptance to the Contracting Officer. If at a later date, the Contracting Officer considers the Contractor's Scheduler to be incompetent or objectionable, the Contractor will propose a new Scheduler, meeting the qualification requirements. Payments will not be processed until an acceptable Scheduler is provided.

1.6 NETWORK SYSTEM FORMAT

The system shall consist of time scaled logic diagrams and specified reports.

1.6.1 Diagrams

Show the order and interdependence of activities and the sequence in which the work is planned to be accomplished. The basic concept of the network analysis diagram will be followed to show how the start of a given activity is dependent on the completion of preceding activities and how its completion restricts or restrains the start of following activities. Activity durations shall not be resource-driven, activities shall start according to network logic and finish when its duration has elapsed. Diagrams shall be organized by Work Phase, sorted by Early Start Date and will show a continuous flow from left to right with no logic (relationship lines) from right to left. With the exception of the Contract Award, Start Project and End Project milestone activities, no activities will be open-ended; each activity will have predecessor and successor ties. The diagram shall clearly show the activities of the critical path and must be red in color. Once an activity exists on the schedule it may not be deleted or renamed, and must remain in the logic. No more than twenty (20) percent of the activities may be critical or near critical. Critical will be defined as having zero (0) days of Total Float. "Near critical" will be defined as having Total Float in the range of one (1) to fourteen (14) calendar days. Show the following information on the diagrams for each activity:

a. Activity ID
b. Activity Description
c. Original Duration in Work Days
d. Remaining duration
e. Actual Duration in Work Days
f. Early Start Date
g. Early Finish Date
h. Total Float

Provide network diagrams on tabloid (11X17) sheets. Updated diagrams shall show the date of the latest revision.

1.6.2 Schedule Activity Properties and Level of Detail

Numbering shall be assigned so that, in general, predecessor activity numbers are smaller numerically than the successor activity numbers. Skip numbering shall be used on the network to allow insertion of additional activities for contract modifications and logic changes. The minimum number of construction activities in the final network diagram shall be two hundred (200). Activity categories included in the schedule are specified

below.

1.6.2.1 Activity Categories

a. Design and Permit Activities: Requirements for the activities related to design shall be included as separate activities in the project schedule. Design activities shall include, but are not limited to; the Design Notice to Proceed, Contractor's design cost for each facility, Contractor's various stages of design, application for and receipt of permits required, Contractor's constructability reviews, submittal of design packages to Government, Government's design review periods, specified design meetings, transition periods prior to Construction Notice to Proceed, (including Notice to Proceed for each Fast-Track Phased Design as indicated in Section 01 33 00.12 10 SUBMITTAL PROCEDURES FOR DESIGN/BUILD PROJECT and as directed by the Contracting Officer). The Government review period shall be from the time the design is received by the Government to the time it is sent back to the Contractor; mail time will not be included in the Government review period. Design activities will be linked to their associated Procurement and/or Construction activities.

If the Government's action on any submittal requires resubmission or does not clear the design for construction, a new series of Design Activities will be inserted into the schedule. Predecessor for the new design preparation activity will be the original approval activity and the successor of the new activity will be the next design step (in-progress or final) activity.

b. Procurement Activities: Tasks related to the procurement of material or equipment shall be included as separate activities in the project schedule. Examples of procurement activities include, but are not limited to; Material/equipment submittal preparation, submittal and approval of material/equipment; delivery of O&M manuals; material/equipment fabrication and delivery, delivery of extra parts, extra stock, special tools, notification of Government Furnished Material/Equipment delivery requirement, etc. As a minimum, separate procurement activities will be provided for every specification section. If the Contractor intends on using Just-In-Time (JIT) delivery methods, the schedule will show each JIT delivery with relationship tie to the Construction Activity specifically for the JIT delivery. Material and equipment for which payment will be requested in advance of installation shall be cost-loaded with the procurement costs (e.g.; the delivery milestone(s)). All activities within a procurement process/cycle will have a unique identifier in the activity code to show their relationships and will extend to the related construction activities (i.e., CSI Code).

If the Government's action on any submittal is "Disapproved" or "Revise and Resubmit", a new series of Procurement Activities will be inserted into the schedule. Predecessor for the new submittal preparation activity will be the original approval activity and the successor of the new approval activity will be the fabrication/deliver activity for the equipment or material.

c. Government Activities: Government and other agency activities that could impact progress shall be clearly identified. Government activities include, but are not limited to; Government approved submittal reviews, Government conducted inspections/tests, environmental permit approvals by State regulators, utility outages,

Notice(s) to Proceed (including Notices to Proceed for each Fast-Track Phase as indicated in other sections of this specification and as directed by the Contracting Officer) and delivery of Government Furnished Material/Equipment. Show activities indicating Government furnished materials and equipment utilizing delivery dates indicated in "FAR 52.245-2, Government Property (Fixed-Price Contracts)." Government activities will be driven by calendars that reflect all Saturdays, Sundays and all Federal Holidays as non-work days.

d. Construction Quality Management (CQM) Activities: CQM Activities will identify the Preparatory Phase and Initial Phase for each Definable Feature of Work identified in the Contractor's Quality Control Plan. These activities will be added to each Three-Week Look Ahead Schedule referenced in the paragraph entitled "THREE-WEEK LOOK AHEAD SCHEDULE" and will also be included in each monthly update referenced in the paragraph entitled "Monthly Network Analysis Updates". The Follow-up Phase will be represented by the Construction Activities in the Baseline Schedule and in the schedule updates.

e. Construction Activities: Construction activities shall include, but are not limited to: Tasks related to mobilization or demobilization; the installation of temporary or permanent work by tradesman; testing and inspections of installed work by technicians, inspectors or engineers; start-up and testing of equipment; commissioning of building and related systems; scheduling of specified manufacture's representatives; Punch Out Inspection; Pre-Final Inspection, Final Acceptance Inspection; final clean-up; training to be provided; and administrative tasks necessary to start, proceed with, accomplish or finalize the contract. No onsite construction activity shall have a duration in excess of 20 working days. Contractor activities will be driven by calendars that reflect all non-work days.

f. Hammock (Summary) Activities: The Contractor shall include special activities that are a summary of a chain of activities. The start of the activity will be the start date of the first activity in the chain and the finish date will be the finish date of the last activity in the chain. Generalized work sequences, Area Codes and Phase Codes will be summarized.

1.6.2.2 Project Milestones

Dates shall be shown on the diagram for the start of the project, any contract required interim start and completion dates, contract completion date and other significant milestones.

a. Project Start Date Milestones: The schedule shall start no earlier than the Contract Award Date and the project duration (Day 1) will start on the Notice-to-Proceed (NTP) date. The Contractor shall include as the first milestone in the schedule, an activity named "Contract Award". Another milestone shall be included that will be named "Start Project". The Contract Award and Project Start milestones shall have mandatory start constraint dates equal to the Contract Award and NTP dates, respectively.

b. Constraint of Last Activity Milestone: The Contractor shall include as the last activity in the project schedule, an activity named "End Project". The "End Project" activity shall have a mandatory finish constraint equal to the contract completion date for the project. Calculation of project updates shall be such that if the

finish of the last activity falls after the contract completion date, then the float calculation shall reflect negative float on the critical path and if the finish of the last activity falls before the contract completion date, the float calculation shall reflect positive float on the critical path.

c. Early Project Completion: In the event the Contractor's project schedule shows completion of the project prior to the contract completion date, the Contractor shall include an activity named "Contractor Early Completion". The activity shall be a milestone with an unconstrained date representing the Contractor's Early Completion date. The only successor activity to this activity will be the "End Project" milestone.

d. Substantial Completion: If the Contractor elects to include an activity for Substantial Completion, then it is agreed that Substantial Completion will be the point in time that the Government considers the project is complete and ready for its intended use. The activity will be named "Substantial Completion". The activity shall be a milestone with an unconstrained date representing the Contractor's Substantial Completion date. The only successor activity to this activity will be the "End Project" milestone.

e. Phase Start Milestone: The Contractor shall include as the first activity for a project phase, an activity named "Start Phase X", where "X" identifies the phase of work. The "Start Phase X" activity shall have an unconstrained start date equal to the date of the Phase NTP. This unconstrained start date is not a release from contractually required start dates, but is left unconstrained to allow the schedule logic to calculate without hindrance.

f. End Phase Milestone: The Contractor shall include as the last activity in a project phase, an activity named "End Phase X" where "X" identifies the phase of work. The "End Phase X" activity shall have an unconstrained late finish date equal to the contract phase completion date. This unconstrained completion date is not a release from contractually required finish dates, but is left unconstrained to allow the schedule logic to calculate without hindrance.

g. Early Phase Completion: If the Contractor expects to finish prior to the contract phase completion date, the milestone will show an early finish date equal to the Contractor's early finish date. The name of the activity will be "Early Phase Completion" and will have an unconstrained date representing the Contractor's early phase completion date.

1.6.2.3 Critical Activities

The following activities, when applicable, shall be listed as separate line activities on the Contractor's project schedule:

a. Submission and approval of mechanical / electrical layout drawings.
b. Submission and approval of O&M manuals.
c. Submission and approval of as-built drawings.
d. Submission and approval of 1354 data and installed equipment lists.
e. Submission and approval of testing and air balance (TAB).
f. Submission of TAB specialist design review support.
g. Submission and approval of fire protection specialist.
h. Submission and approval of testing and balancing of HVAC

plus commissioning plans and data.
i. Air and water balance dates.
j. HVAC commissioning dates.
k. Controls testing plans.
l. Controls testing.
m. Performance Verification testing.
n. Other systems testing, if required
o. Pre-final Inspection
p. Correction of Punch List from Pre-final Inspection
q. Final Inspection

1.6.2.4 Activity Identification (ID) and Description

a. Standard Activity ID Dictionary: The Contractor shall submit the alphanumeric coding scheme for Schedule Activity Numbers that shall be used throughout the project. The coding scheme submitted shall list the values for each activity code and translate those values into project specific designations. Code length shall not exceed ten (10) characters. Once accepted, the coding scheme will be used for the duration of the project.

b. Activity Description: Each activity shall have a narrative description consisting of a Verb or work function (e.g.; form, pour, excavate), an Object (e.g.; slab, footing, under floor plumbing), and Area (e.g.; 3rd floor, northeast quadrant, basement).

1.6.2.5 Activity Code Dictionary and Values

The Contractor shall use the activity coding structure defined in the Standard Data Exchange Formant (SDEF) in ER-1-1-11, Appendix A. This exact structure is mandatory, even if some fields are not used. The codes will have values assigned that will allow the scheduling program to sort, select, group and organize the activities in the schedule.

Data Disks two (2) data disks containing the project schedule shall be provided. Data on the disks shall adhere to the SDEF format specified in the ER-1-1-11, Appendix A.

1.6.2.6 Cost and Resource Loading

a. Cost Loading Activities: Equipment costs will be assigned to their respective Procurement Activities (i.e., the delivery milestone activity). Costs for installation of the material/equipment (labor, construction equipment, and temporary materials) will be assigned to their respective Construction Activities. Cost is not to be assigned to Hammock (Summary) activities. The value of inspection/testing activities will not be less than ten (10) percent of the total costs for Procurement and Construction Activities. Evenly disperse overhead and profit to each activity over the duration of the project. The total of all cost loaded activities; including costs for material and equipment delivered for installation on the project, and labor and construction equipment loaded construction activities, shall total to one hundred (100) percent of the value of the contract.

b. Quantities and Units of Measure: Each cost loaded activity will have a detailed breakdown of the contract price, giving quantities for each of the various kinds of work, unit prices, etc.

c. Labor Resource Loading: As part of the Baseline Schedule

development each construction activity shall have an estimate of the number of workers per day by trade, hours per day by trade and total expected hours used by trade during the execution of the activity. If no workers are required for an activity, then the activity shall be identified as using zero (0) workers per day. All labor resources loaded into the schedule shall be non-driving and will not be used to calculate activity cost or duration. Resource leveling shall not be used. Actual labor resource expended on an activity will be recorded in the monthly updated schedules and will coincide with entries made in the Daily Reports.

d. Equipment Resource loading: As part of the Baseline Schedule development each construction activity shall have an estimate of the equipment used per day, number of units per day and total expected hours for each piece of equipment used during the duration of the activity. Include a description of the major items of construction equipment planned for each construction activity on the project. The description shall include the year, make, model, and capacity. If no equipment is required for an activity, then the activity shall be identified as using zero (0) equipment per day. All equipment resources loaded into the schedule shall be non-driving and will not be used to calculate activity cost or duration. Resource leveling shall not be used. Actual equipment resource expended on an activity will be recorded in the monthly updated schedules and will coincide with entries made in the Daily Reports.

1.6.2.7 Anticipated Weather Delays

Schedule activity duration(s) shall be formulated with allowance for normal adverse weather conditions as shown in Section 01 31 13.12 10 SPECIAL CLAUSES, SC 1.42. Any activity duration, which could be impacted by normally anticipated adverse weather (precipitation, high or low temperature, wind, etc.), due to the time period that the Contractor has scheduled the work, shall include an adjustment to include the anticipated weather delay. The number of anticipated adverse weather delays allocated to an activity will be reflected in the activity's calendar. A lost workday, due to weather conditions, is defined as a day in which the Contractor's workforce cannot work fifty (50) percent or more of the day on the impacted activity(s). The Contractor shall immediately notify the Contracting Officer when a lost day has occurred due to weather, will record on the Daily Reports the occurrence of adverse weather and resultant impact to the normally scheduled work. If the number of actual adverse weather delay days exceeds the number of days anticipated, the Contracting Officer will convert any qualifying delays to calendar days, giving full consideration for equivalent fair weather work days and issue a modification in accordance with the contract clauses.

1.6.2.8 Schedule Software Settings and Restrictions

a. Activity Constraints: Date/time constraint(s), other than those required by the contract, will not be allowed unless accepted by the Contracting Officer. Contractor will identify any constraints proposed and provide an explanation for the purpose of the constraint in the Narrative Report.

b. Lags: Lags will not be used when the creation of an activity will perform the same function (e.g., concrete cure time). Lag durations contained in the project schedule shall not have a negative value. Contractor will identify any lag proposed and provide an explanation

for the purpose of the lag in the Narrative Report.

c. Default Progress Data Disallowed: Actual Start and Finish dates shall not be automatically updated by default mechanisms that may be included in the CPM scheduling software system. Actual Start and Actual Finish dates on the CPM schedule shall match the dates provided from Contractor Quality Control and Production Reports. These reports will be the sole basis for updating the schedule. Work activities will be updated by actual work progression rather than being cash flow driven. Actual labor and equipment hours used on activities will be derived from the Daily Reports.

d. Software Settings: If the contractor chooses to use Primavera's SureTrak software, the Autocost Rules shall be set to:

1) Uncheck - Link Remaining Duration and Schedule Percent Complete;
2) Check - Use Updated Percent Complete Against Budget to Estimate Actual to Date;
3) Check - Freeze Resource Units per Hour When Quantities Change;
4) Check - Update Cost and Revenue Information; and,
5) Set Resource Data to "Two (2) decimal places".

If the contractor chooses to use Primavera's P3 software, the AutoCost rules shall be set as shown below, all others shall be deactivated (i.e.; check boxes and radio buttons not filled in):

1) Use the update percent complete against budget to estimate: Actual cost to date.
2) Link budget and EAC for non-progressed activities: Budget-EAC.
3) Perform these calculations during each schedule computation: Apply these rules when moving from one Resource to another.

Schedule calculations (if applicable) shall be handled through Retained Logic, not Progress Override. All activity durations and float values will be shown in days, time will not be shown in the duration display. Activity progress will be shown using Remaining Duration. Date format will be DDMMMYY (i.e., 11DEC02). Default activity type will be set to "Task".

e. Out-of-Sequence Progress: Activities that have posted progress without all preceding logic being satisfied (Out-of-Sequence Progress) will be allowed only on a case-by-case approval of the Contracting Officer. The Contractor shall propose logic corrections to eliminate all out-of-sequence progress or justify not changing the sequencing for approval prior to submitting an updated project schedule.

1.6.3 Required Tabular Reports

The following reports will be based on the information in the paragraph entitled "Diagrams" and included with the schedule submittals and in each updated schedule submission provided on disk by the Contractor:

a. Earned Value Report: Listing all activities having a budget amount and cost. A compilation of total earnings on the project from the notice to proceed to the most recent monthly progress payment request

and the difference between the previous request amount and the current payment request amount. Sort report first by resource and then by activity.

b. Log Report: With each updated schedule submission, provide a computer generated Log Report using a recognized schedule comparison software listing all changes made between the previous schedule and current updated schedule. Identify the name of the previous schedule and name of the current schedule being compared. This report will as a minimum show changes for: Added & Deleted Activities, Original Durations, Remaining Durations, Activity Percent Complete, Total Float, Free Float, Calendars, Descriptions, Constraints (added, deleted or changed), Actual Starts/Finishes, Added/Deleted Resources, Resource Quantities, Costs, Resource Percents, Added/Deleted Relations, Changed Relation Lags, Changed Driving Relations, and Changed Critical Status.

c. Activity ID Report: By activity number in ascending order showing the current status of all activities.

d. Total Float Report: List of all activities by total float in ascending order and then in order of early start date.

e. Early Start Report: By earliest allowable start dates and then in order of activity number.

f. 30-Day Look Ahead: Activities in progress or scheduled to start or finish within the next thirty (30) calendar days of the project Data Date or is continuing through the thirty (30) day period.

g. Predecessor/Successor Report: By activity number from lowest to highest, showing preceding and succeeding activity numbers for each activity and showing the current status of each activity.

h. Labor Staffing Report and Histogram: With each Baseline Network Analysis Schedule submittal and each updated schedule, a planned early and planned late versus actual labor resource report and histogram will be provided. The report and histogram shall be based upon and shall be in agreement with, the number of shifts and crew sizes by craft, in the Baseline Network Analysis Schedule (planned) and the Monthly Network Update (actual). Included in the report will be a tabular listing of each trade that worked on the activities during the construction period.

i. Equipment Usage Report and Histogram: With each Baseline Network Analysis Schedule submittal and each updated schedule, a planned early and planned late versus actual equipment resource report and histogram will be provided. The report and histogram shall be based upon and shall be in agreement with the equipment allocation in the Baseline Network Analysis Schedule (planned) and the Monthly Network Update (actual). Included in the report will be a tabular listing of equipment (by year, make and model) that worked on the activities during the construction period.

1.7 SUBMISSION AND ACCEPTANCE

1.7.1 Preliminary Meeting

Prior to the preparation of the Baseline Network Analysis Schedule for acceptance; the Contracting Officer, Contractor and the scheduler shall participate in a preliminary meeting to discuss the proposed schedule and

requirements of this section prior to submission of the network.

1.7.2 Baseline Network Analysis Schedule

For the initial submission provide three (3) copies of the diagrams described in the paragraph entitled "Diagrams" and reports listed in the paragraph entitled "Required Tabular Reports". As part of this initial submission, provide the Project Name format (and Project Group Name if used) that will be used by the Contractor to identify the initial schedule submittals, updates, fragnets, changes, etc. The project schedule will also be posted in the format specified as and Adobe PDF file with no relationship lines displayed in the graphic. Include one (1) copy of the Baseline Network Analysis Schedule on electronic media that is acceptable to the Contracting Officer. After the Government's review(s) of the Baseline Network Analysis Schedule, the Contractor shall meet with the Contracting Officer to discuss the review and evaluation of the NAS submittal. Revisions necessary as a result of this review shall be resubmitted for acceptance within ten (10) calendar days after the meeting.

Once review comments are resolved and the Contracting Officer has accepted the Baseline Network Analysis Schedule, the contractor shall within five (5) calendar days furnish:

a. Two (2) copies of the network diagrams.

b. Two (2) copies of the reports listed in the paragraph entitled "Required Tabular Reports".

c. Two (2) copies of the Cash Flow S-Curve indicating the cash flow based upon both the projected early and late finish dates.

d. Two (2) sets of data disks containing the project schedule shall be provided for the initial submission and every periodic project update. The project schedule will also be posted in the format specified as the Adobe PDF file with no relationship lines displayed in the graphic. Data shall be submitted on electronic media that is acceptable to the Contracting Officer. A permanent exterior label shall be affixed to each disk submitted. The label shall indicate the type of schedule (Baseline, Update, Recovery, Change, etc.), full contract number, Project Name used to identify project in scheduling software, contract name & location, data status date, diskette number with total number of diskettes in set, software name and version used to run the schedule, and the name and telephone number of person responsible for the schedule.

For major revisions, updates, or changes to the network diagram, once accepted by the Contracting Officer, the Contractor shall submit these same diagrams and reports.

1.7.3 Monthly Network Analysis Updates

At monthly intervals the Contractor and Government representatives will meet to jointly update the project schedule and agree on percentages of payment for each activity progressed during the update period. The purpose of the meeting is to determine progress payment amounts for each activity, allow all parties to evaluate project status at the data date, provide a complete and accurate update of procurement and construction progress, create an historical record of the project and establish prediction of completion date(s) based upon current status. The contractor is

responsible to gather all supporting documentation, present the update data for the schedule and record the meeting minutes. All progress payment amounts will be derived from and tied to the cost-loaded schedule activities. Submit at monthly intervals a report of the actual construction progress by updating the required reports and the time scaled logic diagram. Meeting to update the schedule and the submission of an error free, acceptable updated schedule to the Government is a condition precedent to the processing of the Contractor's pay request. As a minimum, the following actions will be accomplished during the meeting:

a. Identify activities started and completed during the previous period and enter the Actual Start and Actual Finish dates. It will be understood that Actual Start is defined as the date that work begins on an activity with the intent to pursue the work represented by the activity to substantial completion, and Actual Finish is defined as the date that the activity's work is substantially complete to the point that its successor activity(s) may begin.

b. Show estimated duration (in workdays) to complete each activity started but not completed (remaining duration).

c. Indicate percentage of cost payable and percent of work complete as separate and independent entries for each activity. The assignment of an Actual Finish date to an activity does not imply that the activity's percent of payment will be statused to one hundred (100) percent.

d. Reflect changes in the network diagram. All changes (i.e., remaining duration changes, logic changes, new logic, conformed change orders, new activities, changes due to Conformed Modifications, changes in work sequence, entry of as-built relationship logic, etc.) shall be recorded and a note added to the activity log field. The log shall include as a minimum, the date and reason for the change, and description of the change.

e. Submit two (2) copies of a Narrative Report describing: 1) Progress made in each area of the project; 2) Changes in the following: activities, original durations, logic interdependencies, milestones, planned sequence of operations, critical path, and resource and loading; 3) Pending items and status thereof, including permits, change orders, and time extensions; 4) Status of Contract Completion Date and interim milestones; 5) Current and anticipated delays (describe cause of the delay and corrective action(s)); 6) Description of current and future schedule problem areas. Each entry in the narrative report will cite the respective Activity ID and Activity Description.

f. Submit two (2) copies of the reports listed in the paragraph entitled "Required Tabular Reports".
g. Submit two (2) hard copies of the network diagrams and two (2) sets of data disks.

h. Submit two (2) copies of the Update Meeting minutes.

1.7.4 Summary Network

A summary network shall have the same network format as the Baseline Network Analysis Schedule. The summary network will contain a minimal number of activities that represent the general approach of work sequence. The summary will be a time-scaled logical sequence by Phase Code. The Contractor shall submit a summary network diagram along with the Baseline

Network Analysis Schedule. A summary network update shall be submitted every three (3) months during the contract duration and immediately following acceptance of each major schedule change. Submit the following:

a. Two (2) copies of the summary network diagram.
b. Two (2) copies of the Activity ID Report.
c. Two (2) copies of the Total Float Report.
d. Two (2) copies of the Earned Value Report indicating the actual cash flow for the current updated (not summary) network based upon both the early and late start schedules.

1.7.5 AS-BUILT SCHEDULE

As a condition precedent to the release of retention and making final payment, the Contractor shall submit an "As-Built Schedule", which is the last schedule update. The As-Built Schedule shall reflect the exact manner in which the project was actually constructed (including actual start and finish dates, activities, sequences, and logic) and shall be certified by the Contractor's Project Manager and Construction Scheduler as being a true reflection of the way the project was actually constructed. If more than one person filled the position(s) during the course of the project, each person will provide certification for the period of time they were responsible.

1.8 CONTRACT MODIFICATION

When a contract modification to the work is required, submit proposed revisions to the network with a fragnet and a cost proposal for each proposed change. All modifications shall be incorporated into the network analysis system as separately identifiable activities broken down and inserted appropriately on the first update following issuance of a directive to proceed with the change. Submit two (2) copies of the Total Float Report, Log Report and a copy of the proposed Time Impact Analysis on disk, with the cost proposal. Unless the Contracting Officer requests otherwise, only conformed contract modification fragnets will be added into the subsequent monthly updates. All revisions to the current baseline schedule activities that are necessary to further refine the schedule so that the changed work activities can be logically tied to the schedule shall be made. Financial data shall not be incorporated into the schedule until the Contracting Officer signs the contract modification.

1.8.1 Time Impact Analysis:

The Time Impact Analysis method shall be used by the Contracting Officer and the Contractor in determining if a time extension or reduction to the contract milestone date(s) is justified. The Contractor shall provide a Time Impact Analysis to the Contracting Officer for any proposed contract change or as support for a Value Engineering Proposal, Variance Request, Claim or Request for Equitable Adjustment by the Contractor. Submit the Time Impact Analysis schedule, reports, etc. on disk and a printed / plotted hardcopy.

a. The Contractor shall submit a Time Impact Analysis (TIA) illustrating the influence of each change or delay on the Contract Completion Date or milestones. Unless the Contracting Officer requests an interim update to the schedule, the current monthly updated schedule accepted by the Government shall be used to display the impacts of the change. Unless requested by the Contracting Officer, no other non-conformed changes will be incorporated into the schedule being used

to justify the change impact.

b. Each TIA shall include a Fragmentary Network (fragnet) demonstrating how the contractor proposes to incorporate the impact into the project schedule. A fragnet is defined as the sequence of new activities and/or activity revisions, logic relationships and resource changes that are proposed to be added to the existing schedule to demonstrate the influence of impacts to the schedule. The fragnet shall identify the predecessors to the new activities and demonstrate the impacts to successor activities. The Contractor shall provide a hardcopy printout of the fragnet activities and relationships being added and also insert the fragnet into the most current, accepted Monthly Network Analysis Update, run the schedule calculations and submit the impacted schedule with the proposal, claim, etc. Include a narrative report describing the effects of new activities and relationships to interim and contract completion dates, with each TIA. Submit tie extension requests with a Time Impact Analysis and three hardcopies of the fragnet, impacted schedule (with fragnet loaded), Total Float Report, Narrative Report and Log Report.

c. Following the Contractor's receipt of a contract modification on a Standard Form 30 signed by the Government; all changes in the fragnet used to determine impacts, shall be incorporated into the schedule. Changes will occur during the next monthly schedule update meeting.

1.8.2 No Reservation-Of-Rights

All direct costs, indirect costs, and time extensions will be negotiated and made full, equitable and final at the time of modification issuance.

1.9 CHANGES TO THE NETWORK ANALYSIS SCHEDULE

If changes in the method of operating and scheduling are desired, the Contracting Officer shall be notified in writing stating the reasons for the change. If the Contracting Officer considers these changes to be of a major nature, the Contractor may be required to revise and submit for acceptance, without additional costs to the Government, the network diagrams and required reports. A change may be considered of a major nature if the estimated time required or actually used for an activity or the network logic has varied from the original plan to a degree that there is a reasonable doubt as to the effect on the contract completion date(s). Changes that affect activities with adequate float time shall be considered a major change when their cumulative effect would extend the contract completion date.

1.10 FLOAT

Use of float suppression techniques, such as; preferential sequencing (arranging critical path through activities more susceptible to Government caused delay), lag logic restraints, zero total or free float constraints, extended activity times, or imposing constraint dates other than as required by the contract, shall be cause for rejection of the project schedule or its updates. The use of Resource Leveling (or similar software features) used for the purpose of artificially adjusting activity durations to consume float and influence the critical path is expressly prohibited.

1.10.1 Definition of Float

Free Float is the length of time the start of an activity can be delayed without delaying the start of a successor activity. Total Float is the length of time along a given network path that the actual start and finish of activity(s) can be delayed without delaying the project completion date. Project Float is the length of time between the Contractor's Early Completion (or Substantial Completion or similar activity) and the Contract Completion Date.

1.10.2 Ownership of Float

Float available in the schedule, at any time shall not be considered for the exclusive use of either the Government or the Contractor. During the course of the contract execution, any float generated due to the efficiencies or either party is not for the sole use of the party generating the float; rather it is a shared commodity to be reasonably used by either party. Efficiencies gained as a result of favorable weather with a calendar month, where the number of days of normally anticipated weather is less than expected, will also contribute to the reserve of float. A schedule showing work completing in less time than the contract time, and accepted by the Government, will be considered to have Project Float. Project Float will be a resource available to both the Government and the Contractor. No time extensions will be granted nor delay damages paid unless a delay occurs which impacts the Project's critical path, consumes all available float or contingency time, and extends the work beyond the Contract Completion Date.

1.10.3 Negative Float

Negative float will not be a basis for requesting time extensions. Any extension of time will be addressed in accordance with the paragraphs entitled "CONTRACT MODIFICATION". Scheduled completion date(s) that extend beyond the contract or phase completion date(s) (evidenced by negative float) may be used in computations for assessment of payment withholdings. The use of this computation is not to be construed as a means of acceleration.

1.11 THREE-WEEK LOOK AHEAD SCHEDULE

To provide a more detailed day-to-day planning of upcoming construction work, the Contractor shall prepare and issue detailed work plans that coordinates with and supplement the above defined network analysis. The work plans shall be keyed to the CPM activity numbers and shall be submitted each week and shall show the project activities that will occur during the current and following two-week interval. Additionally, the critical path activities are to be identified on the Three-Week Look Ahead Schedule. The schedule will be a bar chart type schedule prepared by the Contractor in sufficient detail to define the work to be accomplished, the crews, construction tools and equipment to be used during the current and next two-week interval. The bar charts shall be formatted to allow reproduction on letter (8-½x11) sheets. Three (3) copies of the bar chart schedules shall be delivered to the Contracting Officer not less that three (3) work hours prior to the start of the weekly coordination meeting.

1.12 WEEKLY COORDINATION MEETING

In conjunction with the receipt of the Three-Week Look Ahead Schedule, a coordination meeting will be held each week on-site to discuss the work

schedule. The Contractor shall make a presentation of the previously submitted and current Three-Week Look Ahead Schedules to the Contracting Officer so as to provide an overview of the project's schedule and provide an opportunity to discuss items of coordination. Consideration of materials, crews, and equipment shall be addressed to ascertain their respective adherence to the Three-Week Look Ahead Schedule and the overall network for the project defined above. The Contractor will take meeting minutes. All meeting minute entries will be keyed to the schedule activity numbers) being addressed. Within one (1) day of the meeting, the Contractor will provide a draft copy of the meeting minutes to the Contracting Officer for review and comment. Final copies of the minutes containing the comments provided by the Contracting Officer will be issued within three (3) days of the meeting.

1.13 CORRESPONDENCE AND TEST REPORTS

All correspondence (e.g., letters, Requests for Information (RFIs), e-mails, meeting minute items, Production and QC Daily Reports, material delivery tickets, photographs, etc.) shall reference the Schedule Activity Number(s) that are being addressed. All test reports (e.g., concrete, soil compaction, weld, pressure, etc.) shall reference the Schedule Activity Number(s) that are being addressed.

PART 2 PRODUCTS - Not Used.

PART 3 EXECUTION - Not Used.

-- End of Section --

SECTION TABLE OF CONTENTS

DIVISION 01 - GENERAL REQUIREMENTS

SECTION 01 33 00.12 10

SUBMITTAL PROCEDURES FOR DESIGN-BUILD PROJECT

-- End of Section Table of Contents --

SECTION 01 33 00.12 10

SUBMITTAL PROCEDURES FOR DESIGN-BUILD PROJECT

PART 1 GENERAL

1.1 REFERENCE

The publication listed below forms a part of this specification to the extent referenced. The publication is referenced to in the text by basic designation only.

CONSTRUCTION SPECIFICATIONS INSTITUTE

Manual of Practice
Construction Specifications Institute 601 Madison Street Alexandria, Virginia 22314-1791

NATIONAL INSTITUTE OF BUILDING SCIENCES (NIBS)

Unified Master Reference List (UMRL)
National Institute of Building Sciences
1090 Vermont Avenue, NW, Suite 700
Washington, DC 20005-4905
Email: nibs@nibs.org FAX: (202) 289-1092 Tele: (202) 289-7800

MIDDLE EAST DISTRICT

Design Instructions Manual
U.S. Army Corps of Engineers
Middle East District
201 Prince Frederick Drive
Winchester, Virginia 22602

1.2 SUBMITTAL CLASSIFICATION

Submittals are classified as follows:

1.2.1 DESIGN SUBMITTALS

Contractor Furnished design submittals are the various design documents which primarily consist of specifications, drawings and design analysis and calculations. The Design-Build Contractor shall begin construction work once the Government has reviewed the Design-Build Contractor's design submittal and has cleared it for construction. Clearance for construction shall not be construed as meaning Government approval. Unless otherwise indicated, the risk for the design is the sole responsibility of the Design-Build Contractor.

1.2.2 CONSTRUCTION SUBMITTALS

1.2.2.1 Contractor Furnished Government Accepted Construction Submittals Government approved construction submittals are primarily related to plans (Contractor Quality Control, Accident Prevention, Resident Management System, Area Use etc) schedules (Project Schedule/Network Analysis), and certificates

of compliance. They may also include proposed variations to approved design documents in accordance with the paragraph entitled "VARIATIONS".

1.2.2.2 For Information Only Construction Submittals (FIO)

All submittals not requiring Designer of Record or Government approval will be for information only.

1.3 SUBMITTAL CERTIFICATION

The CQC organization shall be responsible for certifying that all submittals and deliverables have been reviewed in detail for completeness, are correct, and are in strict conformance with the contract drawings, specifications, and reference documents.

1.3.1 Effective Quality Control System

The Design-Build Contractor is responsible for quality control and shall establish and maintain an effective quality control system in compliance with Contract Clause 52.236-21 SPECIFICATIONS AND DRAWINGS FOR CONSTRUCTION -ALTERNATE I and specification section 01451 CONTRACTOR QUALITY CONTROL.

1.3.1.1 Organizational Responsibility

The quality control system shall cover all design, construction, subcontractor, manufacturer, vendor, and supplier operations at any tier, both onsite and offsite.

1.3.1.2 CQC System Manager Review and Approval

Prior to submittal, all items shall be checked and approved by the Design-Build Contractor's Quality Control (CQC) System Manager. If found to be in strict conformance with the contract requirement, each item shall be stamped, signed, and dated by the CQC System Manager. Copies of the CQC organizations review comments indicating action taken shall be included within each submittal.

1.3.1.3 Determination of Compliance

Each submittal shall be complete and in sufficient detail to allow ready determination of compliance with contract requirements by the Contracting Officer.

1.3.2 Responsibility for Errors or Omissions

It is the sole responsibility of the Design-Build Contractor to ensure that submittals do or do not comply with the contract documents. Government review, clearance for construction, or approval by the Contracting Officer shall not relieve the Design-Build Contractor from responsibility for any errors or omissions in such drawings, nor from responsibility for complying with the requirements of this contract.

1.3.2.1 Government Review

Government review, clearance for construction, or approval of post design construction submittals shall not be construed as a complete check, but will indicate only that the general method of construction, materials, detailing and other information are satisfactory.

1.3.3 Substitutions

After design submittals have been reviewed and cleared for construction by the Contracting Officer, no resubmittal for the purpose of substituting materials or equipment will be considered unless justified as indicated in the paragraph entitled VARIATIONS.

1.3.4 Additional Submittals

In conjunction with Contract Clause 52.236-5 MATERIAL AND WORKMANSHIP, the Contracting Officer may request submittals in addition to those specified when deemed necessary to adequately describe the work.

1.3.5 Untimely and Unacceptable Submittals

If the Design-Build Contractor fails to submit submittals in a timely fashion, or repetitively submits submittals that are not in strict conformance with the contract documents, no part of the time lost due to such actions shall be made the subject of claim for extension of time or for excess costs or damages by the Design-Build Contractor.

1.3.6 Stamps

Stamps shall be used by the Design-Build Contractor on all design and post design construction submittals to certify that the submittal meets contract requirements and shall be similar to the following:

Design-Build Contractor (Firm Name) Contract Number Contract Name
I certify that this submittal accurate, is in strict conformance with all contract requirements, has been thoroughly coordinated and cross checked against all other applicable disciplines to prevent the omission of vital information, that all conflicts have been resolved, and that repetition has been avoided. It is complete and in sufficient detail to allow ready determination of compliance with contract requirements by the Contracting Officer.

Name of CQC System Manager: _____
Signature of CQC System Manager: _____
Date: _____

1.4 ENGLISH LANGUAGE

All specifications, drawings, design analysis, design calculations, shop drawings, catalog data, materials lists, and equipment schedules submitted shall be in the English language.

1.5 UNITS OF MEASUREMENT

Design documents shall be prepared in accordance with the guidance offered in SECTION 00 31 10 METRIC MEASUREMENTS.

The metric units used are the International System of Units (SI) developed and maintained by the General Conference on Weights and Measures (CGPM); the name International System of Units and the international abbreviation SI were adopted by the 11th CGPM in 1960.

1.5.1 Drawings

All site layout data shall be dimensioned in meters or coordinates, as

appropriate. All details and pipe sizes shall be dimensioned in millimeters.

EXAMPLE: Masonry openings shall be a U.S. module to suit a standard U.S. door. The dimensions of the opening shall be given in SI units.

1.5.2 Design Calculations

Calculations shall be in English or SI units as deemed appropriate by the designer to meet the requirements of the design. Quantities on the contract drawings stated in metric units, shall also be stated in SI units in the design analysis to match the drawings.

1.5.3 Specifications
All equipment and products shall be specified by U.S. standards and described by SI units.

1.6 WITHHOLDING OF PAYMENT FOR SUBMITTALS

1.6.1 Design Submittals

Payment for Design work will not be made in whole or in part until the Government has reviewed and cleared the design for construction.

1.6.2 Construction Submittals

Payment for materials incorporated in the work will not be made if required approvals have not been obtained. In event under separate clause of the contract, the Design-Build Contractor is allowed partial or total invoice payment for materials shipped from the Continental United States (CONUS), and/or stored at the site, the Design-Build Contractor shall with his request for such payment, submit copies of approvals (ENG Form 4025) certifying that the materials that are being shipped and/or stored have been approved and are in full compliance with the contract technical specifications.

PART 2 PRODUCTS

2.1 GENERAL

The following are contract deliverables which expound upon and finalize the design parameters/requirements outlined within the contract documents. They shall be prepared in such a fashion that the Prime Contractor is responsible to the Government and not as an internal document between the Prime Contractor and its Subcontractors, Vendors, Suppliers, etc.

2.2 DESIGN ANALYSIS

A design analysis, written in the English Language with English units of measure (and SI units in parenthesis), shall be submitted for review by the Government. The design analysis is a written explanation of the project design which is expanded and revised (updated) as the design progresses. The design analysis shall contain all explanatory material giving the design rationale for any design decisions which would not be obvious to an engineer reviewing the final drawings and specifications. The design analysis contains the criteria for and the history of the project design, including criteria furnished by the Government, letters, codes, references, conference minutes, and pertinent research. Design calculations, computerized and manual, are included in the design analysis. Narrative descriptions of design solutions are also included. Written material may be illustrated by diagrams and sketches to convey design concepts. Catalog cuts and manufacturer's data for

all equipment items, shall be submitted. Copies of all previous design phase review comments and the actions assigned to them shall be included with each submission of the design analysis. Specific requirements for the design analysis, listed by submittal phase, are contained hereinafter.

2.3 DESIGN CALCULATIONS

When they are voluminous, they shall be bound separately from the narrative part of the design analysis. The design calculations shall be presented in a clean and legible form incorporating a title page and index for each volume. A table of contents, which shall be an index of the indices, shall be furnished when there is more than one volume. The source of loading conditions, supplementary sketches, graphs, formulae, and references shall be identified. Assumptions and conclusions shall be explained. Calculation sheets shall carry the names or initials of the computer and the checker and the dates of calculations and checking. No portion of the calculations shall be computed and checked by the same person.

2.3.1 Automatic Data Processing Systems (ADPS)

When ADPS are used to perform design calculations, the design analysis shall include descriptions of the computer programs used and copies of the ADPS input data and output summaries. When the computer output is large, it may be divided into volumes at logical division points.

2.3.1.1 Computer Printouts

Each set of computer printouts shall be preceded by an index and by a description of the computation performed. If several sets of computations are submitted, they shall be accompanied by a general table of contents in addition to the individual indices.

2.3.1.2 Preparation of the Description

Preparation of the description which must accompany each set of ADPS printouts shall include the following.

a. Explain the design method, including assumptions, theories and formulae.
b. Include applicable diagrams, adequately identified.
c. State exactly the computation performed by the computer.
d. Provide all necessary explanations of the computer printout format, symbols, and abbreviations.
e. Use adequate and consistent notation.
f. Provide sufficient information to permit manual checks of the results.

2.4 SPECIFICATIONS

Specifications shall be prepared in accordance with the Construction Specifications Institute (CSI) format. The Design-Build Contractor prepared specifications shall include as a minimum, all applicable specifications sections referenced by the CSI. Where the CSI does not reference a specification section for specific work to be performed by this contract, the Design-Build Contractor shall be responsible for creating the required specification.

2.4.1 Preparation of Proprietary Non-Generic Design Documents

During the course of design, the designer shall specify proprietary materials, equipment, systems, and patented processes by trade name, make, or

catalog number. The subsequent use of construction submittals to supplant and/or supplement incomplete design effort is unacceptable. Design submittals containing non-proprietary and/or generic design criteria where proprietary items are available, will be returned for resubmission.

2.4.2 Use of Unified Facilities Guide Specifications (UFGS)

If UFGS are used, it is the sole responsibility of the Design-Build Contractor to prepare these specifications in strict conformance with the paragraph entitled PREPARATION OF PROPRIETARY NON-GENERIC DESIGN DOCUMENTS. UFGS containing non-proprietary and/or generic design criteria where proprietary items are available will be returned for resubmission. If the UFGS contains a "SUBMITTALS" paragraph, the Design-Build Contractor shall delete it and incorporate all required information directly into the design documents. Under no circumstances will the Design-Build Contractor be permitted to use submittals and shop drawings to finalize an incomplete design.

2.4.3 Quality Control and Testing

Specifications shall include required quality control and further indicate all testing to be conducted by the Design-Build Contractor, its subcontractors, vendors and/or suppliers.

2.4.4 Ambiguities and indefinite specifications

Ambiguities, indefinite specification requirements (e.g., highest quality, workmanlike manner, as necessary, where appropriate, as directed etc)and language open to interpretation is unacceptable.

2.4.5 Industry Standards

2.4.5.1 U.S. Industry Standards

The Specifications shall be based on internationally accepted U.S. industry Standards. Customarily accepted publications may be found in the UNIFIED MASTER REFERENCE LIST (UMRL) which may be located at the following URL:

http://www.ccb.org/welcome.py

To access the UMRL select the "Unified Facilities Guide Specifications" tab and scroll down to Unified Master Reference List (UMRL) (PDF version). This document lists publications referenced in the Unified Facilities Guide Specifications (UFGS) of the Corps of Engineers (USACE), the Naval Facilities Engineering Command (NAVFAC), the Air Force Civil Engineer Support Agency (AFCESA), and the guide specifications of the National Aeronautics and Space Administration (NASA). This document is maintained by the National Institute of Building Sciences (NIBS) based on information provided by the agencies involved and the standards producing organizations. The listing is current with information available to NIBS on the date of this publication. Standards referenced in specifications and drawings prepared by the Design-Build Contractor shall be by specific issue; the revision letter, date or other specific identification shall be included.

2.4.5.2 Non U.S. Industry Standards

If non U.S. industry standards (e.g., codes, regulations, or technical references and norms) are authorized for use under this contract and are incorporated in the Design-Build Contractor's design, one (1) copy of each

standard referenced shall be provided to the Government. The Contractor is responsible for coordination of all Standards to ensure fully functioning facility and full compliance with the specifications.

2.4.5.3 Conflicts between U.S. Industry Standards and Non U.S. Industry Standards

When there is a conflict between U.S. Industry Standards and Non U.S. Industry Standards, the U.S. Industry Standards shall prevail.

2.4.6 Incorporation of Government review comments
Subsequent to submission to the Government, the specifications shall be finalized by the incorporation of Government review comments.

2.5 DRAWINGS

Drawings, prepared in the English language with SI units of measure, are a part of each submittal. The working drawings shall be adequately labeled and cross-referenced for review. Complete, thoroughly checked and coordinated contract drawings shall be submitted. The contract drawings submitted for final review shall include the drawings previously submitted which have been revised and completed as necessary. The Design-Build Contractor shall have incorporated any design review comments generated by previous design review(s), have completed all of his constructability and coordination checks, and have the drawings in a Ready-to-Build condition. The drawings shall be complete at this time and contain all the details necessary to ensure a clear understanding of the work throughout construction.

2.5.1 Drawing Size

All drawings shall be prepared in size "D" sheets (558.8 mm by 812.8mm, half size/ledger) or if approved by the contracting Officer of an internationally recognized size approximately 22 inches (56 cm) by 34 inches (86 cm). Drawings shall be trimmed to size if necessary.

2.5.2 Computer Assisted Design and Drafting (CADD)

a. Computer Assisted Design and Drafting (CADD) is required for all work related to this contract. The CADD deliverables shall meet AEC standards and the requirements of the Middle East Design Instructions Manual, Chapter 22 entitled COMPUTER ASSISTED DESIGN AND DRAFTING. The Contractor shall furnish the digital as-built drawing files in the format native to the 2004 version in common use of AutoCadd. Drawings prepared in any convention other than CADD, must have approval of the Contracting Officer.

b. The Contractor shall furnish the digital design drawing files for each design submittal. When the project is completed the Contractor shall provided as-built drawing files. Each drawing in a design shall have an electronic file copy. Only one drawing should occupy an electronic file. The file shall have only one paper space for each file, named "sheet". Each finished drawing (sheet) shall have its own separate plot file. The plot file for each finished drawing shall be provided in a format suitable to be legibly plotted on an HP compliant 11"x17" laser printer/plotter. The electronic file name shall be displayed on each drawing. All unnecessary files shall be detached, and all files, and all files attached for "designer information" shall be labeled as such in the description field. Include all files, both graphic and non-graphic required for the project (e.e., blocks, plot files, etc.).

c. In addition to the CADD file the Contractor shall provide a single Adobe Acrobat file containing all of the design drawings with an index and organized in a logical manner.

2.5.3 Plotter Prepared Original Drawings

Plotter prepared original drawings shall be prepared on 20 pound bond paper, unless otherwise approved and shall be plotted on the matte side. Raster plotters must provide a minimum resolution of 400 dpi while vector plotters shall provide a minimum resolution of 0.0010 inch with an accuracy of +0.1% of the move and a repeatability error of not more than 0.005 inch. Drawings produced from dot matrix plotters are not acceptable. Plots accompanied by the digital design file may be prepared on vellum: translucent bond is not acceptable. Line density shall be equivalent to that produced by black India ink: half-tones and gray scale plots are not acceptable unless otherwise approved. Manual changes to plotted originals are not acceptable.

2.5.4 Half-Size Reduction

Preparation of all work shall accommodate half size reduction unless instructed otherwise by the Contracting Officer.

2.5.5 Symbols and Abbreviations

Symbols and abbreviations shall be in accordance with the Middle East District (MED) Design Instructions Manual, Chapter 2, and/or conform to the symbols used with a CADD program such as Bentley Microstation.

2.5.6 Design Discipline Designation Format

The drawing package shall be divided into the following proposed divisions:

Designation	Discipline
C	Civil
XE	Exterior Electrical and Communication
XM	Exterior Mechanical
S	Structural
P	Plumbing, Process and Piping
M	Mechanical Design
FP	Fire Protection and Life Safety
E	Electrical

Each drawing for the particular facility shall be designated by the discipline designation and sheet number (e.g., E-6 is the sixth Electrical drawing; E-7 is the seventh Electrical drawing etc.). Standard detail drawings sheet reference numbers shall have the letters "S" preceding the discipline. (Example: SE-6).

2.5.7 Grouping Drawings

A building or individual facility design shall, except for site development drawings, be grouped in the design drawing package so that a single building may be withdrawn by deleting or removing a consecutive block of sheets.

2.5.8 Title and Revision Block

Title and revision block shall match FIGURE 1 through 5 furnished in the paragraph entitled ATTACHMENTS.

2.5.9 Drawing Scales

The scales indicated on the following list shall, in general, be used for all drawings. The Contractor may, at its option, make exceptions to scales indicated, if approved in writing by the Contracting Officer.

Site, Grading and Utility Plans - 1:500
Key Plans as large as practical
Cross Sections - 1:10
Details - As required for clarity

2.5.10 Binding

All volumes of drawing prints shall be firmly bound and shall have covers of heavier bond than the drawing sheets. If posts are used to fasten sheets together, the drilled holes on the bond edges of the sheets shall be on 8-1/2-inch centers.

2.5.11 Typical Sheets

Typical sheets of standard details uniformly used on all buildings are authorized and encouraged. Sheets of standard details may be prepared so that they can be reused if the design package must be divided into separate construction packages. Each typical detail drawing sheet may be limited to a particular design discipline. Standard detail sheets shall be organized by discipline as are the other drawing sheets. Details peculiar to one facility shall not be shown in the standard details but with the group of drawings for the facility to which it pertains.

2.5.12 Index Sheet(s)

The first sheet of each volume in a project shall be a cover sheet. In general, the second sheet shall be the first index. Multiple index sheets may be required, depending on the project size. All index sheets shall be included with each volume of drawings and shall be an index of all the individual drawings in all volumes. The index shall list sequentially the site development drawings, each facility's drawings, and the standard details drawings (if any), and shall locate them by volume and file number. Each index sheet shall be signed and stamped by a principal of the Design-Build Contractor.

2.5.13 Drawing File Number

The File Number is unique to each drawing and is a combination of a project location code, project number, facility designator and the CADD file name. Unassigned numbers or skipped sheets shall be labeled as "Not Used" on the index sheets. Cover sheets are not numbered.

2.5.14 Specifications Placed on the Drawings

Details of standard products or items which are adequately covered by specifications shall not be included on the drawings.

2.5.15 Legends

For each submittal, legends of symbols and lists of abbreviations shall be placed on the drawings. They shall include all of the symbols and abbreviations used in the drawing set, but shall exclude any symbols and

abbreviations not used. Since many symbols are limited to certain design disciplines, there is a definite advantage to the use of separate legends on the initial sheet of each design discipline or in the Standard Details package for each discipline. If legends have not been shown by discipline, a legend shall be placed on the first drawing.

2.5.16 Location Grid

To facilitate the location of project elements and the coordination of the various disciplines' drawings, all plans shall indicate a column line or planning grid, and all floor plans (except structural plans) shall show room numbers.

2.5.17 Composite and Key Plans

If the plan of a large building or structure must be placed on two or more sheets in order to maintain proper scale, the total plan shall be placed on one sheet at a smaller scale. Appropriate key plans and match lines shall appear on segmented drawings. Key plans shall be used not only to relate large scale plans to total floor plans but also to relate individual buildings to complexes of buildings. Key plans shall be drawn in a convenient location and shall indicate the relative location of the represented plan area by crosshatching.

2.5.18 Revisions

Drawing revisions shall be prepared only on the original CADD files. A revision area is required on all sheets.

PART 3 EXECUTION

3.1 GENERAL

3.1.1 Design Concept Coordination Meeting

In addition to regular meetings with the Government the Contractor shall conduct formal status briefings on a monthly basis to provide a management overview of design development. Shortly after contract award the Government may choose to conduct meetings with the Design-Build Contractor to refine proposal concept features. The purpose of the meeting is to assure attention to project requirements and to suggest ways of improving the design prior to tentative level submissions.

3.1.2 Government Design Changes

Government design changes which do not increase construction costs shall be made at no charge to the Government. The Contracting Officer may request design submittals in addition to those listed when deemed necessary to adequately describe the work covered in the contract documents. Submittals shall be made in the respective number of copies and to the respective addresses set forth in the paragraph entitled SUBMITTAL PROCEDURE. Each submittal shall be complete and in sufficient detail to allow ready determination of compliance with contract requirements.

3.2 SUBMITTAL REGISTER

Contractor-Furnished Design Documents shall be incorporated in the NAS and ENG FORM 4288, Submittal Register. Refer to Section 01 32 17.00 20 for details.

3.2.1 Construction Submittal Register (ENG Form 4288)

Attached to this section is ENG Form 4288 which the Contractor is responsible for developing for the design-build portion of this contract. All design and construction submittals shall be shown on this register. The submittal register shall be the controlling document and will be used to control all construction submittals throughout the life of the contract. The Contractor shall maintain and update the register on a monthly basis for the Contracting Officer's approval.

A copy of the initial ENG FORM 4288 and each monthly update prepared by the Contractor, shall be submitted to:

U.S. Army Corps of Engineers Middle East District
(CEMED-CD-Q)
201 Prince Frederick Drive Winchester, Virginia 22602

3.3 TRANSMITTAL FORM (ENG Form 4025)

The transmittal form (ENG Form 4025) generated in the QCS module of RMS shall be used for submitting both design and construction submittals in accordance with the instructions on the reverse side of the form. This form shall be properly completed by filling out all the heading blank spaces and identifying each item submitted. Special care will be exercised to ensure proper listing of the specification paragraph and/or sheet number of the contract drawings pertinent to the data submitted for each item.

3.4 PROGRESS SCHEDULE

The Contractor shall prepare and submit a resource loaded design progress schedule to the Contracting Officer as part of the NAS monthly updates. The progress schedule shall show, as a percentage of the total design price, the various items included in the contract and the order in which the Contractor proposes to carry on the work, with dates on which he will start the features of the work and the contemplated dates for completing same. Significant milestones such as review submittals shall be annotated. The Contractor shall assign sufficient technical, supervisory and administrative personnel to insure the prosecution of the work in accordance with the progress schedule. The Contractor shall correct the progress schedule at the end of each month and shall deliver copies to the Contracting Officer as required in NAS. The updated Project Schedule shall be used to measure the progress of the work, to aid in evaluating time extensions, and to provide the basis of all progress payments.

3.5 SUBMITTAL PROCEDURES

3.5.1 Design Submittals

Adequate time (a minimum of thirty (30) calendar days exclusive of mailing time) shall be allowed for review and clearance for construction. If the Contractor fails to submit design submittals in a timely fashion, or repetitively submits design submittals that are not in strict conformance with the contract documents, no part of the time lost due to such actions shall be made the subject of claim for extension of time or for excess costs or damages by the Contractor.

3.5.1.1 Middle East District (MED)

Nine (9) printed copies and one (1) electronic copy of all design submittals shall be transmitted to the Government at the following stateside address by means of ENG Form 4025:

U.S. Army Corps of Engineers
Middle East District
ATTN: CETAM-CD-Q
201 Prince Frederick Drive
Winchester, Virginia 22602

The drawings shall be submitted in half size].

3.5.1.2 Resident/Area Engineer Office
Kandahar Resident Area Office
Resident Engineer
U.S. Army Corps of Engineers
Kandahar Air Base, Afghanistan

One (1) printed copy and one (1) electronic copy of all design submittals shall be transmitted to the customer at the following address:
AFCEE/CXP
Mr. Joe Marcinkevich
Project Manger
129 Andrews Street, RM 319
Langley AFB, VA 23665-2714

One (1) printed copy and one (1) electronic copy of all design submittals shall be transmitted to the customer at the following address:
AFCENT
Mr. Dan Phillips
Program Manager
524 Shaw Drive, Suite 138
Shaw AFB, SC 29152

3.5.1.3 [Other Corps Districts or Center of Expertise}

An additional two (2) copies of all design submittals shall be transmitted to the Government at the following stateside address by means of ENG Form 4025:

OMAHA TSC:
Mr. Terry Sherman
U.S. Army Corps of Engineers
Transportation Systems Center
ATTN: Terry W. Sherman
1616 Capital Ave.
Omaha, NE 68102-4901

The drawings shall be submitted in half size.

3.5.1.4 Deliverables "R-Cleared for Construction"

Once the Design Documents have been "Cleared for Construction" by the Contracting Officer (R code), the Design-Build Contractor shall clearly identify each document by annotating it as "Cleared for Construction". One (1) complete hardcopy and CD set of all finalized design documents shall be submitted to the Government as follows:

U.S. Army Corps of Engineers

Middle East District
ATTN: CETAM-EN-T-Service Unit (S. Trussell)
201 Prince Frederick Drive
Winchester, Virginia 22602

[Resident] [Area] Engineer Office
Kandahar Resident Area Office
Resident Engineer
U.S. Army Corps of Engineers
Kandahar Air Base, Afghanistan

3.5.1.5 Editable CADD Format As-Builts

In accordance with Section 01 31 13.12 10 SPECIAL CLAUSES clause PREPARATION OF AS-BUILT DRAWINGS (CONTRACTOR), one (1) set of the Government approved As-Builts shall be submitted to the following address in an editable CADD format:

U.S. Army Corps of Engineers
Middle East District
ATTN: CETAM-EN-T-Service Unit (S. Trussell)
201 Prince Frederick Drive
Winchester, Virginia 22602

This requirement is in addition to all other submission requirements stated elsewhere in the contract.

3.5.1.6 Digital Transmission of Design Submittals

In addition to hard copies, the Design-Build Contractor shall submit design deliverables addressed by this specification in digital format. The contractor may not substitute electronic versions in lieu of the hard copies required. The following procedure shall be followed:

a. USE OF FILE TRANSFER PROTOCOL (FTP) SERVER. The Design-Build contractor will download all design files on either its own File Transfer Protocol (FTP) Server or on the Corps FTP Server. The procedure to be followed will be established at the Pre-Construction Conference and the appropriate log-in and password information will be exchanged between the Government and the Design-Build Contractor.

b. TRANSLATED OR CONVERTED FILES DRAWING FILES. Digital drawing files shall be prepared as indicated in the paragraph entitled COMPUTER ASSISTED DESIGN AND DRAFTING (CADD). Under NO circumstances shall the Design-Build Contractor translate (or convert) the files from one CADD software program to another (e.g., from AutoCAD to Bently MicroStation).

c. NOTIFICATION. The Design-Build Contractor shall notify all recipients by email that the Design submittal has been downloaded to the designated FTP server and is ready for Government review. This email shall include a scanned copy of the ENG Form 4025 signed by the Design-Build Contractor's Contractor Quality Control (CQC) Organization. It shall also include an updated digital copy of MED ENG Form 4288. The Government will use the digital submittal as an advance copy pending receipt of an official hardcopy version in accordance with the paragraph entitled SUBMITTAL PROCEDURE. Subsequent to a period of demonstrated successful performance, the Government may elect to eliminate the requirement to submit an official hardcopy version.
The ENG Form 4288 shall be prepared in be imported into the Corps of

Engineers Resident Management System (RMS) software.

d. RETURN OF GOVERNMENT REVIEWED SUBMITTALS. Subsequent to the Government review, the Eng Form 4025 with comments (if applicable) will be returned to the Design-build Contractor digitally via RMS to QCS. Hardcopies of these documents will subsequently be submitted to the Design-Build Contractor via the United States Postal Service (USPS). The Government may elect to stop sending hardcopies if it deems that digital transmission of design submittals is progressing satisfactorily.

e. SUPPLEMENTAL ACTIONS. All supplemental actions, re-submittals, and subsequently scheduled submissions shall be performed by the Design-Build contractor as indicated within this paragraph.

3.5.2 Post Design Construction Submittals

[Four (4) copies of all post design construction submittals shall be transmitted to the overseas field office administering the construction portion of the contract at the following address:
Kandahar Resident Area Office
Resident Engineer
U.S. Army Corps of Engineers
Kandahar Air Base, Afghanistan

Two (2) additional copies of each Post Design Construction submittal shall be transmitted to the Government at the following stateside address by means of ENG Form 4025:

U.S. Army Corps of Engineers
Middle East District
ATTN: CETAM-CD-Q
201 Prince Frederick Drive
Winchester, Virginia 22602

Submittals of Operations and Maintenance (O & M) Manuals in seven (7) copies shall be as follows:

U.S. Army Corps of Engineers
Middle East District
ATTN: CETAM-EC-CD-Q
201 Prince Frederick Drive
Winchester, Virginia 22602

OMAHA TSC:
Mr. Terry Sherman
U.S. Army Corps of Engineers
Transportation Systems Center
ATTN: Terry W. Sherman
1616 Capital Ave.
Omaha, NE 68102-4901

One (1) printed copy and one (1) electronic copy of all design submittals shall be transmitted to the customer at the following address:
AFCEE/CXP
Mr. Joe Marcinkevich
Project Manger
129 Andrews Street, RM 319

Langley AFB, VA 23665-2714

One (1) printed copy and one (1) electronic copy of all design submittals shall be transmitted to the customer at the following address:
AFCENT
Mr. Dan Phillips
Program Manager
524 Shaw Drive, Suite 138
Shaw AFB, SC 29152

The drawings shall be submitted in half size.

3.5.3 Submittal Numbering System

Instructions on the numbering system to be used for construction submittals follows:

3.5.3.1 Submittals

Submittals shall be listed on the Submittal Register (ENG Form 4288 in the Quality Control System (QCS) module) as follows:

a. List is prepared according to contract specifications and drawings, picking up all items involved in the project.

b. This list is divided into sections as indicated in the specifications for example:

01 31 13.12 10	Special Clauses
01 80 00.12 10	Technical Requirements
01 32 17.00 20	Network Analysis Schedule
01 33 00.12 10	Submittal Procedures for Design-Build Project
01 45 04.00 10	Contractor Quality Control

3.5.3.2 Numbering procedures for transmittal on ENG FORM 4025

a. Each section may include a list of items. All these items will then be listed with a progressive number within the sections they belong to, for example:

Sec. 01 31 13.12 10 will have 01311312 (Basic number)
Item x will have 01311312-1 Item y will have 01311312-2 Item z will have 01311312-3

Sec. 01 80 00.12 10 will have 01800012 (Basic number) Item x will have 01800012-1 Item y will have 01800012-2 Item z will have 01800012-3

Sec. 01 32 01.00 10 (01320) will have 01320100 (Basic number) Item x will have 01320100-1 Item y will have 01320100-2 Item z will have 01320100-3

Sec. 01 45 04.00 10 (01451) will have 01450400 (Basic number) Item x will have 01450400-1 Item y will have 01450400-2 etc.

b. It is evident a transmittal will never show a Section number i.e., 01800012, 01320100 etc., since these are only the basic numbers of the system. Numbers on transmittals will be the item numbers, i.e., 01311312-1, 01800012-13, 01320100-3, 01450400-2 etc. All items, as listed on the Submittal Register, will be submitted via a separate transmittal form ENG FORM 4025 thus avoiding getting together more than one item (as listed) and

more than one number. There are items, on the other hand, which may be submitted all together on the same transmittal form. This must be established before submission is made.

c. Section 01 80 00.12 10 (01015) Technical Requirements - this section will have basic number 01800012 - all items relative to it will be listed one by one on separate lines. ONLY one transmittal number will then be given for all of the item numbers listed. Each one of these items will be listed on the same Transmittal Number e.g., 01800012-5 in block "a" of ENG Form 4025 as item No.1, item No, 2, item No. 3:

3.5.3.3 Resubmittals

Should the Contractor be required to resubmit any transmittal, it will be accomplished by utilizing the same transmittal number followed by the number ".1" for the first resubmittal, ".2" for the second resubmittal, ".3" for the third resubmittal, etc. For example, a first resubmittal for specification section 01 80 00.12 10 TECHNICAL REQUIREMENTS would be written as 01800012-1.1, the second resubmittal would be written as 01800012-1.2, etc. The purpose of this system is to avoid deviations from Submittal Register as well as to avoid confusion arising from the use of more than one number on transmittal when more than one item number is submitted on the same form. This system will also facilitate the use, wherever required, on spread sheets and is compatible with specification section 01 45 02.00 10 (01312) QUALITY CONTROL SYSTEM (QCS).

3.5.4 Variations

If design documents or construction submittals show variations from the contract parameters and/or requirements, the Contractor shall justify such variations in writing, at the time of submission. Additionally, the Contractor shall also annotate block "h" entitled "variation" of ENG FORM 4025. After design submittals have been reviewed and cleared for construction by the Contracting Officer, no resubmittal for the purpose of substituting materials, equipment, systems, and patented processes will be considered unless accompanied by the following:

a. Reason or purpose for proposed variation, substitution, or revision.

b. How does quality of variation compare with quality of the specified item? This shall be in the form of a technical evaluation tabulating differences between the items originally specified and what is proposed.

c. Provide a cost comparison. This shall include an acquisition and life cycle cost comparison.

d. For proprietary materials, products, systems, and patented processes a certification signed by an official authorized to certify in behalf of the manufacturing company that the proposed substitution meets or exceeds what was originally specified.

e. For all other actions, a certification signed by a licensed professional engineer or architect certifying that the proposed variation or revision meets or exceeds what was originally specified.

f. Advantage to the Government, if variation is approved, i.e. Operation and Maintenance considerations, better product, etc.

g. Ramifications and impact, if not approved.

If the Government review detects any items not in compliance with contract requirements or items requiring further clarification, the Contractor will be so advised. Lack of notification by the Contracting Officer of any non-complying item does not relieve the Contractor of any contractual obligation.

3.5.5 Non-Compliance

The Contracting Officer will notify the Contractor of any detected noncompliance with the requirements of this specification. The Contractor shall take immediate corrective action after receipt of such notice. Such notice, when delivered to the Contractor at the worksite, shall be deemed sufficient for the purpose of notification. If the Contractor fails or refuses to comply promptly, the Contracting Officer may issue an order stopping all or part of the work until satisfactory corrective action has been taken. No part of the time lost due to such stop orders shall be made the subject of claim for extension of time or for excess costs or damages by the Contractor.

3.6 REVIEW OF CONTRACTOR PREPARED DESIGN DOCUMENTS

3.6.1 General

The work under contract will be subject to continuous review by representatives of the Contracting Officer. Additionally, joint design review conferences with representation by all organizations having a direct interest in the items under review may be held. The Design-Build Contractor shall furnish copies of all drawings and related documents to be reviewed at the review conference on or before the date indicated by the Government. Additional conferences pertaining to specific problems may be requested by the Design-Build Contractor or may be directed by the Contracting Officer as necessary to progress the work. The Design-Build Contractor shall prepare minutes of all conferences and shall furnish two copies to the Contracting Officer within seven (7) days after the conference.

3.6.2 Independent Design Review

The Design-Build Contractor shall have someone other than the Designer or Design Team perform an independent review of all specifications, drawings, design analysis, calculations, and other required data prior to submission to the Government. Upon completion of this review, the Design-Build Contractor shall certify that each design submittal is complete, accurate, is in strict conformance with all contract requirements, that repetition has been avoided, that all conflicts have been resolved, and that the documents have been thoroughly coordinated and cross checked against all the applicable disciplines to prevent the omission of vital information.

3.6.3 Contractor's Quality Control Organization Review

This review shall be for the purposes of eliminating errors, interferences, and inconsistencies, and of incorporating design criteria, review comments, specifications, and any additional information required. Design submittals submitted to the Contracting officer without evidence of the Contractor's certified approval will be returned for resubmission. No part of the time lost due to such resubmissions shall be made the subject of claim for extension of time or for excess costs or damages by the Contractor.

3.6.4 Government Review

The software program DrChecks will be utilized for all design review comments and responses both from the Government and Contractor. Further information on DrChecks will be available at the Pre-Construction Conference.

The contractor shall not begin construction work until the Government has reviewed the contractor's design and has cleared it for construction. Clearance for construction does not mean Government approval. Government review shall not be construed as a complete check but will evaluate the general design approach and adherence to contract parameters. The Government Review is often limited in time and scope. Therefore, the Contractor shall not consider any review performed by the Government as an excuse for incomplete work. Upon completion of the review, all comments will be forwarded to the Contractor. The Contracting Officer will indicate whether the design submittal has or has not been cleared for construction using the following action codes:

CODE	DESCRIPTION	STATUS
G	Other (See Comments)	Resubmit
X	Receipt Acknowledged - Does Not Comply	Resubmit
R	Acceptable for Release for Construction	Completed
K	Government Concurs with Interim Design	Completed

These codes shall NOT be used by the Design-Build Contractor. Design-Build Contractor's Quality Control Organization will annotate Block "g" entitled "FOR CONTRACTOR USE CODE" of Eng Form 4025-R using the action codes listed on the reverse side of the form.

Design submittals Cleared for Construction or Acceptable for Release for Construction by the Contracting Officer shall not relieve the Contractor from responsibility for any design errors or omissions and any liability associated with such errors, nor from responsibility for complying with the requirements of this contract.

3.6.4.1 Incorporation of Government Review Comments

The Contractor will be furnished comments from the various design sections of the Corps of Engineers Middle East District (MED), as well as from other concerned agencies involved in the review process. The review will be for conformance with the technical requirements and parameters of the contract documents. The Contractor shall either incorporate each comment or, if the Contractor disagrees technically and does not intend to comply with the comment(s), clearly outline with ample justification, its reasons for its noncompliance within five (5) days after receipt of the comment(s). Additionally, the Contractor is cautioned in that if it believes the action required by any comment exceeds the requirements of this contract, that he

should take no action and notify the Contracting Officer in writing immediately. The disposition of all comments shall be furnished in writing with the next scheduled submittal. The review comments and the submittal material for each design review will become the basis for any ensuing design work. Copies of the design review comments with the action taken on each comment noted, shall be bound in all succeeding volumes of the design analysis.

3.6.4.2 Conferences

As necessary, conferences will be conducted between the Design-Build Contractor and the Government to resolve review comments. There will be no additional compensation for these conferences.

3.6.4.3 Design Deficiencies

Design deficiencies noted by the Government shall be corrected prior to the start of design for subsequent features of work which may be affected by, or need to be built upon, the deficient design work.

3.6.5 Design Discrepancies

The Design-Build Contractor shall be responsible for the correction of incomplete design data, omissions, and design discrepancies which become apparent during construction. The Design-Build Contractor shall provide the Contracting Officer with a proposed recommendation for correcting a design error, within three (3) calendar days after notification by the Contracting Officer. The Contracting Officer will notify the Design-Build Contractor of any detected noncompliance with the foregoing requirements. The Design-Build Contractor shall take immediate corrective action after receipt of such notice. Such notice, when delivered to the Design-Build Contractor at the worksite, shall be deemed sufficient for the purpose of notification. If the Design-Build Contractor fails or refuses to comply promptly, the Contracting Officer may issue an order stopping all or part of the work until satisfactory corrective action has been taken. No part of the time lost due to such stop orders shall be made the subject of claim for extension of time or for excess costs or damages by the Design-Build Contractor. Should extensions of design, fabrication plans and/or specific manufacturer's details be required as a result of a Government issued Change Order, the Government will make an equitable adjustment in accordance with Contract Clause 52.243-4 entitled CHANGES.

3.7 Phased or "Fast-Track" Design

3.7.1 General

It is the Governments intention to "Fast-Track" the design for this contract. Design and construction sequencing shall be executed on an incremental basis as each approved phase of intrinsically related activities (e.g., demolition; geotechnical assessment; site work; exterior utilities; foundations; slab-on-grade, superstructure, exterior closure, roofing, interior framing to include intrinsically related rough-in of mechanical, electrical, interior finishes, etc.) of the design is completed. It is essential that phased design, to include the review process, be scheduled to produce construction approvals that support proper sequencing of all construction activities according to the accepted progress schedule.

3.7.1.1 Design Phases

The design phases shall be in accordance with the Contractor Furnished Design Documents Submittal Register (ENG FORM 4288) as accepted by the Contacting Officer.

3.7.1.2 Acceptance of ENG Form 4288

In all cases, ENG Form 4288 indicating the proposed phasing shall be submitted for review and acceptance by the contracting Officer prior to initiation of any procurement action or commencement of any construction.

3.7.2 Sequence of Design-Construction (Fast-Track)

After receipt of the Contract Notice to Proceed (NTP) the Contractor shall initiate design, comply with all design submission requirements and obtain Government review of each submission. The contractor may begin construction on portions of the work for which the Government has reviewed the final design submission and has determined satisfactory for purposes of beginning construction. The Contracting Officer will notify the Contractor when the design is cleared for construction. The Government will not grant any time extension for any design resubmittal required when, in the opinion of the Government, the initial submission failed to meet the minimum quality requirements as set forth in the contract.

3.7.3 Notice-to-Proceed for Limited Construction

If the Government allows the Contractor to proceed with limited construction based on pending minor revisions to the reviewed Final Design submission, no payment will be made for any in-place construction related to the pending revisions until they are completed, resubmitted and are satisfactory to the Government.

3.7.4 In-Place Construction Payment

No payment will be made for any in-place construction until all required submittals have been made, reviewed and are satisfactory to the Government.

3.7.5 Commencement of Construction

Construction of work may begin after receipt of the clearance for construction (Notice to Proceed) for each design phase. Any work performed by the Contractor prior to receipt of the clearance for construction, shall be at the Contractor's own risk and expense. Work cleared for construction that does not conform to the design parameters and/or requirements of this contract shall be corrected by the Contractor at no additional cost or time to the Government.

3.8 DESIGN STAGES (Not Used)

3.9 GENERAL DESIGN INSTRUCTIONS

3.9.1 Responsibility of the Design-Build Contractor

3.9.1.1 Professional Quality, Technical Accuracy, and Coordination

The Design-Build Contractor shall be responsible for the professional quality, technical accuracy, and the coordination of all design specifications, drawings, and other services furnished under this contract. Work must be organized in a manner that will assure thorough coordination between various details on drawings, between the various sections of the

specifications, and between the drawings and specifications. The Design-Build Contractor shall thoroughly cross-check and coordinate all work until he is professionally satisfied that no conflicts exist, vital information has not been omitted, and that indefinite language open to interpretation has been resolved.

3.9.1.2 Deviating From The "Cleared-For-Construction" Design

a.) The Contractor must obtain the approval of the Designer of Record (DOR) and the Government's concurrence for any Contractor proposed revision to the professionally stamped and sealed design reviewed and Cleared for Construction by the Government, before proceeding with the revision.

b.) The Government reserves the right to non-concur with any revision to the design, which may impact furniture, furnishings, equipment selections or operations decisions that were made, based on the reviewed and cleared for construction design.

c.) Any revision to the design, which deviates from the contract requirements (i.e., the RFP and the accepted proposal), will require a modification, pursuant to the Changes clause, in addition to Government concurrence. The Government reserves the right to disapprove such a revision.

d.) Unless the Government initiates a change to the contract requirements, or the Government determines that the Government furnished design criteria are incorrect and must be revised, any Contractor initiated proposed change to the contract requirements, which results in additional cost, shall strictly be at the Contractor's expense.

e.) The Contractor shall track all approved revisions to the reviewed and cleared for construction design and shall incorporate them into the as-built design documentation, in accordance with Section 01060 SC entitled PREPARATION OF AS-BUILT DRAWINGS (CONTRACTOR). The Designer of Record shall document its professional concurrence on the As-Builts for any revisions by affixing its stamp and seal on the drawings and specifications.

3.9.1.3 Government Oversight

The extent and character of the work to be done by the Design-Build Contractor shall be subject to the general oversight, supervision, direction, control, and review by the Contracting Officer.

3.9.1.4 Unlimited Drawing Rights

The Government shall have unlimited rights in all drawings, designs, specifications, notes and all other works developed in the performance of this contract, including the right to use same on any other Government design or construction without additional compensation to the Design-Build Contractor. The Design-Build Contractor hereby grants to the Government a paid-up license throughout the world to all such works to which he may assert or establish any claim under design patent or copyright laws.

3.9.1.5 Conflicts

Any conflicts, ambiguities, questions or problems encountered by the Design-Build Contractor in following the criteria shall be immediately submitted in writing to the Contracting Officer with the Design-Build Contractor's recommendations. Prior to submission to the Government the Design-Build Contractor shall take appropriate measures to obtain

clarification of design criteria requirements, to acquire all pertinent design information, and to incorporate such information in the work being performed.

3.9.1.6 Design Specialists

When a design specialist is required, the Design-Build Contractor shall submit for the approval by Contracting Officer, the name of the designated specialist along with the individual's educational background, experience, and licenses or registrations held, before design work commences. The design specialists shall be registered architects, registered professional engineers, or recognized consultants with a background of at least five (5) years design experience in the appropriate specialty. [Services of design specialists may be required for the following specialties:]

" Civil Engineer
" Architect
" Geotechnical Engineer
" Electrical Engineer
" Structural Engineer
" Mechanical Engineer
" Fire Protection Engineer

NOTE TO THE SPECIFICATION WRITER: Use of a Fire Protection design specialist is mandatory unless specially waived by the CEMED-EC-TB Fire Protection Engineer.

3.9.2 Conduct of Work

In the performance of contract the Design-Build contractor shall:

3.9.2.1 Performance

Perform the work diligently and aggressively, and promptly advise the Contracting Officer of all significant developments.

3.9.2.2 Telephone Conversations

Prepare a summary, and promptly furnish a copy thereof to the Contracting Officer, of all telephone conversations relating to the design work under this contract.

3.9.2.3 Cooperation with Others

Cooperate fully with other firms, consultants and contractors performing work under the program to which this contract pertains, upon being advised by the Contracting Officer that such firms or individuals have a legitimate interest in the program, have need-to-know status, and proper security clearance where required.

3.9.2.4 Technical Criteria

All designs, drawings, and specifications shall be prepared in accordance with the contract documents and with the applicable publications referenced therein. As soon as possible, the Design-Build Contractor shall obtain copies of all publications applicable to this contract. Availability of publications (where to purchase) is contained in Specification Section 01420 entitled: SOURCES FOR REFERENCE PUBLICATIONS. Any deviations from the technical criteria contained in the contract documents or in the applicable publications, including the use of criteria obtained from the user or other

sources, must receive prior approval of the Contracting Officer. Where the technical criteria contained or referred to herein is not met, the Design-Build Contractor will be required to conform his design to the same at his own time and expense.

3.9.3 Design Priorities

The design of this project shall consider the remote location and harsh environment of this project and the impact this will have on sources of technical supply, the cost of construction, the low level of maintenance, and the difficulty of obtaining replacement parts. Unless stated otherwise in this contract, the following design priorities shall be followed:

3.9.3.1 CONSTRUCTION LIFE-SPAN LEVELS

[Semi permanent Construction: Buildings and facilities shall be designed and constructed to serve a life expectancy of more than 5 years but less than 25 years, to be energy efficient, and to have finishes, materials, and systems that require a moderate degree of maintenance using the life-cycle cost approach.]

3.9.3.2 Operability

Systems including but not necessarily limited to mechanical, electrical, communications, etc., must be simple to operate and easy to maintain.

3.9.3.3 Standardization

Use of standardized materials, products, equipment, and systems is necessary to minimize the requirements for replacement parts, storage facilities, and service requirements.

3.9.3.4 Overseas Work (Not Used)

Use of construction materials or techniques which are suitable for overseas work in harsh climates and environments.

3.9.4 Topographic Surveys, Easements, and Utilities

Unless otherwise stated in the contract, the Design-Build Contractor will be responsible for detailed topographic mapping, available easements, and utility information for the project.

3.9.5 Geotechnical Investigation

Unless otherwise stated in the contract, the Design-Build Contractor will be responsible for Geotechnical investigation, including subsurface explorations, sampling, field and laboratory testing, and water studies where applicable.

3.9.6 Cathodic Protection and Earth Resistance

Unless otherwise stated in the contract, the Design-Build Contractor will be responsible for determining whether cathodic protection on buried structures and underground utility systems are needed for special electrical grounding and counterpoise systems, and for gathering the field data necessary for design.

3.9.7 Water Supply and Quality Data

Unless otherwise stated in the contract, the Design-Build Contractor will be responsible for obtaining all water supply and water quality data. This data will include information on the locations and depths of all viable water supply sources at the site(s) involved and a water quantity and water quality analysis for each source.

3.9.8 Occupational Safety and Health Act

The facilities, systems, and equipment designed under this contract shall comply with the Occupational Safety and Health Act (OSHA), Code of Federal Regulations, Title 29, Chapter XVII, Parts 1910 and 1926. Any problems in incorporating these standards due to conflicts with other technical criteria shall be submitted to the Contracting Officer for resolution.

3.9.9 Asbestos Containing Materials

Asbestos containing material (ACM) will not be used in the design of new structures or systems. In the event no other material is available which will perform the required function or where the use of other material would be cost prohibitive, a waiver for the use of asbestos containing materials must be obtained from CETAM.

3.9.9.1 Existing Construction

Asbestos containing materials (ACM) presently included in existing construction to be rehabilitated or otherwise modified as a result of this project, shall be removed and a non-asbestos containing material substituted in lieu thereof.

3.9.9.2 Suspected Asbestos Containing Materials

All such structures and systems shall be inspected to determine the presence or probable presence of ACM. When ACM is suspected, a documented survey will be performed. The survey will be developed into an abatement design and will be made a part of the design documents. In the event no other material is available which will perform the required function or the use of a substitute material would be cost prohibitive due to initial cost and tear-out of existing construction, a waiver for the retention of the asbestos containing material must be obtained from the Contracting Officer.

3.10 VALUE METHODOLOGY/VALUE ENGINEERING

The Design-Build Contractor during the course of his design shall be alert for and shall identify those high-cost low-value items or areas which he considers may be accomplished in different ways that will increase the value of the project at the same or less cost. Potential value engineering study items shall be reported to the Value Engineer through the Contracting Officer.

3.10.1 Performance Oriented Value Engineering Change Proposal (VECP)

In reference to Contract Clause 52.248-3, "Value Engineering -Construction", the Government may refuse to entertain a "Value Engineering Change Proposal" (VECP) for those "performance oriented" aspects of the Contract Documents which were addressed in the Design-Build Contractor's accepted contract proposal and which were evaluated in competition with other Proposers for award of this contract. For purposes of this clause, the term "performance oriented" refers to those aspects of the design criteria or other contract

requirements which allow the Proposer or the Design-Build Contractor certain latitude, choice of and flexibility to propose in its accepted contract offer a choice of design, technical approach, design solution, construction approach or other approach to fulfill the contract requirements. Such requirements generally tend to be expressed in terms of functions to be performed, performance required or essential physical characteristics, without dictating a specific process or specific design solution for achieving the desired result.

3.10.2 Prescriptive Oriented Value Engineering Change Proposal (VECP)
The Government may consider a VECP for those "prescriptive" aspects of the Solicitation documents, not addressed in the Design-Build Contractor's accepted contract proposal or addressed but evaluated only for minimum conformance with the Solicitation requirements. For purposes of this clause, the term "prescriptive" refers to those aspects of the design criteria or other Solicitation requirements wherein the Government expressed the design solution or other requirements in terms of specific materials, approaches, systems and/or processes to be used. Prescriptive aspects typically allow the Proposers little or no freedom in the choice of design approach, materials, fabrication techniques, methods of installation or other approach to fulfill the contract requirements.

3.11. SUBMITTAL OF CONTRACTOR FURNISHED DESIGN DOCUMENTS
The requirements of this paragraph pertain to the submittal of design documents, specifications, design calculations, surveys, testing reports and other documents prepared by the Design-Build Contractor to meet the design requirements of this project.
Contractor shall submit documents for each phase of submittals with the level of information as indicated in the MED Design Instructions Manual.
3.11.1. Geotechnical
The Contractor shall provide a project geotechnical report which shall be used for the basis of all design activities under this project.
3.11.2. Civil, Site Planning and Layout
3.11.2.1. Mapping
The surveyor shall provide a tabulated list (bound booklet) with adjusted coordinates and elevations of all permanent survey monuments established on the project. The surveyor shall complete and submit with field books, the field adjustments computation sheets. The surveyor shall complete and submit the final survey and mapping.
3.11.2.2. Design Analysis
The Design Analysis shall include, but not be limited to the following specific items:
a. Grading and Drainage. The design analysis shall include the run off calculations and criteria used in creating the site grading and profiles of the culverts.
b. The contractor shall provide manufacturer's catalog data and shop drawings for material and equipment to be installed on the project. The shop drawings shall include detail drawings to include fabrication and erection details, and structural connections.
c. Utility System - Not Used
d. Concrete pavement design and material selection criteria.
e. Site layout illustrating all proposed construction features.
3.11.2.3. Specifications
Specifications shall indicate applicable design standards and criteria followed, standards that the selected equipment and material shall comply with, method of equipment installation, and other construction requirements that the designer may see fit. The Contractor shall use the specifications and definitions provided in the Unified Facilities Guide Specifications (UFGS) to create the demolition, environmental, and any other site related

specification required. The Unified Facilities Guide Specifications (UFGS) and SPECSINMEDT software are available free of charge for downloading from http://www.ccb.org/ufgs/ufgs.htm. Where UFGS do not include a specification for a particular feature of work, a Federal Aviation FAA specification is available for a particular feature of work; the Contractor may use specifications from other agencies or sources, or provide custom-written specifications. Such specifications only may use another software program than SPECSINMEDT. The specifications for this project shall be edited and submitted in hand marked-up or graphic highlighted (via word processor or specification software) draft version at the Preliminary Review submittal stage.

UFGS shall be edited only as directed in the specification notes and instructions, where choice options allow, and where features of work are added or deleted. A minimum quality standard for the project shall be maintained by only selecting among the choices for quantity and quality that are presented in the applicable UFGS, unless specifically indicated otherwise in this section.

Manufacturer's catalog cut sheets will not be accepted as a substitute for the "products" portion of the specifications, nor any other part. Catalog cut sheets may be added to the specifications, but not as a substitute.

3.11.2.4. Construction Phasing Plan and Environmental Plan

Contractor shall provide the environmental plan prior to start of construction.

3.11.2.5. Drawings

The following specific items shall be shown on the drawings when applicable, for each submittal.

3.11.2.6. Civil Site Development

The plans shall include, but not be limited to the following:

a. Location plan showing the location of the existing structures and proposed site improvements on an overall plan of the entire base.

b. Site plan showing the coordinated horizontal location of the proposed structures, fences, walls, aprons, roadway, taxiways, and all other site improvements in relation to each other and existing site features. The Contractor provided topographic survey shall serve as the base map for the site plan.

c. Grading plan illustrating 0.25m contours showing the existing and proposed site grading and any surface or subsurface drainage facilities. Minimum drainage pipe slopes shall be 0.5%. Spot elevation at all pertinent locations including but not limited to grade breaks, stabilized surfaces, fence corners, building corners and entry control points will be included on the grading plan. All trenches shall have a maximum 4:1 side slope. Ground floor elevation for each structure will be included on the grading plan. The Contractor provided topographic survey at 0.25m contours shall serve as the base map for the grading plan.

d. Utility plan showing the coordinated location of the site utilities including electrical, fire, water and all other utility improvements in relation to each other and existing site utilities

e. Demolition Plan

f. Construction details providing sufficient detail to accurately construct the required site features.

g. Pavement Marking Plan

3.11.3. Architectural

The architectural shall be coordinated with all disciplines and shall include, but not be limited to, the following information:

3.11.3.1. Design Analysis

The Design Analysis shall include, but not be limited to the following specific items:

a. General summary of the work including overall description of the project scope.

b. Detailed Analysis including a description of the contents and construction of each individual building included in the project.
c. A Basis of Design including all references and standards used in the design and development of the project drawings and specifications.
d. A systems and finishes section including specific descriptions of each wall type, roof type, door type and floor system.
e. A list of each interior space included in the project (by building type) including a description of each wall type and finish.
f. A building Program including a list of each space (by building type) and the area of each space (in square meters).
g. Building Code and Construction Data for each building type.
h. AtMEDhments of calculations and diagrams as needed.

3.11.3.2. Specifications

Specifications shall indicate applicable design standards and criteria followed, standards that the selected equipment and material shall comply with, method of equipment installation, and other construction requirements that the designer may see fit. The Contractor shall use the specifications and definitions provided in the Unified Facilities Guide Specifications (UFGS) to create required specifications.

Manufacturer's catalog cut sheets will not be accepted as a substitute for the "products" portion of the specifications, nor any other part. Catalog cut sheets may be added to the specifications, but not as a substitute.

3.11.4. Structural

All structural analysis and calculations shall be submitted showing all calculations to document compliance with the design requirements and all codes. Each phase of submittals shall follow the submittal requirements as indicated in the MED Design Instructions Manual Chapter 8 Structural.

3.11.5. Heating, Ventilating, and Air-Conditioning (HVAC)

3.11.5.1 Design Analysis

Submit anHVAC design analysis showing information as specified below indicating compliance with the design requirements:

3.11.5.1.1 - Project Narrative - Detail design intent, codes and standards referenced and adhered to during design, and systems approach. Include explanatory notes covering all design rationale which would not be obvious to an engineer reviewing the analysis. Include all assumptions and rationale for their use.

3.11.5.1.2 - Calculations - Present detailed calculations showing rationale behind sizing and selection of all specified equipment. Include printouts of inputs and outputs from loads calculation programs, all ventilation rate calculations, all hand done energy use calculations and estimates. Include calculations for seismic and wind loading for all HVAC components justifying support details and specifications. Annotate all assumptions and code and other regulatory references.

3.11.5.1.3 - Catalog Cuts- Provide manufacturer's data sheets of all new basis of design equipment indicating the equipment selected. Include annotated model and sizing tables showing that selected equipment is appropriately sized and selected based on loads calculations and equipment available. The catalog cuts shall also indicate that the selected equipment will fit within the space allowed and that the equipment provided will operate within the local power limitations.

3.11.5.2 Specifications

Include complete division 23 specifications. Specifications shall indicate applicable design standards and criteria followed, standards that the selected equipment and material shall comply with, method of equipment installation, and other construction requirements that the designer may see fit. The Contractor shall use the specifications and definitions provided in the Unified Facilities Guide Specifications (UFGS) available from http://www.ccb.org/ufgs/ufgs.htm. as a design guide basis, edited as applicable to define the demolition and new HVAC / Mechanical work

requirements of this project. UFGS specifications shall be edited only as directed in the specification notes and instructions, where choice options allow, and where features of work are added or deleted. Where UFGS do not include an appropriate specification for a particular feature of the Work, the Contractor may use specifications from other agencies or sources, or provide custom-written specifications. A minimum quality standard for the project shall be maintained by only selecting among the choices for quantity and quality that are presented in the applicable UFGS, unless specifically indicated otherwise in this section. All custom specifications shall be consistent with the level of quality, quantity, and general format of the USGS and shall be edited as required avoiding conflict with any UFGS specification.

3.11.5.3 Drawings

3.11.5.3.1 - Floor Plans - Submit floor plans in an appropriate scale showing locations and quantities of all HVAC / mechanical components. Drawings shall have appropriate detail for the scale shown so as to be readable and have no text smaller than 2mm high. Where level of detail required for a system or subsystem is too small to be shown clearly on the general floor plans, create additional details at larger scale documenting required construction methodology.

3.11.5.3.2 - Details - Submit details of subassemblies as required clarifying construction required in congested areas and showing all components required of repetitive construction methodology. Where details for a construction method are expected, they shall be referenced on the floor plans by notation or other consistent callout.

3.11.5.3.3 - Sections - Submit section or elevation views where required, clarifying HVAC component configuration where details of proposed construction are concealed on plan views due to vertical overlap.

3.11.5.3.4 - Schedules - Submit schedules of all proposed systems subassemblies clearly identifying performance characteristics required, conforming to project requirements, coordinated with Design Analysis calculations and cut sheets, and cross-checked against and consistent with all other drawings of other disciplines.

3.11.5.3.5 - Controls Diagrams - Submit detail drawings showing all controls required for various components, subassemblies, and systems. Include schematic diagrams showing representations of system configuration with all required controls input and output points in a schematically correct relationship. Include detailed English language algorithms defining required sequences of operation for all components, including logical and sequential direction to be incorporated into controller programming for all operational modes including at least unoccupied period, warm-up / cool-down / purge at beginning of occupied period, and occupied period controls as applicable.

3.11.6. Plumbing - Not Used

3.11.7. Fire Protection

The fire protection design analysis shall be submitted showing calculations as specified below to indicate compliance with the design requirements. Catalog cuts of all equipment shall be provided indicating the equipment selected. The catalog cuts shall also indicate that the selected equipment will fit within the space allowed and that the equipment provided will operate within the local power limitations.

3.11.7.1. Detailed Calculations

Detailed calculations for sizing equipment, electric fire pumps, tanks, piping, sprinkler heads, fire hydrants, electrical power (including emergency generator) system involved in the design.

3.11.7.2. Other Information

Any other information or computations required to permit verification that the design complies with the design criteria, codes, and standards and is satisfactory for the intended purpose.

3.11.7.3. Catalog Cuts
As a minimum catalog cuts for all major items of equipment shall be submitted. Catalog cuts shall be a part of the design analysis.
3.11.7.4. Equipment Sizing
Equipment sizing calculations to support the selection of all equipment shall be shown in the design analysis.
3.11.7.5. Explanatory Notes
Explanatory notes shall be included in the design analysis covering all rationale for design which would not be obvious to an engineer reviewing the analysis. The Contractor shall review the prepared plans and specifications and determine that they are in accordance with this Section and all other criteria and instructions furnished by the Government. It will be the responsibility of the Contractor to coordinate the fire protection systems with the other trades involved in the building design and to eliminate interference between fire protection equipment and other components of the building.
3.11.8. Electrical
The Contractor shall follow the submittal requirements as specified herein and the applicable Design Submittal requirements as listed in the MED Design Instruction Manual, Section 14 or whichever is more stringent.
Follow these design submittal requirements for these approximate completion levels according to the RFP Contract instructions to verify conformance to the RFP requirements.
NOTE: Only supply those design submittals relating to the Contract requirements and options selected therein. If a lower submittal is not required then those items will be submitted in the next higher submittal completion %.
Design submittals shall have acomplete design with all layout and major design considerations, changed little from the 60-65% level. This submittal will essentially fill in the details missing from the 60-65% level and update the previous design submittals as needed. The project narrative descriping the project in detail and how it is intended to function should be completed. The specifications are complete. The Contractor can proceed with procurement of all materials and start construction from the 95-100% drawings.
3.11.8.1. Design Analysis
The Contractor must supply the described submittals for the following:
a. Project Narrative
Provide documentation for the design submittals if necessary.
Designer shall briefly discuss the distribution scheme throughout the Project, the description of the power source to be used and a constructability sequence for the electrical components including any temporary power needs.
Local Design or construction requirements in total conflict with the U.S. design standards, shall be discussed, and suggested acceptable solutions provided.
Items of significant importance missing from the Project scope of work that could have a detrimental effect on the design of the project as envisioned, if not included, shall also be discussed and justification provided for consideration by the Contracting Officer.
b. Load Calculations
Provide documentation for design submittals as needed.
Provide estimated Project electrical demand loads based on the Project's current level of design. Provide individual circuit loads, tabulated in volt-ampere or KVA for each panel board and switchboard. Provide known loads where available, otherwise use estimated loads per circuit.
The tabulations shall correspond to the panel schedules shown on the drawings. Loads shown shall be based upon the ratings of equipment shown on the drawings. Use of demand factors, load factors, growth factors, etc. shall

be clearly documented in their application.
Provide load calculations for government review for all new and existing CCRs affected by this project. Use Table 15-5, UFC 3-535-01.
c. Generator Sizing
d. CCR Sizing

e. Short Circuit Study
Provide documentation for the design submittals.
Complete a short circuit analysis for the power system(s) in this project. The analysis will consider alternate sources (generator and base power for example) to evaluate available fault currents, equipment ratings and coordination times. The Contractor will prove in the analysis, the systems will function in a safe manner and all protection devices will operate as intended for any anticipated fault condition with either minimal or maximum anticipated fault currents.
f. Cable Size
Provide all main feeder cable sizes for the design submittal.
Provide all cable sizes for the design submittals.
Provide cable sizing calculations to justify the sizes selected. Cable sizing calculation shall clearly indicate all load factors, ambient temperature derating factors and installation factors required for proper cable sizing. Recommended cable sizes and insulation type shall be clearly identified.
g. Voltage Drop
Provide documentation for the design submittals as needed.
Provide voltage-drop calculations based on the completed design configuration and loads identified in the load study. It would be preferable to see a load flow study using ETAP,Easypower , SKM or similar program to demonstrate the voltage levels at all light and load (bus) locations under full load conditions. The study shall address all feeders to the panel board level. Calculations shall also be provided for worst case branch circuits.
Voltage drop shall be limited to 5% maximum from the source (either source transformer or generator terminals) assuming the source bus voltage was at the nominal level, to the farthest load inside the facility from the main source low voltage terminals. The source voltage can be up to 2% below nominal allowing a further 3% drop maximum on the worst case secondary load for a total of 5% drop.
Revised calculations shall be provided when initial calculations indicate potential voltage drops in excess of criteria.
h. Lighting Analysis
Provide documentation for the design submittals.
Provide point-to-point foot-candle plans to show compliance with minimum light intensity of foot-candles as required by the specifications for a given area. Typical point-to-point foot-candle plans can be used for areas that have the same lights and layouts.
The Contractor shall provide the following as part of the lighting design and submittal requirements:
1. Provide point-to-point foot-candle plans to show compliance with minimum light intensity of foot-candles as required by the specifications for a given area. Typical point-to-point foot-candle plans can be used for areas that have the same lights and layouts.
2. Provide the exact manufacture and catalog number of the lighting fixture used for design, including the manufacture's name, address and phone number.

3. Provide a light fixture aiming detail showing vertical and horizontal aiming angles and a light fixture aiming table which displays vertical and horizontal aiming angles for each light fixture in the aircraft shelters.
4. Provide dimensions for lighting spacing within the aircraft shelters.
5. Provide light suspension design, by a structural engineer or utilize

vendor standard calculations to include all stresses.

i. Obstruction Lighting Requirements

Provide documentation for the 65% and 95-100% design submittals if needed.

Provide the basis for design of the runway edge lighting revisions and new spacings

Provide the spacing's for the new apron edge lighting

Provide manufacturer's data for the taxiway and edge lighting fixtures with all mounting accessories

Provide manufacturer's data for the CCR and lighting controls

The design submittals must show in the design analysis clearly if obstruction lighting is or is not required based on the facility elevations and locations from affected runways and other landing or takeoff zones.

j. Specifications

Provide a complete set of draft specifications for the design submittals.

Design-Build Contractor shall provide edited Unified Guide Specifications (UFGS) for each System provided in the design of the Project.

Specifications shall indicate applicable design standards and criteria followed, standards that the selected equipment and material shall comply with, method of equipment installation, and other construction requirements that the designer may see fit.

k. Catalog Cuts

Provide full documentation for the design submittal.

The design analysis shall include catalog cuts representing the type of equipment considered in the Project design (drawings and specifications) and shall include all major components of all electrical systems. Catalog cuts shall be provided for all major pieces of equipment supplied and utilized under this contract, such as generators, manual transfer switches, switchboards, panel boards, disconnects, light fixtures, recepMEDles/power outlets, etc.

The catalog cuts shall:

1. Demonstrate that the selected equipment fits within the dimensions allowed in the design, and is available in the ratings required.

2. Include the manufacturers name, address and the telephone number; rating and physical size of equipment; and the standard it meets, such as UL, BS, or DIN.

3. Identify equipment or devices specifically on a catalog cut which lists multiple items for equipment or devices selected by the designer.

l. Static Electricity Mitigation

Provide documentation for the design submittals.

As part of the design analysis the Contractor shall provide justification for either having or not having these mitigation measures Army TM 5-811-3/Airforce AFM 88-9 Chap 3.

m. Arc Flash

Provide report with the design submittals if needed.

Perform an Arc Flash Hazard Analysis study per the requirements of NFPA 70E and BS EN 61482-1-2:2007, or include existing published information for typical equipment similar to that to be used on this project, to determine Flash Hazard Boundaries and the Personal Protective Equipment (PPE) level needed and for warning sign requirements.

The warning signs shall include the Flash Hazard Boundary and the Personal Protective Equipment (PPE) required for working on equipment hot. (Reference NFPA 70 Article 110-16; NFPA 70E Article 130.3; and UFC 3-560-01, Electrical Safety, O & M).

Specific arc flash hazard sign requirements will be made based on the arc flash analysis of electrical equipment to be submitted by the Contractor.

n. Seismic

Provide documentation with the submittal.

Electrical equipment, facilities and all parts thereof shall be designed for the seismic requirements as defined by the International Building Code, IBC 2006 and UFC 3-310-01 as identified in the Structural Section. Contractor shall provide documentation to either show equipment compliance with this requirement or to show this requirement is not applicable for this location.

o. Identification Nameplates

Provide documentation with the design submittal

Major items of electrical equipment, such as the transformers, manholes, hand holes, panel boards, and load centers, shall be provided with identification nameplates.

Contractor shall submit a schedule of name plates for all electrical equipment for approval of the Contracting Officer prior to ordering.

p. Test Equipment Calibration Certificates

Provide documentation for approval prior to use, for test equipment used to document and verify installations as required in the Contract.

This documentation shall certify the calibration of test equipment and shall be acceptable to the Contracting officer. Failure to provide valid certification prior to use, could invalidate all test readings using non-certified equipment. This may include, but is not limited to, equipment used for the following types of readings:

1. Resistivity readings
2. Amperage readings
3. Voltage readings
4. Power (KW or KVA readings)
5. Lighting values
6. All in one electrical testing meters
7. Hi Pot Equipment

q. Design Checklist

Provide documentation with the design submittal.

The Contractor shall submit a verified and signed design checklist for all applicable electrical items based on the list given in the Appendix of the MED Design Instruction Manual.

3.11.9. Communications

3.11.9.1. Specifications

Designer shall provide separate specifications for each section to be provided under this contract. Specifications shall indicate applicable design standards and criteria followed, standards that the selected equipment and material shall comply with, method of equipment installation and other construction requirements that the designer may see fit.

3.11.9.2. Catalog Information

Catalog information shall be provided for all types of material and equipment to be installed under this contract. The information shall include the manufacturers name, address and telephone number and distributor is applicable. Equipment or devices selected by the designer shall be clearly identified on the catalog cut. Where equipment is required to meet the RUS specifications, an RUS listed stamp must be on the catalog cut and the equipment clearly identified on the proper page of the RUS IP344 with the part number of the proposed equipment identified. Examples of equipment/hardware include, but not limited to only these items required to have catalog cut sheets submitted is as follows:

a. PVC Conduit
b. Inner duct
c. Fiber and copper cable, inside and outside plant.
d. Handhole covers
e. Copper and fiber optic splice closures
f. Outlets and plates
g. Patch panels, patch cords
h. Any other type of hardware that is involved in installation,termination

or interface with existing components.
i. Grounding and bonding hardware, inside and outside plant.
j. Ladder rack and associated hardware
k. Relay racks and associated material
3.11.9.3. Qualifications
Contractor shall submit documentation for approval by MED, that verifies that the Contractor Design/Installation/Splicing personnel meet the requirements stated in the Design narrative. Delays caused by failure to meet this requirement shall not be attributed to the Government. Text
3.12. SUBMITTAL OF CONTRACTOR FURNISHED DESIGN DRAWINGS
Contractor shall submit documents for each phase of submittals with the level of information as indicated in the Middle East District Design Instructions Manual.
The following specific items shall be shown on the drawings when applicable, for each submittal.
3.12.1. Civil, Site Planning and Layout
a. Site Plan: The site plan shall show detailed geometric design of the site and utilities, including applicable dimensions of facilities, setbacks, etc.
b. Grading Plan: Grading plans shall show new and existing contours necessary to relate proposed facilities to existing facilities and/or terrain. A contour interval of 0.25 meters shall be used. Final contours shall be furnished to show the full scope of the project. Spot elevations shall be shown at the following locations and as required to complete the grading drawings:
1. Pertinent changes in longitudinal and transverse pavement grades.
2. All corners of asphalt pavement and concrete pavement joints.
3. Controlling elevations of ditches or drainage courses.
c. Utility Plans: The location of existing and proposed utility features such as tanks, pumps, hydrants, manholes, pipes, valves and size of each shall be shown on utility plans. Details of the utility systems shall be provided.
d. Demolition Plans: The demolition plans shall clearly delineate all existing features to be removed.
3.12.2 Architectural
a. Fully dimensional floor plan including all rooms, offices, utility closet(s). Each room or other building area shall be labeled with a Room Name, Room Number and area. Rooms intended to house aircraft or other equipment shall clearly indicate specific required clearances.
b. Fully dimensional elevations and sections. Elevations shall indicate finish types. Sections shall indicate ceiling heights as well as all required equipment clearances.
c. Fully dimensioned details including all specialty items, doors, windows, openings, stairs, etc.
d. Fully dimensioned reflective ceiling plan.
e. Additional architectural features typically included in design.
3.12.3 Structural
All structural drawings shall be submitted showing structural foundation, floor, wall and roof framing plans with sizing of typical members indicated. Drawings shall include typical sections and details showing the methods of framing. All design loads shall be shown on the drawings. Locations of joints and their details shall be provided on the drawings. Each phase of submittals shall follow the submittal requirements as indicated in the Middle East District Design Instructions Manual Chapter 8 Structural.
3.12.4 Plumbing - Not Used
3.12.5 Fire Protection and Life Safety
The plans shall include, but not be limited to the following:
a. Locations and arrangement of all fire portable protection equipment.
b. Layout of non-potable dedicated fire protection tanks, and all other

piping systems used in the building, including sections and details, especially of congested areas, etc.
c. Vertical control for horizontal runs of piping, etc. shall be clearly delineated on the drawings. The drawings, by sections, elevations, or notes, shall show vertical control of piping. The design shall ensure that sufficient vertical clear height has been provided.
d. Equipment Schedules. The final form of all equipment schedules which will be included in the project shall be shown with the equipment data filled in. Equipment schedules giving capacities, working temperatures and pressures, and other pertinent data necessary to give a clear and concise description of all equipment.
3.12.6 Electrical
Detail drawings shall be submitted based upon the completed design percentage required as described in the Electrical, General comments.
All information needed for the Contractor to build a complete electrical system without ambiguity, utilizing only the design drawings (and specifications) and the information contained on them shall be provided.
Drawing details shall include but are not limited to:
a. The one line diagram(s) showing device ratings based upon the design as documented in the design analysis.
b. Electrical equipment rooms, generator installations and other congested areas along with detail layout drawings showing panels, switches, recepMEDles, control panel and related devices on a floor level. Branch circuit designs shall be complete. Circuits shall be coordinated with design analysis data and panel schedules.
c. Conduit/cable routings for taxiway lighting, and apron lighting. The associated manholes or pullboxes shall also be detailed.
d. Special mounting requirements or unusual equipment connection requirements.
e. All area and special grounding requirements. All unusual grounding requirements shall be shown by reference to detail sheets.
f. Special construction details.
g. Lighting and power layouts, and routing of all types of cables. Home runs are acceptable for lighting and recepMEDle circuits.
h. Completed panel schedules.
3.12.7 Communications - Not Used

3.13 SUBMITTAL TIMELINE OF CONTRACTOR FURNISHED DESIGN DOCUMENTS AND DRAWINGS

3.13.1 The Contractor shall break the design package into constructible portions for submission to the Contracting Officer for acceptance. The design packages shall include the design documents and specifications and shall follow the Schedule of Design Submittals, below, as closely as practical. The Contractor shall show these activities in the construction schedule. Partial submissions of non-constructible packages are not acceptable.

3.13.2 Schedule of Design Submittals

3.13.2.1 Geo-technical [within 30 calendar days of NTP]

3.13.2.2 Civil, Site Planning and Layout [within 30 calendar days of NTP]

3.13.2.3 Water, Wastewater, and Solid Waste Systems [within 60 calendar days of NTP]

3.13.2.4 Architectural/Interior Design [within 60 calendar days of NTP]

3.13.2.5 Structural [within 75 calendar days of NTP]

3.13.2.6 Force Protection Design Procedures for the Protection of United States Forces [within 75 calendar days of NTP]

3.13.2.7 Fire Protection and Life Safety [within 90 calendar days of NTP]

3.13.2.8 Heating, Ventilating, and Air Conditioning [within 90 calendar days of NTP]

3.13.2.9 Plumbing [within 90 calendar days of NTP]

3.13.2.10 Special Mechanical Systems and Equipment [within 90 calendar days of NTP]

3.13.2.11 Electrical [within 120 calendar days of NTP]

3.13.2.12 Power Generation [within 90 calendar days of NTP]

3.13.2.13 Power Transmission and Distribution [within 90 calendar days of NTP]

3.13.2.14 Communications [within 120 calendar days of NTP]

3.13.2.15 Corrosion Prevention and Control [within 90 calendar days of NTP]

3.13.2.16 Renovation Design [within 90calendar days of NTP]

3.13.2.17 Accident Prevention and Safety [within 30 calendar days of NTP]

3.13.3 Final (100%) Design Submittal [within 120 calendar days of NTP]

Once all phases of design are complete and are considered "Acceptable for Release for Construction", The Contractor shall prepare a 100% All-Inclusive Complete Design Package both in accordance with the procedures outlined in 3.5.1. This shall be considered the final Design submittal.

3.14 GOVERNMENT ACCEPTED CONSTRUCTION SUBMITTALS (Required During Construction)

3.14.1 General

Since this contract requires that the drawings and specifications specify specific proprietary materials, equipment, systems, and patented processes by trade name, make, or catalog number, it is anticipated that construction shop drawings will primarily be limited to testing, construction plans (e.g., Contractor Quality Control, Accident Prevention, Resident Management System, Area Use, etc.), schedules (Project Schedule/Network Analysis), certificates of compliance, reports, records/statements and variations.

3.14.1.1 Variations

After design submittals have been reviewed and cleared for construction by the Contracting Officer, no submittal for the purpose of substituting materials, equipment, systems, and patented processes will be considered by the Government unless submitted in accordance with the paragraph entitled VARIATIONS.

3.14.1.2 Additional Shop Drawings and Submittals

In accordance with the paragraph entitled DESIGN DISCREPANCIES, the Government may request the Design-Build Contractor to provide additional shop drawing and submittal type data subsequent to completion of the design.

3.14.2 Incomplete Design

The Design-Build Contractor shall not use construction submittals as a means to supplant and/or supplement an incomplete design effort.

3.14.3 Government Approval of Construction Submittals

The approval of construction submittals by the Contracting Officer shall not be construed as a complete check, but will indicate only that the general method of design construction, materials, detailing and other information are satisfactory. Approval will not relieve the Design-Build Contractor of the responsibility for any error which may exist, as it is the sole responsibility of the Design-Build Contractor to certify that each submittal has been reviewed in detail and is in strict conformance with all the contract documents and design criteria referenced therein.

3.14.4 Submittals

Submittals (other than shop drawings) shall be limited to items such as Plans (e.g., Quality Control Plan, Accident Prevention Plan, Area Use Plan etc.),Certificates of Compliance, Installation Instructions, Manufacturer's Catalog Data, Descriptive Literature/Illustrations, Factory and Field Test Reports, Performance and Operational Test Data Reports, Records, Operation and Maintenance Manuals, and required variations.

3.14.5 Government Review
Upon completion of review of construction submittals requiring Government approval, the submittals will be identified as having received approval by being so stamped and dated. [Two(2)] copies of the submittal will be retained by the Contracting Officer.

3.15 FOR INFORMATION ONLY SUBMITTALS

These submittals shall be checked, stamped, signed and dated by the Design-Build Contractor's Quality Control Engineer, certifying that such submittal complies with the contract requirements. All Contractor submittals shall be subject to review by the Government at any time during the course of the contract. Any Contractor submittal found to contain errors or omissions shall be resubmitted as one requiring "approval". No adjustment for time or money will be allowed for corrections required as a result of noncompliance with plans or specifications. Normally submittals for information only will not be returned. Approval of the Contracting Officer is not required on information only submittals. These submittals will be used for information purposes. The Government reserves the right to require the Design-Build Contractor to resubmit any item found not to comply with the contract. This does not relieve the Design-Build Contractor from the obligation to furnish material conforming to the plans and specifications and will not prevent the Contracting Officer from requiring removal and replacement if nonconforming material is incorporated in the work.

3.16 ATTACHMENTS

The following attachments form an integral part of this specification:

ENG FORM 4025 -Transmittal of Shop Drawings, Equipment Data, Material

Samples, or Manufacturer's Certificate of Compliance (2 pages)

ENG FORM 4288 - Submittal Register

Figure 1 -Index Sheet Logo/Signature Block (A-E)

Figure 2 -Continuation Sheet Logo/Signature Block (A-E)

Figure 3 -Title Block for Continuation Sheets

Figure 4 -Revision Block

Figure 5 -Finished Format S

SECTION TABLE OF CONTENTS

DIVISION 01 - GENERAL REQUIREMENTS

SECTION 01 33 00

SUBMITTAL PROCEDURES

PART 1 GENERAL

1.1 DEFINITIONS
1.1.1 Submittal
1.1.2 Submittal Descriptions (SD)
1.1.3 Approving Authority
1.1.4 Work
1.2 SUBMITTALS
1.3 SUBMITTAL CLASSIFICATION
1.3.1 Government Approved
1.3.2 Information Only
1.4 APPROVED SUBMITTALS
1.5 DISAPPROVED SUBMITTALS
1.6 WITHHOLDING OF PAYMENT
1.7 GENERAL
1.8 SUBMITTAL REGISTER
1.9 SCHEDULING
1.10 TRANSMITTAL FORM (ENG FORM 4025)
1.11 SUBMITTAL PROCEDURES
1.11.1 Procedures
1.11.2 Variations
1.11.2.1 Considering Variations
1.11.2.2 Description of Variations
1.11.2.3 Warranting That Variations Are Compatible
1.12 CONTROL OF SUBMITTALS
1.13 GOVERNMENT APPROVED SUBMITTALS
1.14 INFORMATION ONLY SUBMITTALS
1.15 STAMPS

PART 2 PRODUCTS

PART 3 EXECUTION

-- End of Section Table of Contents --

SECTION 01 33 00

SUBMITTAL PROCEDURES

PART 1 GENERAL

1.1 DEFINITIONS

1.1.1 Submittal

Contract Clauses "FAR 52.236-5, Material and Workmanship," paragraph (b) and "FAR 52.236-21, Specifications and Drawings for Construction," paragraphs (d), (e), and (f) apply to all "submittals."

1.1.2 Submittal Descriptions (SD)

Submittals requirements are specified in the technical sections. Submittals are identified by SD numbers and titles as follows.

SD-01 Preconstruction Submittals

Certificates of insurance.
Surety bonds.
List of proposed subcontractors.
List of proposed products.
Construction Progress Schedule.
Submittal register.
Schedule of prices.
Health and safety plan.
Work plan.
Quality control plan.
Environmental protection plan.

SD-06 Test Reports

Report signed by authorized official of testing laboratory that a material, product or system identical to the material, product or system to be provided has been tested in accord with specified requirements. (Testing must have been within three years of date of contract award for the project.)

Report which includes findings of a test required to be performed by the Contractor on an actual portion of the work or prototype prepared for the project before shipment to job site.

Report which includes finding of a test made at the job site or on sample taken from the job site, on portion of work during or after installation.

Investigation reports.

Daily checklists.

Final acceptance test and operational test procedure.

SD-07 Certificates

Statements printed on the manufacturer's letterhead and signed by responsible officials of manufacturer of product, system or material attesting that product, system or material meets specification requirements. Must be dated after award of project contract and clearly name the project.

Document required of Contractor, or of a supplier, installer or subcontractor through Contractor, the purpose of which is to further quality of orderly progression of a portion of the work by documenting procedures, acceptability of methods or personnel qualifications.

Confined space entry permits.

Text of posted operating instructions.

SD-11 Closeout Submittals

Documentation to record compliance with technical or administrative requirements or to establish an administrative mechanism.

1.1.3 Approving Authority

Office authorized to approve submittal.

1.1.4 Work

As used in this section, on- and off-site construction required by contract documents, including labor necessary to produce submittals, construction, materials, products, equipment, and systems incorporated or to be incorporated in such construction.

1.2 SUBMITTALS

Government approval is required for submittals with a "G" designation; submittals not having a "G" designation are for information only or as otherwise designated. When used, a designation following the "G" designation identifies the office that will review the submittal for the Government. The following shall be submitted in accordance with Section 01 33 00 SUBMITTAL PROCEDURES:

SD-01 Preconstruction Submittals

Submittal register; G RE

1.3 SUBMITTAL CLASSIFICATION

Submittals are classified as follows:

1.3.1 Government Approved

Government approval is required for extensions of design, critical materials, variations, equipment whose compatibility with the entire system must be checked, and other items as designated by the Contracting Officer. Government approval is required for any variations from the Solicitation or Accepted Proposal and other items as designated by the Contracting Officer. Within the terms of the Contract Clause entitled "Specifications

and Drawings for Construction," they are considered to be "shop drawings."

1.3.2 Information Only

All submittals not requiring Government approval will be for information only. All submittals not requiring Government approval will be for information only. They are not considered to be "shop drawings" within the terms of the Contract Clause referred to above.
All submittals not requiring Government approval will be for information only. They are not considered to be "shop drawings" within the terms of the Contract Clause referred to above.

1.4 APPROVED SUBMITTALS

The Contracting Officer's approval of submittals shall not be construed as a complete check, but will indicate only that the general method of construction, materials, detailing and other information are satisfactory. Approval will not relieve the Contractor of the responsibility for any error which may exist, as the Contractor under the Contractor Quality Control (CQC) requirements of this contract is responsible for dimensions, the design of adequate connections and details, and the satisfactory construction of all work. After submittals have been approved by the Contracting Officer, no resubmittal for the purpose of substituting materials or equipment will be considered unless accompanied by an explanation of why a substitution is necessary.

1.5 DISAPPROVED SUBMITTALS

The Contractor shall make all corrections required by the Contracting Officer and promptly furnish a corrected submittal in the form and number of copies specified for the initial submittal. The Contractor shall make all corrections required by the Contracting Officer, and promptly furnish a corrected submittal in the form and number of copies specified for the initial submittal. Any "information only" submittal found to contain errors or unapproved variations from the Solicitation or Accepted Proposal shall be resubmitted as one requiring "approval" action, requiring Government approval. If the Contractor considers any correction indicated on the submittals to constitute a change to the contract, a notice in accordance with the Contract Clause "Changes" shall be given promptly to the Contracting Officer.

1.6 WITHHOLDING OF PAYMENT

Payment for materials incorporated in the work will not be made if required approvals have not been obtained. No payment for materials incorporated in the work will be made if all required required Government approvals have not been obtained. No payment will be made for any materials incorporated into the work for any conformance review submittals or information only submittals found to contain errors or variations from the Solicitation or Accepted Proposal.

1.7 GENERAL

The Contractor shall make submittals as required by the specifications. The Contracting Officer may request submittals in addition to those specified when deemed necessary to adequately describe the work covered in the respective sections. Units of weights and measures used on all submittals shall be the same as those used in the contract drawings. Each submittal shall be complete and in sufficient detail to allow ready

determination of compliance with contract requirements. Prior to submittal, all items shall be checked and approved by the Contractor's Quality Control (CQC) System Manager Quality Control (CQC) System Manager and each item shall be stamped, signed, and dated by the CQC System Manager indicating action taken. Proposed variations from the contract requirements shall be clearly identified. Submittals shall include items such as: Contractor's, manufacturer's, or fabricator's drawings; descriptive literature including (but not limited to) catalog cuts, diagrams, operating charts or curves; test reports; test cylinders; samples; O&M manuals (including parts list); certifications; warranties; and other such required submittals. Submittals requiring Government approval shall be scheduled and made prior to the acquisition of the material or equipment covered thereby. Samples remaining upon completion of the work shall be picked up and disposed of in accordance with manufacturer's MSDS and in compliance with existing laws and regulations.

1.8 SUBMITTAL REGISTER

At the end of this section is a submittal register showing items of equipment and materials for which submittals are required by the specifications; this list may not be all inclusive and additional submittals may be required. The Contractor shall maintain a submittal register for the project in accordance with Section 01 45 02.00 10 QUALITY CONTROL SYSTEM (QCS). Thereafter, the Contractor shall maintain a complete list of all submittals, including completion of all data columns. Dates on which submittals are received and returned by the Government will be included in its export file to the Contractor. The Contractor shall track all submittals.

The Contractor is required to complete the submittal register and submit it to the Contracting Officer for approval within 30 calendar days after Notice to Proceed. The approved submittal register will serve as a scheduling document for submittals and will be used to control submittal actions throughout the contract period. The submit dates and need dates used in the submittal register shall be coordinated with dates in the Contractor prepared progress schedule. Updates to the submittal register showing the Contractor action codes and actual dates with Government action codes and actual dates shall be submitted monthly or until all submittals have been satisfactorily completed. When the progress schedule is revised, the submittal register shall also be revised and both submitted for approval.

1.9 SCHEDULING

Submittals covering component items forming a system or items that are interrelated shall be scheduled to be coordinated and submitted concurrently. Certifications to be submitted with the pertinent drawings shall be so scheduled. Adequate time (a minimum of seven (7) calendar days exclusive of mailing time) shall be allowed and shown on the register for review and approval. No delay damages or time extensions will be allowed for time lost in late submittals. An additional seven (7) calendar days shall be allowed and shown on the register for review and approval of submittals for refrigeration and HVAC control systems

For submittals requiring review by fire protection engineer, allow review period, beginning when Government receives submittal from QC organization, of 20 working days for return of submittal to the Contractor. Period of review for each resubmittal is the same as for initial submittal.

1.10 TRANSMITTAL FORM (ENG FORM 4025)

The sample transmittal form (ENG Form 4025) attached to this section shall be used for submitting both Government approved and information only submittals in accordance with the instructions on the reverse side of the form. These forms are included in the QCS software that the Contractor is required to use for this contract. This form shall be properly completed by filling out all the heading blank spaces and identifying each item submitted. Special care shall be exercised to ensure proper listing of the specification paragraph and/or sheet number of the contract drawings pertinent to the data submitted for each item.

1.11 SUBMITTAL PROCEDURES

Submittals shall be made as follows:

1.11.1 Procedures

a. Submittals designated as "MED" on the Submittal Register (ENG Form 4288) shall be submitted in four (4) copies to U.S. Army Corps of Engineers, Middle East District at the address provided below:

(1) DHL, FEDEX, UPS or any other courier service:

U.S. Army Corps of Engineers
Middle East Ditrict (CETAM-CD-Q Attn: J. Funkhouser)
201 Prince Frederick Drive
Winchester, VA 22602

(2) U.S. Postal Service:

U.S. Army Corps of Engineers
Middle East District (CETAM-CD-Q Attn: J. Funkhouser)
P.O. Box 2250
Winchester, VA 22604-1450

b. Submittals designated as "RE" on the Submittal Register (ENG Form 4288) shall be submitted in four (4) copies to the Resident Engineer Office at the following address:

U.S. Army Corps of Engineers
Afghanistan Engineer District
FOB Sharana APO AE 09311

d. Submittals of operation and maintenance manuals in dive (5) copies shall be submitted in to the Resident Engineer Office at the following address:

U.S. Army Corps of Engineers
Afghanistan Engineer District
FOB Sharana APO AE 09311

The Government will further discuss detailed submittal procedures with the Contractor at the Preconstruction Conference.

1.11.2 Variations

Variations from contract requirements require Government approval pursuant to contract Clause entitled "FAR 52.236-21, Specifications and Drawings for

Construction" and will be considered where advantageous to Government.

1.11.2.1 Considering Variations

Discussion with Contracting Officer prior to submission, will help ensure functional and quality requirements are met and minimize rejections and resubmittals.

1.11.2.2 Description of Variations

If construction submittals show variations from the contract parameters/requirements, the Contractor shall describe such variations in writing, at the time of submission. Additionally, the Contractor shall also annotate block "h" entitled "variation" of ENG FORM 4025. If the Government review detects any items not in compliance with contract requirements or items requiring further clarification, the Contractor will be so advised. Lack of notification by the Contracting Officer of any non-complying item does not relieve the Contractor of any contractual obligation. The Contractor shall justify all design variation requests by providing the following minimum information:

a. Reason or purpose for proposed variation, substitution, or revision.

b. How does quality of variation compare with quality of the specified item. This shall be in the form of a technical evaluation tabulating differences between the item originally specified and what is proposed.

c. Provide a cost comparison. This shall include an acquisition and life cycle cost comparison.

d. For proprietary materials, products, systems, and patented processes a certification signed by an official authorized to certify in behalf of the manufacturing company that the proposed substitution meets or exceeds what was originally specified.

e. For all other actions, a certification signed by a licensed professional engineer or architect certifying that the proposed variation or revision meets or exceeds what was originally specified.

f. Advantage to the Government, if variation is approved, i.e. Operation and Maintenance considerations, better product, etc.

g. Ramifications and impact, if not approved.

1.11.2.3 Warranting That Variations Are Compatible

When delivering a variation for approval, Contractor warrants that this contract has been reviewed to establish that the variation, if incorporated, will be compatible with other elements of work.

1.12 CONTROL OF SUBMITTALS

The Contractor shall carefully control his procurement operations to ensure that each individual submittal is made on or before the Contractor scheduled submittal date shown on the approved "Submittal Register."

1.13 GOVERNMENT APPROVED SUBMITTALS

Upon completion of review of submittals requiring Government approval, the

submittals will be identified as having received approval by being so stamped and dated. Two (2) copies of the submittal will be retained by the Contracting Officer and two (2) copies of the submittal will be returned to the Contractor.

1.14 INFORMATION ONLY SUBMITTALS

Normally submittals for information only will not be returned. Approval of the Contracting Officer is not required on information only submittals. The Government reserves the right to require the Contractor to resubmit any item found not to comply with the contract. This does not relieve the Contractor from the obligation to furnish material conforming to the plans and specifications; will not prevent the Contracting Officer from requiring removal and replacement of nonconforming material incorporated in the work; and does not relieve the Contractor of the requirement to furnish samples for testing by the Government laboratory or for check testing by the Government in those instances where the technical specifications so prescribe.

1.15 STAMPS

Stamps used by the Contractor on the submittal data to certify that the submittal meets contract requirements shall be similar to the following:

CONTRACTOR

(Firm Name)

_____ Approved

_____ Approved with corrections as noted on submittal data and/or attached sheets(s).

SIGNATURE: _____

TITLE: _____

DATE: _____

PART 2 PRODUCTS

Not used.

PART 3 EXECUTION

Not used.

-- End of Section --

SECTION TABLE OF CONTENTS

DIVISION 01 - GENERAL REQUIREMENTS

SECTION 01 35 26

GOVERNMENTAL SAFETY REQUIREMENTS

PART 1 GENERAL

1.1 REFERENCES
1.2 SUBMITTALS
1.3 DEFINITIONS
1.4 REGULATORY REQUIREMENTS
1.5 SITE QUALIFICATIONS, DUTIES AND MEETINGS
1.5.1 Personnel Qualifications
1.5.1.1 Site Safety and Health Officer (SSHO)
1.5.1.2 Competent Person for Confined Space Entry
1.5.1.3 Crane Operators
1.5.2 Personnel Duties
1.5.2.1 Site Safety and Health Officer (SSHO)
1.5.2.2 [Enter Appropriate Subpart Title Here]
1.5.3 Meetings
1.5.3.1 Preconstruction Conference
1.5.3.2 Safety Meetings
1.6 ACCIDENT PREVENTION PLAN (APP)
1.6.1 EM 385-1-1 Contents
1.7 ACTIVITY HAZARD ANALYSIS (AHA)
1.8 DISPLAY OF SAFETY INFORMATION
1.9 SITE SAFETY REFERENCE MATERIALS
1.10 EMERGENCY MEDICAL TREATMENT
1.11 REPORTS
1.11.1 Accident Reports
1.11.2 Accident Notification
1.11.3 Crane Reports
1.11.4 Certificate of Compliance
1.12 HOT WORK
1.13 RADIATION SAFETY REQUIREMENTS (When Applicable)
1.14 FACILITY OCCUPANCY CLOSURE
1.15 SEVERE STORM PLAN

PART 2 PRODUCTS

2.1 CONFINED SPACE SIGNAGE
2.2 FALL PROTECTION ANCHORAGE

PART 3 EXECUTION

3.1 CONSTRUCTION AND/OR OTHER WORK
3.1.1 Hazardous Material Use
3.1.2 Hazardous Material Exclusions
3.1.3 Unforeseen Hazardous Material
3.2 PRE-OUTAGE COORDINATION MEETING
3.3 CONTROL OF HAZARDOUS ENERGY (LOCKOUT/TAGOUT)

3.3.1 Tag Placement
3.3.2 Tag Removal
3.4 FALL HAZARD PROTECTION AND PREVENTION PROGRAM
3.4.1 Training
3.4.2 Fall Protection Equipment and Systems
3.4.2.1 Personal Fall Arrest Equipment
3.4.3 Fall Protection for Roofing Work
3.4.4 Existing Anchorage
3.4.5 Horizontal Lifelines
3.4.6 Guardrails and Safety Nets
3.4.7 Rescue and Evacuation Procedures
3.5 PPE
3.6 SCAFFOLDING
3.7 EQUIPMENT
3.7.1 Material Handling Equipment
3.7.2 Weight Handling Equipment
3.7.3 Equipment and Mechanized Equipment
3.7.4 USE OF EXPLOSIVES
3.8 EXCAVATIONS
3.8.1 Utility Locations
3.8.2 Utility Location Verification
3.8.3 Shoring Systems
3.8.4 Trenching Machinery
3.9 UTILITIES WITHIN CONCRETE SLABS
3.10 ELECTRICAL
3.10.1 Conduct of Electrical Work
3.10.2 Portable Extension Cords
3.11 WORK IN CONFINED SPACES

-- End of Section Table of Contents --

SECTION 01 35 26

GOVERNMENTAL SAFETY REQUIREMENTS

PART 1 GENERAL

1.1 REFERENCES

The publications listed below form a part of this specification to the extent referenced. The publications are referred to within the text by the basic designation only.

AMERICAN SOCIETY OF SAFETY ENGINEERS (ASSE/SAFE)

ASSE/SAFE A10.32	(2004) Fall Protection
ASSE/SAFE A10.34	(2001; R 2005) Protection of the Public on or Adjacent to Construction Sites
ASSE/SAFE Z359.1	(2007) Safety Requirements for Personal Fall Arrest Systems, Subsystems and Components

ASME INTERNATIONAL (ASME)

ASME B30.22	(2010) Articulating Boom Cranes
ASME B30.3	(2009) Tower Cranes
ASME B30.5	(2007) Mobile and Locomotive Cranes

NATIONAL FIRE PROTECTION ASSOCIATION (NFPA)

NFPA 10	(2010) Standard for Portable Fire Extinguishers
NFPA 241	(2009) Standard for Safeguarding Construction,Alteration, and Demolition Operations
NFPA 51B	(2009; TIA 09-1) Standard for Fire Prevention During Welding, Cutting, and Other Hot Work
NFPA 70	(2011; TIA 11-1; Errata 2011) National Electrical Code
NFPA 70E	(2009; Errata 09-1) Standard for Electrical Safety in the Workplace

U.S. ARMY CORPS OF ENGINEERS (USACE)

EM 385-1-1	(2008; Errata 1-2010; Changes 1-3 2010; Changes 4-6 2011) Safety and Health

Requirements Manual

U.S. NATIONAL ARCHIVES AND RECORDS ADMINISTRATION (NARA)

10 CFR 20	Standards for Protection Against Radiation
29 CFR 1910	Occupational Safety and Health Standards
29 CFR 1910.146	Permit-required Confined Spaces
29 CFR 1915	Confined and Enclosed Spaces and Other Dangerous Atmospheres in Shipyard Employment
29 CFR 1926	Safety and Health Regulations for Construction
29 CFR 1926.500	Fall Protection

1.2 SUBMITTALS

Government approval is required for submittals with a "G" designation; submittals not having a "G" designation are for information only. When used, a designation following the "G" designation identifies the office that will review the submittal for the Government. Submit the following in accordance with Section 01 33 00 SUBMITTAL PROCEDURES:

Government acceptance is required for submittals with a "G, A" designation.

SD-01 Preconstruction Submittals

Accident Prevention Plan (APP); G, RE

Activity Hazard Analysis (AHA); G, RE

Crane Critical Lift Plan; G, RE

Proof of qualification for Crane Operators; G, RE

SD-06 Test Reports

Reports

Submit reports as their incidence occurs, in accordance with the requirements of the paragraph entitled, "Reports."

Accident Reports

Crane Reports

SD-07 Certificates

Confined Space Entry Permit

Hot work permit

License Certificates

1.3 DEFINITIONS

a. Competent Person for Fall Protection. A person who is capable of identifying hazardous or dangerous conditions in the personal fall arrest system or any component thereof, as well as their application and use with related equipment, and has the authority to take prompt corrective measures to eliminate the hazards of falling.

b. High Visibility Accident. Any mishap which may generate publicity and/or high visibility.

c. Medical Treatment. Treatment administered by a physician or by registered professional personnel under the standing orders of a physician. Medical treatment does not include first aid treatment even through provided by a physician or registered personnel.

d. Operating Envelope. The area surrounding any crane. Inside this "envelope" is the crane, the operator, riggers and crane walkers, rigging gear between the hook and the load, the load and the crane's supporting structure (ground, rail, etc.).

e. Recordable Injuries or Illnesses. Any work-related injury or illness that results in:

(1) Death, regardless of the time between the injury and death, or the length of the illness;

(2) Days away from work (any time lost after day of injury/illness onset);

(3) Restricted work;

(4) Transfer to another job;

(5) Medical treatment beyond first aid;

(6) Loss of consciousness; or

(7) A significant injury or illness diagnosed by a physician or other licensed health care professional, even if it did not result in (1) through (6) above.

f. "USACE" property and equipment specified in USACE EM 385-1-1 should be interpreted as Government property and equipment.

1.4 REGULATORY REQUIREMENTS

In addition to the detailed requirements included in the provisions of this contract, comply with the most recent addition of USACE EM 385-1-1, and the following host nation laws, ordinances, criteria, rules and regulations . Submit matters of interpretation of standards to the appropriate administrative agency for resolution before starting work. Where the requirements of this specification, applicable laws, criteria, ordinances, regulations, and referenced documents vary, the most stringent requirements

govern.

1.5 SITE QUALIFICATIONS, DUTIES AND MEETINGS

1.5.1 Personnel Qualifications

1.5.1.1 Site Safety and Health Officer (SSHO)

The contractor shall provide a Safety oversight team that includes a minimum of one (1) Competent Person at each project site to function as the Safety and Health Officer (SSHO). The SSHO shall be at the work site at all times, unless specified differently in the contract, to perform safety and occupational health management, surveillance, inspections, and safety enforcement for the Contractor, and their training, experience, and qualifications shall be as required by EM 385-1-1 paragraph 01.A.17 and all associated sub-paragraphs. A Competent Personal shall be provided for all of the hazards identified in the Contractor's Safety and Health Program in accordance with the accepted Accident Prevention Plan, and shall be on-site at all times when the work that presents the hazards associated with their professional expertise is being performed. The credentials of the Competent Persons(s) shall be approved by the Contracting Officer in consultation with the Safety Office.

The Contractor Quality Control (QC) person cannot be the SSHO on this project, even though the QC has safety inspection responsibilities as part of the QC duties.

1.5.1.2 Competent Person for Confined Space Entry

Provide a competent person for confined space meeting the definition and requirements of EM 385-1-1.

NFPA 306, OSHA 29 CFR 1915, Subpart B, "Confined and Enclosed Spaces and Other Dangerous Atmospheres in Shipyard Employment" or as applicable, 1910.147 for general industry.

1.5.1.3 Crane Operators

Meet the crane operators requirements in USACE EM 385-1-1, Section 16 and Appendix I. In addition, for mobile cranes with Original Equipment Manufacturer (OEM) rated capacitates of 50,000 pounds or greater, designate crane operators as qualified by a source that qualifies crane operators (i.e., union, a government agency, or and organization that tests and qualifies crane operators). Provide proof of current qualification.

1.5.2 Personnel Duties

1.5.2.1 Site Safety and Health Officer (SSHO)

a. Conduct daily safety and health inspections and maintain a written log which includes area/operation inspected, date of inspection, identified hazards, recommended corrective actions, estimated and actual dates of corrections. Attach safety inspection logs to the Contractors' daily quality control report.

b. Conduct mishap investigations and complete required reports. Maintain the OSHA Form 300 and Daily Production reports for prime and

sub-contractors.

c. Maintain applicable safety reference material on the job site.

d. Attend the pre-construction conference, pre-work meetings including preparatory inspection meeting, and periodic in-progress meetings.

e. Implement and enforce accepted APPS and AHAs.

f. Maintain a safety and health deficiency tracking system that monitors outstanding deficiencies until resolution. Post a list of unresolved safety and health deficiencies on the safety bulletin board.

g. Ensure sub-contractor compliance with safety and health requirements.

Failure to perform the above duties will result in dismissal of the superintendent, QC Manager, and/or SSHO, and a project work stoppage. The project work stoppage will remain in effect pending approval of a suitable replacement.

h. Maintain a list of hazardous chemicals on site and their material safety data sheets.

1.5.2.2 [Enter Appropriate Subpart Title Here]

1.5.3 Meetings

1.5.3.1 Preconstruction Conference

a. Contractor representatives who have a responsibility or significant role in accident prevention on the project shall attend the preconstruction conference. This includes the project superintendent, site safety and health officer, quality control supervisor, or any other assigned safety and health professionals who participated in the development of the APP (including the Activity Hazard Analyses (AHAs) and special plans, program and procedures associated with it).

b. Discuss the details of the submitted APP to include incorporated plans, programs, procedures and a listing of anticipated AHAs that will be developed and implemented during the performance of the contract. This list of proposed AHAs will be reviewed at the conference and an agreement will be reached between the Contractor and the Contracting Officer's representative as to which phases will require an analysis. In addition, establish a schedule for the preparation, submittal, review, and acceptance of AHAs to preclude project delays.

c. Deficiencies in the submitted APP will be brought to the attention of the Contractor at the preconstruction conference, and the Contractor shall revise the plan to correct deficiencies and re-submit it for acceptance. Do not begin work until there is an accepted APP.

d. The functions of a Preconstruction conference may take place at the Post-Award Kickoff meeting for Design Build Contracts.

1.5.3.2 Safety Meetings

Conduct and document meetings as required by EM 385-1-1. Attach minutes showing contract title, signatures of attendees and a list of topics discussed to the Contractors' daily quality control report.

1.6 ACCIDENT PREVENTION PLAN (APP)

Use a qualified person to prepare the written site-specific APP. Prepare the APP in accordance with the format and requirements of USACE EM 385-1-1 and as supplemented herein. Cover all paragraph and subparagraph elements in USACE EM 385-1-1, Appendix A, "Minimum Basic Outline for Accident Prevention Plan". Specific requirements for some of the APP elements are described below. The APP shall be job-specific and address any unusual or unique aspects of the project or activity for which it is written. The APP shall interface with the Contractor's overall safety and health program. Include any portions of the Contractor's overall safety and health program referenced in the APP in the applicable APP element and made site-specific. The Government considers the Prime Contractor to be the "controlling authority" for all work site safety and health of the subcontractors. Contractors are responsible for informing their subcontractors of the safety provisions under the terms of the contract and the penalties for noncompliance, coordinating the work to prevent one craft from interfering with or creating hazardous working conditions for other crafts, and inspecting subcontractor operations to ensure that accident prevention responsibilities are being carried out. The APP shall be signed by the person and firm (senior person or Individual) preparing the APP,the on-site superintendent, the designated site safety and health officer, and the Contractor Quality control Manager

Submit the APP to the Contracting Officer 15 calendar days prior to the date of the preconstruction conference for acceptance. Work cannot proceed without an accepted APP.

Once accepted by the Contracting Officer, the APP and attachments will be enforced as part of the contract. Disregarding the provisions of this contract or the accepted APP will be cause for stopping of work, at the discretion of the Contracting Officer, until the matter has been rectified.

Once work begins, changes to the accepted APP shall be made with the knowledge and concurrence of the Contracting Officer, project superintendent, SSHO and quality control manager. Should any severe hazard exposure, i.e. imminent danger, become evident, stop work in the area, secure the area, and develop a plan to remove the exposure and control the hazard. Notify the Contracting Officer within 24 hours of discovery. Eliminate/remove the hazard. In the interim, take all necessary action to restore and maintain safe working conditions in order to safeguard onsite personnel, visitors, the public (as defined by ASSE/SAFE A10.34,) and the environment.

Copies of the accepted plan will be maintained at the resident engineer's office and at the job site.
Continuously reviewed and amended the APP, as necessary, throughout the life of the contract. Incorporate unusual or high-hazard activities not identified in the original APP as they are discovered.

1.6.1 EM 385-1-1 Contents

In addition to the requirements outlines in Appendix A of USACE EM 385-1-1, the following is required:

a. Names and qualifications (resumes including education, training, experience and certifications) of all site safety and health personnel designated to perform work on this project to include the designated

site safety and health officer and other competent and qualified personnel to be used such as CSPs, CIHs, STSs, CHSTs. Specify the duties of each position.

b. Qualifications of competent and of qualified persons. As a minimum, designate and submit qualifications of competent persons for each of the following major areas: excavation; scaffolding; fall protection; hazardous energy; confined space; health hazard recognition, evaluation and control of chemical, physical and biological agents; personal protective equipment and clothing to include selection, use and maintenance.

c. Confined Space Entry Plan. Develop a confined and/or enclosed space entry plan in accordance with USACE EM 385-1-1, applicable OSHA standards 29 CFR 1910, 29 CFR 1915, and 29 CFR 1926, OSHA Directive 2.100, and local regulatory requirements identified in this contract. Identify the qualified person's name and qualifications, training, and experience. Delineate the qualified person's authority to direct work stoppage in the event of hazardous conditions. Include procedure for rescue by contractor personnel and the coordination with emergency responders. (If there is no confined space work, include a statement that no confined space work exists and none will be created.)

d. Crane Critical Lift Plan. Prepare and sign weight handling critical lift plans for lifts over 75 percent of the capacity of the crane or hoist at any radius of lift; lifts involving more than one crane or hoist; lifts of personnel; and lifts involving non-routine rigging or operation, sensitive equipment, or unusual safety risks. Submit 15 calendar days prior to on-site work and include the requirements of USACE EM 385-1-1, paragraph 16.H. and the following:

(1) For lifts of personnel, demonstrate compliance with the requirements of 29 CFR 1926.550(g).

e. Fall Protection and Prevention (FP&P) Program Documentation. The program documentation shall be site specific and address all fall hazards in the work place and during different phases of construction. Address how to protect and prevent workers from falling to lower levels when they are exposed to fall hazards above 6 feet. A qualified person for fall protection shall prepare and sign the program documentation. Include fall protection and prevention systems, equipment and methods employed for every phase of work, responsibilities, assisted rescue, self-rescue and evacuation procedures, training requirements, and monitoring methods. Revise the Fall Protection and Prevention Program documentation every six months for lengthy projects, reflecting any changes during the course of construction due to changes in personnel, equipment, systems or work habits. Keep and maintain the accepted Fall Protection and Prevention Program documentation at the job site for the duration of the project. Include the Fall Protection and Prevention Program documentation in the Accident Prevention Plan (APP).

f. Occupant Protection Plan. The safety and health aspects of lead-based paint removal, prepared in accordance with Section 02 82 16.00 20 LEAD BASED PAINT HAZARD ABATEMENT, TARGET HOUSING & CHILD OCCUPIED FACILITIES 02 82 33.13 20 REMOVAL AND DISPOSAL OF LEAD CONTAINING PAINT.(When Applicable)

g. Lead Compliance Plan. The safety and health aspects of lead work, prepared in accordance with Section 02 83 13.00 20 LEAD IN CONSTRUCTION.(When Applicable)

h. Asbestos Hazard Abatement Plan. The safety and health aspects of asbestos work, prepared in accordance with Section 02 82 14.00 10 ASBESTOS ABATEMENT 02 82 16.00 20 ENGINEERING CONTROL OF ASBESTOS CONTAINING MATERIALS(When Applicable).

i. Site Safety and Health Plan. The safety and health aspects prepared in accordance with Section 01 35 29.13 HEALTH, SAFETY, AND EMERGENCY RESPONSE PROCEDURES FOR CONTAMINATED SITES.

j. PCB Plan. The safety and health aspects of Polychlorinated Biphenyls work, prepared in accordance with Sections 02 84 33 REMOVAL AND DISPOSAL OF POLYCHLORINATED BIPHENYLS and 02 61 23 REMOVAL AND DISPOSAL OF PCB CONTAMINATED SOILS.(When Applicable)

k. Site Demolition Plan. The safety and health aspects prepared in accordance with Section 02 41 00 DEMOLITION and referenced sources.[Include engineering survey as applicable.

l. Excavation Plan. The safety and health aspects prepared in accordance with Section 31 00 00 EARTHWORK.

1.7 ACTIVITY HAZARD ANALYSIS (AHA)

The Activity Hazard Analysis (AHA) format shall be in accordance with USACE EM 385-1-1, Section 1. Submit the AHA for review at least 15 calendar days prior to the start of each phase. Format subsequent AHAs as amendments to the APP. The analysis should be used during daily inspections to ensure the implementation and effectiveness of the activity's safety and health controls.

The AHA list will be reviewed periodically (at least monthly) at the Contractor supervisory safety meeting and updated as necessary when procedures, scheduling, or hazards change.

Develop the activity hazard analyses using the project schedule as the basis for the activities performed. Any activities listed on the project schedule will require an AHA. The AHAs will be developed by the contractor, supplier or subcontractor and provided to the prime contractor for submittal to the Contracting Officer.

1.8 DISPLAY OF SAFETY INFORMATION

Within 1 calendar days after commencement of work, erect a safety bulletin board at the job site. Where size, duration, or logistics of project do not facilitate a bulletin board, an alternative method, acceptable to the Contracting Officer, that is accessible and includes all mandatory information for employee and visitor review, shall be deemed as meeting the requirement for a bulletin board. Include and maintain information on safety bulletin board as required by EM 385-1-1, section 01.A.06. Additional items required to be posted include:

a. Confined space entry permit.

b. Hot work permit.

1.9 SITE SAFETY REFERENCE MATERIALS

Maintain safety-related references applicable to the project, including those listed in the article "References." Maintain applicable equipment manufacturer's manuals.

1.10 EMERGENCY MEDICAL TREATMENT

Contractors will arrange for their own emergency medical treatment. Government has no responsibility to provide emergency medical treatment.

1.11 REPORTS

1.11.1 Accident Reports

a. Conduct an accident investigation for recordable injuries and illnesses, as defined in 1.3.h and property damage accidents resulting in at least $2,000 in damages, to establish the root cause(s) of the USACE Accident Report Form 3394 and provide the report to the Contracting Officer within 5 calendar day(s) of the accident. The Contracting Officer will provide copies of any required or special forms.

1.11.2 Accident Notification

Notify the Contracting Officer as soon as practical, but not later than four hours, after any accident meeting the definition of Recordable Injuries or Illnesses or High Visibility Accidents, property damage equal to or greater than $2,000, . Within notification include contractor name; contract title; type of contract; name of activity, installation or location where accident occurred; date and time of accident; names of personnel injured; extent of property damage, if any; extent of injury, if known, and brief description of accident (to include type of construction equipment used, PPE used, etc.). Preserve the conditions and evidence on the accident site until the Government investigation team arrives on-site and Government investigation is conducted.

1.11.3 Crane Reports

Submit crane inspection reports required in accordance with USACE EM 385-1-1, Appendix I and as specified herein with Daily Reports of Inspections.

1.11.4 Certificate of Compliance

Provide a Certificate of Compliance for each crane entering an activity under this contract (see Contracting Officer for a blank certificate). State within the certificate that the crane and rigging gear meet applicable OSHA regulations (with the Contractor citing which OSHA regulations are applicable, e.g., cranes used in construction, demolition, or maintenance comply with 29 CFR 1926 and USACE EM 385-1-1 Section 16 and Appendix I. Certify on the Certificate of Compliance that the crane operator(s) is qualified and trained in the operation of the crane to be used. For cranes at DOD activities in foreign countries, certify that the crane and rigging gear conform to the appropriate host country safety standards. Also certify that all of its crane operators working on the DOD activity have been trained in the proper use of all safety devices (e.g., anti-two block devices). Post certifications on the crane.

1.12 HOT WORK

Submit and obtain a written permit prior to performing "Hot Work" (welding, cutting, etc.) or operating other flame-producing/spark producing devices, from the [Fire Division. A permit is required from the Explosives Safety Office for work in and around where explosives are processed, stored, or handled. CONTRACTORS ARE REQUIRED TO MEET ALL CRITERIA BEFORE A PERMIT IS ISSUED. The Contractor will provide at least two (2) twenty (20) pound 4A:20 BC rated extinguishers for normal "Hot Work". All extinguishers shall be current inspection tagged, approved safety pin and tamper resistant seal. It is also mandatory to have a designated FIRE WATCH for any "Hot Work" done at this activity. The Fire Watch shall be trained in accordance with NFPA 51B and remain on-site for a minimum of 30 minutes after completion of the task or as specified on the hot work permit.

When starting work in the facility, require personnel to familiarize themselves with the location of the nearest fire alarm boxes and have in their possessiojn the emergency Fire Division phone number. ANY FIRE, NO MATTER HOW SMALL, SHALL BE REPORTED TO THE RESPONSIBLE FIRE DIVISION IMMEDIATELY.

Obtain services from a NFPA Certified Marine Chemist for "HOT WORK" within or around flammable materials (such as fuel systems, welding/cutting on fuel pipes) or confined spaces (such as sewer wet wells, manholes, vaults, etc.) that have the potential for flammable or explosive atmospheres.

1.13 RADIATION SAFETY REQUIREMENTS (When Applicable)

License Certificates for radiation materials and equipment shall be submitted to the Contracting Officer and Radiation Safety Office (RSO) for all specialized and licensed material and equipment that could cause fatal harm to construction personnel or to the construction project.

Workers shall be protected from radiation exposure in accordance with 10 CFR 20. Standards for Protection Against Radiation

Loss of radioactive material shall be reported immediately to the Contracting Officer.

Actual exposure of the radiographic film or unshielding the source shall not be initiated until after 5 p.m. on weekdays.

In instances where radiography is scheduled near or adjacent to buildings or areas having limited access or one-way doors, no assumptions shall be made as to building occupancy. Where necessary, the Contracting Officer will direct the Contractor to conduct an actual building entry, search, and alert. Where removal of personnel from such a building cannot be accomplished and it is otherwise safe to proceed with the radiography, a fully instructed employee shall be positioned inside such building or area to prevent exiting while external radiographic operations are in process. Transportation of Regulated Amounts of Radioactive Material will comply with 49 CFR, Subchapter C, Hazardous Material Regulations. Local Fire authorities and the site Radiation Safety officer (RSO) shall be notified of any Radioactive Material use.

Transmitter Requirements: The base policy concerning the use of transmitters such as radios, cell phones, etc., must be adhered to by all

contractor personnel. They must also obey Emissions control (EMCON) restrictions.

1.14 FACILITY OCCUPANCY CLOSURE

Streets, walks, and other facilities occupied and used by the Government shall not be closed or obstructed without written permission from the Contracting Officer.

1.15 SEVERE STORM PLAN

In the event of a severe storm warning, the Contractor must:

a. Secure outside equipment and materials and place materials that could be damaged in protected areas.

b. Check surrounding area, including roof, for loose material, equipment, debris, and other objects that could be blown away or against existing facilities.

PART 2 PRODUCTS

Not used.

2.1 CONFINED SPACE SIGNAGE

Provide permanent signs integral to or securely attached to access covers for new permit-required confined spaces. Signs wording: "DANGER--PERMIT-REQUIRED CONFINED SPACE - DO NOT ENTER -" in bold letters a minimum of one inch in height and constructed to be clearly legible with all paint removed. The signal word "DANGER" shall be red and readable from 5 feet.

2.2 FALL PROTECTION ANCHORAGE

Leave in place fall protection anchorage, conforming to ASSE/SAFE Z359.1, installed under the supervision of a qualified person in fall protection, for continued customer use and so identified by signage stating the capacity of the anchorage (strength and number of persons who may be tied-off to it at any one time).

PART 3 EXECUTION

3.1 CONSTRUCTION AND/OR OTHER WORK

Comply with USACE EM 385-1-1, NFPA 241, the APP, the AHA, Federal and/or State OSHA regulations, and other related submittals and activity fire and safety regulations. The most stringent standard prevails.

3.1.1 Hazardous Material Use

Each hazardous material must receive approval from the Contracting Office or their designated representative prior to being brought onto the job site or prior to any other use in connection with this contract. Allow a minimum of 10 working days for processing of the request for use of a hazardous material.

3.1.2 Hazardous Material Exclusions

Notwithstanding any other hazardous material used in this contract, radioactive materials or instruments capable of producing ionizing/non-ionizing radiation (with the exception of radioactive material and devices used in accordance with USACE EM 385-1-1 such as nuclear density meters for compaction testing and laboratory equipment with radioactive sources) as well as materials which contain asbestos, mercury or polychlorinated biphenyls, di-isocynates, lead-based paint are prohibited. The Contracting Officer, upon written request by the Contractor, may consider exceptions to the use of any of the above excluded materials. The Radiation Safety Officer (RSO) must be notified prior to excepted items of radioactive material and devices being brought on base.

3.1.3 Unforeseen Hazardous Material

The design should have identified materials such as PCB, lead paint, and friable and non-friable asbestos and other OSHA regulated chemicals (i.e. 29 CFR Part 1910.1000). If additional material, not indicated, that may be hazardous to human health upon disturbance during construction operations is encountered, stop that portion of work and notify the Contracting Officer immediately. Within 14 calendar days the Government will determine if the material is hazardous. If material is not hazardous or poses no danger, the Government will direct the Contractor to proceed without change. If material is hazardous and handling of the material is necessary to accomplish the work, the Government will issue a modification pursuant to "FAR 52.243-4, Changes" and "FAR 52.236-2, Differing Site Conditions."

3.2 PRE-OUTAGE COORDINATION MEETING

Contractors are required to apply for utility outages at least 15 days in advance. As a minimum, the request should include the location of the outage, utilities being affected, duration of outage and any necessary sketches. Special requirements for electrical outage requests are contained elsewhere in this specification section. Once approved, and prior to beginning work on the utility system requiring shut down, attend a pre-outage coordination meeting with the Contracting Officer to review the scope of work and the lock-out/tag-out procedures for worker protection. No work will be performed on energized electrical circuits unless proof is provided that no other means exist.

3.3 CONTROL OF HAZARDOUS ENERGY (LOCKOUT/TAGOUT)

Contractor shall ensure that each employee is familiar with and complies with these procedures and USACE EM 385-1-1, Section 12, Control of Hazardous Energy.

Contracting Officer will, at the Contractor's request, apply lockout/tagout tags and take other actions that, because of experience and knowledge, are known to be necessary to make the particular equipment safe to work on for government owned and operated systems.

No person, regardless of position or authority, shall operate any switch, valve, or equipment that has an official lockout/tagout tag attached to it, nor shall such tag be removed except as provided in this section. No person shall work on any energized equipment including, but not limited to activities such as erecting, installing, constructing, repairing, adjusting, inspecting, un-jamming, setting up, trouble shooting, testing, cleaning, dismantling, servicing and maintaining machines equipment of

processes until an evaluation has been conducted identifying the energy source and the procedures which will be taken to ensure the safety of personnel.

When work is to be performed on electrical circuits, only qualified personnel shall perform work on electrical circuits.

A supervisor who is required to enter an area protected by a lockout/tagout tag will be considered a member of the protected group provided he notifies the holder of the tag stub each time he enters and departs from the protected area.

Identification markings on building light and power distribution circuits shall not be relied on for established safe work conditions.

Before clearance will be given on any equipment other than electrical (generally referred to as mechanical apparatus), the apparatus, valves, or systems shall be secured in a passive condition with the appropriate vents, pins, and locks.

Pressurized or vacuum systems shall be vented to relieve differential pressure completely.

Vent valves shall be tagged open during the course of the work.

Where dangerous gas or fluid systems are involved, or in areas where the environment may be oxygen deficient, system or areas shall be purged, ventilated, or otherwise made safe prior to entry.

3.3.1 Tag Placement

Lockout/tagout tags shall be completed in accordance with the regulations printed on the back thereof and attached to any device which, if operated, could cause an unsafe condition to exist.

If more than one group is to work on any circuit or equipment, the employee in charge of each group shall have a separate set of lockout/tagout tags completed and properly attached.

When it is required that certain equipment be tagged, the Government will review the characteristics of the various systems involved that affect the safety of the operations and the work to be done; take the necessary actions, including voltage and pressure checks, grounding, and venting, to make the system and equipment safe to work on; and apply such lockout/tagout tags to those switches, valves, vents, or other mechanical devices needed to preserve the safety provided. This operation is referred to as "Providing Safety Clearance."

3.3.2 Tag Removal

When any individual or group has completed its part of the work and is clear of the circuits or equipment, the supervisor, project leader, or individual for whom the equipment was tagged shall turn in his signed lockout/tagout tag stub to the Contracting Officer. That group's or individual's lockout/tagout tags on equipment may then be removed on authorization by the Contracting Officer.

3.4 FALL HAZARD PROTECTION AND PREVENTION PROGRAM

Establish a fall protection and prevention program, for the protection of all employees exposed to fall hazards. Within the program include company policy, identify responsibilities, education and training requirements, fall hazard identification, prevention and control measures, inspection, storage, care and maintenance of fall protection equipment and rescue and evacuation procedures.

3.4.1 Training

Institute a fall protection training program. As part of the Fall Hazard Protection and Prevention Program, provide training for each employee who might be exposed to fall hazards. Provide training by a competent person for fall protection in accordance with USACE EM 385-1-1, Section 21.B.

3.4.2 Fall Protection Equipment and Systems

Enforce use of the fall protection equipment and systems designated for each specific work activity in the Fall Protection and Prevention Plan and/or AHA at all times when an employee is exposed to a fall hazard. Protect employees from fall hazards as specified in EM 385-1-1, Section 21. In addition to the required fall protection systems, safety skiff, personal floatation devices, life rings etc., are required when working above or next to water in accordance with USACE EM 385-1-1, Paragraphs 21.N through 21.N.04. Personal fall arrest systems are required when working from an articulating or extendible boom, swing stages, or suspended platform. In addition, personal fall arrest systems are required when operating other equipment such as scissor lifts if the work platform is capable of being positioned outside the wheelbase. The need for tying-off in such equipment is to prevent ejection of the employee from the equipment during raising, lowering, or travel. Fall protection must comply with 29 CFR 1926.500, Subpart M, USACE EM 385-1-1 and ASSE/SAFE A10.32.

3.4.2.1 Personal Fall Arrest Equipment

Personal fall arrest equipment, systems, subsystems, and components shall meet ASSE/SAFE Z359.1. Only a full-body harness with a shock-absorbing lanyard or self-retracting lanyard is an acceptable personal fall arrest body support device. Body belts may only be used as a positioning device system (for uses such as steel reinforcing assembly and in addition to an approved fall arrest system). Harnesses shall have a fall arrest attachment affixed to the body support (usually a Dorsal D-ring) and specifically designated for attachment to the rest of the system. Only locking snap hooks and carabiners shall be used. Webbing, straps, and ropes shall be made of synthetic fiber. The maximum free fall distance when using fall arrest equipment shall not exceed 6 feet. The total fall distance and any swinging of the worker (pendulum-like motion) that can occur during a fall shall always be taken into consideration when attaching a person to a fall arrest system.

3.4.3 Fall Protection for Roofing Work

Implement fall protection controls based on the type of roof being constructed and work being performed. Evaluate the roof area to be accessed for its structural integrity including weight-bearing capabilities for the projected loading.

a. Low Sloped Roofs:

(1) For work within 6 feet of an edge, on low-slope roofs, Protect personnel from falling by use of personal fall arrest systems, guardrails, or safety nets. A safety monitoring system is not adequate fall protection and is not authorized.

(2) For work greater than 6 feet from an edge, erect and install warning lines in accordance with 29 CFR 1926.500 and USACE EM 385-1-1.

b. Steep-Sloped Roofs: Work on steep-sloped roofs requires a personal fall arrest system, guardrails with toe-boards, or safety nets. This requirement also includes residential or housing type construction.

3.4.4 Existing Anchorage

Certified (or re-certified) by a qualified person for fall protection existing anchorages, to be used for attachment of personal fall arrest equipment in accordance with ASSE/SAFE Z359.1. Exiting horizontal lifeline anchorages must be certified (or re-certified) by a registered professional engineer with experience in designing horizontal lifeline systems.

3.4.5 Horizontal Lifelines

Design, install, certify and use under the supervision of a qualified person horizontal lifelines for fall protection as part of a complete fall arrest system which maintains a safety factor of 2 (29 CFR 1926.500).

3.4.6 Guardrails and Safety Nets

Design, install and use guardrails and safety nets in accordance with EM 385-1-1 and 29 CFR 1926 Subpart M.

3.4.7 Rescue and Evacuation Procedures

When personal fall arrest systems are used, the contractor must ensure that the mishap victim can self-rescue or can be rescued promptly should a fall occur. Prepare a Rescue and Evacuation Plan and include a detailed discussion of the following: methods of rescue; methods of self-rescue; equipment used; training requirement; specialized training for the rescuers; procedures for requesting rescue and medical assistance; and transportation routes to a medical facility. Include the Rescue and Evacuation Plan within the Activity Hazard Analysis (AHA) for the phase of work, in the Fall Protection and Prevention (FP&P) Plan, and the Accident Prevention Plan (APP).

[3.5 PPE

All personnel who enter the Controlled Industrial Area (CIA) shall wear mandatory personal protective equipment (PPE) at all times and comply with PPE postings of shops both inside and outside the CIA. PPE is governed in all other areas by the nature of the work the employee is performing. They will also use personal hearing protection at all times in designated noise hazardous areas or when performing noise hazardous tasks. Mandatory PPE includes:

a. Hard Hat

b. Safety Glasses

c. Appropriate Safety Shoes

d. Reflective Vests

]3.6 SCAFFOLDING

Provide employees with a safe means of access to the work area on the scaffold. Climbing of any scaffold braces or supports not specifically designed for access is prohibited. Access scaffold platforms greater than 20 feet maximum in height by use of a scaffold stair system. Do not use vertical ladders commonly provided by scaffold system manufacturers for accessing scaffold platforms greater than 20 feet maximum in height. The use of an adequate gate is required. Ensure that employees are qualified to perform scaffold erection and dismantling. Do not use scaffold without the capability of supporting at least four times the maximum intended load or without appropriate fall protection as delineated in the accepted fall protection and prevention plan. Stationary scaffolds must be attached to structural building components to safeguard against tipping forward or backward. Give special care to ensure scaffold systems are not overloaded. Side brackets used to extend scaffold platforms on self-supported scaffold systems for the storage of material is prohibited. The first tie-in shall be at the height equal to 4 times the width of the smallest dimension of the scaffold base. Place work platforms on mud sills. Scaffold or work platform erectors shall have fall protection during the erection and dismantling of scaffolding or work platforms that are more than six feet. Delineate fall protection requirements when working above six feet or above dangerous operations in the Fall Protection and Prevention (FP&P) Plan and Activity Hazard Analysis (AHA) for the phase of work.

3.7 EQUIPMENT

3.7.1 Material Handling Equipment

a. Material handling equipment such as forklifts shall not be modified with work platform attachments for supporting employees unless specifically delineated in the manufacturer's printed operating instructions.

b. The use of hooks on equipment for lifting of material must be in accordance with manufacturer's printed instructions.

c. Operators of forklifts or power industrial trucks shall be licensed in accordance with OSHA.

3.7.2 Weight Handling Equipment

a. Equip cranes and derricks as specified in EM 385-1-1, section 16.

b. Notify the Contracting Officer 15 days in advance of any cranes entering the activity so that necessary quality assurance spot checks can be coordinated. Prior to cranes entering federal activities, a Crane Access Permit must be obtained from the Contracting Officer. A copy of the permitting process will be provided at the Preconstruction Conference. Contractor's operator shall remain with the crane during the spot check.

c. Comply with the crane manufacturer's specifications and limitations for

erection and operation of cranes and hoists used in support of the work. Perform erection under the supervision of a designated person (as defined in ASME B30.5). Perform all testing in accordance with the manufacturer's recommended procedures.

d. Comply with ASME B30.5 for mobile and locomotive cranes, ASME B30.22 for articulating boom cranes, ASME B30.3 for construction tower cranes, and ASME B30.8 for floating cranes and floating derricks.

e. Under no circumstance shall a Contractor make a lift at or above 90 percent of the cranes rated capacity in any configuration.

f. When operating in the vicinity of overhead transmission lines, operators and riggers shall be alert to this special hazard and follow the requirements of USACE EM 385-1-1 Section 11 and ASME B30.5 or ASME B30.22 as applicable.

g. Do not crane suspended personnel work platforms (baskets) unless the Contractor proves that using any other access to the work location would provide a greater hazard to the workers or is impossible. Do not lift personnel with a line hoist or friction crane.

h. Inspect, maintain, and recharge portable fire extinguishers as specified in NFPA 10, Standard for Portable Fire Extinguishers.

i. All employees must keep clear of loads about to be lifted and of suspended loads.

j. Use cribbing when performing lifts on outriggers.

k. The crane hook/block must be positioned directly over the load. Side loading of the crane is prohibited.

l. A physical barricade must be positioned to prevent personnel from entering the counterweight swing (tail swing) area of the crane.

m. Certification records which include the date of inspection, signature of the person performing the inspection, and the serial number or other identifier of the crane that was inspected shall always be available for review by Contracting Officer personnel.

n. Written reports listing the load test procedures used along with any repairs or alterations performed on the crane shall be available for review by Contracting Officer personnel.

o. Certify that all crane operators have been trained in proper use of all safety devices (e.g. anti-two block devices).

p. Take steps to ensure that wind speed does not contribute to loss of control of the load during lifting operations. Prior to conducting lifting operations set a maximum wind speed at which a crane can be safely operated based on the equipment being used, the load being lifted, experience of operators and riggers, and hazards on the work site. This maximum wind speed determination shall be included as part of the activity hazard analysis plan for that operation.

3.7.3 Equipment and Mechanized Equipment

a. Proof of qualifications for operator shall be kept on the project site

for review.

b. Manufacture specifications or owner's manual for the equipment shall be on-site and reviewed for additional safety precautions or requirements that are sometimes not identified by OSHA or USACE EM 385-1-1. Incorporate such additional safety precautions or requirements into the AHAs.

3.7.4 USE OF EXPLOSIVES

Explosives shall not be used or brought to the project site under any circumstances under this contract.

3.8 EXCAVATIONS

Perform soil classification by a competent person in accordance with 29 CFR 1926.

3.8.1 Utility Locations

Prior to digging, the appropriate digging permit must be obtained. All underground utilities in the work area must be positively identified by a private utility locating service in addition to any station locating service and coordinated with the station utility department. Any markings made during the utility investigation must be maintained throughout the contract.

3.8.2 Utility Location Verification

The Contractor must physically verify underground utility locations by hand digging using wood or fiberglass handled tools when any adjacent construction work is expected to come within three feet of the underground system. Digging within 2 feet of a known utility must not be performed by means of mechanical equipment; hand digging shall be used. If construction is parallel to an existing utility expose the utility by hand digging every 100 feet if parallel within 5 feet of the excavation.

3.8.3 Shoring Systems

Trench and shoring systems must be identified in the accepted safety plan and AHA. Manufacture tabulated data and specifications or registered engineer tabulated data for shoring or benching systems shall be readily available on-site for review. Job-made shoring or shielding must have the registered professional engineer stamp, specifications, and tabulated data. Extreme care must be used when excavating near direct burial electric underground cables.

3.8.4 Trenching Machinery

Operate trenching machines with digging chain drives only when the spotters/laborers are in plain view of the operator. Provide operator and spotters/laborers training on the hazards of the digging chain drives with emphasis on the distance that needs to be maintained when the digging chain is operating. Keep documentation of the training on file at the project site.

3.9 UTILITIES WITHIN CONCRETE SLABS

Utilities located within concrete slabs or pier structures, bridges, and

the like, are extremely difficult to identify due to the reinforcing steel used in the construction of these structures. Whenever contract work involves concrete chipping, saw cutting, or core drilling, the existing utility location must be coordinated with station utility departments in addition to a private locating service. Outages to isolate utility systems must be used in circumstances where utilities are unable to be positively identified. The use of historical drawings does not alleviate the contractor from meeting this requirement.

3.10 ELECTRICAL

3.10.1 Conduct of Electrical Work

Underground electrical spaces must be certified safe for entry before entering to conduct work. Cables that will be cut must be positively identified and de-energized prior to performing each cut. Positive cable identification must be made prior to submitting any outage request for electrical systems. Arrangements are to be coordinated with the Contracting Officer and Station Utilities for identification. The Contracting Officer will not accept an outage request until the Contractor satisfactorily documents that the circuits have been clearly identified. Perform all high voltage cable cutting remotely using hydraulic cutting tool. When racking in or live switching of circuit breakers, no additional person other than the switch operator will be allowed in the space during the actual operation. Plan so that work near energized parts is minimized to the fullest extent possible. Use of electrical outages clear of any energized electrical sources is the preferred method. When working in energized substations, only qualified electrical workers will be permitted to enter. When work requires Contractor to work near energized circuits as defined by the NFPA 70, high voltage personnel must use personal protective equipment that includes, as a minimum, electrical hard hat, safety shoes, insulating gloves with leather protective sleeves, fire retarding shirts, coveralls, face shields, and safety glasses. In addition, provide electrical arc flash protection for personnel as required by NFPA 70E. Insulating blankets, hearing protection, and switching suits may also be required, depending on the specific job and as delineated in the Contractor's AHA.

3.10.2 Portable Extension Cords

Size portable extension cords in accordance with manufacturer ratings for the tool to be powered and protected from damage. Immediately removed from service all damaged extension cords. Portable extension cords shall meet the requirements of NFPA 70E and OSHA electrical standards.

3.11 WORK IN CONFINED SPACES

Comply with the requirements in Section 34 of USACE EM 385-1-1, OSHA 29 CFR 1910.146 and OSHA 29 CFR 1926.21(b)(6). Any potential for a hazard in the confined space requires a permit system to be used.

a. Entry Procedures. Prohibit entry into a confined space by personnel for any purpose, including hot work, until the qualified person has conducted appropriate tests to ensure the confined or enclosed space is safe for the work intended and that all potential hazards are controlled or eliminated and documented. (See Section 34 of USACE EM 385-1-1 for entry procedures.) All hazards pertaining to the space shall be reviewed with each employee during review of the AHA.

b. Forced air ventilation is required for all confined space entry operations and the minimum air exchange requirements must be maintained to ensure exposure to any hazardous atmosphere is kept below its' action level.

c. Sewer wet wells require continuous atmosphere monitoring with audible alarm for toxic gas detection.

-- End of Section --

SECTION TABLE OF CONTENTS

DIVISION 01 - GENERAL REQUIREMENTS

SECTION 01 42 00

SOURCES FOR REFERENCE PUBLICATIONS

PART 1 GENERAL

1.1 REFERENCES
1.2 ORDERING INFORMATION

PART 2 PRODUCTS

PART 3 EXECUTION

-- End of Section Table of Contents --

SECTION 01 42 00

SOURCES FOR REFERENCE PUBLICATIONS

PART 1 GENERAL

1.1 REFERENCES

Various publications are referenced in other sections of the specifications to establish requirements for the work. These references are identified in each section by document number, date and title. The document number used in the citation is the number assigned by the standards producing organization, (e.g. ASTM B 564 Nickel Alloy Forgings). However, when the standards producing organization has not assigned a number to a document, an identifying number has been assigned for reference purposes.

1.2 ORDERING INFORMATION

The addresses of the standards publishing organizations whose documents are referenced in other sections of these specifications are listed below, and if the source of the publications is different from the address of the sponsoring organization, that information is also provided. Documents listed in the specifications with numbers which were not assigned by the standards producing organization should be ordered from the source by title rather than by number.

AMERICAN SOCIETY OF SAFETY ENGINEERS (ASSE/SAFE)
1800 East Oakton Street
Des Plaines, IL 60018-2187
Ph: 847-699-2929
Fax: 847-768-3434
E-mail: customerservice@asse.org
Internet: http://www.asse.org

ASME INTERNATIONAL (ASME)
Three Park Avenue, M/S 10E
New York, NY 10016-5990
Ph: 800-854-7179 or 800-843-2763
Fax: 212-591-7674
E-mail: infocentral@asme.org
Internet: http://www.asme.org

ASTM INTERNATIONAL (ASTM)
100 Barr Harbor Drive, P.O. Box C700
West Conshohocken, PA 19428-2959
Ph: 610-832-9585
Fax: 610-832-9555
E-mail: service@astm.org
Internet: http://www.astm.org

NATIONAL FIRE PROTECTION ASSOCIATION (NFPA)
1 Batterymarch Park
Quincy, MA 02169-7471
Ph: 617-770-3000 or 800-344-3555
Fax: 617-770-0700

E-mail: webmaster@nfpa.org
Internet: http://www.nfpa.org

U.S. ARMY CORPS OF ENGINEERS (USACE)
Order CRD-C DOCUMENTS from:
Headquarters Points of contact
441 G Street NW
Washington, DC 20314-1000
Ph: 202-761-0011
E-mail: hq-publicaffairs@.usace.army.mil
Internet: http://www.wes.army.mil/SL/MTC/handbook.htm
Order Other Documents from:
USACE Publications Depot
Attn: CEHEC-IM-PD
2803 52nd Avenue
Hyattsville, MD 20781-1102
Ph: 301-394-0081
Fax: 301-394-0084
E-mail: pubs-army@usace.army.mil
Internet: http://www.usace.army.mil/publications
or http://www.hnd.usace.army.mil/techinfo/engpubs.htm

U.S. NATIONAL ARCHIVES AND RECORDS ADMINISTRATION (NARA)
8601 Adelphi Road
College Park, MD 20740-6001
Ph: 866-272-6272
Fax: 301-837-0483
E-mail: contactcenter@gpo.gov
Internet: http://www.archives.gov
Order documents from:
Superintendent of Documents
U.S.Government Printing Office (GPO)
732 North Capitol Street, NW
Washington, DC 20401
Ph: 202-512-1800
Fax: 202-512-2104
E-mail: contactcenter@gpo.gov
Internet: http://www.gpoaccess.gov

PART 2 PRODUCTS

Not Used

PART 3 EXECUTION

Not used

-- End of Section --

SECTION TABLE OF CONTENTS

DIVISION 01 - GENERAL REQUIREMENTS

SECTION 01 45 02.00 10

QUALITY CONTROL SYSTEM (QCS)

PART 1 GENERAL

1.1 Contract Administration
1.1.1 Correspondence and Electronic Communications
1.1.2 Other Factors
1.2 QCS SOFTWARE
1.3 RELATED INFORMATION
1.3.1 QCS User Guide
1.3.2 Contractor Quality Control(CQC) Training
1.4 CONTRACT DATABASE
1.5 DATABASE MAINTENANCE
1.5.1 Administration
1.5.1.1 Contractor Information
1.5.1.2 Subcontractor Information
1.5.1.3 Correspondence
1.5.1.4 Equipment
1.5.1.5 Management Reporting
1.5.1.6 Request For Information (RFI)
1.5.2 Finances
1.5.2.1 Pay Activity Data
1.5.2.2 Payment Requests
1.5.3 Quality Control (QC)
1.5.3.1 Daily Contractor Quality Control (CQC) Reports.
1.5.3.2 Deficiency Tracking.
1.5.3.3 QC Requirements
1.5.3.4 Three-Phase Control Meetings
1.5.3.5 Labor and Equipment Hours
1.5.3.6 Accident/Safety Reporting
1.5.3.7 Features of Work
1.5.3.8 Hazard Analysis
1.5.4 Submittal Management
1.5.5 Schedule
1.5.6 Import/Export of Data
1.6 IMPLEMENTATION
1.7 DATA SUBMISSION VIA CD-ROM
1.7.1 File Medium
1.7.2 CD-ROM Labels
1.7.3 File Names
1.8 MONTHLY COORDINATION MEETING
1.9 NOTIFICATION OF NONCOMPLIANCE

PART 2 PRODUCTS

PART 3 EXECUTION

-- End of Section Table of Contents --

SECTION 01 45 02.00 10

QUALITY CONTROL SYSTEM (QCS)

PART 1 GENERAL

1.1 Contract Administration

The Government will use the Resident Management System for Windows (RMS) to assist in its monitoring and administration of this contract. The Contractor shall use the Government-furnished Construction Contractor Module of RMS, referred to as QCS, to record, maintain, and submit various information throughout the contract period. The Contractor module, user manuals, updates, and training information can be downloaded from the RMS web site. This joint Government-Contractor use of RMS and QCS will facilitate electronic exchange of information and overall management of the contract. QCS provides the means for the Contractor to input, track, and electronically share information with the Government in the following areas:

Administration
Finances
Quality Control
Submittal Monitoring
Scheduling
Import/Export of Data

1.1.1 Correspondence and Electronic Communications

For ease and speed of communications, both Government and Contractor will, to the maximum extent feasible, exchange correspondence and other documents in electronic format. Correspondence, pay requests and other documents comprising the official contract record shall also be provided in paper format, with signatures and dates where necessary. Paper documents will govern, in the event of discrepancy with the electronic version.

1.1.2 Other Factors

Particular attention is directed to Contract Clause 52.236-15 "Schedules for Construction Contracts", Contract Clause 52.232-5 "Payments", Section 01 32 17.00 20 NETWORK ANALYSIS SCHEDULES (NAS), Section 01 33 00 SUBMITTAL PROCEDURES, and Section 01 45 04.00 10, CONTRACTOR QUALITY CONTROL, which have a direct relationship to the reporting to be accomplished through QCS. Also, there is no separate payment for establishing and maintaining the QCS database; all costs associated therewith shall be included in the contract pricing for the work.

1.2 QCS SOFTWARE

QCS is a Windows-based program that can be run on a stand-alone personal computer or on a network. The Government will make available the QCS software to the Contractor after award of the construction contract. Prior to the Pre-Construction Conference, the Contractor shall be responsible to download, install and use the latest version of the QCS software from the Government's RMS Internet Website located at http://www.rmssupport.com/qcs/default.aspx. Upon specific justification

and request by the Contractor, the Government can provide QCS on CD-ROM. Any program updates of QCS will be made available to the Contractor via the Government RMS Website as they become available.

1.3 RELATED INFORMATION

1.3.1 QCS User Guide

After contract award, the Contractor shall download instructions for the installation and use of QCS from the Government RMS Internet Website. In case of justifiable difficulties, the Government will provide the Contractor with a CD-ROM containing these instructions.

1.3.2 Contractor Quality Control(CQC) Training

The use of QCS will be discussed with the Contractor's QC System Manager during the mandatory CQC Training class.

1.4 CONTRACT DATABASE

Prior to the pre-construction conference, the Government will provide the Contractor with basic contract award data to use for QCS. The Government will provide data updates to the Contractor as needed, generally by using the Government's SFTP repository built into QCS import/export function. These updates will generally consist of submittal reviews, correspondence status, QA comments, and other administrative and QA data.

1.5 DATABASE MAINTENANCE

The Contractor shall establish, maintain, and update data for the contract in the QCS database throughout the duration of the contract. The Contractor shall establish and maintain the QCS database at the Contractor's site office. Submit data updates to the Government (e.g., daily reports, submittals, RFI's, schedule updates, payment requests, etc.) using the Government's SFTP repository built into QCS export function. If permitted by the Contracting Officer, e-mail or CD-ROM may be used instead of E-mail (see Paragraph DATA SUBMISSION VIA CD-ROM). The QCS database typically shall include current data on the following items:

1.5.1 Administration

1.5.1.1 Contractor Information

The database shall contain the Contractor's name, address, telephone numbers, management staff, and other required items. Within 14 calendar days of receipt of QCS software from the Government, deliver Contractor administrative data in electronic format.

1.5.1.2 Subcontractor Information

The database shall contain the name, trade, address, phone numbers, and other required information for all subContractors. A subcontractor must be listed separately for each trade to be performed. Assign each subcontractor/trade a unique Responsibility Code, provided in QCS. Within 14 calendar days of receipt of QCS software from the Government, deliver subcontractor administrative data in electronic format.

1.5.1.3 Correspondence

Identify all Contractor correspondence to the Government with a serial number. Prefix correspondence initiated by the Contractor's site office with "S". Prefix letters initiated by the Contractor's home (main) office with "H". Letters shall be numbered starting from 0001. (e.g., H-0001 or S-0001). The Government's letters to the Contractor will be prefixed with "C".

1.5.1.4 Equipment

The Contractor's QCS database shall contain a current list of equipment planned for use or being used on the jobsite, including the most recent and planned equipment inspection dates.

1.5.1.5 Management Reporting

QCS includes a number of reports that Contractor management can use to track the status of the project. The value of these reports is reflective of the quality of the data input, and is maintained in the various sections of QCS. Among these reports are: Progress Payment Request worksheet, QA/QC comments, Submittal Register Status, Three-Phase Inspection checklists.

1.5.1.6 Request For Information (RFI)

Exchange all Requests For Information (RFI) using the Built-in RFI generator and tracker in QCS.

1.5.2 Finances

1.5.2.1 Pay Activity Data

The QCS database shall include a list of pay activities that the Contractor shall develop in conjunction with the construction schedule. The sum of all pay activities shall be equal to the total contract amount, including modifications. Group pay activities Contract Line Item Number (CLIN); the sum of the activities shall equal the amount of each CLIN. The total of all CLINs equals the Contract Amount.

1.5.2.2 Payment Requests

Prepare all progress payment requests using QCS. Complete the payment request worksheet, prompt payment certification, and payment invoice in QCS. Update the work completed under the contract, measured as percent or as specific quantities, at least monthly. After the update, generate a payment request report using QCS. Submit the payment request, prompt payment certification, and payment invoice with supporting data using the Government's SFTP repository built into QCS export function. If permitted by the Contracting Officer, e-mail or a CD-ROM may be used. A signed paper copy of the approved payment request is also required, which will govern in the event of discrepancy with the electronic version.

1.5.3 Quality Control (QC)

QCS provides a means to track implementation of the 3-phase QC Control System, prepare daily reports, identify and track deficiencies, document progress of work, and support other Contractor QC requirements. Maintain this data on a daily basis. Entered data will automatically output to the QCS generated daily report. Provide the Government a Contractor Quality

Control (CQC) Plan within the time required in Section 01 45 04.00 10, CONTRACTOR QUALITY CONTROL. Within seven calendar days of Government acceptance, submit a QCS update reflecting the information contained in the accepted CQC Plan: schedule, pay activities, features of work, submittal register, QC requirements, and equipment list.

1.5.3.1 Daily Contractor Quality Control (CQC) Reports.

QCS includes the means to produce the Daily CQC Report. The Contractor may use other formats to record basic QC data. However, the Daily CQC Report generated by QCS shall be the Contractor's official report. Summarize data from any supplemental reports by the Contractor and consolidate onto the QCS-generated Daily CQC Report. Submit daily CQC Reports as required by Section 01 45 04.00 10, CONTRACTOR QUALITY CONTROL. Electronically submit reports to the Government within 24 hours after the date covered by the report. Also provide the Government a signed, printed copy of the daily CQC report.

1.5.3.2 Deficiency Tracking.

The Contractor shall use QCS to track deficiencies. Deficiencies identified by the Contractor will be numerically tracked using QC punch list items. The Contractor shall maintain a current log of its QC punch list items in the QCS database. The Government will log the deficiencies it has identified using its QA punch list items. The Government's QA punch list items will be included in its export file to the Contractor. The Contractor shall regularly update the correction status of both QC and QA punch list items.

1.5.3.3 QC Requirements

Develop and maintain a complete list of QC testing and required structural and life safety special inspections required by the International Code Council (ICC), transferred and installed property, and user training requirements in QCS. Update all data on these QC requirements as work progresses, and promptly provide this information to the Government via QCS.

1.5.3.4 Three-Phase Control Meetings

The Contractor shall maintain scheduled and actual dates and times of preparatory and initial control meetings in QCS.

1.5.3.5 Labor and Equipment Hours

Log labor and equipment exposure hours on a daily basis. This data will be rolled up into a monthly exposure report.

1.5.3.6 Accident/Safety Reporting

The Government will issue safety comments, directions, or guidance whenever safety deficiencies are observed. The Government's safety comments will be included in its export file to the Contractor. Regularly update the correction status of the safety comments. In addition, utilize QCS to advise the Government of any accidents occurring on the jobsite. This brief supplemental entry is not to be considered as a substitute for completion of mandatory reports, e.g., ENG Form 3394 and OSHA Form 300.

1.5.3.7 Features of Work

The Contractor shall include a complete list of the features of work in the QCS database. A feature of work may be associated with multiple pay activities. However, each pay activity (see subparagraph "Pay Activity Data" of paragraph "Finances") will only be linked to a single feature of work.

1.5.3.8 Hazard Analysis

Use QCS to develop a hazard analysis for each feature of work included in the CQC Plan. The hazard analysis shall address any hazards, or potential hazards, that may be associated with the work

1.5.4 Submittal Management

The Contractor is responsible for developing a submittal register (ENG Form 4288) for this contract in accordance with Section 01 33 00 SUBMITTAL PROCEDURES, including completion of all data columns. Dates on which submittals are received and returned by the Government will be included in its export file to the Contractor. The Contractor shall use QCS to track and transmit all submittals. ENG Form 4025, submittal transmittal form, and the submittal register update shall be produced using QCS. QCS and RMS will be used to update, store and exchange submittal registers and transmittals, but will not be used for storage of actual submittals.

1.5.5 Schedule

Develop a construction schedule consisting of pay activities, in accordance with Section 01 32 17.00 20 NETWORK ANALYSIS SCHEDULES (NAS). This schedule shall be input and maintained in the QCS database either manually or by using the Standard Data Exchange Format (SDEF) (see Section 01 32 17.00 20 NETWORK ANALYSIS SCHEDULES (NAS). The updated schedule data shall be included with each pay request submitted by the Contractor.

1.5.6 Import/Export of Data

QCS includes the ability to export Contractor data to the Government and to import submittal register and other Government-provided data from RMS, and schedule data using SDEF.

1.6 IMPLEMENTATION

Contractor use of QCS as described in the preceding paragraphs is mandatory. Ensure that sufficient resources are available to maintain its QCS database, and to provide the Government with regular database updates. QCS shall be an integral part of the Contractor's management of quality control.

1.7 DATA SUBMISSION VIA CD-ROM

The Government-preferred method for Contractor's submission of QCS data is by using the Government's SFTP repository built into QCS export function. Other data should be submitted using E-mail with file attachment(s). For locations where this is not feasible, the Contracting Officer may permit use of CD-ROM for data transfer. Export data onto CDs using the QCS built-in export function. If used, submit CD-ROMs in accordance with the following:

1.7.1 File Medium

Submit required data on CD-ROM. They shall conform to industry standards used in the United States. All data shall be provided in English.

1.7.2 CD-ROM Labels

Affix a permanent exterior label to each CD-ROM submitted. The label shall indicate in English, the QCS file name, full contract number, contract name, project location, data date, name and telephone number of person responsible for the data.

1.7.3 File Names

The files will be automatically named by the QCS software. The naming convention established by the QCS software shall not be altered in any way by the Contractor.

1.8 MONTHLY COORDINATION MEETING

Update the QCS database each workday. At least daily/weekly or subject to agreement with the Contracting Officer, generate and submit an export file to the Government with schedule update, submittals, QC reports, RFI's and progress payment request. As required in Contract Clause "Payments", at least one week prior to submittal, meet with the Government representative to review the planned progress payment data submission for errors and omissions.

Make all required corrections prior to Government acceptance of the export file and progress payment request. Payment requests accompanied by incomplete or incorrect data submittals will be returned. The Government will not process progress payments until an acceptable QCS export file is received.

1.9 NOTIFICATION OF NONCOMPLIANCE

The Contracting Officer will notify the Contractor of any detected noncompliance with the requirements of this specification. Take immediate corrective action after receipt of such notice. Such notice, when delivered to the Contractor at the work site, will be deemed sufficient for the purpose of notification.

PART 2 PRODUCTS

Not used.

PART 3 EXECUTION

Not used.

-- End of Section --

SECTION TABLE OF CONTENTS

DIVISION 01 - GENERAL REQUIREMENTS

SECTION 01 45 04.00 10

CONTRACTOR QUALITY CONTROL

PART 1 GENERAL

1.1 REFERENCES
1.2 PAYMENT

PART 2 PRODUCTS (Not Applicable)

PART 3 EXECUTION

3.1 GENERAL REQUIREMENTS
3.2 QUALITY CONTROL PLAN
3.2.1 Content of the CQC Plan
3.2.2 Acceptance of Plan
3.2.3 Notification of Changes
3.3 COORDINATION MEETING
3.4 QUALITY CONTROL ORGANIZATION
3.4.1 Personnel Requirements
3.4.2 CQC System Manager
3.4.3 CQC Personnel
3.4.4 Additional Requirement
3.4.5 Organizational Changes
3.5 SUBMITTALS AND DELIVERABLES
3.6 CONTROL
3.6.1 Preparatory Phase
3.6.2 Initial Phase
3.6.3 Follow-up Phase
3.6.4 Additional Preparatory and Initial Phases
3.7 TESTS
3.7.1 Testing Procedure
3.7.2 Testing Laboratories
3.7.2.1 Capability Check
3.7.2.2 Capability Recheck
3.7.3 Onsite Laboratory
3.7.4 Furnishing or Transportation of Samples for Testing
3.8 COMPLETION INSPECTION
3.8.1 Punch-Out Inspection
3.8.2 Pre-Final Inspection
3.8.3 Final Acceptance Inspection
3.9 DOCUMENTATION
3.10 NOTIFICATION OF NONCOMPLIANCE

-- End of Section Table of Contents --

SECTION 01 45 04.00 10

CONTRACTOR QUALITY CONTROL

PART 1 GENERAL

1.1 REFERENCES

The publications listed below form a part of this specification to the extent referenced. The publications are referred to within the text by the basic designation only.

ASTM INTERNATIONAL (ASTM)

ASTM D 3740	(2004a) Minimum Requirements for Agencies Engaged in the Testing and/or Inspection of Soil and Rock as Used in Engineering Design and Construction
ASTM E 329	(2005b) Agencies Engaged in the Testing and/or Inspection of Materials Used in Construction

1.2 PAYMENT

Separate payment will not be made for providing and maintaining an effective Quality Control program, and all costs associated therewith shall be included in the applicable unit prices or lump-sum prices contained in the Bidding Schedule.

PART 2 PRODUCTS (Not Applicable)

PART 3 EXECUTION

3.1 GENERAL REQUIREMENTS

The Contractor is responsible for quality control and shall establish and maintain an effective quality control system in compliance with the Contract Clause titled "Inspection of Construction." The quality control system shall consist of plans, procedures, and organization necessary to produce an end product which complies with the contract requirements. The system shall cover all construction operations, both onsite and offsite, and shall be keyed to the proposed construction sequence. The site project superintendent will be held responsible for the quality of work on the job and is subject to removal by the Contracting Officer for non-compliance with the quality requirements specified in the contract. The site project superintendent in this context shall be the highest level manager responsible for the overall construction activities at the site, including quality and production. The site project superintendent shall maintain a physical presence at the site at all times, except as otherwise acceptable to the Contracting Officer, and shall be responsible for all construction and construction related activities at the site.

3.2 QUALITY CONTROL PLAN

The Contractor shall furnish for review by the Government, not later than fourteen (14) days after receipt of notice to proceed, the Contractor Quality Control (CQC) Plan proposed to implement the requirements of the Contract Clause titled "Inspection of Construction." The plan shall identify personnel, procedures, control, instructions, tests, records, and forms to be used. The Government will consider an interim plan for the first thirty (30) days of operation. Construction will be permitted to begin only after acceptance of the CQC Plan or acceptance of an interim plan applicable to the particular feature of work to be started. Work outside of the features of work included in an accepted interim plan will not be permitted to begin until acceptance of a CQC Plan or another interim plan containing the additional features of work to be started.

3.2.1 Content of the CQC Plan

The CQC Plan shall include, as a minimum, the following to cover all construction operations, both onsite and offsite, including work by subcontractors, designers of record, consultants, architect/engineers (AE), fabricators, suppliers, and purchasing agents:

a. A description of the quality control organization, including a chart showing lines of authority and acknowledgment that the CQC staff shall implement the three phase control system (see paragraph 3.6 "Control" for all aspects of the work specified. The staff shall include a CQC System Manager who shall report to the project superintendent.

b. The name, qualifications (in resume format), duties, responsibilities, and authorities of each person assigned a CQC function.

c. A copy of the letter to the CQC System Manager signed by an authorized official of the firm which describes the responsibilities and delegates sufficient authorities to adequately perform the functions of the CQC System Manager, including authority to stop work which is not in compliance with the contract. The CQC System Manager shall issue letters of direction to all other various quality control representatives outlining duties, authorities, and responsibilities. Copies of these letters shall also be furnished to the Government.

d. Procedures for scheduling, reviewing, certifying, and managing submittals, including those of subcontractors, designers of record, consultants, architect engineers (AE), offsite fabricators, suppliers, and purchasing agents. These procedures shall be in accordance with Section 01 33 00 SUBMITTAL PROCEDURES.

e. Control, verification, and acceptance testing procedures for each specific test to include the test name, specification paragraph requiring test, feature of work to be tested, test frequency, and person responsible for each test. (Laboratory facilities approved by the Contracting Officer shall be used.)

f. Procedures for tracking preparatory, initial, and follow-up control phases and control, verification, and acceptance tests including documentation.

g. Procedures for tracking construction deficiencies from identification through acceptable corrective action. These procedures shall establish verification that identified deficiencies have been corrected.

h. Reporting procedures, including proposed reporting formats.

i. A list of the definable features of work. A definable feature of work is a task which is separate and distinct from other tasks, has separate control requirements, and may be identified by different trades or disciplines, or it may be work by the same trade in a different environment. Although each section of the specifications may generally be considered as a definable feature of work, there are frequently more than one definable features under a particular section. This list will be agreed upon during the coordination meeting.

3.2.2 Acceptance of Plan

Acceptance of the Contractor's plan is required prior to the start of construction. Acceptance is conditional and will be predicated on satisfactory performance during the construction. The Government reserves the right to require the Contractor to make changes in his CQC Plan and operations including removal of personnel, as necessary, to obtain the quality specified.

3.2.3 Notification of Changes

After acceptance of the CQC Plan, the Contractor shall notify the Contracting Officer in writing of any proposed change. Proposed changes are subject to acceptance by the Contracting Officer.

3.3 COORDINATION MEETING

After the Postaward Conference, before start of construction, and prior to acceptance by the Government of the CQC Plan, the Contractor shall meet with the Contracting Officer or Authorized Representative and discuss the Contractor's quality control system. The CQC Plan shall be submitted for review a minimum of five (5) calendar days prior to the Coordination Meeting. During the meeting, a mutual understanding of the system details shall be developed, including the forms for recording the CQC operations, control activities, testing, administration of the system for both onsite and offsite work, and the interrelationship of Contractor's Management and control with the Government's Quality Assurance. Minutes of the meeting shall be prepared by the Government and signed by both the Contractor and the Contracting Officer. The minutes shall become a part of the contract file. There may be occasions when subsequent conferences will be called by either party to reconfirm mutual understandings and/or address deficiencies in the CQC system or procedures which may require corrective action by the Contractor.

3.4 QUALITY CONTROL ORGANIZATION

3.4.1 Personnel Requirements

The requirements for the CQC organization are a CQC System Manager, and sufficient number of additional qualified personnel to ensure safety and contract compliance. The Safety and Health Manager shall receive direction and authority from the CQC System Manager and shall serve as a member of

the CQC staff. Personnel identified in the technical provisions as requiring specialized skills to assure the required work is being performed properly will also be included as part of the CQC organization. The Contractor's CQC staff shall maintain a presence at the site at all times during progress of the work and have complete authority and responsibility to take any action necessary to ensure contract compliance. The CQC staff shall be subject to acceptance by the Contracting Officer. The Contractor shall provide adequate office space, filing systems and other resources as necessary to maintain an effective and fully functional CQC organization. Complete records of all letters, material submittals, shop drawing submittals, schedules and all other project documentation shall be promptly furnished to the CQC organization by the Contractor. The CQC organization shall be responsible to maintain these documents and records at the site at all times, except as otherwise acceptable to the Contracting Officer.

3.4.2 CQC System Manager

The Contractor shall identify as CQC System Manager an individual within the onsite work organization who shall be responsible for overall management of CQC and have the authority to act in all CQC matters for the Contractor. The CQC System Manager shall be a construction person with a minimum of five (5) years in related work. This CQC System Manager shall be on the site at all times during construction and shall be employed by the prime Contractor. The CQC System Manager shall be assigned no other duties. An alternate for the CQC System Manager shall be identified in the plan to serve in the event of the System Manager's absence. The requirements for the alternate shall be the same as for the designated CQC System Manager.

3.4.3 CQC Personnel

In addition to CQC personnel specified elsewhere in the contract, the Contractor shall provide as part of the CQC organization specialized personnel to assist the CQC System Manager for the following areas: civil, mechanical, electrical, structural, design quality control and submittals. These individuals may be employees of the prime or subcontractor; be responsible to the CQC System Manager; be physically present at the construction site during work on their areas of responsibility; have the necessary education and/or experience in accordance with the experience matrix listed herein. These individuals may perform other duties but must be allowed sufficient time to perform their assigned quality control duties as described in the Quality Control Plan.

Experience Matrix

	Area	Qualifications
a.	Civil	Graduate Civil Engineer with 5+ years experience in the type of work being performed on this project
b.	Mechanical	Graduate Mechanical Engineer with 5+ years experience in the type of work being performed on this project

Experience Matrix

	Area	Qualifications
c.	Electrical	Graduate Electrical Engineer with 5+ years experience in the type of work being performed on this project
d.	Structural	Graduate Structural Engineer with 5+ years experience in the type of work being performed on this project and blast analysis design
e.	Submittals	Submittal Clerk with 1+ years experience
f.	Design Quality Control Manager	Registered Architect or Professional Engineer with 5+ years experience in the work being performed on this project

3.4.4 Additional Requirement

In addition to the above experience and/or education requirements the CQC System Manager shall have completed the five (5) day course entitled "Construction Quality Management For Contractors". This course is periodically offered at the Construction Trades Training Cener (CTTC) in Jalalabad and other locations. the Contractor is advised to contact CTTC for enrollment.

3.4.5 Organizational Changes

The Contractor shall maintain the CQC staff at full strength at all times. When it is necessary to make changes to the CQC staff, the Contractor shall revise the CQC Plan to reflect the changes and submit the changes to the Contracting Officer for acceptance.

3.5 SUBMITTALS AND DELIVERABLES

Submittals, if needed, shall be made as specified in Section 01 33 00 SUBMITTAL PROCEDURES. The CQC organization shall be responsible for certifying that all submittals and deliverables are in compliance with the contract requirements.

3.6 CONTROL

Contractor Quality Control is the means by which the Contractor ensures that the construction, to include that of subcontractors and suppliers, complies with the requirements of the contract. At least three phases of control shall be conducted by the CQC System Manager for each definable feature of the construction work as follows:

3.6.1 Preparatory Phase

This phase shall be performed prior to beginning work on each definable feature of work, after all required plans/documents/materials are approved/accepted, and after copies are at the work site. This phase shall include:

a. A review of each paragraph of applicable specifications, reference codes, and standards. A copy of those sections of referenced codes and standards applicable to that portion of the work to be accomplished in the field shall be made available by the Contractor at the preparatory inspection. These copies shall be maintained in the field and available for use by Government personnel until final acceptance of the work.

b. A review of the contract drawings.

c. A check to assure that all materials and/or equipment have been tested, submitted, and approved.

d. Review of provisions that have been made to provide required control inspection and testing.

e. Examination of the work area to assure that all required preliminary work has been completed and is in compliance with the contract.

f. A physical examination of required materials, equipment, and sample work to assure that they are on hand, conform to approved shop drawings or submitted data, and are properly stored.

g. A review of the appropriate activity hazard analysis to assure safety requirements are met.

h. Discussion of procedures for controlling quality of the work including repetitive deficiencies. Document construction tolerances and workmanship standards for that feature of work.

i. A check to ensure that the portion of the plan for the work to be performed has been accepted by the Contracting Officer.

j. Discussion of the initial control phase.

k. The Government shall be notified at least 72 hours in advance of beginning the preparatory control phase. This phase shall include a meeting conducted by the CQC System Manager and attended by the superintendent, other CQC personnel (as applicable), and the foreman responsible for the definable feature. The results of the preparatory phase actions shall be documented by separate minutes prepared by the CQC System Manager and attached to the daily CQC report. The Contractor shall instruct applicable workers as to the acceptable level of workmanship required in order to meet contract specifications.

3.6.2 Initial Phase

This phase shall be accomplished at the beginning of a definable feature of work. The following shall be accomplished:

a. A check of work to ensure that it is in full compliance with contract requirements. Review minutes of the preparatory meeting.

b. Verify adequacy of controls to ensure full contract compliance. Verify required control inspection and testing.

c. Establish level of workmanship and verify that it meets minimum acceptable workmanship standards. Compare with required sample panels as appropriate.

d. Resolve all differences.

e. Check safety to include compliance with and upgrading of the safety plan and activity hazard analysis. Review the activity analysis with each worker.

f. The Government shall be notified at least 72 hours in advance of beginning the initial phase. Separate minutes of this phase shall be prepared by the CQC System Manager and attached to the daily CQC report. Exact location of initial phase shall be indicated for future reference and comparison with follow-up phases.

g. The initial phase should be repeated for each new crew to work onsite, or any time acceptable specified quality standards are not being met.

3.6.3 Follow-up Phase

Daily checks shall be performed to assure control activities, including control testing, are providing continued compliance with contract requirements, until completion of the particular feature of work. The checks shall be made a matter of record in the CQC documentation. Final follow-up checks shall be conducted and all deficiencies corrected prior to the start of additional features of work which may be affected by the deficient work. The Contractor shall not build upon nor conceal non-conforming work.

3.6.4 Additional Preparatory and Initial Phases

Additional preparatory and initial phases shall be conducted on the same definable features of work if: the quality of on-going work is unacceptable; if there are changes in the applicable CQC staff, onsite production supervision or work crew; if work on a definable feature is resumed after a substantial period of inactivity; or if other problems develop.

3.7 TESTS

3.7.1 Testing Procedure

The Contractor shall perform specified or required tests to verify that control measures are adequate to provide a product which conforms to contract requirements. Upon request, the Contractor shall furnish to the Government duplicate samples of test specimens for possible testing by the Government. Testing includes operation and/or acceptance tests when specified. The Contractor shall procure the services of a Corps of Engineers approved testing laboratory or establish an approved testing laboratory at the project site. The Contractor shall perform the following activities and record and provide the following data:

a. Verify that testing procedures comply with contract requirements.

b. Verify that facilities and testing equipment are available and comply with testing standards.

c. Check test instrument calibration data against certified standards.

d. Verify that recording forms and test identification control number system, including all of the test documentation requirements, have been prepared.

e. Results of all tests taken, both passing and failing tests, shall be recorded on the CQC report for the date taken. Specification paragraph reference, location where tests were taken, and the sequential control number identifying the test shall be given. If approved by the Contracting Officer, actual test reports may be submitted later with a reference to the test number and date taken. An information copy of tests performed by an offsite or commercial test facility shall be provided directly to the Contracting Officer. Failure to submit timely test reports as stated may result in nonpayment for related work performed and disapproval of the test facility for this contract.

3.7.2 Testing Laboratories

3.7.2.1 Capability Check

The Government reserves the right to check laboratory equipment in the proposed laboratory for compliance with the standards set forth in the contract specifications and to check the laboratory technician's testing procedures and techniques. Laboratories utilized for testing soils, concrete, asphalt, and steel shall meet criteria detailed in ASTM D 3740 and ASTM E 329.

3.7.2.2 Capability Recheck

If the selected laboratory fails the capability check, the Contractor will be assessed a charge of $3,000.00 to reimburse the Government for each succeeding recheck of the laboratory or the checking of a subsequently selected laboratory. Such costs will be deducted from the contract amount due the Contractor.

3.7.3 Onsite Laboratory

The Government reserves the right to utilize the Contractor's control testing laboratory and equipment to make assurance tests, and to check the Contractor's testing procedures, techniques, and test results at no additional cost to the Government.

3.7.4 Furnishing or Transportation of Samples for Testing

Costs incidental to the transportation of samples or materials shall be borne by the Contractor.

Coordination for each specific test, exact delivery location, and dates will be made through the Area Office.

3.8 COMPLETION INSPECTION

3.8.1 Punch-Out Inspection

Near the end of the work, or any increment of the work established by a time stated in the SPECIAL CONTRACT REQUIREMENTS Contract Clause 52.211-10, "Commencement, Prosecution, and Completion of Work", or by the specifications, the CQC Manager shall conduct an inspection of the work. A punch list of items which do not conform to the approved drawings and specifications shall be prepared and included in the CQC documentation, as required by paragraph DOCUMENTATION. The list of deficiencies shall include the estimated date by which the deficiencies will be corrected. The CQC System Manager or staff shall make a second inspection to ascertain that all deficiencies have been corrected. Once this is accomplished, the Contractor shall notify the Government that the facility is ready for the Government Pre-Final inspection.

3.8.2 Pre-Final Inspection

The Government will perform the pre-final inspection to verify that the facility is complete and ready to be occupied. A Government Pre-Final Punch List may be developed as a result of this inspection. The Contractor's CQC System Manager shall ensure that all items on this list have been corrected before notifying the Government, so that a Final inspection with the customer can be scheduled. Any items noted on the Pre-Final inspection shall be corrected in a timely manner. These inspections and any deficiency corrections required by this paragraph shall be accomplished within the time slated for completion of the entire work or any particular increment of the work if the project is divided into increments by separate completion dates.

3.8.3 Final Acceptance Inspection

The Contractor's Quality Control Inspection personnel, plus the superintendent or other primary management person, and the Contracting Officer's Representative shall be in attendance at the final acceptance inspection. Additional Government personnel including, but not limited to, those from Base/Post Civil Facility Engineer user groups, and major commands may also be in attendance. The final acceptance inspection will be formally scheduled by the Contracting Officer based upon results of the Pre-Final inspection. Notice shall be given to the Contracting Officer at least 14 days prior to the final acceptance inspection and shall include the Contractor's assurance that all specific items previously identified to the Contractor as being unacceptable, along with all remaining work performed under the contract, will be complete and acceptable by the date scheduled for the final acceptance inspection. Failure of the Contractor to have all contract work acceptably complete for this inspection will be cause for the Contracting Officer to bill the Contractor for the Government's additional inspection cost in accordance with the contract clause titled "Inspection of Construction".

3.9 DOCUMENTATION

The Contractor shall maintain current records providing factual evidence that required quality control activities and/or tests have been performed. These records shall include the work of subcontractors and suppliers and shall be on an acceptable form that includes, as a minimum, the following information:

a. Contractor/subcontractor and their area of responsibility.

b. Operating plant/equipment with hours worked, idle, or down for repair.

c. Work performed each day, giving location, description, and by whom. When Network Analysis (NAS) is used, identify each phase of work performed each day by NAS activity number.

d. Test and/or control activities performed with results and references to specifications/drawings requirements. The control phase shall be identified (Preparatory, Initial, Follow-up). List of deficiencies noted, along with corrective action.

e. Quantity of materials received at the site with statement as to acceptability, storage, and reference to specifications/drawings requirements.

f. Submittals and deliverables reviewed, with contract reference, by whom, and action taken.

g. Offsite surveillance activities, including actions taken.

h. Job safety evaluations stating what was checked, results, and instructions or corrective actions.

i. Instructions given/received and conflicts in plans and/or specifications.

j. Contractor's verification statement.

These records shall indicate a description of trades working on the project; the number of personnel working; weather conditions encountered; and any delays encountered. These records shall cover both conforming and deficient features and shall include a statement that equipment and materials incorporated in the work and workmanship comply with the contract. The original and one copy of these records in report form shall be furnished to the Government daily within 24 hours after the date covered by the report, except that reports need not be submitted for days on which no work is performed. As a minimum, one report shall be prepared and submitted for every 7 days of no work and on the last day of a no work period. All calendar days shall be accounted for throughout the life of the contract. The first report following a day of no work shall be for that day only. Reports shall be signed and dated by the CQC System Manager. The report from the CQC System Manager shall include copies of test reports and copies of reports prepared by all subordinate quality control personnel.

3.10 NOTIFICATION OF NONCOMPLIANCE

The Contracting Officer will notify the Contractor of any detected noncompliance with the foregoing requirements. The Contractor shall take immediate corrective action after receipt of such notice. Such notice, when delivered to the Contractor at the work site, shall be deemed sufficient for the purpose of notification. If the Contractor fails or refuses to comply promptly, the Contracting Officer may issue an order stopping all or part of the work until satisfactory corrective action has been taken. No part of the time lost due to such stop orders shall be made the subject of claim for extension of time or for excess costs or damages

by the Contractor.

-- End of Section --

SECTION TABLE OF CONTENTS

DIVISION 01 - GENERAL REQUIREMENTS

SECTION 01 62 35

RECYCLED / RECOVERED MATERIALS

PART 1 GENERAL

1.1 REFERENCES
1.2 OBJECTIVES
1.3 EPA DESIGNATED ITEMS INCORPORATED IN THE WORK
1.4 EPA PROPOSED ITEMS INCORPORATED IN THE WORK
1.5 EPA LISTED ITEMS USED IN CONDUCT OF THE WORK BUT NOT INCORPORATED IN THE WORK

-- End of Section Table of Contents --

SECTION 01 62 35

RECYCLED / RECOVERED MATERIALS

PART 1 GENERAL

1.1 REFERENCES

The publications listed below form a part of this specification to the extent referenced. The publications are referred to within the text by the basic designation only.

U.S. NATIONAL ARCHIVES AND RECORDS ADMINISTRATION (NARA)

40 CFR 247	Comprehensive Procurement Guideline for Products Containing Recovered Materials

1.2 OBJECTIVES

Government procurement policy is to acquire, in a cost effective manner, items containing the highest percentage of recycled and recovered materials practicable consistent with maintaining a satisfactory level of competition without adversely affecting performance requirements or exposing suppliers' employees to undue hazards from the recovered materials. The Environmental Protection Agency (EPA) has designated certain items which must contain a specified percent range of recovered or recycled materials. EPA designated products specified in this contract comply with the stated policy and with the EPA guidelines. The Contractor shall make all reasonable efforts to use recycled and recovered materials in providing the EPA designated products and in otherwise utilizing recycled and recovered materials in the execution of the work.

1.3 EPA DESIGNATED ITEMS INCORPORATED IN THE WORK

Various sections of the specifications contain requirements for materials that have been designated by EPA as being products which are or can be made with recovered or recycled materials. These items, when incorporated into the work under this contract, shall contain at least the specified percentage of recycled or recovered materials unless adequate justification (non-availability) for non-use is provided. When a designated item is specified as an option to a non-designated item, the designated item requirements apply only if the designated item is used in the work.

1.4 EPA PROPOSED ITEMS INCORPORATED IN THE WORK

Products other than those designated by EPA are still being researched and are being considered for future Comprehensive Procurement Guideline (CPG) designation. It is recommended that these items, when incorporated in the work under this contract, contain the highest practicable percentage of recycled or recovered materials, provided specified requirements are also met.

1.5 EPA LISTED ITEMS USED IN CONDUCT OF THE WORK BUT NOT INCORPORATED IN THE WORK

There are many products listed in 40 CFR 247 which have been designated or proposed by EPA to include recycled or recovered materials that may be used by the Contractor in performing the work but will not be incorporated into the work. These products include office products, temporary traffic control products, and pallets. It is recommended that these non-construction products, when used in the conduct of the work, contain the highest practicable percentage of recycled or recovered materials and that these products be recycled when no longer needed.

-- End of Section --

US Army Corps of Engineers
Middle East District

TETRA TECH

SOF HELICOPTER APRON
HERAT, AFGHANISTAN

W519LE-12-R-0007

Technical Specifications

Submitted to:

USACE Middle East District
201 Prince Frederick Drive
Winchester, VA 22602

Prepared by:

Tetra Tech
One Grant Street
Framingham, MA 01701

Final Corrected Design Update 3

November 16, 2011

FINAL CORRECTED DESIGN UPDATE 3
TECHNICAL SPECIFICATIONS
TABLE OF CONTENTS

		DATE
DIVISION 01 – GENERAL REQUIREMENTS		
01 80 00.12 10	TECHNICAL REQUIREMENTS	11/16/11
DIVISION 31 – EARTHWORK		
31 00 00	EARTHWORK	11/10/11
DIVISION 32 – EXTERIOR IMPROVEMENTS		
32 11 23	GRADED-CRUSHED AGGREGATE BASE COURSE	11/10/11
32 12 10	BITUMINOUS TACK AND PRIME COATS	11/10/11
32 12 15	HOT-MIX ASPHALT (HMA) FOR AIRFIELDS	11/10/11
32 13 11	CONCRETE PAVEMENT FOR AIRFIELDS AND OTHER HEAVY-DUTY PAVEMENTS	11/10/11
32 13 73	COMPRESSION JOINT SEALS FOR CONCRETE PAVEMENTS	11/10/11
32 15 00	AGGREGATE SURFACE COURSE	11/10/11
32 17 24.00 10	PAVEMENT MARKINGS	11/10/11
DIVISION 34 – TRANSPORTATION		
34 73 13	MOORING AND GROUNDING POINTS FOR AIRCRAFT	11/10/11

SECTION 01 80 00.12 10

TECHNICAL REQUIREMENTS

PART 1 GENERAL

1.1 Contractor's Design and Construction

The Contractor's design and construction must comply with technical requirements contained herein. The Contractor shall provide design and construction using the best blend of cost, construction efficiency, system durability, ease of maintenance and environmental compatibility.

1.1.1 Design and Product Requirements

These design and product requirements are minimum requisites. Variations shall be submitted in accordance with Section 01 33 00.12 10 entitled SUBMITTAL PROCEDURES FOR DESIGN-BUILD PROJECT. All variations must be approved by the Contracting Officer. Unless otherwise specified, all of the materials and equipment to be installed in this project shall comply with a recognized standard for the intended use. The Unified Master Reference List for ASTM, ASME, etc., located at www.ccb.org/docs/ufgshome/ufgstoc.htm identifies the titles and approval dates.

1.1.2 Asbestos Containing Materials

Asbestos containing material (ACM) will not be used in the design and construction of this project. If no other material is available which will perform the required function or where the use of other material would be cost prohibitive, a waiver for the use of asbestos containing materials must be obtained from the Contracting Officer.

1.1.3 Limitation of Working Space

The Contractor shall, except where required for service connections or other special reasons confine his operations strictly within the boundaries of the site. Workmen will not be permitted to trespass on adjoining property. Any operations or use of space outside the boundaries of the site shall be by arrangement with all interested parties. It must be emphasized that the Contractor must take all practical steps to prevent his workmen from entering adjoining property and in the event of trespass occurring the Contractor will be held entirely responsible.

1.1.4 Subcontractors

Compliance with the provisions of this section by subcontractors will be the responsibility of the Contractor.

1.1.5 Temporary Structures

The Contractor shall erect suitable temporary fences, lighting, and necessary structures to safeguard the site, materials and plant against damage or theft and for the protection of the general public and shall adequately maintain the same throughout the course of the contract. All utilities required to support temporary structures during the contract period of performance shall be provided by the Contractor.

1.2 Specifications

All specifications except for those included in this RFP shall be developed by the Contractor in accordance with this section and Section 01 33 00.12 10. The specifications included in this RFP shall be used verbatim and not edited by the Design-Build Contractor.

1.3 Site Conditions
(a) Site Location: Herat Airfield, Herat, Afghanistan.
(b) Site Elevation: 984 Meters, Above Sea Level.
(c) Ambient Temperatures: Summer 39 degree C; winter -2.0 degree C.
(d) Maximum 39 degrees C dry bulb, 23.9 degrees C wet bulb.
(e) Atmospheric Conditions: Dry and Dust-laden.

2. CIVIL AND SITE DEVELOPMENT

2.1 General.
The contractor shall perform design and construction services as required to provide a complete and usable site at the location shown on the drawings. The site requires some demolition, access roads, connection of utilities, and a fire suppression system with water capacities as indicated in the following sections.

The civil site development includes the following items of work:
a. Topographic Survey
b. Environmental Protection
c. Demolition
d. Utility Infrastructure - Design & Construct
e. Grading and Drainage - Design & Construct
f. Pavements and Siting - Design & Construct

2.2 Drawings.

The civil designs shall be based on Unified Facilities Criteria/United States Air Force/Army Technical Manuals, the references listed below, or other approved standards. All required documents, including drawings, specifications, and design analysis, shall be prepared in accordance with Section 03 33 00.12 10 SUBMITTAL PROCEDURES FOR DESIGN-BUILD PROJECT. The design analysis shall include detailed calculations, additional information required to clearly define the project, and the information listed below, when applicable. The Contractor shall review the details provided and make adjustments, if necessary, before applying them to the project.

The RFP drawings include a general site location plan, demolition, site plan, pavement marking, pavement section and pavement details. The site plan provided in the RFP indicates approximate existing conditions and shall be verified by the contractor with a complete topographic survey of the site prior to starting design.

Existing and proposed utility locations are subject to verification by the Contractor and approval of the Contracting Officer. In addition to all other required Civil plans and details the D-B contractor shall provide plans and details for Aircraft Mooring and Grounding Points.

2.3 Design Criteria.

USACE Middle East District Design Instructions Manual,

Pavement-Transportation Computer Assisted Structural Engineering (PCASE) Program, v2.08. http://www.pcase.com

UNIFIED FACILITIES CRITERIA (UFC)

Uniform Facility Criteria (UFC) documents are available on the Internet at http://www.hnd.usace.army.mil/techinfo/engpubs.htm

UFC 3-210-01A (2004) Area Planning, Site Planning, and Design

UFC 3-210-06A (2004) Site Planning and Design

UFC 3-230-01 (2006) Surface Drainage Design (FAA AC150/5320-5C)

UFC 3-230-06A (2004) Subsurface Drainage Design

UFC 3-210-02 (2004) POV Site Circulation and Parking

UFC 3-240-04A (2004) Water Supply: Water Distribution

UFC 3-250-01FA (2004) Pavement Design for Roads, Streets, Walks and Open Storage Areas

UFC 3-250-3 (2001) Standard Practice Manual for Flexible Pavements

UFC 3-250-04FA (2004) Standard Practice Manual for Concrete Pavements

UFC 3-250-07 (2004) Standard Practice for Pavement Recycling

UFC 3-250-08FA (2004) Standard Practice for Sealing Joints and Cracks in Rigid and Flexible Pavements

UFC 3-250-11 (2004) Soil Stabilization for Pavements

UFC 3-250-18FA General Provisions and Geometric Design for Roads, Streets.

(2004) Walks, and Open Storage Areas

UFC 3-260-01 (2008) Airfield and Heliport Planning and Design

UFC 3-260-02 (2001) Pavement Design for Airfields

UFC 3-535-01 (2005) Visual Air Navigation Facilities

UFC 3-535-02 (2002) Design Drawings for Visual Air Navigation Facilities

UFC 3-600-01 (2006) Fire Protection Engineering for Facilities

AIR FORCE ENGINEERING TECHNICAL LETTER (ETL)

ETL 01-20 (2001) Guidelines for Airfield Frangibility Zones

ETL 02-15 (2002) Fire Protection Engineering Criteria Letter New Aircraft Facilities

ETL 04-02 (2004) Standard Airfield Pavement Marking Schemes

AIR FORCE TECHNICAL LETTER (TL)

TL 04-4-1 (2004) Trenchless Technology (TT) for Crossing Air Force

Pavements

AIR FORCE TECHNICAL INSTRUCTION (AFI)

AFI 32-1042 (2005) Standards for Marking Airfield

ARMY TECHNICAL INSTRUCTION (TI)

TI 8-222-08 (1999) Standard Practice Manual for Flexible Pavements

ARMY FIELD MANUAL (FM)

FM 5-430-00-2 (2006) Planning and Design of roads, airfields and Heliports in the Theater of Operations - Airfield and Heliport Design

ARMY ENGINEERING TECHNICAL LETTER (ETL)

ETL 1110-3-394 (1991) Aircraft Characteristics for Airfield-Heliport Design and Evaluation

AMERICAN CONCRETE INSTITUTE (ACI)

ACI 318 (2008) Building Code Requirements for Structural Concrete

ACI 305R (1999) Hot Weather Concrete

AMERICAN SOCIETY OF CIVIL ENGINEERS (ASCE)

ASCE 7 (2005) Minimum Design Loads for Buildings and Other Structures

AMERICAN SOCIETY FOR TESTING AND MATERIALS (ASTM)

ASTM A 615 (2007) Deformed and Plain Billet-Steel Bars for Concrete Reinforcement

ASTM A 185 (2007) Steel Welded Wire Fabric, Plain for Concrete Reinforcement,

AMERICAN INSTITUTE OF STEEL CONSTRUCTION (AISC)

AISC 325 Steel Construction Manual, 13th Edition

INTERNATIONAL CODE COUNCIL INCORPORATED

IBC (2009) International Building Code

NATIONAL FIRE PROTECTION ASSOCIATION (NFPA)

NFPA 415 (2008) Standard on Airport Terminal Buildings, Fueling Apron Drainage, and Loading Walkways

USCENTCOM FORCE PROTECTION STANDARDS

OPORD 05-0 Force Protection Construction Standards (Appendix V)

AMERICAN ASSOCIATION OF STATE HIGHWAY AND TRANSPORTATION OFFICIALS (AASHTO)

LRFD Bridge Design Specifications, 5th Edition with 2010 Interim Revision

INTERNATIONAL CIVIL AVIATION ORGANIZATION (ICAO)

ICAO Annex 14, Aerodromes, Volume 1 Aerodrome Design and Operations.

2.4 Studies Supporting the Final Design

To accomplish the work contained in this RFP, the contractor is required to publish design studies to document the existing site conditions before proceeding with the design and construction of the facilities and pavements. Included in this work are a topographic survey, a geotechnical survey and a hydrologic study. Report formats are listed in Section 01 33 00.12 10 SUBMITTAL PROCEDURES FOR DESIGN-BUILD PROJECT.

2.4.1 Site Survey.

Following the criteria in Appendix "A" of this section and submitted in accordance with Section 01 33 00.12 10 SUBMITTAL PROCEDURES FOR DESIGN-BUILD and attachments to Appendix "A" of this section, a survey shall be produced of the project site.

Upon completion of the construction, the original survey shall be updated with an as-built survey of the site as constructed. The as-built survey shall be submitted to the COR for approval.

The original and as-built survey shall include location and elevation of all relevant existing site features within the project limits. This includes the elevation and location of buildings (new and existing), roadways, pads, other structures, drainage systems, and utilities (subsurface and overhead) within 5 meters of the project sites.

2.4.2 Hydrologic Study

The Contractor shall investigate and assess the adequacy of the existing drainage systems to handle the runoff from the drainage areas that surround the project sites.

The Contractor shall analyze the 10-year and 100-year storm event and determine the ponding volumes, areas and elevations. The Contractor shall calculate in tabular form the hydraulic grade line (HGL) as described in UFC 3-230-01 section 6-4. If the 100-year storm event results in ponding in excess of criteria, storm water detention shall be provided as necessary to meet pending criteria. Detention shall be located away from the airfield to the extent possible.

2.4.3 Geotechnical Study

The Contractor shall produce a detailed geotechnical report containing the field exploration and testing results, laboratory testing results, evaluations, recommendations, calculations and descriptive supporting text. Information in the report shall include, but not be limited to: existing geotechnical (e.g., surface and subsurface) conditions, location of subsurface exploration logs, exploration point, foundations selected, bearing capacity, pavement design criteria (e.g., CBR values, K Values), ground water levels, and construction materials (e.g., concrete cement, asphalt and aggregates). Two copies of the detailed geotechnical report shall be submitted to the Contracting Officer. Additional requirements are contained in paragraph 5.0 below.

2.5 Environmental Protection

2.5.1 Applicable Regulations

The Contractor shall comply with all laws, rules, regulations or standards concerning environmental pollution control and abatement at Herat Airfield.

2.5.2 Notification

The Contracting Officer will notify the Contractor in writing of any observed non-compliance with the paragraph entitled ENVIRONMENTAL PROTECTION. The Contractor shall immediately take corrective action. If the Contractor fails or refuses to promptly take corrective action, the Contracting Officer may issue an order stopping all or part of the work until satisfactory corrective action has been taken. No extension of time or damages will be awarded to the Contractor unless it was later determined that the Contractor was in compliance.

2.5.3 Spillages

Measures shall be taken to prevent chemicals, fuels, oils, greases, bituminous materials, waste washings, herbicides and insecticides, and construction materials from polluting the construction site and surrounding area.

Any spill that threatens or enters the sewer system should be reported immediately to the Fire Department. These spills can be categorized in two (2) groups: hazardous chemicals and other materials (e.g., paint, tar). The other materials, as well as the hazardous materials, may have potential negative impact to the environment, as well, specifically to the storm water system. Any type of spill shall be reported to the Fire Department.

2.5.4 Disposal

Disposal of any materials, wastes, effluents, trash, garbage, oil, grease, chemicals, etc., shall be subject to the approval of the Contracting Officer. Burning at the project site for the disposal of refuse and debris will not be permitted.

2.6 Hazardous Materials and Contamination

The Government does not anticipate that the Contractor will be required to remove or dispose of any hazardous materials or waste during the site preparation phase of this project.

2.7 Topographic Survey

2.7.1 Topographic Survey

The Contractor shall perform a topographic survey and establish all necessary permanent bench marks for vertical and horizontal controls. The Contractor shall perform all necessary topographic surveying/mapping as required for the design of the site, grading, utilities, roads, etc. The topographic survey shall be performed in accordance with Appendix "A" and associated attachments. The topographic survey shall be submitted in accordance with Section 01 33 00.12 10 SUBMITTAL PROCEDURES FOR DESIGN-BUILD PROJECT. Contractor shall establish permanent bench marks.

Upon completion of the construction, the original survey shall be updated with an as-built survey of the site as constructed. The as-built survey shall

be submitted to the COR for approval.

The original and as-built survey shall include location and elevation of all relevant existing site features within the project limits. This includes the elevation and location of buildings (new and existing), roadways, and pads, other structures, drainage systems, and utilities (subsurface and overhead) within 5 meters of the project sites.

2.8 Demolition and Removal.

If demolition is required, the contractor shall submit a demolition plan including a schedule, haul routes, and storage areas. The demolition plan shall be submitted 30 days prior to commencement of work. The work includes demolition and removal of resulting rubbish and debris. Rubbish and debris shall be removed daily, unless otherwise directed, to avoid accumulation at the demolition site, do not allow accumulations inside or outside the buildings.

The Contractor shall stake-out the project boundaries before starting work. Existing utilities that interfere with this project will be relocated. At all times during demolition the integrity of the flight line perimeter shall be maintained through the use of suitable temporary protective measures in any areas where existing fence has been removed and new fence is not complete. Rubbish and debris shall be removed daily, unless otherwise directed, to avoid accumulation at the demolition site, do not allow accumulations inside or outside the buildings.

Any demolition debris shall be removed from the site. The COR will designate a site off base. Debris shall be removed and transported in a manner that prevents spillage on streets or adjacent areas.

In the interest of occupational safety and health, the work shall be performed in accordance with EM 385-1-1, Section 23, Demolition and other applicable Sections. In the interest of conservation, salvage shall be pursued to the maximum extent possible. Use of explosives will not be permitted. Existing structures shall be removed to include the foundations. The resulting excavation will be brought back to natural grade with fill material.

Double saw cut and remove concrete and asphaltic concrete paving and slabs including aggregate base as necessary. Provide neat saw cuts at limits of pavement removal as necessary. Pavements shall be removed in a manner such to ensure no damage to adjacent existing pavements that will remain in place. Adjoining airfield pavements shall be cut to full depth for the entire length of contact with the proposed pavements and jointed as needed.

2.9 Excavation

Any hand digging, driving of pickets or excavation of any kind requires a Dig Permit. If work requires digging, the Contractor must obtain a digging permit from the Contracting Officer.

When digging must be done, backfill the resulting hole/trench with clean fill or material as described in the Government provided specification or Contractor provided specification as applicable, at the earliest opportunity. If digging is to be done manually, then the Contractor must submit Site Specific Safety and Health Plan (SSHP) which meets EM 385-1-1, Section 28.

2.10 New Site Design and Construction.

The concept site plan drawings present a suggested geometric layout for the site work. The Contractor shall design the site features shown on the Site Plan and otherwise specified in the RFP. This site plan includes the approximate location of the apron utility area which includes fire pump house, generators, fuel tank and shelters. This schematic design must be verified by the contractor. The final site is to supply parking for six (6) CH-47 helicopters, plus two (2)C-12 aircraft.

The Contractor shall ensure the facilities are sited in compliance with the attached drawings and additional requirements stated herein.

Airfield pavement geometrics shall be in accordance with UFC 3-260-01, FM 5-430-00-2 and ETL 1110-3-394 and other manufacturer's manuals. Vehicle pavement geometrics shall be in accordance with UFC 3-210-02. Templates showing the turning movements for design aircraft that are published in the ETL-1110-3-394 Aircraft Turning Diagrams shall be included in design submittals. Design site entrances, exits, service drives, and special circulation areas to accommodate the turning radius of the controlling aircraft. Provide the aircraft clearances that are required in the UFC 3-260-01 Airfield and Heliport Planning and Design manual. The design aircraft for this site's geometric properties shall be the CH-47 for the rotary wing and C-12 for the fixed wing aircraft.

The site plan prepared by the Contractor shall show geometric design of the site, including applicable dimensions of facilities, taxiways, aprons, pavements, equipment shelters, buildings, utilities, set back lines, fences, etc.
At all times during construction the integrity of the flightline perimeter shall be maintained through the use of suitable temporary protective measures in any areas where existing fence has been removed and new fence is not complete.

2.11 Airfield Pavement Design

The Base Bid shall consist of Air Force Medium load Portland Cement Concrete pavement for the connecting taxiway, Army Class II (IFR) Heliport load Portland Cement Concrete pavement for the parking apron and Asphaltic pavement shoulders. The apron shall consist of same direction taxi in and taxi out parking for six (6) CH-47 helicopters, plus two (2) C-12 aircraft. The connecting taxiway shall extend from the parking apron to the existing runway.

Bid Option 1 shall consist of an expansion of the apron using the Army Class II (IFR) Heliport load Portland Cement Concrete pavement for the parking apron and Asphaltic pavement shoulders. The apron shall consist of taxi through parking for six (6) CH-47 helicopters, plus two (2) C-12 aircraft.

The airfield pavements for the SOF Helicopter Apron shall be designed in accordance with the technical requirements described herein and in accordance with UFC 3-250-18FA, UFC 3-250-09FA, UFC 3-250-01FA, and UFC 3-260-02. The technical requirements described herein shall govern. The pavement designs shall be conducted with the Pavement-Transportation Computer Assisted Structural Engineering (PCASE) program. The pavement designs shall utilize the aircraft and ground vehicle types, weights, and traffic passes specified below. The designs shall be submitted for review to the Contracting Officer prior to any construction.

All Rigid Pavement shall be designed as rigid pavement with a minimum of 150

mm of Graded Crushed Aggregate Base Course. Rigid pavements shall be jointed plain concrete pavement with compression joint seals in accordance with Specification 32 13 73 COMPRESSION JOINT SEALS FOR CONCRETE PAVEMENTS. The material used for constructing the airfield pavements shall be in accordance with the specifications of this contract and shall consider locally available cement, sand, aggregates, weather conditions and the results of the geotechnical investigation. These specifications shall be used verbatim and not edited by the Design-Build Contractor.

All compaction requirements shall be based on ASTM D1557, Method C.

All airfield pavements shall be designed for a 20-year life-span and shall be based on site-specific geotechnical information.

The pavement design for the SOF Helicopter Apron was designed based on traffic pattern per UFC 03-260-02. The pavement for the Apron Entrance Taxiway was designed based on Air Force medium traffic pattern per UFC 03-260-02.
The minimum pavement sections shall be as shown on the drawings below.

The minimum Army Class II (IFR) Heliport airfield pavement section shall be:

Apron
210 mm of Portland Cement Concrete, JPCP
150 mm Graded Crushed Aggregate Base compacted to 100%
150 mm Natural Subgrade compacted to 95%

The Contractor has the option of using Asphalt or Portland Cement Concrete for the airfield shoulders.

The minimum Asphalt airfield shoulder pavement section shall be:
50 mm Asphalt Surface Course
210 mm Graded Crushed Aggregate Base Course compacted to 100%
150 mm Natural Subgrade compacted to 100%

The minimum airfield shoulder section shall be:
175 mm Portland and Cement Concrete Surface Course
150 mm Graded Crushed Aggregate Base Course
150 mm Natural Subgrade compacted to 95%

2.12 Pavement Marking, Markers and Signage

2.12.1 Airfield Pavement Marking

Pavement marking is required on all airfield pavements in conformance with the ETL 04-02 and AFI 32-1042 and as shown on the drawings. Stop blocks shall be painted at fixed wing aircraft parking positions to indicate the intended location for the aircraft nose wheel when parked. Static ground points shall be marked per the drawings. All markings on concrete shall be outlined with black paint, which shall extend at least 150 mm beyond the outside edge of the markings.

2.13 Instrument Holding Position.

Runways served by precision instrument navigation aids may require an instrument holding position be marked in addition to the VFR holding position. Where practicable, collocate these markings and mark only the VFR holding position. If required, locate the instrument holding position further from the active runway to prevent taxiing or holding aircraft from

interfering with signals transmitted to inbound aircraft during Instrument Meteorological Conditions (IMC). This hold position is configured differently from a VFR hold position and is augmented with the letters "INST" on the runway side of the line. The letters are to be read when facing the runway. They are marked in block letters 1829 millimeters (6 feet) high by 610 millimeters (2 feet) wide, spaced 305 millimeters (1 foot) apart. The letters are formed with a 152-millimeter (6-inch) stroke. The "INST" designator must be placed symmetrically between the taxiway centerline and the taxiway edge or edge marking on the left side of the centerline. For hold lines over 61 meters (200 feet) long, mark the "INST" designator at intervals not exceeding 45.7 meters (150 feet). Locations for the instrument hold line vary, depending on the type and capability of the landing aid; locate them in accordance with the following paragraphs.

2.14 Revetment (Bid Option 2)

The airfield revetments shall be provided by others. The Contractor shall coordinate with the Contracting Officer to ensure that the helicopter parking spaces are located to accommodate the size and type of revetment to be provided. The Contractor shall submit a layout plan with appropriate dimension for approval prior to construction. The revetment shall be a minimum of 2.5m wide, 5m high with a concrete cap and shall be filled with soil.

2.15 Tiedown & Grounding Points

2.15.1 Tiedown Points

Air Force aircraft tiedown points shall be constructed in accordance with UFC 3-260-01 B11 and Specification 34 73 13 AIR FORCE TIEDOWN, ARMY MOORING AND GROUNDING POINTS FOR AIRCRAFT.

For maximum flexibility, they may be placed in 4.6-meter (15-foot), 6.1-meter (20-foot), or a 9.1-meter (30-foot) grids, or offset grids. At minimum, place tiedowns as indicated in aircraft Technical Orders.
Mooring points shall be at the locations shown and in accordance with UFC 3-260-01.

2.15.2 Static Grounding and Tiedown Points

Static grounding and tiedown points shall be constructed in accordance with the drawings, UFC 3-260-01 Section 11 - Figures B11-14 and B11-15, and Specification 34 73 13 AIR FORCE TIEDOWN, ARMY MOORING AND GROUNDING POINTS FOR AIRCRAFT. Every static grounding point shall be interconnected to other static grounding points and other grounding systems, in addition to complying with the static grounding requirement. If tiedowns are intended to also be used as static grounds, it is required that a ground rod be installed and rebar size increased as shown on Sheet C-504. When a ground rod is included, bond it to the tiedown bar.

2.16 Earthwork, Site Grading and Off-site Drainage

2.16.1 Earthwork

Perform all earthwork necessary to provide apron pads and taxiways that meets UFC requirements for taxiway aprons and provides access from the surrounding airfield by design vehicles.

2.16.2 Site Grading.

The topographic survey shall be used in designing the grading and drainage of the site. The Contractor will provide all necessary site grading to insure adequate drainage so that no utilities or manholes, facilities or pavements will be flooded due to a 10-year design rainfall. Drainage of the area should be compatible with the existing terrain.

Finished grade shall slope away from the project sites and provide positive drainage. Swales and cross-culverts shall be provided as required and have a minimum longitudinal gradient of 0.5%. Side slopes of swales within the infield shall follow UFC 3-260-01 criteria.

Provide a positive crown or sheet drainage to all aircraft areas. Overland flow shall be used to the maximum extent possible. The grading and drainage plans shall be in accordance with UFC 3-230-17FA and UFC 3-250-18FA and shall be prepared in 0.25m contours.

The finished grade adjacent to future facilities and fabric shelters shall be designed to slope away from the facility at a minimum rate of 2%.

The taxiways shall be designed to match the elevation of the adjoining runways at all connection points.

Plans shall show existing contours (0.25 m) and new contours (0.25m) and spot grades to indicate new grading, finished floor and pavement elevations, drainage swales, etc.

2.16.3 Storm Drainage

2.16.3.1 Storm Drainage.

The Contractor will provide necessary site grading and provide drainage structures to ensure adequate drainage, so that no water shall pond within 23 meter of any paved area or building resulting from a 10-year recurrence storm and no water shall pond within 8 meters of the runway resulting from a 100-year recurrence storm.

All storm drainage system designs shall be in accordance with references contained herein. Storm drainage system design shall consist of swales, side slopes, and culvert piping where necessary to provide adequate drainage for the project sites. All storm drainage piping located in traffic areas shall be rated to withstand wheel loading from the design vehicle.
Detention basins, if needed shall have side slopes not steeper than 4:1 (horizontal: vertical). Erosion control measures using rock, geotextiles, or other materials shall be included as required to stabilize erodible soil conditions. Provide aggregate blanket at the base and side slopes of detention ponds. The aggregate shall be crushed stone, 35 mm to 50 mm across, applied 50 mm deep. Detention sites located near subsurface utilities shall ensure they are protected from infiltration inflows with devices such as manhole seals and/or pond liners.

Design flows for storm sewers shall produce velocities suitable to flush collected dust and debris accumulation during storm events.
Minimum gravity storm sewer requirements are to be in compliance with UFC 3-230-06A. Unless otherwise directed by the CO, the contractor shall use reinforced concrete pipe exclusively.

Contractor shall coordinate hydrologic study and storm water management design of the project with the Contracting Officer, the adjacent future and

current construction projects and the existing runway storm water system. The contractor is also responsible for obtaining all local permits associated with the storm water design, including but not limited to the discharge of storm water to tributaries outside the limits of the base.

2.16.3.2 Airfield Drainage

Aircraft parking apron shall have an interior system of inlets and storm water drains. The apron cross-section shall be designed such to minimize the amount of storm water draining through aircraft parking locations.

a) The storm water facilities for an apron that will experience fueling operations shall be designed and constructed in conformance with NFPA Standard 415. Storm sewers shall not have bituminous coatings and sewer joints shall be sealed with fuel resistant, water-tight neoprene or rubber sealants. The storm drain for a fueling apron shall be separate from airfield drainage and convey the flow through a fuel spill containment facility.

b) Aprons shall have a system of interior inlets. Provide trench drains and holding tank with float valve to capture 15 minute runoff from the Design Storm.

c) Aprons shall be sloped such that the maximum depth of ponding at an inlet shall be 225 mm before sheet flow of storm water off the apron occurs. Side slopes of swales within the infield shall follow UFC 3-260-01 criteria.

2.16.3.3 Non-Airfield Drainage

The topographic survey shall be used in designing the grading and drainage. The Contractor will provide all necessary site grading to ensure adequate drainage so that no utilities or manholes, facilities or pavements will be flooded due to a design rainfall. Drainage of the area should be compatible with the existing terrain.

2.17 Utilities.

There may be existing electric, communications and other utility lines on, around and under the project sites. It is the Contractor's responsibility to confirm the specific locations of the existing utilities and to design adjust or protect utility services in the project sites. Coordination of all site work on the project, including utility work, is the responsibility of the Contractor. Follow requirements of part 2.7 "Demolition and Removal", this section when adjusting utilities.

2.17.1 Water Distribution

Fire water distribution and fire hydrants in the project site shall be in compliance with UFC 3-230-10A Water Supply: Water Distribution.
Fire hydrant placement and number shall be in compliance with ETL 02 15 and UFC 3 600 01. See paragraph 8.0 below for further specification of fire protection components.

2.17.2 Sanitary Sewer Collection - Not Applicable

2.17.3 Electrical Distribution

The Contractor shall provide prime power diesel generators and electrical distribution to service the facilities placed within this project. See paragraph 9 below and associated drawings for more details. Proposed above

ground utility structures shall conform to airfield wing tip and imaginary surface clearance requirements of UFC 3-260-01.

2.18 Utility Trenches & Conduits.

Electric and communications line depth, bedding, and cover shall be designed as required by the UFC design criteria for line size, material, and vehicular loading. Utilities placed in traffic areas shall be designed for the greater of an AASHTO H20 vehicle loading or the wheel loading imposed by the design aircraft. Locater's tape shall be placed above the utility and 300mm below finished grade. Trench backfill shall be compacted to at least 95% maximum density.

Any adjustment to communication utilities shall be replaced with a minimum of four (4) concrete encased 110mm PVC. The conduits shall be in a 2x2 configuration with 52mm of space between the conduits and 100 mm concrete around the duct bank. The conduits shall be DB 60, DB 120 or Schedule 40. The minimum cover over the top of the concrete shall be 762mm. Cap empty conduit. Place conduit at other proposed pavement intersections on this site to provide crossing points for future communications wiring at the site. Extend conduit 1 meter beyond compacted subgrade toe on either side of road crossings.

All utility borings under existing airfield pavements shall be accomplished by dry boring, auguring or jacking following Contractor's submitted specifications, and under guidance from Air Force Technical Letter (TL) 04-4-1. All other excavations shall be accomplished by methods approved by the Contracting Officer.

3. ARCHITECTURAL

3.1 General Architectural Design Requirements

This package includes the design and construction of two (2) new Aircraft Parking Shelters, A Fire Protection Equipment Building (including a Fire Pump Room, Fire Pump Control Room, Foam Equipment Room, Electrical Equipment Room, and Communications Equipment Room), an Airfield Lighting Enclosure (ALE), and a Generator Sunshade. The Fire Protection Equipment building shall be a single structure serving both Aircraft Parking Shelters. These facilities shall be constructed as part of the SOF Helicopter Apron in Herat, Afghanistan.

3.1.1 Design Objectives and Considerations

Design and construction shall comply with the requirements contained herein. The Aircraft Parking Shelters and associated structures shall be designed for a life expectancy of not less than 20 years. This document establishes minimum standards for design and construction quality. A concept floor plan, sections and elevations of the Aircraft Parking Shelter present a suggested layout. The Contractor shall design the shelter, Fire Protection Equipment Building and sunshade as specified in the RFP. The size of the shelter is approximated, appropriate final sizes and relationships shall be determined by the Contractor based on functional requirements. The size and layout of the Fire Protection Equipment Building shall be determined by the contractor based on equipment types and functional requirements. The size of the Generator Sunshade shall be determined by the contractor based on the size and layout of the equipment being covered with a minimum 1 meter overhang beyond furthest piece of equipment on all sides and minimum overhead clearance as needed to properly access and maintain the equipment.

3.1.1.1 Orientation

Orientation of the buildings shall be coordinated with the civil engineer to ensure that placement of building features such as primary entrances and service entrances are logically considered with respect to adjacent site characteristics such as pedestrian circulation routes, roads, parking areas and other buildings. Future expansion shall be taken into consideration when designing the facility and siting it. Primary building entrances shall be architecturally defined and clearly discernable and shall be oriented in such a way as to ensure that they do not face installation perimeters or other uncontrolled vantage points with direct lines of sight to the entrance. If this cannot be done, other means shall be provided to block the lines of site.

3.1.1.2 Exterior Appearance

The buildings shall be designed to provide structures appropriate to the prescribed purpose of the installation. Buildings shall be designed to enhance or compliment the visual environment of the installation. Exterior finishes and colors shall be compatible with those of existing adjacent buildings of similar construction. Chillers and other mechanical or electrical equipment located outside of the building shall be shielded from view.

3.1.1.3 Corrosion

Exposed metals must be carefully selected and appropriately protected against corrosion. The project site may have corrosive soils, constant winds and limited rainfall resulting in windblown chloride containing dust which can lodge in joints, welds and result in condensation on metal surfaces.

3.1.1.4 Life Safety and Force Protection

The designer shall perform a life safety analysis including a narrative supporting a floor plan addressing building occupancy classification, construction type, egress capacity and travel distance, allowable area and fire suppression. Classification and Occupancy shall be as defined in the International Building Code (2009) and comply with the requirements of UFC 4-010-01, DOD Minimum Antiterrorism Standards.

3.1.1.5 Anti-Terrorism and Force Protection

Force Protection and Anti-Terrorism measures are included in this project.

3.2 Applicable Publications

- Corps of Engineers Technical Instructions, TI 800-01
- International Building Code (IBC) 2009
- National Fire Protection Association, NFPA 101 Life Safety Code, 2009
- Mid East District (MED) Design Instructions Manual
- UFC 1-200-01 General Building Requirements (2010)
- UFC 3-190-06 Protective Coatings and Paints (2004)
- UFC 3-260-01 Airfield and Heliport Planning and Design
- UFC 3-600-01 Fire Protection Engineering for Facilities, 2009
- UFC 4-010-01 DOD Minimum Antiterrorism Standards for Buildings, 2002
- UFC 4-191-10N Design: Aviation Operations and Support Facilities (2004)
- UFC 4-211-01N Aircraft Maintenance Hangars: Type I, Type II and Type II with Change 3

3.3 Buildings

Building construction systems shall be based on conventional building construction methods that can be erected on site within a limited period of time such as pre-engineered building systems.

3.3.1 Aircraft Parking Shelters

Each Aircraft Parking Shelter is approximately 1,100 SM and shall be a single story pre-engineered fabric structure with an appropriately sized aircraft access door at one end and personnel access doors distributed as required with a minimum of 1 door placed at each corner of the building. The height, width and depth of the shelter shall be designed to house a single CH-47 Chinook helicopter with appropriate surrounding space to allow for field maintenance. Note the shelters will also be used to house and maintain C-12 fixed wing aircraft.

The structure supplier shall be a reputable manufacture with a minimum of ten years direct experience in the design, manufacture and installation of structures of the type specified herein and shall operate according to a comprehensive quality system and shall provide documentary evidence as follows: 1. Provide three references with structures in use for at least five years which exceed 30.48 m (100 ft.) clear span and which enclose in excess of 929 square meters (10,000 square feet). 2. Provide information of company experience, engineering and installation which meet the above indicated experience requirements.

The structure and cladding membrane fabric shall be designed to provide a minimum 20 year operational use period. All main components of the structure shall be galvanized to ASTM G-90 or equal. Welded steel work shall be hot dip galvanized to ASTE A123 after manufacture to provide corrosion protection. Painting of steel components shall only be utilized if necessary for field repairs and shall not be employed as a factory finish. If field repairs are necessary a zinc rich field coat shall be used. The structure shall be clad with PVC coated polyester fabric manufactured by an approved and reputable supplier with demonstrated long term performance. Laminated materials are not acceptable for use on outer weather membrane. The PVC coated membrane fabric shall be waterproof and free from defects. All roofs end walls and connecting sections shall be weather tight. The color of the material shall be selected from the manufacturer's standard color chart. The material must be UV stabilized and flame retardant must carry a minimum five year manufacturer's warranty and have a life expectancy of 20 years. The structure shall accept penetrations through the membrane for access doors and mechanical services with minimal modification. The structural membrane shall not be designed to function as a structural member such that, should any damage to or penetrations of the membrane occur, the integrity of the structural framework would be affected.

Dimensions of the largest helicopter CH-47

Clear length (outside edge of rotor): 30.1 meters
Clear width (outside of rotor): 18.3 meters
Clear height: 5.791 meters

The Fire Protection Equipment Building is a single story structure sized and of appropriate construction for the site equipment housed and consisting of the following: a Fire Pump Room housing the fire pumps and related equipment for both shelters, a Fire Pump Control Room accessed directly from the Fire Pump Room, a Foam Equipment Room housing the foam fire supression equipment

for both shelters, an Electric Equipment Room housing the electrical panels and equipment for both shelters, and a Communications Equipment Room housing the communications equipment for both shelters.

The Generator Sunshade shall be a structure, open on all sides with a pitched roof of construction and size as determined by the contractor to be appropriate to the site and the equipment being covered. The sunshade shall extend a minium 1 meter beyond the furthest piece of equipment on all sites.

3.3.2 Building Construction Requirements

The following requirements establish the design parameters for the facilities. There shall be no deviations from these requirements without the prior approval of the Contracting Officer. Any items or methods required but not specifically mentioned herein shall be subject to approval by the Contracting Officer.

3.3.2.1 Exterior Walls

On Aircraft Parking Shelters provide the manufacturer's standard polyethylene or vinyl cover fabric stretched over structure meeting the following minimum standards:

Weight	407 g/sm	
Grab Strength	Warp - 1600 N	Weft - 1500 N
Tensile Strength (N/5cm)	Warp - 2300	Weft - 2100 N
Low Temperature Bend	-40 deg. C	
Fire Performance	ASTM E-84 (class 1) and NFPA 701	

The walls of the Fire Protection Equipment Enclosure and electrical panel room shall be insulated (minimum R-10) and of appropriate materials and construction as determined by the contractor to be appropriate for the site and equipment housed. Metal panel walls shall be factory formed and finished.

The Generator Sunshade shall have no walls. It shall have supporting structure and bracing coordinated with the covered equipment to allow easy access for maintenance and repair.

3.3.2.2 Floor Systems

Floors shall be sealed cast-in place concrete slabs on grade. The concrete slab in the Aircraft Parking Shelter shall be sloped to contain spills.

3.3.2.3 Ceiling Systems

All areas shall have exposed structure and/or insulation backing. All untreated exposed ferrous metal surfaces shall be painted.

3.3.2.4 Roof Systems

The roof for the Aircraft Parking Shelter shall consist of the manufacturer's standard polyethylene or vinyl cover fabric stretched over the structure and held down at regular intervals as required to resist wind and precipitation with flashing as required to ensure that water is drained away from footings and slabs.

The Fire Protection Equipment Building roof shall be roll formed factory finished metal panels having a minimum slope of 1:10 and insulated to a

minimum R-value of 10 and shall have gutters, downspouts and splash blocks located and designed to direct water away from footings and floor slabs.

The roof for the Generator Sunshade shall be roll formed factory finashed metal panels having minimum slope of 1:10 and shall have gutters, downspouts and splash blocks located and designed to direct water away from footings and floor slabs.

The roof for the Airfield Lighting Shelter shall be roll formed factory finished metal panels having minimum slope of 1:10 and shall have gutters, downspouts and splash blocks located and designed to direct water away from footings and floor slabs.

The roof for the Generator Sunshade shall be roll formed, factory finished metal panels having a minimum slope of 1:10. Factory finish on panels shall consist of a minimum 1 mil thick baked-on fluoropolymer enamel top coat of a color selected from the manufacturer's standard product line. Roof to have gutters, downspouts and splash blocks located and designed to direct water away from footings and floor slabs.

3.3.2.5 Windows

No windows are required for this project.

3.3.2.6 Exterior Doors

Exterior doors shall be 16 gauge steel with hollow metal core. Exterior door frames shall be 16 gauge hollow core metal. Standard single doors shall be 900mm x 2050mm. Doors and frames shall be primed and painted as approved by the Contracting Officer. Exterior doors shall swing outwards. Doors servicing the Fire Protection Equipment Building shall be large enough to allow the installation and removal of complete components without the need for dismantling. Frame anchors shall be no more than 50mm apart and no more than 75mm from corners. Doors servicing conditioned spaces shall have insulated cores.

3.3.2.7 Interior Doors

There are no interior doors required for this project.

3.3.2.8 Aircraft Doors

Aircraft Parking Shelter door work shall include the design, fabrication and installation of a complete usable door which is air and water tight when closed. Aircraft doors shall be overhead collapsing or sliding fabric construction sized to accommodate the largest aircraft identified in this report. Doors shall not require a ground track.

3.3.2.9 Door Hardware

Each personnel door must have the following commercial quality hardware as a minimum. One and a half pairs of metal butt hinges, one heavy duty door closer, weather stripping, a bored or mortise lockset, a six pin cylinder. All locksets shall be keyed to one master key system. All hardware shall be heavy duty and installed per the manufacturer's recommendations. Provide all hardware to meet the requirements of NFPA 80 for fire doors and NFPA 101 for exit doors.

Aircraft Door shall be motorized with a manual override system. Aircraft door

hardware shall include: heavy duty zinc coated steel guides, door conduits, electric winch, manual winch backup with brake, pulleys with sealed bearings, cables, weather seals and interior locking mechanism. All hardware shall be made of corrosion resistant materials or specifically coated to resist corrosion. All hardware shall be specifically designed for this application.

3.3.2.10 Finishes

All painted surfaces to receive washable semi-gloss paint. Paints shall not contain over 0.06 percent of lead content by weight of nonvolatile content nor shall they contain any other hazardous material, or asbestos.

3.3.2.11 Joint Sealants

Joint sealants shall be complete systems to include sealant, bond breakers, backstops and primers as necessary. Single component sealants are preferred.

3.3.2.12 Signage

This project includes no signage.

3.3.2.13 Static Grounding

Static ground points shall be provided in accordance with UFC 3-260-01.

3.4 Airfield Lighting Enclosure (ALE)

The Contractor shall design and construct the following facility as described in this document.

3.4.1 Airfield Lighting Enclosure

Design and construct a pre-engineered metal building sized to accomodate the strategic and helicopter apron and taxiway lighting equipment. This building shall have one (1) exterior door for access to the space at one end of the enclosure. The following functions/activities shall be provided within the facility; electrical equipment enclosure. Exterior of the building shall be factory finished metal panels. The roof shall be factory finished metal panels with 1 in 10 slope. Interior floor finishes shall be exposed concrete floors. All color selections shall be submitted to the Contracting Officer for review. The Contractor shall have the option to pre-fabricate the building off-site and deliver to the site.

3.4.2 Lifesafety/ Fire Protection/ Handicapped Accessibility

All facilities shall be designed in accordance with recognized industry standards for lifesafety and building egress. In keeping with the intended function of these facilities, handicapped accessibility requirements will not be incorporated into individual building design. It is assumed that the facilities in the Base Operations Complex will be used by able-bodied personnel.

3.4.3 APPLICABLE PUBLICATIONS

Mil Handbook 1008-C: Fire Protection

Corps of Engineers Technical Instructions

3.5 INTERIOR DESIGN

Colors shall be selected from the standard colors of the major manufacturer's of the product. Colors shall be appropriate for minimizing maintenance and resisting wear and damage.

4. STRUCTURAL

4.1 Design

Design shall be performed and signed by a structural engineer with a minimum of seven-years experience performing structural design. The publications listed below form a part of this specification to the extent referenced. Other international standards that comply with these standards may be used upon approval by the Contracting Officer. The publications are referred to within the text by the basic designation only.

All required documents, including drawings, specifications, and design analysis, shall be prepared in accordance with Section 01 33 00.12 10 Submittal Procedures for Design Build Projects. Specific submittal requirements in these sections supplement the requirements of Section 01 33 00.12 10.

The design analysis shall include detailed calculations and any additional information required, and the information listed below, when applicable.

All structures and all parts of the structures shall be designed and constructed to support safely all loads without exceeding the allowable stress for the materials of construction in the structural members and connections.

4.2 References

American Society of Civil Engineers, Minimum Design Loads for Buildings and Other Structures, ASCE 7-2005
American Concrete Institute, Building Code Requirements for Structural Concrete, ACI-318-2008
International Building Code, IBC-2009
Unified Facilities Criteria, UFC 3-301-01 - Structural Engineering, 27 January 2010.
American Society for Testing and Materials (ASTM) Publication, Deformed and Plain Billet-Steel Bars for Concrete Reinforcement, ASTM A 615-2007
ASTM Publication, Steel Welded Wire Fabric, Plain for Concrete Reinforcement ASTM A 185-2007
ASTM Publication, Potential Alkali Reactivity of Aggregates (Mortar-Bar Method), ASTM C 1260-2007.
American Institute of Steel Construction, Steel Construction Manual, AISC - 13th Edition; AISC 325-05
Steel Joist Institute (SJI), Standard Specifications and Load Tables for Steel Joists and Joist Girders, 42nd Edition Catalog
Steel Deck Institute (SDI), Design Manual for Composite Decks, Form Decks and Roof Decks-N0. 31, November 2007
American Iron and Steel Institute, Specifications for Design of Cold-Formed Steel Structural Members AISI - 2001 with latest supplements.
Structural Welding Code-Steel by the American Welding Society, AWS D1.1-04 and D1.4
Building Code requirements for Masonry Structures, ACI 530 2008/ASCE 5 2008/TMS 402 2008.
Metal Building Manufacturers Association. MBMA Metal Building System Manual - 2006

Unified Facilities Criteria (UFC) 3-260-02 Pavement Design for Airfields, 30 June 2001.

4.3 Dead and Live Loads

Dead and Live loads used for design shall be in accordance with the International Building Code IBC-2009. Structural elements of reinforced concrete shall be designed for all the applicable design loads using the load combinations as defined by the ACI-318-2008; and structural elements of other materials shall be designed for all the applicable design loads using the load combinations as defined by the IBC-2009. Shelter floor slabs subjected to aircraft traffic shall be designed as airfield pavement in accordance with UFC 3-260-02.

4.4 Snow Loads

Roof snow load: 98 kg/m 2 (20 psf) with Occupancy Category II and shall be designed in accordance with IBC.

4.5 Wind Loads

Wind loads shall be calculated in accordance with IBC-2009 design standards using a "3-second gust" wind speed of 145 km/hr (90 mph).

4.6 Seismic

The structure and all parts thereof shall be designed for the seismic requirements as defined by the International Building Code, IBC 2009. For Herat, Afghanistan use Spectral Response Ss=0.62g and S1=0.24g in accordance with UFC 3-301-01, with occupancy category II, and Importance Factor= 1.00. Site soil classification will be determined by Geotechnical investigations at site.

4.7 Concrete (not including pavement concrete)

Concrete shall be composed of cementations material, water, fine and coarse aggregates, and admixtures and shall be in accordance with the provisions of the ACI 318. Concrete shall have cylinder compressive strength of 28 MPa (4,000psi) flexural strength of 4.1 MPa (60psi) minimum at 28 days shall be used for design and construction of all structural concrete. Concrete shall be comprised of ASTM C 150, Type I or Type V cement. Admixtures shall consist of air entraining admixture and shall contain a high-range of water-reducer, HRWRA, in accordance with ASTM C-494, Type "F" or Type "G". The dosage of the HRWRA shall be determined during mixture proportioning study. The cementitious material shall consist of Portland cement with a 7.0 to 9.0 percent by mass replacement of cement by silica fume. Silica fume shall comply with the requirements of ASTM C1240. The cementitious material content shall not be less that 390 kg/cubic meter. The mixture shall also have a maximum water-cementitious material ratio of 0.45. Concrete shall have a maximum water-soluble chloride ion content for corrosion protection of 0.15 percent by mass of the portland cement. Hot weather requirements shall comply with the recommendations of ACI 305R-1999. Concrete shall not be placed in cold weather when ambient temperature is less than 5 degrees C or when concrete temperature is less than 10 degrees C. Heating of the mixing water or the aggregates will be required to regulate the concrete placing temperature in cold weather.

Protective measures shall be taken if freezing temperatures are anticipated before the expiration of the specified curing period. All concrete shall be

cured for a minimum of 7 days. For aggregates alkali-silica reactivity requirement, see Section 32 13 11 Part 2.2.1.2, Alkali-Silica Reactivity. Concrete members at or below grade shall have a minimum concrete cover over reinforcement of 75 millimeters. Reinforcing steel shall be deformed bars conforming to ASTM A 615/615M, grade 60, and welded wire fabric shall conform to ASTM A 185.

See Part 2 Civil and Site Development and Section 32 13 11 for requirement on pavement concrete. Aircraft shelter floor slab shall conform to Section 32 13 11.

4.8 Structural Steel

Structural steel shall be designed and constructed in accordance with the provisions of AISC 13h Edition and design of cold-formed steel structural members shall be in accordance with the provisions of American Iron and Steel Institute, Specifications for Design of Cold-Formed Steel Structural Members-2001 with latest supplements. Structural Steel for fabric shelters shall be galvanized.

4.9 Masonry

Masonry shall be designed and constructed in accordance with the provisions of ACI 530 2008/ASCE 5 2008/TMS 402 2008. Concrete masonry units shall conform to ASTM C90, Type I (Normal weight, moisture controlled). Mortar shall be Type S and conform to ASTM C 270. Grout shall conform to ASTM C476. Joint reinforcement shall be ladder type. Masonry shall not be used below grade.

4.10 Pre-Engineered Metal Building System.

Metal building systems shall comply with the requirements of the MBMA Metal Building Systems Manual-2006.

4.11 Frame Supported Fabric Shelters

The frame supported fabric shelters shall be fabricated by a manufacturer experienced in the design and fabrication of these types of structures with similar or larger dimensions. See Architectural section for requirements on fabric and fire performance.

4.12 Metal Deck

Deck units shall conform to SDI Pub. No. 31. Panels of maximum possible lengths shall be used to minimize end laps. Deck units shall be fabricated in lengths to span 3 or more supports with flush, telescoped or nested 50 mm 2 inch laps at ends, and interlocking, or nested side laps. Metal deck units shall be fabricated of steel thickness required by the design and shall be galvanized.

4.13 Open Web Steel Joist

Open web steel joists shall conform to SJI Specifications, 42nd Edition Catalog and Tables, for K- Series. Joists shall be designed to support the loads given in the standard load tables of SJI Specifications and Tables.

4.14 Steel Truss

Roof trusses shall be designed using structural shapes which conform to AISC

Specifications. Trusses shall be designed to support all the applicable loads; including but not limited to dead, live, wind uplift, collateral and crane loadings.

4.15 Force Protection.

Force protection shall comply with the requirements of CENTCOM AT/FP and DoD Minimum Antiterrorism Standards for Buildings; and UFC 4-010-01.

4.16 Foundations
Foundations shall be designed in accordance with the Geotechnical requirements of the site and manufacturer's recommendations.

5. GEOTECHNICAL INVESTIGATION AND REPORT

5.1 Site Specific Information

Site specific geotechnical information necessary to design and construct the foundations, pavements and other geotechnical related items contained in this project shall be the Contractor's responsibility. The Contractor shall determine all necessary geotechnical conditions by appropriate field and laboratory investigations and supporting calculations. However, as a minimum for structures, the contractor shall advance three (3) borings within the building footprint of any major structure and three (3) test pits within the building footprint of any minor structure. The depths of these explorations shall be sufficient to determine the subsurface conditions within the influence of the structures foundation system. For purposes of this paragraph, a major structure is any structure that meets any of the following criterion: a) reinforced concrete framed structures with a building footprint in excess of 1,000 sq.m., b) steel framed structures with a building footprint in excess of 3,000 sq.m., c) a structure that has a height equal to or greater than one and half stories, d) steel or concrete tanks in excess of 350 cubic meters. A minor structure is any structure that does not meet any of the four major structure criteria above. If rock is encountered in a structure boring, core a minimum of three (3) meters and then terminate. All explorations shall be backfilled with soil/rock cuttings to grade upon completion of field work.

As a minimum for the roadways, the contractor shall excavate two (2) test pits for every 100 linear meters of pavement having a minimum depth of three (3) meters below finished grade. For the airfield pavements, the recommended maximum spacing of borings shall meet the following requirements:

-Runway and taxiways < 61 meters (200 ft) wide, one boring every 61 to 152 meters (200 to 500 feet) longitudinally on alternating side of pavement centerline and having a minimum depth of three (3) meters below finished graded in cut sections, three (3) meters into natural subgrade for fill sections, or to rock, whichever is shallower.

-Runways > 61 meters (200 feet) wide, two borings every 61 to 152 meters (200 to 500 feet) longitudinally on alternating sides of pavement centerline and having a minimum depth of three (3) meters below finished graded in cut sections, three (3) meters into natural subgrade for fill sections, or to rock, whichever is shallower.

-Parking aprons and pads, one boring per 2,325-square-meter (25,000-square-foot) area having a minimum depth of three (3) meters below finished graded in cut sections, three (3) meters into natural subgrade for fill sections, or to rock, whichever is shallower.

Standard Penetration Tests (SPT) shall be performed in general accordance with ASTM D 1586, with the maximum sampling interval of one (1) meter to the bottom of the hole. All soil materials shall be field logged by geotechnical engineer or engineering geologist in accordance with ASTM D 2488 and final construction-document logs shall be prepared with applicable soil laboratory testing results in accordance with ASTM D 2487. The exploration and laboratory testing plan shall be approved by the Contracting Officer, prior to performance of field work., with a minimum of xx borings in the apron and 6 in the taxiways.

5.2 Geotechnical Report

The Contractor shall produce a detailed geotechnical report containing the field exploration and testing results, laboratory testing results, evaluations, recommendations, calculations and descriptive supporting text. Information in the report shall include, but not be limited to: existing geotechnical (e.g., surface and subsurface) conditions, location of subsurface exploration logs, exploration point, foundations selected, bearing capacity, pavement design criteria (e.g., CBR values, K Values), ground water levels, and construction materials (e.g., concrete cement, asphalt and aggregates). Five (5) hard copies and two (2) soft copies (PDF Format) copies of the detailed geotechnical report shall be submitted to the Contracting Officer.

5.3 Geotechnical Qualifications

All geotechnical engineering design parameters shall be developed by a geotechnical engineer or geotechnical firm responsible to the Contractor. The geotechnical engineer or geotechnical firm shall be qualified by: education in geotechnical engineering; professional registration; a minimum of ten (10) years of experience in geotechnical engineering design.

5.4 Design Certification

The contractor shall certify in writing that the design of the project has been developed consistent with the site-specific geotechnical conditions. The certification shall be stamped by the geotechnical engineer or geotechnical firm and shall be submitted with the final design.

6. MECHANICAL

6.1 General

The Contractor shall design, supply, fabricate and install new heating, ventilation and air conditioning (HVAC) systems and special mechanical systems in the facilities identified in the scope of work.
The contractor shall be responsible for the complete design and construction of all HVAC and special mechanical systems required in the Strategic Airlift Apron & Helicopter Apron complex as part of this contract. The work also includes the delivery to site, erection, setting to work, adjusting, testing and balancing, and handing over in full operating conditions all of the HVAC equipment and associated mechanical works.

6.1.1 Sub-Contractors Qualifications

The HVAC works shall be executed by a specialist sub-contractor experienced in the design and construction of these types of systems.

6.1.2 Standard Products

All materials and equipment shall be standard product of a manufacturer regularly engaged in the manufacture of the product and shall duplicate items that have been in satisfactory use for at least two (2) years prior to bid opening.

6.1.3 Local Standards

Where conflicts arise between these criteria and local standards the more stringent shall apply. In such instances, the Contractor shall furnish all available information with justification at the Contracting Officer's request.

6.2 CODES, STANDARDS AND REGULATIONS

The design and installation of equipment, materials and works covered under the mechanical heating, ventilation and air-conditioning services shall conform to the following standards, codes and regulations as applicable except where otherwise indicated under particular clause. The publications to be taken into consideration shall be those of the most recent editions. Standards other than those mentioned above may be accepted provided that the standards chosen are internationally recognized and meet the minimum requirements of the specified standards. The Contractor shall submit proof of equivalency to the Contracting Officer for approval.

A & E SERVICES MANUAL

AABC - Associated Air Balance Council (National Standards for Total System Balance)
ACGIH - American Conference of Governmental Industrial Hygienists
ARI - Air Conditioning and Refrigeration Institute
ASHRAE - American Society of Heating, Ventilation and Air Conditioning Engineers
ASME - American Society of Mechanical Engineers
ASTM - American Society for Testing and Materials
AWS - American Welding Society
International Building Code (IBC), 2006 Edition
International Mechanical Code (IMC), 2006 Edition
NFPA - National Fire Protection Association
SMACNA - Sheet Metal and Air Conditioning Contractors' National Association
UNIFIED FACILITIES CRITERIA (UFC)
- UFC 1-200-01 Design: General Building Requirements
- UFC 3-260-01 Design: Airfield and Heliport Planning
- UFC 3-400-02 Design: Engineering Weather Data
- UFC 3-410-01FA Heating, Ventilating, and Air Cond.
- UFC 3-600-01 Design: Fire Protection Engineering for Facilities
- USAF Commanders' Guide to Facility Excellence

6.2.1 Outside Design Conditions:

Summer: 39°C (102°F) db/22°C (72°F) wb
Winter: -9°C (16°F)
Longitude: 62.23E
Latitude: 34.21N
Elevation: 964m (3164 feet)

6.2.2 Inside Design Conditions:

Interior Environmental Design Conditions: (Shelters/fire pump house)

Summer: temperatures not to exceed ambient condition (ventilated)
Winter: 10.0°C (50.0°F) - (Fire protection equipment building)
20.0°C (68.0°F) - (Aircraft shelters)

Interior Environmental Design Conditions:
(Fire pump control room/foam equipment room)
Summer: 27°C (80°F) db, 50% RH Maximum
Winter: 20°C (68°F) db

Interior Environmental Design Conditions:
(Electrical equipment room)
Summer: 50°C (122°F) db
Winter: not applicable

Interior Environmental Design Conditions:
(Communications equipment room)
Summer: 24°C (75°F) db, 50% RH Maximum
Winter: 20°C (68°F) db

6.2.3 Ventilation (and air-conditioning) systems shall be designed to minimize sand and dirt infiltration into interior spaces. Outside air requirements shall be as defined in ASHRAE 62.1-2004 as a minimum and as indicated below. The outdoor air intake shall be located away from fumes including vehicle exhaust, generator exhaust, toilet exhaust, etc.

Shelters:	1.5 cfm/sq. ft.
Fire equipment area:	1.5 cfm/sq. ft.
Fire Control Pump Room and Foam room:	1.0 cfm/sq. ft.

6.2.4 Noise Levels

The sound levels for various applications for both centrifugal and propeller type fans shall be as set forth in the ASHRAE Handbooks. Noise levels generated by HVAC systems shall not exceed NC 35.

6.2.5 Smoke Detection.

Smoke detection and emergency automatic controls shall be in accordance with NFPA 90A and NFPA 72.

6.2.6 Testing and Commissioning

The contract shall include specifications and requirements for testing and commissioning of all HVAC systems and equipment including air balancing, pressure testing and temperature controls. Complete testing shall be required of all systems. Government shall witness all testing, balancing and commissioning. The Contractor shall provide reports of all tests and commissioning results.

6.3 Equipment

6.3.1 Filtration

a. To reduce sand and dirt migration, outside air intakes shall be located as high as possible within architectural constraints. The intakes shall be sized so that free air velocities are below 2.54MPS (500 FPM).

b. All outside air wall intakes shall be through weatherproof louvers with a bird screen. To reduce sand and dirt migration, outside air intakes shall be

located as high as possible within the architectural constraints (minimum of 1.5 meters above grade). Wall intakes and roof hoods shall have 50mm thick washable metal mesh type panel filters for filtration of dust.

c. Makeup air units shall have medium efficiency (30 percent, as defined by ASHRAE 52 Dust Spot Efficiency Criteria) filters, the 50 mm (2 -inch) thick disposable panel type filters.

6.3.2 Air Conditioning

6.3.2.1 Air conditioning and heating for fire pump control rooms, foam equipment room and communication rooms shall be accomplished with split-system direct expansion heat pump type refrigeration equipment. Provide multiple split-systems as required by the HVAC load. For the communication rooms provide one additional split-system for backup.

6.3.2.2 Makeup Air units: Factory fabricated makeup air units shall be of the low or medium pressure class and shall be typically the single-zone draw through or blow through type. Units include fans, heating coils, air tight insulated casings, filters, v-belt motor drives, and all appurtenances required for the specified operations. The air handling units shall be typically located adjacent to the shelters atop steel support platforms. Make-up or outdoor air shall be filtered, conditioned and supplied to the building spaces as needed to accomplish ventilation requirements.

6.3.2.3 Outdoor Equipment:
Equipment located outside will receive all necessary weather protection.

6.3.2.4 Split system heat pump air conditioners shall consist of complete packaged units consisting of a remote air cooled condensing unit and matched evaporator blower unit.

6.3.3 Refrigeration System

6.3.3.1 Direct Expansion (DX) air cooled condensing unit shall be located outdoors and mounted on a stand or slab on grade. Slab on grade equipment shall be protected from wind blown sand by 4 foot (1.2 meter) high enclosure walls. Enclosure shall provide access for equipment removal and minimum clearances as required by the manufacturer's written instructions. Each unit shall consist of weatherproof casing, compressor(s), condenser coil, condenser fans, motor, and appurtenances. Compressor shall be of the hermetic or semi-hermetic reciprocating type. Refrigeration circuit shall be connected to the refrigeration circuit of the split system air conditioning unit.

6.3.3.2 Refrigerant: All refrigerants used shall conform to the "Montreal Protocol on Substances That Delete the Ozone Layer" September 1987, sponsored by the United Nations Environmental Program and shall have Ozone Depletion Allowance (ODA) if 0.05 or less.

6.3.4 Heating

Heating for the shelters shall be provided through electric resistance coils located either within the makeup air unit or in the duct just down stream of the makeup air unit. Heat shall be provided to maintain indoor design condition. Heating units shall be located so as not to interfere with maintenance operations. All other areas shall be provided heating through the use of electric unit heaters located within the heated space.

6.3.5 Ventilation and Exhaust Systems

All fans shall be used for building ventilation and pressurization with capacities to be selected for minimum noise level generation. Unit mounted fans either used for supply or exhaust shall be centrifugal forward curved, backward inclined, or airfoil fans with no overloading characteristics of high efficiency and quiet running design. The fans shall be of the heavy duty type with durable construction and proved performance in a desert environment. Each exhaust fan shall be provided with shut-off dampers which close automatically when the fan is not running. Also, each fan shall be complete with vibration isolator, internal lubricators, and all accessories and sound attenuators as necessary.

6.3.6 Ductwork.

Air shall be distributed from central makeup air units as necessary to achieve proper airflow throughout the facility by means of air distribution ductwork. Air distribution system shall be comprised of ductwork, fittings, grilles, registers, and/or diffusers. Ductwork shall be constructed of galvanized steel or aluminum sheets and installed as per SMACNA "HVAC Duct Construction Standards (Metal and Flexible)." Duct insulation shall be provided for all supply ductwork and for return ductwork not located within a conditioned area. All metals which are exposed to the air stream within the duct shall be of non-sparking types.

6.3.7 Duct Insulation.

Ducts exposed to weather shall be insulated with a minimum of 100mm insulation. The outside of the insulation shall be covered with a vapor barrier and then covered with an aluminum protective jacket. There shall be no breaks in vapor barrier.

6.3.8 Diffusers, registers and grilles shall be factory fabricated of steel or aluminum and distribute the specified air quantity evenly over the space intended. The devices shall be round, half round, square, rectangular, linear, or with perforated face as determined by the design. Units will be mounted in ceilings, high sidewalls, or directly to ductwork and shall be sized for the airflow to be delivered with a maximum NC rating of 35. Pressure loss through the diffuser shall be considered in sizing the duct system and the system static pressure calculations.

6.3.9 Wall Penetrations

Building wall and roof penetrations, along with fabric shelter penetrations shall be carefully made so as not to deteriorate the structural integrity of the wall system. The contractor shall consult with a structural engineer or manufacturer representative. The recommendations of the engineer/manufacturer shall be strictly adhered to. Wall and roof penetrations shall be weather tight.

6.3.10 Control Wiring and Protection Devices
Control wiring and protection devices shall be the manufacturer's standard, pre-wired, and installed at the factory. Operation of the control system shall be manufacturer's standard configured for 24V operation.

6.3.11 Thermostats

All thermostats shall be located near the return grills and mounted 1.5 meters above the floor and shall be easily accessible. In lieu of a thermostat, a temperature sensor may be located in the room location and

connected to the control thermostat near the unit. Thermostats located inside occupied areas shall be provided with lockable covers.

6.3.12 Electric Requirements for HVAC Equipment

a. Note that all electrical requirements for all HVAC systems shall be designed and installed to operate on 400/230 volt, 3-phase, 50-cycle power. Verify electrical requirements with Contracting Officer.

b. Electric Motors: All HVAC motors shall be Totally Enclosed Fan Cooled (TEFC) type and rated for minimum 45 C ambient.

c. All thermostats shall be wall mounted. Thermostat shall be mounted 1.5 meters above the finished floor and be easily accessible. Operation of the control system shall be the manufacturer's standard voltage for the unit.

d. The following are the minimum requirements for motors regarding enclosure, insulation and protection.

1. Compressor Hermetic: Provide inherent (internal) overload protection.
2. Condenser: Provide internal thermal overload protection.
3. Evaporator: Open Class "A" fan motor type providing internal thermal overload protection.

6.3.13 Electric Motors

a. Motors shall be of sufficient size without operating in the service factor for the duty to be performed and will not exceed their full rated load when the driven equipment is operating at specified capacity under the most severe conditions likely to be encountered.

b. All motors exposed to 40.5 ° C temperature or greater shall be of the totally enclosed fan cooled (TEFC) type continuous duty classifications based upon 50 ° C ambient temperature of reference.

6.3.14 High Ambient Rating

All HVAC equipment located outdoors shall be selected to provide required capacity and for operation in an ambient temperature of 46.1° C (115° F); the equipment safety trip shall allow equipment to operate at higher ambient though at reduced capacity.

6.4 TESTING AND COMMISSIONING

6.4.1 General.

The Contractor shall demonstrate that the installed systems are adjusted and operate correctly to fully satisfy the function for which these systems have been designed. The Contractor shall test, adjust, balance and regulate the system and its controls as necessary until the required design conditions are met. All testing, adjusting, balancing and commissioning shall be performed by an independent subcontractor certified by NEBB, AABC or SMACNA. The Contractor shall include tests for interlocks, safety cutouts and other protective devices to demonstrate safe operation. All such tests shall be carried out in the presence of the Contracting Officer or its representative and full written records of the test data and final settings shall be submitted to the Contracting Officer.

6.4.2 The following tests data shall be submitted in a tabulated form:

a. Date and time of the test.

b. Outdoor DB and WB temperature.

c. Indoor Room Conditions: DB and WB temperatures and supply return and exhaust airflow.

d. Makeup Air Units: Air quantities shall be measured by anemometer. Following readings shall be recorded:

(1) Supply air CMH (CFM) supplied by each system.
(2) Total CMH (CFM) exhausted by each fan.
(3) Motor speed, fan speed.
(4) Input amperes and power input (KW) for each fan.

e. Ventilation and exhaust equipment: Air quantities shall be obtained by anemometer readings and all necessary adjustments shall be made to obtain the specified quantities of air indicated at each inlet and outlet. Following readings shall be made:

(1) Outside air CMH (CFM) supplied by ventilation system
(2) Total CMH (CFM) exhausted by each exhaust fan
(3) Motor speed, fan speed and input ampere reading for each fan

f. Electric Motors: For each motor:

(1) Speed in RPM

g. A continuity tester shall be used to demonstrate that the end bands of the inlet and outlet ducts when setup are satisfactorily grounded to the frame of the blower.

h. Ductless Split Unit Air Conditioners:

(1) Amperes for each phase
(2) Power input in KW

6.5 Operation and Maintenance Manuals

O & M Manual shall be submitted and shall include the following:
a. Manufacturer's technical catalogues, dimensional drawings and wiring diagrams for each and every type of equipment installed.
b. Operating instructions for various equipment and systems included in the installation work.
c. Maintenance manuals for all equipment and systems included in the installation work which need regular and specialized periodic maintenance.

6.6 Airfield Lighting Enclosure (ALE)

6.6.1 UNIFIED FACILITIES CRITERIA

UFC-3-260-01 Airfield and Heliport Planning and Design

UFC-3-410-01 Heating ventilating and Air Conditioning

The HVAC sub-contractor shall be responsible for furnishing DX split-system type AC equipment for maintaining the necessary interior temperature and humidity control for an electrical aboveground enclosure which houses

approximately eight constant current regulators/transformers furnished by the electrical sub-contractor.

The AC equipment installed shall maintain the required enclosure's temperature and humidity to ensure the electrical equipment furnished is maintained within the temperature and humidity limits of the equipment manufacturer's recommendations.

7. PLUMBING

7.1 General

The Contractor shall design and build fuel storage and distribution systems required in the facilities identified in Section 01 10 00.12 10 Scope of Work and as described herein. The contractor shall also be responsible for complete design and construction of all special plumbing systems required for full and safe operations in all facilities under this contract. The work covered in this scope also includes the delivery to site, erection, setting to work, adjusting, testing and balancing and handing over in full operating condition all of the plumbing equipment and associated plumbing works. Sub-Contractors Qualifications: The plumbing systems shall be executed by a plumbing specialist subcontractor experienced in the design and construction of these types of systems. Standard Products: All materials and equipment shall be standard product of a manufacturer regularly engaged in the manufacture of the product and shall duplicate items that have been in satisfactory use for at least two (2) years prior to bid opening. Local Standards: Conflicts between criteria and local standards shall be brought to the attention of the Contracting Officer for resolution. In such instances, the Contractor shall furnish all available information with justification to the Contracting Officer. Seismic Requirements: All plumbing equipment and piping shall be installed to meet the seismic requirements as defined by the International Building Code, IBC 2000 and seismic response coefficients in Paragraph 4 "Structural"

7.2 Codes, Standards and Regulations

Fuel storage and distribution systems shall be manufactured and installed in accordance with the publications listed below and the publications referenced therein. Where a conflict occurs among the various criteria, the more stringent requirement shall take precedence.
American national Standards Institute:

- ANSI/IEEE 142-91

American Petroleum Institute:
- API RP 540 Electrical Installations in Petroleum Processing Plants
- API 650 Welded Steel Tanks for Oil Storage

International Building Code (IBC), 2006 Edition
International Mechanical Code (IBC), 2006 Edition
International Plumbing Code (IBC), 2006 Edition
National Fire Protection Association:
- NFPA 30 Flammable and Combustible Liquid Code
- NFPA 30A Code for Motor Fuel Dispensing Facilities and Repair Garages
- NFPA 70 National Electric Code

Underwriters Laboratory, Inc.:
- UL 142 Standard for Steel Aboveground Tanks for Flammable and Combustible Liquids

Unified Facilities Criteria:
- (UFC) 3-460-01, Petroleum Fuel Facilities. 16 January 2004

7.3 Power Plant Fuel Storage/Distribution

Fuel Storage and Distribution for fuel shall be provided to support operation of the diesel engine generators. The fuel storage shall consist of aboveground horizontal steel tanks with containment dikes. These tanks shall be complete with fill tube and cap, suction tube, tank gage, vent, and other fittings and appurtenances required for full and safe operation. Refer to UL-142 for further requirements. Tanks shall be provided with support saddles, platform/stair and concrete pad. Fuel shall be transferred from the fuel storage tanks by duplex transfer pumps into individual day tanks integral with the generator unit. Fuel piping shall be painted black steel aboveground and supplied and installed in conformance with NFPA 30 Flammable and Combustible Liquid Code. Fuel storage capacity shall be based on minimum seven days with generators operating at normal capacity of the plant and two days at 100% of the generator full load rating. The fuel storage system shall be expandable to allow for increases in generator capacity. Metal fuel tank saddles should not be placed directly on fuel containment area slabs. They should be elevated on concrete piers to avoid moisture corrosion. Fuel containment area shall be sized for 110% of storage capacity and shall include a sump with a manual ball valve to allow for water removal. Provide fuel filling system for unloading fuel from fuel tanker into storage tanks comprised of truck pad(s), duplex fuel transfer pumps, piping manifold and valves. The system shall provide remote fuel level monitoring panels at the pad(s).

Provide lockable plug valve (in supply) and other accessories in fuel piping as required by the engine manufacturer.

7.4 Corrosion

Pipe subject to corrosion passing through or under corrosive fill such as cinders, concrete, or other corrosive material, shall be protected against external corrosion by protective coating, wrapping, or other means which will resist such corrosion. Piping made of inherently non-corrosive material will be used to the greatest extent possible. Dielectric unions shall be used where dissimilar metals are used in the same piping system.

7.5 Testing and Inspection

The Contractor shall test all piping systems in accordance with International Building Code. The contractor's designer shall specify that all plumbing systems shall be left uncovered and unconcealed until it has been tested and approved. The installation contractor shall furnish all equipment, materials, and labor required for testing a plumbing system. All such tests shall be carried out in the presence of the Contracting Officer. After completing the work, the Contractor shall demonstrate that all plumbing systems operate to fully satisfy the function for which these systems have been designed. The Contractor shall test, adjust, balance and regulate the system and its controls as necessary until the required design conditions are met. The Contractor shall include tests for interlocks, safety cutouts and other protective devices to demonstrate safe operation. All such tests shall be carried out in the presence of the Contraction Officer and full written records of the test data and final settings shall be submitted to the Contracting Officer.

8. FIRE PROTECTION

8.1 Fire Protection, SOF Helicoptert Apron, Herat, Afghanistan

8.1.1 General

Facility construction and fire protection systems shall be installed in accordance with the publications listed below and the publications referenced therein. Where a conflict occurs among the various criteria, the more stringent requirement shall take precedence.

Unified Facilities Criteria (UFC) 3-600-01, Fire Protection Engineering for Facilities. 14 July 2009
Engineering Technical Letters (ETL) ETL 02-15 Fire Protection Engineering Criteria - New Aircraft Facilities.
Codes and Standards of the National Fire Protection Association (NFPA) 2010 edition (Individual standards may carry earlier edition dates.).
These include, but are not limited to:
NFPA 10, Portable Fire Extinguishers, 2010 edition
NFPA 11, Standard for Low-, Medium, and High-Expansion Foam, 2010 Edition
NFPA 13, Standard for Installation of Sprinkler Systems, 2010 Edition
NFPA 20, Installation of Stationary Pumps, 2010 edition
NFPA 22, Water Tanks for Private Fire Protection, 2008 edition
NFPA 24 Private Fire Service Mains and Their Appurtenances, 2010 edition
NFPA 70, National Electrical Code, 2008 edition
NFPA 72, National Fire Alarm and Signaling Code, 2010 Edition
NFPA 101, Life Safety Code, 2009 edition
FM Global (FMG) Approval Guide, Fire Protection, 2010 edition with updates
Underwriters Laboratories (UL) Fire Protection Equipment Directory, current edition
International building Code (IBC), 2009 Edition

8.1.2 Life Safety

Facilities features shall be provided in accordance with NFPA 101 to assure protection of occupants from fire or similar emergencies.

8.1.3 Fire Protection Equipment

All fire protection equipment shall be currently listed by Underwriters Laboratories (UL) or approved by FM Global (FMG); or equivalent subject to the approval of the Contract Officer.

8.1.4 Building Construction

Building construction shall conform to the fire resistance requirements, allowable floor area, building height limitations and building separation requirements of the International Building Code (IBC), UFC-3-600-01, and ETL 02-15.

8.1.5 Building Separation

A minimum separation between tension fabric structures will be 15 meters (49.2 feet) with a clear zone between shelters. The minimum separation between tension fabric structures and other structures will be 30 meters (100 feet). The clear zone cannot be used for storage and must be clear of vegetation (maintained lawn is permitted). The clear zone may be used as a street or driveway, but not for vehicle parking.

8.1.6 Internal Fire-Rated Separation

Non-Required

8.1.7 The water distribution system shall include ductile iron underground distribution piping, sectional control valves, underground fire service piping to fire suppression and standpipe system. Installation shall comply with NFPA 24, Private Fire Service Mains.

8.1.8 Automatic fire sprinkler system is required in the helicopter shelter due to its size, construction type, and occupancy. Automatic sprinkler protection is to be provided based on the system requirements specified in ETL 02-15, for -fueled- aircraft. Additionally, automatic sprinkler protection is to be provided in the pump and foam shelter(s).

8.1.9 Low Level High Expansion Foam Sprinkler Systems

8.1.9.1 Except as modified herein, the low level high expansion foam sprinkler systems shall comply with applicable provisions of UFC 3-600-01, ETL-02-15, and NFPA 11. The HEF system will draw off inside air and be hydraulically operated. The HEF system will operate on wet pipe sprinkler system activation for the same shelter, or by manual foam release.

8.1.9.2 Sprinklers shall be quick response upright spray type with a temperature rating of 79 C (175 F). In areas where extremely high temperatures normally occur at the roof sprinklers may have a temperature rating of 93.3 C (200 F).

8.1.9.3 The fire area is limited to one (1) shelter. Each shelter will be protected by a dedicated wet-pipe sprinkler riser.

8.1.9.4 Each shelter shall have a dedicated HEF riser assembly to operate on water flow in the same shelter, or a manual release from the shelter.

8.1.9.5 One foam shelter containing the valves, foam tank, and related equipment shall serve all of the aircraft shelters.

8.1.10 Water Supply for Fire Protection

A system of water storage and distribution shall be provided to meet the maximum calculated fire demand for the duration required. The water system shall comply with UFC 3-600-01, ETL 02-15, and applicable NFPA standards. A Fire Flow of 1893 liters per minute (lpm) (500 gallons per minute (gpm)) with a minimum 1.4 bar (20 psi) residual pressure shall be provided.

8.1.10.1 Water Supply for Fire Protection

A system of water storage and distribution shall be provided to meet the maximum calculated fire demand for the duration required by the standard for the required sprinkler/suppression system. The water system shall comply with UFC 3-600-01, ETL 02-15, and applicable NFPA standards. A hose allowance of 1893 lpm (500 gpm) for Exterior Hose Demand (hydrants) shall be included in the sprinkler system hydraulic calculations. Provide jockey pump and controller. Provide both a flow meter system and a test header for the fire pumps. Flow meter discharge shall be piped back to water storage tanks. Provide surge tank and calculations for surge tank capacity. Tanks are to be monitored for low level and low temperature. Surge tanks are provided on each riser and for each pump setup with pressure gauge. Isolation valves for surge tanks are to be electronically monitored.

The water supply is dedicated to fire protection and not to be used as a potable water supply, so no backflow prevention is required. Additionally, tank is required to filled manually via water tankers, or other means as

determined suitable be the contractor and approved by the local authorities. Site utilities are limited.

The quantity of water storage is based upon the assumption that there will be only one fire at a time and only one (1) structure involved. Size water storage tanks to provide 30 minutes of flow duration as required for the sprinkler and high expansion foam systems, and 60 minutes for the exterior hose demand (hydrants). Water storage tank, shall serve the new apron hydrants. Provide 10% ullage. Tank capacity shall be the greater of 193,500 liters (51,120 gallons) each, or as required by 120% of the hydraulic calculations plus appropriate ullage.

8.1.10.2 Storage tanks in total shall contain 120% of the maximum required water demand with water distributed as equally as is practical between two fire water storage tanks. Per ETL 02-15, Section A1.4.2.3, Provide storage capacity equal to 120 percent of the maximum demand for 30 minutes. Divide the required storage capacity between two equal-sized water tanks, each storing one-half of the required volume. The piping configuration must allow water to be supplied by both reservoirs, and either of the reservoirs if the other is out of service.

8.1.10.3 The water distribution system shall be protected from frost.

8.1.10.4 The water distribution system shall include ductile iron underground distribution piping, sectional control valves, and underground fire service piping to sprinkler systems. Installation shall comply with NFPA 24, Private Fire Service Mains. Underground water distribution system supplying the wet pipe sprinkler piping is to enter the shelter per ETL 02-15, Section A1.3.1.6.4. Foam solution piping to the helicopter shelters is required to be below ground in covered tanks to allow vehicle traffic between the shelters. Covered trenches shall have solid covers and shall be designed to withstand vehicle loading equipment to MRAP or equal distributed per AASHTO HS-20 loading distribution. Trenches shall be provided with drainage sump every 3 m and shall pitch to ensure that there is no standing water in the trench at any time.

8.1.11 Fire Pumps. Fire pumps shall be horizontal split case type, installed in accordance with NFPA 20, Standard for the Installation of Centrifugal Fire Pumps. Fire pumps shall be housed in a pump house.

8.1.11.1 Fire pump drivers shall be soft start electric motor primary and secondary supplied by the generator provided as part of this project under separate section.

8.1.11.2 A minimum of two fire water pumps shall be provided.

8.1.11.3 The maximum nominal fire pump capacity rating shall be 7571 lpm (2,000 gpm). Pump nominal pressure ratings shall not exceed 8.6 bar (125 psi).

8.1.11.4 A pressure maintenance or jockey pump shall be provided to maintain pressure in the fire protection piping system as specified in NFPA 20.

8.1.11.5 Fire pumps shall be arranged for automatic starting upon pressure drop within the fire protection piping system and also start upon the manual activation of the high expansion foam system. If there is an existing base fire alarm system that allows for additional control points, one fire pump shall also start upon a manual start signal from the base fire dispatch center.

8.1.11.6 Exhaust, cooling, ventilation, and air intake configuration shall be as determined by the fire pump and fire pump driver supplier. The Foam Structure and the fire pump structure shall be a sized to accommodate all of the fire protection equipment and systems whether located in a combined structure, or separate structures, but must meet the hydraulic and foam distribution time requirements for the most remote helicopter shelter. All valves, waterflow switches, monitoring devices, and controls are to be monitored by the fire alarm panel.

8.1.12 Wet-pipe automatic sprinkler system shall be provided in the fire pump and foam/fire equipment structures.

8.1.12.1 Provide wet sprinkler risers with vane type water flow switches per

ETL 02-15.

8.1.13 Smoke Detection

Smoke detection shall be provided only in accordance with UFC 3-600-01, NFPA 72-National Fire Alarm Code, and ETL 02-15. Provide smoke detection in near fire alarm releasing panel, and other fire alarm control panels.

8.1.14 Local Fire Alarm System

A fire alarm evacuation system shall be provided as required by UFC 3-600-01, NFPA 101-Life Safety Code, and ETL 02-15 and shall be UL listed for releasing service. System shall be arranged to operate audible and visual alarm signals throughout the facility upon activation of a manual fire alarm pull station, area smoke detection where required, or suppression system. Fire alarm system shall monitor all points including (but not limited to) in the fire pump shelter and foam shelter, including all valves, flow switches, low pressure, pump monitoring, and low temperature. Manual alarm pull stations shall be located at all exit and entrance doors and as otherwise required by NFPA 72. Refer to Electrical Specification Section 9 for additional fire detection and alarm requirements.

8.1.15 Fire Alarm Reporting System.

The fire alarm system shall be a local fire alarm system and not monitored off site.

8.1.16 Fire Hydrants shall be placed at a maximum of 91 meter (300 foot) intervals around the accessible side(s) of the apron. Further, a hydrant shall be a maximum of 30 meters (100 feet) from each corner of the building.

8.1.17 Portable Fire Extinguishers

Portable fire extinguishers shall be provided inside all facilities as required in accordance with NFPA 10.

Extinguishers shall be of the multi-purpose dry chemical type except for occupancies requiring a special type of extinguisher (such as Carbon Dioxide extinguishers for electrical equipment rooms). Wheeled extinguishers employing potassium bicarbonate dry chemical are generally recommended for helicopter shelters because they provide the maximum extinguishing capability for Classes B and C type fires.

Wheeled extinguishers employing a minimum 45 kg (100 lbs) of potassium

bicarbonate dry chemical shall be supplied for aprons for the maximum extinguishing capability of Classes B and C type fires.

9. ELECTRICAL

9.1 SCOPE OF WORK

The Contractor shall design, supply all electrical materials, and construct the electrical systems necessary to support the SOF, Helicopter Apron, aircraft shelters, Airfield Lighting Enclosure and Fire Protection Equipment Enclosure at the Herat Airfield in Afghanistan. This includes but is not limited to, all consumables, trade tools, construction equipment and test equipment needed to result in a fully functional electrical system required for reliable operation of this project.

The systems shall be designed and constructed by the Contractor in accordance with the applicable codes and standards listed herein and the standards referenced in the listed specifications. The Contractor shall design, construct and procure all electrical facilities.

In the bid documents, as described and/or listed in this Contract and, good engineering practices, to deliver fully functional electrical systems required for reliable operation of this project.

In accordance with the applicable codes, standards and publications listed herein and the standards referenced in those listed documents. Refer to the Civil Site Plans for the proposed layout and details for this site. The Contractor shall provide complete electrical design services including, but not limited to:

-calculations and design analysis

-schematics and one lines

-construction drawings

-specifications for the electrical systems

The Contractor is responsible:

-for identifying and providing the electrical systems needed for a complete and operational facility to adequately support the Contract requirements,

-for providing facilities to support the expected electrical loads and functions of this project.

-for obtaining all construction permits from local and national agencies, needed to proceed with construction in a timely manner

-for the design and selection of all materials and equipment being submitted to the Contracting Officer for prior approval before any work commences.

9.1.1 Scope Items Summary

The Contractor shall design, procure and install all items as follows but not limited to:

-Demo of any existing airfield lighting and NAVAID system facilities required for new construction. -Apron and taxiway edge lighting for the SOF and

Helicopter Aprons

-Grounding system including static grounding points/ aircraft and helicopter tie-downs

-Secondary power distribution to support facilities -Obstruction lighting (if required)

-Prime power generator(s) and paralleling switchgear with sunshade

-Mechanical equipment power support

-Testing and commissioning

-Onsite training

-Airfield Lighting Enclosure (ALE)

9.2 GENERAL REQUIREMENTS

9.2.1 Applicable Standards and/or Codes
The standards and/or codes listed below form a part of this Contract to the extent referenced or applicable. The Contractor shall be bound by the latest issued code or standard in effect at the time this Contract is issued for Construction. All are referred to by basic designation only. The Contractor shall confirm and verify the standards and/or codes used, to include but not limited to:

-BS 7671 (2008) Requirements for Electrical Installations, IEE Wiring Regulations, Seventeenth Edition
-IEC 60364 (2005-11) Low-voltage electrical installations
-BS 1363-2 (Jan 1995, Amd 1) 13 A Plugs, socket-outlets & adapters
-Specifications for 13 A switched and unswitched socket-outlets
-Institute Of Electrical And Electronics Engineers (IEEE) IEEE C2 (National Electrical Safety Code (NESC), 2008
Illuminating Engineering Society of North America (IESNA)

NATIONAL FIRE PROTECTION ASSOCIATION (NFPA)

-National Fire Protection Association, NFPA 70 (National Electric Code (NEC), 2011 Edition(can use in lieu of BS 7671 if necessary)
-NFPA 70E Standard for Electrical Safety in the Workplace, 2009 Edition NFPA 72 National Fire Alarm and Signaling Code, 2010 Edition
- NFPA 77 (2000) Recommended Practice on Static Electricity
-National Fire Protection Association Life Safety Code, NFPA 101, 2009 Edition.
-National Fire Protection Association Standard for Installation of Lightning Protection systems, NFPA 780, 2011 Edition.

-FAA Section AC 150/5345-43 Obstruction Lighting Equipment

9.2.1.1 References in the specification to U.S. (American) standards (e.g. ASTM, ASME, Factory Mutual (F.M.), National Electrical Manufacturer's Association (NEMA), ANSI, IEEE, Underwriter's Laboratories (UL), etc.) for construction materials and equipment, is made to establish a level of electrical quality and standardization for this project. Material conforming to other internationally recognized standards such as British Standards (BS), and International Electrotechnical Commission (IEC) may be acceptable in lieu of compliance with U.S. material standards depending on the application, and if approved by the Contracting Officer.

9.2.2 Unified Facilities Criteria and Design Guides
Complete design of the airfield lighting system shall be in accordance with the most recent requirements of the United Facilities Criteria located here http://www.wbdg.org/ccb/browse_cat.php-o=29&c=4 and other design guides as listed below (Contractor to use the latest published version available at the time of Contract award.) In every instance where the criteria is applicable, it shall become part of this Contract document. The following guides to be used include but are not limited to:

(NOTE: Some of the following apply only if the Option is exercised)
UFC 3-260-01 Airfield and Heliport Planning and Design
UFC 3-460-01 Design Petroleum Fuel Facilities
UFC 3-520-01 Design: Interior Electrical Systems
UFC 3-530-01 Design: Interior and Exterior Lighting and Controls
UFC 3-535-01, Visual Air Navigation Facilities, 17 Nov 05

UFC 3-535-02, Design Drawings For Visual Air Navigation Facilities available upon request.

UFC 3-540-04N Diesel Electric Generating Plants
UFC 3-550-0Exterior Electrical Power Distribution
UFC 3-550-03FA Electrical Power Supply and Distribution
UFC 3-560-01 Electrical Safety, O&M
UFC 3-600-01 Design: Fire Protection Engineering for Facilities, Change 1, 14 July 2009
UFC 3-570-02N Electrical Engineering Cathodic Protection
UFC 3-570-02A Cathodic Protection

-U.S. Army Corps of Engineers, Transatlantic Programs Center, Design Instructions Manual
-ANSI/ASHRAE/IESNA Standard 90.1-2007 (Lighting)
-ARMY TM 5-811-3 (AIR FORCEA FM 88-9 CHAP. 3)
Electrical Design Lightning and Static Electricity Protection
-Air Force Engineering Technical Letter ETL 02-15 Fire Protection Criteria
-Fire Protection Engineering Criteria-New Aircraft Facilities
-ICAO (International Civil Aviation Organization) Annex 14 -STANAG 3316 (NATO Standardization Agency)

Airfield Lighting Design measurements shall be shown in metric units.

9.2.3 Guide Specifications

The Contractor shall utilize the Division 26-Electrical and 33-Utilities guide specifications and others, found on this website: http://www.wbdg.org/ccb/browse_org.php-o=70, in preparing their technical specifications.

(Note do not use -Preparing Activity: NASA- spec versions)

Guide specifications may be found on the internet at Construction Criteria Base (CCB), available to the public at the following url: www.ccb.org. The Contractor shall edit applicable guide specifications and submit a completed version showing changes and or additions, for approval as part of the submittal requirements of this Contract including but not limited to:

UFGS 34 73 13 Mooring and Grounding Points for Aircraft (included in this Contract)

UFGS 26 56 20.00 10 Airfield and Heliport Lighting and Visual Navigation Aids.

UFGS 33 70 02.00 10 Electrical Distribution System Underground

UFGS 26 32 15.00 10 Diesel-Generator Set Stationary 100-2500 KW, with Auxiliaries

UFGS 26 23 00 Switchboards and Switchgear

UFGS 26 24 16.00 40 Panelboards

If a needed specification is not available on this site the Contractor can submit a proposed spec required in order to result in a complete set of specifications for this work.

9.2.4 NOT USED

9.2.5 Electrical Site Survey

The contractor shall perform a site survey prior to design start and is responsible for obtaining all necessary information and performing all calculations, measurements, and any other data pertinent to design and construction of this project.

The Contractor shall note all existing utilities, structures and enclosures that could possibly impact the electrical design and power supply for this project and provide a report to the Contracting officer. The report shall include findings and recommendations in how to utilize electrical facilities if possible, or to integrate into the final design.

The Contractor shall coordinate design and construction under this project with any design/build contractor implementing the adjacent taxiway projects that is preceding or being built within the same time frame as this work. Review all available design drawings for the existing and new airfield lighting systems to determine where there are potential interferences and conflicts between the new construction and existing construction and utilities.

The Contractor shall perform a complete field survey to gather information for his design, and field verify any potential problems, and report and make recommendations to the Contracting Officer for proposed resolution.

Existing communications or electrical power lines, can be left in place if they are buried deep enough and do not interfere with the new construction. These cables at a minimum shall have a protective sleeve placed around them to facilitate their replacement if necessary and to provide physical protection. The requirements of UFC 3-535-01 shall be followed. If this is not possible the cables should be re-routed. Any re-routing necessary shall be reported to the Contracting Officer.

The Contractor shall review the existing airfield lighting systems. The Contractor shall field verify the existing systems that might affect the new installation, and provide a report to the Contracting Officer. The Contractor shall evaluate all existing equipment and cables to accommodate the additional systems being installed as part of this Contract. New cables and equipment will be needed for the new apron.

9.2.6 Demolition of Existing Airfield Lighting

Contractor shall demolish all existing lighting systems as required to connect the proposed aprons into existing systems in accordance with Chapter 19 of the Design Instruction Manual that require removal to accommodate the new installation. All fixtures, material and equipment removed as a result of demolition are considered Government property and shall be properly stored at a location approved by the contracting officer. No demolition shall take place prior to obtaining authorization from the Contracting Officer.

9.2.7 Site power

Depending on the recommendations of the Electrical Site Survey, the site power shall be supplied from new prime power diesel generators, having the necessary capacity to carry all the electrical load required for this project including lighting, aircraft shelter power, fire protection equipment enclosure, electric fire pump(s) and the ALE loads if that Option is exercised.

The Contractor shall design and construct electrical systems for this project utilizing 3phase 380/220 volt 50HZ or as directed by the Contracting Officer.

Single phase shall be 220V, with a neutral and ground, 50HZ. Service and distribution shall generally be 3-phase, 4-wire 380/220V utilization power for convenience receptacles and small power loads.

9.2.8 Environmental Conditions

The design and selection of materials for exterior work shall be appropriate for the site environmental conditions as described in the Contract. The Contractor shall clearly indicate any de-rating factors applied to equipment or cabling.

Required design capacities including adequate spare capacity must be met after applying applicable de-rating factors to equipment and cabling. Where multiple feeder cables are run within close proximity, apply de-rating factors according to manufacturer's guidance or other applicable published guidance when manufacturer's guidance does not fit installation condition.

9.2.9 Material

US criteria require the use of Underwriter's Laboratories (U.L.), Factory Mutual (F.M.), National Electrical Manufacturer's Association (NEMA) or other standards for electrical construction materials and equipment. Comparable internationally recognized standards such as British Standards (BS), International Electrotechnical Commission (IEC) standards, or Deutsches Institut fur Normung (DIN) standards, for example, may be acceptable in lieu of compliance with U.S. standards depending on the application and if approved by the Contracting Officer. There is no exception for Airfield lighting material except as noted herein.

-Material and equipment installed under this contract shall be for the appropriate application.

-All airfield lighting system equipment shall be certified by the ICAO (International Civil Aviation Organization) Annex 14 , STANAG 3316 (NATO Standardization Agency) or Airfield Lighting Federal Aviation Administration (FAA). All airfield lighting materials and equipment shall be manufactured to one of those standards. The Contractor shall provide proof to the Contracting officer in the form of internationally recognized certificates, verifying that the suppliers of the airfield lighting equipment and materials are

certified prior to any equipment installation. Material installed without this certification will be in violation of the Contract requirements and subject to penalties or withholding of payment for services until the problem is resolved to the Contracting officers satisfaction.

-Material and equipment shall be a standard product of an established manufacturer regularly engaged in the manufacturing business for at least 5 years and the product by that manufacturer shall essentially duplicate items that have been successfully utilized by industry and businesses for at least 2 years prior to bid opening.

-Equipment installed shall be capable of being serviced by an organization that is, in the opinion of the Contracting Officer, reasonably convenient to the site if practical and feasible.

-Materials and equipment shall be installed in accordance with recommendations of the manufacturer. Major components of equipment shall have the manufacturer's name, address, type or style, voltage and current rating, and catalog number on a non-corrosive and non-heat sensitive plate, securely attached to the equipment.

-All equipment delivered and placed in storage, prior to installation, shall be protected from the weather, humidity and temperature variation, dirt and dust, and any other contaminants.

-Equipment and materials shall be new unless indicated or specified otherwise.

-Enclosures for exterior and interior applications shall be NEMA Type 4 (IEC Classification IP54) and NEMA Type 1 (IEC Classification IP10), respectively unless noted otherwise.

9.2.10 Manholes/Handholes/Pullboxes

Contractor shall be responsible for providing handholes, manholes and/or pull boxes as required by the applicable referenced codes and publications.

All covers for all manholes/pullboxes and handholes shall be constructed:

-to meet ASTM (American Society for Testing and Materials) Specification A 48, Class 20. (9,090kg vertical load) and loading as per Section 2 -Utilities Trenches and Conduits

-in locations subject to aircraft traffic, to support not less than 34,000kg (75,000 lbs) single wheel load. The top surface of foundation should be 1 inch above grade per UFC 3-260-01 for runways (paragraph 3.9). See Air Force ETL 02- for heavy aircraft loading to determine the lateral loads on handholes/manholes. Structural calculations must be submitted for government approval prior to construction.

9.2.11 Grounding System

The Contractor shall design, construct and supply all necessary labor, equipment, and material to result in a fully functional electrical grounding system for this project. This grounding system shall comply with the requirements of BS 7671 (also reference UFC 3-535-01 and NFPA 70, National Electrical Code (NEC), Article 250).

Some but not necessarily all, grounding design criteria are as follows:

-All exposed non-current carrying metallic parts of electrical equipment in the electrical system shall be grounded/bonded.

-Insulated grounding conductor (separate from the electrical system neutral conductor) shall be installed in all feeder and branch circuit raceways per BS7671.

-Equipment grounding bars shall be provided in panelboards.

-The equipment grounding conductors shall be carried back to the service entrance grounding connection or separately derived grounding connection.

-Equipment safety grounding/bonding conductor shall be insulated green-colored per BS7671 or the NEC.

-Ground rods shall be copper-clad steel, 20mm (0.75 inch) round and 3 meter (10 feet) long, minimum.

-Bare copper grounding electrode conductors shall be installed 450-600 mm below final grade shall be no less than 70 mm2 (2/0 cu) stranded

-Ground resistance at any grounding point shall not exceed 25 ohms when measured more than 48 hours after rainfall. Additional ground rods will be installed as needed to ensure this value is not exceeded. Test results shall be submitted to the Contracting Officer by the Contractor documenting these results for all locations.

-Static grounding systems will be in accordance with UFC 3-520-01, UFC 3-535-01, NFPA 77 and MIL-HDBK-419A.

-Underground connections shall be exothermal welded utilizing molds and materials designed for that purpose by reputable established manufacturers.

-All above grade ground connections will use brass or stainless steel connectors designed specifically for grounding use and to minimize dissimilar metal corrosion issues.

Grounding shall be provided at each generator system, and shall be a permanently installed below grade counterpoise bonded by not less than four ground rods and with one rod located in a ground test well to provide accessibility for grounding system maintenance and testing.

9.2.11.1 Lightning Protection

Lightning protection design shall follow NFPA 780. Assume the same Isokeraunic levels as a medium level of activity in the USA if none is available for MES.

One TVSS (Transient Voltage Surge Suppressor) unit shall be provided at all service entrances, installed per the manufacturer's recommendations. These TVSS units will meet or exceed the latest UL 1449 standard. As a minimum, metal oxide varistors (MOV) technology shall be used. A service entrance shall include all first power or lighting panels downstream from a generator or transformer. The main distribution panel next to a generator or transformer would be considered a service entrance.

9.2.11.2 Static Grounding Points/ Aircraft Tie-downs

See Paragraph 2 for requirements.

9.2.11.3 Counterpoise Lightning Protection System

Provide a continuous counterpoise of number 25 sq mm minimum (#4 AWG) bare, stranded copper wire over the entire length of all primary circuits supplying airfield lighting per UFC 3-535-01.

9.2.12 T ransformers

9.2.12.2. Not used

9.2.13 Identification Nameplates

Major items of electrical equipment, such as the transformers, manholes (MH), pullboxes, hand holes, panel boards, street light poles, and load centers, etc, shall be provided with permanently installed engraved outdoor rated identification nameplates as per the specifications. These nameplates shall identify the equipment by type or function, ratings, configuration and specific unit number and be capable of resisting sunlight for 25 years if outdoors.

Contractor shall submit a schedule of name plates for all electrical equipment for approval of the Contracting Officer prior to ordering.

9.2.14 Warning Signs

In addition to standard warning signs required by the specifications, The Contractor shall perform an Arc Flash Hazard Analysis Study per the requirements of NFPA 70E or include existing published information for typical equipment similar to that to be used on this project, to determine Flash Hazard Boundaries and the Personal Protective Equipment (PPE) level needed. Specific arc flash hazard sign requirements will be made based on the arc flash analysis of electrical equipment to be submitted by the Contractor.

See Section 01 33 00.12 10 for more Electrical submittal requirements. Provide durable permanent indoor or outdoor warning signs on switchboards, panelboards, industrial control panels or other energized electrical equipment as required per BS 7671 or the NEC Article 110.16. The warning signs shall include the Flash Hazard Boundary and the Personal Protective Equipment (PPE) required for working on equipment hot. (Reference NFPA 70 Article 110-16; NFPA 70E Article 130.3; and UFC 3-560-01 Electrical Safety, O & M).

9.2.15 Mechanical Equipment

Contractor shall design, provide and install circuits for all mechanical equipment that require power and make the final connections.

9.2.16 Seismic Requirements

All electrical equipment shall be installed to meet the seismic requirements as defined by the International Building Code, IBC 2003 and seismic response coefficients as identified in -the Structural section.

9.2.17 Testing and Commissioning

In addition to requirements in other sections of this Contract the Contractor shall adhere to the following as a minimum:

The Contractor shall provide all necessary temporary power and equipment to operate the systems for testing and shall provide all test equipment. All test equipment performing any type of measurements or documenting field test values must have a recent valid certificate of calibration acceptable to the Contracting Officer.

After installation of all equipment, Contractor shall adjust that equipment as necessary and conduct checkout tests in accordance with the procedures contained in the equipment manufacturer's instruction books or as per NETA (National Electrical Testing Association) whichever is more stringent.

All systems shall be functionally checked and tested in the presence of the Contracting Officer for satisfactory operation prior to the commissioning the overall installed system.

After functionally checking individual systems or equipment the Contractor shall demonstrate, by operational tests, which the entire system will operate satisfactorily on remote and local control under all foreseeable operational scenarios. These scenarios will be determined by the Contractor and submitted to the Contracting Officer for approval and modification, if needed, prior to any system testing.

All tests will be thoroughly documented and witnessed by the Contracting officer or his designees. Contractor shall cooperate with, assist and train the appropriate Air Base personnel during the shakedown testing to exercise, test and evaluate the system in an operational environment to verify the system is ready for full operation.

Only after all testing and commissioning is completed will the Contracting officer will acknowledge substantial completion and acceptance of the Contract.

9.2.18 Onsite Training

The Contractor shall include all costs associated with providing a qualified manfacturers field representative to train base personnel in the operation of the newly installed electrical systems. Training shall be provided for all major electrical equipment, (i.e. generators, switchgear, lighting systems). The costs for handouts, pamphlets, course material, amnuals, etc. shall be included in the training by the Contractor. The training period shall consist of a minimum total of 8 hours for upto 8 designated base personnel per element.

The Contractor shall provide an hourly rate in the case the Contracting Officer wants to provide additional training for the operational staff. The course instructions shall cover operation and maintenance of all aspects of the equipment.

The Contractor shall submit information describing training to be provided, training aids to be used, duration, and schedules for Contracting Officer approval.

9.2.19 Warranty and Recommended Spare Parts

Contractor shall supply the equipment manufacturers' recommended testing equipment and tools, and the manufacturer's standard package of spare parts and spare circuit boards. The test equipment and spare parts shall be located as directed by the Contacting Officer and shall be sufficient for at least

two years of normal operation. The systems equipment and operation shall be warranted against manufacturer and installation defects after acceptance of the systems in accordance with other requirements of this Contract.

9.3 ELECTRICAL SYSTEMS

9.3.1 Generators

Contractor shall supply a comprehensive generator package from one vendor consisting of two 380/220V, 50HZ, 3 phase generators with paralleling switchgear integral with the generator control panel. The generators shall be prime power rated and sized to provide full load output for whichever design condition becomes the determining factor. Exact location of the generator sets shall be approved by the Contracting Officer.

Generator set unit shall be designed to meet all specified requirements, such as total power output after application of all de-rating factors for the elevation, ambient temperature and humidity of the project location and fuel type.

Generators shall operate in 'Stand Alone' or 'Island Mode' (no external power is available).

Design shall generally follow UFC 3-540-04N Diesel Electric Generating Plants guidelines where applicable. The Contractor shall perform and document calculations to determine the size of generator(s) required for successful operation of this project. As a minimum the output power shall be as specified for the maximum diversified demand load plus 25% spare capacity, running at 1500 rpm at an intake air temperature of 50 degrees C at 0.8 power factor. In addition the generators, when sized for two operating in parallel, shall not be sized smaller than:

-the prime rating required to serve the normal facility diversified peak demand with one generator running

-the prime rating required to serve the normal facility diversified peak demand, the fire pump and associated emergency facilities with two running.

The generators shall have automatic synchronizing equipment for parallel operation.

Generator:

-shall be capable of operation on JP8 (jet petroleum) and shall be capable of producing 110 percent rated output for a minimum of 3 hrs.

-fuel systems shall meet NFPA 30 and NFPA 37 or equivalent. Fuel storage and delivery system shall be grounded in accordance with UFC 3-460-01. Refer to paragraph 7 for additional fuel system requirements.

-shall have an integral manufacturers standard size day tank sized for approximately 6-8 hours of operation at 100 percent load.

-shall be electric start type.

-shall be provided with exhaust mufflers with sound attenuation, rated for residential areas.

-shall be skid mounted standard industry size, and provided in the

manufacturer's standard weatherproof/sound attenuation enclosure.

-unit shall be installed on a concrete pad. Pads shall protrude 150mm (6 inches) above grade.

-shall be provided with automatic alternating and paralleling controls for both generators.

-shall be grounded per the requirements of BS 7671 and NEC Article 250.

9.3.2 Generator Sunshade

The generator shall be installed under a sunshade. A minimum of one (1) meter clear space shall be maintained above all equipment under the sunshade(s). Weatherproof exterior lighting shall be provided for the sunshade. Minimum illumination level, utilizing a white color light, under the sunshade shall be 215 Lux (20 foot-candle).

The sunshade shall be provided with a minimum of two duplex weatherproof electrical outlets on both ends, to allow connection of power tools or portable lighting. Exact location of the sunshade(s) shall be coordinated with the Contracting Officer.

9.3.3 Secondary Power Distribution System

Contractor shall design, provide all material and install a complete electrical low voltage distribution system to provide low voltage power to all components of the airfield lighting system, fire protection equipment building and the aircraft shelters.

-All electrical installation shall be in accordance with the applicable requirements of NFPA 70 (National Electric Code, 2011 Edition).

-The Contractor will procure, design and install all wiring and equipment to the terminals of the distribution panel(s).

-All low voltage circuits shall be designed and installed to ensure the worst case voltage drop on any circuit is less than 5% maximum from the generator.

-Breaker sizing shall be coordinated to ensure downstream breakers are not any bigger than the next upstream breaker.

9.3.3.1 Electrical Service Entrance

An electrical service entrance per BS7671 shall be provided at the generator location into the main distribution panel.

-Service entrances shall be from underground if more than 2m from the secondary source and consist of multi-conductor copper insulated armored cable or individual conductors in conduit.

-The service capacity shall be based on a demand load that includes all known loads that are part of the present Contract and consider 25% estimated growth for any future phases.

-The service cable shall be sized at a minimum of 125% of the main distribution switchboard demand load or the main circuit breaker ampere rating whichever is larger.

-The sizing shall account for a 45 degree C ambient temperature.

9.3.3.2 Switchboards and Panelboards

The Contractor shall design, install and provide material for all lighting fixtures, cabling and equipment for the secondary distribution system to include but not necessarily limited to the following requirements:

-The contractor shall design and supply one 380V low voltage outdoor switchboard next to the generator location(s) mounted on a concrete pad under a sunshade. This switchboard will be served from the generator(s) via the automatic transfer switch or sychronizing gear. This switchboard shall have an adequate number of circuit breakers to serve the required secondary services with not less than two spare spaces for future secondary service loads and one spare sized to match the largest branch breaker used.

-Three phase service entrance panelboards rated 200A or greater than shall be provided with an ammeter/selector switch, voltmeter/selector switch and kilowatt hour meter. Selector switch shall be provided for reading individual phases.

-Main switchboards shall be UL listed for Service Entrance.

-All distribution shall be from circuit breaker switchboards or panelboards.

All panels shall:

-be provided with a minimum of 25% spare breakers installed for each size/type used and all spare space shall be equipped and ready for future breaker installations.

-have a minimum of 25% spare KVA capacity for future load growth.

-be circuit breaker type

-be provided with a typed directory, in English and Pashtun or predominant local dialect, that clearly lists each specific load for each circuit. The directory shall be placed within a durable heavy duty clear holder on the inside of each power panel door readable without removing from the holder. It should be suitable for making changes by field personnel over time.

-have a complete single line diagram provided on the inside of the panel door along with the directory, showing all panels serviced from the panel power source.

-lighting and appliance branch

-circuit panelboards shall be of the circuit breaker type conforming to NEMA PB 1 and UL 489 and shall be located on an end wall in each shelter. Miniature circuit breakers shall not be allowed.

-panelboard busses shall be tin-plated copper only. Aluminum busses are not acceptable.

The phase loading on panelboards shall be balanced as much as practical by the type of loads on the panel. This includes equally disbursing the spares between the phases. Panelboards shall have hinged covers door-in-door construction with a master keyed flush tumbler latches.

All circuit breakers shall be:

-labeled with an identification number corresponding to the panel schedule and drawings.

-rated at 20 amperes minimum for minimum branch circuit size.

-bolt-on- type and connected to all copper phase and neutral bus bar(s) within the panel boards.

-Daisy chain (breaker-to-breaker) connection(s) shall not be acceptable. Stab-in breakers shall not be allowed.

3-pole circuit breaker shall be a single unit and not made up of 3 single pole circuit breakers.

9.3.3.3 Receptacles

-The final circuit breaker serving receptacle circuits shall be rated 20 ampere.

-All outdoor receptacles will be ground fault interrupter (GFCI) type.

9.3.3.4 Cables and Wires

-Conductors shall be sized based upon BS 7671.

-All exterior secondary AC voltage cables shall be rated for underground duct installation and shall be rated for either 600V for secondary voltages above 300V and 300V for AC voltages less than 300V.

-All conductors shall be copper.

-Underground installation can be direct buried armored cable for 4 conductor 3phase circuits or individual cable in conduit. Power and lighting conductors shall be 600 volt, Type THHN (in dry locations), and THWN-2 or XHHW (in wet locations).

-All wiring shall be copper, minimum 4 mm sq (# 12 AWG).

-Proper wire nuts/connectors shall be used for splicing wire. No twist-wire connections with electrical tape wrapped around it shall be acceptable.

-No secondary power cable splices are allowed except for interior above grade lighting and receptacle circuits.

-All conductors shall be installed in a minimum size of 21mm (3/4-inch) conduit.

-Cabling systems such as mineral-insulated cables, metallic armored cables and nonmetallic-sheathed cables shall not be allowed.

-Conduit size shall be based on use of single conductor cable with THW or RHW insulation for sizes #1 AWG and smaller.

-Flexible metal conduit (FMC) is permitted only where equipment vibration is a consideration.

9.3.3.5 Secondary Raceways

This requirement shall include installation of secondary power distribution system (service entrances) in an underground cable system from the generator control panel(s) and secondary distribution centers, to the respective distribution panels.

-Exterior raceways (ductbanks, conduits) shall be installed at a slope towards a pullbox or hand-hole to avoid collection of water in the raceway.

-Maximum conduit fill will calculated be per BS 7671 but no more than 40%.

-All conduit stub outs below grade will be installed with a metal detectable marker at the stub out point and an above grade durable marker.

-For all conduit and ductbank, cable warning tape with magnetic strips suitable for detection by equipment designed for that purpose shall be provided 450mm below final grade (18inches) directly above all underground cables and conduits. For cable raceway more than 30cm wide, more than one warning tape shall be required.

-Ductbanks designed for secondary voltage feeders shall consist of PVC Schedule 40 conduits, 53mm (2 inch) minimum internal diameter.

-Conduit shall be concrete encased PVC schedule 40 under roads or paved areas. Cables crossing roads within concrete encased pipe sleeves is also acceptable.

-All runway cable crossings shall be in concrete encased ductbanks.

-Each encased ductbank shall be provided with a minimum of one (1) spare conduit of same size for future use. If different size conduits are used in one ductbank run then each size will have at least one spare.

-Direct buried conduits may be used for apron / taxiway edge lighting system and shall not be less than 53mm (2 inches) internal diameter.

-All outdoor below grade cables or conduits shall be installed per code requirements but no less than 600mm below final grade.

-All conduits shall be cleaned with a wire mandrel prior to the installation of cables.

-Spare conduits shall be capped at both ends with a pull string in place.

-Only RGS (Rigid Galvanized Steel meeting ASTM (American Society for Testing and Materials) standards) will be used above grade to enclose all wiring per BS 7671. They shall be surface mounted in unfinished areas. Conduit that is exposed along walls in areas that are subject to damage shall be RGS.

-Secondary duct-bank system shall include pullboxes/hand-holes for secondary power as required. -Conduits shall be securely and rigidly fastened in place as required by the BS 7671. No hardware, panels, boxes or other electrical equipment will be supported by conduit.

-All non-metallic conduits shall be no smaller than 21mm internal diameter (3/4 inches).

-Conduit size shall be based on use of single conductor cable with THW or RHW insulation for sizes #1 AWG and smaller.

-Flexible metal conduit (FMC) is permitted only where equipment vibration is a consideration.

-Plastic conduit is allowed only underground or under the floor slab.

Electrical duct depth, bedding, and cover shall be designed as required by the UFC design criteria for line size, material and vehicular loading. Utilities placed in traffic areas shall be designed for the greater of an AASHTO H20 vehicle loading or the wheel loading imposed by the design aircraft. Trench backfill shall be compacted to at least 95% maximum density. All reasonable measures shall be taken to ensure that no manholes shall be located inside the airfield. Where manholes/handholes fall within the airfield, the equipment shall be rated per UFC 3-260-01 and Air Force ETL 02-1.

Trenching will not be permitted to cross existing airfield pavements. All utility borings under existing airfield pavements shall be accomplished by dry boring, auguring or jacking following Contractor's submitted specifications, and under guidance from Air Force Technical Letter (TL) 04-4-1. All other excavations shall be accomplished by methods approved by the Contracting Officer.

9.4 NAVAIDS AND AIRFIELD LIGHTING SYSTEMS

9.4.1 Engineer and Installer Qualifications

The design of the airfield lighting systems shall be completed by qualified engineer(s) with a minimum of 5 years experience in designing airfield lighting systems. The Contractor shall provide a detailed resume and documented evidence of past performance for the engineer(s) designing these systems to the Contracting Officer for approval. The engineer(s) information shall indicate a thorough knowledge and experience with ICAO, FAA, military and other appropriate standards.

The engineer(s) shall work closely with the airfield lighting equipment manufacturer engineers to ensure that the systems are properly coordinated. The Contractor shall employ qualified installers thoroughly familiar with airfield lighting equipment and systems installation. The Contractor shall submit written verification that the installers are experienced with the installation, testing, and maintenance of these systems.

Information for these individuals demonstrating their qualifications and experience shall be submitted to the Contracting Officer (CO) for approval. If it is found the installers are not qualified at any time during the installation process, the Contracting Officer shall have the authority to reject the credentials of those personnel who will have to be replaced by personnel acceptable to the Contracting officer at the Contractors full expense and associated cost to the project, as a result of this replacement.

9.4.2 Airfield Lighting Systems Manufacturer Certification

All manufacturers of aviation and airfield lighting materials and equipment for this Contract shall be third party tested and listed in the FAA Advisory Circular (AC) 150/5345-53C, Airport Lighting Equipment Certification Program, ICAO (International Civil Aviation Organization) Annex 14 approved or STANAG 3316 (NATO Standardization Agency) -Airfield Lighting approved. Manufacturers shall be listed specifically for the material or equipment they are supplying. Manufacturers not listed as certified will not be acceptable.

Airfield Lighting System equipment (fixtures etc.) shall be sole source procured equipment to match existing installed equipment if practical and feasible while meeting the required standards of this scope.

9.4.3 Air Navigation Lighting

Contractor shall design, provide and construct a complete and functional air navigation lighting system for the project pavements interconnecting ducts, manholes, hand-holes, conduit, wiring, grounding counterpoise, and lighting fixtures. Those pavements include but are not necessarily limited to taxiways and parking aprons.

The design of the airfield lighting system shall be in accordance with the details in United Facilities Criteria (UFC) 3-535-01, Visual Air Navigation Facilities. All visual NAVAID lights shall be in conformance with UFC 3-535-02. Plastic light can bases and plastic bolts are not permitted. The D-B contractor shall submit preliminary plans for visual NAVAIDS with the first design submitted showing location, type, lens color, height and details. The D-B Contractor shall evaluate the existing visual NAVAIDS at the project airfield. The condition of existing NAVAIDS, conformance with current criteria, and need for any waivers of requirements shall be included in the Contractor-furnished Design Analysis. The Contracting Officer shall determine the disposition of deficiencies. The D-B Contractor is not responsible for correcting existing deficiencies unless directed to in these specifications.

The visual air navigation system shall include but not limited to Instrument Meteorological Conditions (IMC) for Precision Instrument Category I per Table 2-1A for the Strategic Airlift Apron and Table 2-2 for the Helicopter Apron (Air Force) in UFC 3-535-01 as noted below only:

1.Taxiway/Apron edge lights

2.Mandatory Guidance signs

3.Obstruction lighting (if justified). Obstruction lights shall not be Light Emitting Diodes (LED) based obstruction lights per AFSC.

4.The existing mimic panel, human machine interface (HMI) display or PC based display in the ATCT and existing ALE as part of the main runway lighting system, shall be modified / reprogrammed by the Contractor to the satisfaction of the Contracting Officer, as part of this contract with consideration for expansion of other airfield lighting.

Apron edge lighting shall follow the same guidelines as that specified in the UFC for taxiway edge lighting.

For airfield lighting:

-Runway edge lighting shall be modified for new taxiway construction.

-Elevated taxiway edge lighting (non-interleaved) shall be provided for all new taxiways and aprons.

-Apron Edge lights shall not be required behind aircraft shelters and other areas inaccessible to airworthy vehicles.

-Edge light fixtures and equipment shall be as specified herein but shall be of the same type, kind and by the same manufacturer as those of other new or proposed site facilities or as designated by the Contracting officer.

-All necessary 'mandatory instructions' and 'information' signs, with fixed message, shall be provided for the new taxiway(s) and apron and shall be internally illuminated.

-Plastic cans and bolts shall not be used.

-All light fixtures recessed and elevated shall be height adjustable to allow for additional pavement or grading in the future.

9.4.3.1. Airfield Lighting Enclosure (ALE)

The Contractor shall supply all electrical equipment needed for a complete and working airfield lighting control system for the Apron including all new power/control supply equipment needed for a complete CCR installation. The ALE loads will be added to the load calculation for the two generators called for in the Contract.

Install a new ALE in accordance with paragraph 9.6. The Contractor shall submit for Government approval, load calculations for the constant current regulators in accordance with UFC 3-535-01 Table 15-4, AGL Series Circuit Load Calculation Data Sheet.

The Contractor shall work with the Contracting Officer/Airfield Operations to minimize any operational lapses required for the upgrade work including providing all labor and temporary controls, to make the switchover during any time of the day, as designated by the Contracting Officer.

9.4.3.2. Constant Current Regulator (CCR)

All taxiway and apron edge lighting shall be connected to constant current regulator(s) (CCRs) installed in the new ALE. Contractor shall provide properly sized CCR(s) for the proposed taxiway and apron edge lighting system expansion if existing apron and taxiway edge lighting equipment, cabling and infrastructure cannot carry the new load within their design ratings and limits. One spare CCR shall be provided as part of the contract if the Contractor uses an existing spare. Provide CCR load calculations in the Design Analysis. Calculations shall be shown in the form of UFC 3-535-01, Table 15-4. Load calculations for existing regulators shall include data for new and existing loads.
Reference Chapter 15 in UFC 3-535-01 for CCR design criteria.

CCR(s) shall as a minimum:

-be provided as required, in the main ALE. Taxiways and aprons will have independent CCR circuits as required by the relevant UFC guides.

-be dry type, ferro-resonant, for taxiways and aprons with the number of brightness steps to match existing taxiway regulators or for mission requirements.

-be sized for the apron lighting, the taxiway lighting as shown on the layout drawings and maintain a minimum of 20% spare capacity based on the Contractor's maximum design loads and CCR ratings.

-have a minimum rating of not less than 10KW each

-be FAA type L-829, Class 1, Style 2 with monitoring.

-be solid state type and be microprocessor assisted and have an output transformer for automatic current regulation under varying load and input variations.

-be capable of operating all functions locally.

-have true RMS output current digital ammeter.

-be capable of compensating for an input voltage variation of plus or minus 15%.

-be sized to have a minimum of 20% spare capacity based on the Contractor calculated design loads.

-be programmable with complete monitoring of regulator functions.

-have a 48V DC control voltage for local control of the lights

-have proper working and maintenance space provided around the CCR.

-each CCR shall be provided with an S-1 plug cutout in a NEMA 1 enclosure with door and handle for the output side of the regulator.

All airfield light fixtures shall be installed on appropriate FAA type (aircraft loading or non-aircraft loading) light bases.

All airfield lighting circuits shall be provided with identification tags in each light base, hand-hole or manhole, showing CCR#, circuit# and ampacity rating for the respective circuit.

9.4.4 Obstruction Lights

Obstruction lights shall be in accordance with UFC 3-535-01 Chapter 6, Standards For Obstruction Lighting. In addition to the obstruction lighting specifically required in this RFP, provide obstruction lights on all structures that penetrate the imaginary surfaces identified in UFC 3-260-01 Airfield and Heliport Planning and Design. Lights shall be dual, minimum 100 watt lamp each; steady continuous burning, color red and FAA approved per AC 150/5345-43. Provide the power source, panels and facilities to deliver a complete and working system.

The design submittals must show in the design analysis clearly if obstruction lighting is or is not required based on the Contract installed facility elevations and locations from affected runways and other landing or takeoff zones

9.4.5 Raceway and Cables

Airfield 5000V lighting cable shall be 16 sq. mm (6 AWG) minimum and meet UFC requirements. All airfield lighting circuits shall be provided with identification tags in each light base and hand-hole , showing CCR#, circuit# and ampacity rating for the respective circuit. Contractor shall be responsible for providing hand-holes and/or pull boxes, as required by the applicable referenced codes and publications.

For airfield lighting circuits, all new underground duct shall be concrete-encased PVC electrical duct in conformance with Table 12.1 in UFC 3-535-01. Power and control circuits shall be in separate duct.

Handholes, or light bases shall be at a maximum spacing of 400 feet.

System duct shall not be less than 50mm (2 inches) in diameter or bigger as dictated by the UFC requirements.

9.4.6 Signs and Markers

All necessary 'mandatory instructions' and 'information' signs, with fixed message, shall be provided for the new taxiway. Signs shall be internally illuminated.

All mandatory signs and markers will be included for airfield pavements included in the project. Signs and markers consist of:

Guidance Signs - Informative

Guidance Signs - Mandatory

New signage must be consistent with an Air Base signage master plan. If a master plan does not exist, the D-B Contractor shall prepare a signage layout in conformance with Section 9.5 of UFC 3-535-01, or STANAG 3316 or ICAO as has been determined, and submit the layout with the first design submittal. All signage and markers shall be illuminated. Lighted signage and markers may be connected to the appropriate edge light series circuit for both power and control.

9.4.7 Grounding and Bonding

Provide an equipment grounding system for airfield lighting circuits in accordance with UFC 3-535-01, Paragraph 12-5. Provide a counterpoise lighting protection system for airfield lighting circuits in accordance with UFC 3-535-01, Paragraph 12-6.

9.4.8 Manholes and Handholes

The design of new manholes and handholes shall be based on the following criteria: Manholes and handholes shall not be located in pavement subject to normal aircraft operation (i.e. runways, taxiways and aprons). When located in paved shoulders or aprons they shall have a structural capacity for a 75,000# single wheel load. When located in unpaved shoulders they shall have a structural capacity for a 50,000# single wheel load. When located outside of unpaved shoulders they shall have an AASHTO H-20 rating. Wheel load ratings are at 250 psi tire pressure.

9.4.9 Inspection and Testing

9.4.9.1 Checklists and Manuals

At the completion of visual NAVAID installation, the Contractor's Designer of Record (DOR) or Quality Control Representative (QCR) shall submit the completed applicable checklists included in UFC 3-535-01, CHapter 14. The DOR and QCR shall certify that the checklists were completed during an on-site inspection and are correct. The Contractor shall also submit six (6) copies of operation and Maintenance (O&M) manuals furnished by the equipment manufacturers for all visual NAVAIDS.

9.4.9.2 Operational Testing

Upon submission of the checklists and O&M manuals, the Contractor shall aim

and adjust the equipment as necessary and conduct checkout tests in accordance with the procedures contained in the O&M manuals. The Contractor shall demonstrate, by operational test, that the entire system will operate satisfactorily on remote and local control. The Contractor shall include Air Base personnel during the shakedown testing to exercise and test the system in an operational environment to determine if the system is ready for full operation.

9.5 AIRCAFT SHELTER ELECTRICAL REQUIREMENTS

9.5.1 Lighting and Controls

Interior lighting for the aircraft shelters shall be high intensity discharge (HID) white light type light fixtures suspended from the shelter's framing. Follow UFC 3-530-01 Design: Interior and Exterior Lighting and Controls for lighting level criteria.

Emergency egress lighting will be accommodated by using local battery backed wall packs meeting requirements of NFPA 101. Illuminated -EXIT- signs will employ red LED lamps on a polished aluminum field with local battery backed power supplies.

Exterior building lighting fixtures shall be wall pack type fixtures with emergency ballasts per ASHRAE 90.1 2007, installed over doors. Lamps shall be metal halide. Fixtures shall be mounted near each entrance for the building.

Exterior building lighting control shall be with photocell but can be turned off with an inside switch.
Fixtures shall be wired from within the building and shall conform to the interior wiring standards described in this section.

9.5.2 Receptacles (or Sockets)

13 ampere, 250 volt, British style switched duplex receptacles shall be provided in all indoor or outdoor spaces of the facility rated accordingly except as noted below.

A maximum of 10 receptacles shall be allowed on one 20A breaker where loads are not predetermined. If loads are known, adjust receptacle quantity down to match breaker sizes as necessary for a given circuit.

All receptacle circuits for general purpose use outdoors, near sinks, in designated kitchen areas and in bathrooms will be protected by a British Standard ground fault interrupter breaker type like the residual current device (RCD) rated for 16A, 10mA trip.

9.5.3 Architectural/Mechanical Connections

Provide branch circuits, disconnect switches, magnetic starters, and other related electrical equipment and material for architectural, mechanical equipment and environmental equipment to be installed in the shelters This shall include HVAC units, unit heaters, exhaust fans and other mechanical equipment in the shelter.

9.5.4 Equipment Sizing Requirements and Ratings

Except as specifically noted otherwise, minimum required capacity of the equipment bus shall be computed from the estimated maximum demand (EMD) for the panelboard and be specified as having the next larger manufactured

standard bus or main lug size. Overcurrent protection for panelboards with heavy motor loads, sizing must also consider starting current of the largest motor or motors in addition to the continuous demand amperes.

9.5.5 Feeders and Branch Circuits

Branch circuit sizes shall be based on the load supplied, EMD and voltage drop requirements.

Feeders to distribution equipment such as panelboards shall be sized to allow the full capacity of the panelboards bus bar amperage rating to be used.

Voltage drop shall be taken into account when sizing branch circuits.

9.5.6 Fire Alarm System

Complete Fire Detection and Alarm System shall be provided in each shelter. System shall include fire alarm control panel, pull stations, horns, strobe lights, and smoke and heat detectors, as required. Fire alarm cable shall be installed in metal conduit system.

The system shall be capable of automatically transmitting the alarm signal to the local Fire Department / Fire Station. Signal transmission shall be by means of a system compatible with the existing base system. System shall be arranged to operate audible and visual alarm signals throughout the shelter upon activation of a manual fire alarm pull station, area smoke detection (where required), or suppression system. Manual alarm pull stations will be located at all exit doors and as otherwise required by NFPA 72.

System design shall be in accordance with the requirements of NFPA 72. Fire alarm system shall be complete and a standard product of one manufacturer. Exterior (site) cable installation and connection shall be provided.

9.5.7 Lightning Protection

Provide a lightning protection system in accordance with UL 96A, ETL 90-6 and NFPA 780. Lighting protection system provided shall include (but not be limited to): -air terminals -main conductors down conductors -bonding conductors, and -ground rods (interconnected by a perimeter ground ring if necessary)

9.5.8 Static Grounding

See requirements in paragraph 2.

9.5.9 Installation

The Contractor shall install system components, panelboards, lighting, equipment connections, etc., including Government furnished equipment and appurtenances in accordance with the manufacturer's instructions and shall furnish necessary connectors, terminators, interconnections, services, and adjustments required for a complete and operable system. Flexible cords or cord connections shall not be used to supply power to any components, except where specifically allowed in writing by the Contracting Officer.

Grounding shall be installed as necessary to preclude ground loops, noise, and surges from adversely affecting system operation.

9.5.10 Hazardous Locations

Aircraft shelters shall have a hazardous rating Class 1, Div. 1, Group D, from floor level and below per NEC Article 513. Aircraft shelters from 18 inches away from the walls and up to the shelters door level and shall have a Class 1, Div. 2, Group D per NEC Articles 513 and 513.3(B)

9.6 AIRFIELD LIGHTING ENCLOSURE (ALE) (BID OPTION)

9.6.1 General Description

9.6.2 GENERAL REQUIREMENTS (ALE)

9.6.2.1 Power

Power will be provided to the ALE from the generators described in Paragraph 9.3.1 Generators.

9.6.2.2 Airfield Lighting Enclosure (ALE)

The Contractor shall design and construct a new airfield lighting enclosure (ALE) as described in the Architectural section but no less than 2.4M wide by 3.65m in length by 2.4m in height internally. Site orientation of the enclosure shall be coordinated with the Contracting Officer. Location will be adjacent to the eastern helicopter shelter and in compliance with UFC requirements.

The electrical equipment room will house all apron and taxiway electrical equipment including but not limited to power panels, constant current regulators and control equipment. The Contractor will increase the room size as needed to accommodate all electrical equipment needed for a complete and working airfield lighting control system.

The ALE shall:

a. utilize a Programmable Logic Controller (PLC) for the airfield lighting system controls.

b. have room for the control equipment described in Paragraph 9.4 NAVAIDS AND AIRFIELD LIGHTING SYSTEMS.

c. be controlled locally from the ALE. The local control in the new ALE shall have provisions for connecting to the existing main ATCT via radio control to allow full control of all systems in the new ALE from the existing ATCT.

d. include a 114 mm schedule 40 PVC conduit from one wall through the slab to three (3) meters outside the ALE.

e. include a 114 mm schedule 40 PVC conduit from one wall through the slab to within 10 m of the existing runway. The conduit shall be direct buried a minimum of 1 meter under the ground and capped with a solvent welded cap with a marker identifying the conduit location. Inside the ALE, the conduit shall extend 1 meter above the slab and be capped with a solvent welded cap. The conduit and fittings shall be listed in RUS IP 344-2.

f. be airconditioned as needed to control the internal ambient temperature and humidity to stay within equipment operating ranges based on a 45deg C maximum outdoor ambient temperature.

The existing mimic panel, HMI display or CPU based display in the ATCT shall

be modified as part of this contract to reflect the connecting taxiway with consideration for expansion of other airfield lighting that might be served from the new ALE.

9.6.2.2.2 Constant Current Regulator (CCR) Circuits

Constant Current Regulator (CCR) circuits shall be designed to accommodate the strategic and helicopter apron and taxiway lighting.

9.6.3 ELECTRICAL SYSTEM SCOPE DETAILS (ALE)

9.6.3.1. Generator, Automatic Transfer Switch and Secondary Power Distribution System

The generators, automatic transfer switches and secondary power distribution shall be as required and in accordance with Paragraph 9.3 ELECTRICAL SYSTEMS.

9.6.3.2 Interior electrical systems

The Contractor shall design, procure and construct an interior electrical system for the ALE as needed to accommodate the helicopter apron and taxiway lighting.

9.7 Apron Flood Lighting

9.7.1 References

UFC 3-535-01, Design Standards for Visual Air Navigation Facilities

Army TM 5-811-5, Army Aviation Lighting

IES IES-RP-14-1987, IES Recommended Practice for Airport Service Area Lighting

9.7.2 General

The Contractor shall provide a lighting system to floodlight the Helicopter Parking Apron, including design and all fixtures, hardware, poles, power supply, controls, and appurtenances needed to provide a fully functional lighting system.

9.7.3 Illumination

Upon completion, the Contractor shall test the lighting system which shall meet or exceed the following criteria: All are4as designated loading zones shall be illuminated to a minimum of 21.52 lux (2 foot-candle) in the horizontal plane, and all aircraft parking areas shall be illuminated to a minimum of 5.3 lux (0.5 foot-candle) in the horizontal plane. The horizontal plane shall be at the pavement surface. The ratio of maximum to minimum illumination should not exceed 4 in any 20-meter wide strip on the apron, parallel to the apron edge where the lights are located. The Contractor shall provide a point-to-point lighting plan showing that the design meets the minimum illumination requirement in the horizontal plane throughout the apron area to be illuminated.

9.7.4 Poles

The Contractor-furnished drawings shall show:

a. Pole locations with dimensions between poles and the distance from the

apron pavement edge.

b. The clearance line required to provide the minimum required required wing tip clearance for the critical aircraft taxiing along the near edge of the apron.

c. The elevation of the top of pole and the elevation of the obstruction imaginary surface at the pole location.

d. Design for local wind load requirements. Provide design calculations for review in the first design submittal.

9.7.5 Floodlights

The Contractor shall provide the following:

a. An aiming table with horizontal and vertical aiming angles for each light fixture.

b. A floodlight fixture detail showing horizontal and vertical aiming angles relating to the aiming table.

c. Glare louvers on all lighting fixtures. Submit a ray diagram analysis to assure no glare (direct sight of the fixture lamp) to the Air Traffic Control Tower and to the pilots on approach. The floodlights may require custom louvers to meet this criteria.

9.7.6 Foundations, Poles, and Supports

Floodlight poles, foundations and luminaires supports shall be designed using dead load, ice load and wind loading. The loads and design shall meet the requirements of AASHTO Standard Specifications for Structural Supports for Highway Signs, Luminaires and Traffic Signals, latest edition. Wind loading shall be the Annual Extreme-Mile 30 Feet Above Ground, 50-Year Mean Recurrence Interval determined for the project location. Foundations shall be reinforced concrete. AASHTO publications can be obtained at: AASHTO-American Society of State Highway and Transportation Officials, 444 North Capitol Street, N.W., Suite 249, Washington, DC 20001.

9.7.7 Floodlight Controls

Floodlight circuiting shall include manual on-off controls at the apron lighting location with remote controls in the Air Traffic Control Tower and at the point of floodlight electric service connection.

9.8 Aviation Lighting, Mooring and Grounding Drawings

The D-B Contractor shall provide drawings in the first submittal as follows:

9.8.1 Visual NAVAIDS

a. Plans

b. Schedules

c. Details

9.8.2 Airfield Lighting Enclosure

a. Plan showing locations of constant current regulators, airfield lighting, control systems, diesel-engine generator set

b. Elevations showing regulators, generator set, switch gear panels and wireways

c. Details and wiring diagrams

9.8.3 Apron Flood Lights

a. Location plan of lights with aiming data

b. Plan with point-by-point light intensities showing compliances with minimum light intensity requirements.

10. AIRCAFT SHELTER COMMUNICATIONS REQUIREMENTS

10.1 General

10.1.1. Applicable Specifications

The Publications listed below form a part of this specification.

United States Department of Agriculture, Rural Utilities Service

RUS Bulletin 1751F-643 (2002) Underground Plant Design

RUS Bulletin 1751F-644 (2002) Underground Plant Construction

RUS Bulletin 1753F-151 (2001) Construction of Underground Plant, Parts II&III

RUS Publication IP 344-2 (2009) List of Materials Acceptable For Use on Telecommunications Systems Of RUS Borrowers.

RUS Bulletin 1753F-201 (1997) RUS Standard for Acceptance Testing and Measurements of Telecommunications Plant, (PC-4).

RUS Bulletin 1753F-401 (1995) RUS Standard for Splicing Copper and Fiber Optic cables, (PC-2).

RUS Bulletin 345-65 (1978) Shield Bonding Connectors (PE-33).

RUS Bulletin 345-83 (1982) REA Specifications for Gas Tube Surge Arrestors (PE-80).

RUS Bulletin 1753F-208 (1993) Specifications for Filled Telephone Cables with Expanded Insulation (PE 89)

RUS Bulletin 1753F-601 (1994) Specifications for Filled Fiber Optic Cable (PE-90)

Telecommunications Industry Association (TIA)

ANSI TIA 568-C.1C (2009) Commercial Building & Annexes Telecommunications Cabling Standard.

ANSI TIA 568-C.1.1 A1 (2009) Commercial Building Telecommunications Cabling Standard, Part 1, General Requirements. Addendum 1-Minium 4 Pair UTP and 4 pair ScTP patch Cable Bend Radius. Addendum 1.

ANSI TIA 568-C.1.2 A2 (2009) Commercial Building Telecommunications Cabling Standard, Part 1, Addendum 2 Grounding and Bonding Specifications for Screened Balanced Twisted Pair Horizontal Cabling.

ANSI TIA 568-C.1.4 A4 (2009) Commercial Building Telecommunications Cabling Standard, Part 1, Addendum 4, Recognition of Category 6 and 850nm Laser-optimized 50/125 um Multimode Optical Fiber cabling.

ANSI TIA 568-C.2 (2009) Commercial Building Telecommunications Cabling Standard, Part 2, Balanced Twisted-Pair Cabling Components, Annex K, 100 ohm Screened twisted pair cable.

ANSI TIA 568-C.2-2, A2 (2009) Commercial Building Telecommunications Cabling Standard, Part 2, Balanced Twisted-Pair Cabling Components, Addendum 2.

ANSI TIA 568-C.2-1,A1 (2009) Commercial Building Telecommunications Cabling Standard, Part 2, Balanced Twisted-Pair Cabling Components, Addendum 1-Transmission Performance Specifications for 4-pair 100 ohm Category 6 cabling.

ANSI TIA 568-C.2-5, A5 (2009) Commercial Building Telecommunications Cabling Standard, Part 2, Balanced Twisted-Pair Cabling Components, Addendum 5. Corrections to TIA/EIA-568-B.2.

ANSI TIA 568-C.3 (2008) Optical Fiber Cabling Components Standard.

ANSI TIA 568-C.3-1 (2008) Optical Fiber Cabling Components Standard. Addendum 1-Additional Transmission Performance Specifications for 50/125 um Optical Fiber Cable.

ANSI TIA 569-B (2009) Commercial Building Standard for Telecommunications Pathways and Spaces.

ANSI TIA 606-A (2008) Administrative Standard for the Telecommunications Infrastructure.

ANSI TIA J-STD-607-A (2009) Commercial Building Grounding (Earthing) and Bonding Requirements for Telecommunications.

United Facilities Criteria (UFC)

UFC-3-580-01 (2007) Telecommunications Building Cabling Systems Planning and Design.

Department of the Army

AR 380-5 (2000) Department of the Army Information Security Program National

SIPR Net Technical Guide (2008) Technical Guide for the Integration of Secret Internet Protocol Router network (SIPRNET)

(2010) Technical Guide for Installation Information Infrastructure Architecture (I3A)

(2008) Worldwide Outside Plant Design and Performance Requirements TR No. AMSEL-IE-TI-06001-7.

Security Telecommunications and Information Systems Security (NSTISSI)

NSTISSI No. 7003 (1996) Protective Distribution Systems (PDS)

NSTISSAM TEMPEST /2/95 (1995) RED/BLACK Installation Guidance United Facilities Criteria (UFC) UFC-3-580-01 (2007), Telecommunications Building Cabling Systems Planning and Design

Department of the Air Force

United States Air Force 2002) Engineering Technical Letter (ETL) 02-12, Communications Information Criteria for Air Force Facilities.

10.1.2 The Communications System Design

The communications design and construction of the systems shall be in accordance with the references and the requirements contained herein unless otherwise noted. The design and selection of materials and equipment and all other communication system related submittals shall be sent to the ISEC Communications Engineer at MED through the COR for review in lieu of the site office. The use of RUS listed materials for the Outside plant (OSP) and ANSI/TIA and UL listed material for the inside plant (premise wiring) shall be a requirement and not an option.

10.2 Communication Outside Plant Pathways and Spaces

10.2.1 Communications Manholes

The Contractor shall install one (1) manhole outside the telecommunications room with four (4) inch, (114 mm) schedule 40 PVC conduit stub outs on three sides future ties into existing infrastructure by others. The manhole shall be constructed in accordance with the references and the drawings.

10.2.2 Communications Exterior Conduit

The underground conduit from the manhole to the Telecommunications Room and helicopter shelters shall be direct buried (minimum of 1 meter below the finished grade), four (4) inch, (114 mm) schedule 40 PVC. There shall be two (2) conduits installed to each shelter building and two (2) conduits installed from manhole to Telecommunications Room. They shall be schedule 40, nominal 4 inch PVC conduits, one with inner duct. The inner duct can be either four (4) 1 inch field installed PE or PVC innerducts, four (4) factory installed 1.19 or 1.25 inch (manufacturer dependent) PE or PVC inner ducts or two (2) three cell fabric inner ducts. All ducts will be sealed with expandable duct plugs and provided with synthetic pull tape. The conduit shall be UL listed and listed on the RUS list of materials acceptable for use on RUS projects, RUS publication IP344-2. The conduit, the conduit fittings (elbows, connectors, couplings etc.) and solvent cement shall be the same brand. ABS plastic duct terminators (not required to be the same brand as conduit) shall be cast into the manhole walls for use in terminating the conduit. The conduit shall be solvent welded to the terminators. Cable racks with cable hooks, bonding ribbon and braid and all other necessary manhole hardware shall be installed in accordance with the referenced standards and drawings. Each vacant duct shall be provided with a synthetic pull tape of at least 1200 lbs. tensile strength. The pull tape shall be terminated on an eye bolt integral to the duct plug.

One conduit shall be stubbed up inside the aircraft shelter at minimum of 100mm aff. Provide a 19mm fireproof/ fire rated plywood backboard mounted on unistrut, kindorff, etc. above the conduit stub ups for installation of fiber

optic combination units and other communication system hardware. The second conduit will be routed 1220 mm above finished grade to a 305 mm square junction box on the outside of the shelter wall.

10.3 Exterior Cables

10.3.1. Copper cable

The contractor shall install one 25 pair copper cable into each helicopter shelter from the communications room, to the exterior PET. The copper cable shall be listed in RUS Bulletin IP 344-2. The copper cable shall be 24 AWG, RUS PE89 type, foam skin polyolefin, with an outer layer of solid colored polyolefin and a copolymer coated 8 mil aluminum tape shield. The Contractor shall install a larger cable that will contain all required cable pairs for the shelters and wrap it around the manhole two times and clear and cap the cable pairs in discrete clear and cap connectors in a splice closure. Out of that closure, the Contractor shall install the 25 pair cables to each shelter. The one spare pair shall remain cleared and capped as spare in the closure. The splice closures shall be RUS listed and flash tested, (with the results being approved by the MED/ISEC Engineer before the system is turned over), in accordance with the manufacturers requirements except nitrogen shall be used in lieu of compressed air. The Contractor shall provide the quantity of encapsulant required for the site personnel to properly encapsulate the fiber optic closures after connection to the base system.

10.3.2. Fiber optic cable.

The contractor shall install fiber optic cables from the manhole between the helicopter shelters to the communications cabinet mounted on the backboard. The fiber optic cables shall be listed in RUS IP 344-2. The fiber optic cables shall be a dual window, single mode, RUS PE90 type, with a 6 mil, copolymer coated steel shield. The single mode fiber shall not have any internal splices and have a maximum loss of .4dB/Km at 1310nm and .3dB/Km at 1550nm. The fiber optic cables shall be installed, grounded/bonded, spliced and tested in accordance with RUS standards. The fiber splice closures shall be flash tested in accordance with the manufacturer's recommendations except that nitrogen will be used in lieu of compressed air, with the results being approved by the MED/ISEC Engineer before the system is turned over. The Contractor shall provide the quantity of encapsulant required for the site personnel to properly encapsulate the fiber optic closures after connection to the base system. The fiber optic splice closures shall be equipped with splice trays that properly hold the fusion splice protectors (stainless steel rod with heat shrink tube). The contractor shall provide two (2) 12 strand fiber optic cables (NIPR net) to each shelter.

10.4 Exterior Cable Termination

10.4.1 Copper cable

The Contractor shall install a 25 pair protected entrance terminals (PETs) on the exterior wall of the shelter next to the junction box for each 25 pair copper cable. The PETs shall be equipped with three element heavy duty gas tube protectors with sneak current protection and be the type where no continuity between input and output can be achieved unless the protector unit is installed. The PETs shall be listed on the RUS list of material, (Publication IP 344-2). The PETs shall be equipped with factory installed punch down blocks in a splicing chamber to terminate the incoming cable and the output from the protector fields connected to factory installed punch down blocks which are part of the PET. The Contractor shall mount a category

6, 110 block inside the shelter room the PET output block and cross connect all outside plant cables to that "subscriber PET block". Each outside plant cable pair will be allocated four pairs on the output cross connect block. The Contractor shall provide one jumper per voice outlet.

10.4.2 Fiber Optic Cable, Combination Units
The fiber optic cable shall be terminated in combination units that will allow splicing and patching within the same enclosure. The enclosures shall be sized to contain a minimum of 48 fibers. The NIPR shall be terminated in a wall mounted rack on the backboard. The single mode outside plant fiber cables shall be fusion spliced to single mode fiber pigtails equipped with a factory terminated SC connector. Each fiber cable (NIPR net, SIPR net) shall have its own fiber optic combination unit. The fusion splices shall be protected by a steel rod and heat shrink tube. The single mode pigtails shall have an insertion loss of <.35dB and a return loss of better than -55dB. The maximum allowable fusion splice loss as measured by the splicing machine will be .02dB as measured by the fusion splicing machine and .2dB as measured by an OTDR. The fiber optic connectors shall be SC type and be mounted on a connector plate that fits in the combination unit. The connector plate shall contain six single mode duplex SC connectors. One factory manufactured single mode fiber optic patch cord, SC-SC, shall be provided per single mode patch panel port. The single patch cord shall have a mated pair insertion loss of <.35dB and a mated pair return loss of <-55dB.

10.5 Inside Plant Cable

10.5.1 Copper, Horizontal Cable (Station Cable)

The contractor shall install the inside plant (premise) horizontal cable and outlets. The subscriber cable and unsecure data cable will be a minimum 24 AWG; Category 6 shielded twisted pair (STP), for non secure data. All station cable to be plenum rated.

10.6 Station Outlets

10.6.1 Voice/Data Outlets

The voice/data outlets will be RJ 45, T568A configuration, Category 6 STP keystone module type, that snaps into the wall plate. The standard outlet configuration will be a six plex plate with two (2) 4 pair, Category 6 STP modules, one gray voice with gray cable, one green data with green cable and four blank filler plate modules. The Contractor shall install one standard outlet configuration on each outside wall and an additional two more at a location provided by the COR.

10.7 Outlet Boxes

All non-secure telecom outlets shall be mounted in a surface mounted 119mm square, steel box, 54mm deep.

10.8 Patch Panels

10.8.1 Voice/Data Patch Panels, Non-secure

The contractor will terminate voice/data cables (from the voice/data outlets) floor relay rack mounted, Category 6, ANSI TIA/EIA T568A configuration STP patch panels. The largest size patch panel shall be 48 ports and the smallest shall be 24 ports. One factory manufactured Category 6 rated green STP patch cord (RJ45-RJ45) shall be provided per patch port.

10.9 Backboards

The communication system backboard shall be used to mount the fiber optic combination units and all other outside plant material required to bring communications into the fabric shelter.

10.10 Data cabinets

10.10.1 Non secure cabinets

The non secure cabinet shall be steel, NEMA 12, three sections, (swing out) large enough to house the PET, the cross connect block, the fiber optic combination unit and the patch panels. The cabinet shall be UL listed and equipped with one dedicated 13 ampere, 230vax receptacle.

10.11 Bonding/Grounding and Labeling

Bonding, grounding and labeling shall be done in accordance with the U.S Army I3A requirements, ANSI TIA/EIA 607-A, ANSI TIA/EIA 606-A and the Outside plant references.

10.12 Testing

The Contractor shall perform Category 6 link tests in accordance with ANSI/TIA 568-C.1 and ANSI/TIA 568-C.2. Test shall include wire map, length, insertion loss, NESXT, PSNEXT, ELFEXT, PSELFEXT, return loss, propagation delay, and delay skew.

10.12.1 Outside Plant and Inside Riser Copper Cable

The outside plant copper cable (telephone) cable shall be tested for grounds, shorts and crosses.

10.12.2 Fiber Optic Cable

The Contractor shall perform optical fiber tests in accordance with RUS Bulletin 1753F-201. The hard copy printout shall be provided to the COR.

10.12.3 Test notification

The Contractor shall notify MED a minimum of 6 weeks before testing begins to allow MED time to send an Engineer to observe Testing.

11. ATTACHMENTS

The following attachments form an integral part of this specification:

Cover Sheet
Index of Drawings
C-001 Locus Plan
C-101 Demolition Plan - Base Bid
C-102 Demolition Plan - Option 1
C-110 Site Plan - Base Bid
C-111 Site Plan - Option 1
C-115 Pavement Marking Plan - Base Bid
C-116 Pavement Marking Plan - Option 2
C-501 Typical Apron Pavement Section
C-502 Concrete Joint Details

C-503 Pavement Marking Details
C-504 Tie Down Details
XT-501 Communication Details Sheet 1 of 4
XT-502 Communication Details Sheet 2 of 4
XT-503 Communication Details Sheet 3 of 4
XT-504 Communication Details Sheet 4 of 4
A-101 Floor Plan
A-201 Building Elevations
A-301 Building Section

Appendix A - Topographic Survey Scope of Work

-- End of Section --

APPENDIX A

Topographic Survey

Scope of Work

1. Project Description. The services described hereinafter pertain to surveying and mapping services for the project at Mazar-e-sharif Air Base, Afghanistan.

2. Work to be Performed. Establish horizontal and vertical control for project site construction. Secure a minimum of five (3) benchmarks to survive all construction activities of this project. Conduct topographic survey of locations for the design and construction of the project, to include areas where drainage will influence the design of the drainage system. Conduct a topographic as-built survey of the project site upon completion of construction. This is to include all areas where work is to take place.

3. Submittal Requirements.

a. Final Survey and Mapping - One (1) set of minimum 600 by 900mm size hard copy. All drawings shall be at computer generated and provided on a CD ROM. Each sheet shall include a north arrow, legend, survey data, datum data and sheet index plan showing its relationship with the entire project area. In addition, one drawing, at a conventional scale shall show the entire survey area. The computer files shall be georeferenced.

b. All field books and computation sheets with sketches.

c. One bound booklet with adjusted coordinates and elevations. Also detailed descriptions of each concrete survey monument established on site.

d. Diskettes or CD ROM containing digital file(s) of the final adjusted survey, in the format specified in Attachment 2. One of the files shall contain the entire survey area, the other files shall contain the individual sectors used to create the hard copy sheets.

e. Topographic survey drawings shall be submitted to the Contracting Officer field office representative, for field verification of the survey prior to final submittal to the Corps of Engineers Winchester office.

4. Attachments.

1- Survey Requirements
2- Digital Format

ATTACHMENT 1

SURVEY REQUIREMENTS

1. General. The following paragraphs describe the Scope of Work for performing the surveys and the digitization of the topographic data.

2. Survey Requirements.

2.1 Horizontal and Vertical Control.

2.1.1 Coordinate Systems. The survey shall be based on the Universal Transverse Mercator Grid Zone 38, World Geodetic System (WGS84) and the elevation should be height above ellipsoid (WGS84) and sea level (EGM96). If there has been gravitational surveys performed nearby, these shall be noted. A survey database file for all features should show both ellipsoid height and Geoid height and WGS84 latitude/longitude as well as UTM coordinates. WGS84 data shall be corrected to WGS84 (G1150) datum reference. GPS benchmarks shall be documented at ITRF2000 coordinates referenced to epoch 1997. Basic project control surveys will be performed using precise differential carrier-phase tracking Navstar GPS measurement procedures or electronic data collection total stations.

2.1.2 Accuracy Requirements. Differential GPS baseline vector observations will be made in strict accordance with the criteria contained in EM 1110-1-1003, except as modified or amplified herein. Conventional survey observations shall be made in accordance with criteria contained in EM 1110-1-1005 for General Site Development, except as modified or amplified herein.

2.1.3 Control Systems. Install a minimum of three survey monuments on each survey site following the requirements contained in EM 1110-1-1002. A minimum of two benchmarks must be visible by line of site at each station. Monuments placed on project site shall be designed to survive proposed construction operations by use of proper location and construction techniques. The horizontal and vertical control shall be tied to the existing control horizontal and vertical.

2.1.3.1 All of the control points established at the site shall be plotted at the correct coordinate point and shall be identified by name or number, and adjusted elevations.

2.1.3.2 All Topographic survey point sets produced with conventional survey instruments shall be referenced directly to horizontal and vertical control points by level loop and closed traverse.

2.1.4 The location of the survey sites shall be shown to the contractor by the Contracting Officer's Representative (COR). The limits of the survey and proposed location of the survey monuments shall then be identified by temporary markers and a sketch, with coordinates, of the area to be surveyed shall be submitted for approval by the COR before proceeding with the survey.

3. Topography Requirements.

3.1 A sufficient quantity of horizontal and vertical control data shall be established to provide a detailed topographic survey with twenty five (25) centimeter contour intervals. Intermediate elevations shall be provided as necessary to show breaks in grade and changes in terrain.

3.1.1 The contours shall accurately express the relief detail and topographic shapes. In addition, 90 percent of the elevations or profiles interpolated from the contours shall be correct to within one-half of the specified contour interval and spot elevations shall be correct within plus or minus three (3) centimeters.

3.1.2 The projection grid (which shall be a metric rectangular coordinate system with a grid spacing of fifty (50) meter intervals) and the control points shall be plotted correctly to the nearest three tenths (0.3) of a millimeter. The horizontal position of 90 percent of definitely recognizable points shall be plotted correctly with reference to the nearest control point within six tenths (0.6) of a millimeter.

3.1.3 Where applicable, spot elevations and or finish floor elevations of structures or facilities shall be provided. Specifically, show all break points or control points in grades of terrain such as tops of hills, top and bottom of curbs, bottoms of ditches and gullies, high bank elevations, etc. Ground elevations shall be read to the closest three (3) centimeters. Road elevations shall be read to the closest three (3) millimeters.

3.1.4 All surface and known sub-surface features, buildings, structures, etc. within the area to be surveyed shall be shown, spot elevations provided and identified on the topographic maps. In addition, these features shall be located by sufficient distance ties and labeled on the topographic sheets to permit accurate scaling and identification.

3.1.5 Manholes and sanitary lines within the survey boundaries shall be located and invert elevations obtained. Water, sanitary, fuel, electrical and mechanical utilities within the survey site shall be located and shown on the survey map. Invert elevations will be on the bottom lip of each pipe in the manhole to include the depth of the manhole must be taken also. Water, sanitary, fuel, electrical and mechanical utilities within the survey site shall be located and shown on the survey map and provided digitally in the database.

ATTACHMENT 2

DIGITAL FORMAT
SURVEY/MAPPING

1. General Design File Requirements:

a. The topographic data for the entire project, shall be compliant according to the A/E/C CADD Standard Manual Version 3.0, which is available at https://cadbim.usace.army.mil/. The data shall be placed into a single Microstation In-Roads V8 or AutoCAD Map 3D Version 2004 file. If the design file exceeds 10 MB, a separate design file consisting of topographic data only shall be prepared and shall be referenced to the primary file.

b. Only the topographic feature data (spot elevations and contours) are required to be placed into 3D design file(s) at their proper elevation. Surface and subsurface features shall be placed in the 3-D file(s) at elevation zero (0).

c. A Digital Terrain Model shall be furnished compatible with Microstation In-Roads V8. A sufficient number of field acquired data points and breaklines are required to generate the contours of the mapping area. Breaklines are to be used to represent abrupt grade breaks such as road centerline, top and bottom of curb, top and bottom of ditch, etc…

d. Design file units shall be:
Master Units: Meters (M)
Subunits: 1000 MM
Positional Units: 10

e. The angle format shall be degrees, minutes, and seconds to one decimal place.

f. All locks, except snap, will be off. All displays will be on except text nodes and curve fast display.

g. All topographic data shall be shown in “Model” space, Any individual sheets shall be shown in “Paper” space.

h. Grid lines shall be placed in the design file at 100 m intervals. Coordinates shall be placed on the grid lines for the datum specified.

i. The level names, line styles, line weights, and line colors shown in Table 2 shall be used. Text shall be in capital letters and appear to be 3 mm when plotted. Include any standards sheets (abbreviations, symbols libraries, font libraries, color tables, pen tables, plot configuration files, user command files, etc.) necessary for a complete project.

j. Each 3-D file shall be checked by viewing a front or side view to detect errors in element elevation.

k. Contractor will not scale drawings to conform to meters. All drawings must be CREATED using meters.

TABLE 2
Survey/Mapping Level Assignments
and Level Symbology

LAYER NAME	DESCRIPTION	LINE STYLES	LINE WEIGHT	LINE COLOR
V-ANNO-DIMS	WITNESS/EXTENSION LINES, DIMENSION TERMINATORS, DIMENSION TEXT	Continuous	0	1
V-ANNO-KEYN	REFERENCE KEYNOTES WITH ASSOCIATED LEADERS	Continuous	0	2
V-ANNO-NPLT	NON-PLOTTING GRAPHIC INFO	Continuous	0	5
V-ANNO-PATT	MISCELLANEOUS PATTERNING AND HATCHING	Continuous	0	8
V-ANNO-NOTE	GENERAL NOTES AND GENERAL REMARKS	Continuous	0	2
V-ANNO-SYMB	MISCELLANEOUS SYMBOLS	Continuous	0	6
V-ANNO-TEXT	MISCELLANEOUS TEXT AND CALLOUTS WITH ASSOCIATED LEADERS	Continuous	0	2
V-ANNO-REFR	REFERENCE FILES	NA	NA	NA
SURVEY LINES				
V-SURV-DATA	SURVEY DATA (BENCHMARKS AND HORIZONTAL CONTROL POINTS OR MONUMENTS)	Continuous	0	6
V-SURV-LINE	SURVEY, BASELINE, AND CONTROL LINE	Long Dash	0	4
V-SURV-IDEN	SURVEY, BASELINE, AND CONTROL LINE ANNOTATOR	Continuous	0	6
BUILDINGS AND STRUCTURES				
V-BLDG-OTLN	BUILDINGS AND OTHER STRUCTURES	Continuous	0	7
V-BLDG-IDEN	BUILDINGS AND OTHER STRUCTURES ANNOTATOR	Continuous	0	2
SITE				
V-SITE-FENC	FENCES AND HANDRAILS	Continuous	0	6
V-SITE-FENCE-IDEN	FENCE, HANDRAIL, RAMP, AND TRAIL ANNOTATION	Continuous	0	6
V-SITE-STRC	STRUCTURES (BRIDGES, SHEDS, FOUNDATION PADS, FOOTINGS, ETC)	Continuous	0	22
V-SITE-IDEN	EXISTING SITE FEATURE/STRUCTURE ANNOTATION	Continuous	0	6
V-SITE-OTLN	EXISTING SITE FEATURES (PLAY STRUCTURES, BIKE RACKS, BENCHES, RECREATIONAL EQUIPMENT)	Continuous	0	4

TABLE 2 (con't)

Survey/Mapping Level Assignments
and Level Symbology

LAYER NAME	DESCRIPTION	LINE STYLES	LINE WEIGHT	LINE COLOR
SITE (con't)				
V-SITE-EROS	RIPRAP, REVETMENTS/STONE PROTECTION, BREAKWATERS, DIKES, JETTIES, AND DRAINS	Continuous	0	1
V-SITE-EWAT	WATER FEATURES	Continuous	0	162
V-SITE-STRS	STAIRS AND RAMPS	Continuous	0	6
V-SITE-WALK	WALKS, TRAILS, AND BICYCLE PATHS	Continuous	0	2
SITE-VEGE	EXISTING TREELINES AND VEGETATOR	Continuous	0	82
UTILITIES				
VIUTIL-SSWR	SANITARY LINES AND MANHOLES	Continuous	0	4
V-UTIL-SSWR-IDEN	SANITARY ANNOTATION	Continuous	0	2
V-UTIL-WATR	WATER LINES, HYDRANTS, TANKS	Continuous	0	4
V-UTIL-WATR-IDEN	WATER ANNOTATION	Continuous	0	2
V-UTIL-NGAS	GAS LINES, FEATURES, AND VALVES	Continuous	0	4
V-UTIL-NGAS-IDEN	GAS ANNOTATION	Continuous	0	2
V-UTIL-STEM	STEAM LINES AND ANNOTATION	Continuous	0	2
V-UTIL-STRM	STORM SEWER LINES, CULVERTS, MANHOLES, AND HEADWALLS	Continuous	0	4
V-UTIL-STRM-IDEN	STORM SEWER ANNOTATION	Continuous	0	2
V-UTIL-ELEC	POWER LINES, LIGHTS, TELEPHONE POLS, COMMUNICATION LINES	Continuous	0	4
V-UTIL-ELEC-IDEN	POWER/COMMUNICATION ANNOTATION	Continuous	0	2
PAVEMENTS/TRANSPORTATION				
V-PVMT-ROAD	ROADS, PARKING LOTS, RAILROADS, AIRFIELD PAVEMENTS	Continuous	0	2
V-PVMT-IDEN	ROAD, PARKING LOT, RAILROAD, AIRFIELD PAVEMENT ANNOTATION	Continuous	0	2

TABLE 2 (con't)

Survey/Mapping Level Assignments
and Level Symbology

LAYER NAME	DESCRIPTION	LINE STYLES	LINE WEIGHT	LINE COLOR
PAVEMENTS/TRANSPORTATION (con't)				
V-PVMT-PATT	JOINT PATTERNS, TEXT, AND DIMENSIONS	Continuous	0	2
V-PVMT-MRKG	PAVEMENT MARKINGS AND SIGNS	Continuous	0	2
TOPOGRAPHY				
V-TOPO-DTCH	DITCHES AND SWALES	Continuous	0	3
V-TOPO-BORE	BORING LOCATIONS	Continuous	0	6
V-TOPO-COOR	COORDINATE GRID TICKS AND TEXT	Continuous	0	122
V-TOPO-MAJR-IDEN	MAJOR CONTOURS ANNOTATION	Continuous	0	2
V-TOPO-MAJR	MAJOR CONTOURS	Continuous	0	2
V-TOPO-MINR-IDEN	MINOR CONTOURS ANNOTATION	Continuous	0	3
V-TOPO-MINR	MINOR CONTOURS	Continuous	0	3
V-TOPO-SPOT	SPOT ELEVATIONS	Continuous	0	2
V-TOPO-SLOP-TOPT	TOP/TOE SLOPES	Continuous	0	6
V-TOPO-BKLN	BREAKLINES	Centerline	0	7
V-TOPO-DTMT	DTM TRIANGLES	Continuous	0	22
V-TOPO-DTMP	DTM POINTS	Continuous	0	6

SECTION 31 00 00

EARTHWORK

PART 1 GENERAL

1.1 REFERENCES

The publications listed below form a part of this specification to the extent referenced. The publications are referred to within the text by the basic designation only.

AMERICAN WATER WORKS ASSOCIATION(AWWA)

AWWA C600	(2005) Installation of Ductile-Iron Water Mains and Their Appurtenances

AMERICAN WELDING SOCIETY (AWS)

AWS D1.1/D1.1M	(2006) Structural Welding Code - Steel

ASTM INTERNATIONAL (ASTM)

ASTM A 139	(2000) Electric-Fusion (Arc)-Welded Steel Pipe (NPS 4 and Over)
ASTM B 117	(2002) Operating Salt Spray (Fog) Apparatus
ASTM C 117	(2004) Materials Finer Than 75 micrometer (No. 200) Sieve in Mineral Aggregates by Washing
ASTM C 136	(2005) Sieve Analysis of Fine and Coarse Aggregates
ASTM D 1140	(2000) Amount of Material in Soils Finer than the No. 200 (75-micrometer) Sieve
ASTM D 149	(1997a; R 2004) Dielectric Breakdown Voltage and Dielectric Strength of Solid Electrical Insulating Materials at Commercial Power Frequencies
ASTM D 1556	(2000) Density and Unit Weight of Soil in Place by the Sand-Cone Method
ASTM D 1557	(2002e1) Laboratory Compaction Characteristics of Soil Using Modified Effort (56,000 ft-lbf/cu. ft. (2,700 kN-m/cu.m.))
ASTM D 2216	(1998) Laboratory Determination of Water (Moisture) Content of Soil and Rock by Mass
ASTM D 2240	(2004) Rubber Property - Durometer Hardness
ASTM D 2487	(2000) Soils for Engineering Purposes

	(Unified Soil Classification System)
ASTM D 6938	In-Place Density and Water Content of Soil-Aggregate By Nuclear Methods (Shallow) Depth)
ASTM D 422	(1963; R 2002) Particle-Size Analysis of Soils
ASTM D 4318	(2000) Liquid Limit, Plastic Limit, and Plasticity Index of Soils
ASTM D 638	(2003) Tensile Properties of Plastics
ASTM D 695	(2002a) Compressive Properties of Rigid Plastics
ASTM D 785	(2003) Rockwell Hardness of Plastics and Electrical Insulating Materials
ASTM D 790	(2003) Flexural Properties of Unreinforced and Reinforced Plastics and Electrical Insulating Materials
ASTM E 11	(2004) Wire Cloth and Sieves for Testing Purposes

BRITISH STANDARDS INSTITUTE (BSI)

BS 812-118	(1988) Testing Aggregates Part 118: Method for Determination of Sulphate Content

1.2 DEFINITIONS

1.2.1 Satisfactory Materials

Materials classified in ASTM D 2487 using ASTM D 422, ASTM D 1140, ASTM C 136, ASTM C 117 and ASTM D 4318 as GW, GP, GM, SP, and SW are satisfactory. GC, SC, ML, and CL are satisfactory when natural (not man-made) and in-situ, and when properly moisture conditioned and compacted, may be used for fill and backfill upon approval by the Contracting Officer. The plasticity index shall be less than 12 and the liquid limit shall be less than 35. Particles shall not be larger than 76 mm (3 inches) in any dimension, with 70 percent to 100 percent passing the 19 mm (3/4 inch) sieve. Not more than 25 percent by weight shall pass the 0.075 mm (No. 200) sieve. Sieves shall conform to ASTM E 11.

1.2.2 Unsatisfactory Materials

Materials which do not comply with the requirements for satisfactory materials are unsatisfactory. Unsatisfactory materials also include man-made fills; trash; refuse; backfills from previous construction; cobbles; boulders; rock; lenses or pockets of gypsum; gypsiferous soils; expansive soils; and material classified as satisfactory which contains root and other organic matter or frozen material. SC and GC are unsatisfactory when more than 25 percent of the material passes the 0.075 mm sieve. The Contracting Officer shall be notified immediately of any contaminated materials. Unsatisfactory materials also include those materials listed in paragraph SATISFACTORY MATERIALS if they are

determined by the Contracting Officer to be in a saturated, dry, uncompacted, disturbed, or otherwise unacceptable condition at the time of construction.

1.2.3 Cohesionless and Cohesive Materials

Cohesionless materials include materials classified in ASTM D 2487 as GW, GP, SW, and SP. Cohesive materials include materials classified as GC, SC, ML, CL, MH, and CH. Materials classified as GM and SM will be identified as cohesionless only when the fines are nonplastic. Perform testing, required for classifying materials, in accordance with ASTM D 4318, ASTM C 117, ASTM C 136, ASTM D 422, and ASTM D 1140.

1.2.4 Degree of Compaction

Degree of compaction required is expressed as a percentage of the maximum density obtained by the test procedure presented in ASTM D 1557 Method C abbreviated as a percent of laboratory maximum density.

1.2.5 Hard/Unyielding Materials

Hard/Unyielding materials comprise weathered rock, dense consolidated deposits, or conglomerate materials which are not included materials with stones greater than 75 mm in any dimension or as defined by the pipe manufacturer, whichever is smaller. These materials usually require the use of heavy excavation equipment, ripper teeth, or jack hammers for removal.

1.2.6 Rock

Solid homogeneous interlocking crystalline material with firmly cemented, laminated, or foliated masses or conglomerate deposits, neither of which can be removed without systematic drilling and blasting, drilling and the use of expansion jacks or feather wedges, or the use of backhoe-mounted pneumatic hole punchers or rock breakers; also large boulders, buried masonry, or concrete other than pavement exceeding 0.375 cubic meter in volume. Removal of hard material will not be considered rock excavation because of intermittent drilling and blasting that is performed merely to increase production.

1.2.7 Unstable Material

Unstable material are too wet to properly support the utility pipe, conduit, or appurtenant structure.

1.2.8 Select Granular Material

1.2.8.1 General Requirements

Select granular material consist of materials classified as GW, GP, SW, or SP by ASTM D 2487 where indicated. The liquid limit of such material must not exceed 25 percent when tested in accordance with ASTM D 4318. The plasticity index must not be greater than 5 percent when tested in accordance with ASTM D 4318, and not more than 25 percent by weight may be finer than 75 micrometers sieve when tested in accordance with ASTM D 1140.

1.2.9 Initial Backfill Material

Initial backfill consists of select granular material or satisfactory

materials free from rocks 12 mm or larger in any dimension of such size as recommended by the pipe manufacturer, whichever is smaller.

1.2.10 Expansive Soils

Expansive soils are defined as soils that have a plasticity index equal to or greater than 25 when tested in accordance with ASTM D 4318.

1.2.11 Gypsiferous Soils

Gypsiferous soils are those found to contain 10 percent or more gypsum as determined by visual inspection. If there is disagreeement with the classification by visual inspection, the following test shall apply. A 1000 gram sample shall be heated to 110 degreee centigrade for 24 hours. At this point the sample will be broken apart. The gypsum can be identified by its white color. The gypsum content can be determined by weight from a chemical analysis performed in accordance with BS 812-118, if necessary, to establish exact quantities. All testing will be done at the expense of the Contractor.

1.3 SUBMITTALS

Government approval is required for submittals with a "G" designation; submittals not having a "G" designation are for information only. When used, a designation following the "G" designation identifies the office that will review the submittal for the Government. Submit the following in accordance with Section 01 33 00 SUBMITTAL PROCEDURES:

SD-06 Test Reports

Testing

Within 24 hours of conclusion of physical tests, two (2) copies of test results, including calibration curves and results of calibration tests. Results of testing at the borrow site.

SD-07 Certificates

Testing

Qualifications of the Corps validated commercial testing laboratory or the Contractor's validated testing facilities.

1.4 BLASTING

Blasting is not permitted.

1.5 SUBSURFACE DATA

No site-specific geotechnical information is available. Site specific geotechnical information necessary to design and construct the foundations, pavements and other geotechnically related items contained in this project shall be the Contractor's responsibility.

PART 2 PRODUCTS

2.1 BURIED WARNING AND IDENTIFICATION TAPE

Provide metallic core or metallic-faced, acid- and alkali-resistant,

polyethylene plastic warning tape manufactured specifically for warning and identification of buried utility lines. Provide tape on rolls, 75 mm minimum width, color coded as specified below for the intended utility with warning and identification imprinted in bold black letters continuously over the entire tape length. Warning and identification to read, "CAUTION, BURIED (intended service) LINE BELOW" or similar wording. Provide permanent color and printing, unaffected by moisture or soil.

Warning Tape Color Codes

Red:	Electric
Yellow:	Gas, Oil; Dangerous Materials
Orange:	Telephone and Other Communications
Blue:	Water Systems
Green:	Sewer Systems
White:	Steam Systems
Gray:	Compressed Air

2.1.1 Detectable Warning Tape

Provide acid and alkai-resistant polyethylene plastic tape conforming to the width, color, and printing requirements specified above, with a minimum thickness of 0.10 mm, and a minimum strength of 10.3 MPa lengthwise and 8.6 MPa crosswise. Manufacture tape with integral wires, foil backing, or other means of enabling detection by a metal detector when tape is buried up to 920 mm deep. Encase metallic element of the tape in a protective jacket or provide with other means of corrosion protection.

2.2 PIPE CASING

2.2.1 CASING PIPE

Casing pipe shall be a smooth steel pipe conforming to ASTM A 139, Grade B. The minimum yield point of smooth steel casing pipe shall be 240 MPa (35,000 psi). The minimum wall thickness of the casing pipe shall not be less than 6.3 mm (0.25-inches). The ends of smooth steel casing pipe shall be beveled for field welding.

2.2.2 CARRIER PIPE

The carrier pipe shall be the same nominal diameter as the system main on either side of the casing pipe. Pipe shall be ductile iron and have restrained joints.

2.2.3 Casing Spacers

Casing spacers shall consist of two or more segments of circular steel that bolt together forming a shell around the carrier pipe. Casing spacers should protect the carrier pipe and any protective coating or wrapping from damage during the installation, and properly support and electrically isolate the carrier pipe within the casing.

2.2.3.1 Spacer Dimensions

Casing spacers shall be 200 mm (8 inches) long for carrier pipes up to 450 mm (16-inch) diameters and 300 mm (12 inches) long for larger carrier pipe sizes.

2.2.3.2 Spacer Material

Casing spacers shall have a minimum 1.88 mm (14-gauge) 304 stainless steel band and 0.135 mm (10 gauge) 304 stainless steel riser. The band, risers and connecting studs shall be welded and cleaned at the factory before the application of a fluidized bed fusion bonded PVC coating. Stainless steel (type 304) casing spacer is an acceptable alternative.

2.2.3.3 Coatings

The fluidized bed fusion bonded PVC coating shall be between 0.25- 0.40 mm (10-16 mils) thickness. The PVC coating shall provide good resistance to acids and alkalize and excellent resistance under ASTM B 117 salt spray tests. The coating shall have a minimum 1380volts/mil per ASTM D 149 short time 0.010" test and a Durometer "A" @ (10 sec) of 80 per ASTM D 2240. Epoxy coatings are not an acceptable alternative.

2.2.3.4 Spacer Liners

The spacers shall have a flexible PVC liner of 2.29mm (0.09-inch) thickness with Durometer "A" 85-90 hardness and a minimum 58,000- volt dielectric strength (60,000-volt minimum Surge Test.) Moisture absorption shall not exceed 1%.

2.2.3.5 Runners

The runners shall be of high pressure molded glass reinforced polyester with a minimum compressive strength of 18,000 psi per ASTM D 695, flexural strength of 25,300 kg/cm2 (25,300 psi) per ASTM D 790, tensile strength of 1,237 kg/cm2 (17,600 psi) per ASTM D 638 and Rockwell hardness (M) of 90 per ASTM D 785. The riser shall be designed and fabricated to place the runner (skid) in full contact with the inside surface of the casing pipe. This evenly distributes the load force to all support members. The ends of all runners shall be shaped to resist hanging or sticking inside casing during installation of the carrier pipe. Polyethylene runners are not acceptable.

2.2.3.6 Runner Material

Runners shall be a minimum of 50 mm (2.0 inch) in width and a minimum of 175 mm (7 inches) long for carrier pipes up to 400 mm (16 inches). Bolts on runners are not acceptable. The runners shall be attached to the band or riser by 3/8 the wearing surface on the runner. The recess shall be filled with a corrosion inhibiting filler. There shall be four runners per casing spacer for carrier pipes up to 300 mm (12-inches) diameter. The runners can be glass reinforced plastic or nylon, or ultra high molecular weight polymer.

2.2.3.7 Band Section

The band section shall be bolted together with 7.9 mm (5/16-inch) 304 stainless steel studs, nuts and washers. There shall be six sets per 200 mm (8-inch) long casing spacer.

2.2.3.8 Spacer Position

Casing spacers shall be in a centered restrained position configuration in the casing pipe. Casing spacers shall have ample riser height to limit vertical movement of the carrier pipe in the casing. A minimum of 25 to 50

mm (1 to 2 inches) clearance shall be provided between the top runner and the ID of the casing or tunnel.

PART 3 EXECUTION

3.1 GENERAL EXCAVATION

Perform excavation of every type of material encountered within the limits of the project to the lines, grades, and elevations indicated and as specified. Perform the grading in accordance with the typical sections shown and the tolerances specified in paragraph FINISHING. Transport satisfactory excavated materials and place in fill or embankment within the limits of the work. Excavate unsatisfactory materials encountered within the limits of the work below grade and replace with satisfactory materials as directed. Include such excavated material and the satisfactory material ordered as replacement in excavation. Disposal of surplus satisfactory material and unsatisfactory material shall be outside the limits of the project site and is the Contractor's responsibility. It is the Contractor's responsibility to coordinate with the local Government or authorities the location and the time of disposal. During construction, perform excavation and fill in a manner and sequence that will provide proper drainage at all times. Obtaining borrow and/or fill material is the responsibility of the Contractor.

3.1.1 Ditches, Gutters, and Channel Changes

Finish excavation of ditches, gutters, and channel changes by cutting accurately to the cross sections, grades, and elevations shown on drawing. Do not excavate ditches and gutters below grades shown. Backfill the excessive open ditch or gutter excavation with satisfactory, thoroughly compacted, material or with suitable stone or cobble to grades shown. Dispose excavated material, except in no case allow material be deposited a maximum 1 meter from edge of a ditch. Maintain excavations free from detrimental quantities of leaves, brush, sticks, trash, and other debris until final acceptance of the work.

3.1.2 Drainage Structures

Make excavations to the lines, grades, and elevations shown, or as directed. Provide trenches and foundation pits of sufficient size to permit the placement and removal of forms for the full length and width of structure footings and foundations as shown. Clean rock or other hard foundation material of loose debris and cut to a firm, level, stepped, or serrated surface. Remove loose disintegrated rock and thin strata. Do not disturb the bottom of the excavation when concrete is to be placed in an excavated area. Do not excavate to the final grade level until just before the concrete is to be placed.

3.1.3 Drainage

Provide for the collection and disposal of surface and subsurface water encountered during construction. Completely drain construction site during periods of construction to keep soil materials sufficiently dry. Construct storm drainage features (ponds/basins) at the earliest stages of site development, and throughout construction grade the construction area to provide positive surface water runoff away from the construction activity and/or provide temporary ditches, swales, and other drainage features and equipment as required to maintain dry soils. When unsuitable working platforms for equipment operation and unsuitable soil support for

subsequent construction features develop, remove unsuitable material and provide new soil material as specified herein. It is the responsibility of the Contractor to assess the soil and ground water conditions presented by the plans and specifications and to employ necessary measures to permit construction to proceed.

3.1.4 Dewatering

Control groundwater flowing toward or into excavations to prevent sloughing of excavation slopes and walls, boils, uplift and heave in the excavation and to eliminate interference with orderly progress of construction. Do not permit French drains, sumps, ditches or trenches within 0.9 m of the foundation of any structure, except with specific written approval, and after specific contractual provisions for restoration of the foundation area have been made. Take control measures by the time the excavation reaches the water level in order to maintain the integrity of the in situ material. Operate dewatering system continuously until construction work below existing water levels is complete. Submit performance records weekly.

3.1.5 Trench Excavation Requirements

Excavate the trench as recommended by the manufacturer of the pipe to be installed. Slope trench walls below the top of the pipe, or make vertical, and of such width as recommended in the manufacturer's printed installation manual. Provide vertical trench walls where no manufacturer's printed installation manual is available. Shore trench walls more than 1 meters high, cut back to a stable slope, or provide with equivalent means of protection for employees who may be exposed to moving ground or cave in. Shore vertical trench walls more than 1 meters high. Excavate trench walls which are cut back to at least the angle of repose of the soil. Give special attention to slopes which may be adversely affected by weather or moisture content. Do not exceed the trench width below the pipe top of 600 mm plus pipe outside diameter (O.D.) for pipes of less than 600 mm inside diameter, and do not exceed 900 mm plus pipe outside diameter for sizes larger than 600 mm inside diameter. Where recommended trench widths are exceeded, provide redesign, stronger pipe, or special installation procedures by the Contractor. The Contractor is responsible for the cost of redesign, stronger pipe, or special installation procedures without any additional cost to the Government.

3.1.5.1 Bottom Preparation

Grade the bottoms of trenches accurately to provide uniform bearing and support for the bottom quadrant of each section of the pipe. Excavate bell holes to the necessary size at each joint or coupling to eliminate point bearing. Remove stones of 75 mm or greater in any dimension, or as recommended by the pipe manufacturer, whichever is smaller, to avoid point bearing.

3.1.5.2 Removal of Unyielding Material

Where unyielding material is encountered in the bottom of the trench, remove such material 150 mm below the required grade and replaced with suitable materials as provided in paragraph BACKFILLING AND COMPACTION.

3.1.5.3 Removal of Unstable Material

Where unstable material is encountered in the bottom of the trench, remove such material to the depth directed and replace it to the proper grade with

select granular material as provided in paragraph BACKFILLING AND COMPACTION. When removal of unstable material is required due to the Contractor's fault or neglect in performing the work, the Contractor is responsible for excavating the resulting material and replacing it without additional cost to the Government.

3.1.5.4 Excavation for Appurtenances

Provide excavation for manholes, catch-basins, inlets, or similar structures of sufficient size to permit the placement and removal of forms for the full length and width of structure footings and foundations as shown. Clean rock of loose debris and cut to a firm surface either level, stepped, or serrated, as shown or as directed. Remove loose disintegrated rock and thin strata. Specify removal of unstable material. When concrete or masonry is to be placed in an excavated area, take special care not to disturb the bottom of the excavation. Do not excavate to the final grade level until just before the concrete or masonry is to be placed.

3.1.5.5 Jacking, Boring, and Tunneling

Unless otherwise indicated, provide excavation by open cut except that sections of a trench may be jacked, bored, or tunneled if, in the opinion of the Contracting Officer, the pipe, cable, or duct can be safely and properly installed and backfill can be properly compacted in such sections.

3.1.6 Structural Excavation

Ensure that footing subgrades have been inspected and approved by the Contracting Officer prior to concrete placement. Backfill and compact over excavations and changes in grade due to pile driving operations to 90 percent of ASTM D 1557 maximum density.

3.2 SELECTION OF BORROW MATERIAL

Select borrow material to meet the requirements and conditions of the particular fill or embankment for which it is to be used is the Contractor's responsibility. The Contractor is responsible for obtaining the right to procure material, pay royalties and other charges involved, and bear the expense of developing the sources, including rights-of-way for hauling from the owners.

3.3 GRADING AREAS

Where indicated, divide work into grading areas within which satisfactory excavated material will be placed in embankments, fills, and required backfills. Do not haul satisfactory material excavated in one grading area to another grading area except when so directed in writing. Place and grade stockpiles of satisfactory and unsatisfactory as specified. Keep stockpiles in a neat and well drained condition, giving due consideration to drainage at all times. Clear, grub, and seal by rubber-tired equipment, the ground surface at stockpile locations; separately stockpile excavated satisfactory and unsatisfactory materials. Protect stockpiles of satisfactory materials from contamination which may destroy the quality and fitness of the stockpiled material. If the Contractor fails to protect the stockpiles, and any material becomes unsatisfactory, remove and replace such material with satisfactory material from approved sources.

3.4 FINAL GRADE OF SURFACES TO SUPPORT CONCRETE

Do not excavate to final grade until just before concrete is to be placed. For pile foundations, stop the excavation at an elevation of from 150 to 300 mm above the bottom of the footing before driving piles. After pile driving has been completed, complete the remainder of the excavation to the elevations shown. Only use excavation methods that will leave the foundation rock in a solid and unshattered condition. Roughen the level surfaces, and cut the sloped surfaces, as indicated, into rough steps or benches to provide a satisfactory bond. Protect shales from slaking and all surfaces from erosion resulting from ponding or water flow.

3.5 GROUND SURFACE PREPARATION

3.5.1 General Requirements

Remove and replace unsatisfactory material with satisfactory materials, as directed by the Contracting Officer, in surfaces to receive fill or in excavated areas. Scarify the surface to a depth of 150 mm before the fill is started. Plow, step, bench, or break up sloped surfaces steeper than 1 vertical to 4 horizontal so that the fill material will bond with the existing material. When subgrades are less than the specified density, break up the ground surface to a minimum depth of 150 mm, pulverizing, and compacting to the specified density. When the subgrade is part fill and part excavation or natural ground, scarify the excavated or natural ground portion to a depth of 300 mm and compact it as specified for the adjacent fill.

3.5.2 Frozen Material

Do not place material on surfaces that are muddy, frozen, or contain frost. Finish compaction by sheepsfoot rollers, pneumatic-tired rollers, steel-wheeled rollers, or other approved equipment well suited to the soil being compacted.

3.6 UTILIZATION OF EXCAVATED MATERIALS

The Contractor is responsibility for removal and disposal of unsatisfactory material. Use satisfactory material removed from excavations, insofar as practicable, in the construction of fills, embankments, subgrades, shoulders, bedding (as backfill), and for similar purposes. Do not waste any satisfactory excavated material without specific written authorization. Disposal of satisfactory material is the Contractor's responsibility.

3.7 BURIED TAPE AND DETECTION WIRE

3.7.1 Buried Warning and Identification Tape

Provide buried utility lines with utility identification tape. Bury tape 300 mm below finished grade; under pavements and slabs, bury tape 150 mm below top of subgrade.

3.7.2 Buried Detection Wire

Bury detection wire directly above non-metallic piping at a distance not to exceed 300 mm above the top of pipe. Extend the wire continuously and unbroken, from manhole to manhole. Terminate the ends of the wire inside the manholes at each end of the pipe, with a minimum of 0.9 m of wire,

coiled, remaining accessible in each manhole. Furnish insulated wire over it's entire length. Install wires at manholes between the top of the corbel and the frame, and extend up through the chimney seal between the frame and the chimney seal. For force mains, terminate the wire in the valve pit at the pump station end of the pipe.

3.8 BACKFILLING AND COMPACTION

Place backfill adjacent to any and all types of structures, and compact to at least 95 percent laboratory maximum density to prevent wedging action or eccentric loading upon or against the structure. Prepare ground surface on which backfill is to be placed as specified in paragraph SURFACE PREPARATION. Provide compaction requirements for backfill materials in conformance with the applicable portions of paragraphs GROUND SURFACE PREPARATION. Finish compaction by sheepsfoot rollers, pneumatic-tired rollers, steel-wheeled rollers, vibratory compactors, or other approved equipment.

3.8.1 Trench Backfill

Backfill the trench to 0.6 meters above the top of pipe prior to performing the required pressure tests. Leave the joints and couplings uncovered during the pressure test. Do not backfill the trench until all specified tests are performed. Backfill trenches to the grade shown.

3.8.1.1 Replacement of Unyielding Material

Replace unyielding material removed from the bottom of the trench with select granular material or initial backfill material.

3.8.1.2 Replacement of Unstable Material

Replace unstable material removed from the bottom of the trench or excavation with select granular material placed in layers not exceeding 150 mm loose thickness.

3.8.1.3 Bedding and Initial Backfill

Place initial backfill material and compact it with approved tampers to a height of at least 300 mm above the utility pipe or conduit. Bring up the backfill evenly on both sides of the pipe for the full length of the pipe. Take care to ensure thorough compaction of the fill under the haunches of the pipe. Except as specified otherwise in the individual piping section, provide bedding for buried piping in accordance with AWWA C600, Type 4, except as specified herein. Compact backfill to top of pipe to 90 percent of ASTM D 1557 maximum density.

3.8.1.4 Final Backfill

Fill the remainder of the trench, except for special materials for roadways and airfields, with satisfactory material. Place backfill material and compact as follows:

a. Roadways and Airfields: Deposit backfill in layers of a maximum of 300 mm loose thickness, and compact it to 95 percent maximum density.

Do not permit water flooding or jetting methods of compaction.

b. Sidewalks, Turfed or Seeded Areas and Miscellaneous Areas: Deposit backfill in layers of a maximum of 300 mm loose thickness, and compact it to 90 percent maximum density. Do not permit compaction by water flooding or jetting. Apply this requirement to all other areas not specifically designated above.

3.8.2 Backfill for Appurtenances

After the manhole, catchbasin, inlet, or similar structure has been constructed and the concrete has been allowed to cure for 14 days, place backfill in such a manner that the structure is not be damaged by the shock of falling earth. Deposit the backfill material, compact it as specified for final backfill, and bring up the backfill evenly on all sides of the structure to prevent eccentric loading and excessive stress.

3.9 SPECIAL REQUIREMENTS

Special requirements for both excavation and backfill relating to the specific utilities are as follows:

3.9.1 Water Lines

Excavate trenches to a depth that provides a minimum cover of 0.9 meters from the existing ground surface, or from the indicated finished grade, whichever is lower, to the top of the pipe.

3.9.2 Electrical Distribution System

Provide a minimum cover of 600 mm from the finished grade to direct burial cable and conduit or duct line, unless otherwise indicated.

3.9.3 Pipeline Casing

Provide new smooth wall steel pipeline casing under new or existing pavement by the boring and jacking method of installation. Provide each new pipeline casing, where indicated and to the lengths and dimensions shown, complete and suitable for use with the new piped utility as indicated.

3.9.3.1 Bore Holes

Mechanically bore holes and case through the soil with a cutting head on a continuous auger mounted inside the casing pipe. Weld lengths of pipe together in accordance with AWS D1.1/D1.1M. Do not use water or other fluids in connection with the boring operation.

3.9.3.2 Cleaning

Clean inside of the pipeline casing of dirt, weld splatters, and other foreign matter which would interfere with insertion of the piped utilities by attaching a pipe cleaning plug to the boring rig and passing it through the pipe.

3.9.3.3 End Seals

After installation of piped utilities in pipeline casing, provide watertight end seals at each end of pipeline casing between pipeline casing and piping utilities. Provide watertight segmented elastomeric end seals.

3.10 EMBANKMENTS

3.10.1 Earth Embankments

Construct earth embankments from satisfactory materials free of organic or frozen material and rocks with any dimension greater than 75 mm. Place the material in successive horizontal layers of loose material not more than 200 mm in depth. Spread each layer uniformly on a soil surface that has been moistened or aerated as necessary, and scarified or otherwise broken up so that the fill will bond with the surface on which it is placed. After spreading, plow, disk, or otherwise brake up each layer; moisten or aerate as necessary; thoroughly mix; and compact to at least 95 percent laboratory maximum density. Compaction requirements for the upper portion of earth embankments forming subgrade for pavements are identical with those requirements specified in paragraph SUBGRADE PREPARATION. Finish compaction by sheepsfoot rollers, pneumatic-tired rollers, steel-wheeled rollers, vibratory compactors, or other approved equipment.

3.11 SUBGRADE PREPARATION

3.11.1 Construction

Shape subgrade to line, grade, and cross section, and compact as specified. Include plowing, disking, and any moistening or aerating required to obtain specified compaction for this operation. Remove soft or otherwise unsatisfactory material and replace with satisfactory excavated material or other approved material as directed. Excavate rock encountered in the cut section to a depth of 150 mm below finished grade for the subgrade. Bring up low areas resulting from removal of unsatisfactory material or excavation of rock to required grade with satisfactory materials, and shape the entire subgrade to line, grade, and cross section and compact as specified. After rolling, do not show deviations for the surface of the subgrade for roadways and airfields greater than 13 mm when tested with a 4 m straightedge applied both parallel and at right angles to the centerline of the area. Do not vary the elevation of the finish subgrade more than 15 mm from the established grade and cross section.

3.11.2 Required Compaction and Moisture Content

The required degree of compaction is 95 percent of maximum density as determined by ASTM D 1557 unless otherwise stated within this specification or on the drawings. The required moisture content at time and location of compaction shall be uniform throughout the material and within plus 2 and minus 1 percent of optimum moisture as determined by ASTM D 1557. Water shall be added to the stockpile or the borrow area and adjusted, if necessary in each layer. Brine water, brackish ground water, sea water, sewer effluent, or otherwise unsatisfactory water is not permitted.

3.12 FINISHING

Finish the surface of excavations, embankments, and subgrades to a smooth and compact surface in accordance with the lines, grades, and cross sections or elevations shown. Provide the degree of finish for graded areas within 30 mm of the grades and elevations indicated except that the degree of finish for subgrades specified in paragraph SUBGRADE PREPARATION. Finish gutters and ditches in a manner that will result in effective drainage. Finish the surface of areas to be turfed from settlement or washing to a smoothness suitable for the application of turfing materials. Repair graded, topsoiled, or backfilled areas prior to

acceptance of the work, and re-established grades to the required elevations and slopes.

3.12.1 Subgrade and Embankments

During construction, keep embankments and excavations shaped and drained. Maintain ditches and drains along subgrade to drain effectively at all times. Do no disturb the finished subgrade by traffic or other operation. The Contractor is responsible for protecting and maintaining the finsihed subgrade in a satisfactory condition until ballast, subbase, base, or pavement is placed. Do not permit the storage or stockpiling of materials on the finished subgrade. Do not lay subbase, base course, ballast, or pavement until the subgrade has been checked and approved, and in no case place subbase, base, surfacing, pavement, or ballast on a muddy, spongy, or frozen subgrade.

3.12.2 Grading Around Structures

Construct areas within 1.5 m outside of each building and structure line true-to-grade, shape to drain, and maintain free of trash and debris until final inspection has been completed and the work has been accepted.

3.13 TESTING

Testing shall be the responsibility of the Contractor and shall be performed by an approved commercial testing laboratory or by the Contractor subject to approval. If the Contractor elects to establish testing facilities, no work requiring testing will be permitted until the Contractor's facilities have been inspected and approved by the Contracting Officer. Field in-place density shall be determined in accordance with ASTM D 1556 and ASTM D 6938. When ASTM D 6938 is used, the calibration curves shall be checked and adjusted using only the sand cone method as described in ASTM D 1556. The calibration checks of both the density and moisture gauges shall be made at the beginning of a job on each different type of material encountered and at intervals as directed by the Contracting Officer. When test results indicate, as determined by the Contracting Officer, that compaction is not as specified, the material shall be removed, replaced and recompacted to meet specification requirements at no additional expense to the Government. Tests on recompacted areas shall be performed to determine conformance with specification requirements. The following number of tests, if performed at the appropriate time, will be the minimum acceptable for each type operation.

3.13.1 Material Classification

One (1) test per 1150 cubic meters (1500 cubic yards) stockpiled, borrow, or in-situ material. Classification of the material shall be determined in accordance with ASTM D 2487 using ASTM D 422, ASTM D 1140 and ASTM D 4318.

3.13.2 In-Place Densities

a. One test per 185 square meters (2000 square feet), or fraction thereof, of each lift of fill or backfill for paved areas shall be performed.

b. One test per 100 linear meters (330 linear feet) or fraction thereof, of each lift of excavated trench of embankment or backfill in areas to be paved shall be performed.

c. One test per 350 square meters (3700 square feet), or fraction thereof, of each lift of fill or backfill for unpaved areas shall be performed.

d. One test per 200 linear meters (600 linear feet), or fraction thereof, of each lift of excavated trench in unpaved areas shall be performed.

3.13.3 Moisture Contents

In the stockpile, excavation, or borrow areas, a minimum of two tests per day per type of material or source of material being placed during stable weather conditions shall be performed in accordance with ASTM D 2216. During unstable weather, tests shall be made as dictated by local conditions and approved by the Contracting Officer.

3.13.4 Optimum Moisture and Laboratory Maximum Density

Tests shall be made for each type material or source of material including borrow material to determine the optimum moisture and laboratory maximum density values in accordance with ASTM D 1557. One representative test per 1150 cubic meters (1500 cubic yards) of fill and backfill, or when any change in material occurs which may affect the optimum moisture content or laboratory maximum density.

3.13.5 Tolerance Tests for Subgrades

Continuous checks on the degree of finish specified in Paragraph "Subgrade Preparation" shall be made during construction.

3.14 SUBGRADE AND EMBANKMENT PROTECTION

During construction, embankments and excavations shall be kept shaped and drained. Ditches and drains along subgrade shall be maintained to drain effectively at all times. The finished subgrade shall not be disturbed by traffic or other operation and shall be protected and maintained by the Contractor in a satisfactory condition until, subbase, base, or pavement is placed. The storage or stockpiling of materials on the finished subgrade will not be permitted. No subbase, base course, or pavement shall be laid until the subgrade has been checked and approved, and in no case shall subbase, base, surfacing, or pavement be placed on a muddy or spongy subgrade.

3.15 CONTRACTOR QUALITY CONTROL PERSONNEL

A minimum of one person from the Contractor Quality Control staff shall be dedicated full-time to the execution requirements of this specification. This person shall have over five (5) years of experience in earthwork construction activities similar to that of this project.

-- End of Section --

SECTION 32 11 23

GRADED-CRUSHED AGGREGATE BASE COURSE

PART 1 GENERAL

1.1 REFERENCES

The publications listed below form a part of this specification to the extent referenced. The publications are referred to in the text by basic designation only.

ASTM INTERNATIONAL (ASTM)

ASTM C 117	(2004) Materials Finer Than 75 micrometer (No. 200) Sieve in Mineral Aggregates by Washing
ASTM C 127	(2004) Density, Relative Density (Specific Gravity), and Absorption of Coarse Aggregate
ASTM C 128	(2004a) Density, Relative Density (Specific Gravity), and Absorption of Fine Aggregate
ASTM C 131	(2003) Resistance to Degradation of Small-Size Coarse Aggregate by Abrasion and Impact in the Los Angeles Machine
ASTM C 136	(2005) Sieve Analysis of Fine and Coarse Aggregates
ASTM C 88	(2005) Soundness of Aggregates by Use of Sodium Sulfate or Magnesium Sulfate
ASTM D 1556	(2000) Density and Unit Weight of Soil in Place by the Sand-Cone Method
ASTM D 1557	(2002e1) Laboratory Compaction Characteristics of Soil Using Modified Effort (56,000 ft-lbf/cu. ft. (2,700 kN-m/cu.m.))
ASTM D 2487	(2000) Soils for Engineering Purposes (Unified Soil Classification System)
ASTM D 4318	(2000) Liquid Limit, Plastic Limit, and Plasticity Index of Soils
ASTM D 6938	In-Place Density and Water Content of Soil-Aggregate By Nuclear Methods (Shallow) Depth)
ASTM D 75	(2003) Sampling Aggregates

ASTM E 11 (2004) Wire Cloth and Sieves for Testing Purposes

1.2 DEFINITIONS

For the purposes of this specification, the following definitions apply.

1.2.1 (Not Used)

1.2.2 Graded-Crushed Aggregate Base Course

Graded-crushed aggregate (GCA) base course is well graded, crushed, durable aggregate uniformly moistened and mechanically stabilized by compaction.

1.2.3 Degree of Compaction

Degree of compaction required is expressed as a percentage of the maximum laboratory dry density obtained by the test procedure presented in ASTM D 1557, Method C, abbreviated as a percent of laboratory maximum dry density.

1.3 SUBMITTALS

Government approval is required for submittals with a "G" designation; submittals not having a "G" designation are for information only. When used, a designation following the "G" designation identifies the office that will review the submittal for the Government. The following shall be submitted in accordance with Section 01 33 00 SUBMITTAL PROCEDURES:

SD-03 Product Data

Plant, Equipment, and Tools

List of proposed equipment to be used in performance of construction work, including descriptive data.

Waybills and Delivery Tickets

Copies of waybills and delivery tickets during the progress of the work.

SD-06 Test Reports

Sampling and Testing; G MED
Field Density Tests; G MED

Certified copies of test results for approval not less than 30 days before material is required for the work.

Calibration curves and related test results prior to using the device or equipment being calibrated.

Copies of field test results within 24 hours after the tests are performed.

1.4 SAMPLING AND TESTING

Sampling and testing shall be the responsibility of the Contractor. Sampling and testing shall be performed by a testing laboratory approved in

accordance with Section 01 45 04.00 10 CONTRACTOR QUALITY CONTROL. Work requiring testing will not be permitted until the testing laboratory has been inspected and approved. The materials shall be tested to establish compliance with the specified requirements; testing shall be performed at the specified frequency. The Contracting Officer may specify the time and location of the tests. Copies of test results shall be furnished to the Contracting Officer within 24 hours of completion of the tests.

1.4.1 Sampling

Samples for laboratory testing shall be taken in conformance with ASTM D 75. When deemed necessary, the sampling will be observed by the Contracting Officer.

1.4.2 Tests

The following tests shall be performed in conformance with the applicable standards listed.

1.4.2.1 Sieve Analysis

Sieve analysis shall be made in conformance with ASTM C 117 and ASTM C 136. Sieves shall conform to ASTM E 11.

1.4.2.2 Liquid Limit and Plasticity Index

Liquid limit and plasticity index shall be determined in accordance with ASTM D 4318.

1.4.2.3 Moisture-Density Determinations

The laboratory maximum dry density and optimum moisture content shall be determined in accordance with ASTM D 1557 Method C.

1.4.2.4 Field Density Tests

Density shall be field measured in accordance with ASTM D 1556 or ASTM D 6938. For the method presented in ASTM D 1556 the base plate as shown in the drawing shall be used. For the method presented in ASTM D 6938 the calibration curves shall be checked and adjusted if necessary using only the sand cone method as described in paragraph Calibration, of the ASTM publication. The calibration checks of both the density and moisture gauges shall be made by the prepared containers of material method, as described in paragraph Calibration of ASTM D 6938, on each different type of material being tested at the beginning of a job and at intervals as directed.

1.4.2.5 Wear Test

Wear tests shall be made on GCA course material in conformance with ASTM C 131.

1.4.2.6 Soundness

Soundness tests shall be made on GCA in accordance with ASTM C 88.

1.4.2.7 (Not Used)

1.4.3 Testing Frequency

1.4.3.1 Initial Tests

One of each of the following tests shall be performed on the proposed material prior to commencing construction to demonstrate that the proposed material meets all specified requirements when furnished. If materials from more than one source are going to be utilized, this testing shall be completed for each source.

a. Sieve Analysis

b. Liquid limit and plasticity index.

c. Moisture-density relationship.

d. Wear.

e. Soundness.

1.4.3.2 In Place Tests

Each of the following tests shall be performed on samples taken from the placed and compacted GCA. Samples shall be taken and tested at the rates indicated.

a. Density tests shall be performed on every lift of material placed and at a frequency of one set of tests for every 250 square meters, or portion thereof, of completed area.

b. Sieve Analysis shall be performed on every lift of material placed and at a frequency of one sieve analysis for every 500 square meters, or portion thereof, of material placed.

c. Liquid limit and plasticity index tests shall be performed at the same frequency as the sieve analysis.

d. The total thickness of the base course shall be measured at intervals in such a manner as to ensure one measurement for each 500 square meters of base course. Measurements shall be made in 75 mm diameter test holes penetrating the base course.

1.4.4 Approval of Material

The source of the material shall be selected 30 days prior to the time the material will be required in the work. Tentative approval of material will be based on initial test results. Final approval of the materials will be based on sieve analysis, liquid limit, and plasticity index tests performed on samples taken from the completed and fully compacted course(s).

1.5 WEATHER LIMITATIONS

Construction shall be done when the atmospheric temperature is above 2 degrees C. When the temperature falls below 2 degrees C, the Contractor shall protect all completed areas by approved methods against detrimental effects of freezing. Completed areas damaged by freezing, rainfall, or other weather conditions shall be corrected to meet specified requirements.

1.6 PLANT, EQUIPMENT, AND TOOLS

All plant, equipment, and tools used in the performance of the work shall be subject to approval before the work is started and shall be maintained in satisfactory working condition at all times. The equipment shall be adequate and shall have the capability of producing the required compaction, meeting grade controls, thickness control, and smoothness requirements as set forth herein.

1.7 WAYBILLS AND DELIVERY TICKETS

Before the final statement is allowed, the Contractor shall file certified waybills and certified delivery tickets for all aggregates actually used, as specified in the Submittals paragraph.

PART 2 PRODUCTS

2.1 AGGREGATES

The GCA shall consist of clean, sound, durable particles of crushed stone, crushed gravel, angular sand, or other approved material. GCA shall be free of silt and clay as defined by ASTM D 2487, organic matter, and other objectionable materials or coatings. The portion retained on the 4.75 mm sieve shall be known as coarse aggregate; that portion passing the 4.75 mm sieve shall be known as fine aggregate.

2.1.1 Coarse Aggregate

Coarse aggregates shall be angular particles of uniform density. When the coarse aggregate is supplied from more than one source, aggregate from each source shall meet the specified requirements and shall be stockpiled separately.

a. Crushed Gravel: Crushed gravel shall be manufactured by crushing gravels, and shall meet all the requirements specified below.

b. Crushed Stone: Crushed stone shall consist of freshly mined quarry rock, and shall meet all the requirements specified below.

2.1.1.1 (Not Used)

2.1.1.2 Graded-Crushed Aggregate Base Course

GCA coarse aggregate shall not show more than 40 percent loss when subjected to the Los Angeles abrasion test in accordance with ASTM C 131. GCA coarse aggregate shall not exhibit a loss greater than 18 percent weighted average, at five cycles, when tested for soundness in magnesium sulfate, or 12 percent weighted average, at five cycles, when tested in sodium sulfate in accordance with ASTM C 88. The amount of flat and elongated particles shall not exceed 20 percent for the fraction retained on the 12.5 mm sieve nor 20 percent for the fraction passing the 12.5 mm sieve. A flat particle is one having a ratio of width to thickness greater than 3; an elongated particle is one having a ratio of length to width greater than 3. In the portion retained on each sieve specified, the crushed aggregate shall contain at least 90 percent by weight of crushed pieces having two or more freshly fractured faces with the area of each face being at least equal to 75 percent of the smallest midsectional area of the piece. When two fractures are contiguous, the angle between planes

of the fractures must be at least 30 degrees in order to count as two fractured faces. Crushed gravel shall be manufactured from gravel particles 90 percent of which by weight are retained on the maximum size sieve listed in TABLE 1.

2.1.2 Fine Aggregate

Fine aggregates shall be angular particles of uniform density. When the fine aggregate is supplied from more than one source, aggregate from each source shall meet the specified requirements.

2.1.2.1 (Not Used)

2.1.2.2 Graded-Crushed Aggregate Base Course

GCA fine aggregate shall consist of angular particles produced by crushing stone or gravel that meets the requirements for wear and soundness specified for GCA coarse aggregate. Fine aggregate shall be produced by crushing only particles larger than 4.75 mm sieve in size. The fine aggregate shall contain at least 90 percent by weight of particles having two or more freshly fractured faces in the portion passing the 4.75 mm sieve and retained on the 2 mm sieve, and in the portion passing the 2 mm sieve and retained on the 0.425 mm sieve.

2.1.3 Gradation Requirements

The specified gradation requirements shall apply to the completed base course. The aggregates shall be continuously well graded within the limits specified in TABLE 1. Sieves shall conform to ASTM E 11.

TABLE 1. GRADATION OF AGGREGATES

Percentage by Weight Passing Square-Mesh Sieve

Sieve Designation	No. 3
50.0 mm	100
37.5 mm	95-100
25.0 mm	85-100
19.0 mm	70-90
12.5 mm	30-65
4.75 mm	20-50
2.00 mm	15-40
0.425 mm	5-25
0.075 mm	0-5

NOTE 2: The values are based on aggregates of uniform specific gravity. If materials from different sources are used for the coarse and fine aggregates, they shall be tested in accordance with ASTM C 127 and ASTM C 128 to determine their specific gravities. If the specific gravities vary by more than 10 percent, the percentages passing the various sieves shall be corrected as directed by the Contracting Officer.

2.2 LIQUID LIMIT AND PLASTICITY INDEX

Liquid limit and plasticity index requirements shall apply to the completed

course and shall also apply to any component that is blended to meet the required gradation. The portion of any component or of the completed course passing the 0.425 mm sieve shall be either nonplastic or have a liquid limit not greater than 25 and a plasticity index not greater than 5.

PART 3 EXECUTION

3.1 GENERAL REQUIREMENTS

When the GCA is constructed in more than one layer, the previously constructed layer shall be cleaned of loose and foreign matter by sweeping with power sweepers or power brooms, except that hand brooms may be used in areas where power cleaning is not practicable. Adequate drainage shall be provided during the entire period of construction to prevent water from collecting or standing on the working area. Line and grade stakes shall be provided as necessary for control. Grade stakes shall be in lines parallel to the centerline of the area under construction and suitably spaced for string lining.

3.2 OPERATION OF AGGREGATE SOURCES

Clearing, stripping, and excavating shall be the responsibility of the Contractor. The aggregate sources shall be operated to produce the quantity and quality of materials meeting these specifications requirements in the specified time limit. Aggregate sources on private lands shall be conditioned in agreement with local laws or authorities.

3.3 STOCKPILING MATERIAL

Prior to stockpiling of material, storage sites shall be cleared and leveled by the Contractor. All materials, including approved material available from excavation and grading, shall be stockpiled in the manner and at the locations designated. Aggregates shall be stockpiled on the cleared and leveled areas designated by the Contracting Officer to prevent segregation. Materials obtained from different sources shall be stockpiled separately.

3.4 PREPARATION OF UNDERLYING COURSE

Prior to constructing the base course(s), the underlying course or subgrade shall be cleaned of all foreign substances. At the time of construction of the base course(s), the underlying course shall contain no frozen material. The surface of the underlying course or subgrade shall meet specified compaction and surface tolerances. The underlying course shall conform to Section 31 00 00 EARTHWORK or Section 32 11 16 SUBBASE COURSES. Ruts or soft yielding spots in the underlying courses, areas having inadequate compaction, and deviations of the surface from the requirements set forth herein shall be corrected by loosening and removing soft or unsatisfactory material and by adding approved material, reshaping to line and grade, and recompacting to specified density requirements. For cohesionless underlying courses containing sands or gravels, as defined in ASTM D 2487, the surface shall be stabilized prior to placement of the base course(s). Stabilization shall be accomplished by mixing GCA into the underlying course and compacting by approved methods. The stabilized material shall be considered as part of the underlying course and shall meet all requirements of the underlying course. The finished underlying course shall not be disturbed by traffic or other operations and shall be maintained by the Contractor in a satisfactory condition until the base course is placed.

3.5 INSTALLATION

3.5.1 Mixing the Materials

The coarse and fine aggregates shall be mixed in a stationary plant, or in a traveling plant or bucket loader on an approved paved working area. The Contractor shall make adjustments in mixing procedures or in equipment as directed to obtain true grades, to minimize segregation or degradation, to obtain the required water content, and to insure a satisfactory base course meeting all requirements of this specification.

3.5.2 Placing

The mixed material shall be placed on the prepared subgrade or subbase in layers of uniform thickness with an approved spreader. When a compacted layer 150 mm or less in thickness is required, the material shall be placed in a single layer. When a compacted layer in excess of 150 mm is required, the material shall be placed in layers of equal thickness. No layer shall be thicker than 150 mm or thinner than 75mm when compacted. The layers shall be so placed that when compacted they will be true to the grades or levels required with the least possible surface disturbance. Where the base course is placed in more than one layer, the previously constructed layers shall be cleaned of loose and foreign matter by sweeping with power sweepers, power brooms, or hand brooms, as directed. Such adjustments in placing procedures or equipment shall be made as may be directed to obtain true grades, to minimize segregation and degradation, to adjust the water content, and to insure an acceptable base course.

3.5.3 Grade Control

The finished and completed base course shall conform to the lines, grades, and cross sections shown. Underlying material(s) shall be excavated and prepared at sufficient depth for the required base course thickness so that the finished base course and the subsequent surface course will meet the designated grades.

3.5.4 Edges of Base Course

The base course(s) shall be placed so that the completed section will be a minimum of 600 mm wider, on all sides, than the next layer that will be placed above it. Additionally, approved fill material shall be placed along the outer edges of the base course in sufficient quantities to compact to the thickness of the course being constructed, or to the thickness of each layer in a multiple layer course, allowing in each operation at least a 600 mm width of this material to be rolled and compacted simultaneously with rolling and compacting of each layer of base course. If this base course material is to be placed adjacent to another pavement section, then the layers for both of these sections shall be placed and compacted along this edge at the same time.

3.5.5 Compaction

Each layer of the base course shall be compacted as specified with approved compaction equipment. Water content shall be maintained during the compaction procedure to within plus or minus 2 percent of the optimum water content determined from laboratory tests as specified in paragraph SAMPLING AND TESTING. Rolling shall begin at the outside edge of the surface and proceed to the center, overlapping on successive trips at least one-half

the width of the roller. Alternate trips of the roller shall be slightly different lengths. Speed of the roller shall be such that displacement of the aggregate does not occur. In all places not accessible to the rollers, the mixture shall be compacted with hand-operated power tampers. Compaction shall continue until each layer has a degree of compaction that is at least 100 percent of laboratory maximum density through the full depth of the layer. The Contractor shall make such adjustments in compacting or finishing procedures as may be directed to obtain true grades, to minimize segregation and degradation, to reduce or increase water content, and to ensure a satisfactory base course. Any materials that are found to be unsatisfactory shall be removed and replaced with satisfactory material or reworked, as directed, to meet the requirements of this specification.

3.5.6 Thickness

Compacted thickness of the base course shall be as indicated. No individual layer shall be thicker than 150 mm nor be thinner than 75 mm in compacted thickness. The total compacted thickness of the base course(s) shall be within 13 mm of the thickness indicated. Where the measured thickness is more than 13 mm deficient, such areas shall be corrected by scarifying, adding new material of proper gradation, reblading, and recompacting as directed. Where the measured thickness is more than 13 mm thicker than indicated, the course shall be considered as conforming to the specified thickness requirements. Average job thickness shall be the average of all thickness measurements taken for the job, but shall be within 6 mm of the thickness indicated. The total thickness of the base course shall be measured at intervals in such a manner as to ensure one measurement for each 500 square meters of base course. Measurements shall be made in 75 mm diameter test holes penetrating the base course.

3.5.7 (Not Used)

3.5.8 Finishing

The surface of the top layer of base course shall be finished after final compaction by cutting any overbuild to grade and rolling with a steel-wheeled roller. Thin layers of material shall not be added to the top layer of base course to meet grade. If the elevation of the top layer of base course is 13 mm or more below grade, then the top layer should be scarified to a depth of at least 75 mm and new material shall be blended in and compacted to bring to grade. Adjustments to rolling and finishing procedures shall be made as directed to minimize segregation and degradation, obtain grades, maintain moisture content, and insure an acceptable base course. Should the surface become rough, corrugated, uneven in texture, or traffic marked prior to completion, the unsatisfactory portion shall be scarified, reworked and recompacted or it shall be replaced as directed.

3.5.9 Smoothness

The surface of the top layer shall show no deviations in excess of 10 mm when tested with a 3.66 meter straightedge. Measurements shall be taken in successive positions parallel to the centerline of the area to be paved. Measurements shall also be taken perpendicular to the centerline at 15 meter intervals. Deviations exceeding this amount shall be corrected by removing material and replacing with new material, or by reworking existing material and compacting it to meet these specifications.

3.6 TRAFFIC

Completed portions of the base course may be opened to limited traffic, provided there is no marring or distorting of the surface by the traffic. Heavy equipment shall not be permitted except when necessary to construction, and then the area shall be protected against marring or damage to the completed work.

3.7 MAINTENANCE

The base course shall be maintained in a satisfactory condition until the full pavement section is completed and accepted. Maintenance shall include immediate repairs to any defects and shall be repeated as often as necessary to keep the area intact. Any base course that is not paved over prior to the onset of winter, shall be retested to verify that it still complies with the requirements of this specification. Any area of base course that is damaged shall be reworked or replaced as necessary to comply with this specification.

3.8 DISPOSAL OF UNSATISFACTORY MATERIALS

Any unsuitable materials that must be removed shall be disposed of as directed. No additional payments will be made for materials that must be replaced.

-- End of Section --

SECTION 32 12 10

BITUMINOUS TACK AND PRIME COATS

PART 1 GENERAL

1.1 REFERENCES

The publications listed below form a part of this specification to the extent referenced. The publications are referred to within the text by the basic designation only.

ASTM INTERNATIONAL (ASTM)

ASTM D 140	(2001) Sampling Bituminous Materials
ASTM D 2397	(2002) Cationic Emulsified Asphalt
ASTM D 2995	(1999; R 2004) Determining Application Rate of Bituminous Distributors
ASTM D 977	(2003) Emulsified Asphalt

1.2 SUBMITTALS

Government approval is required for submittals with a "G" designation; submittals not having a "G" designation are for information only. When used, a designation following the "G" designation identifies the office that will review the submittal for the Government. The following shall be submitted in accordance with Section 01 33 00 SUBMITTAL PROCEDURES:

SD-03 Product Data

Equipment, Machines and Tools; G RE

SD-06 Test Reports

Sampling and Testing

Copies of all test results for emulsified asphalt, and bituminous materials, within 24 hours of completion of tests. Certified copies of the manufacturer's test reports indicating temperature viscosity relationship for cutback asphalt, compliance with applicable specified requirements, not less than 30 days before the material is required in the work.

1.3 PLANT, EQUIPMENT, MACHINES AND TOOLS

1.3.1 General Requirements

Plant, equipment, machines and tools used in the work are subject to approval and must be maintained in a satisfactory working condition at all times. Calibrated equipment such as asphalt distributors, scales, batching equipment, spreaders and similar equipment, shall have been recalibrated by a calibration laboratory within 12 months prior to commencing work and every six (6) months thereafter, by such laboratory from the date of

recalibration, during the term of the contract.

1.3.2 Bituminous Distributor

The distributor shall have pneumatic tires of such size and number that the load produced on the base surface does not exceed 295 kg/25 mm of tire width and to prevent rutting, shoving or otherwise damaging the base surface or other layers in the pavement structure. Design and equip the distributor to spray the bituminous material in a uniform coverage at the specified temperature, at readily determined and controlled rates from 0.23 to 9.05 L/square meter, with a pressure range of 172.4 to 517.1 kPa and with an allowable variation from the specified rate of not more than plus or minus 5 percent, and at variable widths. Distributor equipment shall include a separate power unit for the bitumen pump, full-circulation spray bars, tachometer, pressure gauges, volume-measuring devices, adequate heaters for heating of materials to the proper application temperature, a thermometer for reading the temperature of tank contents, and a hand hose attachment suitable for applying bituminous material manually to areas inaccessible to the distributor. Equip the distributor to circulate and agitate the bituminous material during the heating process.

1.3.3 Heating Equipment for Storage Tanks

The equipment for heating the bituminous material shall be steam, electric, or hot oil heaters. Steam heaters shall consist of steam coils and equipment for producing steam, so designed that the steam cannot get into the material. Fix an armored thermometer to the tank with a temperature range from 4.4 to 204.4 degrees C so that the temperature of the bituminous material may be determined at all times.

1.3.4 Power Brooms and Power Blowers

Use power brooms and power blowers suitable for cleaning the surfaces to which the bituminous coat is to be applied.

1.4 WEATHER LIMITATIONS

Apply bituminous coat only when the surface to receive the bituminous coat is dry. Apply bituminous coat only when the atmospheric temperature in the shade is 10 degrees C or above and when the temperature has not been below 2 degrees C for the 12 hours prior to application, unless otherwise directed.

1.5 DELIVERY AND STORAGE

Inspect the materials delivered to the site for contamination and damage. Unload and store the materials with a minimum of handling.

PART 2 PRODUCTS

2.1 PRIME COAT

2.1.1 Emulsified Asphalt

Prime coat shall be emulsified asphalt and shall conform to ASTM D 977, Type SS-1h or ASTM D 2397, Type CSS-1h.

2.2 TACK COAT

2.2.1 Emulsified Asphalt

Tack coat shall be emulsified asphalt and shall conform to ASTM D 977, Type SS-1h or ASTM D 2397, Type CSS-1h.

PART 3 EXECUTION

3.1 PREPARATION OF SURFACE

Immediately before applying the bituminous coat, remove all loose material, dirt, clay, or other objectionable material from the surface to be treated by means of a power broom or blower supplemented with hand brooms. The surface shall be dry and clean at the time of treatment.

3.2 APPLICATION RATE

The exact quantities within the range specified, which may be varied to suit field conditions, will be determined by the Contracting Officer.

3.2.1 Tack Coat

Apply bituminous material for the tack coat in quantities of not less than 0.20 L nor more than 0.70 L/square meter of pavement surface.

3.2.2 Prime Coat

Apply bituminous material for the prime coat in quantities of not less than 0.70 L nor more than 1.80 L/square meter of pavement surface.

3.3 APPLICATION TEMPERATURE

3.3.1 Viscosity Relationship

Asphalt application temperature shall provide an application viscosity between 10 and 60 seconds, Saybolt Furol, or between 20 and 120 square mm/sec, kinematic. Furnish the temperature viscosity relation to the Contracting Officer.

3.3.2 Temperature Ranges

The viscosity requirements determine the application temperature to be used. The following is a normal range of application temperatures:

	Emulsions
SS-1h	20-70 degrees
CSS-1h	20-70 degrees C

*These temperature ranges exceed the flash point of the material and care should be taken in their heating.

3.4 APPLICATION

3.4.1 General

Following preparation and subsequent inspection of the surface, apply the bituminous prime or tack coat with the Bituminous Distributor at the specified rate with uniform distribution over the surface to be treated. Properly treat all areas and spots missed by the distributor with the hand spray. Until the succeeding layer of pavement is placed, maintain the surface by protecting the surface against damage and by repairing deficient areas at no additional cost to the Government. If required, spread clean dry sand to effectively blot up any excess bituminous material. No smoking, fires, or flames other than those from the heaters that are a part of the equipment are permitted within 8 meters of heating, distributing, and transferring operations of bituminous material other than bituminous emulsions. Prevent all traffic, except for paving equipment used in constructing the surfacing, from using the underlying material, whether primed or not, until the surfacing is completed. The bituminous coat shall conform to all requirements as described herein.

3.4.2 Prime Coat

Apply a prime coat to the completed base course material. Hot-mix asphalt shall be placed on the prime coat with five (5) days. The type of liquid asphalt and application rate will be as specified herein. Protect the underlying from any damage (water, traffic, etc.) until the surfacing is placed. Repair (recompact or replace) damage to the underlying material caused by lack of, or inadequate, protection by approved methods at no additional cost to the Government. Apply the bituminous material uniformly over the surface to be treated at a pressure range of 172.4 to 517.1 kPa and at the rate of not less than 0.70 L not more than 1.80 L/square m. To obtain uniform application of the prime coat on the surface treated at the junction of previous and subsequent applications, spread building paper on the surface for a sufficient distance back from the ends of each application to start and stop the prime coat on the paper and to ensure that all sprayers will operate at full force on the surface to be treated. Immediately after application remove and destroy the building paper.

3.4.3 Tack Coat

Apply tack coat at the locations shown on the drawings. Apply the tack coat when the surface to be treated is dry. Immediately following the preparation of the surface for treatment, apply the bituminous material by means of the bituminous distributor, within the limits of temperature specified herein and at a rate of not less than 0.20 L nor more than 0.70 L of diluted emulsion per square meter. Apply the bituminous material so that uniform distribution is obtained over the entire surface to be treated. Treat lightly coated areas and spots missed by the distributor with the bituminous material. Following the application of bituminous material, allow the surface to cure without being disturbed for period of time necessary to permit setting of the tack coat. Apply the bituminous tack coat only as far in advance of the placing of the overlying layer as required for that day's operation. Maintain and protect the treated surface from damage until the succeeding course of pavement is placed.

3.5 CURING PERIOD

Following application of the bituminous material and prior to application of the succeeding layer of pavement, the bituminous coat shall be allowed

to cure and to obtain evaporation of any volatiles or moisture. Maintain the coated surface until the succeeding layer of pavement is placed, by protecting the surface against damage and by repairing and recoating deficient areas. Allow the prime coat to cure without being disturbed for a period of at least 48 hours or longer, as may be necessary to attain penetration into the treated course. Furnish and spread enough sand to effectively blot up and cure excess bituminous material.

3.6 FIELD QUALITY CONTROL

Samples of the bituminous material shall be tested for compliance with the applicable specified requirements. A sample shall be obtained and tested by the Contractor for every 378 liters of bituminous material used.

3.7 SAMPLING AND TESTING

Sampling and testing shall be performed by an approved commercial testing laboratory or by facilities furnished by the Contractor. No work requiring testing will be permitted until the facilities have been inspected and approved.

3.7.1 Sampling

The samples of bituminous material, unless otherwise specified, shall be in accordance with ASTM D 140. Sources from which bituminous materials are to be obtained shall be selected and notification furnished the Contracting Officer within 15 days after the award of the contract.

3.7.2 Calibration Test

Furnish all equipment, materials, and labor necessary to calibrate the bituminous distributor. Calibration shall be made with the approved job material and prior to applying the bituminous coat material to the prepared surface. Calibrate the bituminous distributor in accordance with ASTM D 2995.

3.7.3 Trial Applications

Before providing the complete bituminous coat, apply three lengths of at least 30 meters for the full width of the distributor bar to evaluate the amount of bituminous material that can be satisfactorily applied.

3.7.3.1 Tack Coat Trial Application Rate

Unless otherwise authorized, apply the trial application rate of bituminous tack coat materials in the amount of 0.20 L/square meter. Other trial applications shall be made using various amounts of material as may be deemed necessary.

3.7.3.2 Prime Coat Trial Application Rate

Unless otherwise authorized, apply the trial application rate of bituminous materials in the amount of 1.10 L/square meter. Other trial applications shall be made using various amounts of material as may be deemed necessary.

3.7.4 Sampling and Testing During Construction

Perform quality control sampling and testing as required in paragraph FIELD QUALITY CONTROL.

3.8 TRAFFIC CONTROLS

Keep traffic off surfaces freshly treated with bituminous material. Provide sufficient warning signs and barricades so that traffic will not travel over freshly treated surfaces.

-- End of Section --

SECTION 32 12 15

HOT-MIX ASPHALT (HMA) FOR AIRFIELDS

PART 1 GENERAL

1.1 REFERENCES

The publications listed below form a part of this specification to the extent referenced. The publications are referred to within the text by the basic designation only.

AMERICAN ASSOCIATION OF STATE HIGHWAY AND TRANSPORTATION OFFICIALS (AASHTO)

AASHTO T 308	(2004) Determining the Asphalt Binder Content of Hot Mix Asphalt (HMA) by the Ignition Method

ASPHALT INSTITUTE (AI)

AI MS-02	(6th Edition; 1997) Mix Design Methods for Asphalt

ASTM INTERNATIONAL (ASTM)

ASTM C 117	(2004) Materials Finer Than 75 micrometer (No. 200) Sieve in Mineral Aggregates by Washing
ASTM C 1252	(2003) Uncompacted Void Content of Fine Aggregate (as Influenced by Particle Shape, Surface Texture, and Grading)
ASTM C 127	(2004) Density, Relative Density (Specific Gravity), and Absorption of Coarse Aggregate
ASTM C 128	(2004a) Density, Relative Density (Specific Gravity), and Absorption of Fine Aggregate
ASTM C 131	(2003) Resistance to Degradation of Small-Size Coarse Aggregate by Abrasion and Impact in the Los Angeles Machine
ASTM C 136	(2005) Sieve Analysis of Fine and Coarse Aggregates
ASTM C 142	(1997; R 2004) Clay Lumps and Friable Particles in Aggregates
ASTM C 566	(1997; R 2004) Total Evaporable Moisture Content of Aggregate by Drying
ASTM C 88	(2005) Soundness of Aggregates by Use of

	Sodium Sulfate or Magnesium Sulfate
ASTM D 140	(2001) Sampling Bituminous Materials
ASTM D 1461	(1985; R 2001) Moisture or Volatile Distillates in Bituminous Paving Mixtures
ASTM D 2041	(2003a) Theoretical Maximum Specific Gravity and Density of Bituminous Paving Mixtures
ASTM D 2172	(2001e1) Quantitative Extraction of Bitumen from Bituminous Paving Mixtures
ASTM D 2419	(2002) Sand Equivalent Value of Soils and Fine Aggregate
ASTM D 242	(1995; R 2000e1) Mineral Filler for Bituminous Paving Mixtures
ASTM D 2726	(2004) Bulk Specific Gravity and Density of Non-Absorptive Compacted Bituminous Mixtures
ASTM D 3203	(1994; R 2000) Percent Air Voids in Compacted Dense and Open Bituminous Paving Mixtures
ASTM D 3665	(2002) Random Sampling of Construction Materials
ASTM D 3666	(2004) Minimum Requirements for Agencies Testing and Inspecting Road and Paving Materials
ASTM D 4125	(1994;R 2000) Asphalt Content of Bituminous Mixtures by the Nuclear Method
ASTM D 4791	(1999) Flat Particles, Elongated Particles, or Flat and Elongated Particles in Coarse Aggregate
ASTM D 4867/D 4867M	(2004) Effect of Moisture on Asphalt Concrete Paving Mixtures
ASTM D 5444	(1998) Mechanical Size Analysis of Extracted Aggregate
ASTM D 6307	(2004) Asphalt Content of Hot Mix Asphalt by Ignition Method
ASTM D 6926	(2004) Preparation of Bituminous Specimens Using Marshall Apparatus
ASTM D 6927	(2005e1) Marshall Stability and Flow of Bituminous Mixtures
ASTM D 946	(1982; R 1999) Penetration-Graded Asphalt Cement for Use in Pavement Construction

ASTM D 979	(2001) Sampling Bituminous Paving Mixtures
ASTM D 995	(1995b; R 2002) Mixing Plants for Hot-Mixed, Hot-Laid Bituminous Paving Mixtures

STATE OF CALIFORNIA DEPARTMENT OF TRANSPORTATION (CDT)

CDT Test 526	(2000) Operation of California Profilograph and Evaluation of Profiles

U.S. ARMY CORPS OF ENGINEERS (USACE)

COE CRD-C 171	(1994) Standard Test Method for Determining Percentage of Crushed Particles in Aggregate

1.2 SUBMITTALS

Government approval is required for submittals with a "G" designation; submittals not having a "G" designation are for information only. When used, a designation following the "G" designation identifies the office that will review the submittal for the Government. The following shall be submitted in accordance with Section 01 33 00 SUBMITTAL PROCEDURES:

SD-02 Shop Drawings

Placement Plan; G MED

Proposed placement plan, indicating lane widths, longitudinal joints, and transverse joints for each course or lift.

SD-03 Product Data

Mix Design; G MED

Proposed JMF.

Contractor Quality Control; G MED

Quality control plan.

SD-04 Samples

Asphalt Cement Binder

20 L sample for mix design verification.

Aggregates

Sufficient materials to produce 90 kg of blended mixture for mix design verification.

SD-06 Test Reports

Aggregates; G MED
QC Monitoring

Aggregate and QC test results.

SD-07 Certificates

Asphalt Cement Binder; G MED

Copies of certified test data.

Testing Laboratory

Certification of compliance.

1.3 DESCRIPTION OF WORK

The work shall consist of pavement courses composed of mineral aggregate and asphalt material heated and mixed in a central mixing plant and placed on a prepared course. HMA designed and constructed in accordance with this section shall conform to the lines, grades, thicknesses, and typical cross sections shown on the drawings. Each course shall be constructed to the depth, section, or elevation required by the drawings and shall be rolled, finished, and approved before the placement of the next course. The Contractor shall submit a Placement Plan as specified in the Submittals paragraph.

1.4 (Not Used)

1.5 (Not Used)

1.6 ASPHALT MIXING PLANT

Plants used for the preparation of hot-mix asphalt shall conform to the requirements of ASTM D 995 with the following changes:

a. Truck Scales. The asphalt mixture shall be weighed on approved scales furnished by the Contractor, or on certified public scales at the Contractor's expense. Scales shall be inspected and sealed at least annually by an approved calibration laboratory.

b. Testing Facilities. The Contractor shall provide laboratory facilities at the plant for the use of the verification testing and the Contractor's quality control and acceptance testing.

c. Inspection of Plant. The shall have access at all times, to all areas of the plant for checking adequacy of equipment; inspecting operation of the plant; verifying weights, proportions, and material properties; checking the temperatures maintained in the preparation of the mixtures and for taking samples. The Contractor shall provide assistance as requested, for the to procure any desired samples.

d. Storage Bins. The asphalt mixture may be stored in non-insulated storage bins for a period of time not exceeding 3 hours. The asphalt mixture may be stored in insulated storage bins for a period of time not exceeding 8 hours. The mix drawn from bins shall meet the same requirements as mix loaded directly into trucks.

1.7 HAULING EQUIPMENT

Trucks used for hauling hot-mix asphalt shall have tight, clean, and smooth metal beds. To prevent the mixture from adhering to them, the truck beds

shall be lightly coated with a minimum amount of paraffin oil, lime solution, or other approved material. Petroleum based products shall not be used as a release agent. Each truck shall have a suitable cover to protect the mixture from adverse weather. When necessary to ensure that the mixture will be delivered to the site at the specified temperature, truck beds shall be insulated or heated and covers (tarps) shall be securely fastened.

1.8 ASPHALT PAVERS

Asphalt pavers shall be self-propelled, with an activated screed, heated as necessary, and shall be capable of spreading and finishing courses of hot-mix asphalt which will meet the specified thickness, smoothness, and grade. The paver shall have sufficient power to propel itself and the hauling equipment without adversely affecting the finished surface.

1.8.1 Receiving Hopper

The paver shall have a receiving hopper of sufficient capacity to permit a uniform spreading operation. The hopper shall be equipped with a distribution system to place the mixture uniformly in front of the screed without segregation. The screed shall effectively produce a finished surface of the required evenness and texture without tearing, shoving, or gouging the mixture.

1.8.2 Automatic Grade Controls

If an automatic grade control device is used, the paver shall be equipped with a control system capable of automatically maintaining the specified screed elevation. The control system shall be automatically actuated from either a reference line and/or through a system of mechanical sensors or sensor-directed mechanisms or devices which will maintain the paver screed at a predetermined transverse slope and at the proper elevation to obtain the required surface. The transverse slope controller shall be capable of maintaining the screed at the desired slope within plus or minus 0.1 percent. A transverse slope controller shall not be used to control grade. The controls shall be capable of working in conjunction with any of the following attachments:

a. Ski-type device of not less than 9.14 m in length.

b. Taut stringline set to grade.

c. Short ski or shoe for joint matching.

d. Laser control.

1.9 ROLLERS

Rollers shall be in good condition and shall be operated at slow speeds to avoid displacement of the asphalt mixture. The number, type, and weight of rollers shall be sufficient to compact the mixture to the required density while it is still in a workable condition. Equipment which causes excessive crushing of the aggregate shall not be used.

1.10 WEATHER LIMITATIONS

The hot-mix asphalt shall not be placed upon a wet surface or when the surface temperature of the underlying course is less than specified in

Table 1. The temperature requirements may be waived by the , if requested; however, all other requirements, including compaction, shall be met.

Table 1. Surface Temperature Limitations of Underlying Course

Mat Thickness, mm	Degrees C
75 or greater	4
Less than 75	7

PART 2 PRODUCTS

2.1 AGGREGATES

Aggregates shall consist of crushed stone, crushed gravel, screenings, natural sand and mineral filler, as required. The portion of material retained on the 4.75 mm sieve is coarse aggregate. The portion of material passing the 4.75 mm sieve and retained on the 0.075 mm sieve is fine aggregate. The portion passing the 0.075 mm sieve is defined as mineral filler. All aggregate test results and samples shall be submitted to the at least 14 days prior to start of construction.Aggregate testing shall have been performed within 90 days of performing the mix design.

2.1.1 Coarse Aggregate

Coarse aggregate shall consist of sound, tough, durable particles, free from films of material that would prevent thorough coating and bonding with the asphalt material and free from organic matter and other deleterious substances. The coarse aggregate particles shall meet the following requirements:

a. The percentage of loss shall not be greater than 40 percent after 500 revolutions when tested in accordance with ASTM C 131.

b. The sodium sulfate soundness loss shall not exceed 12 percent, or the magnesium sulfate soundness loss shall not exceed 18 percent after five cycles when tested in accordance with ASTM C 88.

c. At least 75 percent by weight of coarse aggregate shall have at least two or more fractured faces when tested in accordance with COE CRD-C 171. Fractured faces shall be produced by crushing.

d. The particle shape shall be essentially cubical and the aggregate shall not contain more than 20 percent, by weight, of flat and elongated particles (3:1 ratio of maximum to minimum) when tested in accordance with ASTM D 4791.

e. NOT USED

f. Clay lumps and friable particles shall not exceed 0.3 percent, by weight, when tested in accordance with ASTM C 142.

2.1.2 Fine Aggregate

Fine aggregate shall consist of clean, sound, tough, durable particles. The aggregate particles shall be free from coatings of clay, silt, or any objectionable material and shall contain no clay balls. The fine aggregate particles shall meet the following requirements:

a. The quantity of natural sand (noncrushed material) added to the aggregate blend shall not exceed 15 percent by weight of total aggregate.

b. The individual fine aggregate sources shall have a sand equivalent value greater than 45 when tested in accordance with ASTM D 2419.

c. The fine aggregate portion of the blended aggregate shall have an uncompacted void content greater than 45.0 percent when tested in accordance with ASTM C 1252 Method A.

d. Clay lumps and friable particles shall not exceed 0.3 percent, by weight, when tested in accordance with ASTM C 142.

2.1.3 Mineral Filler

Mineral filler shall be nonplastic material meeting the requirements of ASTM D 242.

2.1.4 Aggregate Gradation

The combined aggregate gradation shall conform to gradations specified in Table 2, when tested in accordance with ASTM C 136 and ASTM C 117, and shall not vary from the low limit on one sieve to the high limit on the adjacent sieve or vice versa, but grade uniformly from coarse to fine.

Table 2. Aggregate Gradations

Gradation 2	
Sieve Size, mm	Percent Passing by Mass
25.0	---
19.0	100
12.5	76-96
9.5	69-89
4.75	53-73
2.36	38-60
1.18	26-48
0.60	18-38
0.30	11-27
0.15	6-18
0.075	3-6

2.2 ASPHALT CEMENT BINDER

Asphalt cement binder shall conform to ASTM D 946 Penetration Grade 60-70. Test data indicating grade certification shall be provided by the supplier at the time of delivery of each load to the mix plant. Copies of these certifications shall be submitted to the . The supplier is defined as the last source of any modification to the binder. The may sample and test the binder at the mix plant at any time before or during mix production. Samples for this verification testing shall be obtained by the Contractor in accordance with ASTM D 140 and in the presence of the . These samples shall be furnished to the for the verification testing, which shall be at no cost to the Contractor. Samples of the asphalt cement specified shall be submitted for approval not less than 14 days before start of the test

section.

2.3 MIX DESIGN

The Contractor shall develop the mix design. The asphalt mix shall be composed of a mixture of well-graded aggregate, mineral filler if required, and asphalt material. The aggregate fractions shall be sized, handled in separate size groups, and combined in such proportions that the resulting mixture meets the grading requirements of the job mix formula (JMF). No hot-mix asphalt for payment shall be produced until a JMF has been approved. The hot-mix asphalt shall be designed using hand-held hammer procedures contained in AI MS-02 and the criteria shown in Table 3. Laboratory compaction temperatures for Polymer Modified Asphalts shall be as recommended by the asphalt cement manufacturer. If the Tensile Strength Ratio (TSR) of the composite mixture, as determined by ASTM D 4867/D 4867M is less than 75, the aggregates shall be rejected or the asphalt mixture treated with an anti-stripping agent. The amount of anti-stripping agent added shall be sufficient to produce a TSR of not less than 75. If an antistrip agent is required, it shall be provided by the Contractor at no additional cost. Sufficient materials to produce 90 kg of blended mixture shall be provided to the for verification of mix design at least 14 days prior to construction of test section.

2.3.1 JMF Requirements

The job mix formula shall be submitted in writing by the Contractor for approval at least 14 days prior to the start of the test section and shall include as a minimum:

a. Percent passing each sieve size.

b. Percent of asphalt cement.

c. Percent of each aggregate and mineral filler to be used.

d. Asphalt viscosity grade, penetration grade, or performance grade.

e. Number of blows of hammer per side of molded specimen.

f. Laboratory mixing temperature.

g. Lab compaction temperature.

h. Temperature-viscosity relationship of the asphalt cement.

i. Plot of the combined gradation on the 0.45 power gradation chart, stating the nominal maximum size.

j. Graphical plots and summary tabulation of stability, flow, air voids, voids in the mineral aggregate, and unit weight versus asphalt content as shown in AI MS-02. Summary tabulation shall include individual specimen data for each specimen tested.

k. Specific gravity and absorption of each aggregate.

l. Percent natural sand.

m. Percent particles with two or more fractured faces (in coarse

aggregate).

n. Fine aggregate angularity.

o. Percent flat or elongated particles (in coarse aggregate).

p. Tensile Strength Ratio.

q. Antistrip agent (if required).

r. List of all modifiers.

Table 3. Marshall Design Criteria

Test Property	75 Blow Mix
Stability, newtons minimum	9560 (1)
Flow, 0.25 mm	8-16 (2)
Air voids, percent	3-5
Percent Voids in mineral aggregate (minimum)	See Table 4
Dust Proportion (3)	0.8-1.2
TSR, minimum percent	75

(1) This is a minimum requirement. The average during construction shall be significantly higher than this number to ensure compliance with the specifications.

(2) The flow requirement is not applicable for Polymer Modified Asphalts

(3) Dust Proportion is calculated as the aggregate content, expressed as a percent of mass, passing the 0.075 mm sieve, divided by the effective asphalt content, in percent of total mass of the mixture.

Table 4. Minimum Percent Voids in Mineral Aggregate (VMA) (4)

Aggregate (See Table 2)	Minimum VMA, percent
Gradation 2	14.0

(4) Calculate VMA in accordance with AI MS-02, based on ASTM D 2726 bulk specific gravity for the aggregate.

2.3.2 Adjustments to JMF

The JMF for each mixture shall be in effect until a new formula is approved in writing by the . Should a change in sources of any materials be made, a

new mix design shall be performed and a new JMF approved before the new material is used. The Contractor will be allowed to adjust the JMF within the limits specified below to optimize mix volumetric properties. Adjustments to the JMF shall be limited to plus or minus 4 percent on the 4.75 mm and coarser sieves; plus or minus 3 percent on the 2.36 mm to 0.30 mm sieves; and plus or minus 1 percent on the 0.15 mm sieve. Tolerances given above may permit the aggregate grading to be outside the limits shown in Table 2; this is acceptable. Adjustments to the JMF shall be limited to plus or minus 1.0 percent on the 0.075 mm sieve. The resulting aggregate grading on the 0.075 mm sieve shall not be outside the limits shown in Table 2. Asphalt content adjustments shall be limited to plus or minus 0.40 of binder content. If adjustments are needed that exceed these limits, a new mix design shall be developed.

2.4 (Not Used)

PART 3 EXECUTION

3.1 PREPARATION OF ASPHALT BINDER MATERIAL

The asphalt cement material shall be heated avoiding local overheating and providing a continuous supply of the asphalt material to the mixer at a uniform temperature. The temperature of unmodified asphalts shall be no more than 160 degrees C when added to the aggregates.

3.2 PREPARATION OF MINERAL AGGREGATE

The aggregate for the mixture shall be heated and dried prior to mixing. No damage shall occur to the aggregates due to the maximum temperature and rate of heating used. The temperature of the aggregate and mineral filler shall not exceed 175 degrees C when the asphalt cement is added. The temperature shall not be lower than is required to obtain complete coating and uniform distribution on the aggregate particles and to provide a mixture of satisfactory workability.

3.3 PREPARATION OF HOT-MIX ASPHALT MIXTURE

The aggregates and the asphalt cement shall be weighed or metered and introduced into the mixer in the amount specified by the JMF. The combined materials shall be mixed until the aggregate obtains a thorough and uniform coating of asphalt binder and is thoroughly distributed throughout the mixture. The moisture content of all hot-mix asphalt upon discharge from the plant shall not exceed 0.5 percent by total weight of mixture as measured by ASTM D 1461.

3.4 PREPARATION OF THE UNDERLYING SURFACE

Immediately before placing the hot mix asphalt, the underlying course shall be cleaned of dust and debris. A prime coat and/or tack coat shall be applied in accordance with the contract specifications.

3.5 TEST SECTION

Prior to full production, the Contractor shall place a test section for each JMF used. The Contractor shall construct a test section 75 - 150 m long and two paver passes wide placed in two lanes, with a longitudinal cold joint. The test section shall be of the same depth as the course which it represents. The underlying grade or pavement structure upon which

the test section is to be constructed shall be the same as the remainder of the course represented by the test section. The equipment used in construction of the test section shall be the same equipment to be used on the remainder of the course represented by the test section. The test section shall be placed as part of the project pavement as approved by the .

3.5.1 Sampling and Testing for Test Section

One random sample shall be taken at the plant, triplicate specimens compacted, and tested for stability, flow, laboratory air voids, and Tensile Strength Ratio (TSR). A portion of the same sample shall be tested for theoretical maximum density (TMD), aggregate gradation and asphalt content. Four randomly selected cores shall be taken from the finished pavement mat, and four from the longitudinal joint, and tested for density. Random sampling shall be in accordance with procedures contained in ASTM D 3665. The test results shall be within the tolerances or exceed the minimum values shown in Table 5 for work to continue. If all test results meet the specified requirements, the test section shall remain as part of the project pavement. If test results exceed the tolerances shown, the test section shall be removed and replaced at no cost to the and another test section shall be constructed.

Table 5. Test Section Requirements for Material and Mixture Properties

Property	Specification Limit
Aggregate Gradation-Percent Passing (Individual Test Result)	
4.75 mm and larger	JMF plus or minus 8
2.36, 1.18, 0.60, and 0.30 mm	JMF plus or minus 6
0.15 and 0.075 mm	JMF plus or minus 2.0
Asphalt Content, Percent (Individual Test Result)	JMF plus or minus 0.5
Laboratory Air Voids, Percent (Average of 3 specimens)	JMF plus or minus 1.0
VMA, Percent (Average of 3 specimens)	14 minimum
Stability, newtons (Average of 3 specimens)	9560 minimum
Flow, 0.25 mm (Average of 3 specimens)	8 - 16
Tensile Strength Ratio (TSR)	75% minimum
Mat Density, Percent of TMD (Average of 4 Random Cores)	93.0 - 96.5
Joint Density, Percent of TMD (Average of 4 Random Cores)	91.5 - 96.5

3.5.2 Additional Test Sections

If the initial test section should prove to be unacceptable, the necessary adjustments to the JMF, plant operation, placing procedures, and/or rolling procedures shall be made. A second test section shall then be placed.

Additional test sections, as required, shall be constructed and evaluated for conformance to the specifications. Full production shall not begin until an acceptable section has been constructed and accepted.

3.6 TESTING LABORATORY

The laboratories used to develop the JMF, perform Contractor Quality Control and acceptance testing, and for verification testing shall meet the requirements of ASTM D 3666. A certification signed by the manager of the laboratory stating that it meets these requirements or clearly listing all deficiencies shall be submitted to the prior to the start of construction. The certification shall contain as a minimum:

a. Qualifications of personnel; laboratory manager, supervising technician, and testing technicians.

b. A listing of equipment to be used in developing the job mix.

c. A copy of the laboratory's quality control system.

d. Evidence of participation in the AASHTO Materials Reference Laboratory (AMRL) program.

3.7 TRANSPORTING AND PLACING

3.7.1 Transporting

The hot-mix asphalt shall be transported from the mixing plant to the site in clean, tight vehicles. Deliveries shall be scheduled so that placing and compacting of mixture is uniform with minimum stopping and starting of the paver. Adequate artificial lighting shall be provided for night placements. Hauling over freshly placed material will not be permitted until the material has been compacted as specified, and allowed to cool to 60 degrees C.

3.7.2 Placing

The mix shall be placed in lifts of adequate thickness and compacted at a temperature suitable for obtaining density, surface smoothness, and other specified requirements. Upon arrival, the mixture shall be placed to the full width by an asphalt paver; it shall be struck off in a uniform layer of such depth that, when the work is completed, it shall have the required thickness and conform to the grade and contour indicated. The speed of the paver shall be regulated to eliminate pulling and tearing of the asphalt mat. Unless otherwise permitted, placement of the mixture shall begin along the centerline of a crowned section or on the high side of areas with a one-way slope. The mixture shall be placed in consecutive adjacent strips having a minimum width of 3 m. The longitudinal joint in one course shall offset the longitudinal joint in the course immediately below by at least 300 mm; however, the joint in the surface course shall be at the centerline of the pavement. Transverse joints in one course shall be offset by at least 3 m from transverse joints in the previous course. Transverse joints in adjacent lanes shall be offset a minimum of 3 m. On isolated areas where irregularities or unavoidable obstacles make the use of mechanical spreading and finishing equipment impractical, the mixture may be spread and luted by hand tools.

3.8 COMPACTION OF MIXTURE

After placing, the mixture shall be thoroughly and uniformly compacted by rolling. The surface shall be compacted as soon as possible without causing displacement, cracking or shoving. The sequence of rolling operations and the type of rollers used shall be at the discretion of the Contractor, with the exception that the Contractor shall not apply more than three passes with a vibratory roller in the vibrating mode. The speed of the roller shall, at all times, be sufficiently slow to avoid displacement of the hot mixture and be effective in compaction. Any displacement occurring as a result of reversing the direction of the roller, or from any other cause, shall be corrected at once. Sufficient rollers shall be furnished to handle the output of the plant. Rolling shall continue until the surface is of uniform texture, true to grade and cross section, and the required field density is obtained. To prevent adhesion of the mixture to the roller, the wheels shall be kept properly moistened but excessive water will not be permitted. In areas not accessible to the roller, the mixture shall be thoroughly compacted with hand tampers. Any mixture that becomes loose and broken, mixed with dirt, contains check-cracking, or is in any way defective shall be removed full depth, replaced with fresh hot mixture and immediately compacted to conform to the surrounding area. This work shall be done at the Contractor's expense. Skin patching will not be allowed.

3.9 JOINTS

The formation of joints shall be made ensuring a continuous bond between the courses and to obtain the required density. All joints shall have the same texture as other sections of the course and meet the requirements for smoothness and grade.

3.9.1 Transverse Joints

The roller shall not pass over the unprotected end of the freshly laid mixture, except when necessary to form a transverse joint. When necessary to form a transverse joint, it shall be made by means of placing a bulkhead or by tapering the course. The tapered edge shall be cut back to its full depth and width on a straight line to expose a vertical face prior to placing the adjacent lane. The cutback material shall be removed from the project. In both methods, all contact surfaces shall be given a light tack coat of asphalt material before placing any fresh mixture against the joint.

3.9.2 Longitudinal Joints

Longitudinal joints which are irregular, damaged, uncompacted, cold (less than 80 degrees C at the time of placing the adjacent lane), or otherwise defective, shall be cut back a maximum of 75 mm from the top edge of the lift with a cutting wheel to expose a clean, sound vertical surface for the full depth of the course. All cutback material shall be removed from the project. Cutting equipment that uses water as a cooling or cutting agent shall not be permitted. All contact surfaces shall be given a light tack coat of asphalt material prior to placing any fresh mixture against the joint.

3.10 CONTRACTOR QUALITY CONTROL

3.10.1 General Quality Control Requirements

The Contractor shall develop an approved Quality Control Plan. Hot-mix

asphalt for payment shall not be produced until the quality control plan has been approved. The plan shall address all elements which affect the quality of the pavement including, but not limited to:

a. Mix Design and unique JMF identification code

b. Aggregate Grading

c. Quality of Materials

d. Stockpile Management and procedures to prevent contamination

e. Proportioning

f. Mixing and Transportation

g. Correlation of mechanical hammer to hand hammer. Determine the number of blows of the mechanical hammer required to provide the same density of the JMF as provided by the hand hammer. Use the average of three specimens per trial blow application.

h. Mixture Volumetrics

i. Moisture Content of Mixtures

j. Placing and Finishing

k. Joints

l. Compaction

m. Surface Smoothness

n. Truck bed release agent

3.10.2 Testing Laboratory

The Contractor shall provide a fully equipped asphalt laboratory located at the plant or job site. It shall be equipped with heating and air conditioning units to maintain a temperature of 24 plus or minus 2.3 degrees C. Laboratory facilities shall be kept clean and all equipment shall be maintained in proper working condition. The shall be permitted unrestricted access to inspect the Contractor's laboratory facility, to witness quality control activities, and to perform any check testing desired. The will advise the Contractor in writing of any noted deficiencies concerning the laboratory facility, equipment, supplies, or testing personnel and procedures. When the deficiencies are serious enough to adversely affect test results, the incorporation of the materials into the work shall be suspended immediately and will not be permitted to resume until the deficiencies are corrected.

3.10.3 Quality Control Testing

The Contractor shall perform all quality control tests applicable to these specifications and as set forth in the Quality Control Program. The testing program shall include, but shall not be limited to, tests for the control of asphalt content, aggregate gradation, temperatures, aggregate moisture, moisture in the asphalt mixture, laboratory air voids, stability, flow, in-place density, grade and smoothness. A Quality Control Testing

Plan shall be developed as part of the Quality Control Program.

3.10.3.1 Asphalt Content

A minimum of two tests to determine asphalt content will be performed per lot (a lot is defined in paragraph MATERIAL ACCEPTANCE) by one of the following methods: extraction method in accordance with ASTM D 2172, Method A or B, the ignition method in accordance with the AASHTO T 308, ASTM D 6307, or the nuclear method in accordance with ASTM D 4125, provided each method is calibrated for the specific mix being used. For the extraction method, the weight of ash, as described in ASTM D 2172, shall be determined as part of the first extraction test performed at the beginning of plant production; and as part of every tenth extraction test performed thereafter, for the duration of plant production. The last weight of ash value obtained shall be used in the calculation of the asphalt content for the mixture.

3.10.3.2 Aggregate Gradation and Specific Gravity

Aggregate gradations shall be determined a minimum of twice per lot from mechanical analysis of recovered aggregate in accordance with ASTM D 5444 or ASTM D 6307. For batch plants, aggregates shall be tested in accordance with ASTM C 136 using actual batch weights to determine the combined aggregate gradation of the mixture. The specifc gravity of each aggregate size grouping shall be determined for each 18,000 metric tons in accordance with ASTM C 127 or ASTM C 128.

3.10.3.3 Temperatures

Temperatures shall be checked at least four times per lot, at necessary locations, to determine the temperature at the dryer, the asphalt cement in the storage tank, the asphalt mixture at the plant, and the asphalt mixture at the job site.

3.10.3.4 Aggregate Moisture

The moisture content of aggregate used for production shall be determined a minimum of once per lot in accordance with ASTM C 566.

3.10.3.5 Moisture Content of Mixture

The moisture content of the mixture shall be determined at least once per lot in accordance with ASTM D 1461 or an approved alternate procedure.

3.10.3.6 Laboratory Air Voids, Marshall Stability and Flow

Mixture samples shall be taken at least four times per lot and compacted into specimens, using 75 blows per side with the Marshall hand-held hammer as described in ASTM D 6926. After compaction, the laboratory air voids of each specimen shall be determined, as well as the Marshall stability and flow, as described in ASTM D 6927.

3.10.3.7 In-Place Density

The Contractor shall conduct any necessary testing to ensure the specified density is achieved. A nuclear gauge or other non-destructive testing device may be used to monitor pavement density.

3.10.3.8 Grade and Smoothness

The Contractor shall conduct the necessary checks to ensure the grade and smoothness requirements are met in accordance with paragraph MATERIAL ACCEPTANCE.

3.10.3.9 Additional Testing

Any additional testing, which the Contractor deems necessary to control the process, may be performed at the Contractor's option.

3.10.3.10 QC Monitoring

The Contractor shall submit all QC test results to the on a daily basis as the tests are performed. The reserves the right to monitor any of the Contractor's quality control testing and to perform duplicate testing as a check to the Contractor's quality control testing.

3.10.4 Sampling

When directed by the , the Contractor shall sample and test any material which appears inconsistent with similar material being produced, unless such material is voluntarily removed and replaced or deficiencies corrected by the Contractor. All sampling shall be in accordance with standard procedures specified.

3.10.5 Control Charts

For process control, the Contractor shall establish and maintain linear control charts on both individual samples and the running average of last four samples for the parameters listed in Table 6, as a minimum. These control charts shall be posted as directed by the and shall be kept current at all times. The control charts shall identify the project number, the test parameter being plotted, the individual sample numbers, the Action and Suspension Limits listed in Table 6 applicable to the test parameter being plotted, and the Contractor's test results. Target values from the JMF shall also be shown on the control charts as indicators of central tendency for the cumulative percent passing, asphalt content, and laboratory air voids parameters. When the test results exceed either applicable Action Limit, the Contractor shall take immediate steps to bring the process back in control. When the test results exceed either applicable Suspension Limit, the Contractor shall halt production until the problem is solved. The Contractor shall use the control charts as part of the process control system for identifying trends so that potential problems can be corrected before they occur. Decisions concerning mix modifications shall be made based on analysis of the results provided in the control charts. The Quality Control Plan shall indicate the appropriate action which shall be taken to bring the process into control when certain parameters exceed their Action Limits.

Table 6. Action and Suspension Limits for the Parameters to be Plotted on Individual and Running Average Control Charts

Parameter to be Plotted	Individual Samples		Running Average of Last Four Samples	
	Action Limit	Suspension Limit	Action Limit	Suspension Limit
4.75 mm sieve, Cumulative % Passing, deviation from JMF target; plus or minus values	6	8	4	5
0.6 mm sieve, Cumulative % Passing, deviation from JMF target; plus or minus values	4	6	3	4
0.075 mm sieve, Cumulative % Passing, deviation from JMF target; plus or minus values	1.4	2.0	1.1	1.5
Stability, newtons (minimum) 75 blow JMF	7830	7290	9560	9030
Flow, 0.25 mm 75 blow JMF	8 min. 16 max.	7 min. 17 max.	9 min. 15 max.	8 min. 16 max.
Asphalt content, % deviation from JMF target; plus or minus value	0.4	0.5	0.2	0.3
Laboratory Air Voids, % deviation from JMF target value	No specific action and suspension limits set since this parameter is used to accept/reject			
In-place Mat Density, % of TMD	No specific action and suspension limits set since this parameter is used to acept/reject			
In-place Joint Density, % of TMD	No specific action and suspension limits set since this parameter is used to accept/reject			

3.11 MATERIAL ACCEPTANCE

Testing for acceptability of work will be performed by the or by an independent laboratory hired by the Acceptance of the plant produced mix and in-place requirements will be on a lot to lot basis. A standard lot for all requirements will be equal to 2000 metric tons. Acceptance of individual lots of hot-mix asphalt will be made based on in-place density, laboratory air voids, grade and smoothness in accordance with the following paragraphs. Grade and surface smoothness determinations will be made on the lot as a whole. Exceptions or adjustments to this will be made in situations where the mix within one lot is placed as part of both the intermediate and surface courses, thus grade and smoothness measurements

for the entire lot cannot be made. In order to evaluate laboratory air voids and in-place (field) density, each lot will be divided into four equal sublots.

3.11.1 Acceptance

When a lot of material fails to meet the specification requirements for acceptance, that lot shall be removed and replaced.

3.11.2 Sublot Sampling

One random mixture sample for determining laboratory air voids, theoretical maximum density, and for any additional testing the desires, will be taken from a loaded truck delivering mixture to each sublot, or other appropriate location for each sublot. All samples will be selected randomly, using commonly recognized methods of assuring randomness conforming to ASTM D 3665 and employing tables of random numbers or computer programs. Laboratory air voids will be determined from three laboratory compacted specimens of each sublot sample in accordance with ASTM D 6926. The specimens will be compacted within 2 hours of the time the mixture was loaded into trucks at the asphalt plant. Samples will not be reheated prior to compaction and insulated containers will be used as necessary to maintain the temperature.

3.11.3 Additional Sampling and Testing

The reserves the right to direct additional samples and tests for any area which appears to deviate from the specification requirements. The cost of any additional testing will be paid for by the . Testing in these areas will be treated as a separate lot. Payment will be made for the quantity of HMA represented by these tests in accordance with the provisions of this section.

3.11.4 Laboratory Air Voids and Theoretical Maximum Density

Laboratory air voids will be calculated in accordance with ASTM D 3203 by determining the Marshall density of each lab compacted specimen using the laboratory-prepared, thoroughly dry method in ASTM D 2726 and determining the theoretical maximum density (TMD) of every other sublot sample using ASTM D 2041. Laboratory air void calculations for each sublot will use the latest theoretical maximum density values obtained, either for that sublot or the previous sublot. The mean absolute deviation of the four laboratory air void contents (one from each sublot) from the JMF air void content will be evaluated for acceptance in accordance with Table 7. All laboratory air void tests will be completed and reported within 24 hours after completion of construction of each lot. The TMD is also used for computation of compaction, as required in paragraph: Mat and Joint Densities.

3.11.5 Mean Absolute Deviation

An example of the computation of mean absolute deviation for laboratory air voids is as follows: Assume that the laboratory air voids are determined from 4 random samples of a lot (where 3 specimens were compacted from each sample). The average laboratory air voids for each sublot sample are determined to be 3.5, 3.0, 4.0, and 3.7. Assume that the target air voids from the JMF is 4.0. The mean absolute deviation is then:

Mean Absolute Deviation = $(|3.5 - 4.0| + |3.0 - 4.0| + |4.0 - 4.0| + |3.7 - 4.0|)/4$

= (0.5 + 1.0 + 0.0 + 0.3)/4 = (1.8)/4 = 0.45

The mean absolute deviation for laboratory air voids is determined to be 0.45. It can be seen from Table 7 that the lot is acceptable.

Table 7. Acceptance Based on Laboratory Air Voids

Mean Absolute Deviation of Lab Air Voids from JMF	Accept/Reject
0.80 or less	Accept
0.81 or greater	Reject

3.11.6 In-place Density

3.11.6.1 General Density Requirements

For determining in-place density, one random core (100 mm or 150 mm in diameter) will be taken by the from the mat (interior of the lane) of each sublot, and one random core will be taken from the joint (immediately over joint) of each sublot, in accordance with ASTM D 979. Each random core will be full thickness of the layer being placed. When the random core is less than 25 mm thick, it will not be included in the analysis. In this case, another random core will be taken. After air drying in accordance with ASTM D 2726 for laboratory-prepared, thoroughly dry specimens, cores obtained from the mat and from the joints will be used for in-place density determination.

3.11.6.2 Mat and Joint Densities

The average in-place mat and joint densities are expressed as a percentage of the average TMD for the lot. The average TMD for each lot will be determined as the average TMD of the two random samples per lot. The average in-place mat density and joint density for a lot are determined and compared with Table 8 to determine acceptance or rejection of the lot.

Table 8. Accpetance Based on In-place Density

Average Mat Density (4 Cores)	Accept/Reject	Average Joint Density (4 Cores)
93.0 - 96.5	Accept	91.5 - 96.5
below 93.0 / above 96.5	Reject	below 91.5 / above 96.5

3.11.7 Grade

Within 5 working days after completion of a particular lot incorporating the final wearing course, the Contractor shall test the final wearing surface of the pavement for conformance with specified plan grade requirements. All testing shall be performed in the presence of the . The final wearing surface of pavement shall conform to the elevations and cross sections shown within a tolerance of 9 mm for runways or 15 mm for taxiways and aprons from the plan grade established and approved at site of work. Finished surfaces at juncture with other pavements shall coincide with

finished surfaces of abutting pavements. Deviation from the plan elevation will not be permitted in areas of pavements where closer conformance with planned elevation is required for the proper functioning of drainage and other appurtenant structures involved. The grade will be determined by running lines of levels at intervals of 7.6 m, or less, longitudinally and transversely, to determine the elevation of the completed pavement surface. Detailed notes of the results of the testing shall be kept and a copy furnished to the immediately after each day's testing. When more than 10 percent of all measurements made within a lot are outside the tolerance, the Contractor shall remove the surface lift full depth; the Contractor shall then replace the lift with hot-mix asphalt to meet specification requirements, at no additional cost to the. Diamond grinding may be used to remove high spots to meet grade requirements. Skin patching for correcting low areas or planing or milling for correcting high areas will not be permitted.

3.11.8 Surface Smoothness

The Contractor shall use both of the following methods to test and evaluate surface smoothness of the pavement. All testing shall be performed in the presence of the . Detailed notes of the results of the testing shall be kept and a copy furnished to the immediately after each day's testing. The profilograph method shall be used for all longitudinal and transverse testing, except where the runs would be less than 60 m in length and the ends where the straightedge shall be used. Where drawings show required deviations from a plane surface (crowns, drainage inlets, etc.), the surface shall be finished to meet the approval of the .

3.11.8.1 Smoothness Requirements

a. Straightedge Testing: The finished surfaces of the pavements shall have no abrupt change of 3 mm or more, and all pavements shall be within the tolerances specified in Table 9 when checked with an approved 4 m straightedge.

Table 9. Straightedge Surface Smoothness--Pavements

Pavement Category	Direction of Testing	Tolerance, mm
Runways and taxiways	Longitudinal	3
	Transverse	6
Calibration hardstands and compass swinging bases	Longitudinal	3
	Transverse	3
All other airfields and helicopter paved areas	Longitudinal	6
	Transverse	6

b. Profilograph Testing: The finished surfaces of the pavements shall have no abrupt change of 3 mm or more, and all pavement shall have a Profile Index not greater than specified in Table 10 when tested with an approved California-type profilograph. If the extent of the pavement in either direction is less than 60 m, that direction shall be tested by the straightedge method and shall meet requirements specified above.

Table 10. Profilograph Surface Smoothness--Pavements

Pavement Category	Direction of Testing	Maximum Specified Profile Index (mm/km)
Runways	Longitudinal	110
	Transverse	140
Taxiways	Longitudinal	140
	Transverse	(Use Straightedge)
Calibration Hardstands & Compass Swinging Bases		(Use Straightedge)
All Other Airfield & Helicopter Paved Areas	Longitudinal	140
	Transverse	140

3.11.8.2 Testing Method

After the final rolling, but not later than 24 hours after placement, the surface of the pavement in each entire lot shall be tested by the Contractor in such a manner as to reveal all surface irregularities exceeding the tolerances specified above. Separate testing of individual sublots is not required. If any pavement areas are ground, these areas shall be retested immediately after grinding. The entire area of the pavement shall be tested in both a longitudinal and a transverse direction on parallel lines. The transverse lines shall be 4.5 m or less apart, as directed. The longitudinal lines shall be at the centerline of each paving lane for lines less than 6.1 m and at the third points for lanes 6.1 m or greater. Other areas having obvious deviations shall also be tested. Longitudinal testing lines shall be continuous across all joints.

a. Straightedge Testing. The straightedge shall be held in contact with the surface and moved ahead one-half the length of the straightedge for each successive measurement. The amount of surface irregularity shall be determined by placing the freestanding (unleveled) straightedge on the pavement surface and allowing it to rest upon the two highest spots covered by its length, and measuring the maximum gap between the straightedge and the pavement surface in the area between these two high points.

b. Profilograph Testing. Profilograph testing shall be performed using approved equipment and procedures described in CDT Test 526. The equipment shall utilize electronic recording and automatic computerized reduction of data to indicate "must-grind" bumps and the Profile Index for the pavement. The "blanking band" shall be 5 mm wide and the "bump template" shall span 25 mm with an offset of 10 mm. The profilograph shall be operated by an approved, factory-trained operator on the alignments specified above. A copy of the reduced tapes shall be furnished the at the end of each day's testing.

3.11.8.3 Payment Adjustment for Smoothness

a. Straightedge Testing. Location and deviation from straightedge for all measurements shall be recorded. When more than 10.0 percent of all measurements made within a lot exceed the tolerance specified in paragraph Smoothness Requirements above, after any reduction of high

spots or removal and replacement, the lot shall be removed and replaced at no additional cost to the . Regardless of the above, any small individual area with surface deviation which exceeds the tolerance given above by more than 50 percent, shall be corrected by diamond grinding to meet the specification requirements above or shall be removed and replaced at no additional cost to the .

b. Profilograph Testing. Location and data from all profilograph measurements shall be recorded. When the Profile Index of a lot exceeds the tolerance specified in paragraph Smoothness Requirements above by 16 mm/km, the lot shall be removed and replaced at no additional cost to the . Regardless of the above, any small individual area with surface deviation which exceeds the tolerance given above by more than 79 mm/km or more, shall be corrected by grinding to meet the specification requirements above or shall be removed and replaced at no additional cost to the .

c. Bumps ("Must Grind" Areas). Any bumps ("must grind" areas) shown on the profilograph trace which exceed 10 mm in height shall be reduced by diamond grinding until they do not exceed 7.5 mm when retested. Such grinding shall be tapered in all directions to provide smooth transitions to areas not requiring grinding. The following will not be permitted: (1) skin patching for correcting low areas, (2) planing or milling for correcting high areas. At the Contractor's option, pavement areas, including ground areas, may be rechecked with the profilograph in order to record a lower Profile Index.

-- End of Section --

SECTION 32 13 11

CONCRETE PAVEMENT FOR AIRFIELDS AND OTHER HEAVY-DUTY PAVEMENTS

PART 1 GENERAL

1.1 REFERENCES

The publications listed below form a part of this specification to the extent referenced. The publications are referred to within the text by the basic designation only.

ACI INTERNATIONAL (ACI)

ACI 211.1	(1991; R 2009) Standard Practice for Selecting Proportions for Normal, Heavyweight and Mass Concrete
ACI 214R	(2002; Errata 2010) Evaluation of Strength Test Results of Concrete
ACI 305R	(1999; Errata 2006) Specification for Hot Weather Concreting
ACI 306R	(1988; R 2002) Cold Weather Concreting

AMERICAN ASSOCIATION OF STATE HIGHWAY AND TRANSPORTATION OFFICIALS (AASHTO)

AASHTO M 182	(2009) Standard Specification for Burlap Cloth Made from Jute or Kenaf and Cotton Mats

ASTM INTERNATIONAL (ASTM)

ASTM A 184/A 184M	(2006) Standard Specification for Fabricated Deformed Steel Bar Mats for Concrete Reinforcement
ASTM A 185/A 185M	(2007) Standard Specification for Steel Welded Wire Reinforcement, Plain, for Concrete
ASTM A 497/A 497M	(2007) Standard Specification for Steel Welded Wire Reinforcement, Deformed, for Concrete
ASTM A 615/A 615M	(2009b) Standard Specification for Deformed and Plain Carbon-Steel Bars for Concrete Reinforcement
ASTM A 775/A 775M	(2007b) Standard Specification for Epoxy-Coated Steel Reinforcing Bars
ASTM A 996/A 996M	(2009b) Standard Specification for Rail-Steel and Axle-Steel Deformed Bars

	for Concrete Reinforcement
ASTM C 1017/C 1017M	(2007) Standard Specification for Chemical Admixtures for Use in Producing Flowing Concrete
ASTM C 1064/C 1064M	(2008) Standard Test Method for Temperature of Freshly Mixed Hydraulic-Cement Concrete
ASTM C 1077	(2010c) Standard Practice for Laboratories Testing Concrete and Concrete Aggregates for Use in Construction and Criteria for Laboratory Evaluation
ASTM C 117	(2004) Standard Test Method for Materials Finer than 75-um (No. 200) Sieve in Mineral Aggregates by Washing
ASTM C 123	(2004) Standard Test Method for Lightweight Particles in Aggregate
ASTM C 1240	(2005) Standard Specification for Silica Fume Used in Cementitious Mixtures
ASTM C 1260	(2007) Standard Test Method for Potential Alkali Reactivity of Aggregates (Mortar-Bar Method)
ASTM C 131	(2006)Standard Test Method for Resistance to Degradation of Small-Size Coarse Aggregate by Abrasion and Impact in the Los Angeles Machine
ASTM C 136	(2006) Standard Test Method for Sieve Analysis of Fine and Coarse Aggregates
ASTM C 138/C 138M	(2010a) Standard Test Method for Density ("Unit Weight"), Yield, and Air Content (Gravimetric) of Concrete
ASTM C 142	(1997; R 2004) Standard Test Method for Clay Lumps and Friable Particles in Aggregates
ASTM C 143/C 143M	(2010) Standard Test Method for Slump of Hydraulic-Cement Concrete
ASTM C 150/C 150M	(2009) Standard Specification for Portland Cement
ASTM C 1567	(2008) Standard Test Method for Potential Alkali-Silica Reactivity of Combinations of Cementitious Materials and Aggregate (Accelerated Mortar-Bar Method)
ASTM C 1602/C 1602M	(2006) Standard Specification for Mixing Water Used in Production of Hydraulic Cement Concrete

ASTM C 172	(2008) Standard Practice for Sampling Freshly Mixed Concrete
ASTM C 174/C 174M	(2006) Standard Test Method for Measuring Thickness of Concrete Elements Using Drilled Concrete Cores
ASTM C 192/C 192M	(2007) Standard Practice for Making and Curing Concrete Test Specimens in the Laboratory
ASTM C 231	(2009b) Standard Test Method for Air Content of Freshly Mixed Concrete by the Pressure Method
ASTM C 260	(2006) Standard Specification for Air-Entraining Admixtures for Concrete
ASTM C 294	(2005) Standard Descriptive Nomenclature for Constituents of Concrete Aggregates
ASTM C 295	(2008) Petrographic Examination of Aggregates for Concrete
ASTM C 31/C 31M	(2009) Standard Practice for Making and Curing Concrete Test Specimens in the Field
ASTM C 33/C 33M	(2008) Standard Specification for Concrete Aggregates
ASTM C 494/C 494M	(2010) Standard Specification for Chemical Admixtures for Concrete
ASTM C 78	(2009) Standard Test Method for Flexural Strength of Concrete (Using Simple Beam with Third-Point Loading)
ASTM C 88	(2005) Standard Test Method for Soundness of Aggregates by Use of Sodium Sulfate or Magnesium Sulfate
ASTM C 881/C 881M	(2002) Standard Specification for Epoxy-Resin-Base Bonding Systems for Concrete
ASTM C 94/C 94M	(2009a) Standard Specification for Ready-Mixed Concrete
ASTM D 1751	(2004; R 2008) Standard Specification for Preformed Expansion Joint Filler for Concrete Paving and Structural Construction (Nonextruding and Resilient Bituminous Types)
ASTM D 1752	(2004a; R 2008) Standard Specification for Preformed Sponge Rubber Cork and Recycled PVC Expansion

ASTM D 2419	(2009) Sand Equivalent Value of Soils and Fine Aggregate
ASTM D 2995	(1999; R 2009) Determining Application Rate of Bituminous Distributors
ASTM D 3665	(2007) Random Sampling of Construction Materials
ASTM D 4791	(2005e1) Flat Particles, Elongated Particles, or Flat and Elongated Particles in Coarse Aggregate
ASTM D 75/D 75M	(2009) Standard Practice for Sampling Aggregates

NATIONAL READY MIXED CONCRETE ASSOCIATION (NRMCA)

NRMCA QC 3	(2003) Quality Control Manual: Section 3, Plant Certifications Checklist: Certification of Ready Mixed Concrete Production Facilities

STATE OF CALIFORNIA DEPARTMENT OF TRANSPORTATION (CDT)

CDT Test 526	(2002) Operation of California Profilograph and Evaluation of Profiles

U.S. ARMY CORPS OF ENGINEERS (USACE)

COE CRD-C 130	(2001) Standard Recommended Practice for Estimating Scratch Hardness of Coarse Aggregate Particles
COE CRD-C 143	(1962) Specifications for Meters for Automatic Indication of Moisture in Fine Aggregate
COE CRD-C 300	(1990) Specifications for Membrane-Forming Compounds for Curing Concrete
COE CRD-C 521	(1981) Standard Test Method for Frequency and Amplitude of Vibrators for Concrete
COE CRD-C 55	(1992) Test Method for Within-Batch Uniformity of Freshly Mixed Concrete

1.2 SYSTEM DESCRIPTION

This section is intended to stand alone for construction of concrete pavement. However, where the construction covered herein interfaces with other sections, the construction at each interface shall conform to the requirements of both this section and the other section, including tolerances for both.

1.2.1 Surface Smoothness

Use the profilograph method for all longitudinal testing, except for paving lanes less than 60 m in length. Use the straightedge method for transverse

testing, for longitudinal testing where the length of each pavement lane is less than 60 m, and at the ends of the paving limits for the project. Where drawings show required deviations from a plane surface (crowns, drainage inlets, etc.), finish the surface to meet the approval of the Contracting Officer. Detailed notes shall be kept of the results of the testing and a copy furnished to the Government after each day's testing.

a. Straightedge Testing: The finished surfaces of the pavements shall have no abrupt change of 6 mm or more, and all pavements shall be within the limits specified herinafter when checked with an approved 4 m straightedge. Runways and taxiways shall have a variation from the specified straight edge not greater than 3 mm in the longitudinal direction and not greater than 6 mm in the transverse direction. All other airfield areas shall have a variation from a straight edge not greater than 6 mm in either the longitudinal or transverse direction.

b. Profilograph Testing: The finished surfaces of the pavements shall have no abrupt change of 6 mm or more, and each 0.1 km segment of each pavement lot shall have a Profile Index not greater than specified herinafter when tested with an approved California-type profilograph. Runways and taxiways shall have a Profile index not greater than 110 mm per km in the longitudinal direction. Runway and taxiway transverse smoothness shall be measured with the straight edge method and the straight edge requirements shall apply. All other airfield areas shall have a Profile Index not greater than 140 mm per km in the longitudinal direction.

c. Bumps ("Must Grind" Areas): Any bumps ("must grind" areas) shown on the profilograph trace which exceed 10 mm in height shall be reduced by diamond grinding in accordance with subparagraph "Diamond Grinding of PCC Surfaces" below until they do not exceed 7.5 mm when retested. Such grinding shall be tapered in all directions to provide smooth transitions to areas not requiring grinding.

d. Testing Method: After the concrete has hardened sufficiently to permit walking thereon, but not later than 48 hours after placement, test the entire surface of the pavement in each lot in such a manner as to reveal all surface irregularities exceeding the tolerances specified above. If any pavement areas are ground, these areas shall be retested immediately after diamond grinding. The entire area of the pavement shall be tested in both a longitudinal and a transverse direction on parallel lines. The transverse lines shall be 4.5 m or less apart, as directed. The longitudinal lines shall be at the centerline of each paving lane shown on the drawings, regardless of whether the Contractor is allowed to pave two lanes at a time, and at the 1/8th point in from each side of the lane. Other areas having obvious deviations shall also be tested. Longitudinal testing lines shall be continuous across all joints. Transverse testing lines for pilot lanes shall be carried to construction joint lines and for fill-in lanes shall be carried 600 mm across construction joints, and the readings in this area applied to the fill-in lane. Straightedge testing of the longitudinal edges of slipformed pilot lanes shall also be performed before paving fill-in lanes as specified below.

1). Straightedge Testing: The straightedge shall be held in contact with the surface and moved ahead one-half the length of the straightedge for each successive measurement. Determine the amount of surface irregularity by placing the freestanding (unleveled) straightedge on the pavement surface and measuring the

maximum gap between the straightedge and the pavement surface. Measurements shall be determined along the entire length of the straight edge.

2). Profilograph Testing: Perform profilograph testing using approved equipment and procedures described in CDT Test 526. The equipment shall utilize electronic recording and automatic computerized reduction of data to indicate "must-grind" bumps and the Profile Index for each 0.1 km segment of the pavement lot. Grade breaks on aprons shall be accomodated by breaking the profile segment into short sections and repositioning the blanking band on each section. The "blanking band" shall be 5 mm wide and the "bump template" shall span 25 mm with an offset of 10 mm. The profilograph testing of the last 9.1 m of a paving lane in the longitudinal direction from each day's paving operation shall be counted on the following day's continuation lane. The profile index shall be computed for each pass of the profilograph (3 per lane) in each 0.1 km segment. The profile index for each segment shall be the average of the profile indices for each pass in each segment. Profilographs of unequal lengths shall be scaled and proportioned to an equivalent 0.1 km as outlined in the CDT Test 526. A copy of the reduced tapes shall be furnished the Government at the end of each day's testing.

1.2.1.1 Acceptance for Smoothness

a. Straightedge Testing: Location and deviation from straightedge for all measurements shall be recorded. When 10.0 percent or more of all measurements made within a lot exceed the tolerance specified in paragraph "Smoothness Requirements" above, after any reduction of high spots or removal and replacement, the lot shall be removed and replaced at no additional cost to the Government.

b. Profilograph Testing: Location and data from all profilograph measurements shall be recorded. When the Profile Index of a 0.1 km segment of a lot exceeds the tolerance specified in paragraph "Smoothness Requirements" above by 16 mm per km or more, the lot shall be removed and replaced at no additional cost to the Government.

c. Bumps ("Must Grind" Areas): Any bumps ("must grind" areas) shown on the profilograph trace which exceed 10 mm in height shall be reduced by diamond grinding in accordance with subparagraph "Areas Defective In Plan Grade Or Smoothness" until they do not exceed 7.5 mm when retested. Such grinding shall be tapered in all directions to provide smooth transitions to areas not requiring grinding.

1.2.2 Edge Slump and Joint Face Deformation

a. Edge Slump: When slip-form paving is used, not more than 15.0 percent of the total free edge of each pavement panel shall have an edge slump exceeding 6 mm and none of the free edge of the pavement lot shall have an edge slump exceeding 9 mm. (A pavement panel is defined as a lane width by the length between two adjacent transverse contraction joints. The total free edge of the pavement will be considered to be the cumulative total linear measurement of pavement panel edge originally constructed as non-adjacent to any existing pavement; i.e., 30 m of pilot lane originally constructed as a separate lane, will have 60 m of free edge; 30 m of fill-in lane will have no

free edge, etc.,). The area affected by the downward movement of the concrete along the pavement edge shall not exceed 450 mm back from the edge.

b. Joint Face Deformation: In addition to the edge slump limits specified above, the vertical joint face shall have a surface within the maximum limits shown below:

Offset from Straightedge Applied Longitudinally To Pavement Surface	Offset from Straightedge Applied Longitudinally To Vertical Face	Offset From Straightedge Applied Top to Bottom Against the Joint Face	Abrupt Offset in Any Direction	Offset of Joint Face From True Vertical
Airfield Pavement				
3 mm	6 mm	9 mm	3 mm	8 mm/100 mm
All other Pavement				
6 mm	All other items same as airfield pavement			

c. Slump Determination: Immediately after the concrete has hardened sufficiently to permit walking thereon, the pavement surface of each lot shall be tested by the Contractor. Testing shall be performed with a minimum 4 m straightedge to reveal irregularities exceeding the edge slump tolerance specified above. The vertical edge slump shall be determined at each free edge of each slipformed paving lane constructed. The straightedge shall be placed transverse to the direction of paving and the end of the straightedge located at the edge of the paving lane. Measurements shall be made at 1.5 to 4.5 m spacings, as directed, commencing at the header where paving was started. Initially measurements shall be made at 1.5 m intervals in each lane. When no deficiencies are present, the Contracting Officer may approve an increase in the interval. When any deficiencies exist, the interval will be returned to 1.5 m. In no case shall the interval exceed 4.5 m. In addition to the transverse edge slump determination above, the Contractor, at the same time, shall check the longitudinal surface smoothness of the joint on a continuous line 25 mm back from the joint line using the 4 m straightedge advanced one-half its length for each reading. Other tests of the exposed joint face shall be made to ensure that a uniform, true vertical joint face is attained. The measurements shall be made by the Contractor, shall be properly referenced in accordance with paving lane identification and stationing, and a report given to the Contracting Officer within 24 hours after measurement is made. The report shall also identify areas requiring replacement.

d. Excessive Edge Slump: When edge slump exceeding the limits specified above is encountered on either side of the paving lane, additional straightedge measurements shall be made, if required, to define the linear limits of the excessive slump. The concrete slabs having excessive edge slump or joint deformation shall be removed and replaced to the next transverse joint in conformance with paragraph: REPAIR, REMOVAL, REPLACEMENT OF NEWLY CONSTRUCTED SLABS. Use of slip-form paving equipment and procedures that fail to consistently provide edges within the specified tolerances on edge slump and joint

face deformation shall be discontinued and the pavements shall be constructed by means of standard paving procedures using fixed forms.

1.2.3 Plan Grade

1.2.3.1 Grade Conformance Tests

Within 5 days after paving of each lot, the finished surface of the pavement area shall be tested by the Contractor, by running lines of levels at intervals corresponding with every longitudinal and transverse joint to determine the elevation at each joint intersection. The results of this survey shall be recorded and a copy given to the Government at the completion of the survey of each lot. The finished surfaces of airfield runway, taxiway, and apron pavements shall vary not more than 13 mm above or below the plan grade line or elevation indicated. The surfaces of other pavements shall vary not more than 19 mm. The above deviations from the approved grade line and elevation will not be permitted in areas where closer conformance with the planned grade and elevation is required for the proper functioning of appurtenant structures. The finished surfaces of new abutting pavements shall coincide at their juncture.

1.2.3.2 Acceptance for Plan Grade

When 10.0 percent or more of all measurements made within a lot are outside the specified tolerance, the deficient area shall be removed and replaced at no additional cost to the Government.

1.2.4 Flexural Strength

Each lot of pavement will be evaluated for acceptance in accordance with the following procedures.

a. Sampling and Testing: For acceptance, one composite sample of concrete from each sublot shall be obtained in accordance with ASTM C 172 from one batch or truckload. Test beams 152 x 152 mm shall be fabricated and cured in accordance with ASTM C 31/C 31M; and tested in accordance with ASTM C 78. Two test beams per sublot (8 per lot) shall be tested at 14 days.

b. Computations: Average the eight 14-day strength tests for the lot. The average strength shall be used in accordance with paragraph "Concrete Strength for Final Acceptance" in PART 2.

1.2.5 Thickness

Each lot of pavement will be evaluated for acceptance in accordance with the following procedure. Two cores, between 100 and 150 mm in diameter, shall be drilled from the pavement, per sublot (8 per lot). The Contractor is responsible for drilling the cores within 3 days after lot placement, filling the core holes with an approved non-shrink concrete, respraying the cored areas with curing compound, and for measuring the cores. Each core shall be inspected for voids, thickness of paste on the surface, and depth of reinforcement (if required). Provide the results with the thickness measurement data. Eight measurements of thickness shall be made around the circumference of each core and one in the center, in accordance with ASTM C 174/C 174M, using calibrated calipers for specimens longer than 250 mm. The pavement thickness from the 8 cores for the lot shall be averaged and shall be evaluated as described in below paragraph: EVALUATION FOR THICKNESS.

1.2.5.1 Drilling, Measuring, and Computations

Two cores, between 100 and 150 mm in diameter, shall be drilled from the pavement, per sublot (8 per lot). Eight measurements of thickness shall be made around the circumference of each core and one in the center, in accordance with ASTM C 174/C 174M, using calibrated calipers for specimens longer than 250 mm. The pavement thickness from the 8 cores for the lot shall be averaged and shall be evaluated as described below in paragraph EVALUATION FOR THICKNESS.

1.2.5.2 Evaluation for Thickness

Evaluation for Thickness

Deficiency in Thickness Determined by Cores millimeters	Pavements Over 200 mm Thick	Pavements Less than 200 mm Thick
0.00 to 6.0	Accept	Accept
6.5 or greater	Reject	Reject

Where rejection is indicated, the entire lot shall be removed and replaced at no additional cost to the Government. Where either of the two cores from a sublot show a thickness deficiency of 6.0 mm or greater, two more cores shall be drilled in the sublot and the average thickness of the four cores computed. If this average shows a thickness deficiency of 6.5 mm or more the entire sublot shall be removed.

1.2.6 Diamond Grinding of PCC Surfaces

In areas not meeting the specified limits for surface smoothness and plan grade, high areas shall be reduced to attain the required smoothness and grade, except as depth is limited below. High areas shall be reduced by grinding the hardened concrete with an approved diamond grinding machine after the concrete is 14 days or more old. Grinding shall be accomplished by sawing with an industrial diamond abrasive which is impregnated in the saw blades. The saw blades shall be assembled in a cutting head mounted on a machine designed specifically for diamond grinding that will produce the required texture and smoothness level without damage to the concrete pavement or joint faces. The saw blades shall be 3 mm wide and there shall be a minimum of 55 to 60 blades per 300 mm of cutting head width depending on the hardness of the aggregate. Each machine shall be capable of cutting a path 0.9 to 1.2 m wide. Grinding equipment that causes ravels, aggregate fractures, spalls or disturbance to the joints will not be permitted. The area corrected by grinding the surface of the hardened concrete shall not exceed 10 percent of the total area of any sublot. The depth of diamond grinding shall not exceed 6 mm. All pavement areas requiring plan grade or surface smoothness corrections in excess of the limits specified above, shall be removed and replaced in conformance with paragraph REPAIR, REMOVAL, REPLACEMENT OF NEWLY CONSTRUCTED SLABS. All areas in which diamond grinding has been performed will be subject to the thickness tolerances specified in paragraph: Thickness, above.

1.3 SUBMITTALS

Government approval is required for submittals with a "G" designation; submittals not having a "G" designation are for Contractor Quality Control

approval. When used, a designation following the "G" designation identifies the office that will review the submittal for the Government. Submit the following in accordance with Section 01 33 00 SUBMITTAL PROCEDURES:

SD-03 Product Data

Equipment

a. Details and data on the batching and mixing plant prior to plant assembly including manufacturer's literature showing that the equipment meets all requirements specified herein.

b. A certified copy of the NRMCA QC Manual Section 3 Concrete Plant Certification Checklist and Calibration documentation on all measuring and weighing devices, submitted prior to uniformity testing.

c. A description of the equipment proposed for transporting concrete mixture from the central mixing plant to the paving equipment.

d. A description of the equipment proposed for the machine and hand placing, consolidating and curing of the concrete mixture. Manufacturer's literature on the paver and finisher, together with the manufacturer's written instructions on adjustments and operating procedures necessary to assure a tight, smooth surface on the concrete pavement. The literature shall show that the equipment meets all details of these specifications. Detailed information on automatic laser controlled systems shall be submitted if proposed for use.

Proposed Techniques; G MED

Placing and protection methods; paving sequence; jointing pattern; data on curing equipment and profilographs; demolition of existing pavements; as specified. Pavement diamond grinding equipment and procedures.

SD-05 Design Data

Proportioning Studies; G MED

The results of the mixture proportioning studies signed and stamped by the registered professional engineer having technical responsibility for the mix design study, and submitted at least 30 days prior to commencing concrete placing operations. The results shall include a statement giving the maximum nominal coarse aggregate size and the weights and volumes of each ingredient proportioned on a one cubic meter basis. Aggregate quantities shall be based on the mass in a saturated surface dry condition. The recommended mixture proportions shall be accompanied by test results demonstrating that the proportions selected will produce concrete of the qualities indicated.

SD-06 Test Reports

Sampling and Testing; G MED

Certified copies of laboratory test reports and sources for

cement, supplementary cementitious materials (SCM), aggregates, admixtures, curing compound, epoxy, and proprietary patching materials proposed for use on this project. All aggregate tests shall have been performed no earlier than 6 months prior to contract award.

SD-07 Certificates

Contractor Quality Control Staff; G MED

American Concrete Institute certification for Contractor Quality Control staff. Qualifications and resumes for petrographer, surveyor, concrete batch plant operator, and profilograph operator.

Laboratory Accreditation; G MED

Accreditation of the commercial laboratory by an independent evaluation authority, indicating conformance to ASTM C 1077, including all applicable test procedures.

Commercial Laboratory; G MED

USACE validation letter for commercial laboratory.

1.4 QUALITY ASSURANCE

1.4.1 Contractor Quality Control Staff

All Contractor Quality Control personnel assigned to concrete construction shall be American Concrete Institute (ACI) certified in the following grade (or shall have written evidence acceptable to the Contracting Officer's representative of having completed similar qualification programs):

a. CQC personnel responsible for inspection of concrete paving operations: ACI Concrete Transportation Inspector.

b. Lead Foreman or Journeyman of the Concrete Placing, Finishing, and Curing Crews: ACI Concrete Flatwork Technician/Finisher.

c. Field Testing Technicians: ACI Concrete Field Testing Technician, Grade I.

d. Laboratory Testing Technicians: ACI Concrete Strength Testing Technician and Laboratory Testing Technician, Grade I or II.

1.4.2 Other Staff

Submit for approval, the qualifications and resumes for the following staff:

a. Petrographer: Bachelor of Science degree in geology or petrography, trained in petrographic examination of concrete aggregate according to ASTM C 294 and ASTM C 295 and trained in identification of the specific deleterious materials and tests identified in this specification. Resume shall detail the education, training and experience related to the project-specific test methods and deleterious materials and shall be submitted at least 20 days before petrographic and deleterious materials examination is to commence.

b. Licensed Surveyor: All survey work shall be performed under the

supervision of a Licensed Surveyor.

c. Concrete Batch Plant Operator: National Ready Mix Concrete Association (NRMCA) Plant Manager certification at the Plant Manager level.

d. Profilograph Operator: Certification by equipment manufacturer or a state Department of Transportation.

1.4.3 Laboratory Accreditation

Laboratory and testing facilities shall be provided by and at the expense of the Contractor. The laboratories performing the tests shall be accredited in accordance with ASTM C 1077, including ASTM C 78 and ASTM C 1260. The accreditation shall be current and shall include the required and optional test methods, as specified throughout this Section. Onsite temperature-controlled concrete curing facilities shall be provided.

a. Aggregate Testing and Mix Proportioning: Aggregate testing and mixture proportioning studies shall be performed by a commercial laboratory.

b. Acceptance Testing: Furnish all materials, labor, and facilities required for molding, curing, testing, and protecting test specimens at the site and in the laboratory. Steel molds shall be used for molding the beam specimens. Furnish and maintain boxes or other facilities suitable for storing and curing the specimens at the site while in the mold within the temperature range stipulated by ASTM C 31/C 31M. Flexural loading equipment shall be in accordance with ASTM C 78.

c. Contractor Quality Control: All sampling and testing shall be performed by an approved, onsite, independent, commercial laboratory, or for cementitious materials and admixtures, the manufacturer's laboratory.

d. Laboratory Inspection: The Government will inspect the laboratory equipment and test procedures prior to the start of concreting operations for conformance to ASTM C 1077. The laboratory shall maintain this certification for the duration of the project.

1.4.4 Preconstruction Testing of Materials

All sampling and testing shall be performed by, and at the expense of, the Contractor. Use an approved commercial laboratory or, for cementitious materials and chemical admixtures, a laboratory maintained by the manufacturer of the material. No material shall be used until notice of acceptance has been given. The Contractor will not be entitled to any additional payment or extension of time due to failure of any material to meet project requirements, or for any additional sampling or testing required. Additional tests may be performed by the Government at the discretion of the Contracting Officer; such Government testing will not relieve the Contractor of any testing responsibilities.

1.4.4.1 Aggregates

Aggregates shall be sampled in the presence of a Government Representative. Samples shall be obtained in accordance with ASTM D 75/D 75M and shall be representative of the materials to be used for the project. Test results shall be submitted 7 days before commencing

mixture proportioning studies.

1.4.4.2 Chemical Admixtures, Curing Compounds and Epoxies

At least 30 days before the material is used, submit certified copies of test results for the specific lots or batches to be used on the project. Test results shall be not more than 6 months old prior to use in the work. Chemical admixtures that have been in storage at the project site for longer than 6 months or that have been subjected to freezing will be retested at the expense of the Contractor and will be rejected if test results are not satisfactory.

1.4.4.3 Cementitious Materials

Cement and silica fume will be accepted on the basis of manufacturer's certification of compliance, accompanied by mill test reports showing that the material in each shipment meets the requirements of the specification under which it is furnished. Mill test reports shall be no more than 1 month old, prior to use in the work. No cementitious material shall be used until notice of acceptance has been given by the Contracting Officer. Cementitious material may be subjected to check testing by the Government from samples obtained at the mill, at transfer points, or at the project site. If tests prove that a cementitious material that has been delivered is unsatisfactory, it shall be promptly removed from the site of the work. Cementitious material that has not been used within 6 months after testing shall be retested at the Contractor's expense and shall be rejected if test results are not satisfactory.

1.4.5 Testing During Construction

During construction, the Contractor is responsible for sampling and testing aggregates, cementitious materials, and concrete as specified herein. The Government will sample and test concrete and ingredient materials as considered appropriate. The Contractor shall provide facilities and labor as may be necessary for procurement of representative test samples. Testing by the Government will in no way relieve the Contractor of the specified testing requirements.

1.4.6 Test Section

At least 10 days, but not more than 60 days, prior to construction of the concrete pavement, construct a test section near the job site. The Contractor shall use the test section to develop and demonstrate to the satisfaction of the Contracting Officer the proposed techniques of mixing, hauling, placing, consolidating, finishing, curing, initial saw cutting, start-up procedures, testing methods, plant operations, and the preparation of the construction joints. Variations in mixture proportions, other than water, shall be made if directed. Vary the water content, as necessary, to arrive at the appropriate content. The mixing plant shall be operated and calibrated prior to start of placing the test section. Use the same equipment, materials, and construction techniques on the test section as will be used in all subsequent work. Base course preparation, concrete production, placing, consolidating, curing, construction of joints, and all testing shall be in accordance with applicable provisions of this specification. Three days after completion of the test section, provide eight cores at least 150 mm diameter by full depth cut from points selected in the test section by the Government. The cores will be evaluated for homogeneity, consolidation and segregation. Construct the test section meeting all specification requirements and being acceptable to the

Contracting Officer in all aspects, including surface texture. Failure to construct an acceptable test section will necessitate construction of additional test sections at no additional cost to the Government. Test sections allowed to be constructed as part of the production paving which do not meet specification requirements shall be removed at the Contractor's expense. If the Contractor proposes to use slipform paving and is unable to construct an acceptable test section, the slipform paving equipment shall be removed from the job and the construction completed using stationary side forms and equipment compatible with them. Production paving shall not commence until the results on aggregates and concrete, including evaluation of the cores, and all pavement measurements for edge slump, joint face deformation, actual plan grade, surface smoothness and thickness have been submitted and approved by the Contracting Officer.

1.4.6.1 Pilot Lane

The test section shall consist of one paving lane at least 130 m long and shall be constructed to the same thickness as the thickest portion of pavement shown on the Drawings. The lane width shall be the same as that required for use in the project. The test section shall contain at least one transverse construction joint. If doweled longitudinal construction joints are required in any of the production pavements, they shall be installed full length along one side of the test strip throughout the test section. Two separate days shall be used for construction of the test section.

1.4.6.2 Fill-In Lane

The first 130 m of the initial production fill-in lane shall be considered a fill-in lane test section for purposes of testing and evaluation. All requirements for the test section are applicable, as appropriate. Obtain cores from the fill-lane lane side of the longitudinal construction joint with the pilot lane. The cores will be evaluated for homogeneity, consolidation, and segregation.

1.4.7 Acceptability of Work

The materials and the pavement itself will be accepted on the basis of tests made by the Contractor. The Government may make check tests to validate the results of the Contractor's testing. If the results of the Contractor tests vary by less than 2.0 percent of the Government's test results, the results of the Contractor's tests will be used. If the results of the Government and Contractor tests vary by 2.0 percent, but less than 4.0 percent, the average of the two will be considered the value to be used. If these vary by 4.0 percent or more, each sampling and testing procedure shall be carefully evaluated and both the Government and the Contractor shall take another series of tests on duplicate samples of material. If these vary by 4.0 percent or more, the results of the tests made by the Government shall be used and the Government will continue check testing of this item on a continuous basis until the two sets of tests agree within less than 4.0 percent on a regular basis. Testing performed by the Government will in no way at any time relieve the Contractor from the specified testing requirements.

1.4.8 Acceptance Requirements

1.4.8.1 Pavement Lots

A lot will be that quantity of construction that will be evaluated for

acceptance with specification requirements. A lot will be equal to one shift of production not to exceed 750 cubic meters. In order to evaluate thickness, each lot will be divided into four equal sublots. Grade determinations will be made on the lot as a whole. Surface smoothness determinations will be made on every 0.1 km segment in each lot. Location of all samples shall be selected on a random basis in accordance with ASTM D 3665. When operational conditions cause a lot to be terminated before the specified four sublots have been completed, the following procedure shall be used to adjust the lot size and number of tests for the lot. Where three sublots have been completed, they shall constitute a lot. Where one or two sublots have been completed, they shall be incorporated into the next lot (except for the last lot), and the total number of sublots shall be used and acceptance criteria adjusted accordingly.

1.4.8.2 Acceptance of Lots

When a lot of material fails to meet the specification requirements, that lot shall be removed and replaced. Results of strength tests shall be used to control concreting operations. Any pavement not meeting the required 'specified strength' shall be removed and replaced at no additional cost to the Government.

1.4.8.3 Evaluation

Provide all sampling and testing required for acceptance at the Contractor's expense. Individuals performing sampling, testing and inspection duties shall meet the required Qualifications. The Contracting Officer reserves the right to direct additional samples and tests for any area which appears to deviate from the specification requirements. Testing in these areas will be in addition to the sublot or lot testing, and the requirements for these areas will be the same as those for a sublot or lot. Provide facilities for and, where directed, personnel to assist in obtaining samples for any Government testing.

1.5 DELIVERY, STORAGE, AND HANDLING

1.5.1 Bulk Cementitious Materials

Furnish all cementitious material in bulk. The temperature of the cementitious material, as delivered to storage at the site, shall not exceed 65 degrees C. Sufficient cementitious materials shall be in storage to sustain continuous operation of the concrete mixing plant while the pavement is being placed. Provide separate facilities to prevent any intermixing during unloading, transporting, storing, and handling of each type of cementitious material.

1.5.2 Aggregate Materials

Store aggregate at the site of the batching and mixing plant avoiding breakage, segregation, intermixing or contamination by foreign materials. Each size of aggregate from each source shall be stored separately in free-draining stockpiles. Aggregate stored on ground shall have a minimum 0.6 m thick sacrificial layer left undisturbed. Fine aggregate and the smallest size coarse aggregate shall remain in free-draining storage for at least 24 hours immediately prior to use. Sufficient aggregate shall be maintained at the site at all times to permit continuous uninterrupted operation of the mixing plant at the time concrete pavement is being placed. Tracked equipment shall not be allowed on coarse aggregate

stockpiles.

1.5.3 Other Materials

Store reinforcing bars and accessories above the ground on supports. All materials shall be stored avoiding contamination and deterioration.

PART 2 PRODUCTS

2.1 CEMENTITIOUS MATERIALS

Cementitious materials shall be portland cement in combination with silica fume, and shall conform to appropriate specifications listed below. New submittals are requried when the cementitious materials sources or types change.

2.1.1 Portland Cement

Provide portland cement conforming to ASTM C 150/C 150M, Type I, or V, low alkali including false set requirements. Low alkali cement is required if the proposed aggregates are found to have greater than 0.04 percent expansion when tested in accordance with paragraph: Alkali-Silica Reactivity below.

2.1.2 Silica Fume

Silica fume shall conform to ASTM C 1240, including the optional limits on reactivity with cement alkalis. Silica fume may be furnished as a dry, densified material or as a slurry. Provide at the Contractor's expense the services of a manufacturer's technical representative, experienced in mixing, proportioning, placement procedures, and curing of concrete containing silica fume. This representative must be present on the project prior to and during at least the first 4 days of concrete production and placement using silica fume.

2.2 AGGREGATES

2.2.1 Aggregate Sources

2.2.1.1 Alkali-Silica Reactivity

Fine and coarse aggregates to be used in all concrete shall be evaluated and tested by the Contractor for alkali-aggregate reactivity. Both coarse aggregate size groups shall be tested.

a. The fine and coarse aggregates shall be evaluated separately, using ASTM C 1260. Test results of the individual aggregates shall have a measured expansion equal to or less than 0.08 percent after 28 days of immersion in a 1N NaOH solution. Should the test data indicate an expansion of greater than 0.08 percent, the aggregate(s) shall be rejected or additional testing using ASTM C 1567 shall be performed using the following method:

Utilize the Contractor's proposed low alkali portland cement and silica fume in combination with the proposed aggregate percentage for the test proportioning. Silica fume shall be used in the range of 7.0 percent to 9.0 percent of the total cementitious material by mass. The quantity shall be determined that will meet all the requirements of these specifications and that which will

lower the expansion equal to or less than 0.08 percent at 30 days after casting.

b. If any of the above options does not lower the expansion to less than 0.08 percent after 28 days of immersion in a 1N NaOH solution, reject the aggregate(s) and submit new aggregate sources for retesting. Submit the results of testing to the Contracting Officer for evaluation and acceptance.

2.2.1.2 Combined Aggregate Gradation

In addition to the grading requirements specified for coarse aggregate and for fine aggregate, the combined aggregate grading shall meet the following requirements:

a. The materials selected and the proportions used shall be such that when the Coarseness Factor (CF) and the Workability Factor (WF) are plotted on a diagram as described in d. below, the point thus determined shall fall within the parallelogram described therein.

b. The Coarseness Factor (CF) shall be determined from the following equation:

CF = (cumulative percent retained on the 9.5 mm sieve)(100)/(cumulative percent retained on the 2.36 mm sieve)

c. The Workability Factor WF is defined as the percent passing the 2.36 mm sieve based on the combined gradation. However, WF shall be adjusted, upwards only, by 2.5 percentage points for each 42 kg of cementitious material per cubic meter greater than 335 kg per cubic meter.

d. A diagram shall be plotted using a rectangular scale with WF on the Y-axis with units from 20 (bottom) to 45 (top), and with CF on the X-axis with units from 80 (left side) to 30 (right side). On this diagram a parallelogram shall be plotted with corners at the following coordinates (CF-75, WF-28), (CF-75, WF-40), (CF-45, WF-32.5), and (CF-45, WF-44.5). If the point determined by the intersection of the computed CF and WF does not fall within the above parallelogram, the grading of each size of aggregate used and the proportions selected shall be changed as necessary.)

2.2.2 Coarse Aggregate

2.2.2.1 Material Composition

Coarse aggregate shall consist of crushed or uncrushed gravel, crushed stone, or a combination thereof. Aggregate used for paving compass calibration hardstands shall be free of materials having undesirable magnetic properties, including magnetite in granite, high-iron minerals in traprock, and pyrite in limestone. Coarse aggregate used for paving power check pads shall be limestone, dolomite, basalt or other approved low-silica content aggregate which will not cause thermal distress from jet blast. Aggregates, as delivered to the mixers, shall consist of clean, hard, uncoated particles meeting the requirements of ASTM C 33/C 33M except as specified herein. Coarse aggregate shall be washed. Washing shall be sufficient to remove dust and other coatings. Coarse aggregate shall not show more than 40 percent loss when subjected to the Los Angeles abrasion

test in accordance with ASTM C 131. The sodium sulfate soundness loss shall not exceed 12 percent, or the magnesium sulfate soundness loss shall not exceed 18 percent after five cycles when tested in accordance with ASTM C 88.

2.2.2.2 Particle Shape Characteristics

Particles of the coarse aggregate shall be generally spherical or cubical in shape. The quantity of flat and elongated particles in any size group coarser than the 9.5 mm sieve shall not exceed 20 percent by weight as determined by the Flat Particle Test and the Elongated Particle Test of ASTM D 4791. A flat particle is defined as one having a ratio of width to thickness greater than 3; an elongated particle is one having a ratio of length to width greater than 3.

2.2.2.3 Size and Grading

The nominal maximum size of the coarse aggregate shall be 37.5 mm. The coarse aggregates shall be graded and furnished in two size groups meeting the individual grading requirements of ASTM C 33, Size No. 4 (37.5 to 19.0 mm) and Size No. 67 (19.0 to 4.75 mm).

2.2.2.4 Deleterious Materials - Airfield Pavements

The amount of deleterious material in each size group of coarse aggregate shall not exceed the limits shown in Table 5 below, determined in accordance with the test methods shown.

TABLE 5
LIMITS OF DELETERIOUS MATERIALS IN COARSE AGGREGATE
FOR AIRFIELD PAVEMENTS
Percentage by Mass

Materials [h]	
Clay lumps and friable particles (ASTM C 142)	0.2
Shale (a) (ASTM C 295)	0.2
Material finer than 0.075 mm (No. 200 sieve) (b) (ASTM C 117)	0.5
Lightweight particles (c) (ASTM C 123)	0.2
Clay ironstone (d) (ASTM C 295)	0.5
Chert and cherty stone (less than 2.40 Mg/cubic meter density SSD (2.40 Sp. Gr.)) (e) (ASTM C 123) and ASTM C 295)	0.5
Claystone, mudstone, and	0.1

TABLE 5
LIMITS OF DELETERIOUS MATERIALS IN COARSE AGGREGATE
FOR AIRFIELD PAVEMENTS
Percentage by Mass

Materials [h]	
siltstone (f) (ASTM C 295)	
Shaly and argillaceous limestone (g) (ASTM C 295)	0.2
Other soft particles (COE CRD-C 130)	1.0
Total of all deleterious substances exclusive of material finer than 0.075 mm (No. 200 sieve)	2.0

a. Shale is defined as a fine-grained, thinly laminated or fissile sedimentary rock. It is commonly composed of clay or silt or both. It has been indurated by compaction or by cementation, but not so much as to have become slate.

b. Limit for material finer than 0.075 mm (No. 200 sieve) will be increased to 1.5 percent for crushed aggregates if the fine material consists of crusher dust that is essentially free from clay or shale. Use ASTM D 2419, if required, to differentiate between crusher dust and clay/shale.

c. The separation medium shall have a density of 2.0 Mg/cubic meter (Sp. Gr. of 2.0). This limit does not apply to coarse aggregate manufactured from blast-furnace slag unless contamination is evident.

d. Clay ironstone is defined as an impure variety of iron carbonate, iron oxide, hydrous iron oxide, or combinations thereof, commonly mixed with clay, silt, or sand. It commonly occurs as dull, earthy particles, homogeneous concretionary masses, or hard-shell particles with soft interiors. Other names commonly used for clay ironstone are "chocolate bars" and limonite concretions.

e. Chert is defined as a rock composed of quartz, chalcedony or opal, or any mixture of these forms of silica. It is variable in color. The texture is so fine that the individual mineral grains are too small to be distinguished by the unaided eye. Its hardness is such that it scratches glass but is not scratched by a knife blade. It may contain impurities such as clay, carbonates, iron oxides, and other minerals. Cherty stone is defined as any type of rock (generally limestone) that contains chert as lenses and nodules, or irregular masses partially or completely replacing the original stone.

f. Claystone, mudstone, or siltstone, is defined as a massive fine-grained sedimentary rock that consists predominantly of indurated clay or silt without laminations or fissility. It may be indurated either by compaction or by cementation.

g. Shaly limestone is defined as limestone in which shale occurs as one or more thin beds or laminae. These laminae may be regular or very irregular and may be spaced from a few inches down to minute fractions of an inch. Argillaceous limestone is defined as a limestone in which clay minerals occur disseminated in the stone in the amount of 10 to 50 percent by weight of the rock; when these make up from 50 to 90 percent, the rock is known as calcareous (or dolomitic) shale (or claystone, mudstone, or siltstone).

h. Testing shall be performed in accordance with the referenced test methods, except that the minimum sample size shall be as specified below.

2.2.2.5 Testing Sequence/Deleterious Materials - Airfields Only

The Contractor will not be entitled to any extension of time or additional payment due to any delays caused by the testing, evaluation, or personnel requirements. The size of the coarse aggregate sample shall be at least 90 kg for the 19 mm and larger maximum size and 12 kg for the 4.75 to 19 mm coarse aggregate and 5 kg for the fine aggregate. Provide facilities for the ready procurement of representative test samples. The testing procedure on each sample of coarse aggregate for compliance with limits on deleterious materials shall be as follows:

Step 1: Wash each full sample of coarse aggregate for material finer than the 0.075 mm sieve. Discard material finer than the 0.075 mm sieve.

Step 2: Test remaining full sample for clay lumps and friable particles and remove.

Step 3: Test remaining full sample for lightweight particles (Sp.Gr.2.0) and remove.

Step 4. Test remaining full sample for chert and/or cherty stone with SSD density of less than 2.40 Mg/cubic meter (Sp. Gr. 2.40). Remove lightweight chert and/or cherty stone. Restore other materials less than 2.40 to the sample.

Step 5: Test remaining sample for clay-ironstone, shale, claystone, mudstone, siltstone, shaly and/or argillaceous limestone, and remove.

Step 6: Test approximately one-fifth of remaining full sample for other soft particles.

2.2.3 Fine Aggregate

2.2.3.1 Composition

Fine aggregate shall consist of natural sand, manufactured sand, or a combination of the two, and shall be composed of clean, hard, durable particles meeting the requirements of ASTM C 33/C 33M. Aggregate used for paving compass calibration hardstands shall be free of materials having undesirable magnetic properties, including magnetite in granite, high-iron minerals in traprcok, and pyrite in limestone. Each type of fine aggregate shall be stockpiled and batched separately. Particles of the fine aggregate shall be generally spherical or cubical in shape.

2.2.3.2 Grading

Grading of the fine aggregate, as delivered to the mixer, shall conform to the requirements of ASTM C 33/C 33M and shall have a fineness modulus of not less than 2.50 nor more than 3.00.

2.2.3.3 Deleterious Material

The amount of deleterious material in the fine aggregate shall not exceed the following limits by mass:

Material	Percentage by Mass
Clay lumps and friable particles ASTM C 142	1.0
Material finer than 0.075 mm (No. 200 sieve) ASTM C 117	3.0
Lightweight particles ASTM C 123 using a medium with a density of 2.0 Mg/cubic meter (Sp. Gr. of 2.0))	0.5
Total of all above	3.0

2.3 CHEMICAL ADMIXTURES

2.3.1 General Requirements

Chemical admixtures may only be used when the specific admixture type and manufacturer is the same material used in the mixture proportioning studies. The air-entraining admixture shall conform to ASTM C 260. An accelerator conforming to ASTM C 494/C 494M, Type C, may be used only when specified in paragraph: SPECIFIED CONCRETE STRENGTH AND OTHER PROPERTIES below and shall not be used to reduce the amount of cementitious material used. Calcium chloride and admixtures containing calcium chloride shall not be used. Retarding or water-reducing admixture shall meet the requirements of ASTM C 494/C 494M, Type F and G, except that the 6-month and 1-year compressive strength tests are waived. ASTM C 1017/C 1017M flowable admixtures shall not be used.

2.3.2 High Range Water Reducing Admixture (HRWRA)

A high-range water-reducing admixture shall meet the requirements of ASTM C 494/C 494M, Type F or G. The HRWRA shall be free from chlorides, alkalies, and shall be of the synthesized, sulfonated complex polymer type. The HRWRA shall be added to the concrete as a single component at the batch plant. The admixture shall be added to the concrete mixture only when its use is approved or directed, and only when it has been used in mixture proportioning studies to arrive at approved mixture proportions. Submit certified copies of the independent laboratory test results required for compliance with ASTM C 494/C 494M.

2.4 MEMBRANE FORMING CURING COMPOUND

Membrane forming curing compound shall be a white pigmented compound conforming to COE CRD-C 300.

2.5 WATER

Water for mixing and curing shall be fresh, clean, potable, and free of

injurious amounts of oil, acid, salt, or alkali, except that non-potable water, or water from concrete production operations, may be used if it meets the requirements of ASTM C 1602/C 1602M.

2.6 JOINT MATERIALS

2.6.1 Expansion Joint Material

Expansion joint filler shall be a preformed material conforming to ASTM D 1751 or ASTM D 1752 Type II or III. Expansion joint filler shall be 19 mm thick, unless otherwise indicated, and shall be furnished in a single full depth piece.

2.6.2 Slip Joint Material

Slip joint material shall be 6 mm thick expansion joint filler, unless otherwise indicated, conforming to para: Expansion Joint Material.

2.7 REINFORCING

All reinforcement shall be free from loose, flaky rust, loose scale, oil, grease, mud, or other coatings that might reduce the bond with concrete. Removal of thin powdery rust and tight rust is not required. However, reinforcing steel which is rusted to the extent that it does not conform to the required dimensions or mechanical properties shall not be used.

2.7.1 Reinforcing Bars and Bar Mats

Reinforcing bars shall conform to ASTM A 615/A 615M, billet-steel or ASTM A 996/A 996M, rail and axle steel, Grade 60. Bar mats shall conform to ASTM A 184/A 184M. The bar members may be billet rail or axle steel.

2.7.2 Welded Wire Reinforcement

Welded Wire Reinforcement shall be deformed or smooth, conforming to ASTM A 497/A 497Mor ASTM A 185/A 185M, and shall be furnished in flat sheets.

2.8 DOWELS

2.8.1 Dowels

Dowels shall be single piece bars fabricated or cut to length at the shop or mill before delivery to the site. Dowels shall be free of loose, flaky rust and loose scale and shall be clean and straight. Dowels may be sheared to length provided that the deformation from true shape caused by shearing does not exceed 1 mm on the diameter of the dowel and does not extend more than 1 mm from the end of the dowel. Dowels shall be plain (non-deformed) steel bars conforming to ASTM A 615/A 615M, Grade 40 or 60; ASTM A 996/A 996M, Grade 50 or 60. Dowel bars shall be epoxy coated in conformance with ASTM A 775/A 775M. Grout retention rings shall be fully circular metal or plastic devices capable of supporting the dowel until the epoxy hardens. Dowel sleeves or inserts are not permitted.

2.8.2 Dowel Bar Assemblies

Dowel bar assemblies shall consist of a framework of metal bars or wires arranged to provide rigid support for the dowels throughout the paving operation, with a minimum of four continuous bars or wires extending along

the joint line. The dowels shall be welded to the assembly or held firmly by mechanical locking arrangements that will prevent them from rising, sliding out, or becoming distorted during paving operations.

2.9 EPOXY RESIN

All epoxy-resin materials shall be two-component materials conforming to the requirements of ASTM C 881/C 881M, Class as appropriate for each application temperature to be encountered, except that in addition, the materials shall meet the following requirements:

a. Material for use for embedding dowels and anchor bolts shall be Type IV, Grade 3.

b. Material for use as patching materials for complete filling of spalls and other voids and for use in preparing epoxy resin mortar shall be Type III, Grade as approved.

c. Material for use for injecting cracks shall be Type IV, Grade 1.

d. Material for bonding freshly mixed portland cement concrete or mortar or freshly mixed epoxy resin concrete or mortar to hardened concrete shall be Type V, Grade as approved.

2.10 EQUIPMENT

All plant, equipment, tools, and machines used in the work shall be maintained in satisfactory working conditions at all times.

2.10.1 Batching and Mixing Plant

a. Location: The batching and mixing plant shall be the Contractor's responsibility and its location shall be subject to the Contracting Officer's approval. There shall be operable telephonic or radio communication between the plant and the placing site at all times concreting is taking place.

b. Type and Capacity: The batching and mixing plant shall be a stationary-type central mix plant, including permanent installations or portable/relocatable plants installed on stable foundations. The plant shall be designed and operated to produce concrete within the specified tolerances, and shall have a capacity of at least 200 cubic meters per hour. The batching and mixing plant shall conform to the requirements of NRMCA QC 3 including provisions addressing:

1. Material Storage and Handling
2. Batching Equipment
3. Central Mixer
4. Ticketing System
5. Delivery System

c. Tolerances: The following tolerances shall apply.

Materials	Percentage of Required Mass
Cementitious Materials	plus or minus 1
Aggregate	plus or minus 2
Water	plus or minus 1

Materials	Percentage of Required Mass
Admixture	plus or minus 3

For volumetric batching equipment for water and admixtures, the above numeric tolerances shall apply to the required volume of material being batched. Concentrated admixtures shall be uniformly diluted, if necessary, to provide sufficient volume per batch to ensure that the batchers will consistently operate within the above tolerance.

d. Moisture Control: The plant shall be capable of ready adjustment to compensate for the varying moisture contents of the aggregates and to change the quantities of the materials being batched. An electric moisture meter complying with the provisions of COE CRD-C 143 shall be provided for measuring of moisture in the fine aggregate. The sensing element shall be arranged so that measurement is made near the batcher charging gate of the fine aggregate bin or in the fine aggregate batcher.

2.10.2 Concrete Mixers

a. General: Mixers shall be stationary or truck mixers. Mixers shall be capable of combining the materials into a uniform mixture and of discharging this mixture without segregation. The mixers shall not be charged in excess of the capacity recommended by the manufacturer. The mixers shall be operated at the drum or mixing blade speed designated by the manufacturer. The mixers shall be maintained in satisfactory operating condition, and the mixer drums shall be kept free of hardened concrete. Mixer blades or paddles shall be replaced when worn down more than 10 percent of their depth when compared with the manufacturer's dimension for new blades or paddles.

b. Stationary: Stationary mixers shall be drum or pan mixers. Mixers shall be provided with an acceptable device to lock the discharge mechanism until the required mixing time has elapsed.

c. Mixing Time and Uniformity for Stationary Mixers: For stationary mixers, before uniformity data are available, the mixing time for each batch after all solid materials are in the mixer, provided that all of the mixing water is introduced before one-fourth of the mixing time has elapsed, shall be 1 minute for mixers having a capacity of 0.75 cubic meter. For mixers of greater capacity, this minimum time shall be increased 20 seconds for each additional cubic meter or fraction thereof. After results of uniformity tests are available, the mixing time may be reduced to the minimum time required to meet uniformity requirements; but if uniformity requirements are not being met, the mixing time shall be increased as directed. The mixing time for full batch production shall be a minimum of 75 seconds. Mixer performance tests at new mixing times shall be performed immediately after any change in mixing time. The Regular Test sequence shall be conducted for initial determination of the mixing time or as directed. When regular testing is performed, the concrete shall meet the limits of any five of the six uniformity requirements listed in Table 1 below.

d. The Abbreviated Test sequence shall be conducted for production concrete verification at the frequency specified in Table 1. When abbreviated testing is performed, the concrete shall meet only those

requirements listed for abbreviated testing. The concrete proportions used for uniformity tests shall be as used on the project. Regular testing shall consist of performing all six tests on three batches of concrete. The range for regular testing shall be the average of the ranges of the three batches. Abbreviated testing shall consist of performing the three required tests on a single batch of concrete. The range for abbreviated testing shall be the range for one batch. If more than one mixer is used and all are identical in terms of make, type, capacity, condition, speed of rotation, etc., the results of tests on one of the mixers shall apply to the others, subject to the approval of the Contracting Officer. All mixer performance (uniformity) testing shall be performed in accordance with COE CRD-C 55 and with paragraph titled TESTING AND INSPECTION FOR CONTRACTOR QUALITY CONTROL in PART 3.

TABLE 1
UNIFORMITY REQUIREMENTS--STATIONARY MIXERS

Parameter	Regular Tests Allowable Maximum Range for Average of 3 Batches	Abbreviated Tests Allowable Maximum Range for 1 Batch
Unit weight of air-free mortar	32 kg/cubic m	32 kg/cubic m
Air content	1.0 percent	--
Slump	25 mm	25 mm
Coarse aggregate	6.0 percent	6.0 percent
Compressive strength at 7 days,	10.0 percent	10.0 percent
Water content	1.5 percent	

e. Truck: Truck mixers shall not be used for mixing or transporting slipformed paving concrete. The only truck mixers used for mixing or transporting paving concrete shall be those designed with extra large blading and rear opening specifically for low-slump paving concrete. Truck mixers, the mixing of concrete therein, and concrete uniformity and testing thereof shall conform to the requirements of ASTM C 94/C 94M. The number of revolutions between 70 to 100 for truck-mixed concrete and the number of revolutions for shrink-mixed concrete shall be determined by uniformity tests as specified in ASTM C 94/C 94M and in requirements for mixer performance stated in paragraph TESTING AND INSPECTION FOR CONTRACTOR QUALITY CONTROL in PART 3. If requirements for the uniformity of concrete are not met with 100 revolutions of mixing after all ingredients including water are in the truck mixer drum, the mixer shall not be used until the condition is corrected. Water shall not be added after the initial introduction of mixing water except, when on arrival at the job site, the slump is less than specified and the water-cement ratio is less than that given as a maximum in the approved mixture. Additional water may be added to bring the slump within the specified range provided the approved water-cement ratio is not exceeded. Water shall be injected into the head of the mixer (end opposite the discharge opening) drum under

pressure, and the drum or blades shall be turned a minimum of 30 additional revolutions at mixing speed. Water shall not be added to the batch at any later time. Mixer performance (uniformity) tests for truck mixers shall be made in accordance with ASTM C 94/C 94M.

2.10.3 Transporting Equipment

Slipform concrete shall be transported to the paving site in nonagitating equipment conforming to ASTM C 94/C 94M or in approved agitators. Fixed form concrete shall be transported in approved truck mixers designed with extra large blading and rear opening specifically for low slump concrete. All transporting equipment shall be designed and operated to deliver and discharge the required concrete mixture completely without segregation.

2.10.4 Transfer and Spreading Equipment

Equipment for transferring concrete from the transporting equipment to the paving lane in front of the paver shall be specially manufactured, self-propelled transfer equipment which will accept the concrete outside the paving lane and will transfer and spread it evenly across the paving lane in front of the paver and strike off the surface evenly to a depth which permits the paver to operate efficiently.

2.10.5 Paver-Finisher

a. General: The paver-finisher shall be a heavy-duty, self-propelled machine designed specifically for paving and finishing high quality pavement. The paver-finisher shall weigh at least 3280 kg/m of lane width, and shall be powered by an engine having at least 15,000 W/m of lane width. The paver-finisher shall spread, consolidate, and shape the plastic concrete to the desired cross section in one pass. The mechanisms for forming the pavement shall be easily adjustable in width and thickness and for required crown. In addition to other spreaders required by paragraph above, the paver-finisher shall be equipped with a full width knock-down auger or paddle mechanism, capable of operating in both directions, which will evenly spread the fresh concrete in front of the screed or extrusion plate.

b. Vibrators: Immersion vibrators shall be gang mounted at the front of the paver on a frame equipped with suitable controls so that all vibrators can be operated at any desired depth within the slab or completely withdrawn from the concrete, as required. The vibrators shall be automatically controlled so that they will be immediately stopped as forward motion of the paver ceases. The paver-finisher shall be equipped with an electronic vibrator monitoring device displaying the operating frequency of each individual internal vibrator. The monitoring device shall have a readout display visible to the paver operator. It shall operate continuously while paving, and shall display all vibrator frequencies with manual or automatic sequencing among all individual vibrators. The spacing of the immersion vibrators across the paving lane shall be as necessary to properly consolidate the concrete, but the clear distance between vibrators shall not exceed 750 mm. The outside vibrators shall not be more than 300 mm from the lane edge. Spud vibrators shall operate at a frequency of not less than 135 Hz and an amplitude of not less than 0.75 mm, as determined by COE CRD-C 521.

c. Screed or Extrusion Plate: The paver-finisher shall be equipped with a transversely oscillating screed or an extrusion plate to shape,

compact, and smooth the surface and shall so finish the surface that no significant amount of hand finishing, except use of cutting straightedges, is required. The screed or extrusion plate shall be constructed to provide adjustment for crown in the pavement. The entire machine shall provide adjustment for variation in lane width or thickness and to prevent more than 200 mm of the screed or extrusion plate extending over previously placed concrete on either end when paving fill-in lanes. Machines that cause displacement of properly installed forms or cause ruts or indentations in the prepared underlying materials and machines that cause frequent delays due to mechanical failures shall be replaced as directed.

d. Fixed Forms: The paver-finisher shall be equipped with wheels designed to ride the forms, keep it aligned with the forms, and spread the load so as to prevent deformation of the forms. Paver-finishers travelling on guide rails located outside the paving lane shall be equiped with wheels when travelling on new or existing concrete to remain.

e. Slipform: The slipform paver-finisher shall be automatically controlled and crawler mounted with padded tracks so as to be completely stable under all operating conditions. The paver-finisher shall finish the surface and edges so that no edge slump beyond allowable tolerance occurs. Suitable moving side forms shall be provided that are adjustable and will produce smooth, even edges, perpendicular to the top surface and meeting specification requirements for alignment and freedom from edge slump.

f. Longitudinal Mechanical Float: A longitudinal mechanical float shall be specially designed and manufactured to smooth and finish the pavement surface without working excess paste to the surface. It shall be rigidly attached to the rear of the paver-finisher or to a separate self-propelled frame spanning the paving lane. The float plate shall be at least 1.5 m long by 200 mm wide and shall automatically be oscillated in the longitudinal direction while slowly moving from edge to edge of the paving lane, with the float plate in contact with the surface at all times.

g. Nonrotating Pipe Float: A pipe float if used, shall be a nonrotating pipe 150 to 250 mm in diameter and sufficiently long to span the full paving width when oriented at an angle of approximately 60 degrees with the centerline. The pipe float shall be mounted on a self-propelled frame that spans the paving lane. No means of applying water to the surface shall be incorporated in the pipe float.

h. Other Types of Finishing Equipment: Clary screeds, other rotating tube floats, or bridge deck finishers are not allowed on mainline paving, but may be allowed on irregular or odd-shaped slabs, and near buildings or trench drains, subject to the Contracting Officer's approval. Bridge deck finishers shall have a minimum operating weight of 3400 kg and shall have a transversely operating carriage containing a knock-down auger and a minimum of two immersion vibrators. Vibrating screeds or pans shall be used only for isolated slabs where hand finishing is permitted as specified, and only where specifically approved.

2.10.6 Curing Equipment

Equipment for applying membrane-forming curing compound shall be mounted on

a self-propelled frame that spans the paving lane. The reservoir for curing compound shall be constantly mechanically (not air) agitated during operation and shall contain means for completely draining the reservoir. The spraying system shall consist of a mechanically powered pump which will maintain constant pressure during operation, an operable pressure gauge, and either a series of spray nozzles evenly spaced across the lane to give uniformly overlapping coverage or a single spray nozzle which is mounted on a carriage which automatically traverses the lane width at a speed correlated with the forward movement of the overall frame. All spray nozzles shall be protected with wind screens. Calibrate the spraying system in accordance with ASTM D 2995, Method A, for the rate of application required in paragraph: Membrane Curing. Any hand-operated sprayers allowed by that paragraph shall be compressed air supplied by a mechanical air compressor. If the curing equipment fails to apply an even coating of compound at the specified rate, it shall immediately be replaced.

2.10.7 Texturing Equipment

a. General: Texturing equipment shall be as specified below. Before use, the texturing equipment shall be demonstrated on a test section, and the equipment shall be modified as necessary to produce the texture directed.

b. Burlap Drag: A burlap drag shall be securely attached to a separate wheel mounted frame spanning the paving lane or to one of the other similar pieces of equipment. Length of the material shall provide 600 to 900 mm dragging flat on the pavement surface. Width shall be at least equal to the width of the slab. The material shall be clean, reasonably new burlap, completely saturated with water before attachment to the frame, always resaturated before start of use, and kept clean and saturated during use. Burlap shall conform to AASHTO M 182, Class 3 or 4.

2.10.8 Sawing Equipment

Equipment for sawing joints and for other similar sawing of concrete shall be standard diamond-type concrete saws mounted on a wheeled chassis which can be easily guided to follow the required alignment. Blades shall be diamond tipped. If demonstrated to operate properly, abrasive blades may be used. Provide spares as required to maintain the required sawing rate. Wheel saws used in the removal of concrete shall be saws with large diameter tungsten carbide tipped blades mounted on a heavy-duty chassis which will produce a saw kerf at least 40 mm wide. All saws shall be capable of sawing to the full depth required. Early-entry saws may be used, subject to demonstration and approval of the Contracting Officer. No change to the initial sawcut depth shall be permitted.

2.10.9 Straightedge

Furnish and maintain at the job site, in good condition, one 4 m straightedge for each paving train for testing the hardened portland cement concrete surfaces. These straightedges shall be constructed of aluminum or magnesium alloy and shall have blades of box or box-girder cross section with flat bottom, adequately reinforced to insure rigidity and accuracy. Straightedges shall have handles for operation on the pavement.

2.11 SPECIFIED CONCRETE STRENGTH AND OTHER PROPERTIES

2.11.1 Specified Flexural Strength

Specified flexural strength, R, for concrete is 3.8 MPa at 28 days, as determined by tests made in accordance with ASTM C 78 of beams fabricated and cured in accordance with ASTM C 192/C 192M, Maximum allowable water-cementitious material ratio is 0.45. The water-cementitious material ratio will be the equivalent water-cement ratio as determined by conversion from the weight ratio of water to cement plus silica fume by the mass equivalency method described in ACI 211.1. The concrete shall be air-entrained with a total air content of 4.0 plus or minus 1.5 percentage points, at the point of placement. Air content shall be determined in accordance with ASTM C 231. The maximum allowable slump of the concrete at the point of placement shall be 50 mm for pavement constructed with fixed forms. For slipformed pavement, at the start of the project, select a maximum allowable slump which will produce in-place pavement meeting the specified tolerances for control of edge slump. The selected slump shall be applicable to both pilot and fill-in lanes.

2.11.2 Concrete Temperature

The temperature of the concrete as delivered shall conform to the requirements of paragraphs, Paving in Hot Weather and Paving in Cold Weather, in PART 3. Temperature of concrete shall be determined in accordance with ASTM C 1064/C 1064M.

2.11.3 Concrete Strength for Final Acceptance

The strength of the concrete will be considered acceptable when the equivalent 28-day flexural strengths for each lot are above the'Specified Flexural Strength' as determined by correlation with 14-day flexural strength tests specified in paragraph: "Mixture Proportioning for Flexural Strength" below, and no individual set (2 specimens per sublot) in the lot are 170 kPa or more below the equivalent 'Specified Flexural Strength'. If any lot or sublot, respectively, fails to meet the above criteria, the lot or sublot shall be removed and replaced at no additional cost to the Government. This is in addition to and does not replace the average strength required for day-to-day CQC operations as specified in paragraph: Average CQC Flexural Strength Required for Mixtures, below.

2.12 MIXTURE PROPORTIONS

2.12.1 Composition

Concrete shall be composed of cementitious material, water, fine and coarse aggregates, and admixtures. The cementitious materials shall be portland cement in combination with silica fume. Silica fume shall consist of not less than 7.0 percent of the cementitious material by mass and not more than 9.0 percent. The total cementitious materials content shall be at least 390 kg/cubic meter. Admixtures shall consist of air entraining admixture and high-range water reducing admixture (HRWR). The HRWR shall be used only at the dosage determined during mixture proportioning studies.

2.12.2 Proportioning Studies

Trial design batches, mixture proportioning studies, and testing requirements are the responsibility of the Contractor. Trial mixtures having proportions, slumps, and air content suitable for the work shall be

based on methodology described in ACI 211.1, modified as necessary to accommodate flexural strength. Submit test results including:

a. Coarse and fine aggregate gradations and plots.
b. Combined aggregate gradation and coarseness/workability plots.
c. Coarse aggregate quality test results, include deleterious materials.
d. Fine aggregate quality test results.
e. Mill certificates for cement and supplemental cementitious materials.
f. Certified test results for air entraining, water reducing, retarding, non-chloride accelerating admixtures.
g. Specifed flexural strength, slump, and air content.
h. Documentation of required average CQC flexural strength, Ra.
i. Recommended proportions/volumes for proposed mixture and each of three trial water-cementitious materials ratios.
j. Individual beam breaks.
k. Flexural strength summaries and plots.
l. Correlation ratios for acceptance testing and CQC testing.
m. Historical record of test results, documenting production standard deviation (if available).

2.12.2.1 Water-Cement Ratio

At least three different water-cement ratios, which will produce a range of strength encompassing that required on the project, shall be used. The maximum allowable water-cement ratio required in paragraph: Specified Flexural Strength, above will be the equivalent water-cement ratio. Laboratory trial mixtures shall be proportioned for maximum permitted slump and air content.

2.12.2.2 Trial Mixture Studies

Separate sets of trial mixture studies shall be made for each combination of cementitious materials and each combination of admixtures proposed for use. No combination of either shall be used until proven by such studies, except that, if approved in writing and otherwise permitted by these specifications, an accelerator or a retarder may be used without separate trial mixture study. Separate trial mixture studies shall also be made for concrete for each placing method (slip form, fixed form, or hand placement) proposed. The temperature of concrete in each trial batch shall be reported. Each mixture shall be designed to promote easy and suitable concrete placement, consolidation and finishing, and to prevent segregation and excessive bleeding.

2.12.2.3 Mixture Proportioning for Flexural Strength

The following step by step procedure shall be followed:

a. Fabricate all beams for each mixture from the same batch or blend of batches. Fabricate and cure all beams in accordance with ASTM C 192/C 192M, using 152 x 152 mm steel beam forms.

b. Cure test beams from each mixture for 3, 7, 14, and 28-day flexural tests; 6 beams to be tested per age.

c. Test beams in accordance with ASTM C 78.

d. Using the average strength for each w/c at each age, plot all results from each of the three mixtures on separate graphs for w/c versus:

3-day flexural strength
5-day flexural strength
7-day flexural strength
14-day flexural strength
28-day flexural strength

e. From these graphs select a w/c that will produce a mixture giving a 28-day flexural strength equal to the required strength determined in accordance with the next paragraph.

f. Using the above selected w/c, select from the graphs the expected 3, 5, 7, and 14-day flexural strengths.

g. From the above expected strengths for the selected mixture, determine the Ratio of the 7-day flexural strength of the selected mixture to the 28-day flexural strength of the mixture (for CQC control).

h. From the above expected strengths for the selected mixture, determine the Ratio of the 14-day flexural strength of the selected mixture to the 28-day flexural strength of the mixture (for acceptance).

i. If there is a change in materials, additional mixture design studies shall be made using the new materials and new Correlation Ratios shall be determined.

j. No concrete pavement shall be placed until the Contracting Officer has approved the Contractor's mixture proportions. The approved water-cementitious materials ratio shall not exceed the maximum value specified in paragraph: Specified Flexural Strength, above and shall not be increased without the Contracting Officer's written approval.

2.12.3 Average CQC Flexural Strength Required for Mixtures

In order to ensure meeting the strength requirements specified in paragraph: SPECIFIED CONCRETE STRENGTH AND OTHER PROPERTIES above, during production, the mixture proportions selected during mixture proportioning studies and used during construction shall produce a required average CQC flexural strength exceeding the specified strength, R, by the amount indicated below. This required average CQC flexural strength, Ra, will be used only for CQC operations as specified in paragraph: TESTING AND INSPECTION FOR CONTRACTOR QUALITY CONTROL in PART 3 and as specified in the previous paragraph. During production, the required Ra shall be adjusted , as appropriate and as approved, based on the standard deviation of average 28-day strengths being attained during paving.

a. From Previous Test Records: Where a concrete production facility has previous test records current to within 18 months, a standard deviation shall be established in accordance with the applicable provisions of ACI 214R. Test records from which a standard deviation is calculated shall represent materials, quality control procedures, and conditions similar to those expected, shall represent concrete produced to meet a specified flexural strength or strengths within 1 MPa of the 28-day flexural strength specified for the proposed work, and shall consist of at least 30 consecutive tests. Perform verification testing, as directed by the Contracting Officer, to document the current strength. A strength test shall be the average of the strengths of two specimens made from the same sample of concrete and

tested at 28 days. Required average CQC flexural strength, Ra, used as the basis for selection of concrete proportions shall be the value from the equation that follows, using the standard deviation as determined above:

$$Ra = R + 1.34S$$

Where: S = standard deviation
R = specified flexural strength
Ra = required average flexural strength

Where a concrete production facility does not have test records meeting the requirements above but does have a record based on 15 to 29 consecutive tests, a standard deviation shall be established as the product of the calculated standard deviation and a modification factor from the following table:

NUMBER OF TESTS	MODIFICATION FACTOR FOR STANDARD DEVIATION
15	1.16
20	1.08
25	1.03
30 or more	1.00

b. Without Previous Test Records: When a concrete production facility does not have sufficient field strength test records for calculation of the standard deviation, the required average strength, Ra, shall be determined by adding 15 percent to the specified flexural strength, R.

PART 3 EXECUTION

3.1 PREPARATION FOR PAVING

Before commencing paving, perform the following. If used, forms shall be in place, cleaned, coated, and adequately supported. Any reinforcing steel needed shall be at the paving site. All transporting and transfer equipment shall be ready for use, clean, and free of hardened concrete and foreign material. Equipment for spreading, consolidating, screeding, finishing, and texturing concrete shall be at the paving site, clean and in proper working order. All equipment and material for curing and for protecting concrete from weather or mechanical damage shall be at the paving site, in proper working condition, and in sufficient amount for the entire placement.

3.1.1 Weather Prevention

When windy conditions during paving appear probable, equipment and material shall be at the paving site to provide windbreaks, shading, fogging, or other action to prevent plastic shrinkage cracking or other damaging drying of the concrete.

3.1.2 Proposed Techniques

Submit for approval the following items:

a. A description of the placing and protection methods proposed when concrete is to be placed in or exposed to hot, cold, or rainy weather conditions.

b. A detailed paving sequence plan and proposed paving pattern showing all planned construction joints; transverse and longitudinal dowel bar spacing; and identifying pilot lanes and hand placement areas. No deviation from the jointing pattern shown on the drawings shall be made without written approval of the government (TAM).

c. Plan and equipment proposed to control alignment of sawn joints within the specified tolerances.

d. Data on the curing equipment, media and methods to be used.

e. Data on profilograph and methods to measure pavement smoothness.

f. Pavement demolition work plan, presenting the proposed methods and equipment to remove existing pavement and protect pavement to remain in place.

3.2 CONDITIONING OF UNDERLYING MATERIAL

3.2.1 General Procedures

Underlying material, upon which concrete is to be placed shall be clean, damp, and free from debris, waste concrete or cement, frost, ice, and standing or running water. Prior to setting forms or placement of concrete, the underlying material shall be well drained and shall have been satisfactorily graded by string-line controlled, automated, trimmer/fine grader and uniformly compacted in accordance with the applicable Section of these specifications. The surface of the underlying material shall be tested as to crown, elevation, and density in advance of setting forms or of concrete placement using slip-form techniques. High areas shall be trimmed to proper elevation. Low areas shall be filled and compacted to a condition similar to that of surrounding grade, or filled with concrete monolithically with the pavement. Low areas filled with concrete shall not be cored for thickness to avoid biasing the average thickness used for evaluation and payment adjustment. Any underlying material disturbed by construction operations shall be reworked and recompacted to specified density immediately in front of the paver. If a slipform paver is used, the same underlying material under the paving lane shall be continued beyond the edge of the lane a sufficient distance and shall be thoroughly compacted and true to grade to provide a suitable trackline for the slipform paver and firm support for the edge of the paving lane.

3.2.2 Traffic on Underlying Material

After the underlying material has been prepared for concrete placement, no equipment shall be permitted thereon. Subject to specific approval, crossing of the prepared underlying material at specified intervals for construction purposes may be permitted, provided rutting or indentations do not occur. The surface shall be reworked and reprepared to the satisfaction of the Contracting Officer before concrete is placed. Equipment shall be allowed to operate on the underlying material only if approved by the Contracting Officer and only if no damage is done to the underlying material and its degree of compaction. Any disturbance to the underlying material that does occur shall be corrected, as approved, before the paver-finisher or the deposited concrete reaches the location of the disturbance and the equipment shall be replaced or procedures changed to

prevent any future damage.

3.3 WEATHER LIMITATIONS

3.3.1 Placement and Protection During Inclement Weather

Do not commence placing operations when heavy rain or other damaging weather conditions appear imminent. At all times when placing concrete, maintain on-site sufficient waterproof cover and means to rapidly place it over all unhardened concrete or concrete that might be damaged by rain. Suspend placement of concrete whenever rain, high winds, or other damaging weather commences to damage the surface or texture of the placed unhardened concrete, washes cement out of the concrete, or changes the water content of the surface concrete. All unhardened concrete shall be immediately covered and protected from the rain or other damaging weather. Any slab damaged by rain or other weather shall be completely removed full depth, by full slab width, to the nearest original joint, and replaced at the Contractor's expense as specified in paragraph: REPAIR, REMOVAL AND REPLACEMENT OF NEWLY CONSTRUCTED SLABS below.

3.3.2 Paving in Hot Weather

When the ambient temperature during paving is expected to exceed 32 degrees C, the concrete shall be properly placed and finished in accordance with procedures previously submitted, approved, and as specified herein. The concrete temperature at time of delivery to the forms shall not exceed the temperature shown in the table below when measured in accordance with ASTM C 1064/C 1064M. Cooling of the mixing water or aggregates or placing in the cooler part of the day may be required to obtain an adequate placing temperature. Steel forms and reinforcing shall be cooled as needed to maintain steel temperatures below 49 degrees C. Transporting and placing equipment shall be cooled or protected if necessary to maintain proper concrete placing temperature. The finished surfaces of the newly laid pavement shall be kept damp by applying a fog spray (mist) with approved spraying equipment until the pavement is covered by the curing medium.

Maximum Allowable Concrete Placing Temperature

Relative Humidity, Percent, During Time of Concrete Placement	Maximum Allowable Concrete Temperature in Degrees C
Greater than 60	33
40-60	30
Less than 40	27

3.3.3 Prevention of Plastic Shrinkage Cracking

During weather with low humidity, and particularly with high temperature and appreciable wind, develop and institute measures to prevent plastic shrinkage cracks from developing. If plastic shrinkage cracking occurs, halt further placement of concrete until protective measures are in place to prevent further cracking. Periods of high potential for plastic shrinkage cracking can be anticipated by use of Fig. 2.1.5 of ACI 305R. In addition to the protective measures specified in the previous paragraph, the concrete placement shall be further protected by erecting shades and windbreaks and by applying fog sprays of water, the addition of monomolecular films, or wet covering. When such water treatment is

stopped, curing procedures shall be immediately commenced. Plastic shrinkage cracks that occur shall be repaired in accordance with paragraph: REPAIR, REMOVAL, REPLACEMENT OF NEWLY CONSTRUCTED SLABS. Plastic shrinkage cracks shall never be troweled over or filled with slurry.

3.3.4 Paving in Cold Weather

Cold weather paving shall conform to ACI 306R. Special protection measures, as specified herein, shall be used if freezing temperatures are anticipated before the expiration of the specified curing period. Placement of concrete shall not begin unless the ambient temperature is at least 2 degrees C and rising. Thereafter, placement of concrete shall be halted whenever the ambient temperature drops below 5 degrees C. When the ambient temperature is less than 10 degrees C, the temperature of the concrete when placed shall be not less than 10 degrees C nor more than 25 degrees C. Heating of the mixing water or aggregates will be required to regulate the concrete placing temperature. Materials entering the mixer shall be free from ice, snow, or frozen lumps. Salt, chemicals or other materials shall not be incorporated in the concrete to prevent freezing. If allowed under paragraph: MIXTURE PROPORTIONS in PART 2, an accelerating admixture may be used when the ambient temperature is below 10 degrees C. Covering and other means shall be provided for maintaining the concrete at a temperature of at least 10 degrees C for not less than 72 hours after placing, and at a temperature above freezing for the remainder of the curing period. Pavement slabs damaged by freezing shall be removed full depth, by full slab width, to the nearest original joint, and replaced at the Contractor's expense as specified in paragraph: REPAIR, REMOVAL, REPLACEMENT OF NEWLY CONSTRUCTED SLABS.

3.4 CONCRETE PRODUCTION

Batching, mixing, and transporting equipment shall have a capacity sufficient to maintain a continuous, uniform forward movement of the paver of not less than 0.8 m per minute. Concrete transported in non-agitating equipment shall be deposited in front of the paver within 45 minutes from the time cement has been charged into the mixing drum, except that if the ambient temperature is above 32 degrees C, the time shall be reduced to 30 minutes. Concrete transported in truck mixers shall be deposited in front of the paver within 90 minutes from the time cement has been charged into the mixer drum of the plant or truck mixer. If the ambient temperature is above 32 degrees C , the time shall be reduced to 60 minutes. Every load of concrete delivered to the paving site shall be accompanied by a batch ticket from the operator of the batching plant. Tickets shall be on approved forms and shall show at least the mass, or volume, of all ingredients in each batch delivered, the water meter and revolution meter reading on truck mixers and the time of day. Tickets shall be delivered to the placing foreman who shall keep them on file and deliver them to the Government weekly, or as directed by the Contracting Officer.

3.4.1 Batching and Mixing Concrete

Scale pivots and bearings shall be kept clean and free of rust. Any equipment which fails to perform as specified shall immediately be removed from use until properly repaired and adjusted, or replaced.

3.4.2 Transporting and Transfer - Spreading Operations

Non-agitating equipment shall be used only on smooth roads and for haul time less than 15 minutes. Concrete shall be deposited as close as

possible to its final position in the paving lane. All equipment shall be operated to discharge and transfer concrete without segregation. In no case shall dumping of concrete in discrete piles be permitted. No transfer or spreading operation which requires the use of front-end loaders, dozers, or similar equipment to distribute the concrete will be permitted.

3.5 PAVING

3.5.1 General Requirements

Pavement shall be constructed with paving and finishing equipment utilizing rigid fixed forms or by use of slipform paving equipment. Paving and finishing equipment and procedures shall be capable of constructing paving lanes of the required width at a rate of at least 30 m of paving lane per hour on a routine basis. Paving equipment and its operation shall be controlled, and coordinated with all other operations, such that the paver-finisher has a continuous forward movement, at a reasonably uniform speed, from beginning to end of each paving lane, except for inadvertent equipment breakdown. Failure to achieve this shall require the Contractor to halt operations, regroup, and modify operations to achieve this requirement. Workmen with foreign material on their footwear or construction equipment that might deposit foreign material shall not be permitted to walk or operate in the plastic concrete. Where an open-graded granular base is required under the concrete, select paving equipment and procedures which will operate properly on the base course without causing displacement or other damage.

3.5.2 Consolidation

Concrete shall be consolidated with the specified type of lane-spanning, gang-mounted, mechanical, immersion type vibrating equipment mounted in front of the paver, supplemented, in rare instances as specified, by hand-operated vibrators. The vibrators shall be inserted into the concrete to a depth that will provide the best full-depth consolidation but not closer to the underlying material than 50 mm. Excessive vibration shall not be permitted. If the vibrators cause visible tracking in the paving lane, the paving operation shall be stopped and equipment and operations modified to prevent it. Concrete in small, odd-shaped slabs or in isolated locations inaccessible to the gang-mounted vibration equipment shall be vibrated with an approved hand-operated immersion vibrator operated from a bridge spanning the area. Vibrators shall not be used to transport or spread the concrete. Hand-operated vibrators shall not be operated in the concrete at one location for more than 20 seconds. Insertion locations for hand-operated vibrators shall be between 150 to 400 mm on centers. For each paving train, at least one additional vibrator spud, or sufficient parts for rapid replacement and repair of vibrators shall be maintained at the paving site at all times. Any evidence of inadequate consolidation (honeycomb along the edges, large air pockets, or any other evidence) shall require the immediate stopping of the paving operation and approved adjustment of the equipment or procedures.

3.5.3 Operation

When the paver approaches a header at the end of a paving lane, a sufficient amount of concrete shall be maintained ahead of the paver to provide a roll of concrete which will spill over the header. The amount of extra concrete shall be sufficient to prevent any slurry that is formed and carried along ahead of the paver from being deposited adjacent to the header. The spud vibrators in front of the paver shall be brought as close

to the header as possible before they are lifted. Additional consolidation shall be provided adjacent to the headers by hand-manipulated vibrators. When the paver is operated between or adjacent to previously constructed pavement (fill-in lanes), provisions shall be made to prevent damage to the previously constructed pavement. Screeds or extrusion plates shall be electronically controlled from the previously placed pavement so as to prevent them from applying pressure to the existing pavement and to prevent abrasion of the pavement surface. The overlapping area of existing pavement surface shall at all times be kept completely free of any loose or bonded foreign material as the paver-finisher operates across it. When the paver travels on existing pavement, approved provisions shall be made to prevent damage to the existing pavement. Pavers using transversely oscillating screeds shall not be used to form fill-in lanes that have widths less than a full width for which the paver was designed or adjusted.

3.5.4 Required Results

The paver-finisher, and its gang-mounted vibrators, together with its operating procedures shall be adjusted and operated and coordinated with the concrete mixture being used to produce a thoroughly consolidated slab throughout, true to line and grade within specified tolerances. The paver-finishing operation shall produce a surface finish free of irregularities, tears, voids of any kind, and any other discontinuities. The paver-finisher shall make only one pass across the pavement; multiple passes will not be permitted. The equipment and its operation shall produce a finished surface requiring no hand finishing other than the use of cutting straightedges, except in very infrequent instances. If any equipment or operation fails to produce the above results, the paving shall be stopped, the equipment shall be replaced or properly adjusted, the operation shall be appropriately modified, or the mixture proportions modified, in order to produce the required results before recommencing paving. No water, other than fog sprays (mist) as specified in paragraph: Prevention of Plastic Shrinkage Cracking above, shall be applied to the concrete or the concrete surface during paving and finishing.

3.5.5 Fixed Form Paving

Paving equipment for fixed-form paving and the operation thereof shall conform to the requirements of paragraph EQUIPMENT, and all requirements specified herein.

3.5.5.1 Forms for Fixed-Form Paving

a. Straight forms shall be made of steel and shall be furnished in sections not less than 3 m in length. Flexible or curved forms of proper radius shall be used for curves of 31 m radius or less. Wood forms for curves and fillets shall be made of well-seasoned, surfaced plank or plywood, straight, and free from warp or bend. Wood forms shall be adequate in strength and rigidly braced. Forms shall have a depth equal to the pavement thickness at the edge. Where the project requires several different slab thicknesses, forms may be built up by bolting or welding a tubular metal section or by bolting wood planks to the bottom of the form to completely cover the underside of the base of the form and provide an increase in depth of not more than 25 percent. The base width of the one-piece or built-up form shall be not less than eight-tenths of the vertical height of the form, except than forms 200 mm or less in vertical height shall have a base width not less than the vertical height of the form. Maximum vertical deviation of top of any side form, including joints, shall not vary from a true plane more than

3 mm in 3 m, and the upstanding leg shall not vary more than 6 mm.

b. Form sections shall be tightly locked and shall be free from play or movement in any direction. Forms shall be provided with adequate devices for secure settings so that when in place they will withstand, without visible spring or settlement, the impact and vibration of the consolidating and finishing equipment.

c. Set forms for full bearing on foundation for entire length and width and in alignment with edge of finished pavement. Support forms during entire operation of placing, compaction, and finishing so that forms will not deviate vertically more than 3 mm from required grade and elevations indicated. Conformity to the alignment and grade elevations shown on the drawings shall be checked and necessary corrections shall be made immediately prior to placing the concrete. The forms shall be cleaned and oiled each time before concrete is placed. No concrete shall be placed until setting of forms has been checked and approved by the CQC team.

d. Do not anchor guide rails for fixed form pavers into new concrete or existing concrete to remain.

e. Forms for overlay pavements and for other locations where forms must be set on existing pavements shall be held securely in place with stakes or by other approved methods. Holes in existing pavements for form stakes shall be carefully drilled by methods which will not crack or spall the existing pavement. After use, the holes shall be filled flush with the surrounding surface using approved material, prior to overlying materials being placed. Any method which does not hold the form securely or which damages the existing pavement shall be immediately discontinued. Prior to setting forms for paving operations, demonstrate the proposed form setting procedures at an approved location without proceeding further until the proposed method is approved by the Contracting Officer.

3.5.5.2 Form Removal

Keep forms in place at least 12 hours after the concrete has been placed. When conditions are such that the early strength gain of the concrete is delayed, leave the forms in place for a longer time, as directed. Remove forms by procedures that do not injure the concrete. Bars or heavy metal tools shall not be used directly against the concrete in removing the forms. Any concrete found to be defective after form removal shall be repaired promptly, using procedures specified hereinafter or as directed.

3.5.6 Slipform Paving

3.5.6.1 General

Paving equipment for slipform paving and the operation thereof shall conform to the requirement of paragraph EQUIPMENT, and all requirements specified herein. The slipform paver shall shape the concrete to the specified and indicated cross section, meeting all tolerances, in one pass. The slipform paver shall finish the surface and edges so that only a very minimum isolated amount of hand finishing is required. If the paving operation does not meet the above requirements and the specified tolerances, immediately stop the operation, and regroup and replace or modify any equipment as necessary, modify paving procedures or modify the concrete mix, in order to resolve the problem. The slipform paver shall be

automatically electronically controlled from a taut wire guideline for horizontal alignment and on both sides from a taut wire guideline for vertical alignment, except that electronic control from a ski operating on a previously constructed adjoining lane shall be used where applicable for either or both sides. Automatic, electronic controls for vertical alignment shall always be used on both sides of the lane. Control from a slope-adjustment control or control operating from the underlying material shall never be used. Side forms on slipform pavers shall be properly adjusted so that the finished edge of the paving lane meets all specified tolerances. Dowels in longitudinal construction joints shall be installed as specified below. The installation of these dowels by dowel inserters attached to the paver or by any other means of inserting the dowels into the plastic concrete shall not be permitted.

3.5.6.2 Guideline for Slipform Paving

Accurately and securely install guidelines well in advance of concrete placement. Provide supports at necessary intervals to eliminate all sag in the guideline when properly tightened. The guideline shall be high strength wire set with sufficient tension to remove all sag between supports. Supports shall be securely staked to the underlying material or other provisions made to ensure that the supports will not be displaced when the guideline is tightened or when the guideline or supports are accidentally touched by workmen or equipment during construction. The appliances for attaching the guideline to the supports shall be capable of easy adjustment in both the horizontal and vertical directions. When it is necessary to leave gaps in the guideline to permit equipment to use or cross underlying material, provisions shall be made for quickly and accurately replacing the guideline without any delay to the forward progress of the paver. Supports on either side of the gap shall be secured in such a manner as to avoid disturbing the remainder of the guideline when the portion across the gap is positioned and tightened. The guideline across the gap and adjacent to the gap for a distance of 60 m shall be checked for horizontal and vertical alignment after the guideline across the gap is tightened. Vertical and horizontal positioning of the guideline shall be such that the finished pavement shall conform to the alignment and grade elevations shown on the drawings within the specified tolerances for grade and smoothness. The specified tolerances are intended to cover only the normal deviations in the finished pavement that may occur under good supervision and do not apply to setting of the guideline. The guideline shall be set true to line and grade.

3.5.6.3 Laser Controls

If the Contractor proposes to use any type of automatic laser controls, submit a detailed description of the system and perform a trial field demonstration in the presence of the Contracting Officer at least one week prior to start of paving. Approval of the control system will be based on the results of the demonstration and on continuing satisfactory operation during paving.

3.5.7 Placing Reinforcing Steel

The type and amount of steel reinforcement shall be as shown on the drawings.

3.5.7.1 Pavement Thickness Greater Than 300 mm

For pavement thickness of 300 mm or more, the reinforcement steel shall be

installed by the strike-off method wherein a layer of concrete is deposited on the underlying material, consolidated, and struck to the indicated elevation of the steel reinforcement. The reinforcement shall be laid upon the prestruck surface, and the remaining concrete shall then be placed and finished in the required manner. When placement of the second lift causes the steel to be displaced horizontally from its original position, provisions shall be made for increasing the thickness of the first lift and depressing the reinforcement into the unhardened concrete to the required elevation. The increase in thickness shall be only as necessary to permit correct horizontal alignment to be maintained. Any portions of the bottom layer of concrete that have been placed more than 30 minutes without being covered with the top layer shall be removed and replaced with newly mixed concrete without additional cost to the Government.

3.5.7.2 Pavement Thickness Less Than 300 mm

For pavements less than 300 mm thick, the reinforcement shall be positioned on suitable chairs or continuous mesh support devices securely fastened to the subgrade prior to concrete placement. Concrete shall be vibrated after the steel has been placed. Regardless of placement procedure, the reinforcing steel shall be free from coatings which could impair bond between the steel and concrete, and laps in the reinforcement shall be as indicated. Regardless of the equipment or procedures used for installing reinforcement, ensure that the entire depth of concrete is adequately consolidated.

3.5.8 Placing Dowels

The method used in installing and holding dowels in position shall ensure that the error in alignment of any dowel from its required horizontal and vertical alignment after the pavement has been completed will not be greater than 3 mm per 300 mm. Except as otherwise specified below, horizontal spacing of dowels shall be within a tolerance of plus or minus 15 mm. The vertical location on the face of the slab shall be within a tolerance of plus or minus 13 mmThe vertical alignment of the dowels shall be measured parallel to the designated top surface of the pavement, except for those across the crown or other grade change joints. Dowels across crowns and other joints at grade changes shall be measured to a level surface. Horizontal alignment shall be checked perpendicular to the joint edge. The horizontal alignment shall be checked with a framing square. Dowels shall not be placed closer than 0.6 times the dowel bar length to the planned joint line. If the last regularly spaced dowel is closer than that dimension, it shall be moved away from the joint to a location 0.6 times the dowel bar length, but not closer than 150 mm to its nearest neighbor. Dowel interference at a transverse joint-longitudinal joint intersection shall be resolved by deleting the closest transverse dowel. Dowels shall be installed as specified in the following subparagraphs.

3.5.8.1 Contraction Joints

Dowels in longitudinal and transverse contraction joints within the paving lane shall be held securely in place, as indicated, by means of rigid metal frames or basket assemblies of an approved type. The basket assemblies shall be held securely in the proper location by means of suitable pins or anchors. Do not cut or crimp the dowel basket tie wires.

3.5.8.2 Construction Joints-Fixed Form Paving

Installation of dowels shall be by the bonded-in-place method.

Installation by removing and replacing in preformed holes will not be permitted. Dowels shall be prepared and placed across joints where indicated, correctly aligned, and securely held in the proper horizontal and vertical position during placing and finishing operations, by means of devices fastened to the forms. The spacing of dowels in construction joints shall be as indicated, except that, where the planned spacing cannot be maintained because of form length or interference with form braces, closer spacing with additional dowels shall be used.

3.5.8.3 Dowels Installed in Hardened Concrete

Install dowels in hardened concrete by bonding the dowels into holes drilled into the hardened concrete. The concrete shall have cured for 7 days or reached a minimum flexural strength of 3.1 MPa before drilling commences. Holes 3 mm greater in diameter than the dowels shall be drilled into the hardened concrete using rotary-core drills. Rotary-percussion drills may be used, provided that excessive spalling does not occur to the concrete joint face. Continuing damage shall require modification of the equipment and operation. Depth of dowel hole shall be within a tolerance of plus/minus 13 mm of the dimension shown on the drawings. Upon completion of the drilling operation, the dowel hole shall be blown out with oil-free, compressed air. Dowels shall be bonded in the drilled holes using epoxy resin. Epoxy resin shall be injected at the back of the hole before installing the dowel and extruded to the collar during insertion of the dowel so as to completely fill the void around the dowel. Application by buttering the dowel will not be permitted. The dowels shall be held in alignment at the collar of the hole, after insertion and before the grout hardens, by means of a suitable metal or plastic grout retention ring fitted around the dowel. Dowels required to be installed in any joints between new and existing concrete shall be grouted in holes drilled in the existing concrete, all as specified above.

3.5.8.4 Lubricating Dowel Bars

The portion of each dowel intended to move within the concrete or expansion cap shall be wiped clean and coated with a thin, even film of lubricating oil or light grease before the concrete is placed.

3.6 FINISHING

Finishing operations shall be a continuing part of placing operations starting immediately behind the strike-off of the paver. Initial finishing shall be provided by the transverse screed or extrusion plate. The sequence of operations shall be transverse finishing, longitudinal machine floating if used, straightedge finishing, texturing, and then edging of joints. Finishing shall be by the machine method. The hand method shall be used only on isolated areas of odd slab widths or shapes and in the event of a breakdown of the mechanical finishing equipment. Supplemental hand finishing for machine finished pavement shall be kept to an absolute minimum. Any machine finishing operation which requires appreciable hand finishing, other than a moderate amount of straightedge finishing, shall be immediately stopped and proper adjustments made or the equipment replaced. Any operations which produce more than 3 mm of mortar-rich surface (defined as deficient in plus 4.75 mm size aggregate) shall be halted immediately and the equipment, mixture, or procedures modified as necessary. Compensation shall be made for surging behind the screeds or extrusion plate and settlement during hardening and care shall be taken to ensure that paving and finishing machines are properly adjusted so that the finished surface of the concrete (not just the cutting edges of the

screeds) will be at the required line and grade. Finishing equipment and tools shall be maintained clean and in an approved condition. At no time shall water be added to the surface of the slab with the finishing equipment or tools, or in any other way, except for fog (mist) sprays specified to prevent plastic shrinkage cracking.

3.6.1 Machine Finishing With Fixed Forms

The machine shall be designed to ride the forms and shall be operated to screed and consolidate the concrete. Machines that cause displacement of the forms shall be replaced. The machine shall make only one pass over each area of pavement. If the equipment and procedures do not produce a surface of uniform texture, true to grade, in one pass, the operation shall be immediately stopped and the equipment, mixture, and procedures adjusted as necessary.

3.6.2 Machine Finishing with Slipform Pavers

The slipform paver shall be operated so that only a very minimum of additional finishing work is required to produce pavement surfaces and edges meeting the specified tolerances. Any equipment or procedure that fails to meet these specified requirements shall immediately be replaced or modified as necessary. A self-propelled nonrotating pipe float may be used while the concrete is still plastic, to remove minor irregularities and score marks. Only one pass of the pipe float shall be allowed. If there is concrete slurry or fluid paste on the surface that runs over the edge of the pavement, the paving operation shall be immediately stopped and the equipment, mixture, or operation modified to prevent formation of such slurry. Any slurry which does run down the vertical edges shall be immediately removed by hand, using stiff brushes or scrapers. No slurry, concrete or concrete mortar shall be used to build up along the edges of the pavement to compensate for excessive edge slump, either while the concrete is plastic or after it hardens.

3.6.3 Surface Correction and Testing

After all other finishing is completed but while the concrete is still plastic, minor irregularities and score marks in the pavement surface shall be eliminated by means of cutting straightedges. Such straightedges shall be 4 m in length and shall be operated from the sides of the pavement and from bridges. A straightedge operated from the side of the pavement shall be equipped with a handle 1 m longer than one-half the width of the pavement. The surface shall then be tested for trueness with a straightedge held in successive positions parallel and at right angles to the center line of the pavement, and the whole area covered as necessary to detect variations. The straightedge shall be advanced along the pavement in successive stages of not more than one-half the length of the straightedge. Depressions shall be immediately filled with freshly mixed concrete, struck off, consolidated with an internal vibrator, and refinished. Projections above the required elevation shall also be struck off and refinished. The straightedge testing and finishing shall continue until the entire surface of the concrete is free from observable departure from the straightedge and conforms to the surface requirements specified in paragraph: ACCEPTABILITY OF WORK in PART 1. This straightedging shall not be used as a replacement for the straightedge testing of paragraph: Surface Smoothness in PART 1. Long-handled, flat bull floats shall be used very sparingly and only as necessary to correct minor, scattered surface defects. If frequent use of bull floats is necessary, the paving operation shall be stopped and the equipment, mixture or procedures adjusted to

eliminate the surface defects. Finishing with hand floats and trowels shall be held to the absolute minimum necessary. Extreme care shall be taken to prevent overfinishing joints and edges. The surface finish of the pavement shall be produced essentially by the finishing machine and not by subsequent hand finishing operations. All hand finishing operations shall be subject to approval and shall be modified when directed.

3.6.4 Hand Finishing

Use hand finishing operations only as specified below.

3.6.4.1 Equipment and Template

In addition to approved mechanical internal vibrators for consolidating the concrete, provide a strike-off and tamping template and a longitudinal float for hand finishing. The template shall be at least 300 mm longer than the width of pavement being finished, of an approved design, and sufficiently rigid to retain its shape, and shall be constructed of metal or other suitable material shod with metal. The longitudinal float shall be at least 3 m long, of approved design, and rigid and substantially braced, and shall maintain a plane surface on the bottom. Grate tampers (jitterbugs) shall not be used.

3.6.4.2 Finishing and Floating

As soon as placed and vibrated, the concrete shall be struck off and screeded to the crown and cross section and to such elevation above grade that when consolidated and finished, the surface of the pavement will be at the required elevation. In addition to previously specified complete coverage with handheld immersion vibrators, the entire surface shall be tamped with the strike-off and tamping template, and the tamping operation continued until the required compaction and reduction of internal and surface voids are accomplished. Immediately following the final tamping of the surface, the pavement shall be floated longitudinally from bridges resting on the side forms and spanning but not touching the concrete. If necessary, additional concrete shall be placed, consolidated and screeded, and the float operated until a satisfactory surface has been produced. The floating operation shall be advanced not more than half the length of the float and then continued over the new and previously floated surfaces.

3.6.5 Texturing

Before the surface sheen has disappeared and before the concrete hardens or curing compound is applied, the surface of the pavement shall be given a texture as described herein. After curing is complete, all textured surfaces shall be thoroughly power broomed to remove all debris.

3.6.5.1 Burlap Drag Surface

Surface texture shall be applied by dragging the surface of the pavement, in the direction of the concrete placement, with an approved burlap drag. The drag shall be operated with the fabric moist, and the fabric shall be cleaned or changed as required to keep clean. The dragging shall be done so as to produce a uniform finished surface having a fine sandy texture without disfiguring marks.

3.6.6 Edging

After texturing has been completed, the edge of the slabs along the forms,

along the edges of slipformed lanes, and at the joints shall be carefully finished with an edging tool to form a smooth rounded surface of 3 mm radius. Tool marks shall be eliminated, and the edges shall be smooth and true to line. No water shall be added to the surface during edging. Extreme care shall be taken to prevent overworking the concrete.

3.6.7 Outlets in Pavement

Recesses for the tie-down anchors, lighting fixtures, and other outlets in the pavement shall be constructed to conform to the details and dimensions shown. The concrete in these areas shall be carefully finished to provide a surface of the same texture as the surrounding area that will be within the requirements for plan grade and surface smoothness.

3.7 CURING

3.7.1 Protection of Concrete

Concrete shall be continuously protected against loss of moisture and rapid temperature changes for at least 7 days from the completion of finishing operations. All equipment needed for adequate curing and protection of the concrete shall be on hand and ready for use before actual concrete placement begins. If any selected method of curing does not afford the proper curing and protection against concrete cracking, the damaged pavement shall be removed and replaced, and another method of curing shall be employed as directed. Curing shall be accomplished by one of the following methods except that only moist curing shall be used for the first 24 hours.

3.7.2 Membrane Curing

A uniform coating of white-pigmented, membrane-forming, curing compound shall be applied to the entire exposed surface of the concrete as soon as the free water has disappeared from the surface after moist curing ceases. Along the formed edge faces, it shall be applied immediately after the forms are removed. Concrete shall not be allowed to dry before the application of the membrane. If any drying has occurred, the surface of the concrete shall be moistened with a fine spray of water, and the curing compound applied as soon as the free water disappears. The curing compound shall be applied to the finished surfaces by means of an approved automatic spraying machine. The curing compound shall be applied with an overlapping coverage that will give a two-coat application at a coverage of 10 square meters per L, plus or minus 5.0 percent for each coat. A one-coat application may be applied provided a uniform application and coverage of 5 square meters per L, plus or minus 5.0 percent is obtained.. The application of curing compound by hand-operated, mechanical powered pressure sprayers will be permitted only on odd widths or shapes of slabs and on concrete surfaces exposed by the removal of forms. When the application is made by hand-operated sprayers, a second coat shall be applied in a direction approximately at right angles to the direction of the first coat. If pinholes, abrasions, or other discontinuities exist, an additional coat shall be applied to the affected areas within 30 minutes. Concrete surfaces that are subjected to heavy rainfall within 3 hours after the curing compound has been applied shall be resprayed by the method and at the coverage specified above. Areas where the curing compound is damaged by subsequent construction operations within the curing period shall be immediately resprayed. Concrete surfaces to which membrane-curing compounds have been applied shall be adequately protected during the entire curing period from pedestrian and vehicular traffic, except as required for

joint-sawing operations and surface tests, and from any other possible damage to the continuity of the membrane.

3.7.3 Moist Curing

Concrete to be moist-cured shall be maintained continuously wet for the entire curing period, or until curing compound is applied, commencing immediately after finishing. If forms are removed before the end of the curing period, curing shall be carried out as on unformed surfaces, using suitable materials. Surfaces shall be cured by ponding, by continuous sprinkling, by continuously saturated burlap or cotton mats, or by continuously saturated plastic coated burlap. Burlap and mats shall be clean and free from any contamination and shall be completely saturated before being placed on the concrete. Lap sheets to provide full coverage. Provide an approved work system to ensure that moist curing is continuous 24 hours per day and that the entire surface is wet.

3.8 JOINTS

3.8.1 General Requirements for Joints

Joints shall conform to the locations and details indicated and shall be perpendicular to the finished grade of the pavement. All joints shall be straight and continuous from edge to edge or end to end of the pavement with no abrupt offset and no gradual deviation greater than 13 mm. Where any joint fails to meet these tolerances, the slabs adjacent to the joint shall be removed and replaced at no additional cost to the Government. No change from the jointing pattern shown on the drawings shall be made without written approval of the Contracting Officer. Joints shall be sealed immediately following curing of the concrete or as soon thereafter as weather conditions permit. Joints shall be sealed as specified in Section 32 13 73 COMPRESSION JOINT SEALS FOR CONCRETE PAVEMENTS.

3.8.2 Longitudinal Construction Joints

Dowels shall be installed in the longitudinal construction joints, or the edges shall be thickened as indicated. Dowels shall be installed as specified above. After the end of the curing period, longitudinal construction joints shall be sawed to provide a groove at the top for sealant conforming to the details and dimensions indicated.

3.8.3 Transverse Construction Joints

Transverse construction joints shall be installed at the end of each day's placing operations and at any other points within a paving lane when concrete placement is interrupted for 30 minutes or longer. The transverse construction joint shall be installed at a planned transverse joint. Transverse construction joints shall be constructed by utilizing headers or by paving through the joint, then full-depth sawcutting the excess concrete. Pavement shall be constructed with the paver as close to the header as possible, and the paver shall be run out completely past the header. Transverse construction joints installed at a planned transverse joint shall be constructed as shown or, if not shown otherwise, shall be dowelled in accordance with paragraph: Dowels Installed in Hardened Concrete, or paragraph: Fixed Form Paving above.

3.8.4 Expansion Joints

Expansion joints shall be formed where indicated, and about any structures

and features that project through or into the pavement, using joint filler of the type, thickness, and width indicated, and shall be installed to form a complete, uniform separation between the structure and the pavement or pavement to pavement. The filler shall be attached to the original concrete placement with adhesive or other fasteners and shall extend the full slab depth. Adjacent sections of filler shall be fitted tightly together, and the filler shall extend across the full width of the paving lane or other complete distance in order to prevent entrance of concrete into the expansion space. Edges of the concrete at the joint face shall be finished with an edger with a radius of 3 mm.

3.8.5 Slip Joints

Slip joints shall be installed where indicated using the specified materials. Preformed joint filler material shall be attached to the face of the original concrete placement with adhesive or other fasteners full depth to completely separate the two pavement sections. A19 mm deep reservoir for joint sealant shall be constructed at the top of the joint. Edges of the joint face shall be finished with an edger with a radius of 3 mm.

3.8.6 Contraction Joints

Construct transverse and longitudinal contraction joints by sawing an initial groove in the concrete with a 3 mm blade to the indicated depth. During sawing of joints, and again 24 hours later, the CQC team shall inspect all exposed lane edges for development of cracks below the saw cut, and shall immediately report results to the Contracting Officer. If the Contracting Officer determines that there are more uncracked joints than desired, the Contractor will be directed to saw succeeding joints 25 percent deeper than originally indicated at no additional cost to the Government. The time of initial sawing shall vary depending on existing and anticipated weather conditions and shall be such as to prevent uncontrolled cracking of the pavement. Sawing of the joints shall commence as soon as the concrete has hardened sufficiently to permit cutting the concrete without chipping, spalling, or tearing. The sawed faces of joints will be inspected for undercutting or washing of the concrete due to the early sawing, and sawing shall be delayed if undercutting is sufficiently deep to cause structural weakness or excessive roughness in the joint. The sawing operation shall be carried on as required during both day and night regardless of weather conditions. The joints shall be sawed at the required spacing consecutively in the sequence of the concrete placement. Adequate lighting shall be provided for night work. Illumination using vehicle headlights will not be permitted. A chalk line or other suitable guide shall be used to mark the alinement of the joint. Before sawing a joint, the concrete shall be examined closely for cracks, and the joint shall not be sawed if a crack has occurred near the planned joint location. Sawing shall be discontinued when a crack develops ahead of the saw cut. Immediately after the joint is sawed, the saw cut and adjacent concrete surface shall be thoroughly flushed with water and vacuumed until all waste from sawing is removed from the joint and adjacent concrete surface. The surface shall be resprayed with curing compound as soon as free water disappears. Necessary precautions shall be taken to insure that the concrete is properly protected from damage and cured at sawed joints. The top of the joint opening and the joint groove at exposed edges shall be tightly sealed with cord backer rod before the concrete in the region of the joint is resprayed with curing compound, and shall be maintained until removed immediately before sawing the joint sealant reservoir. The exposed saw cuts on the faces of pilot lanes shall be sealed with bituminous mastic

or masking tape. After expiration of the curing period, the upper portion of the groove shall be widened by sawing with ganged diamond saw blades to the width and depth indicated for the joint sealer. The reservoir shall be centered over the initial sawcut.

3.8.7 Thickened Edge Joints

Construct thickened edge joints as indicated on the drawings. Underlying material in the transition area shall be graded as shown and shall meet the requirements for smoothness and compaction specified for all other areas of the underlying material.

3.9 REPAIR, REMOVAL AND REPLACEMENT OF NEWLY CONSTRUCTED SLABS

3.9.1 General Criteria

New pavement slabs that are broken, have spalled edges, or contain cracks shall be removed and replaced or repaired, as specified hereinafter at no cost to the Government. Removal of partial slabs is not permitted. Not more than 15.0 percent of each slab's longitudinal joint edge shall be spalled. Prior to fill-in lane placement, pilot lane slabs with spalls exceeding this quantity, regardless of spall size, shall be sawn full depth to remove the spalled face. All other slabs shall be removed, as directed. The Contracting Officer will determine whether cracks extend full depth of the pavement and may require cores to be drilled on the crack to determine depth of cracking. Such cores shall be at least 150 mm diameter, and shall be drilled and backfilled with an approved non-shrink concrete. Perform drilling of cores and refilling holes at no expense to the Government.

3.9.2 Slabs with Cracks

Cracks that do not exceed 25 percent of the design thickness in depth shall be cleaned and then pressure injected full depth with epoxy resin, Type IV, Grade 1. Slabs containing cracks deeper than 25 percent of the design thickness shall be removed.

3.9.3 Removal and Replacement of Full Slabs

Where it is necessary to remove full slabs, removal shall be in accordance with paragraph: Removal of Existing Pavement Slab below. Removal and replacement shall be full depth, by full width of the slab, and the limit of removal shall be normal to the paving lane and extend to each original joint. Dowels of the size and spacing as specified for other joints in similar pavement shall be installed by epoxy grouting them into holes drilled into the existing concrete using procedures as specified in paragraph: Placing Dowels and Tie Bars, above. Original damaged dowels or tie bars shall be cut off flush with the joint face. Protruding portions of dowels shall be painted and lightly oiled. All four edges of the new slab shall thus contain dowels. Placement of concrete shall be as specified for original construction. Prior to placement of new concrete, the underlying material shall be recompacted and shaped as specified in the appropriate section of these specifications, and the surfaces of all four joint faces shall be cleaned of all loose material and contaminants and coated with a double application of membrane forming curing compound as bond breaker. Care shall be taken to prevent any curing compound from contacting dowels or tie bars. The resulting joints around the new slab shall be prepared and sealed as specified for original construction.

3.9.4 Repairing Spalls Along Joints

Where directed, spalls along joints of new slabs, along edges of adjacent existing concrete, and along parallel cracks shall be repaired by first making a vertical saw cut at least 25 mm outside the spalled area and to a depth of at least 50 mm. Saw cuts shall be straight lines forming rectangular areas. The concrete between the saw cut and the joint, or crack, shall be chipped out to remove all unsound concrete and into at least 13 mm of visually sound concrete. Spalls along joints to be sealed with compression seals shall be sawn, chipped out, and repaired to a depth to restore the full joint-face support. The cavity thus formed shall be thoroughly cleaned with high pressure water jets supplemented with oil-free compressed air to remove all loose material. Immediately before filling the cavity, a prime coat shall be applied to the dry cleaned surface of all sides and bottom of the cavity, except any joint face. The prime coat shall be applied in a thin coating and scrubbed into the surface with a stiff-bristle brush. Prime coat for portland cement repairs shall be a neat cement grout and for epoxy resin repairs shall be epoxy resin, Type III, Grade 1. The prepared cavity shall be filled with: Portland cement concrete or latex modified mortar for larger cavities, those more than 0.009 cubic meter in size after removal operations; Portland cement mortar for cavities between 0.00085 cubic meter and 0.009 cubic meter; and epoxy resin mortar or epoxy resin or latex modified mortar for those cavities less than 0.00085 cubic meter in size. Portland cement concretes and mortars shall be very low slump mixtures, 13 mm slump or less, proportioned, mixed, placed, consolidated by tamping, and cured, all as directed. Epoxy resin mortars shall be made with Type III, Grade 1, epoxy resin, using proportions and mixing and placing procedures as recommended by the manufacturer and approved by the Contracting Officer. Proprietary patching materials may be used, subject to approval by the Contracting Officer. The epoxy resin materials shall be placed in the cavity in layers not over 50 mm thick. The time interval between placement of additional layers shall be such that the temperature of the epoxy resin material does not exceed 60 degrees C at any time during hardening. Mechanical vibrators and hand tampers shall be used to consolidate the concrete or mortar. Any repair material on the surrounding surfaces of the existing concrete shall be removed before it hardens. Where the spalled area abuts a joint, an insert or other bond-breaking medium shall be used to prevent bond at the joint face. A reservoir for the joint sealant shall be sawed to the dimensions required for other joints. The reservoir shall be thoroughly cleaned and then sealed with the sealer specified for the joints. In lieu of sawing, spalls not adjacent to joints and popouts, both less than 150 mm in maximum dimension, may be prepared by drilling a core 50 mm in diameter greater than the size of the defect, centered over the defect, and 50 mm deep or13 mm into sound concrete, whichever is greater. The core hole shall be repaired as specified above for other spalls.

3.9.5 Repair of Weak Surfaces

Weak surfaces are defined as mortar-rich, rain-damaged, uncured, or containing exposed voids or deleterious materials. Slabs containing weak surfaces less than 1/4 inch (6 mm) thick shall be diamond ground to remove the weak surface. Diamond grinding shall be in accordance with paragraph: Diamond Grinding of PCC Surfaces in PART 1. All ground ares shall meet the thickness, smoothness and grade criteri of paragraph: Acceptance Requirements in PART 1. Slabs containing weak surfaces greater than 6 mm thick shall be removed and replaced.

3.9.6 Repair of Pilot Lane Vertical Faces

Excessive edge slump and joint face deformation shall be repaired in accordance with paragraph: Edge Slump and Joint Face Deformation in PART 1. Inadequate consolidation (honeycombing or air voids) shall be repaired by saw cutting the face full depth along the entire lane length with a diamond blade. Obtain cores, as directed, to determine the depth of removal.

3.10 EXISTING CONCRETE PAVEMENT REMOVAL AND REPAIR

Existing concrete pavement shall be removed at locations indicated on the drawings. Prior to commencing pavement removal operations, inventory the pavement distresses (cracks, spalls, and corner breaks) along the pavement edge to remain. After pavement removal, the remaining edge shall again be surveyed to quantify any damage caused by Contractor's removal operations. Perform both surveys in the presence of the Contracting Officer. Repairs shall be made as indicated and as specified herein. All operations shall be carefully controlled to prevent damage to the concrete pavement and to the underlying material to remain in place. All saw cuts shall be made perpendicular to the slab surface, forming rectangular areas.

3.10.1 Removal of Existing Pavement Slab

When existing concrete pavement is to be removed and adjacent concrete is to be left in place, the joint between the removal area and adjoining pavement to stay in place shall first be cut full depth with a standard diamond-type concrete saw. Next, a full depth saw cut shall be made parallel to the joint at least 600 mm from the joint and at least 150 mm from the end of any dowels. This saw cut shall be made with a wheel saw as specified in paragraph: Sawing Equipment. All pavement to be removed beyond this last saw cut shall be removed in accordance with the approved demolition work plan. All pavement between this last saw cut and the joint line shall be removed by carefully pulling pieces and blocks away from the joint face with suitable equipment and then picking them up for removal. In lieu of this method, this strip of concrete may be carefully broken up and removed using hand-held jackhammers, 14 kg or less, or other approved light-duty equipment which will not cause stress to propagate across the joint saw cut and cause distress in the pavement which is to remain in place. In lieu of the above specified removal method, the slab may be sawcut full depth to divide it into several pieces and each piece lifted out and removed. Suitable equipment shall be used to provide a truly vertical lift, and safe lifting devices used for attachment to the slab.

3.10.2 Edge Repair

The edge of existing concrete pavement against which new pavement abuts shall be protected from damage at all times. Slabs which are damaged during construction shall be removed and replaced as directed by the Contracting Officer at no cost to the Government. Repair of previously existing damage areas will be considered a subsidiary part of concrete pavement construction. All exposed keyways shall be sawn off full depth.

3.10.2.1 Spall Repair

Not more than 15.0 percent of each slab's edge shall be spalled as a result of the Contractor's actions. Slabs with spalls exceeding this quantity, regardless of spall size, shall be sawn full depth on the exposed face to remove the spalled face. Repair materials and procedures shall be as

previously specified in paragraph: Repairing Spalls Along Joints.

3.10.2.2 Underbreak and Underlying Material

All underbreak shall be repaired by removal and replacement of the damaged slabs in accordance with paragraph: Removal and Replacement of Full Slabs above. The underlying material adjacent to the edge of and under the existing pavement which is to remain in place shall be protected from damage or disturbance during removal operations and until placement of new concrete, and shall be shaped as shown on the drawings or as directed. Sufficient underlying material shall be kept in place outside the joint line to completely prevent disturbance of material under the pavement which is to remain in place. Any material under the portion of the concrete pavement to remain in place which is disturbed or loses its compaction shall be carefully removed and replaced with concrete.

3.11 PAVEMENT PROTECTION

Protect the pavement against all damage prior to final acceptance of the work by the Government. Aggregates, rubble, or other similar construction materials shall not be placed on airfield pavements. Traffic shall be excluded from the new pavement by erecting and maintaining barricades and signs until the concrete is at least 14 days old, or for a longer period if so directed. As a construction expedient in paving intermediate lanes between newly paved pilot lanes, operation of the hauling and paving equipment will be permitted on the new pavement after the pavement has been cured for 7 days and the joints have been sealed or otherwise protected, the concrete has attained a minimum field cured flexural strength of 3.6 MPa. and approved means are furnished to prevent damage to the slab edge. All new and existing pavement carrying construction traffic or equipment shall be continuously kept completely clean, and spillage of concrete or other materials shall be cleaned up immediately upon occurrence. Special care shall be used where Contractor's traffic uses or crosses active airfield pavement. Power broom other existing pavements at least daily when traffic operates. For fill-in lanes, equipment shall be used that will not damage or spall the edges or joints of the previously constructed pavement.

3.12 TESTING AND INSPECTION FOR CONTRACTOR QUALITY CONTROL

3.12.1 Testing and Inspection by Contractor

During construction, the Contractor is responsible for sampling and testing aggregates, cement, silica fume, and concrete to determine compliance with the specifications. Provide facilities and labor as may be necessary for procurement of representative test samples. Furnish sampling platforms and belt templates to obtain representative samples of aggregates from charging belts at the concrete plant. Samples of concrete shall be obtained at the point of delivery to the paver. Testing by the Government will in no way relieve the Contractor of the specified testing requirements. Perform the inspection and tests described below, and based upon the results of these inspections and tests, take the action required and submit reports as required. This testing shall be performed regardless of any other testing performed by the Government, either for pay adjustment purposes or for any other reason.

3.12.2 Testing and Inspection Requirements

Contractor CQC sampling, testing, inspection and reporting shall be in accordance with the following Table 2.

TABLE 2
CONTRACTOR TESTING AND INSPECTION REQUIREMENTS

Frequency	Test Method	Control Limit/Corrective Action
		Fine Aggregate Gradation and Fineness Modulus
2 per lot	ASTM C 136 sample at belt	9 of 10 tests vary <0.15 from average Outside limits on any sieve-retest 2nd failure-stop, repair, retest
		Coarse Aggregate Gradation
2 per lot	ASTM C 136 sample at belt	Outside limits on any sieve-retest 2nd failure-report to COR, correct 2 consecutive avgs of 5 tests out- report to COR, stop ops, repair, retest
		Worability Factor and Coarseness Factor Computation
Same as C.A. & F.A.	see paragraph: Aggregates	Use individual C.A. and F.A. gradations Combine using batch ticket percentages Tolerances: +/- 3 points on WF +/- 5 points on CF from approved mix design values Check batching tolerances, recalibrate scales
		Aggregate Deleterious, Quality, and ASR Tests
Every 30 days	see paragraph: AGGREGATES	Stop production, retest, replace aggregate Increase testing interval to 90 days if previous 2 tests pass
		Plant - Scales, Weighing Accuracy
Monthly	NRMCA QC 3	Stop plant ops, repair, recalibrate
		Plant - Batching and Recording Accuracy
Weekly	Record/Report	Record required/recorded/actual batch mass Stop plant ops, repair, recalibrate
		Plant - Batch Plant Control
Every lot	Record/Report	Record type/amt of each material per lot
		Plant - Mixer Uniformity - Stationary Mixers
Every 4 months during paving	COE CRD-C 55	After initial approval, use abbreviated method. Increase mixing time, change batching sequence, reduce batch size to bring into compliance. Retest
		Plant - Mixer Uniformity - Truck Mixers
Every 4 months during paving	ASTM C 94/C 94M	Random selection of truck. Increase mixing time, change batching sequence, reduce batch size to bring into compliance. Retest.
		Concrete Mixture - Air Content
When test specimens prepared + 2 random	ASTM C 231 sample at paving site	Individual test control chart: Warning +/-1.0 - adjust AEA, retest Action +/-1.5 - halt ops, repair, retest Range between 2 consecutive tests: Warning +2.0 - recalibrate AEA dispenser

Frequency	Test Method	Control Limit/Corrective Action
		Action +3.0 - halt ops, repair, retest
		Concrete Mixture - Unit Weight and Yield
Same as Air content	ASTM C 138/C 138M sample at paving site	Individual test basis: Warning Yield -0/+1% - check batching tol. Action Yield -0/+5% - halt ops, recalibrate
		Concrete Mixture - Slump
Measure every 3rd truck, & when specimens prepared + 4 random sample at paving site	ASTM C 143/C 143M	Individual test control chart: Upper Warning - 13 mm below max-adjust batch masses within max W/C ratio Upper Action - maximum allowable slump stop operations, adjust, retest Range between each consecutive test: 38 mm stop operations, repair, retest
		Concrete Mixture - Temperature
Measure Every Truck & when specimens prepared,sample at paving site	ASTM C 1064/C 1064M	See paragraph: WEATHER LIMITATIONS
		Concrete Mixture - Strength
8 per lot	ASTM C 31/C 31M sample at paving site	See Paragraph: Concrete Strength Testing for CQC
		Paving - Inspection Before Paving
Prior to each paving operation	Report	Inspect underlying materials, construction joint faces, forms, reinforcing, dowels, and embedded items
		Paving - Inspection During Paving
During each paving operation		Monitor and control paving operation, including placement, consolidation, finishing, texturing, curing, and joint sawing.
		Paving - Vibrators
Weekly, during paving	COE CRD-C 521	Test frequency (in concrete), and amplitude (in air), measure at tip/head and average. Repair or replace defective vibrators.
		Moist Curing
2 per lot, min 4 per day	Visual	Repair defects, extend curing by 1 day
		Membrane Compound Curing
Daily	Visual	Calculate coverage based on quantity/area Respray areas where coverage defective Recalibrate equipment
		Cold Weather Protection
Once per	Visual	Repair defects, report conditions to COR

3.12.3 Concrete Strength Testing for Contractor CQC

a. Take samples for strength tests at the paving site. Fabricate and

cure test beams in accordance with ASTM C 31/C 31M; test them in accordance with ASTM C 78.

b. Fabricate and cure 2 test beams per sublot from the same batch or truckload and at the same time acceptance beams are fabricated and test them for flexural strength at 7-day age.

c. Average all 8 flexural tests per lot. Convert this average 7-day flexural strength per lot to equivalent 28-day flexural strength using the Correlation Ratio determined during mixture proportioning studies.

d. Compare the equivalent 28-day flexural strength from the conversion to the Average Flexural Strength Required for Mixtures from paragraph of same title.

e. If the equivalent average 28-day strength for the lot is below the Average Flexural Strength Required for Mixtures by 490 kPa flexural strength or more, at any time, adjust the mixture to increase the strength, as approved.

f. The Contractor's CQC testing agency shall maintain up-to-date control charts for strength, showing the 7-day CQC flexural strength and the 28-day flexural strength (from acceptance tests) of each of these for each lot.

3.12.4 Reports

All results of tests or inspections conducted shall be reported informally as they are completed and in writing daily. Prepare a weekly report for the updating of control charts covering the entire period from the start of the construction season through the current week. During periods of cold-weather protection, make daily reports of pertinent temperatures. These requirements do not relieve the Contractor of the obligation to report certain failures immediately as required in preceding paragraphs. Such reports of failures and the action taken shall be confirmed in writing in the routine reports. The Contracting Officer has the right to examine all Contractor quality control records.

-- End of Section --

SECTION 32 13 73

COMPRESSION JOINT SEALS FOR CONCRETE PAVEMENTS

PART 1 GENERAL

1.1 REFERENCES

The publications listed below form a part of this specification to the extent referenced. The publications are referred to within the text by the basic designation only.

ASTM INTERNATIONAL (ASTM)

ASTM D 2628	(1991; R 2005) Preformed Polychloroprene Elastomeric Joint Seals for Concrete Pavements
ASTM D 2835	(1989; R 2003) Lubricant for Installation of Preformed Compression Seals in Concrete Pavements

U.S. ARMY CORPS OF ENGINEERS (USACE)

COE CRD-C 548	(1988) Standard Specification for Jet-Fuel and Heat Resistant Preformed Polychloroprene Elastomeric Joint Seals for Rigid Pavements

1.2 SAFETY

Compression joint seals shall not be placed within 7.5 meters of liquid oxygen (LOX) equipment, LOX storage, or LOX piping.

1.3 SUBMITTALS

Government approval is required for submittals with a "G" designation; submittals not having a "G" designation are for information only. When used, a designation following the "G" designation identifies the office that will review the submittal for the Government. The following shall be submitted in accordance with Section 01 33 00 SUBMITTAL PROCEDURES:

SD-03 Product Data

Equipment

List of proposed equipment to be used in the performance of construction work, including descriptive data, 60 days prior to use on the project.

Manufacturer's Instructions

Where installation procedures are required in accordance with the manufacturer's recommendations, printed copies of manufacturers' instructions, 60 days prior to use on the project.

SD-04, Samples

Compression Seals; G RE

Regardless of testing responsibility, 2.7 meter long samples of the materials, 60 days prior to use on the project. Printed directions from the manufacturer on recommended installation criteria shall be furnished with the samples plus the manufacturer's certification that the selected seal is recommended for the installation on this project.

SD-06 Test Reports

Test Requirements

Certified copies of test results, 60 days prior to use of material on the project.

1.4 TEST REQUIREMENTS

Each lot of compression joint seal and lubricant/adhesive shall be sampled, identified, and tested for conformance with the applicable material specification. A lot of compression seal shall consist of 1 day's production or 6,000 meters for each cross section, whichever is less. A lot of lubricant/adhesive shall consist of 1 day's production. Testing of the compression joint seal and lubricant/adhesive material shall be the responsibility of the Contractor and shall be performed in an approved independent laboratory, and certified copies of the test reports shall be submitted for approval 60 days prior to the use of the materials at the jobsite. Samples of each lot of material shall also be submitted and will be retained by the Government for possible future testing should the materials appear defective during or after application. The Contractor shall furnish additional samples of materials, in sufficient quantity to be tested, upon request. Final acceptance will be based on conformance to the specified test requirements and the performance of the in-place materials.

1.5 EQUIPMENT

Machines, tools, and equipment used in the performance of the work required by this section shall be approved before the work is started and shall be maintained in satisfactory condition at all times.

1.5.1 Joint Cleaning Equipment

1.5.1.1 Concrete Saw

A self-propelled power saw with water-cooled diamond saw blades shall be provided for cutting joints to the depths and widths specified and for removing filler, existing old joint seal, or other material embedded in the joints or adhered to the joint faces.

1.5.1.2 Sandblasting Equipment

Sandblasting equipment shall include an air compressor, hose, and a long-wearing venturi-type nozzle of proper size, shape, and opening. The maximum nozzle opening should not exceed 6 mm. The air compressor shall be portable and shall be capable of furnishing not less than 4200 liters per minute and maintaining a line pressure of not less than 620 kPa at the nozzle while in use. The compressor shall be equipped with traps that will

maintain the compressed air free of oil and water. The nozzle shall have an adjustable guide that will hold the nozzle aligned with the joint about 25 mm above the pavement surface and will direct the blast to clean the joint walls. The height, angle of inclination, and the size of the nozzle shall be adjusted as necessary to ensure satisfactory results.

1.5.1.3 Waterblasting Equipment

Waterblasting equipment shall include a trailer-mounted water tank, pumps, high-pressure hose, a wand with safety release cutoff controls, nozzle, and auxiliary water resupply equipment. The water tank and auxiliary water resupply equipment shall be of sufficient capacity to permit continuous operations. The pumps, hoses, wand, and nozzle shall be of sufficient capacity to permit the cleaning of both walls of the joint and the pavement surface for a width of at least 13 mm on either side of the joint. A pressure gauge mounted at the pump shall show at all times the pressure in kPa at which the equipment is operating.

1.5.2 Sealing Equipment

Equipment used to install the compression seal shall place the compression seal to the prescribed depths within the specified tolerances without cutting, nicking, twisting, or otherwise damaging the seal. The equipment shall be capable of placing the seal with not more than two percent longitudinal stretch or compression of the seal during installation. The machine shall be an automatic self-propelled joint seal application equipment and engine powered. The machine shall include a reservoir for the lubricant/adhesive, a device for conveying the lubricant/adhesive in the proper quantities to the sides of the compression seal or the sidewalls of the joints, a reel capable of holding one full spool of compression seal, and a power-driven apparatus for feeding the joint seal through a compression device and inserting the seal into the joint. The equipment shall also include a guide to maintain the proper course along the joint being sealed. The machine shall at all times be operated by an experienced operator.

1.6 TRIAL JOINT SEAL AND LUBRICANT/ADHESIVE INSTALLATION

Prior to the cleaning and sealing of the joints for the entire project, a test section at least 69 meters long shall be prepared at a designated location in the project pavement, using the specified materials and the approved equipment to demonstrate the proposed joint preparation and sealing of all types of joints in the project. Following the completion of the trial length and before any other joint is sealed, the trial joints will be inspected by the Government to determine that the materials and installation meet the requirements specified. If materials or installation do not meet requirements, the materials shall be removed, and the joints shall be recleaned and resealed at no cost to the Government. No other joints shall be sealed until the test installation has been approved. If the trial section is approved, it may be incorporated into the permanent work. Other joints shall be sealed in the manner approved for sealing the trial joint.

1.7 DELIVERY AND STORAGE

Materials delivered to the jobsite shall be inspected for defects, unloaded, and stored with a minimum of handling to avoid damage. Storage facilities shall protect materials from weather and shall maintain materials at temperatures recommended by the manufacturer.

1.8 ENVIRONMENTAL CONDITIONS

The ambient temperature and the pavement temperature within the joint wall shall be at least 2 degrees C and rising at the time of installation of the materials. Sealant installation will not be allowed if moisture or foreign material is observed in the joint.

PART 2 PRODUCTS

2.1 COMPRESSION SEALS

Compression joint seal materials shall be a vulcanized elastomeric compound using polychloroprene as the only base polymer. The material and manufactured seal shall conform to ASTM D 2628 and COE CRD-C 548 where jet fuel and/or heat blast resistance is required. The joint seal shall be a labyrinth type seal. The uncompressed depth of the face of the compression seal (that is to be bonded to the joint wall) shall be greater than the uncompressed width of the seal, except that for seals 25 mm or greater in width, the depth need be only 25 mm or greater. The actual width of the uncompressed seal for construction and contraction joints shall be 25 mm and for expansion joints shall be 32 mm. The tolerance on the seal shall be plus 3 mm or minus 1.5 mm.

2.2 LUBRICANT/ADHESIVE

Lubricant/adhesive used for the compression elastomeric joint seal shall be a one-component compound conforming to ASTM D 2835.

PART 3 EXECUTION

3.1 PREPARATION OF JOINTS

Immediately before installation of the compression joint seal, the joints shall be thoroughly cleaned to remove laitance, filler, existing sealer, foreign material and protrusions of hardened concrete from the sides and upper edges of the joint space to be sealed. Cleaning shall be by sandblasting or waterblasting and shall extend along pavement surfaces at least 13 mm on either side of the joint. After final cleaning and immediately prior to sealing, the joints shall be blown out with compressed air and left completely free of debris and water. The Contractor shall demonstrate that the selected cleaning operation meets the cleanliness requirements. Any irregularity in the joint face which would prevent uniform contact between the joint seal and the joint face shall be corrected prior to the installation of the joint seal.

3.1.1 Sawing

Joints shall be cleaned and opened to the specified width and depth by sawing. Immediately following the sawing operation, the joint faces and opening shall be thoroughly cleaned using a water jet to remove saw cuttings or debris remaining on the faces or in the joint opening. Compression seal shall be installed within 3 calendar days of the time the joint cavity is sawed. Depth of the joint cavity shall be per manufacturer's instructions. The saw cut for the joint seal cavity shall be centered over the joint line. The nominal width of the sawed joint seal cavity shall be as follows; the actual width shall be within a tolerance of plus or minus 1.5 mm:

a. If a nominal 25 mm wide compression seal is furnished, the nominal width of the saw cut shall be 14 mm when the pavement temperature at the time of sawing is between 12 and 82 degrees C. If the pavement temperature at the time of sawing is above this range, the nominal width of the saw cut shall be decreased 1.5 mm. If the pavement temperature at the time of sawing is below this range, the nominal width of the saw cut shall be increased 1.5 mm.

b. The pavement temperature shall be measured in the presence of the Contracting Officer. Measurement shall be made each day before commencing sawing and at any other time during the day when the temperature appears to be varying from the allowable sawing range.

3.1.2 Sandblast Cleaning

A multiple pass sandblasting technique shall be used until the surfaces are free of dust, dirt, curing compound, or any residue that might prevent ready insertion or uniform contact of the seal and bonding of the lubricant/adhesive to the concrete.

3.1.3 Waterblast Cleaning

A multiple pass waterblast technique shall be used until the surfaces are free of dust, dirt, curing compound, or any residue that might prevent ready insertion or uniform contact of the seal and bonding of the lubricant/adhesive to the concrete.

3.1.4 Rate of Progress

Sandblasting or waterblasting of joint faces shall be limited to the length of joint that can be sealed during the same workday.

3.2 INSTALLATION OF THE COMPRESSION SEAL

3.2.1 Time of Installation

Joints shall be sealed immediately within 3 calendar days of sawing the joint seal cavity and following concrete cure and the final cleaning of the joint walls. Open joints ready for sealing that cannot be sealed under the specified conditions shall be provided with an approved temporary seal to prevent infiltration of foreign material. When rain interrupts the sealing operations, the joints shall be washed, air pressure cleaned, and allowed to dry prior to installing the lubricant/adhesive and compression seal.

3.2.2 Sequence of Installation

Longitudinal joints shall be sealed first, followed by transverse joints. Seals in longitudinal joints shall be installed so that all transverse joint seals will be intact from edge to edge of the pavement. Intersections shall be made monolithic by use of joint seal adhesive and care in fitting the intersection parts together. Extender pieces of seal shall not be used at intersections. Any seal falling short at the intersection shall be removed and replaced with new seal at no additional cost to the Government. Seals that are required to change direction by more than 20 degrees, may require a poured sealant at the intersection. Poured sealant shall be per compression seal manufacturer's instructions.

3.3 SEALING OF JOINTS

The sides of the joint seal or the sides of the joint shall be covered with a coating of lubricant/adhesive and the seal installed as specified. Butt joints and seal intersections shall be coated with liberal applications of lubricant/adhesive. Lubricant/adhesive spilled on the pavement shall be removed immediately to prevent setting on the pavement. The in-place joint seal shall be in an upright position and free from twisting, distortion, and cuts. Adjustments shall be made to the installation equipment and procedure, if the stretch exceeds 1 percent. Any seal exceeding 2 percent stretch shall be removed and replaced. The joint seal shall be placed at a uniform depth within the tolerances specified. In-place joint seal which fails to meet the specified requirements shall be removed and replaced with new joint seal at no cost to the Government. The compression joint seal shall be placed to a depth of 6 mm, plus or minus 3 mm, below the pavement surface except when the joint is beveled or has a radius at the surface, or unless otherwise directed. For beveled joints or joints with a radius at the surface, the compression joint seal shall be installed at a depth of 3 mm, plus or minus 3 mm, below the bottom of the edge of the bevel or radius. No part of the seal shall be allowed to project above the surface of the pavement or above the edge of the bevel or radius. The seal shall be installed in the longest practicable lengths in longitudinal joints and shall be cut at the joint intersections to provide continuous installation of the seal in the transverse joints. The lubricant/adhesive in the longitudinal joints shall be allowed to set for 1 hour prior to cutting at the joint intersections to reduce the possibility of shrinkage. For all transverse joints, the minimum length of the compression joint seal shall be the pavement width from edge to edge.

3.4 CLEAN-UP

Upon completion of the project, all unused materials shall be removed from the site, any lubricant/adhesive on the pavement surface shall be removed, and the pavement shall be left in clean condition.

3.5 QUALITY CONTROL PROVISIONS

3.5.1 Application Equipment

The application equipment shall be inspected to assure uniform application of lubricant/adhesive to the sides of the compression joint seal or the walls of the joint. If any equipment causes cutting, twisting, nicking, excessive stretching or compressing of the seal, or improper application of the lubricant/adhesive, the operation shall be suspended until causes of the deficiencies are determined and corrected.

3.5.2 Procedures

3.5.2.1 Quality Control Inspection

Quality control provisions shall be provided during the joint cleaning process to prevent or correct improper equipment and cleaning techniques that damage the concrete in any manner. Cleaned joints shall be approved by the Government prior to installation of the lubricant/adhesive and compression joint seal.

3.5.2.2 Conformance to Stretching and compression Limitations

Conformance to stretching and compression limitations shall be determined.

The top surface of the compression seal shall be marked at 305 mm intervals in a manner clear and durable to enable length determinations of the seal. After installation, the distance between the marks shall be measured on the seal. If the stretching or compression exceeds 2 percent, the seal shall be removed and replaced with new joint at no additional cost to the Government. The seal shall be removed up to the last correct measurement. The seal shall be inspected a minimum of once per 50 meters of seal for compliance to the shrinkage or compression requirements. Measurements shall also be made at the same interval to determine conformance with depth and width of installation requirements. Compression seal that is not in conformance with specification requirements shall be removed and replaced with new joint seal at no additional cost to the Government.

3.5.2.3 Pavement Temperature

The pavement temperature shall be determined by placing a thermometer in the initial saw cut for the joint and the reading shall be recorded. The thermometer shall remain in the joint for an adequate time to provide a control reading.

3.5.3 Final Inspection

The joint sealing system (compression seal and lubricant/adhesive) shall be inspected for proper rate of cure and bonding to the concrete, cuts, twists, nicks and other deficiencies. Seals exhibiting any defects, at any time prior to final acceptance of the project, shall be removed from the joint, wasted, and replaced in a satisfactory manner.

-- End of Section --

SECTION 32 15 00

AGGREGATE SURFACE COURSE

PART 1 GENERAL

1.1 REFERENCES

The publications listed below form a part of this specification to the extent referenced. The publications are referred to within the text by the basic designation only.

ASTM INTERNATIONAL (ASTM)

ASTM C 117	(2004) Standard Test Method for Materials Finer than 75-um (No. 200) Sieve in Mineral Aggregates by Washing
ASTM C 131	(2006)Standard Test Method for Resistance to Degradation of Small-Size Coarse Aggregate by Abrasion and Impact in the Los Angeles Machine
ASTM C 136	(2006) Standard Test Method for Sieve Analysis of Fine and Coarse Aggregates
ASTM D 1556	(2007) Density and Unit Weight of Soil in Place by the Sand-Cone Method
ASTM D 1557	(2009) Standard Test Methods for Laboratory Compaction Characteristics of Soil Using Modified Effort (56,000 ft-lbf/ft3) (2700 kN-m/m3)
ASTM D 3740	(2010) Minimum Requirements for Agencies Engaged in the Testing and/or Inspection of Soil and Rock as Used in Engineering Design and Construction
ASTM D 422	(1963; R 2007) Particle-Size Analysis of Soils
ASTM D 4318	(2010) Liquid Limit, Plastic Limit, and Plasticity Index of Soils
ASTM D 6938	(2010) Standard Test Method for In-Place Density and Water Content of Soil and Soil-Aggregate by Nuclear Methods (Shallow Depth)
ASTM D 75/D 75M	(2009) Standard Practice for Sampling Aggregates
ASTM E 11	(2009) Wire Cloth and Sieves for Testing Purposes

1.2 SUBMITTALS

Government approval is required for submittals with a "G" designation; submittals not having a "G" designation are for information only. When used, a designation following the "G" designation identifies the office that will review the submittal for the Government. Submit the following in accordance with Section 01 33 00 SUBMITTAL PROCEDURES:

SD-03 Product Data

Equipment

List of proposed equipment to be used in performance of construction work including descriptive data.

SD-06 Test Reports

Sampling and Testing
Density Tests

Calibration curves and related test results prior to using the device or equipment being calibrated. Copies of field test results within 24 hours after the tests are performed. Test results from samples, not less than 30 days before material is required for the work. Results of laboratory tests for quality control purposes, for approval, prior to using the material.

1.3 QUALITY ASSURANCE

Sampling and testing is the responsibility of the Contractor. Sampling and testing shall be performed by an approved commercial testing laboratory or by the Contractor, subject to approval. If the Contractor elects to establish its own testing facilities, approval of such facilities will be based on compliance with ASTM D 3740. No work requiring testing will be permitted until the Contractor's facilities have been inspected and approved.

1.3.1 Sampling

Take samples for material gradation, liquid limit, and plastic limit tests in conformance with ASTM D 75/D 75M. When deemed necessary, the sampling will be observed by the Contracting Officer.

1.3.2 Testing

1.3.2.1 Gradation

Make aggregate gradation in conformance with ASTM C 117, ASTM C 136, and ASTM D 422. Sieves shall conform to ASTM E 11.

1.3.2.2 Liquid Limit and Plasticity Index

Determine liquid limit and plasticity index in accordance with ASTM D 4318.

1.3.3 Approval of Materials

Select the source of the material to be used for producing aggregates 30 days prior to the time the material will be required in the work. Approval of sources not already approved by the Corps of Engineers will be based on

an inspection by the Contracting Officer. Tentative approval of materials will be based on appropriate test results on the aggregate source. Final approval of the materials will be based on tests for gradation, liquid limit, and plasticity index performed on samples taken from the completed and compacted surface course.

1.3.4 Equipment

All plant, equipment, and tools used in the performance of the work covered by this section will be subject to approval by the Contracting Officer before the work is started and shall be maintained in satisfactory working condition at all times. The equipment shall be adequate and shall have the capability of producing the required compaction, and meeting the grade controls, thickness controls, and smoothness requirements set forth herein.

1.4 ENVIRONMENTAL REQUIREMENTS

Aggregate surface courses shall not be constructed when the ambient temperatures is below 2 degrees C and on subgrades that are frozen or contain frost. It is the responsibility of the Contractor to protect, by approved method or methods, all areas of surfacing that have not been accepted by the Contracting Officer. Surfaces damaged by freeze, rainfall, or other weather conditions shall be brought to a satisfactory condition by the Contractor.

PART 2 PRODUCTS

2.1 AGGREGATES

Provide aggregates consisting of clean, sound, durable particles of natural gravel, crushed gravel, crushed stone, sand, soil, or other approved materials processed and blended or naturally combined. Provide aggregates free from lumps and balls of clay, organic matter, objectionable coatings, and other foreign materials. The Contractor is responsible for obtaining materials that meet the specification and can be used to meet the grade and smoothness requirements specified herein after all compaction and proof rolling operations have been completed.

2.1.1 Coarse Aggregates

The material retained on the 5 mm sieve shall be known as coarse aggregate. Coarse aggregates shall be reasonably uniform in density and quality. The coarse aggregate shall have a percentage of wear not to exceed 50 percent after 500 revolutions as determined by ASTM C 131. The amount of flat and/or elongated particles shall not exceed 20 percent. A flat particle is one having a ratio of width to thickness greater than three; an elongated particle is one having a ratio of length to width greater than three. When the coarse aggregate is supplied from more than one source, aggregate from each source shall meet the requirements set forth herein.

2.1.2 Fine Aggregates

The material passing the 5 mm sieve shall be known as fine aggregate. Fine aggregate shall consist of screenings, sand, soil, or other finely divided mineral matter that is processed or naturally combined with the coarse aggregate.

2.1.3 Gradation Requirements

Gradation requirements specified in TABLE I shall apply to the completed aggregate surface. It is the responsibility of the Contractor to obtain materials that will meet the gradation requirements after mixing, placing, compacting, and other operations. TABLE I shows permissible gradings for granular material used in aggregate surface roads and airfields. Sieves shall conform to ASTM E 11.

TABLE I. GRADATION FOR AGGREGATE SURFACE COURSES
Percentage by Weight Passing Square-Mesh Sieve

Sieve Designation	No. 1	No. 2	No. 3	No. 4
25.0 mm	100	100	100	100
9.5 mm	50-85	60-100	--	--
4.7 mm	35-65	50-85	55-100	70-100
2.00 mm	25-50	40-70	40-100	55-100
0.425 mm	15-30	24-45	20-50	30-70
0.075 mm	8-15	8-15	8-15	8-15

2.2 LIQUID LIMIT AND PLASTICITY INDEX REQUIREMENTS

The portion of the completed aggregate surface course passing the 0.425 mm sieve shall have a maximum liquid limit of 35 and a plasticity index of 4 to 9.

PART 3 EXECUTION

3.1 OPERATION OF AGGREGATE SOURCES

Perform clearing, stripping, and excavating. Operate the aggregate sources to produce the quantity and quality of materials meeting these specification requirements in the specified time limit. Upon completion of the work, the aggregate sources on Government property shall be finalized to drain readily and be left in a satisfactory condition. Finalize aggregate sources on private lands in agreement with local laws or authorities.

3.2 STOCKPILING MATERIALS

Prior to stockpiling the material, clear and level the storage sites. All materials, including approved material available from excavation and grading, shall be stockpiled in the manner and at the locations designated. Stockpile aggregates in such a manner that will prevent segregation. Aggregates and binders obtained from different sources shall be stockpiled separately.

3.3 COMPACTION

Degree of compaction is a percentage of the maximum density obtained by the test procedure presented in ASTM D 1557 abbreviated herein as present laboratory maximum density. Compact each layer of the aggregate surface course with approved compaction equipment, as required in the following paragraphs. The water content during the compaction procedure shall be maintained at optimum or at the percentage specified by the Contracting Officer. In locations not accessible to the rollers, the mixture shall be

compacted with mechanical tampers. Compaction shall continue until each layer through the full depth is compacted to at least 100 percent of laboratory maximum density. Remove any materials that are found to be unsatisfactory and replace them with satisfactory material or rework them to produce a satisfactory material.

3.4 PREPARATION OF UNDERLYING COURSE SUBGRADE

Clean of all foreign substances the subgrade, including shoulders. At the time of surface course construction, the subgrade shall contain no frozen material. Ruts or soft yielding spots in the subgrade areas having inadequate compaction and deviations of the surface from the requirements set forth herein shall be corrected by loosening and removing soft or unsatisfactory material and by adding approved material, reshaping to line and grade and recompacting to density requirements specified in Section 31 00 00 EARTHWORK. The completed subgrade shall not be disturbed by traffic or other operations and shall be maintained by the Contractor in a satisfactory condition until the surface course is placed.

3.5 GRADE CONTROL

During construction, the lines and grades including crown and cross slope indicated for the aggregate surface course shall be maintained by means of line and grade stakes placed by the Contractor in accordance with the SPECIAL CONTRACT REQUIREMENTS.

3.6 MIXING AND PLACING MATERIALS

The materials shall be mixed and placed to obtain uniformity of the material and a uniform optimum water content for compaction. Make adjustments in mixing, placing procedures, or in equipment to obtain the true grades, to minimize segregation and degradation, to obtain the desired water content, and to ensure a satisfactory surface course.

3.7 LAYER THICKNESS

Place the aggregate material on the subgrade in layers of uniform thickness. When a compacted layer of 150 mm or less is specified, the material may be placed in a single layer; when a compacted thickness of more than 150 mm is required, no layer shall exceed 150 mm nor be less than 75 mm when compacted.

3.8 PROOF ROLLING

Proof rolling of the areas designated shall be in addition to compaction specified above and shall consist of application of 30 coverages with a heavy rubber-tired roller having four tires abreast with each tire loaded to 13,600 kg and tires inflated to 1000 kPa. In the areas designated, proof rolling shall be applied to the top lift of layer on which surface course is laid and to each layer of the base course. Water content of the lift of the layer on which the surface course is placed and each layer of the aggregate surface course shall be maintained at optimum or at the percentage directed from the start of compaction to the completion of a proof rolling. Materials in the aggregate surface course or underlying materials indicated unacceptable by the proof rolling shall be removed and replaced, as directed, with acceptable materials.

3.9 EDGES OF AGGREGATE-SURFACED ROAD

Approved material shall be placed along the edges of the aggregate surface course in such quantity as to compact to the thickness of the course being constructed. When the course is being constructed in two or more layers, at least 300 mm of shoulder width shall be rolled and compacted simultaneously with the rolling and compacting of each layer of the surface course.

3.10 SMOOTHNESS TEST

The surface of each layer shall not show any deviations in excess of 10 mm when tested with a 3 m straightedge applied both parallel with and at right angles to the centerline of the area to be paved. Deviations exceeding this amount shall be corrected by removing material, replacing with new material, or reworking existing material and compacting, as directed.

3.11 THICKNESS CONTROL

The completed thickness of the aggregate surface course shall be within 13 mm, plus or minus, of the thickness indicated on plans. The thickness of the aggregate surface course shall be measured at intervals in such manner that there will be a thickness measurement for at least each 500 square meters of the aggregate surface course. The thickness measurement shall be made by test holes at least 75 mm in diameter through the aggregate surface course. When the measured thickness of the aggregate surface course is more than 13 mm deficient in thickness, correct such areas by scarifying, adding mixture of proper gradation, reblading, and recompacting, as directed,at no additional expense to the Government. Where the measured thickness of the aggregate surface course is more than 13 mm thicker than that indicated, it shall be considered as conforming with the specified thickness requirements plus 13 mm. The average job thickness shall be the average of the job measurements determined as specified above, but shall be within 6 mm of the thickness indicated. When the average job thickness fails to meet this criterion, make corrections by scarifying, adding or removing mixture of proper gradation, and reblading and recompacting, as directed, at no additional expense to the Government.

3.12 DENSITY TESTS

Measure density in the field in accordance with ASTM D 1556 and ASTM D 6938. For the method presented in ASTM D 1556 use the base plate as shown in the drawing. For the method presented in ASTM D 6938 the calibration curves shall be checked and adjusted, if necessary, using only the sand cone method as described in paragraph Calibration of the ASTM publication. Tests performed in accordance with ASTM D 6938 result in a wet unit weight of soil and ASTM D 6938 shall be used to determine the moisture content of the soil. The calibration curves furnished with the moisture gauges shall also be checked along with density calibration checks as described in ASTM D 6938. The calibration checks of both the density and moisture gauges shall be made by the prepared containers of material method, as described in paragraph Calibration of ASTM D 6938, on each different type of material being tested at the beginning of a job and at intervals, as directed.

3.13 WEAR TEST

Perform wear tests in conformance with ASTM C 131.

3.14 MAINTENANCE

Maintain the aggregate surface course in a condition that will meet all specification requirements until accepted.

-- End of Section --

SECTION 32 17 24.00 10

PAVEMENT MARKINGS

PART 1 GENERAL

1.1 REFERENCES

The publications listed below form a part of this specification to the extent referenced. The publications are referred to in the text by the basic designation only.

U.S. GENERAL SERVICES ADMINISTRATION (GSA)

FS TT-B-1325	(Rev C) Beads (Glass Spheres) Retro-Reflective (Metric)
FS TT-P-1952	(Rev D) Paint, Traffic and Airfield Markings, Waterborne

1.2 SYSTEM DESCRIPTION

All machines, tools and equipment used in the performance of the work shall be approved and maintained in satisfactory operating condition. Equipment operating on roads and airfield pavement shall display low speed traffic markings and traffic warning lights.

1.2.1 Paint Application Equipment

1.2.1.1 Self-Propelled or Mobile-Drawn Pneumatic Spraying Machines

The equipment to apply paint to pavements shall be a self-propelled or mobile-drawn pneumatic spraying machine with suitable arrangements of atomizing nozzles and controls to obtain the specified results. The machine shall have a speed during application not less than 8 km/hour, and shall be capable of applying the stripe widths indicated, at the paint coverage rate specified in paragraph APPLICATION, and of even uniform thickness with clear-cut edges. The equipment used to apply the paint binder to airfield pavements shall be a self-propelled or mobile-drawn pneumatic spraying machine with an arrangement of atomizing nozzles capable of applying a line width at any one time in multiples of 150 mm, from 150 mm to 900 mm]. The paint applicator shall have paint reservoirs or tanks of sufficient capacity and suitable gauges to apply paint in accordance with requirements specified. Tanks shall be equipped with suitable air-driven mechanical agitators. The spray mechanism shall be equipped with quick-action valves conveniently located, and shall include necessary pressure regulators and gauges in full view and reach of the operator. Paint strainers shall be installed in paint supply lines to ensure freedom from residue and foreign matter that may cause malfunction of the spray guns. The paint applicator shall be readily adaptable for attachment of an air-actuated dispenser for the reflective media approved for use. Pneumatic spray guns shall be provided for hand application of paint in areas where the mobile paint applicator cannot be used.

1.2.1.2 Hand-Operated, Push-Type Machines

All machines, tools, and equipment used in performance of the work shall be approved and maintained in satisfactory operating condition. Hand-operated push-type machines of a type commonly used for application of paint to pavement surfaces will be acceptable for marking small streets and parking areas. Applicator machine shall be equipped with the necessary paint tanks and spraying nozzles, and shall be capable of applying paint uniformly at coverage specified. Sandblasting equipment shall be provided as required for cleaning surfaces to be painted. Hand-operated spray guns shall be provided for use in areas where push-type machines cannot be used.

1.2.2 Reflective Media Dispenser

The dispenser for applying the reflective media shall be attached to the paint dispenser and shall operate automatically and simultaneously with the applicator through the same control mechanism. The dispenser shall be capable of adjustment and designed to provide uniform flow of reflective media over the full length and width of the stripe at the rate of coverage specified in paragraph APPLICATION, at all operating speeds of the applicator to which it is attached.

1.2.3 Surface Preparation Equipment

1.2.3.1 Sandblasting Equipment

Sandblasting equipment shall include an air compressor, hoses, and nozzles of proper size and capacity as required for cleaning surfaces to be painted. The compressor shall be capable of furnishing not less than 70.8 L/sec of air at a pressure of not less than 620 kPa at each nozzle used, and shall be equipped with traps that will maintain the compressed air free of oil and water.

1.2.3.2 Waterblast Equipment

The water pressure shall be specified at 17.9 MPa at 60 degrees C in order to adequately clean the surfaces to be marked.

1.2.4 Marking Removal Equipment

Equipment shall be mounted on rubber tires and shall be capable of removing markings from the pavement without damaging the pavement surface or joint sealant. Waterblasting equipment shall be capable of producing an adjustable, pressurized stream of water. Sandblasting equipment shall include an air compressor, hoses, and nozzles. The compressor shall be equipped with traps to maintain the air free of oil and water.

1.2.4.1 Shotblasting Equipment

Shotblasting equipment shall be capable of producing an adjustable depth of removal of marking and pavement. Each unit shall be self-cleaning and self-contained, shall be able to confine dust and debris from the operation, and shall be capable of recycling the abrasive for reuse.

1.2.4.2 Chemical Equipment

Chemical equipment shall be capable of application and removal of chemicals from the pavement surface, and shall leave only non-toxic biodegradeable residue.

1.3 SUBMITTALS

Government approval is required for submittals with a "G" designation; submittals not having a "G" designation are for information only. When used, a designation following the "G" designation identifies the office that will review the submittal for the Government. Submit the following in accordance with Section 01 33 00 SUBMITTAL PROCEDURES:

SD-03 Product Data

Reflective media for airfields; G MED

Reflective media for roads and streets; G MED

Paints for airfields; G TAC

Paints for roads and streets; G MED

Equipment; G RE

Lists of proposed equipment, including descriptive data, and notifications of proposed Contractor actions as specified in this section. List of removal equipment shall include descriptive data indicating area of coverage per pass, pressure adjustment range, tank and flow capacities, and safety precautions required for the equipment operation.

Composition Requirements

Manufacturer's current printed product description and Material Safety Data Sheets (MSDS) for each type paint/color proposed for use.

Qualifications

Documentation on personnel qualifications, as specified.

SD-06 Test Reports

Sampling and Testing

Certified copies of the test reports, prior to the use of the materials at the jobsite. Testing shall be performed in an approved independent laboratory.

SD-07 Certificates

Volatile Organic Compound (VOC)

Certificate stating that the proposed pavement marking paint meets the VOC regulations of the local Air Pollution Control District having jurisdiction over the geographical area in which the project is located.

SD-08 Manufacturer's Instructions

Paints for airfields

Paints for roads and streets

Submit manufacturer's Material Safety Data Sheets.
Submit mixing, thinning and application instructions.

1.4 QUALITY ASSURANCE

1.4.1 Qualifications

Submit documentation certifying that pertinent personnel are qualified for equipment operation and handling of chemicals.

1.4.2 Traffic Controls

Suitable warning signs shall be placed near the beginning of the worksite and well ahead of the worksite for alerting approaching traffic from both directions. Small markers shall be placed along newly painted lines or freshly placed raised markers to control traffic and prevent damage to newly painted surfaces or displacement of raised pavement markers. Painting equipment shall be marked with large warning signs indicating slow-moving painting equipment in operation.

1.4.3 Maintenance of Traffic

1.4.3.1 Airfield

The performance of work in the controlled zones of airfields shall be coordinated with the Contracting Officer and with the Flight Operations Officer. Verbal communications shall be maintained with the control tower before and during work in the controlled zones of the airfield. The control tower shall be advised when the work is completed. A radio for this purpose shall be provided by the Contractor and approved by the Contracting Officer.

1.4.3.2 Roads, Streets, and Parking Areas

When traffic must be rerouted or controlled to accomplish the work, the necessary warning signs, flagpersons, and related equipment for the safe passage of vehicles shall be provided.

1.4.3.3 Lighting

When night operations are necessary, all necessary lighting and equipment shall be provided. Lighting shall be directed or shaded to prevent interference with aircraft, the air traffic control tower, and other base operations. All lighting and related equipment shall be capable of being removed from the runway within 15 minutes of notification of an emergency. Night work must be coordinated with the Airfield Manager and approved in advance by the Contracting Officer or authorized representative. The Government reserves the right to accept or reject night work on the day following night activities by the Contractor.

1.5 DELIVERY, STORAGE, AND HANDLING

All materials shall be delivered and stored in sealed containers that plainly show the designated name, formula or specification number, batch number, color, date of manufacture, manufacturer's name, and directions, all of which shall be plainly legible at time of use.

1.6 ENVIRONMENTAL REQUIREMENTS

Pavement surface shall be free of snow, ice, or slush. Surface temperature shall be at least 5 degrees C and rising at the beginning of operations, except those involving shot or sand blasting. Operation shall cease during thunderstorms. Operation shall cease during rainfall, except for waterblasting and removal of previously applied chemicals. Waterblasting shall cease where surface water accumulation alters the effectiveness of material removal.

PART 2 PRODUCTS

2.1 PAINT

The paint shall be homogeneous, easily stirred to smooth consistency, and shall show no hard settlement or other objectionable characteristics during a storage period of 6 months. Paints for airfields, roads, parking areas, and streets shall conform to FS TT-P-1952, color as indicated.

2.2 REFLECTIVE MEDIA

Reflective media for airfields shall conform to FS TT-B-1325, Type I, Gradation A. Reflective media for roads and streets shall conform to FS TT-B-1325, Type I, Gradation A.

2.3 SAMPLING AND TESTING

Materials proposed for use shall be stored on the project site in sealed and labeled containers, or segregated at source of supply, sufficiently in advance of needs to allow 60 days for testing. Upon notification by the Contractor that the material is at the site or source of supply, a sample shall be taken by random selection from sealed containers in the presence of the Contracting Officer. Samples shall be clearly identified by designated name, specification number, batch number, manufacturer's formulation number, project contract number, intended use, and quantity involved. No material shall be used at the project prior to receipt by the Contractor of written notice that the materials meet the laboratory requirements. Testing shall be performed in an approved independent laboratory. If materials are approved based on reports furnished by the Contractor, samples will be retained by the Government for possible future testing should the material appear defective during or after application.

PART 3 EXECUTION

3.1 SURFACE PREPARATION

Thoroughly clean surfaces to be marked before application of the pavement marking material. Dust, dirt, and other granular surface deposits shall be removed by sweeping, blowing with compressed air, rinsing with water or a combination of these methods as required. Rubber deposits, surface laitance, existing paint markings, and other coatings adhering to the pavement shall be completely removed with scrapers, wire brushes, sandblasting, approved chemicals, or mechanical abrasion as directed. Areas of old pavement affected with oil or grease shall be scrubbed with several applications of trisodium phosphate solution or other approved detergent or degreaser, and rinsed thoroughly after each application. After cleaning, oil-soaked areas shall be sealed with cut shellac to prevent bleeding through the new paint. Pavement surfaces shall be allowed to dry, when water is used for cleaning, prior to striping or marking.

Surfaces shall be recleaned, when work has been stopped due to rain.

3.1.1 Pretreatment for Early Painting

Where early painting is required on rigid pavements prior to 30 day curing of concrete, temporary markings with paint conforming to FS TT-P-1952, shall be placed. Temporary markings shall not be placed prior to completion of 7 days of concrete curing. Leave curing compound on. Apply paint at 1/2 the normal application rate. Apply glass beads at 1/2 the normal application rate. After 30 days remove the paint, beads and curing compound (with water blasting or sand blasting) and apply new marking and glass beads per the marking specification. This provision only applies to rigid concrete pavements. No markings shall be placed on asphalt pavements prior to completion of 30 days.

3.1.2 Cleaning Existing Pavement Markings

In general, markings shall not be placed over existing pavement marking patterns. Remove existing pavement markings, which are in good condition but interfere or conflict with the newly applied marking patterns. Deteriorated or obscured markings that are not misleading or confusing or interfere with the adhesion of the new marking material do not require removal. Whenever grinding, scraping, sandblasting or other operations are performed the work must be conducted in such a manner that the finished pavement surface is not damaged or left in a pattern that is misleading or confusing. When these operations are completed the pavement surface shall be blown off with compressed air to remove residue and debris resulting from the cleaning work.

3.1.3 Cleaning Concrete Curing Compounds

On new portland cement concrete pavements, cleaning operations shall not begin until a minimum of 30 days after the placement of concrete. All new concrete pavements shall be cleaned by either sandblasting or water blasting. The extent of the blasting work shall be to clean and prepare the concrete surface as follows:

a. There is no visible evidence of curing compound on the peaks of the textured concrete surface.

b. There are no heavy puddled deposits of curing compound in the valleys of the textured concrete surface.

c. All remaining curing compound is intact; all loose and flaking material is removed.

d. The peaks of the textured pavement surface are rounded in profile and free of sharp edges and irregularities.

e. The surface to be marked is dry.

3.2 APPLICATION

All pavement markings and patterns shall be placed as shown on the plans.

3.2.1 Paint

Paint shall be applied to clean, dry surfaces, and only when air and pavement temperatures are above 5 degrees C and less than 35 degrees C.

Paint temperature shall be maintained within these same limits. New asphalt pavement surfaces and new Portland concrete cement shall be allowed to cure for a period of not less than 30 days before applications of paint. Paint shall be applied pneumatically with approved equipment at rate of coverage specified . Provide guide lines and templates as necessary to control paint application. Special precautions shall be taken in marking numbers, letters, and symbols. Edges of markings shall be sharply outlined.

3.2.1.1 Rate of Application

a. Reflective Markings: Pigmented binder shall be applied evenly to the pavement area to be coated at a rate of 2.9 plus or minus 0.13 square meter/L. Glass spheres shall be applied uniformly to the wet paint on airfield pavement at a rate of 1.0 plus or minus 0.06 kg of glass spheres per L of paint. On roads the rate shall be 0.72 plus or minus 0.06 kg of glass spheres per L of paint.

b. Nonreflective Markings: Paint shall be applied evenly to the pavement surface to be coated at a rate of 2.9 plus or minus 0.5 square meter/L.

3.2.1.2 Drying

The maximum drying time requirements of the paint specifications will be strictly enforced to prevent undue softening of bitumen, and pickup, displacement, or discoloration by tires of traffic. If there is a delay in drying of the markings, painting operations shall be discontinued until cause of the slow drying is determined and corrected.

3.2.2 Reflective Media

Application of reflective media shall immediately follow application of pigmented binder. Drop-on application of glass spheres shall be accomplished to insure that reflective media is evenly distributed at the specified rate of coverage. Should there be malfunction of either paint applicator or reflective media dispenser, operations shall be discontinued immediately until deficiency is corrected.

3.3 MARKING REMOVAL

Pavement marking shall be removed in the areas shown on the drawings. Removal of marking shall be as complete as possible without damage to the surface. Aggregate shall not be exposed by the removal process. After the markings are removed, the cleaned pavement surfaces shall exhibit adequate texture for remarking as specified in paragraph SURFACE PREPARATION. Demonstrate removal of pavement marking in an area designated by the Contracting Officer. The demonstration area will become the standard for the remainder of the work.

3.3.1 Equipment Operation

Equipment shall be controlled and operated to remove markings from the pavement surface, prevent dilution or removal of binder from underlying pavement, and prevent emission of blue smoke from asphalt or tar surfaces.

3.3.2 Cleanup and Waste Disposal

The worksite shall be kept clean of debris and waste from the removal

operations. Cleanup shall immediately follow removal operations in areas subject to air traffic. Debris shall be disposed of at approved sites.

-- End of Section --

SECTION 34 73 13

MOORING AND GROUNDING POINTS FOR AIRCRAFT

PART 1 GENERAL

1.1 REFERENCES

The publications listed below form a part of this specification to the extent referenced. The publications are referred to within the text by the basic designation only.

AMERICAN WELDING SOCIETY (AWS)

AWS D1.4/D1.4M	(2005; Errata 2005) Structural Welding Code - Reinforcing Steel

ASTM INTERNATIONAL (ASTM)

ASTM A 615/A 615M	(2009b) Standard Specification for Deformed and Plain Carbon-Steel Bars for Concrete Reinforcement
ASTM B 371/B 371M	(2008) Standard Specification for Copper-Zinc-Silicon Alloy Rod
ASTM B 8	(2004) Standard Specification for Concentric-Lay-Stranded Copper Conductors, Hard, Medium-Hard, or Soft

NATIONAL FIRE PROTECTION ASSOCIATION (NFPA)

NFPA 407	(2007; Errata 2007; AMD 1 2007; AMD 2 2008; AMD 3 2009) Standard for Aircraft Fuel Servicing

UNDERWRITERS LABORATORIES (UL)

UL 467	(2007) Standard for Grounding and Bonding Equipment

1.2 SUBMITTALS

Government approval is required for submittals with a "G" designation; submittals not having a "G" designation are for information only. When used, a designation following the "G" designation identifies the office that will review the submittal for the Government. The following shall be submitted in accordance with Section 01 33 00 SUBMITTAL PROCEDURES:

SD-02 Shop Drawings

As-Built Drawings; G

Drawings as specified.

SD-06 Test Reports

Concrete; G

Complete concrete mix design including all cement, aggregate, and concrete tests and compliance certificates.

Tests

An independent testing agency's certified reports of inspections and tests, including analysis and interpretation of test results. Each report shall be properly identified. Describe Test methods and standards used.

SD-07 Certificates

Mooring Devices

Certificate of compliance stating that the mooring devices meet the specified requirements.

Grounding Rods

Certificate of compliance stating that the grounding rods meet the specified requirements.

Grounding Connectors

Certificate of compliance stating that the grounding connectors meet the specified requirements.

Copper Conductors

Certificate of compliance stating that the copper conductors meet the specified requirements.

Reinforcing Steel

Certificate of compliance stating that the reinforcing steel meets the specified requirements.

1.3 AS-BUILT DRAWINGS

Submit AS-Built Drawings that provide current factual information, including deviations from and amendments to the drawings and changes in the work, concealed and visible.

PART 2 PRODUCTS

2.1 METALS

Do not use combination of materials that forms an electrolytic couple, which accelerates corrosion in the presence of moisture, unless moisture is permanently excluded from the junction of such metals.

2.2 MOORING DEVICES

Mooring devices shall be as shown on the contract drawings. The device shall be as shown in the contract drawings. Submit certificates of compliance on the devices.

2.3 GROUNDING RODS

Grounding rods shall conform to UL 467 and shall be made of copper-clad steel. The rods shall be not less than 19 mm in diameter and not less than 3 m long. Harger Part No. 3410TD tie down ground rod and Part No. TDGRDM tie down plastic mold shall be used. The copper cladding shall conform to the applicable requirements of ASTM B 371/B 371M, Copper Alloy UNS No's. c 69400, c 69430, c 69440 or c 69450. The copper cladding shall be not less than 0.25 mm thick at any point and shall comply with adherence requirements and the banding requirements of UL 467. Submit certificates of compliance on the grounding rods. Rods shall be provided with a closed eye or shepherd's hook bend having an inside diameter of not less than 32 mm. The rods shall be pointed unless used for flexible pavement. For flexible pavement, the rods shall have 19 mm American standard rolled threads for attachment of a bottom anchor and shall be equipped with a screw-type bottom having a wing diameter of not less than 152 mm.

2.4 COPPER CONDUCTORS

Copper conductors shall be bare number 4 AWG copper wire conforming to ASTM B 8. Submit certificates of compliance on the copper conductors.

2.5 GROUNDING CONNECTORS

Grounding connectors shall comply with UL 467 for the required application. Submit certificates of compliance on the grounding connectors.

2.6 CONCRETE

Concrete shall be in accordance with Section 32 13 11 CONCRETE PAVEMENT FOR AIRFIELDS AND OTHER HEAVY-DUTY PAVEMENTS .

2.7 REINFORCING STEEL

Reinforcing steel shall conform to ASTM A 615/A 615M Grade 40 or 60 for #4 tie bars and Grade 60 for #6 vertical bars. Steel shall be welded into cages in accordance with AWS D1.4/D1.4M and inserted securely in the piers, in position and alignment, as shown, prior to concrete placement. Submit certificates of compliance of the reinforcing steel.

PART 3 EXECUTION

3.1 MOORING POINTS IN NEW RIGID PAVEMENTS OR CONCRETE PADS

Install the mooring device within plus or minus 50 mm of the location shown on the contract drawings. The top of the mooring device shall be set within 6 mm of the plan pavement surface elevation, but not higher than the pavement surface. Install the mooring device prior to placement of the concrete pavement. Place concrete and reinforcement in accordance with Section 32 13 11 CONCRETE PAVEMENT FOR AIRFIELD AND OTHER HEAVY-DUTY PAVEMENTS. Hand finishing of the concrete around the mooring devices shall be kept to a minimum.

3.2 GROUNDING POINTS

Locate the grounding points as shown on the contract drawings to within plus or minus 50 mm.

3.2.1 Pavement Recess

The top of the grounding rod shall be set at or not more than 6 mm below the pavement surface grade. A recess 70 mm wide, and not more than 150 mm long, with a smooth rounded edge shall be provided in the pavement around the grounding point anchor eye to permit the entrance of lines into the eye and to allow for attachment of the grounding cable. The depth of the recess shall be no deeper than the bottom of the opening of the grounding point eye.

3.2.2 Installation

3.2.2.1 New Rigid Pavement

Install the grounding rod by pushing or driving the rod through the pavement base courses and subgrade prior to concrete placement. The installation technique chosen shall not damage the grounding rod. Hand finishing around the rod shall be kept to a minimum.

3.2.3 Interconnection

Grounding rods within aircraft hangars shall be electrically interconnected to the hangar electrical grounding system with not less than a number 4 AWG bare copper conductor. Grounding rods installed at fueling hydrant outlets shall be electrically interconnected with the fuel piping with not less than a number 4 AWG bare copper conductor.

3.3 TESTS

Measure resistance to ground tests as specified in NFPA 407. Submit test results to the Contracting Officer. Report to the Contracting Officer, immediately, any ground rods that have more than 10,000 ohms of resistance.

-- End of Section --

POSTED 11/16/11

SOF Helicopter Apron

Herat, Afghanistan
November 16, 2011

US Army Corps of Engineers
Middle East District

TETRA TECH

Solicitation
W519LE-12-R-0007
Final Corrected Design Update 3

W:\23308\127-23308-11010\CAD\WED_Drawings\General\AF1139--G-COVRGN.dwg 11/15/2011 6:10:52 PM Barrett, Patrick

INDEX OF DRAWINGS

SHEET REF. NUMBER	FILE NUMBER	REVISIONS REV. NO.	REVISIONS AM/COP NO.	TITLE
	AF1139--GI001GN	3		INDEX OF DRAWINGS
				SITE DESIGN
				SITE CIVIL
C-001	AF1139--CS001GN	3		LOCUS PLAN
C-101	AF1139--CD101PN	3		DEMOLITION PLAN BASE BID
C-102	AF1139--CD102PN	3		DEMOLITION PLAN OPTION 1
C-110	AF1139--CS110PN	3		SITE PLAN BASE BID
C-111	AF1139--CS111PN	3		SITE PLAN OPTION 1
C-115	AF1139--CS115PN	3		PAVEMENT MARKING PLAN BASE BID
C-116	AF1139--CS116PN	3		PAVEMENT MARKING PLAN OPTION 1
C-501	AF1139--CI501DT	3		TYPICAL APRON PAVEMENT SECTION
C-502	AF1139--CI502DT	3		CONCRETE JOINT DETAILS
C-503	AF1139--CI503DT	3		PAVEMENT MARKING DETAILS
C-504	AF1139--CI504DT	3		TIE DOWN DETAILS
				SITE TELECOMMUNICATIONS
XT-501	AF1139--XT501DT	3		COMMUNICATION DETAILS SHEET 1 OF 4
XT-502	AF1139--XT502DT	3		COMMUNICATION DETAILS SHEET 2 OF 4
XT-503	AF1139--XT503DT	3		COMMUNICATION DETAILS SHEET 3 OF 4
XT-504	AF1139--XT504DT	3		COMMUNICATION DETAILS SHEET 4 OF 4
				AIRCRAFT PARKING SHELTER - FACILITY A
				ARCHITECTURAL
A-101	AF1139A-AE101PN	3		FLOOR PLAN
A-201	AF1139A-AE201EL	3		BUILDING ELEVATIONS
A-301	AF1139A-AE301SE	3		BUILDING SECTION

FINAL CORRECTED DESIGN UPDATE 3

SYMB	DESCRIPTION	DATE	APR
3	FINAL CORRECTED DESIGN UPDATE 3	11/16/11	GCH
2	FINAL CORRECTED DESIGN UPDATE 2	11/10/11	GCH
1	FINAL CORRECTED DESIGN UPDATE 1	10/31/11	GCH
0	FINAL CORRECTED DESIGN SUBMITTAL	10/06/11	GCH
B	FINAL DESIGN SUBMITTAL	09/21/11	GCH
A	50% DESIGN SUBMITTAL	08/24/11	GCH

DESIGNED BY: SPD
DATE: 11-16-11
DRAWN BY: SCJ
SUBMITTED BY: TETRA TECH
CHECKED BY: GCH
FILE NO.: AF1139--GI001GN

TETRA TECH

US Army Corps of Engineers
Middle East District

SOF HELICOPTER APRON
FOB HERAT
HERAT PROVINCE, AFGHANISTAN

INDEX OF DRAWINGS

SHEET REFERENCE NUMBER:

NOT FOR CONSTRUCTION

W:\23308\127-23308-11010\CAD\MED_Drawings\General\AF1139---GI001GN.dwg 11/15/2011 6:11:11 PM Barrett, Patrick

REGIONAL LOCUS PLAN
NTS

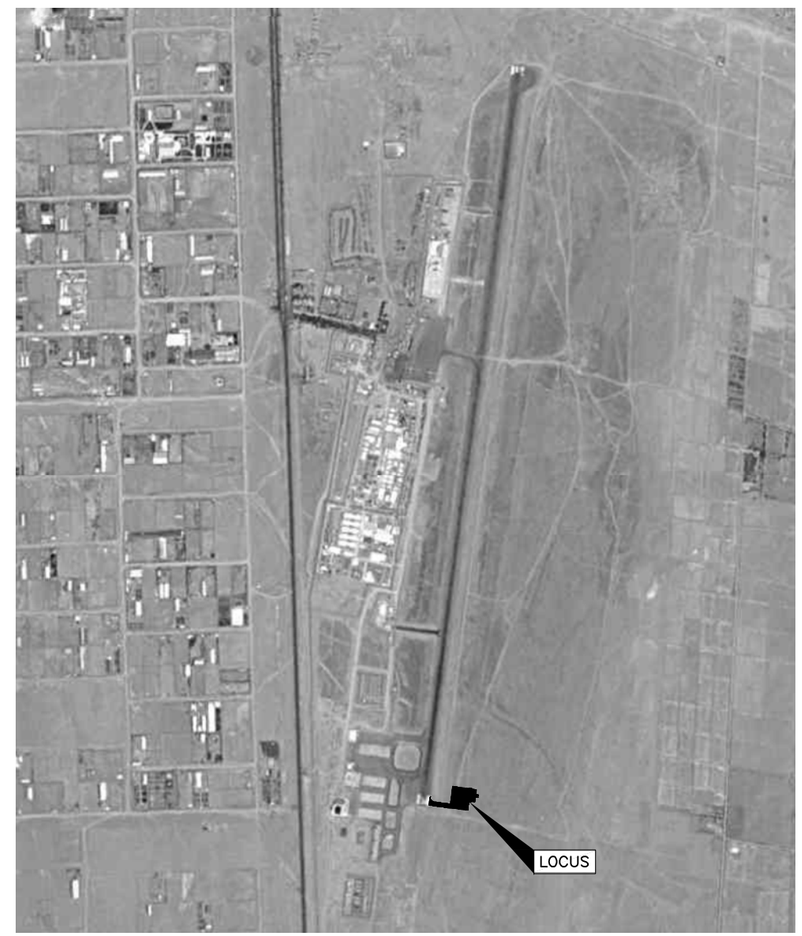

ENLARGED LOCUS PLAN
NTS

UNLESS OTHERWISE NOTED, ALL LINEAR DIMENSIONS SHOWN ARE IN METERS.

FINAL CORRECTED DESIGN UPDATE 3

SYMB	DESCRIPTION	DATE	APR
3	FINAL CORRECTED DESIGN UPDATE 3	11/16/11	GCH
2	FINAL CORRECTED DESIGN UPDATE 2	11/10/11	GCH
1	FINAL CORRECTED DESIGN UPDATE 1	10/31/11	GCH
0	FINAL CORRECTED DESIGN SUBMITTAL	10/06/11	GCH
B	FINAL DESIGN SUBMITTAL	09/21/11	GCH
A	50% DESIGN SUBMITTAL	08/24/11	GCH

DESIGNED BY: SPD
DATE: 11-16-11
DRAWN BY: SCJ
SUBMITTED BY: TETRA TECH
CHECKED BY: GCH
FILE NO.: AF1139--CSDDIGN

TETRA TECH

US Army Corps of Engineers
Middle East District

SOF HELICOPTER APRON
FOB HERAT
HERAT PROVINCE, AFGHANISTAN
SITE DESIGN
LOCUS PLAN

SHEET REFERENCE NUMBER:
-
C-001

NOT FOR CONSTRUCTION

W:\23308\127-23308-11010\CAD\MED_Drawings\Site Design\Civil\AF1139--CS001GN.dwg 11/15/2011 5:46:39 PM Barrett, Patrick

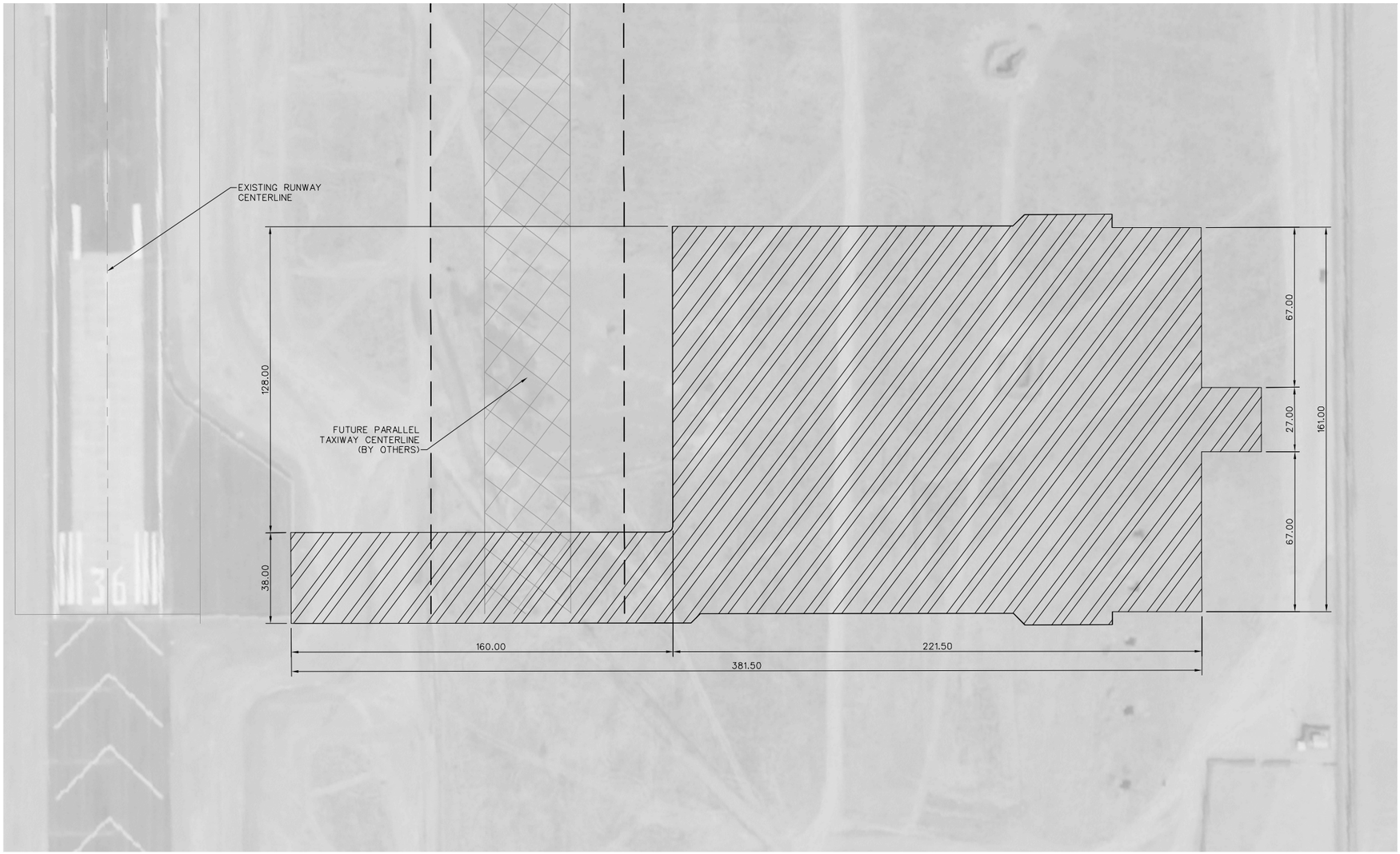

N

NOTES:

1. PLAN IS CONCEPTUAL AND THE FINAL DESIGN IS TO BE PERFORMED BY THE DESIGN/BUILD CONTRACTOR TO COMPLY WITH THE RFP, SPECIFICATION 01 80 00.12 10 AND ALL APPLICABLE CODES
2. THE DEMOLITION PLAN IS REPRESENTATIVE OF THE BASE BID.
3. SITE LIMITS BASED ON INFORMATION PROVIDED BY GOVERNMENT OFFICIALS. LOCATIONS OF ALL EXISTING UTILITIES/OBSTRUCTIONS/SYSTEMS SHOWN HEREON ARE APPROXIMATE ONLY. ALL UTILITIES/OBSTRUCTIONS/SYSTEMS MAY NOT BE SHOWN. CONTRACTOR SHALL BE RESPONSIBLE FOR LOCATING AND PROTECTING ALL UTILITIES/OBSTRUCTIONS/SYSTEMS WHETHER SHOWN OR NOT SHOWN.
4. HATCHED AREA IS TO BE CLEARED FOR CONSTRUCTION OF PROPOSED IMPROVEMENTS. EXISTING FACILITIES WITHIN DEMOLITION AREA ARE CONSIDERED TEMPORARY STRUCTURES REQUIRING REMOVAL OR DEMOLITION BY THE CONTRACTOR. THE CONTRACTOR SHALL COORDINATE WITH THE CONTRACTING OFFICER FOR SPECIFIC REQUIREMENTS ASSOCIATED WITH THESE FACILITIES PRIOR TO INITIATING REMOVAL OR DEMOLITION ACTIVITIES.
5. CONTRACTOR SHALL ENSURE THAT ALL EXISTING CONCRETE AND ASPHALT PAVING, SLABS AND AGGREGATE BASE HAS BEEN SAWCUT AND REMOVED CONTIGUOUS TO SITE LIMITS.
6. CONSTRUCTION DEBRIS, INCLUDING BROKEN PAVEMENT, SHALL BE TRANSPORTED TO OFFSITE DISPOSAL AREA IN COORDINATION WITH CONTRACTING OFFICER.
7. CONTRACTOR TO ENSURE THAT TREES AND GRUB ARE CLEARED AS REQUIRED. COORDINATE LIMITS OF TREE REMOVAL, PRUNING, CLEARING AND GRUBBING WITH THE CONTRACTING OFFICER.
8. CONTRACTOR SHALL ENSURE THAT ALL EXISTING DRAIN PIPE AND MANHOLES LOCATED WITHIN SITE LIMITS THAT ARE PROPOSED TO BE ABANDONED HAVE BEEN BACKFILLED WITH COMPACTED BACKFILL PER SPECIFICATIONS.
9. CONTRACTOR IS TO PROTECT ALL UTILITIES TO REMAIN AND MAINTAIN UTILITY SERVICE THROUGHOUT CONSTRUCTION.

LEGEND

LIMITS OF FUTURE PROJECT BY OTHERS

DEMOLITION AREA

50 25 0 25 50
1:1000

UNLESS OTHERWISE NOTED, ALL LINEAR DIMENSIONS SHOWN ARE IN METERS.

FINAL CORRECTED DESIGN UPDATE 3

SYMB	DESCRIPTION	DATE	APR
3	FINAL CORRECTED DESIGN UPDATE 3	11/16/11	GCH
2	FINAL CORRECTED DESIGN UPDATE 2	11/10/11	GCH
1	FINAL CORRECTED DESIGN UPDATE 1	10/31/11	GCH
0	FINAL CORRECTED DESIGN SUBMITTAL	10/06/11	GCH
A	FINAL DESIGN SUBMITTAL	09/21/11	GCH

DESIGNED BY: SPD
DATE: 11-16-11
DRAWN BY: SCJ
SUBMITTED BY: TETRA TECH
CHECKED BY: GCH
FILE NO.: AF1139--CD101PN

TETRA TECH

US Army Corps of Engineers
Middle East District

SOF HELICOPTER APRON
FOB HERAT
HERAT PROVINCE, AFGHANISTAN
SITE DESIGN
DEMOLITION PLAN
BASE BID

SHEET REFERENCE NUMBER:
–
C-101

NOT FOR CONSTRUCTION

W:\23308\127-23308-11010\CAD\MED_Drawings\Site Design\Civil\AF1139--CD101PN.dwg 11/15/2011 5:46:57 PM Barrett, Patrick

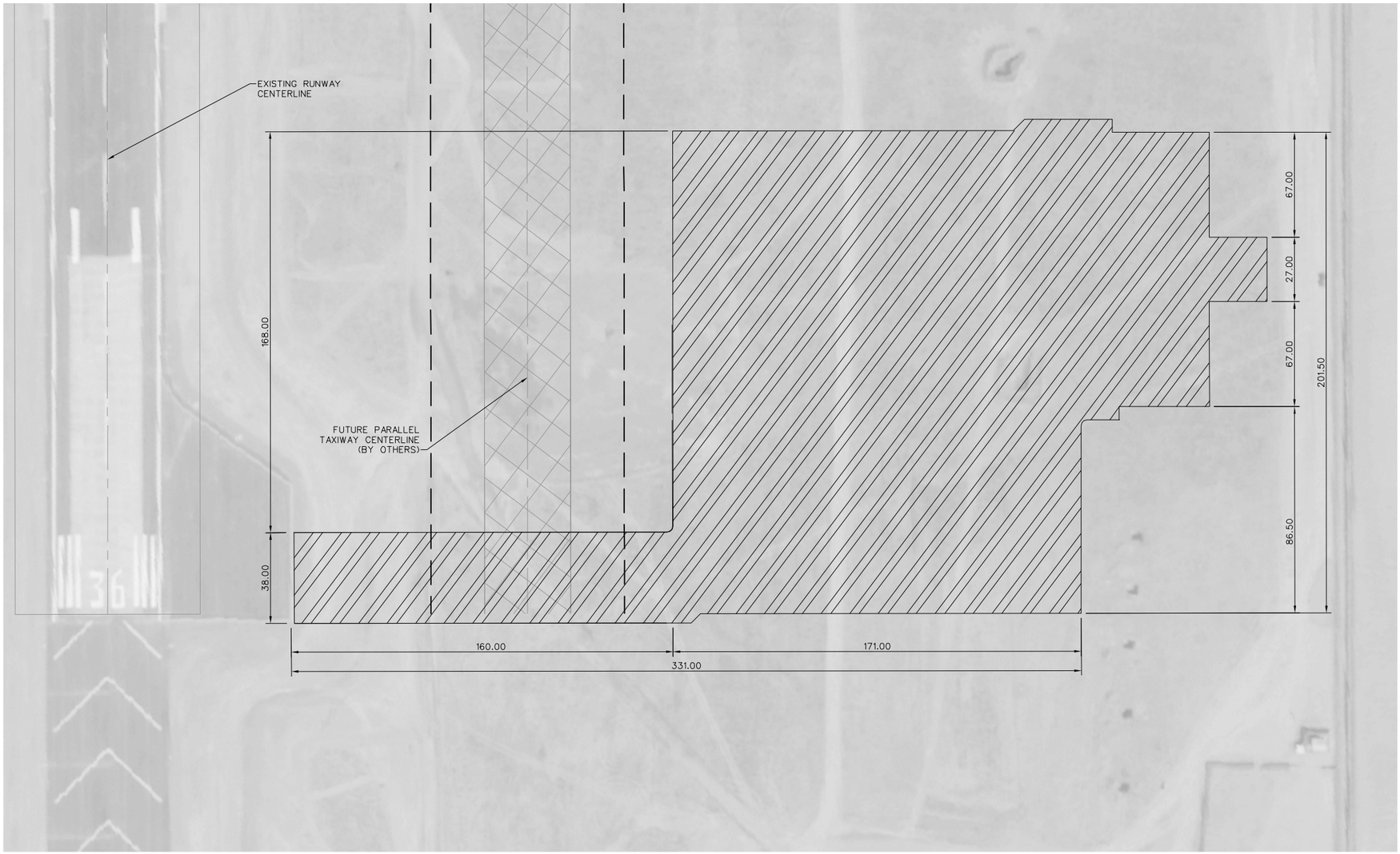

N

NOTES:

1. PLAN IS CONCEPTUAL AND THE FINAL DESIGN IS TO BE PERFORMED BY THE DESIGN/BUILD CONTRACTOR TO COMPLY WITH THE RFP, SPECIFICATION 01 80 00.12 10 AND ALL APPLICABLE CODES
2. THIS DEMOLITION PLAN IS REPRESENTATIVE OF BID OPTION 1.
3. SITE LIMITS BASED ON INFORMATION PROVIDED BY GOVERNMENT OFFICIALS. LOCATIONS OF ALL EXISTING UTILITIES/OBSTRUCTIONS/SYSTEMS SHOWN HEREON ARE APPROXIMATE ONLY. ALL UTILITIES/OBSTRUCTIONS/SYSTEMS MAY NOT BE SHOWN. CONTRACTOR SHALL BE RESPONSIBLE FOR LOCATING AND PROTECTING ALL UTILITIES/OBSTRUCTIONS/SYSTEMS WHETHER SHOWN OR NOT SHOWN.
4. HATCHED AREA IS TO BE CLEARED FOR CONSTRUCTION OF PROPOSED IMPROVEMENTS. EXISTING FACILITIES WITHIN DEMOLITION AREA ARE CONSIDERED TEMPORARY STRUCTURES REQUIRING REMOVAL OR DEMOLITION BY THE CONTRACTOR. THE CONTRACTOR SHALL COORDINATE WITH THE CONTRACTING OFFICER FOR SPECIFIC REQUIREMENTS ASSOCIATED WITH THESE FACILITIES PRIOR TO INITIATING REMOVAL OR DEMOLITION ACTIVITIES.
5. CONTRACTOR SHALL ENSURE THAT ALL EXISTING CONCRETE AND ASPHALT PAVING, SLABS AND AGGREGATE BASE HAS BEEN SAWCUT AND REMOVED CONTIGUOUS TO SITE LIMITS.
6. CONSTRUCTION DEBRIS, INCLUDING BROKEN PAVEMENT, SHALL BE TRANSPORTED TO OFFSITE DISPOSAL AREA IN COORDINATION WITH CONTRACTING OFFICER.
7. CONTRACTOR TO ENSURE THAT TREES AND GRUB ARE CLEARED AS REQUIRED. COORDINATE LIMITS OF TREE REMOVAL, PRUNING, CLEARING AND GRUBBING WITH THE CONTRACTING OFFICER.
8. CONTRACTOR SHALL ENSURE THAT ALL EXISTING DRAIN PIPE AND MANHOLES LOCATED WITHIN SITE LIMITS THAT ARE PROPOSED TO BE ABANDONED HAVE BEEN BACKFILLED WITH COMPACTED BACKFILL PER SPECIFICATIONS.
9. CONTRACTOR IS TO PROTECT ALL UTILITIES TO REMAIN AND MAINTAIN UTILITY SERVICE THROUGHOUT CONSTRUCTION.

LEGEND

LIMITS OF FUTURE PROJECT BY OTHERS

DEMOLITION AREA

50 25 0 25 50
1:1000

UNLESS OTHERWISE NOTED, ALL LINEAR DIMENSIONS SHOWN ARE IN METERS.

FINAL CORRECTED DESIGN UPDATE 3

SYMB	DESCRIPTION	DATE	
3	FINAL CORRECTED DESIGN UPDATE 3	11/16/11	GCH
2	FINAL CORRECTED DESIGN UPDATE 2	11/10/11	GCH
1	FINAL CORRECTED DESIGN UPDATE 1	10/31/11	GCH
0	FINAL CORRECTED DESIGN SUBMITTAL	10/06/11	GCH
A	FINAL DESIGN SUBMITTAL	09/21/11	GCH
			APR

DESIGNED BY: SPD
DATE: 11-16-11
DRAWN BY: SCJ
SUBMITTED BY: TETRA TECH
CHECKED BY: GCH
FILE NO.: AF1139--CD102PN

TETRA TECH

US Army Corps of Engineers
Middle East District

SOF HELICOPTER APRON
FOB HERAT
HERAT PROVINCE, AFGHANISTAN
SITE DESIGN
DEMOLITION PLAN
OPTION 1

SHEET REFERENCE NUMBER:
-
C-102

NOT FOR CONSTRUCTION

W:\23308\127-23308-11010\CAD\MED_Drawings\Site Design\Civil\AF1139--CD102PN.dwg 11/15/2011 5:47:34 PM Barrett, Patrick

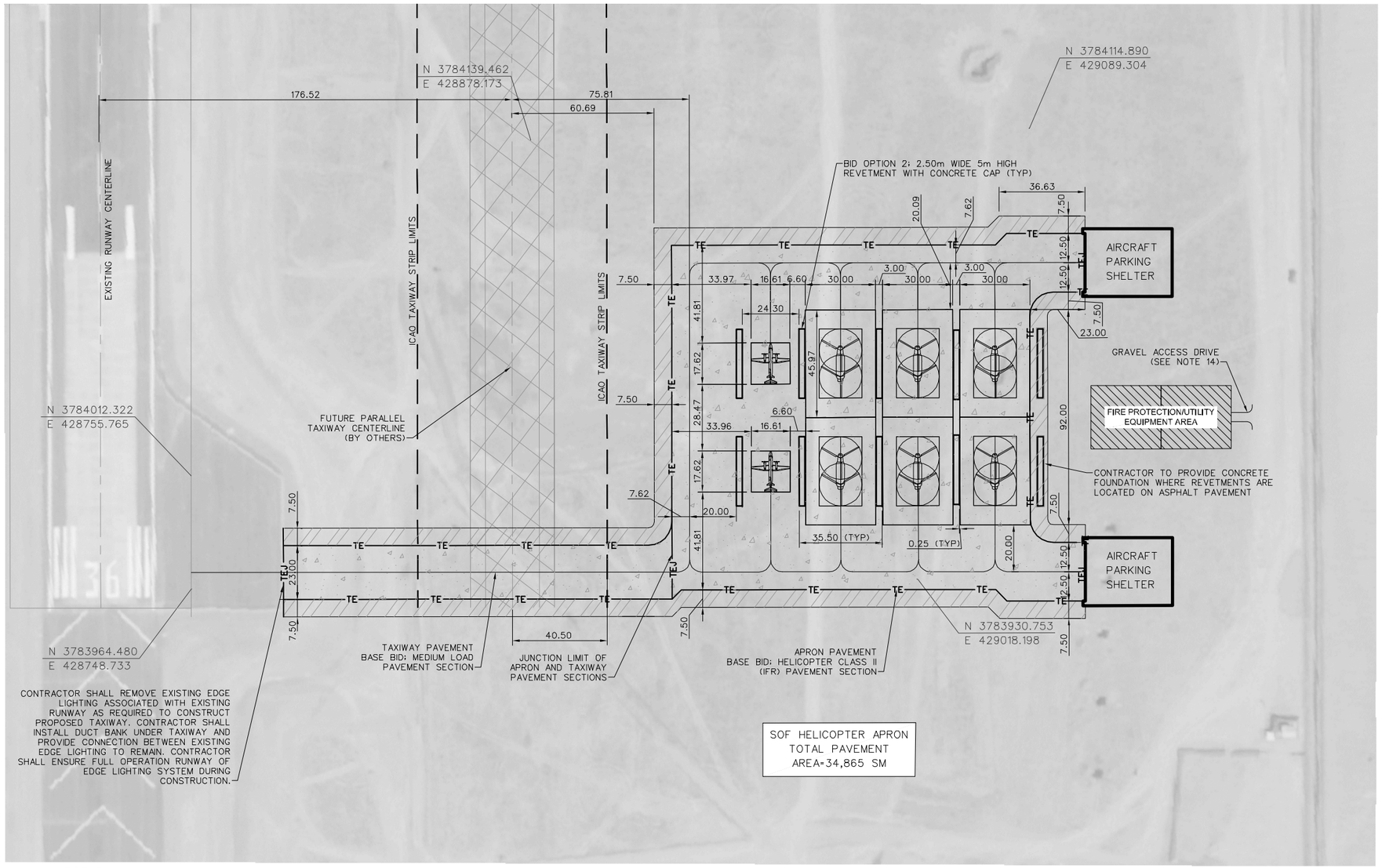

LEGEND

- LIMITS OF FUTURE PROJECT BY OTHERS
- ASPHALT PAVEMENT (SEE DETAIL ON C-501)
- CONCRETE PAVEMENT (SEE DETAIL ON C-501)
- TEJ — THICKENED EDGE EXPANSION JOINT (SEE DETAIL ON C-502)
- TE — THICKENED EDGE JOINT (SEE DETAIL ON C-502)

NOTES:

1. PLAN IS CONCEPTUAL AND THE FINAL DESIGN IS TO BE PERFORMED BY THE DESIGN/BUILD CONTRACTOR TO COMPLY WITH THE RFP, SPECIFICATION 01 80 00.12 10 AND ALL APPLICABLE CODES.
2. DOWELS SHALL BE USED AT ALL CONSTRUCTION JOINT LOCATIONS.
3. ALL ODD SHAPED SLABS ARE TO BE REINFORCED PER UFC 3-260-02.
4. A THICKENED EDGE EXPANSION JOINT SHALL BE PROVIDED AT ALL LOCATIONS WHERE CONCRETE PAVEMENT IS ADJACENT TO EXISTING CONCRETE PAVEMENT AND AT THE THRESHOLD OF ALL SHELTERS. A THICKENED EDGE JOINT SHALL BE PROVIDED AT ALL LOCATIONS WHERE CONCRETE PAVEMENT IS ADJACENT TO ASPHALT PAVEMENT, AN UNPAVED SURFACE AND AT CONNECTION OF APRONS AND TAXIWAYS. SEE DETAIL ON SHEET C-502.
5. MOORING POINTS AND STATIC GROUND POINTS ARE REQUIRED AT EACH AIRCRAFT PARKING POSITION. SEE SECTION 01 80 00.12 10 FOR REQUIREMENTS.
6. CONTRACTOR SHALL BE RESPONSIBLE FOR DESIGNING AND PROVIDING ALL SITE GRADING AND CLEARING REQUIRED TO CONSTRUCT THIS FACILITY.
7. CONTRACTOR SHALL REMOVE ALL TREES AND OBSTACLES WITHIN THE APRON FIXED AND MOVEABLE OBJECTS CLEARANCE LIMITS. SEE UFC 3-260-01, AIRFIELD AND HELIPORT PLANNING AND DESIGN, FOR REQUIREMENTS.
8. LOCATION OF PARALLEL TAXIWAY CENTERLINE IN RELATION TO RUNWAY CENTERLINE IS IN ACCORDANCE WITH THE INTERNATIONAL CIVIL AVIATION ORGANIZATION (ICAO) AERODROME DESIGN MANUAL
9. LOCATION OF PARKING APRON IN RELATION TO RUNWAY AND PARALLEL TAXIWAY IS TO BE IN ACCORDANCE WITH THE INTERNATIONAL CIVIL AVIATION ORGANIZATIOIN (ICAO) AERODROME DESIGN MANUAL AND WITH UFC 3-260-01 WHICHEVER IS MORE RESTRICTIVE.
10. CONTRACTOR SHALL INSTALL REINFORCED CONCRETE PIPE CULVERT UNDER PROPOSED TAXIWAY AS REQUIRED TO PROVIDE DRAINAGE PER SPECIFICATION 018000.12.10
11. ALE-AIRFIELD LIGHTING ENCLOSURE SHALL BE LOCATED WITHIN THE "FIRE PROTECTION/UTILITY EQUIPMENT AREA" IN ACCORDANCE WITH SECTION 01 80 00.12 10, 9.6.2.2
12. THE DIESEL ENGINE GENERATORS AND RELATED FUEL STORAGE SHALL BE LOCATED WITHIN THE "FIRE PROTECTION/UTILITY EQUIPMENT AREA."
13. AIRCRAFT PARKING SHELTER CONCRETE SLAB SECTION SHALL BE EQUAL TO THE APRON PAVEMENT SECTION
14. MINIMUM SECTION FOR GRAVEL ACCESS DRIVE SHALL BE 100 AGGREGATE SURFACE COURSE PER SPECIFICATION 32 15 00, 150mm GRADED/CRUSHED AGGREGATE BASE COURSE PER SPECIFICATION 32 11 23, AND SUB-GRADE SHALL BE UNDISTURBED NATIVE MATERIAL OR MINIMUM 150mm OF COMPACTED (95%) SUBGRADE CONSISTING OF SUITABLE SATISFACTORY ONSITE MATERIAL WHERE FILL IS REQUIRED PER SPECIFICATION 31 00 00.

50 25 0 25 50
1:1000

UNLESS OTHERWISE NOTED, ALL LINEAR DIMENSIONS SHOWN ARE IN METERS.

FINAL CORRECTED DESIGN UPDATE 3

SYMB	DESCRIPTION	DATE	
3	FINAL CORRECTED DESIGN UPDATE 3	11/16/11	GCH
2	FINAL CORRECTED DESIGN UPDATE 2	11/10/11	GCH
1	FINAL CORRECTED DESIGN UPDATE 1	10/31/11	GCH
0	FINAL CORRECTED DESIGN SUBMITTAL	10/06/11	GCH
A	FINAL DESIGN SUBMITTAL	09/21/11	GCH
			APR

DESIGNED BY: SPD
DATE: 11-16-11
DRAWN BY: SCJ
SUBMITTED BY: TETRA TECH
CHECKED BY: GCH
FILE NO.: AF1139--CS110PN

TETRA TECH

US Army Corps of Engineers
Middle East District

SOF HELICOPTER APRON
FOB HERAT
HERAT PROVINCE, AFGHANISTAN
SITE DESIGN
SITE PLAN
BASE BID

SHEET REFERENCE NUMBER:
-
C-110

NOT FOR CONSTRUCTION

W:\23308\127-23308-11010\CAD\MED_Drawings\Site Design\Civil\AF1139--CS110PN.dwg 11/15/2011 5:47:59 PM Barrett, Patrick

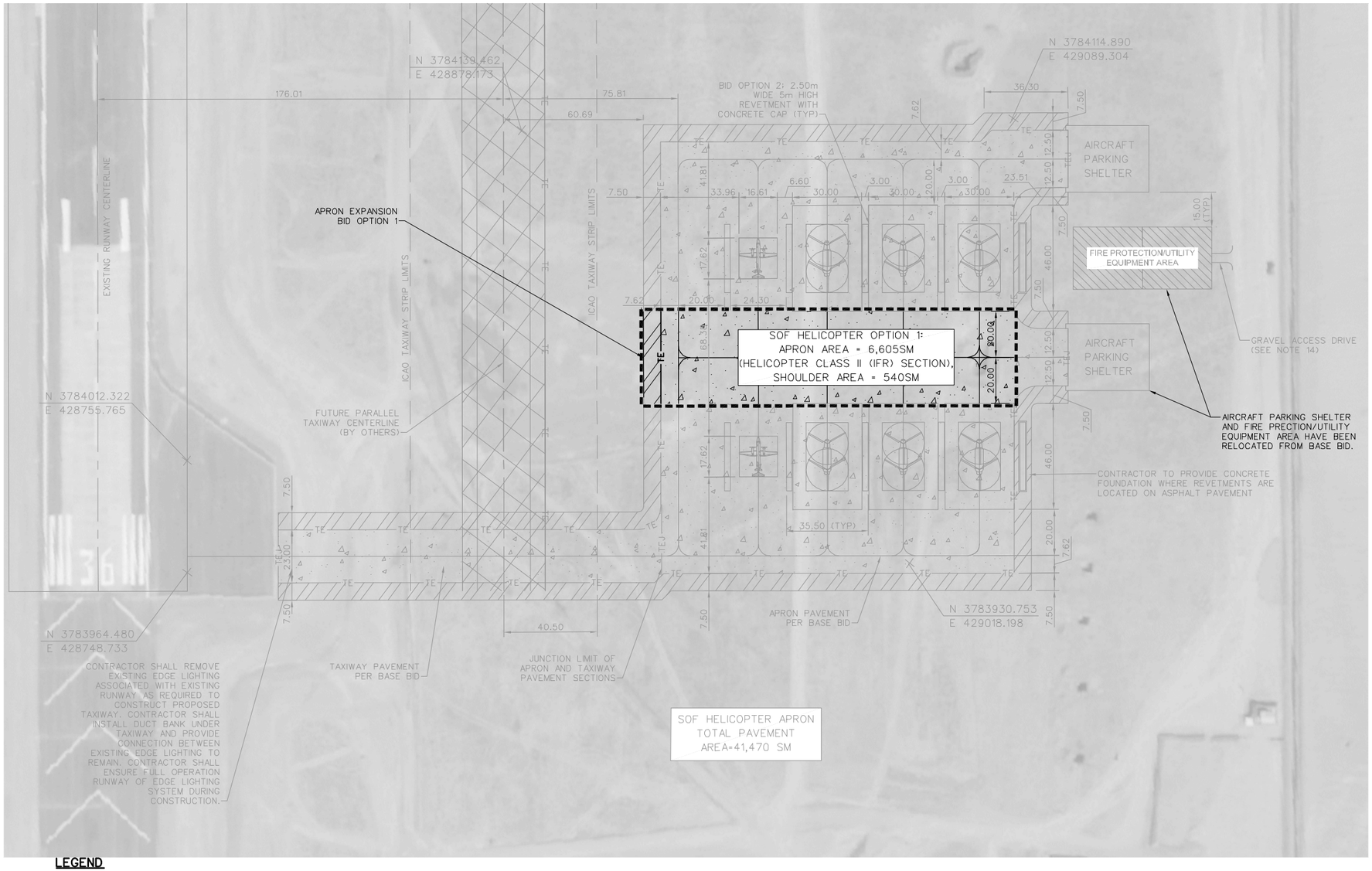

LEGEND

- LIMITS OF FUTURE PROJECT BY OTHERS
- ASPHALT PAVEMENT (SEE DETAIL ON C-501)
- CONCRETE PAVEMENT (SEE DETAIL ON C-501)
- TEJ — THICKENED EDGE EXPANSION JOINT (SEE DETAIL ON C-502)
- TE — THICKENED EDGE JOINT (SEE DETAIL ON C-502)
- LIMITS OF BID OPTION 1 APRON EXPANSION

NOTES:

1. PLAN IS CONCEPTUAL AND THE FINAL DESIGN IS TO BE PERFORMED BY THE DESIGN/BUILD CONTRACTOR TO COMPLY WITH THE RFP, SPECIFICATION 01 80 00.12 10 AND ALL APPLICABLE CODES.
2. DOWELS SHALL BE USED AT ALL CONSTRUCTION JOINT LOCATIONS.
3. ALL ODD SHAPED SLABS ARE TO BE REINFORCED PER UFC 3-260-02.
4. A THICKENED EDGE EXPANSION JOINT SHALL BE PROVIDED AT ALL LOCATIONS WHERE CONCRETE PAVEMENT IS ADJACENT TO EXISTING CONCRETE PAVEMENT AND AT THE THRESHOLD OF ALL SHELTERS. A THICKENED EDGE JOINT SHALL BE PROVIDED AT ALL LOCATIONS WHERE CONCRETE PAVEMENT IS ADJACENT TO ASPHALT PAVEMENT, AN UNPAVED SURFACE AND AT CONNECTION OF APRONS AND TAXIWAYS. SEE DETAIL ON SHEET C-502.
5. MOORING POINTS AND STATIC GROUND POINTS ARE REQUIRED AT EACH AIRCRAFT PARKING POSITION. SEE SECTION 01 80 00.12 10 FOR REQUIREMENTS.
6. CONTRACTOR SHALL BE RESPONSIBLE FOR DESIGNING AND PROVIDING ALL SITE GRADING AND CLEARING REQUIRED TO CONSTRUCT THIS FACILITY.
7. CONTRACTOR SHALL REMOVE ALL TREES AND OBSTACLES WITHIN THE APRON FIXED AND MOVEABLE OBJECTS CLEARANCE LIMITS. SEE UFC 3-260-01, AIRFIELD AND HELIPORT PLANNING AND DESIGN, FOR REQUIREMENTS.
8. LOCATION OF PARALLEL TAXIWAY CENTERLINE IN RELATION TO RUNWAY CENTERLINE IS IN ACCORDANCE WITH THE INTERNATIONAL CIVIL AVIATION ORGANIZATION (ICAO) AERODROME DESIGN MANUAL
9. LOCATION OF PARKING APRON IN RELATION TO RUNWAY AND PARALLEL TAXIWAY IS TO BE IN ACCORDANCE WITH THE INTERNATIONAL CIVIL AVIATION ORGANIZATIOIN (ICAO) AERODROME DESIGN MANUAL AND WITH UFC 3-260-01 WHICHEVER IS MORE RESTRICTIVE.
10. CONTRACTOR SHALL INSTALL REINFORCED CONCRETE PIPE CULVERT UNDER PROPOSED TAXIWAY AS REQUIRED TO PROVIDE DRAINAGE PER SPECIFICATION 01 80 00.12 10.
11. ALE-AIRFIELD LIGHTING ENCLOSURE SHALL BE LOCATED WITHIN THE "FIRE PROTECTION/UTILITY EQUIPMENT AREA" IN ACCORDANCE WITH SECTION 01 80 00.12 10, 9.6.2.2
12. THE DIESEL ENGINE GENERATORS AND RELATED FUEL STORAGE SHALL BE LOCATED WITHIN THE "FIRE PROTECTION/UTILITY EQUIPMENT AREA."
13. AIRCRAFT PARKING SHELTER CONCRETE SLAB SECTION SHALL BE EQUAL TO THE APRON PAVEMENT SECTION
14. MINIMUM SECTION FOR GRAVEL ACCESS DRIVE SHALL BE 100 AGGREGATE SURFACE COURSE PER SPECIFICATION 32 15 00, 150mm GRADED/CRUSHED AGGREGATE BASE COURSE PER SPECIFICATION 32 11 23, AND SUB-GRADE SHALL BE UNDISTURBED NATIVE MATERIAL OR MINIMUM 150mm OF COMPACTED (95%) SUBGRADE CONSISTING OF SUITABLE SATISFACTORY ONSITE MATERIAL WHERE FILL IS REQUIRED PER SPECIFICATION 31 00 00.

50 25 0 25 50
1:1000

UNLESS OTHERWISE NOTED, ALL LINEAR DIMENSIONS SHOWN ARE IN METERS.

FINAL CORRECTED DESIGN UPDATE 3

SYMB	DESCRIPTION	DATE	APR
3	FINAL CORRECTED DESIGN UPDATE 3	11/16/11	GCH
2	FINAL CORRECTED DESIGN UPDATE 2	11/10/11	GCH
1	FINAL CORRECTED DESIGN UPDATE 1	10/31/11	GCH

DESIGNED BY: SPD
DATE: 11-16-11
DRAWN BY: SCJ
SUBMITTED BY: TETRA TECH
CHECKED BY: GCH
FILE NO.: AF1139--CS111PN

TETRA TECH

US Army Corps of Engineers
Middle East District

SOF HELICOPTER APRON
FOB HERAT
HERAT PROVINCE, AFGHANISTAN
SITE DESIGN
SITE PLAN
OPTION 1

SHEET REFERENCE NUMBER:
-
C-111

NOT FOR CONSTRUCTION

W:\23308\127-23308-11010\CAD\MED_Drawings\Site Design\Civil\AF1139--CS111PN.dwg 11/15/2011 5:48:32 PM Barrett, Patrick

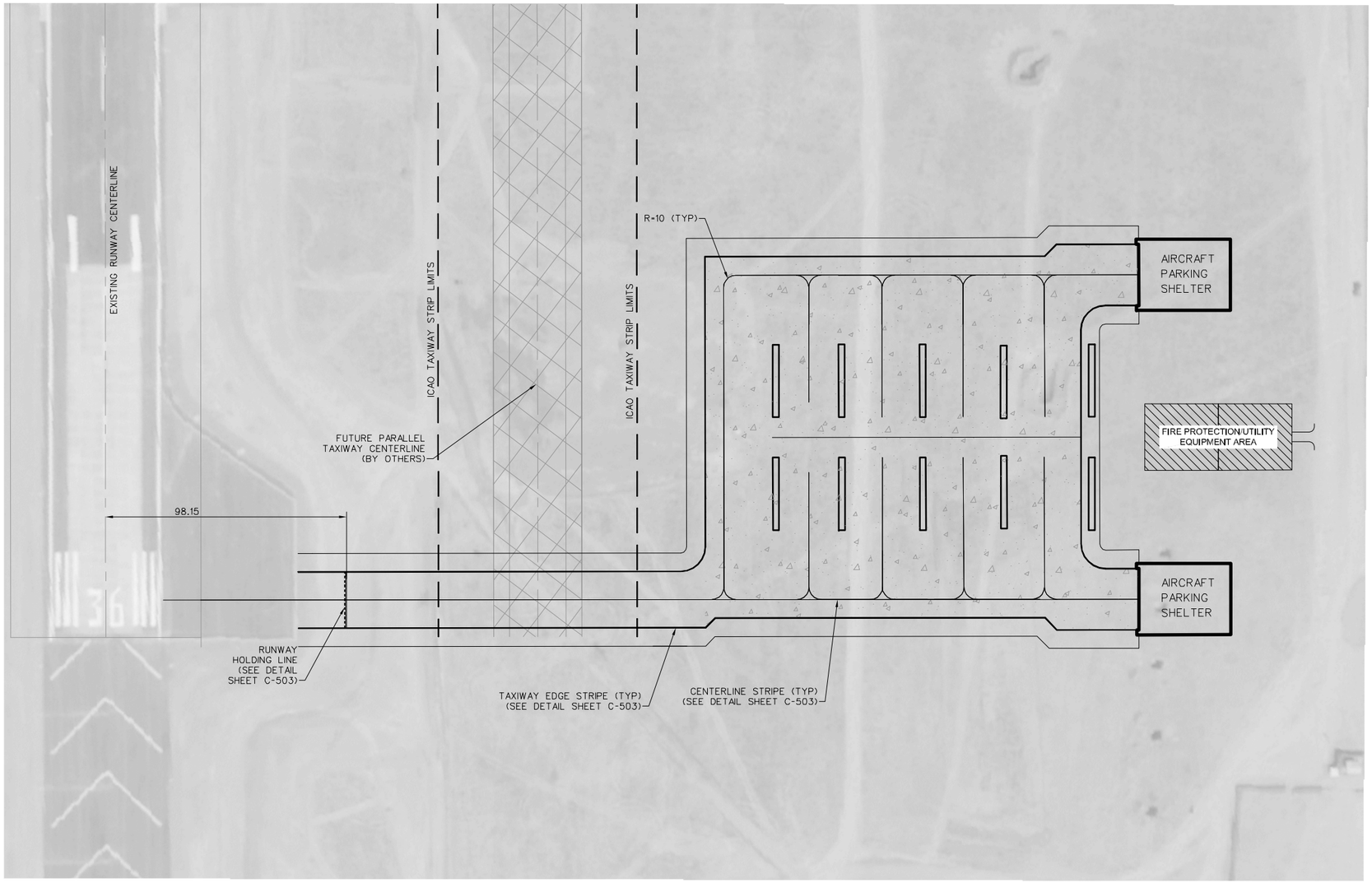

NOTE:

1. PLAN IS CONCEPTUAL AND THE FINAL DESIGN IS TO BE PERFORMED BY THE DESIGN/BUILD CONTRACTOR TO COMPLY WITH THE RFP, SPECIFICATION 01 80 00.12 10 AND ALL APPLICABLE CODES.
2. THIS PAVEMENT MARKING PLAN IS REPRESENTATIVE OF THE BASE BID.
3. CONTRACTOR SHALL LOCATE THE RUNWAY HOLDING LINE MARKING AND INSTRUMENT HOLD LINE MARKING BASED ON COORDINATION WITH BASE OPERATIONS AND CONTRACTING OFFICER.

LEGEND

LIMITS OF FUTURE PROJECT BY OTHERS

50 25 0 25 50
1:1000

UNLESS OTHERWISE NOTED, ALL LINEAR DIMENSIONS SHOWN ARE IN METERS.

FINAL CORRECTED DESIGN UPDATE 3

SYMB	DESCRIPTION	DATE	APR
3	FINAL CORRECTED DESIGN UPDATE 3	11/16/11	GCH
2	FINAL CORRECTED DESIGN UPDATE 2	11/10/11	GCH
1	FINAL CORRECTED DESIGN UPDATE 1	10/31/11	GCH
0	FINAL CORRECTED DESIGN SUBMITTAL	10/06/11	GCH
A	FINAL DESIGN SUBMITTAL	09/21/11	GCH

DESIGNED BY: SPD
DATE: 11-16-11
DRAWN BY: SCJ
SUBMITTED BY: TETRA TECH
CHECKED BY: GCH
FILE NO.: AF1139--CS115PN

TETRA TECH

US Army Corps of Engineers
Middle East District

SOF HELICOPTER APRON
FOB HERAT
HERAT PROVINCE, AFGHANISTAN
SITE DESIGN
PAVEMENT MARKING PLAN
BASE BID

SHEET REFERENCE NUMBER:
–
C-115

NOT FOR CONSTRUCTION

W:\23308\127-23308-11010\CAD\MED_Drawings\Site Design\Civil\AF1139--CS115PN.dwg 11/15/2011 5:48:59 PM Barrett, Patrick

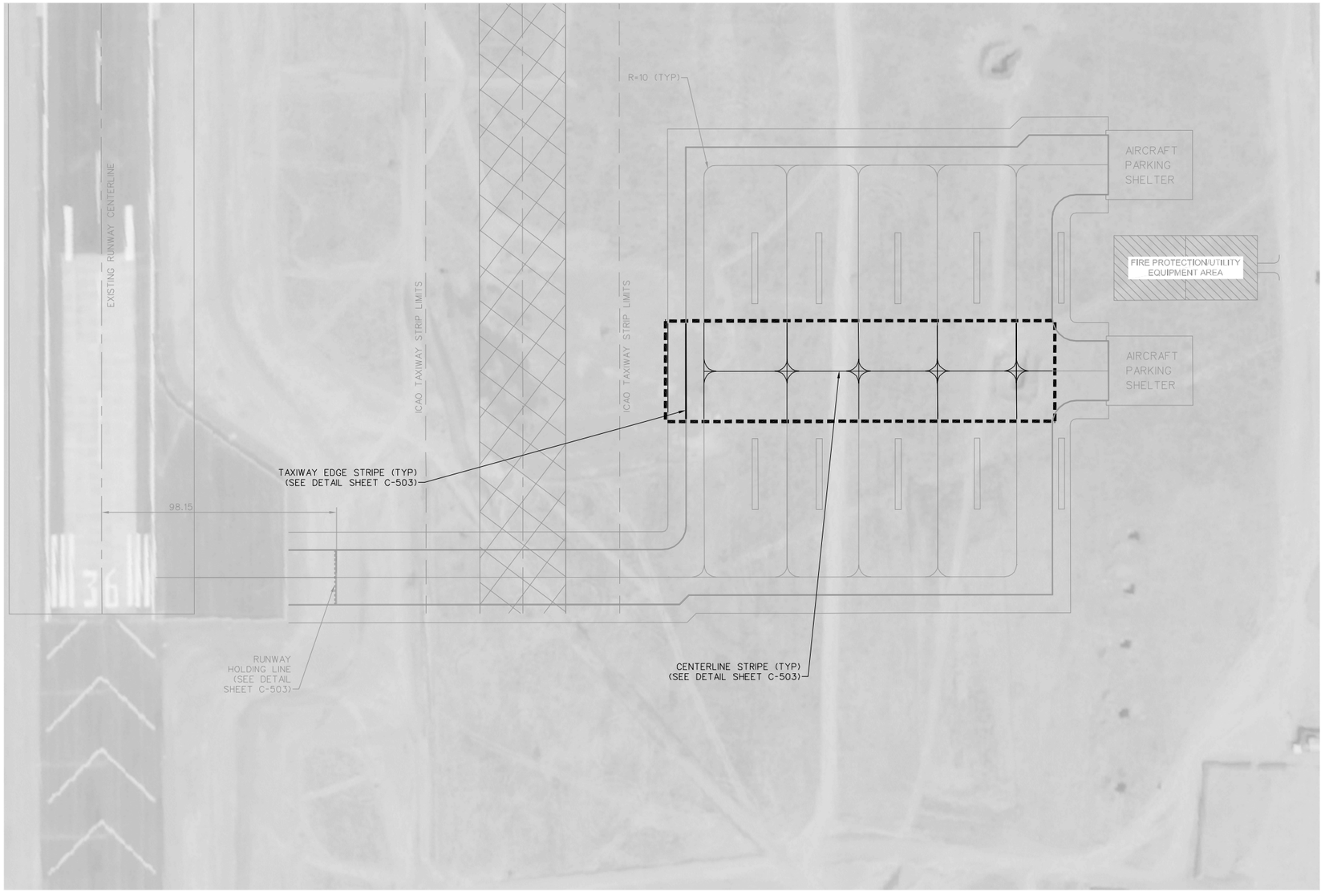

NOTE:

1. PLAN IS CONCEPTUAL AND THE FINAL DESIGN IS TO BE PERFORMED BY THE DESIGN/BUILD CONTRACTOR TO COMPLY WITH THE RFP, SPECIFICATION 01 80 00.12 10 AND ALL APPLICABLE CODES.
2. THIS PAVEMENT MARKING PLAN IS REPRESENTATIVE OF BID OPTION 1.
3. CONTRACTOR SHALL LOCATE THE RUNWAY HOLDING LINE MARKING AND INSTRUMENT HOLD LINE MARKING BASED ON COORDINATION WITH BASE OPERATIONS AND CONTRACTING OFFICER.

LEGEND

LIMITS OF FUTURE PROJECT BY OTHERS

LIMITS OF BID OPTION 1 APRON EXPANSION

50 25 0 25 50
1:1000

UNLESS OTHERWISE NOTED, ALL LINEAR DIMENSIONS SHOWN ARE IN METERS.

FINAL CORRECTED DESIGN UPDATE 3

SYMB	DESCRIPTION	DATE	APR
3	FINAL CORRECTED DESIGN UPDATE 3	11/16/11	GCH
2	FINAL CORRECTED DESIGN UPDATE 2	11/10/11	GCH
1	FINAL CORRECTED DESIGN UPDATE 1	10/31/11	GCH
0	FINAL CORRECTED DESIGN SUBMITTAL	10/06/11	GCH
A	FINAL DESIGN SUBMITTAL	09/21/11	GCH

DESIGNED BY: SPD
DATE: 11-16-11
DRAWN BY: SCJ
SUBMITTED BY: TETRA TECH
CHECKED BY: GCH
FILE NO.: AF1139--CS116PN

TETRA TECH

US Army Corps of Engineers
Middle East District

SOF HELICOPTER APRON
FOB HERAT
HERAT PROVINCE, AFGHANISTAN
SITE DESIGN
PAVEMENT MARKING PLAN
OPTION 1

SHEET REFERENCE NUMBER:
-
C-116

NOT FOR CONSTRUCTION

W:\23308\127-23308-11010\CAD\MED_Drawings\Site Design\Civil\AF1139--CS116PN.dwg 11/15/2011 5:49:24 PM Barrett, Patrick

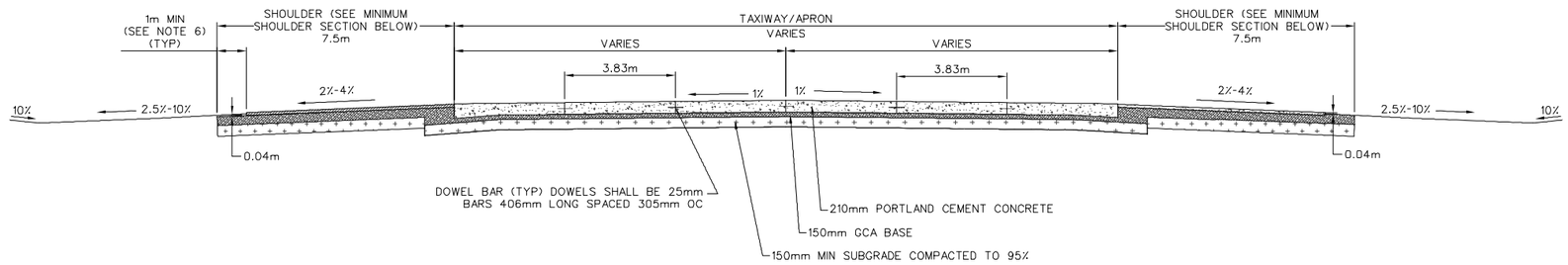

MINIMUM HELICOPTER CLASS II (IFR) PAVEMENT SECTION

SCALE NTS

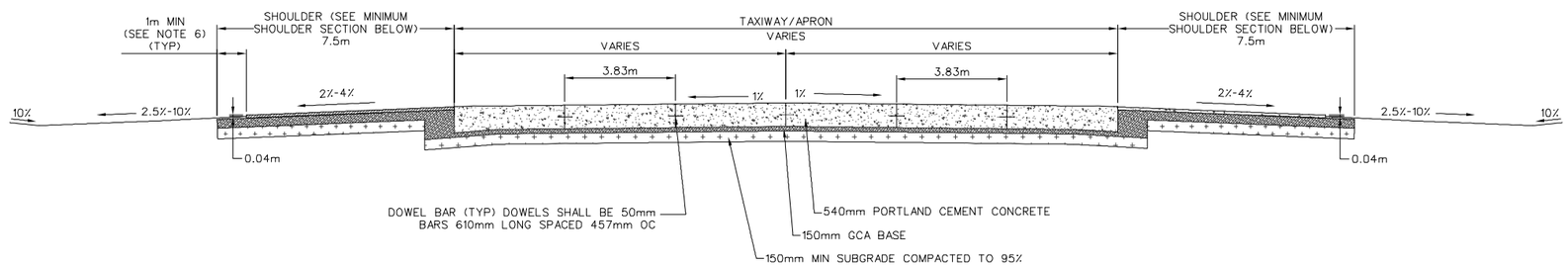

MINIMUM AIR FORCE MEDIUM LOAD PAVEMENT SECTION

SCALE: NTS

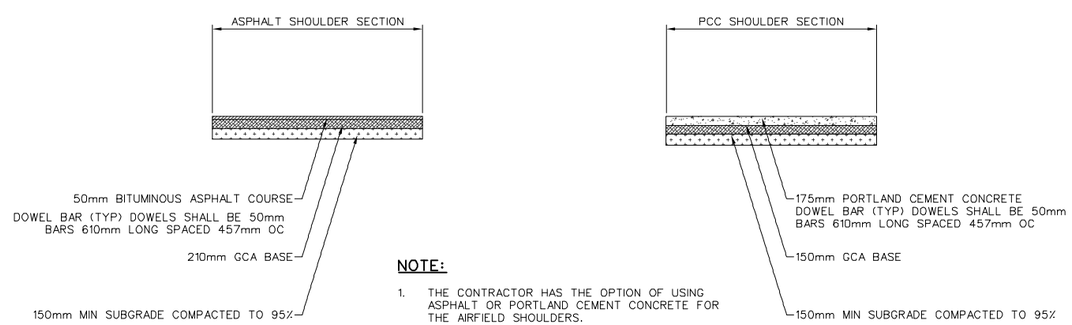

NOTE:

1. THE CONTRACTOR HAS THE OPTION OF USING ASPHALT OR PORTLAND CEMENT CONCRETE FOR THE AIRFIELD SHOULDERS.

MINIMUM SHOULDER SECTION

SCALE NTS

NOTES:

1. ALL DIMENSIONS AND GRADES PER UFC 3-260-01.
2. CONTRACTOR TO VERIFY PAVEMENT SECTION BASED ON THE ON-SITE GEOTECHNICAL INVESTIGATION.
3. GCAB IS TO HAVE A MINIMUM CBR VALUE OF 100.
4. PAVEMENT SECTION BASED ON AIRFIELD DESIGN TYPE. TRAFFIC AREA B.
5. CONTRACTOR TO DETERMINE SUBGRADE COMPACTION REQUIREMENTS PER UFC 3-260-02 CHAPTER 6
6. CONTRACTOR SHALL EXTEND BASE COURSE 1.00m BEYOND PAVEMENT LIMITS

UNLESS OTHERWISE NOTED, ALL LINEAR DIMENSIONS SHOWN ARE IN MILLIMETERS.

FINAL CORRECTED DESIGN UPDATE 3

SYMB	DESCRIPTION	DATE	APR
3	FINAL CORRECTED DESIGN UPDATE 3	11/16/11	GCH
2	FINAL CORRECTED DESIGN UPDATE 2	11/10/11	GCH
1	FINAL CORRECTED DESIGN UPDATE 1	10/31/11	GCH
0	FINAL CORRECTED DESIGN SUBMITTAL	10/06/11	GCH
B	FINAL DESIGN SUBMITTAL	09/21/11	GCH
A	50% DESIGN SUBMITTAL	08/24/11	GCH

DESIGNED BY: SPD
DATE: 11-16-11
DRAWN BY: SCJ
SUBMITTED BY: TETRA TECH
CHECKED BY: GCH
FILE NO.: AF1139--C501DT

TETRA TECH

US Army Corps of Engineers
Middle East District

SOF HELICOPTER APRON
FOB HERAT
HERAT PROVINCE, AFGHANISTAN
SITE DESIGN
TYPICAL APRON
PAVEMENT SECTION

SHEET REFERENCE NUMBER:
-
C-501

NOT FOR CONSTRUCTION

W:\23308\127-23308-11010\CAD\MED_Drawings\Site Design\Civil\AF1139--C501DT.dwg 11/15/2011 5:49:50 PM Barrett, Patrick

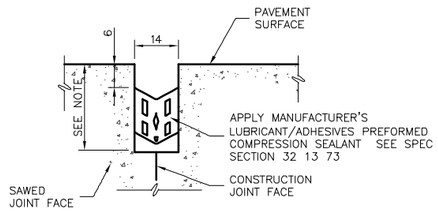

NOTE:

DEPTH AS RECOMMENDED BY MANUFACTURER PER TYPE OF SEAL BEING USED (DEPTH NOT LESS THAN 38mm.)

DETAIL 1 - CONSTRUCTION JOINT DETAIL
NTS

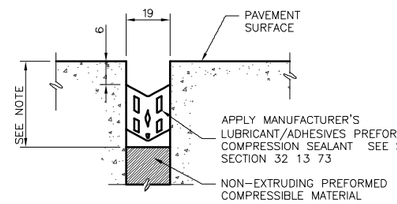

DETAIL 2 - EXPANSION JOINT DETAIL
NTS

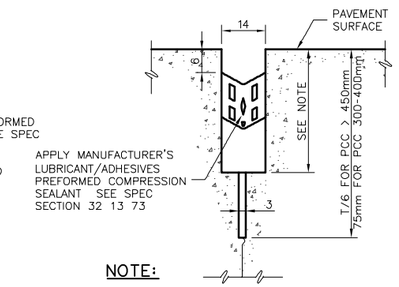

NOTE:

DEPTH AS RECOMMENDED BY MANUFACTURER PER TYPE OF SEAL BEING USED (DEPTH NOT LESS THAN 38mm.)

DETAIL 3 - CONTRACTION JOINT DETAIL
NTS

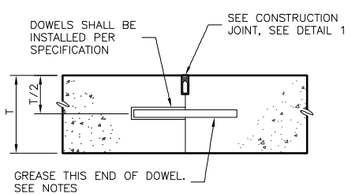

TRANSVERSE DOWELED CONSTRUCTION JOINT DETAIL
NTS

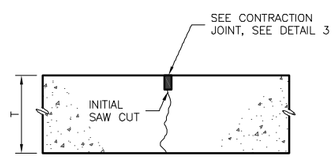

TRANSVERSE CONTRACTION JOINT DETAIL
NTS

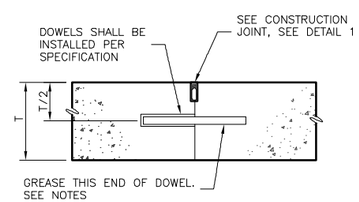

LONGITUDINAL DOWELED CONSTRUCTION JOINT DETAIL
NTS

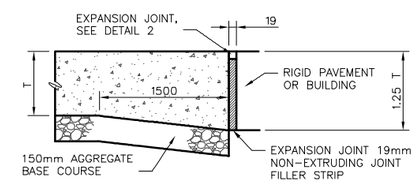

THICKENED EDGE EXPANSION JOINT DETAIL (TEJ)
NTS

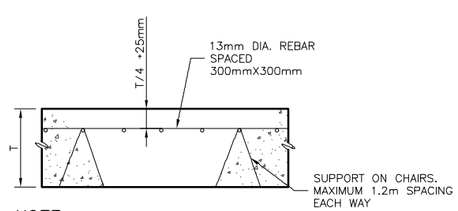

NOTE:

REINFORCING IS REQUIRED ONLY FOR ODD SHAPED SLABS AND SMALL SLABS WHERE CRACKS OR BREAKS ARE MORE LIKELY. PLAIN JOINTED CONCRETE SHALL BE USED ELSEWHERE.

REINFORCED CONCRETE SLAB DETAIL
NTS

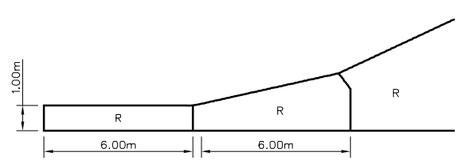

CONCRETE FILLET DETAIL
NTS

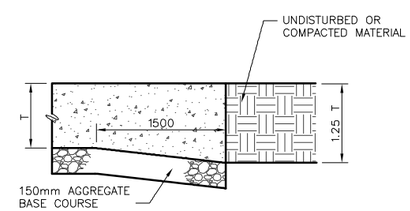

THICKENED EDGE DETAIL (TE)
NTS

NOTES:

1. DOWEL SIZES AND SPACING SHALL BE AS NOTED ON C-501

UNLESS OTHERWISE NOTED, ALL LINEAR DIMENSIONS SHOWN ARE IN MILLIMETERS.

FINAL CORRECTED DESIGN UPDATE 3

SYMB	DESCRIPTION	DATE	APR
3	FINAL CORRECTED DESIGN UPDATE 3	11/16/11	GCH
2	FINAL CORRECTED DESIGN UPDATE 2	11/10/11	GCH
1	FINAL CORRECTED DESIGN UPDATE 1	10/31/11	GCH
0	FINAL CORRECTED DESIGN SUBMITTAL	10/06/11	GCH
B	FINAL DESIGN SUBMITTAL	09/21/11	GCH
A	50% DESIGN SUBMITTAL	08/24/11	GCH

DESIGNED BY: SPD DATE: 11-16-11
DRAWN BY: SCJ SUBMITTED BY: TETRA TECH
CHECKED BY: GCH FILE NO.: AF1139--C502DT

TETRA TECH

US Army Corps of Engineers Middle East District

SOF HELICOPTER APRON
FOB HERAT
HERAT PROVINCE, AFGHANISTAN
SITE DESIGN
CONCRETE JOINT DETAILS

SHEET REFERENCE NUMBER:
-
C-502

NOT FOR CONSTRUCTION

W:\23308\127-23308-11010\CAD\MED_Drawings\Site Design\Civil\AF1139--C502DT.dwg 11/15/2011 5:50:05 PM Barrett, Patrick

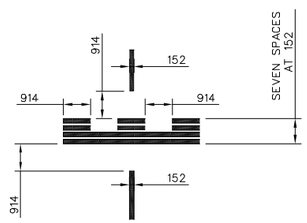

ALL MARKINGS ARE YELLOW, RETROREFLECTIVE
SEE SPECIFICATION 32 17 24.00 10

HOLDING LINE MARKING DETAIL
NTS

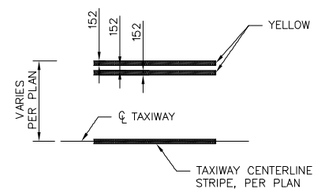

ALL MARKINGS ARE YELLOW, RETROREFLECTIVE
SEE SPECIFICATION 32 17 24.00 10

CONTINUOUS TAXIWAY EDGE STRIPE DETAIL
NTS

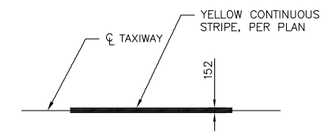

ALL MARKINGS ARE YELLOW, RETROREFLECTIVE

TAXIWAY CENTERLINE STRIPE DETAIL
NTS

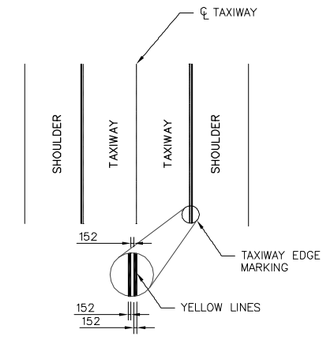

ALL MARKINGS ARE YELLOW RETROREFLECTIVE
SEE SPECIFICATION 32 17 24.00 10

TYPICAL TAXIWAY MARKING DETAIL
NTS

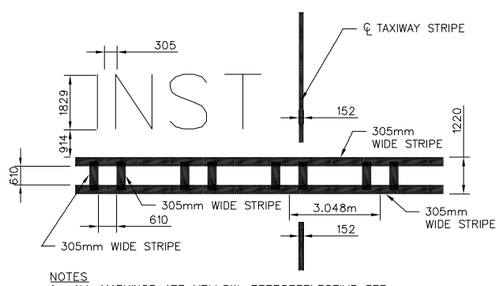

NOTES
1. ALL MARKINGS ARE YELLOW, RETROREFLECTIVE SEE SPECIFICATION 32 17 24.00 10
2. PROVIDE "INST" MARKING AT INTERVALS OF NOT MORE THAN 45m (150') WHERE WIDTH OF MARKING EXCEEDS 60m (200').
3. REFER TO ELT 04-02 FIGURE 9 AND FIGURE 10 FOR FURTHER DETAIL ON TAXIWAY MARKING REQUIREMENTS.

INSTRUMENT HOLDING LINE MARKING DETAIL
NTS

UNLESS OTHERWISE NOTED, ALL LINEAR DIMENSIONS SHOWN ARE IN MILLIMETERS.

FINAL CORRECTED DESIGN UPDATE 3

SYMB	DESCRIPTION	DATE	APR
3	FINAL CORRECTED DESIGN UPDATE 3	11/16/11	GCH
2	FINAL CORRECTED DESIGN UPDATE 2	11/10/11	GCH
1	FINAL CORRECTED DESIGN UPDATE 1	10/31/11	GCH
0	FINAL CORRECTED DESIGN SUBMITTAL	10/06/11	GCH
B	FINAL DESIGN SUBMITTAL	09/21/11	GCH
A	50% DESIGN SUBMITTAL	08/24/11	GCH

DESIGNED BY: SPD
DATE: 11-16-11
DRAWN BY: SCJ
SUBMITTED BY: TETRA TECH
CHECKED BY: GCH
FILE NO.: AF1139--C503DT

TETRA TECH

US Army Corps of Engineers
Middle East District

SOF HELICOPTER APRON
FOB HERAT
HERAT PROVINCE, AFGHANISTAN
SITE DESIGN
PAVEMENT MARKING DETAILS

SHEET REFERENCE NUMBER:
-
C-503

NOT FOR CONSTRUCTION

W:\23308\127-23308-11010\CAD\MED_Drawings\Site Design\Civil\AF1139--C503DT.dwg 11/15/2011 5:50:21 PM Barrett, Patrick

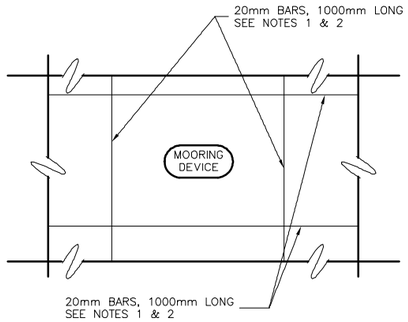

NOTES:

1. REINFORCEMENT BARS SHALL BE PLACED 75mm FROM AIRCRAFT MOORING DEVICE AND 75mm BELOW PAVEMENT SURFACE.
2. THE ENDS OF REINFORCING BARS SHOULD BE PLACED 75mm FROM PAVING JOINTS TO PROVIDE COVER.
3. THE CENTER OF THE AIRCRAFT MOORING DEVICE SHALL BE A MINIMUM OF 600mm FROM EITHER CONTRACTION AND/OR CONSTRUCTION JOINTS. THE DEVICE CAN BE RELOCATED AS REQUIRED TO MAINTAIN THE MINIMUM DISTANCE.

MOORING DEVICE SLAB DETAIL
NTS

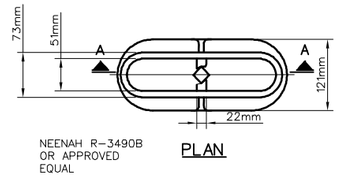

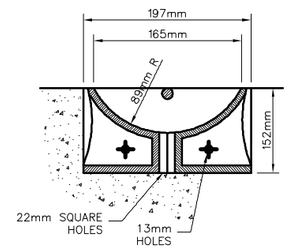

SECTION A-A

MOORING DEVICE DETAIL
NTS

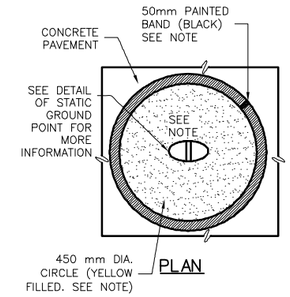

NOTE:

AT STATIC GROUNDING POINTS THE WORDS "STATIC GROUND CONNECTION" SHALL BE STENCILED IN BLACK ON THE YELLOW CIRCLE. SEE SPECIFICATION 32 17 24.00 10 FOR PAINT INFORMATION.

AIR FORCE STATIC GROUND
NTS

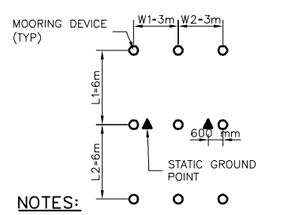

NOTES:

1. PREFERRED MOORING POINT SPACES FOR EACH AIRCRAFT POSITION IS L1 = L2 = W
2. MOORING POINT LAYOUT IN ACCORDANCE WITH UFC 3-260-01 FIGURE B11-3.
3. SEE FIGURE NOTES FOR APPROVED VARIATIONS FROM PREFERRED SPACING.

ROTARY WING ALLOWABLE MOORING POINT SPACING
NTS

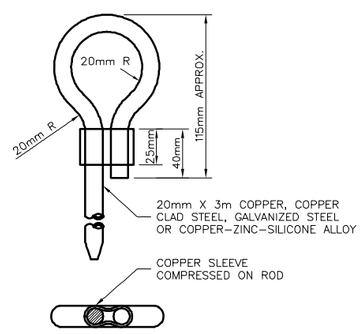

NOTE:

PROVIDE A SPECIAL DRIVER TO PROTECT THE SHEPPARD'S HOOK.

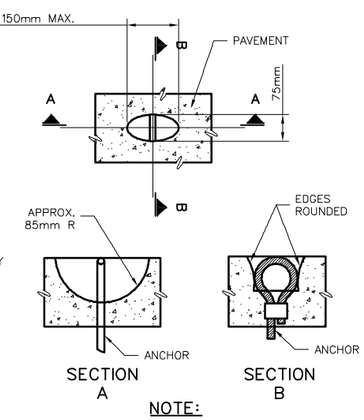

NOTE:

REFER TO AIR FORCE STATIC GROUND FOR MARKINGS.

DETAIL OF STATIC GROUND POINT
NTS

UNLESS OTHERWISE NOTED, ALL LINEAR DIMENSIONS SHOWN ARE IN METERS.

FINAL CORRECTED DESIGN UPDATE 3

SYMB	DESCRIPTION	DATE	APR
3	FINAL CORRECTED DESIGN UPDATE 3	11/16/11	GCH
2	FINAL CORRECTED DESIGN UPDATE 2	11/10/11	GCH
1	FINAL CORRECTED DESIGN UPDATE 1	10/31/11	GCH
0	FINAL CORRECTED DESIGN SUBMITTAL	10/06/11	GCH
B	FINAL DESIGN SUBMITTAL	09/21/11	GCH
A	50% DESIGN SUBMITTAL	08/24/11	GCH

DESIGNED BY: SPD
DATE: 11-16-11
DRAWN BY: SCJ
SUBMITTED BY: TETRA TECH
CHECKED BY: GCH
FILE NO.: AF1139--CI504DT

TETRA TECH

US Army Corps of Engineers
Middle East District

SOF HELICOPTER APRON
FOB HERAT
HERAT PROVINCE, AFGHANISTAN
SITE DESIGN
TIE DOWN DETAILS

SHEET REFERENCE NUMBER:
-
C-504

NOT FOR CONSTRUCTION

W:\23308\127-23308-11010\CAD\MED_Drawings\Site Design\Civil\AF1139--CI504DT.dwg 11/15/2011 5:50:36 PM Barrett, Patrick

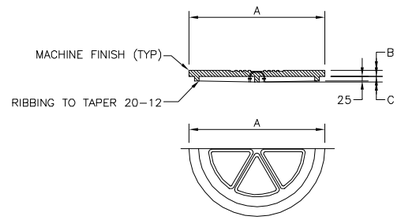

COVER

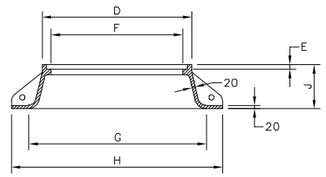

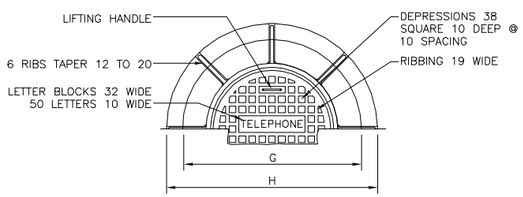

FRAME

	A	B	C	D	E	F	G	H	J
MANHOLE	810	51	82.5	813	51	762	1041	1245	254

NOTE:

CONTRACTOR TO INSTALL GSA/DISA APPROVED MANHOLE COVER UNDER TYPE B LID.

TYPE "B" MANHOLE FRAME AND COVER DETAILS

N.T.S.

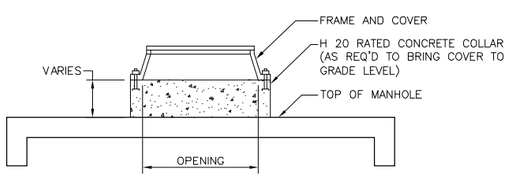

MANHOLE NECK DETAIL

N.T.S.

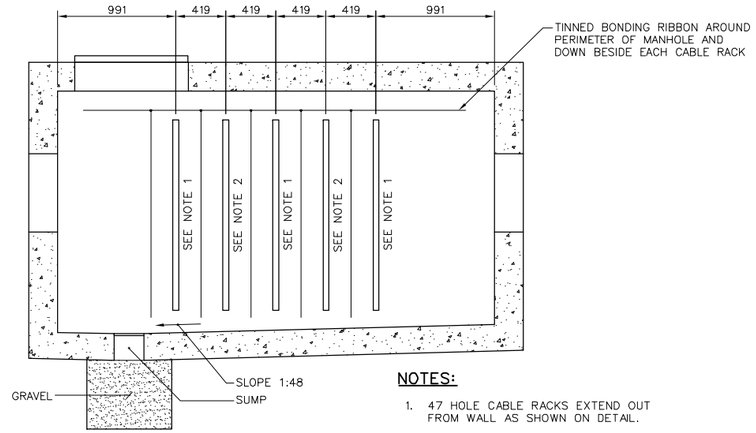

NOTES:

1. 47 HOLE CABLE RACKS EXTEND OUT FROM WALL AS SHOWN ON DETAIL.
2. 47 HOLE CABLE RACKS MOUNTED DIRECTLY TO WALL.
3. SIDE WINDOWS NOT SHOWN FOR CLARITY.

MANHOLE CABLE RACK INSTALLATION

SCALE 1:25

A TC-001 TC-001

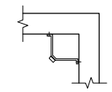

CORNER BRACE DETAIL

N.T.S.

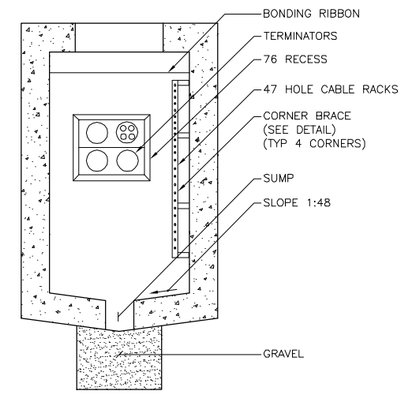

MANHOLE CABLE RACK INSTALLATION

SCALE 1:25

B TC-001 TC-001

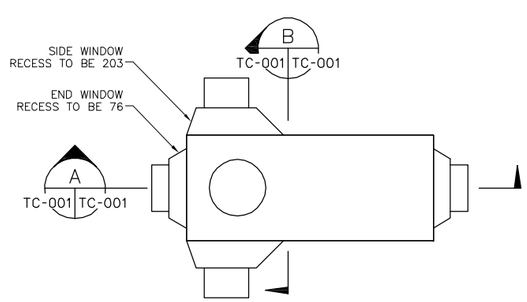

TYPICAL MANHOLE TYPE J

SCALE 1:50

1 0 1 2 3 4
1:50

1 .50 0 1 1.5
1:25

UNLESS OTHERWISE NOTED, ALL LINEAR DIMENSIONS SHOWN ARE IN MILLIMETERS.

FINAL CORRECTED DESIGN UPDATE 3

SYMB	DESCRIPTION	DATE	APR
3	FINAL CORRECTED DESIGN UPDATE 3	11/16/11	GCH
2	FINAL CORRECTED DESIGN UPDATE 2	11/10/11	GCH
1	FINAL CORRECTED DESIGN UPDATE 1	10/31/11	GCH
0	FINAL CORRECTED DESIGN SUBMITTAL	10/06/11	GCH
B	FINAL DESIGN SUBMITTAL	09/21/11	GCH
A	50% DESIGN SUBMITTAL	08/24/11	GCH

DESIGNED BY: SPD
DATE: 11-16-11
DRAWN BY: SPD
SUBMITTED BY: TETRA TECH
CHECKED BY: GCH
FILE NO.: AF1139--XT501DT

TETRA TECH

US Army Corps of Engineers Middle East District

SOF HELICOPTER APRON
FOB HERAT
HERAT PROVINCE, AFGHANISTAN
SITE DESIGN
COMMUNICATION DETAILS
SHEET 1 OF 4

SHEET REFERENCE NUMBER:
-
XT-501

NOT FOR CONSTRUCTION

W:\23308\127-23308-11010\CAD\MED_Drawings\Site Design\Telecommunications\AF1139--XT501DT.dwg 11/15/2011 5:54:16 PM Barrett, Patrick

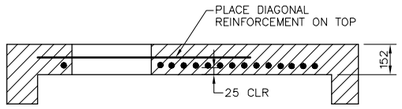

SECTION C
N.T.S.
TC-002 TC-002

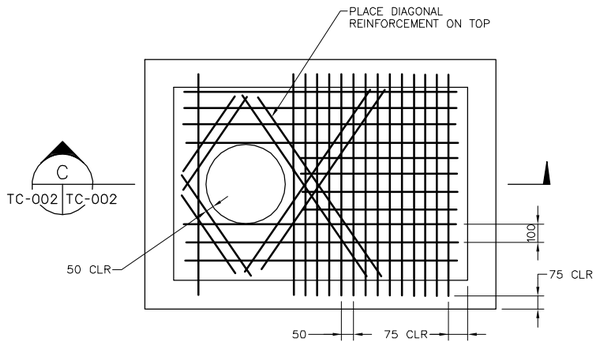

NOTE:

REINFORCEMENT TO CONSIST OF 12 ø DEFORMED BARS.

TYPICAL ROOF REINFORCEMENT MANHOLE TYPE "J"
N.T.S.

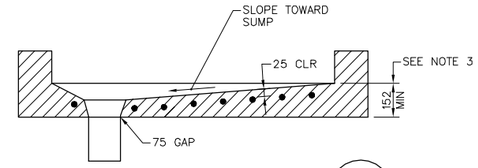

SECTION D
N.T.S.
TC-002 TC-002

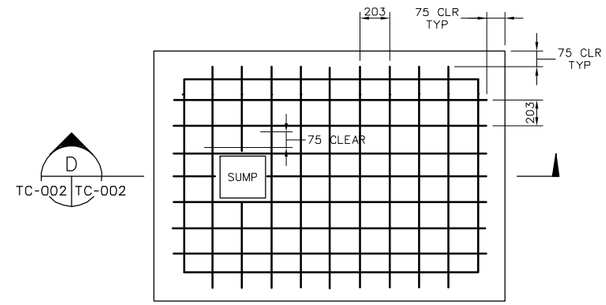

NOTES:

1. 16 ø DEFORMED BARS AT 203 ON CENTER.
2. PROVIDE A MINIMUM OF 51mm CONCRETE BELOW BARS.

TYPICAL FLOOR REINFORCEMENT MANHOLE TYPE "J"
N.T.S.

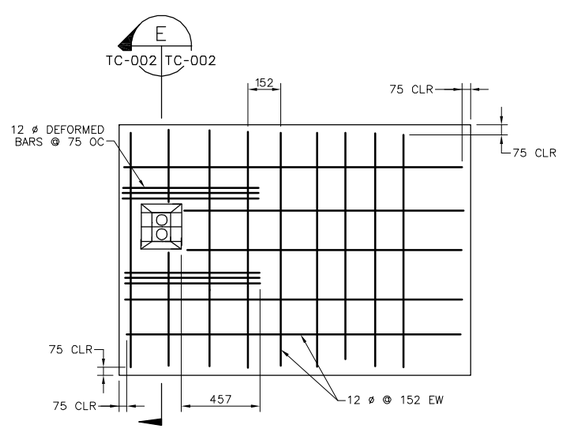

TYPICAL WALL REINFORCEMENT MANHOLE TYPE "J"
N.T.S.

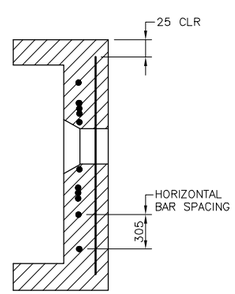

SECTION E
N.T.S.
TC-002 TC-002

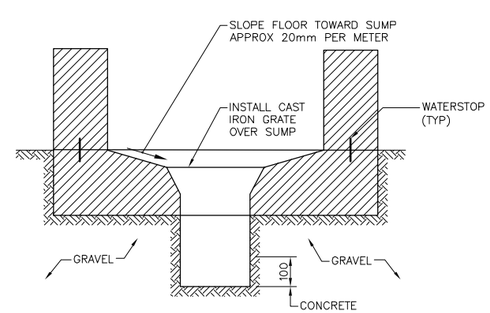

MANHOLE SUMP AND DRAIN CONSTRUCTION
N.T.S.

NOTES:

1. PROVIDE A MINIMUM OD 51mm OF CONCRETE BELOW AND ABOVE BARS.
2. LOWEST BAR TO HAVE 75mm OF CONCRETE BETWEEN BAR AND GROUND.

UNLESS OTHERWISE NOTED, ALL LINEAR DIMENSIONS SHOWN ARE IN MILLIMETERS.

FINAL CORRECTED DESIGN UPDATE 3

SYMB	DESCRIPTION	DATE	APR
3	FINAL CORRECTED DESIGN UPDATE 3	11/16/11	GCH
2	FINAL CORRECTED DESIGN UPDATE 2	11/10/11	GCH
1	FINAL CORRECTED DESIGN UPDATE 1	10/31/11	GCH
0	FINAL CORRECTED DESIGN SUBMITTAL	10/06/11	GCH
B	FINAL DESIGN SUBMITTAL	09/21/11	GCH
A	50% DESIGN SUBMITTAL	08/24/11	GCH

DESIGNED BY: SPD
DATE: 11-16-11
DRAWN BY: SPD
SUBMITTED BY: TETRA TECH
CHECKED BY: GCH
FILE NO.: AF1139--XT502DT

TETRA TECH

US Army Corps of Engineers
Middle East District

SOF HELICOPTER APRON
FOB HERAT
HERAT PROVINCE, AFGHANISTAN
SITE DESIGN
COMMUNICATION DETAILS
SHEET 2 OF 4

SHEET REFERENCE NUMBER:
-
XT-502

NOT FOR CONSTRUCTION

W:\23308\127-23308-11010\CAD\MED_Drawings\Site Design\Telecommunications\AF1139--XT502DT.dwg 11/15/2011 5:54:29 PM Barrett, Patrick

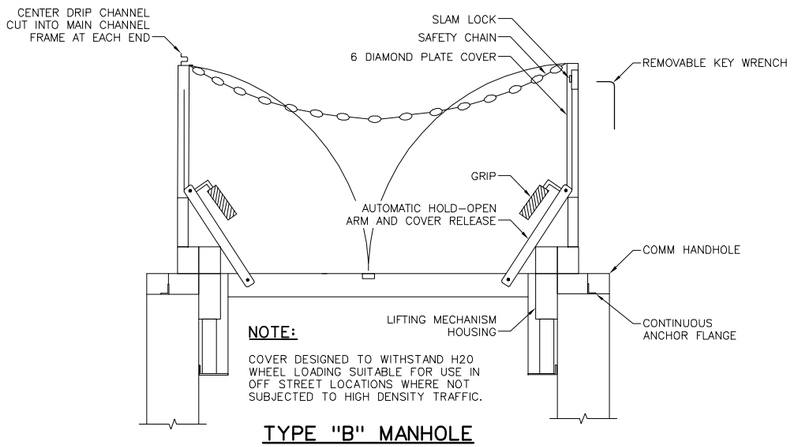

NOTE:

COVER DESIGNED TO WITHSTAND H20 WHEEL LOADING SUITABLE FOR USE IN OFF STREET LOCATIONS WHERE NOT SUBJECTED TO HIGH DENSITY TRAFFIC.

TYPE "B" MANHOLE FRAME AND COVER DETAILS

N.T.S.

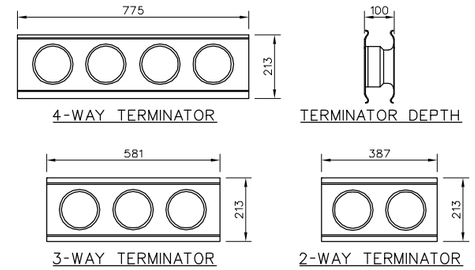

NOTES:

1. TERMINATORS SHALL BE CONNECTED (INTERLOCKED) TO FORM PANELS AS REQUIRED BY DUCT CONFIGURATION.
2. REINFORCING BARS SHALL BE INSTALLED BETWEEN TERMINATORS.
3. DUCT TERMINATORS SHALL BE SIZED FOR 114mm OUTER DIAMETER.

DUCT TERMINATORS

N.T.S.

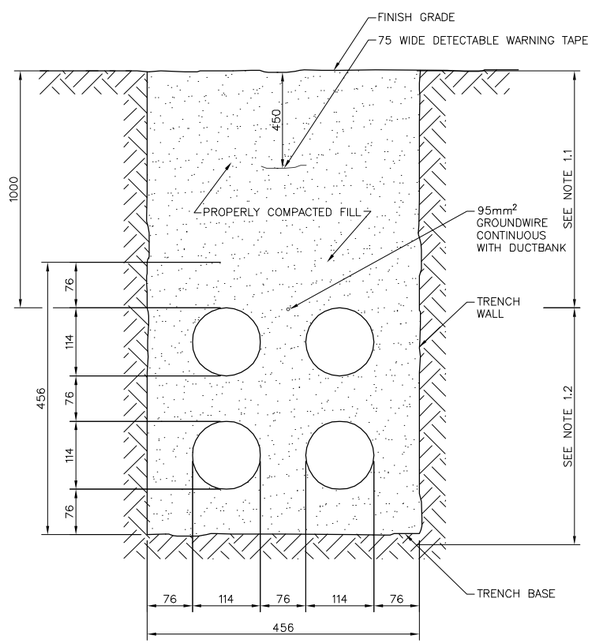

NOTES:

1. GW, GP, SW, SP AS DETERMINED BY ASTM D 2487: COMPACT TO 95% MAXIMUM DENSITY AS DETERMINED BY ASTM D 1557, PROCEDURE C
2. GW, GP, SW, SP AS DETERMINED BY ASTM D 2487AND FREE OF ROCKS: COMPACT TO 95% MAXIMUM DENSITY AS DETERMINED BY ASTM D 1557, PROCEDURE C
3. COMPACT IN 150mm LOOSE LIFTS.
4. PLASTIC DUCT SPACERS NOT TO BE USED.

DIRECT-BURIED DUCTBANK

N.T.S.

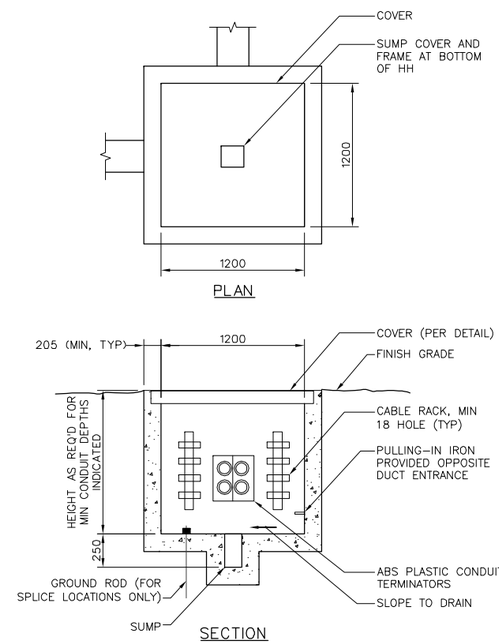

NOTE:

BONDING RIBBON TO BE INSTALLED AROUND THE PERIMETER OF THE HANDHOLE.

MINIMUM REINFORCING:

1. BARS SHALL BE A MIMIMUM OF 13 ø ROUND DEFORMED.
2. WALLS AND FLOOR SHALL HAVE REINFORCING BARS AT 200 OC MAXIMUM WITH A MINIMUM 300 HOOK AT CORNERS AND INTERSECTIONS.
3. HANDHOLE TOP SHALL HAVE REINFORCING BARS INSTALLED AS SHOWN AT A MINIMUM OF 50 FROM THE OPENING AND A MINIMUM SPACING OF 100 BETWEEN BARS.

COMMUNICATION HANDHOLE DETAIL

N.T.S.

UNLESS OTHERWISE NOTED, ALL LINEAR DIMENSIONS SHOWN ARE IN MILLIMETERS.

FINAL CORRECTED DESIGN UPDATE 3

SYMB	DESCRIPTION	DATE	APR
3	FINAL CORRECTED DESIGN UPDATE 3	11/16/11	GCH
2	FINAL CORRECTED DESIGN UPDATE 2	11/10/11	GCH
1	FINAL CORRECTED DESIGN UPDATE 1	10/31/11	GCH
0	FINAL CORRECTED DESIGN SUBMITTAL	10/06/11	GCH
B	FINAL DESIGN SUBMITTAL	09/21/11	GCH
A	50% DESIGN SUBMITTAL	08/24/11	GCH

DESIGNED BY: SPD
DATE: 11-16-11
DRAWN BY: SPD
SUBMITTED BY: TETRA TECH
CHECKED BY: GCH
FILE NO.: AF1139--XT5030T

TETRA TECH

US Army Corps of Engineers
Middle East District

SOF HELICOPTER APRON
FOB HERAT
HERAT PROVINCE, AFGHANISTAN
SITE DESIGN
COMMUNICATION DETAILS
SHEET 3 OF 4

SHEET REFERENCE NUMBER:
-
XT-503

NOT FOR CONSTRUCTION

W:\23308\127-23308-11010\CAD\MED_Drawings\Site Design\Telecommunications\AF1139--XT5030T.dwg 11/15/2011 5:54:51 PM Barrett, Patrick

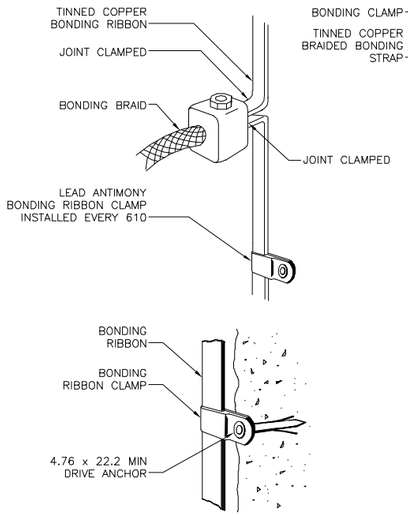

BONDING RIBBON ATTACHMENT
N.T.S.

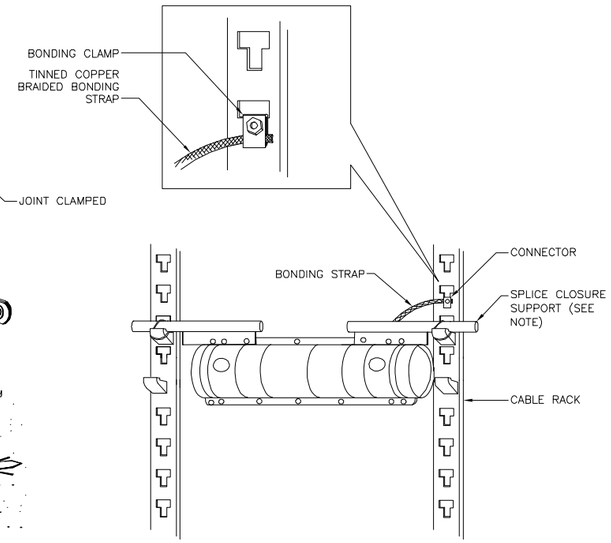

SPLICE CLOSURE GROUNDING
N.T.S.

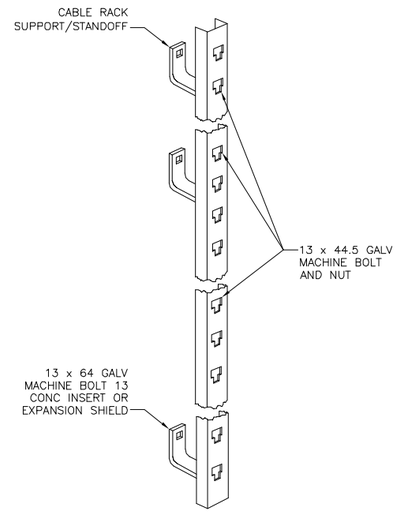

CABLE RACK DETAIL
(TYPICAL 47-HOLE RELAY RACK)
N.T.S.

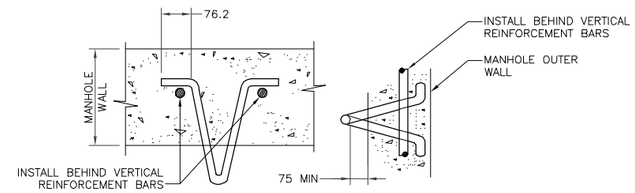

PLAN VIEW SIDE VIEW

NOTE:

ACTUAL EMBEDMENT SHALL BE IN ACCORDANCE WITH THE PULLING IRON MANUFACTURER'S REQUIREMENTS.

TYPICAL PULLING-IN IRON
N.T.S.

NOTE:

IF CLOSURE SUPPORTS ARE NOT USED THE CLOSURE WILL BE SUPPORTED BY THE CABLES IN THE END PLATES WHICH WILL BE SUPPORTED BY THE HOOKS

UNLESS OTHERWISE NOTED, ALL LINEAR DIMENSIONS SHOWN ARE IN MILLIMETERS.

FINAL CORRECTED DESIGN UPDATE 3

SYMB	DESCRIPTION	DATE	APR
3	FINAL CORRECTED DESIGN UPDATE 3	11/16/11	GCH
2	FINAL CORRECTED DESIGN UPDATE 2	11/10/11	GCH
1	FINAL CORRECTED DESIGN UPDATE 1	10/31/11	GCH
0	FINAL CORRECTED DESIGN SUBMITTAL	10/06/11	GCH
B	FINAL DESIGN SUBMITTAL	09/21/11	GCH
A	50% DESIGN SUBMITTAL	08/24/11	GCH

DESIGNED BY: SPD
DATE: 11-16-11
DRAWN BY: SPD
SUBMITTED BY: TETRA TECH
CHECKED BY: GCH
FILE NO.: AF1139--XT504DT

TETRA TECH

US Army Corps of Engineers
Middle East District

SOF HELICOPTER APRON
FOB HERAT
HERAT PROVINCE, AFGHANISTAN
SITE DESIGN
COMMUNICATION DETAILS
SHEET 4 OF 4

SHEET REFERENCE NUMBER:
-
XT-504

NOT FOR CONSTRUCTION

W:\23308\127-23308-11010\CAD\MED_Drawings\Site Design\Telecommunications\AF1139--XT504DT.dwg 11/15/2011 5:55:06 PM Barrett, Patrick

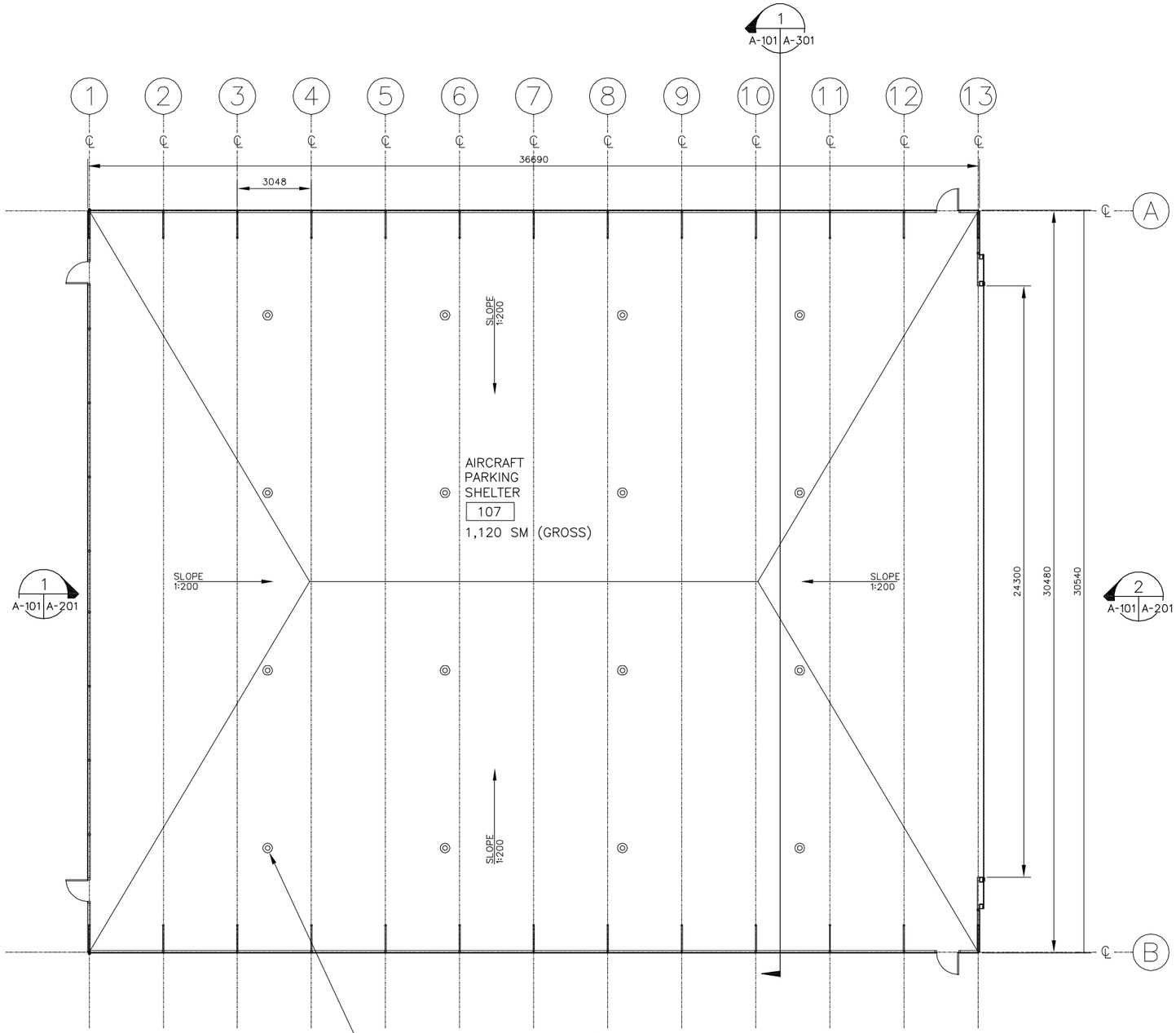

FLOOR PLAN
SCALE 1:100
1
A-101 A-101

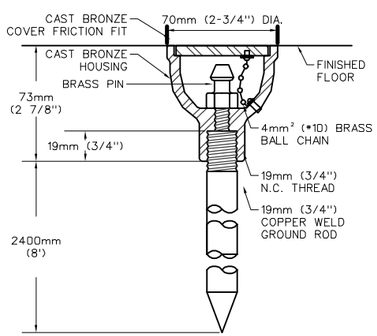

STATIC GROUND POINT
INSIDE AIRCRAFT SHELTERS
N.T.S.
2
A-101 A-101

NOTES:

1. PLAN IS CONCEPTUAL AND THE FINAL DESIGN IS TO BE PERFORMED BY THE DESIGN/BUILD CONTRACTOR TO COMPLY WITH THE RFP, SPECIFICATION SECTION 01 80 00.12 10 AND ALL APPLICABLE CODES.

1 0 1 2 3 4 5 6 7 8 9
1:100

UNLESS OTHERWISE NOTED, ALL LINEAR DIMENSIONS SHOWN ARE IN MILLIMETERS.

FINAL CORRECTED DESIGN UPDATE 3

SYMB	DESCRIPTION	DATE	APR
3	FINAL CORRECTED DESIGN UPDATE 3	11/16/11	WESR
2	FINAL CORRECTED DESIGN UPDATE 2	11/10/11	WESR
1	FINAL CORRECTED DESIGN UPDATE 1	10/31/11	WESR
0	FINAL CORRECTED DESIGN SUBMITTAL	10/06/11	WESR
B	FINAL DESIGN SUBMITTAL	09/21/11	WESR
A	50% DESIGN SUBMITTAL	08/24/11	WESR

DESIGNED BY: PTO
DATE: 11-16-11
DRAWN BY: PTO
SUBMITTED BY: TETRA TECH
CHECKED BY: WESR
FILE NO.: AF1139A-AE101PN

TETRA TECH

US Army Corps of Engineers
Middle East District

SOF HELICOPTER APRON
FOB HERAT
HERAT PROVINCE, AFGHANISTAN
AIRCRAFT PARKING SHELTER
FLOOR PLAN

SHEET REFERENCE NUMBER:
A
A-101

NOT FOR CONSTRUCTION

W:\23308\127-23308-11010\CAD\MED_Drawings\AF1139A\Architectural\AF1139A-AE101PN.dwg 11/15/2011 5:57:32 PM Barrett, Patrick

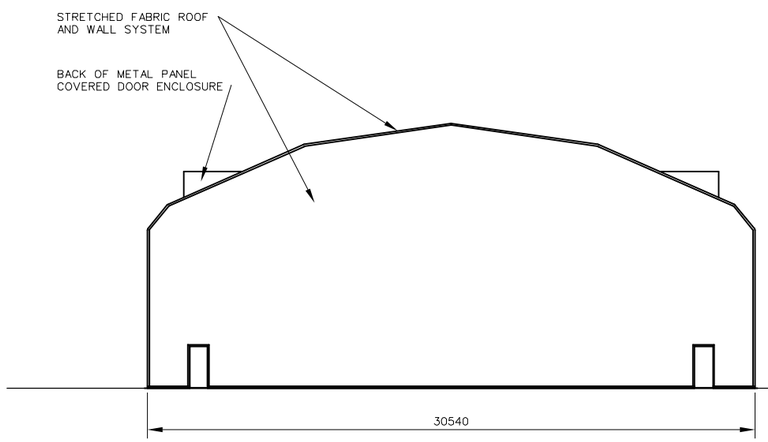

BACK ELEVATION (1 / A-101 | A-201)
SCALE 1:150

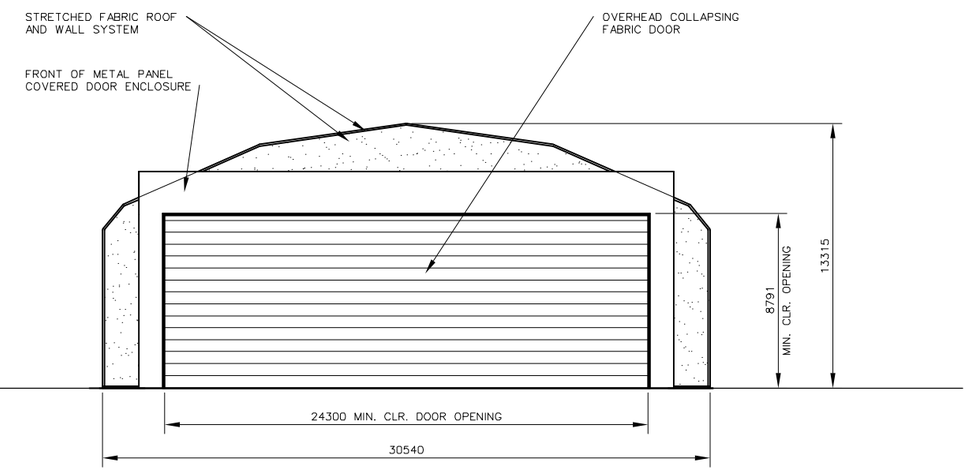

FRONT ELEVATION (2 / A-101 | A-201)
SCALE 1:150

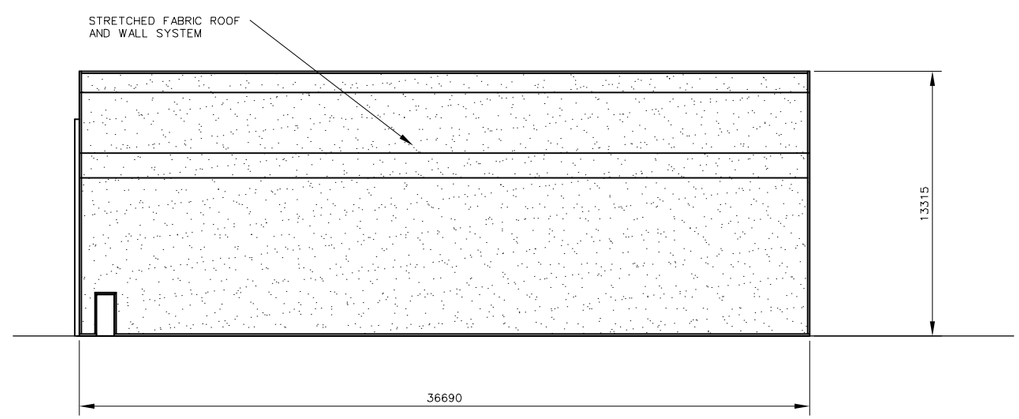

SIDE ELEVATION (3 / A-101 | A-201)
SCALE 1:150

NOTES:

1. PLAN IS CONCEPTUAL AND THE FINAL DESIGN IS TO BE PERFORMED BY THE DESIGN/BUILD CONTRACTOR TO COMPLY WITH THE RFP, SPECIFICATION SECTION 01 80 00.12 10 AND ALL APPLICABLE CODES.

5 0 5 10
1:150

UNLESS OTHERWISE NOTED, ALL LINEAR DIMENSIONS SHOWN ARE IN MILLIMETERS.

FINAL CORRECTED DESIGN UPDATE 3

SYMB	DESCRIPTION	DATE	APR
3	FINAL CORRECTED DESIGN UPDATE 3	11/16/11	WESR
2	FINAL CORRECTED DESIGN UPDATE 2	11/10/11	WESR
1	FINAL CORRECTED DESIGN UPDATE 1	10/31/11	WESR
0	FINAL CORRECTED DESIGN SUBMITTAL	10/06/11	WESR
B	FINAL DESIGN SUBMITTAL	09/21/11	WESR
A	50% DESIGN SUBMITTAL	08/24/11	WESR

DESIGNED BY: PTO
DATE: 11-16-11
DRAWN BY: PTO
SUBMITTED BY: TETRA TECH
CHECKED BY: WESR
FILE NO.: AF1139A-AE201EL

TETRA TECH

US Army Corps of Engineers
Middle East District

SOF HELICOPTER APRON
FOB HERAT
HERAT PROVINCE, AFGHANISTAN
AIRCRAFT PARKING SHELTER
BUILDING ELEVATIONS

SHEET REFERENCE NUMBER:
A
A-201

NOT FOR CONSTRUCTION

W:\23308\127-23308-11010\CAD\MED_Drawings\AF1139A\Architectural\AF1139A-AE201EL.dwg 11/15/2011 5:57:48 PM Barrett, Patrick

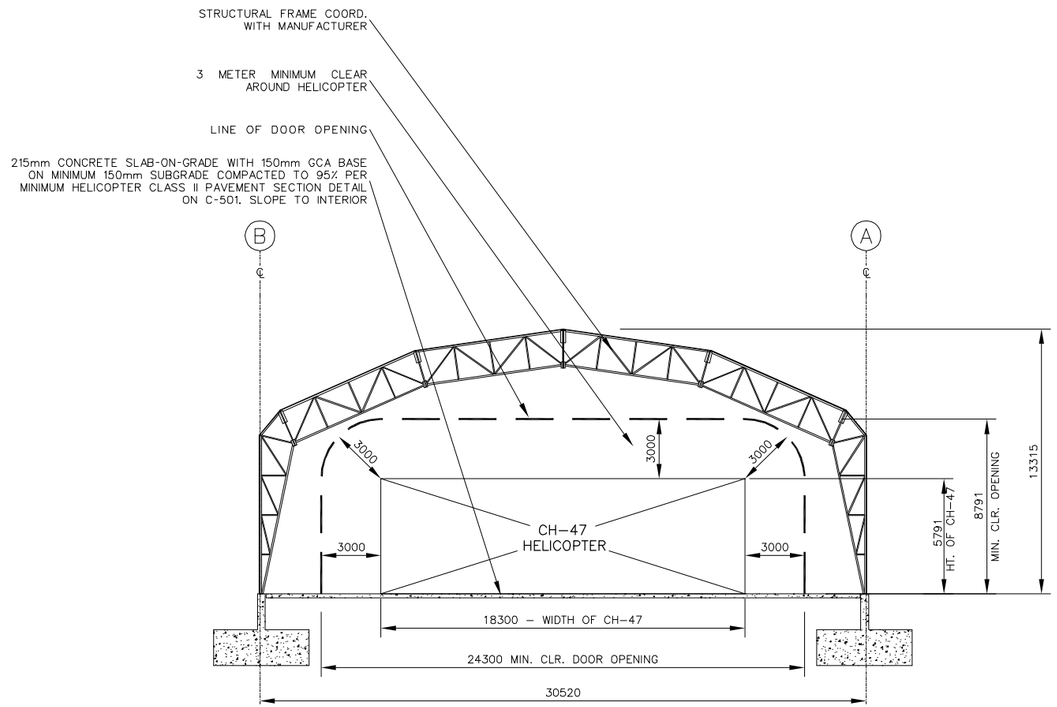

BUILDING SECTION
SCALE 1:150

1
A-101 A-301

NOTES:

1. PLAN IS CONCEPTUAL AND THE FINAL DESIGN IS TO BE PERFORMED BY THE DESIGN/BUILD CONTRACTOR TO COMPLY WITH THE RFP, SPECIFICATION SECTION 01 80 00.12 10 AND ALL APPLICABLE CODES.
2. SEE C-502 FOR TYPICAL JOINT DETAILS ASSOICATED WITH CONCRETE SLAB-ON-GRADE.

5 0 5 10
1:150

UNLESS OTHERWISE NOTED, ALL LINEAR DIMENSIONS SHOWN ARE IN MILLIMETERS.

FINAL CORRECTED DESIGN UPDATE 3

SYMB	DESCRIPTION	DATE	APR
3	FINAL CORRECTED DESIGN UPDATE 3	11/16/11	WESR
2	FINAL CORRECTED DESIGN UPDATE 2	11/10/11	WESR
1	FINAL CORRECTED DESIGN UPDATE 1	10/31/11	WESR
0	FINAL CORRECTED DESIGN SUBMITTAL	10/06/11	WESR
B	FINAL DESIGN SUBMITTAL	09/21/11	WESR
A	50% DESIGN SUBMITTAL	08/24/11	WESR

DESIGNED BY: PTO
DATE: 11-16-11
DRAWN BY: PTO
SUBMITTED BY: TETRA TECH
CHECKED BY: WESR
FILE NO.: AF1139A-AE301SE

TETRA TECH

US Army Corps of Engineers
Middle East District

SOF HELICOPTER APRON
FOB HERAT
HERAT PROVINCE, AFGHANISTAN
AIRCRAFT PARKING SHELTER
BUILDING SECTION

SHEET REFERENCE NUMBER:
A
A-301

NOT FOR CONSTRUCTION

W:\23308\127-23308-11010\CAD\MED_Drawings\AF1139A\Architectural\AF1139A-AE301SE.dwg 11/15/2011 5:58:05 PM Barrett, Patrick