S. MORGAN SMITH CO., YORK, PENNSYLVANIA, U. S. A.

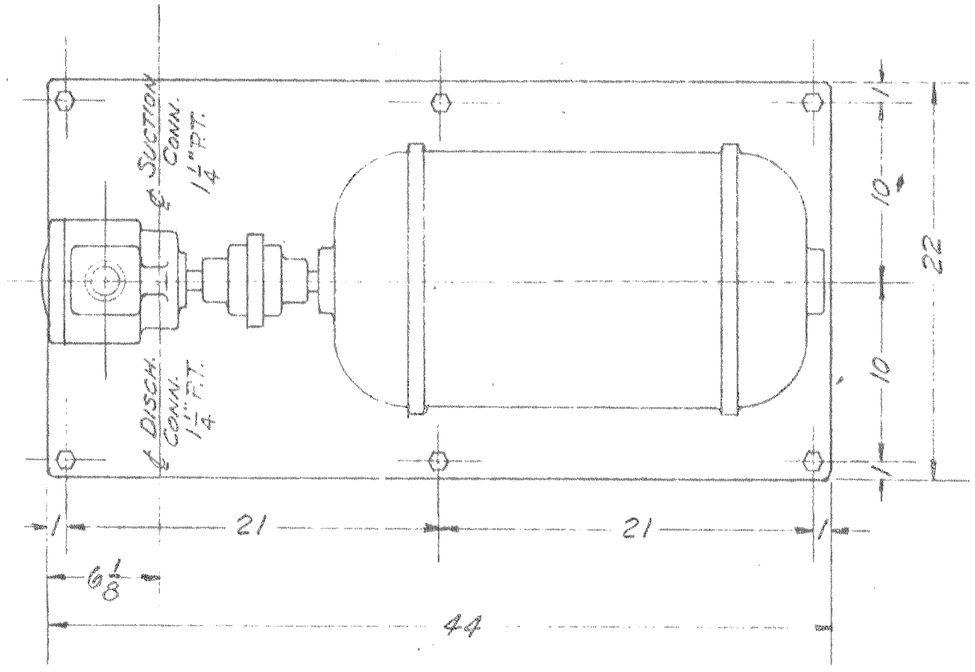

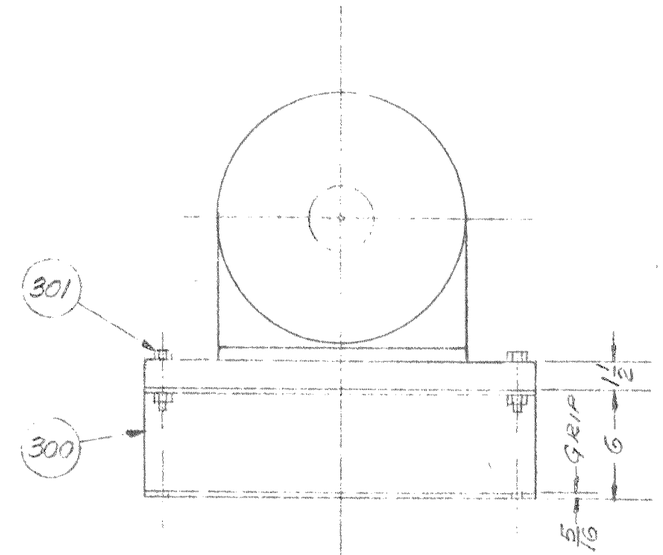

APPROVED

SUBJECT TO THE [illegible] WHICH MAY BE NOTED HEREON, [illegible] RESPONSIBILITY FOR COMPLIANCE [illegible] APPROVAL OF THE DESIGN INHERENT WITH THE MATERIALS TO BE [illegible] MANUFACTURER SHALL BE FULLY RESPONSIBLE FOR PROPER FIT OF PARTS OF HIS OWN MANUFACTURE, AND FOR CONFORMANCE WITH DIMENSIONS OR [illegible] CLEARLY SET FOURTH IN THE DESIGNS AND SPECIFICATIONS PREPARED FOR THIS WORK. APPROVAL DOES NOT CONSTITUTE ACCEPTANCE OF THE CORRECTNESS OF DIMENSIONS ORIGINATED BY THE MANUFACTURER IN CONNECTION WITH THIS WORK.

INTERNATIONAL ENGINEERING CO., INC.

By N. L. Henkson

SEP 24 1952

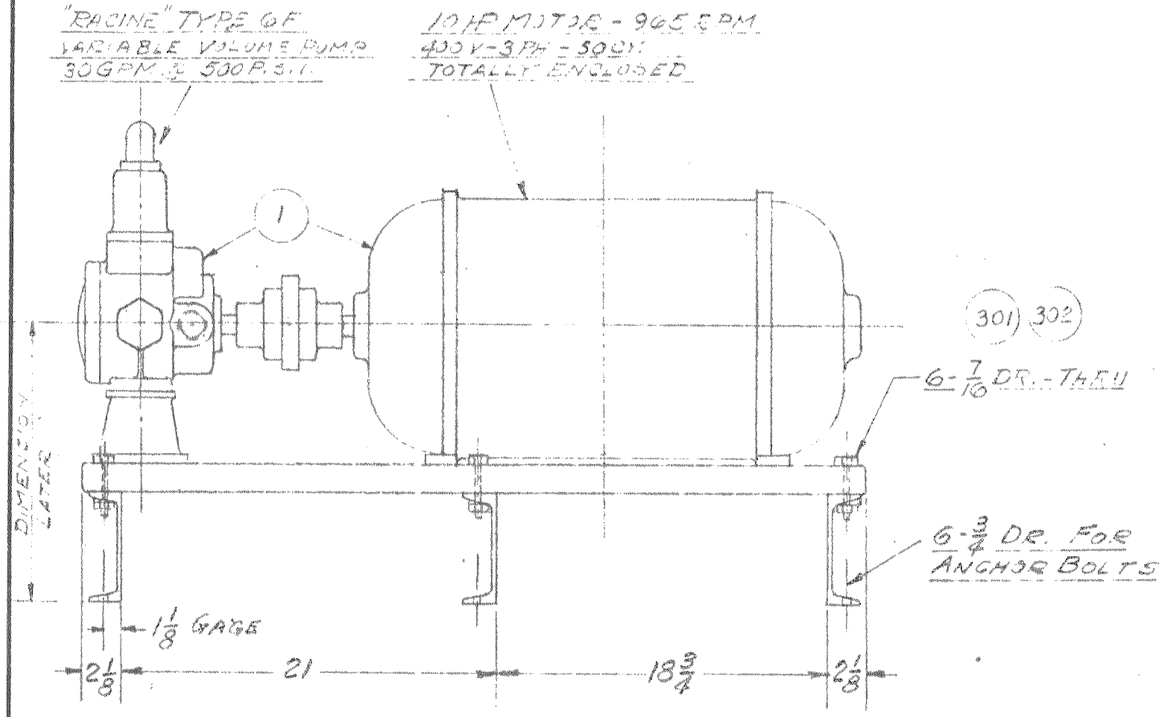

No. REQ. FOR ONE UNIT	LIST OF PARTS	ITEM	MAT'L.	MAT'L. SPECS.	PATT. NO. AND REMARKS
12	3/8" BEVELED WASHER	302	M.I.	COMM.	
12	3/8"-16 N.C. x 3" LG. BOLT	301	ST.	COMM.	WITH NUT
6	6" @ 8.2# [x 22" LG.	300	ST.	A7-49T	1PC-134" LG. CUTS 6

69688	SHOP ORDERS	MASTER No 500
1	No. OF UNITS REQ.	

SHOP NOTES

UNLESS OTHERWISE NOTED:
MACHINING TOLERANCES TO BE
± 1/64 ON FRACTIONAL DIMENSIONS
+ .0015" - .0005" FOR REAMED HOLES
+ .001" - .0005" FOR BORED HOLES
BREAK ALL CORNERS 1/64
SYMBOL (±) DENOTES REFERENCE DIMENSION

No.	S. O.	REVISIONS	APPRD	CHK'D	DRAWN	DATE
I	69688	CORR. CURRENT CHAR.	[illegible]	E.W.S.	J.W.	9-15-52
			HES	[illegible]	E.W.S.	7-14-52

SCALE 1 1/2" = 1'-0"

MOUNTING DETAILS
MOTOR-PUMP UNIT
84"-115# ROTOVALVE

6084-AD-3