AMENDMENT OF SOLICITATION/MODIFICATION OF CONTRACT

1. CONTRACT ID CODE	PAGE OF PAGES	
J	1	5

2. AMENDMENT/MODIFICATION NO.	3. EFFECTIVE DATE	4. REQUISITION/PURCHASE REQ. NO.	5. PROJECT NO.(If applicable)
0001	11-Jan-2012		

6. ISSUED BY CODE W912DQ

USACE, KANSAS CITY
FEDERAL BUILDING CT-M, RM 647 601 EAST 12
KANSAS CITY MO 64106-2896

7. ADMINISTERED BY (If other than item 6) CODE

See Item 6

8. NAME AND ADDRESS OF CONTRACTOR (No., Street, County, State and Zip Code)

CODE FACILITY CODE

X	9A. AMENDMENT OF SOLICITATION NO. W912DQ-12-R-4002
X	9B. DATED (SEE ITEM 11) 08-Dec-2011
	10A. MOD. OF CONTRACT/ORDER NO.
	10B. DATED (SEE ITEM 13)

11. THIS ITEM ONLY APPLIES TO AMENDMENTS OF SOLICITATIONS

[X] The above numbered solicitation is amended as set forth in Item 14. The hour and date specified for receipt of Offer [ ] is extended, [X] is not extended.

Offer must acknowledge receipt of this amendment prior to the hour and date specified in the solicitation or as amended by one of the following methods: (a) By completing Items 8 and 15, and returning 1 copies of the amendment; (b) By acknowledging receipt of this amendment on each copy of the offer submitted; or (c) By separate letter or telegram which includes a reference to the solicitation and amendment numbers. FAILURE OF YOUR ACKNOWLEDGMENT TO BE RECEIVED AT THE PLACE DESIGNATED FOR THE RECEIPT OF OFFERS PRIOR TO THE HOUR AND DATE SPECIFIED MAY RESULT IN REJECTION OF YOUR OFFER. If by virtue of this amendment you desire to change an offer already submitted, such change may be made by telegram or letter, provided each telegram or letter makes reference to the solicitation and this amendment, and is received prior to the opening hour and date specified.

12. ACCOUNTING AND APPROPRIATION DATA (If required)

13. THIS ITEM APPLIES ONLY TO MODIFICATIONS OF CONTRACTS/ORDERS. IT MODIFIES THE CONTRACT/ORDER NO. AS DESCRIBED IN ITEM 14.

[ ] A. THIS CHANGE ORDER IS ISSUED PURSUANT TO: (Specify authority) THE CHANGES SET FORTH IN ITEM 14 ARE MADE IN THE CONTRACT ORDER NO. IN ITEM 10A.

[ ] B. THE ABOVE NUMBERED CONTRACT/ORDER IS MODIFIED TO REFLECT THE ADMINISTRATIVE CHANGES (such as changes in paying office, appropriation date, etc.) SET FORTH IN ITEM 14, PURSUANT TO THE AUTHORITY OF FAR 43.103(B).

[ ] C. THIS SUPPLEMENTAL AGREEMENT IS ENTERED INTO PURSUANT TO AUTHORITY OF:

[ ] D. OTHER (Specify type of modification and authority)

E. IMPORTANT: Contractor [ ] is not, [ ] is required to sign this document and return _____ copies to the issuing office.

14. DESCRIPTION OF AMENDMENT/MODIFICATION (Organized by UCF section headings, including solicitation/contract subject matter where feasible.)

See continuation page for the purpose for this Amendment.

Except as provided herein, all terms and conditions of the document referenced in Item 9A or 10A, as heretofore changed, remains unchanged and in full force and effect.

15A. NAME AND TITLE OF SIGNER (Type or print)		16A. NAME AND TITLE OF CONTRACTING OFFICER (Type or print) TEL: EMAIL:	
15B. CONTRACTOR/OFFEROR (Signature of person authorized to sign)	15C. DATE SIGNED	16B. UNITED STATES OF AMERICA BY (Signature of Contracting Officer)	16C. DATE SIGNED 11-Jan-2012

SECTION SF 30 BLOCK 14 CONTINUATION PAGE

SUMMARY OF CHANGES

The SOLICITATION is amended as follows:

1. SECTION 00 11 00 - SOLICITATION/CONTRACT FORM: The required response date/time remains 24 January 2012 at 1:00 PM Central Standard Time. Kansas City, Missouri.

2. SPECIFICATIONS: Narrative: Deleted text is shown with ~~strikethrough~~. Added text is shown with underline.

   a. Section 00010, Para. 0001B Site Development/Improvements – has been changed as follows:

a.	0001BJ	Motor Pool with Fuel Storage	LS	$
b.	0001BR	Temporary Entry Control Point	LS	$
c.	0001BS	Fuel Storage & Refueling Point (VRP)	LS	$

These changes are incorporated into the revised Supplemental bid schedule inlcuded on page 4 of this amendment

   b. Section 01010, Para. 2.4.c – has been revised as follows:

Alaska and/or Wisconsin style concrete passive barriers (minimum height of three (3) meters) shall be placed around all fuel storage locations, including, but not limited to the NPC backup generator, DFC propane storage area, and the fuel storage for vehicle refueling. The barriers shall be set a minimum of two (2) meters away from the structure to allow for proper ventilation of the generators. See construction drawings in Appendix B for approximate locations.

   c. Section 01010, the following paragraph has been added:

2.4.1 TEMPORARY ENTRY CONTROL POINT

A temporary ECP shall be constructed immediately once the Contractor mobilizes to the site. The temporary ECP shall include the entire area to be gravel pavement, a temporary guard shack that must be approved by the COR prior to installation, vehicle drop arm barriers, and HESCOs. The contractor is required to remove a portion of the existing stone wall. The interior HESCO barriers must be installed prior to the existing stone wall being breached. Chain link gates, including concertina wire and sniper screening, must be installed at the entrance and exit of the temporary ECP. Upon completion of construction or the completion of the eastern primary ECPs (not in this contract), the contractor must remove the temporary ECP in its entirety, rebuild the perimeter wall back to existing conditions or better, and complete the remainder of the improvements in the area of the temporary ECP. Refer to Appendix B for related drawings and details.

The Contractor shall design, furnish, install, and maintain a temporary lighting system for the illumination of the construction entry control point (ECP). Temporary material and components that are furnished by the Contractor remain the property of the Contractor. The temporary lighting system shall include a generator, temporary lighting assemblies, poles, wires, conduit, and generator fuel. This system shall be designed, furnished, installed, maintained, repaired,

and replaced as necessary during operation of the construction ECP. The illumination level shall be maintained from the drive entry to the guard shack as 5 footcandles average at ground level. Provide controls so the lighting can be operated manual turned on and off and automatically turned on via an exterior photoelectric cell. Once the temporary system is no longer necessary, the generator, temporary lighting assemblies, poles, wires, and conduit shall be dismantled and removed from the site.

d. Section 01010, paragraph 2.15.2 a is changed to read as follows:

All requirements set forth in this Scope of Work, but not included in Section 01015 TECHNICAL REQUIREMENTS, shall be considered as set forth in both~~, vice versa~~. If there is a conflict between the documents, please see Section 3.5 Order of Presence.

e. Section 52.228-15 Performance and Payment Bonds:

Due to the magnitude of this project no waiver of the bonding requirements will be issued.

3. DRAWINGS: Additional and Revised Drawings

The following additional drawings accompany this amendment:

W06_GI002.pdf
W06_CS301.pdf

The following revised drawings accompany this amendment:

W06_NPC_M-601.pdf
W06_OBK_M-101. pdf
W06_ATC_A-301. pdf
W06_ATC_A-401. pdf
W06_ATC_A-501. pdf
W06_ATC_A-502. pdf
W06_ATC_A-503. pdf

4. All other terms and conditions remain unchanged and in full force.

SECTION 00010

PRICE PROPOSAL SCHEDULE
MOI COMPLEX - NPCC

This Price Proposal Schedule is information supplemental to the CLIN and is not part of the contract.

No.	*Description*	*Qty*	*Unit*	*Unit Price*	*Total Amount*
Base Proposal Items:					
0001A	**DESIGN PROGRAM**				
0001AA	As-Built Drawings		LS		$_____
0001AB	Well Investigation, Design, Report		LS		$_____
0001B	**SITE DEVELOPMENT/IMPROVEMENTS**				
0001BA	Mob/Demobilization		LS		$_____
0001BB	Site Grading and Demolition		LS		$_____
0001BC	Asphalt and Concrete Roads		LS		$_____
0001BD	Parking Lots		LS		$_____
0001BE	Sidewalks		LS		$_____
0001BF	Sports Recreation Field and Track		LS		$_____
0001BG	Volleyball Court	4	EA	$_____	$_____
0001BH	Secondary Entry Control Point (ECP)		LS		$_____
0001BJ	Motor Pool with Fuel Storage		LS		$_____
0001BK	Fencing		LS		$_____
0001BL	Site Storm Water Sewer		LS		$_____
0001BM	Site Water Distribution System		LS		$_____
0001BN	Site Sanitary Sewer System		LS		$_____
0001BP	Site Electrical Power Distribution		LS		$_____
0001BQ	Site Communication Distribution		LS		$_____
0001BR	Temporary Entry Control Point		LS		$_____
0001BS	Fuel Storage & Vehicle Refueling Point (VRP)		LS		$_____
0001C	**FACILITIES**				
0001CA	National Police Command Center (NPC)	1	EA		$_____
0001CB	NPCC Gate House (NGT)	1	EA		$_____
0001CC	Emergency Generator Canopy (EG2)	1	SM	$_____	$_____
0001CD	Interview Building (INT)	1	EA		$_____
0001CE	Administration Buildings (ADM)	12	EA	$_____	$_____
0001CF	Admin Training Company (ATC)	1	LS		$_____
0001CG	Auditorium (AUD)	1	LS		$_____
0001CH	Dining Facility – 3000 (DFC)	1	LS		$_____
	Propane Storage				
	Wood Storage				
0001CJ	Enlisted Barracks (EBK)	2	EA	$_____	$_____
0001CK	Officer Barracks (OBK)	2	EA	$_____	$_____
0001CL	Laundry (LND)	1	EA		$_____
0001CM	Fitness Center (FIT)	1	EA		$_____
0001CN	Medical Clinic – Small (MED)	1	EA		$_____

0001CP	Small Arms Storage (SAS)	1	EA		$_____
0001CQ	Weapons Storage (ASP)	1	EA		$_____
0001CR	Storage Building (STO)	1	EA		$_____
0001CS	Vehicle Maintenance Facility (VMF)	1	EA		$_____
0001CT	POL Building (POL)	1	EA		$_____
0001CU	Well House (WEL)	1	EA	$_____	$_____
0001CV	Guard Shack (GRD)	2	EA	$_____	$_____
0001CW	Guard Tower Renovations (SGD)	6	EA	$_____	$_____
0001CX	Trash Collection Points (TCP)	36	EA	$_____	$_____
0001CY	Personnel Bunkers (BNK)	81	EA	$_____	$_____

0002	**DBA INSURANCE**		
0002	DBA Insurance	LS	$_____

TOTAL PROPOSAL FOR ALL ITEMS: **$_____**
(Total of all above costs)

PRICE PROPOSAL SCHEDULE NOTES

1. Offeror shall submit prices on all items. Each item is described in Section 01010 SCOPE OF WORK.
2. Unit price (M, SM, CM) example: CM $_____ = the price of 1 cubic meter of an item. Total quantities and amounts are the responsibility of the proposer.
3. Unit price example for "EA," Each. Where EA is used, 5 EA $____ = the price of one item.
4. Abbreviations:

EA=	Each
LS =	Lump Sum
NTE =	Not To Exceed
QTY =	Quantity
M=	Meters
SM=	Square Meters
CM=	Cubic Meters (this section only)

-END OF SECTION-

(End of Summary of Changes)

INDEX

SHEET NO.	TITLE	FILE NAME
	GENERAL	
GI001	COVER	W06_GI001.dgn
GI002	INDEX	W06_GI002.dgn
GI003	INDEX	W06_GI003.dgn
GI004	ABBREVIATIONS	W06_GI004.dgn
GI005	LEGEND	W06_GI005.dgn
GI006	LOCATION MAP	W06_GI006.dgn
	SITE DRAWINGS	
	CIVIL	
CE100	EXISTING CONDITIONS AND DEMOLITION PLAN	W06_CE100.DGN
CS100	OVERALL SITE PLAN	W06_CS100.DGN
CS101	SITE PLAN - NPCC	W06_CS101.DGN
CS102	SITE PLAN - ADMINISTRATION BUILDINGS	W06_CS102.DGN
CS103	SITE PLAN - BARRACKS	W06_CS103.DGN
CS104	SITE PLAN - INTERVIEW BUILDING	W06_CS104.DGN
CS105	SITE PLAN - DINING FACILITY AND AUDITORIUM	W06_CS105.DGN
CS106	SITE PLAN - VEHICLE MAINTENANCE FACILITY	W06_CS106.DGN
CS107	SITE PLAN - SPORTS FIELD	W06_CS107.DGN
CS201	DIMENSIONAL PLAN - NPCC	W06_CS201.DGN
CS202	DIMENSIONAL PLAN - ADMINISTRATION BUILDINGS	W06_CS202.DGN
CS203	DIMENSIONAL PLAN - BARRACKS	W06_CS203.DGN
CS204	DIMENSIONAL PLAN - INTERVIEW BUILDING	W06_CS204.DGN
CS205	DIMENSIONAL PLAN - DINING FACILITY AND AUDITORIUM	W06_CS205.DGN
CS206	DIMENSIONAL PLAN - VEHICLE MAINTENANCE FACILITY	W06_CS206.DGN
CS207	DIMENSIONAL PLAN - SPORTS FIELD	W06_CS207.DGN
CS301	SITE PLAN - TEMPORARY ENTRY CONTROL POINT	W06_CS301.DGN
CS401	NPCC RETAINING WALL - SITE PLAN	W06_CS401.DGN
CS402	NPCC RETAINING WALL - DIMENSIONAL PLAN	W06_CS402.DGN
CS403	NPCC RETAINING WALL DETAIL GENERAL NOTES, KEY NOTES, ABBREVIATIONS AND LEGEND	W06_CS403.DGN
CS404	NPCC RETAINING WALL DETAILS AND SECTION	W06_CS404.DGN
CS405	FUEL STORAGE DETAILS	W06_CS405.DGN
CS406	VEHICLE REFUELING POINT DETAILS	W06_CS406.DGN
CS501	FE7 CHAIN-LINK SECURITY INTERIOR FENCE DETAIL	W06_CS501.DGN
CS502	GATE DETAILS	W06_CS502.DGN
CS503	DROP ARM BARRIER - GENERAL NOTES AND SCHEDULES	W06_CS503.DGN
CS504	DROP ARM BARRIER - BARRIER PLAN	W06_CS504.DGN
CS505	DROP ARM BARRIER - SECTIONS	W06_CS505.DGN
CS506	DROP ARM BARRIER - SECTIONS	W06_CS506.DGN
CP100	OVERALL PAVEMENT PLAN	W06_CP100.DGN
CP101	PAVEMENT PLAN - NPCC	W06_CP101.DGN
CP102	PAVEMENT PLAN - ADMINISTRATION BUILDINGS	W06_CP102.DGN
CP103	PAVEMENT PLAN - BARRACKS	W06_CP103.DGN
CP104	PAVEMENT PLAN - INTERVIEW BUILDING	W06_CP104.DGN
CP105	PAVEMENT PLAN - DINING FACILITY AND AUDITORIUM	W06_CP105.DGN
CP106	PAVEMENT PLAN - VEHICLE MAINTENANCE FACILITY	W06_CP106.DGN
CP107	PAVEMENT PLAN - SPORTS FIELD	W06_CP107.DGN
CP501	TYPICAL STREET AND PAVEMENT SECTIONS	W06_CP501.DGN
CG100	OVERALL GRADING PLAN	W06_CG100.DGN
CG101	GRADING PLAN - NPCC	W06_CG101.DGN
CG102	GRADING PLAN - ADMINISTRATION BUILDINGS	W06_CG102.DGN
CG103	GRADING PLAN - BARRACKS	W06_CG103.DGN
CG104	GRADING PLAN - INTERVIEW BUILDING	W06_CG104.DGN
CG105	GRADING PLAN - DINING FACILITY AND AUDITORIUM	W06_CG105.DGN
CG106	GRADING PLAN - VEHICLE MAINTENANCE FACILITY	W06_CG106.DGN
CG107	GRADING PLAN - SPORTS FIELD	W06_CG107.DGN
CG201	STREET PLAN AND PROFILE - STREET D	W06_CG201.DGN
CG202	STREET PLAN AND PROFILE - STREET E	W06_CG202.DGN
CG203	STREET PLAN AND PROFILE - STREET F	W06_CG203.DGN
CG204	STREET PLAN AND PROFILE - STREET G	W06_CG204.DGN
CG205	STREET PLAN AND PROFILE - STREET H	W06_CG205.DGN
CG206	STREET PLAN AND PROFILE - STREET H	W06_CG206.DGN
CG301	STORM SEWER PLAN	W06_CG301.DGN
CG302	STORM SEWER PLAN	W06_CG302.DGN
CG303	STORM SEWER PLAN	W06_CG303.DGN
CG501	BUILDING GRADING DETAILS	W06_CG501.DGN
CG502	BUILDING GRADING DETAILS	W06_CG502.DGN
CG503	BUILDING GRADING DETAILS	W06_CG503.DGN
CG504	SECTION BETWEEN DFC AND WOOD STORAGE	W06_CG504.DGN
CU100	OVERALL UTILITY PLAN	W06_CU100.DGN
CU101	UTILITY PLAN - NPCC	W06_CU101.DGN
CU102	UTILITY PLAN - ADMINISTRATION BUILDING	W06_CU102.DGN
CU103	UTILITY PLAN - BARRACKS	W06_CU103.DGN
CU104	UTILITY PLAN - INTERVIEW BUILDING	W06_CU104.DGN
CU105	UTILITY PLAN - DINING FACILITY AND AUDITORIUM	W06_CU105.DGN
CU106	UTILITY PLAN - VEHICLE MAINTENANCE FACILITY	W06_CU106.DGN
CU501	GENERAL UTILITY DETAILS	W06_CU501.DGN
CU502	TRUST BLOCK DETAILS	W06_CU502.DGN

SHEET NO.	TITLE	FILE NAME
	SITE ELECTRICAL	
ES100	OVERALL ELECTRICAL SITE PLAN	W06_ES100.DGN
ES101	PARTIAL ELECTRICAL SITE PLAN	W06_ES101.DGN
ES102	PARTIAL ELECTRICAL SITE PLAN	W06_ES102.DGN
ES103	PARTIAL ELECTRICAL SITE PLAN	W06_ES103.DGN
ES104	PARTIAL ELECTRICAL SITE PLAN	W06_ES104.DGN
ES105	PARTIAL ELECTRICAL SITE PLAN	W06_ES105.DGN
ES106	PARTIAL ELECTRICAL SITE PLAN	W06_ES106.DGN
ES107	PARTIAL ELECTRICAL SITE PLAN	W06_ES107.DGN
ES108	PARTIAL ELECTRICAL SITE PLAN	W06_ES108.DGN
E-501	ELECTRICAL SITE DETAILS	W06_E-501.DGN
E-502	ELECTRICAL SITE DETAILS	W06_E-502.DGN
E-503	ELECTRICAL SITE DETAILS	W06_E-503.DGN
E-601	SITE DISTRIBUTION ONE-LINE DIAGRAM	W06_E-601.DGN
E-602	SITE DISTRIBUTION ONE-LINE DIAGRAM - CONTINUED	W06_E-602.DGN
E-603	SITE DISTRIBUTION PANELBOARD SDP01 AND SDP03 ONE-LINE DIAGRAM	W06_E-603.DGN
E-604	SITE DISTRIBUTION PANELBOARD SDP04 AND SDP06 ONE-LINE DIAGRAM	W06_E-604.DGN
E-605	SITE DISTRIBUTION PANELBOARD SDP07 AND SDP08 ONE-LINE DIAGRAM	W06_E-605.DGN
E-606	SITE DISTRIBUTION PANELBOARD SDP09 AND SDP10 ONE-LINE DIAGRAM	W06_E-606.DGN
E-607	SITE DISTRIBUTION PANELBOARD SDP11 AND SDP13 ONE-LINE DIAGRAM	W06_E-607.DGN
E-608	SITE DISTRIBUTION PANELBOARD SDP14 ONE-LINE DIAGRAM	W06_E-608.DGN
	SITE TELECOMMUNICATION	
TS100	OVERALL TELECOMMUNICATIONS SITE PLAN	W06_TS100.DGN
TS101	PARTIAL TELECOMMUNICATIONS SITE PLAN	W06_TS101.DGN
TS102	PARTIAL TELECOMMUNICATIONS SITE PLAN	W06_TS102.DGN
TS103	PARTIAL TELECOMMUNICATIONS SITE PLAN	W06_TS103.DGN
TS104	PARTIAL TELECOMMUNICATIONS SITE PLAN	W06_TS104.DGN
TS105	PARTIAL TELECOMMUNICATIONS SITE PLAN	W06_TS105.DGN
TS106	PARTIAL TELECOMMUNICATIONS SITE PLAN	W06_TS106.DGN
TS107	PARTIAL TELECOMMUNICATIONS SITE PLAN	W06_TS107.DGN
TS108	PARTIAL TELECOMMUNICATIONS SITE PLAN	W06_TS108.DGN
T-501	TELECOMMUNICATIONS MANHOLE DETAILS	W06_T-501.DGN
T-502	COMMUNICATIONS DUCT BANK DETAILS	W06_T-502.DGN
T-601	TELECOMMUNICATIONS SITE DISTRIBUTION ONE-LINE DIAGRAM	W06_T-601.DGN
T-602	ALARM SYSTEM ONE-LINE DIAGRAM	W06_T-602.DGN
	FACILITY DRAWINGS	
	FUEL STORAGE AND VEHICLE REFUELING POINT	
VRP_G-001	COVER SHEET SEE THE FACILITY COVER SHEET FOR COMPLETE DRAWING INDEX	W06_VRP_G-001.DGN
	NATIONAL POLICE COMMAND CENTER	
NPC_GI001	COVER SHEET SEE THE FACILITY GENERAL SHEETS FOR COMPLETE DRAWING INDEX	W06_NPC_GI001.dgn
	NPCC GATE HOUSE	
NGT_G-001	COVER SHEET SEE THE FACILITY COVER SHEET FOR COMPLETE DRAWING INDEX	W06_NGT_G-001.DGN
	EMERGENCY GENERATOR CANOPY FOR NPCC BUILDING	
EG2_G1	COVER SHEET SEE THE FACILITY COVER SHEET FOR COMPLETE DRAWING INDEX	W06_EG2_G1.DGN
	INTERVIEW BUILDING	
INT_GI001	COVER SHEET SEE THE FACILITY GENERAL SHEETS FOR COMPLETE DRAWING INDEX	W06_INT_GI001.DGN
	ADMINISTRATION BUILDING	
ADM_G-000	COVER SHEET SEE THE FACILITY COVER SHEET FOR COMPLETE DRAWING INDEX	W06_ADM_G-000.DGN
	ADMIN TRAINING COMPANY	
ATC_G-001	COVER SHEET SEE THE FACILITY COVER SHEET FOR COMPLETE DRAWING INDEX	W06_ATC_G-001.DGN
	AUDITORIUM BUILDING	
AUD_GI000	COVER SHEET SEE THE FACILITY COVER SHEET FOR COMPLETE DRAWING INDEX	W06_AUD_GI000.DGN

US Army Corps of Engineers
Kansas City District

SYM	DESCRIPTION	DATE	APPD

Designed by: J. BUSHIE
Date: DECEMBER 2011
Drawn by: S. CLINE
Drawing code: F-141-85-01
Checked by: C. DAVIS
Plot scale: 1:1
Submitted by: S. SIVAKUMAR
CADD File Name: W06_GI002.DGN

U.S. ARMY ENGINEER DISTRICT
CORPS OF ENGINEERS
KANSAS CITY, MISSOURI

KABUL, AFGHANISTAN
MINISTRY OF INTERIOR COMPLEX
NATIONAL POLICE COMMAND CENTER
FY2011

INDEX

SHEET NUMBER
GI002

K:\MissionProjects\mil\AED\w06_FY11_MOIHQ_NPCC\6.0 Engineering & Design\6.1 CADD Drawings\Con_Docs\CAD_Sheets\General\W06_GI002.dgn
1/10/2012 3:21:33 PM

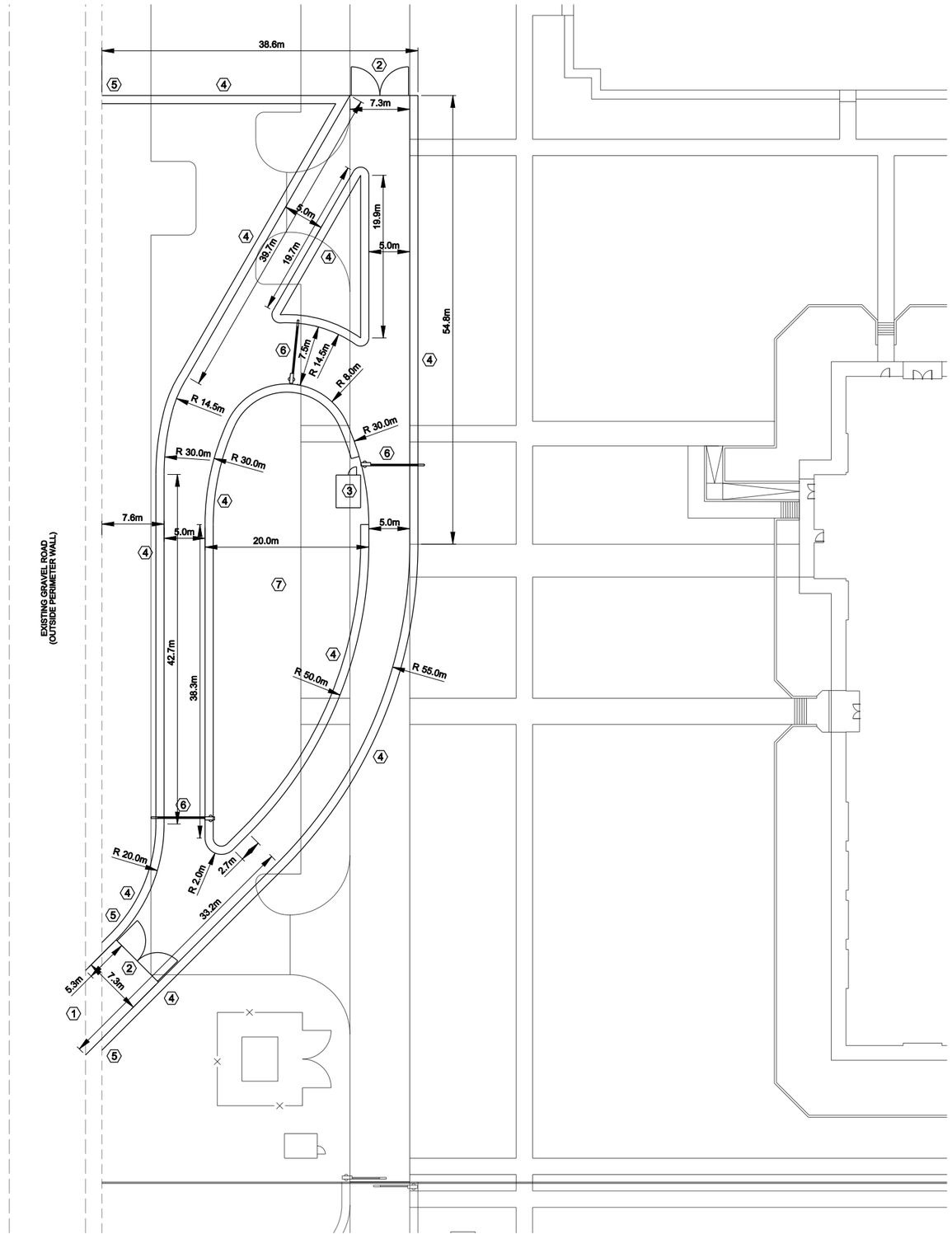

SHEET NOTES:

1. CONTRACTOR SHALL REMOVE APPROXIMATELY 11m OF EXISTING STONE PERIMETER WALL TO ACCOMMODATE THE OPENING TO THE TEMPORARY ENTRY CONTROL POINT.
2. PLACE A STEEL, OUTWARD SWINGING, GATE (FE7-2.4-DO-HO-7.3), WITH SNIPER SCREENING, PER DETAIL ON SHEET CS502.
3. THE CONTRACTOR SHALL PROVIDE A TEMPORARY GUARD SHACK. THE TEMPORARY STRUCTURE MUST BE APPROVED BY THE COR PRIOR TO INSTALLATION AND DOES NOT NEED TO MEET THE STANDARD DRAWINGS INCLUDED IN THIS SUBMITTAL.
4. INSTALL HESCO OR ALASKA BARRIERS (3m HEIGHT MIN.) PER THE DIMENSIONS SHOWN. THE INTERIOR BARRIERS MUST BE INSTALLED AND FINALIZED PRIOR TO BREACHING THE EXISTING PERIMETER WALL.
5. HESCO BARRIERS MUST TIGHTLY ABUT UP TO THE EXISTING STONE PERIMETER WALL.
6. PROVIDE A DROP ARM BARRIER PER THE DETAILS INCLUDED IN THESE DRAWINGS.
7. THE ENTIRE TEMPORARY ECP AREA SHALL BE PAVED WITH AGGREGATE PAVEMENT.

NOTES:

1. THE TEMPORARY ECP MUST BE CONSTRUCTED IMMEDIATELY ONCE THE CONTRACTOR MOBILIZES TO THE SITE. UPON COMPLETION OF CONSTRUCTION OF THE EASTERN ECPs (N.I.C.), THE CONTRACTOR MUST REMOVE THE TEMPORARY ECP AND COMPLETE THE REMAINDER OF THE CONSTRUCTION PROPOSED WITH THESE CONSTRUCTION DRAWINGS.

0 3m 6m 9m 12m 18m 24m

SCALE: 1:300

US Army Corps of Engineers
Kansas City District

SYM	DESCRIPTION	DATE	APPR

Date: DECEMBER 2011
Drawing code: F-141-35-01
Plot scale: 1:300
CADD File Name: W06_CS301.DGN

Designed by: S. MENSING
Drawn by: S. MENSING
Checked by: J. MEWMAW
Submitted by: M. CORGILL

U.S. ARMY ENGINEER DISTRICT
CORPS OF ENGINEERS
KANSAS CITY, MISSOURI

KABUL, AFGHANISTAN
MINISTRY OF INTERIOR COMPLEX
NATIONAL POLICE COMMAND CENTER
FY2011

SITE PLAN
TEMPORARY ENTRY CONTROL POINT

SHEET NUMBER
CS301

K:\MissionProjects\mil\AED\w06_FY11_MOIHQ_NPCC\6.0 Engineering & Design\6.1 CADD Drawings\Con_Docs\CAD_Sheets\Civil\W06_CS301.dgn 1/10/2012 3:20:12 PM

ROOFTOP HEAT PUMP UNIT SCHEDULE

AHU MODULES			SUPPLY FAN DATA							POWER DATA			COOLING COIL DATA									HEATING DATA				FILTER DATA				
GENERAL INFORMATION							MOTOR DATA																							
TAG	TYPE	AREA SERVED (THERMOSTAT LOCATION)	MAXIMUM AIR FLOW RATE (L/s)	MINIMUM O.A. AIR FLOW RATE (L/S)	EXTERNAL TOTAL P-DROP (pa)	TYPE	MIN HP	VOLT	PHASE	CONDENSING UNIT POWER (MCA)	OCPD (AMPS)	NOMINAL SIZE (TON)	COIL SELECTION AIRFLOWRATE (L/s)	MINIMUM SENSIBLE CAPACITY (Watts)	MINIMUM TOTAL CAPACITY (Watts)	MAXIMUM SENSIBLE HEAT RATIO	E.A.T. DB (°C)	E.A.T. WB (°C)	L.A.T. DB (°C)	L.A.T. WB (°C)	MAXIMUM WET AIR P-DROP (pa)	UNIT HEATING CAPACITY @-8°C (Watts)	ELECTRIC HEAT COIL CAPACITY (Watts)	E.A.T. DB (°C)	L.A.T. DB (°C)	TYPE	MAXIMUM FILTER FACE VEL. (m/s)	CLEAN P-DROP (Pa)	FINAL MAXIMUM P-DROP (Pa)	NOTES
RTU-101	HEAT PUMP	RM 114	808	61	155	SUPPLY	3	400	3	22	25	5	808	14,477	15,055	0.962	26.7	17.6	11.0	10.0	0.5	7,528	0	19.5	27.6	2" PLEATED	300	0.1	0.55	1 THRU 5
RTU-102	HEAT PUMP	RM 113	1,814	714	125	SUPPLY	3	400	3	32	35	10	1,814	31,102	33,796	0.920	26.7	17.6	11.0	10.0	0.5	16,898	0	19.5	27.6	2" PLEATED	300	0.1	0.55	1 THRU 5
RTU-103	HEAT PUMP	RM 114D	726	88	125	SUPPLY	3	400	3	22	25	5	726	13,116	13,521	0.970	26.7	17.6	11.0	10.0	0.5	6,761	901	19.5	27.6	2" PLEATED	300	0.1	0.55	1 THRU 5
RTU-104	HEAT PUMP	RM 146D	964	245	130	SUPPLY	3	400	3	22	25	5	964	17,054	17,962	0.949	26.7	17.6	11.0	10.0	0.5	8,981	0	19.5	27.6	2" PLEATED	300	0.1	0.55	1 THRU 5
RTU-105	HEAT PUMP	RM 146E	943	170	115	SUPPLY	3	400	3	22	25	5	943	16,040	17,575	0.913	26.7	17.6	11.0	10.0	0.5	8,788	0	19.5	27.6	2" PLEATED	300	0.1	0.55	1 THRU 5
RTU-106	HEAT PUMP	RM 124	1,792	259	155	SUPPLY	3	400	3	32	35	10	1,792	31,368	33,393	0.939	26.7	17.6	11.0	10.0	0.5	16,697	1,361	19.5	27.6	2" PLEATED	300	0.1	0.55	1 THRU 5
RTU-107	HEAT PUMP	RM 123	701	62	150	SUPPLY	3	400	3	22	25	5	701	12,490	13,068	0.956	26.7	17.6	11.0	10.0	0.5	6,534	2,163	19.5	27.6	2" PLEATED	300	0.1	0.55	1 THRU 5
RTU-108	HEAT PUMP	RM 122	857	70	120	SUPPLY	3	400	3	22	25	5	857	15,422	15,962	0.966	26.7	17.6	11.0	10.0	0.5	7,981	1,719	19.5	27.6	2" PLEATED	300	0.1	0.55	1 THRU 5
RTU-109	HEAT PUMP	RM 145	936	228	140	SUPPLY	3	400	3	22	25	5	936	11,915	17,443	0.683	26.7	17.6	11.0	10.0	0.5	8,722	0	19.5	27.6	2" PLEATED	300	0.1	0.55	1 THRU 5
RTU-110	HEAT PUMP	RM 139	840	204	145	SUPPLY	3	400	3	22	25	5	840	10,700	15,650	0.684	26.7	17.6	11.0	10.0	0.5	7,825	0	19.5	27.6	2" PLEATED	300	0.1	0.55	1 THRU 5
RTU-111	HEAT PUMP	RM 109	760	60	165	SUPPLY	3	400	3	22	25	5	760	10,857	14,157	0.767	26.7	17.6	11.0	10.0	0.5	7,079	0	19.5	27.6	2" PLEATED	300	0.1	0.55	1 THRU 5
RTU-112	HEAT PUMP	RM 128	1,844	360	250	SUPPLY	3	400	3	22	25	10	1,844	32,453	34,351	0.945	26.7	17.6	11.0	10.0	0.5	17,176	0	19.5	27.6	2" PLEATED	300	0.1	0.55	1 THRU 5
RTU-113	HEAT PUMP	RM 107	2,540	1,021	145	SUPPLY	3	400	3	32	35	10	2,540	35,120	47,330	0.742	26.7	17.6	11.0	10.0	0.5	23,665	13,796	19.5	27.6	2" PLEATED	300	0.1	0.55	1 THRU 5
RTU-114	HEAT PUMP	RM 131	653	90	125	SUPPLY	3	400	3	22	25	5	653	11,294	12,166	0.928	26.7	17.6	11.0	10.0	0.5	6,083	5,415	19.5	27.6	2" PLEATED	300	0.1	0.55	1 THRU 5
RTU-115	HEAT PUMP	RM 144	1,722	554	155	SUPPLY	3	400	3	22	25	10	1,722	27,135	32,087	0.846	26.7	17.6	11.0	10.0	0.5	16,044	0	19.5	27.6	2" PLEATED	300	0.1	0.55	1 THRU 5
RTU-116	HEAT PUMP	RM 130D	629	96	135	SUPPLY	3	400	3	22	25	5	629	11,111	11,711	0.949	26.7	17.6	11.0	10.0	0.5	5,856	4,063	19.5	27.6	2" PLEATED	300	0.1	0.55	1 THRU 5
RTU-117	HEAT PUMP	RM 130K	624	50	155	SUPPLY	3	400	3	22	25	5	624	11,276	11,628	0.970	26.7	17.6	11.0	10.0	0.5	5,814	2,558	19.5	27.6	2" PLEATED	300	0.1	0.55	1 THRU 5
RTU-118	HEAT PUMP	RM 110A	417	98	150	SUPPLY	3	400	3	22	25	5	417	6,619	7,768	0.852	26.7	17.6	11.0	10.0	0.5	3,884	0	19.5	27.6	2" PLEATED	300	0.1	0.55	1 THRU 5
RTU-201	HEAT PUMP	RM 216	765	66	75	SUPPLY	3	400	3	22	25	5	765	13,591	14,251	0.954	26.7	17.6	11.0	10.0	0.5	7,126	2,542	19.5	27.6	2" PLEATED	300	0.1	0.55	1 THRU 5
RTU-202	HEAT PUMP	RM 215	846	232	95	SUPPLY	3	400	3	22	25	5	846	13,541	15,769	0.859	26.7	17.6	11.0	10.0	0.5	7,885	1,317	19.5	27.6	2" PLEATED	300	0.1	0.55	1 THRU 5
RTU-203	HEAT PUMP	RM 217	970	86	80	SUPPLY	3	400	3	22	25	5	970	17,106	18,074	0.946	26.7	17.6	11.0	10.0	0.5	9,037	2,568	19.5	27.6	2" PLEATED	300	0.1	0.55	1 THRU 5
RTU-204	HEAT PUMP	RM 146	2,355	513	105	SUPPLY	3	400	3	32	35	10	2,355	32,733	43,871	0.746	26.7	17.6	11.0	10.0	0.5	21,936	0	19.5	27.6	2" PLEATED	300	0.1	0.55	1 THRU 5
RTU-205	HEAT PUMP	RM 210	996	216	90	SUPPLY	3	400	3	22	25	5	996	17,490	18,563	0.942	26.7	17.6	11.0	10.0	0.5	9,282	0	19.5	27.6	2" PLEATED	300	0.1	0.55	1 THRU 5
RTU-206	HEAT PUMP	RM 231	1,015	175	80	SUPPLY	3	400	3	22	25	5	1,015	17,519	18,907	0.927	26.7	17.6	11.0	10.0	0.5	9,454	3,170	19.5	27.6	2" PLEATED	300	0.1	0.55	1 THRU 5
RTU-207	HEAT PUMP	RM 229	783	71	75	SUPPLY	3	400	3	22	25	5	783	13,847	14,590	0.949	26.7	17.6	11.0	10.0	0.5	7,295	2,524	19.5	27.6	2" PLEATED	300	0.1	0.55	1 THRU 5
RTU-208	HEAT PUMP	RM 228	1,099	116	90	SUPPLY	3	400	3	26	30	5	1,099	19,571	20,479	0.956	26.7	17.6	11.0	10.0	0.5	10,240	4,584	19.5	27.6	2" PLEATED	300	0.1	0.55	1 THRU 5
RTU-209	HEAT PUMP	RM 207	1,064	89	80	SUPPLY	3	400	3	22	25	5	1,064	19,083	19,826	0.963	26.7	17.6	11.0	10.0	0.5	9,913	2,469	19.5	27.6	2" PLEATED	300	0.1	0.55	1 THRU 5
RTU-210	HEAT PUMP	RM 205	980	136	90	SUPPLY	3	400	3	22	25	5	980	17,325	18,263	0.949	26.7	17.6	11.0	10.0	0.5	9,132	4,850	19.5	27.6	2" PLEATED	300	0.1	0.55	1 THRU 5
RTU-211	HEAT PUMP	RM 242A	1,238	366	90	SUPPLY	3	400	3	22	25	5	1,238	21,247	23,062	0.921	26.7	17.6	11.0	10.0	0.5	11,531	5,278	19.5	27.6	2" PLEATED	300	0.1	0.55	1 THRU 5
RTU-212	HEAT PUMP	RM 242G	815	80	75	SUPPLY	3	400	3	26	30	5	815	14,118	15,192	0.929	26.7	17.6	11.0	10.0	0.5	7,596	3,557	19.5	27.6	2" PLEATED	300	0.1	0.55	1 THRU 5
RTU-213	HEAT PUMP	RM 240A	662	62	75	SUPPLY	3	400	3	26	30	5	662	11,890	12,325	0.965	26.7	17.6	11.0	10.0	0.5	6,163	3,765	19.5	27.6	2" PLEATED	300	0.1	0.55	1 THRU 5
RTU-214	HEAT PUMP	RM 239	2,083	238	130	SUPPLY	3	400	3	32	35	10	2,083	36,660	38,805	0.945	26.7	17.6	11.0	10.0	0.5	19,403	0	19.5	27.6	2" PLEATED	300	0.1	0.55	1 THRU 5
RTU-215	HEAT PUMP	RM 254	947	208	80	SUPPLY	3	400	3	22	25	5	947	12,121	17,649	0.687	26.7	17.6	11.0	10.0	0.5	8,825	0	19.5	27.6	2" PLEATED	300	0.1	0.55	1 THRU 5
RTU-216	HEAT PUMP	RM 249	825	191	80	SUPPLY	3	400	3	22	25	5	825	10,585	15,370	0.689	26.7	17.6	11.0	10.0	0.5	7,685	0	19.5	27.6	2" PLEATED	300	0.1	0.55	1 THRU 5
RTU-217	HEAT PUMP	RM 220	2,049	369	110	SUPPLY	3	400	3	32	35	10	2,049	32,892	38,172	0.862	26.7	17.6	11.0	10.0	0.5	19,086	0	19.5	27.6	2" PLEATED	300	0.1	0.55	1 THRU 5

NOTES:
1. UNIT EXTERNAL TOTAL PRESSURE (STATIC + VELOCITY) DOES NOT INCLUDE ANY RESISTANCE FOR UNIT COILS, FILTERS UNIT CASING AND UNIT DAMPERS. CONTRACTOR SHALL ADD VALUES FROM ACTUAL EQUIPMENT SELECTED TO DETERMINE UNIT TOTAL PRESSURE REQUIREMENTS (USE 0.55" MIN FOR DIRTY FILTERS). FAN EXTERNAL STATIC PRESSURE IS DETERMINED BY SUBTRACTING SELECTED FAN OUTLET VELOCITY PRESSURE FROM CALCULATED UNIT TOTAL.
2. ALL UNITS SHALL OPERATE AS HEAT PUMPS DURING THE HEATING SEASON. PROVIDE EACH UNIT WITH A HEAT PUMP THERMOSTAT.
3. UNITS RTU-101 THROUGH RTU-111 AND RTU-201 THROUGH RTU-205 SHALL BE PROVIDED WITH EMERGENCY POWER. SEE ELECTRICAL.
4. PROVIDE FACTORY MOUNTED INTEGRAL AUTOMATIC STARTER AND
5. PROVIDE SINGLE-POINT CONNECTION WITH OVERCURRENT PROTECTION.

ELECTRIC CABINET UNIT HEATER SCHEDULE

TAG	AREA SERVED	NOMINAL AIRFLOW (LPS)	CABINET LENGTH (M)	ELECTRICAL DATA				NOTES
				WATTS	VOLT	PHASE	HERTZ	
EH-1	STAIRS 196	120	0.71	2,000	230	1	50	1 - 5
EH-2	STAIRS 197	120	0.71	2,000	230	1	50	1 - 5
EH-3	STAIRS 198	120	0.71	2,000	230	1	50	1 - 5
EH-4	STAIRS 199	120	0.71	2,000	230	1	50	1 - 5
EH-5 THRU EH-7	MECHANICAL 111	120	0.71	4,000	230	1	50	1 - 5
EH-8	ELECTRICAL 125	120	0.71	1,000	230	1	50	1 - 5
EH-9	MECHANICAL 212	120	0.71	2,000	230	1	50	1 - 5
EH-10	MECHANICAL 227C	120	0.71	1,000	230	1	50	1 - 5
EH-11	ELECTRICAL 235	120	0.71	1,000	230	1	50	1 - 5
EH-12	PRIVATE RR 109F	120	0.71	1,000	230	1	50	1 - 5
EH-13	PRIVATE RR 122C	120	0.71	1,000	230	1	50	1 - 5
EH-14 THRU EH-16	KITCHEN/DISHWASH	120	0.71	3,000	230	1	50	1 - 5
EH-17	SHOWER 105	120	0.71	2,000	230	1	50	1 - 5

NOTES:
1. WALL MOUNTED WITH HORIZONTAL DISCHARGE AIRFLOW. FOLLOW MANUFACTURER'S INSTRUCTIONS FOR MOUNTING INSTALLATION.
2. PROVIDE DISCONNECT SWITCH FOR POSITIVE POWER INTERRUPTION.
3. PROVIDE HIGH/LOW CONTROL SWITCH FOR HEAT/FAN.
4. PROVIDE WITH INTERNAL THERMOSTAT.
5. BASIS OF DESIGN: REZNOR EMC ELECTRIC CABINET HEATER (FAN FORCED).

EXHAUST & VENTILATION FAN SCHEDULE

TAG	FUNCTION	AREA SERVED	FAN DATA				MOTOR DATA				NOTES
			TYPE	FLOW, LPS	APPROX FAN RPM	S.P., INCHES H2O	MAX SONES	MIN HP	VOLT	PHASE	
EF-1 THRU EF-3	EXHAUST	KITCHEN HOOD EXHAUST	UPBLAST	1,490	1010	0.5	30	3/4	220	1	
EF-4 THRU EF-6	MAKE-UP	KITCHEN HOOD SUPPLY	INLINE	1,190	1140	0.5	10	1/2	220	1	
EF-7 THRU EF-8	EXHAUST	GRILL HOOD EXHAUST	UPBLAST	745	1137	0.5	30	1/4	220	1	
EF-9 THRU EF-10	EXHAUST	GRILL HOOD SUPPLY	INLINE	600	1140	0.5	10	1/3	220	1	
EF-11	EXHAUST	NORTH RESTROOM GROUP	UPBLAST	600	1410	0.375	30	1/4	220	1	
EF-12	EXHAUST	SOUTH RESTROOM GROUP	UPBLAST	445	1137	0.375	30	1/4	220	1	
EF-13	EXHAUST	TRASH HOLDING	INLINE	100	1050	0.1	10	1/40	220	1	
EF-14	EXHAUST	ELECTRIC 125	INLINE	100	1050	0.1	30	1/40	220	1	
EF-15	EXHAUST	ELECTRIC 235	INLINE	100	1050	0.1	30	1/40	220	1	

US Army Corps of Engineers
Kansas City District

SYM	DESCRIPTION	DATE	APPR

Designed by: M. LITTLE
Date: DECEMBER 2011
Drawn by: L. WARD
Drawing code: F-141-85-01
Checked by: J. WILKUS
Plot scale: 1:1
Submitted by: S. BURNS
CADD File Name: w05_NPC_M-601.dgn

U.S. ARMY ENGINEER DISTRICT
CORPS OF ENGINEERS
KANSAS CITY, MISSOURI

KABUL, AFGHANISTAN
MINISTRY OF INTERIOR COMPLEX
NATIONAL POLICE COMMAND CENTER
FY2011

NPCC
HVAC SCHEDULES

SHEET NUMBER
NPC
M-601

$TIME$
$DATE$
$FILEL$

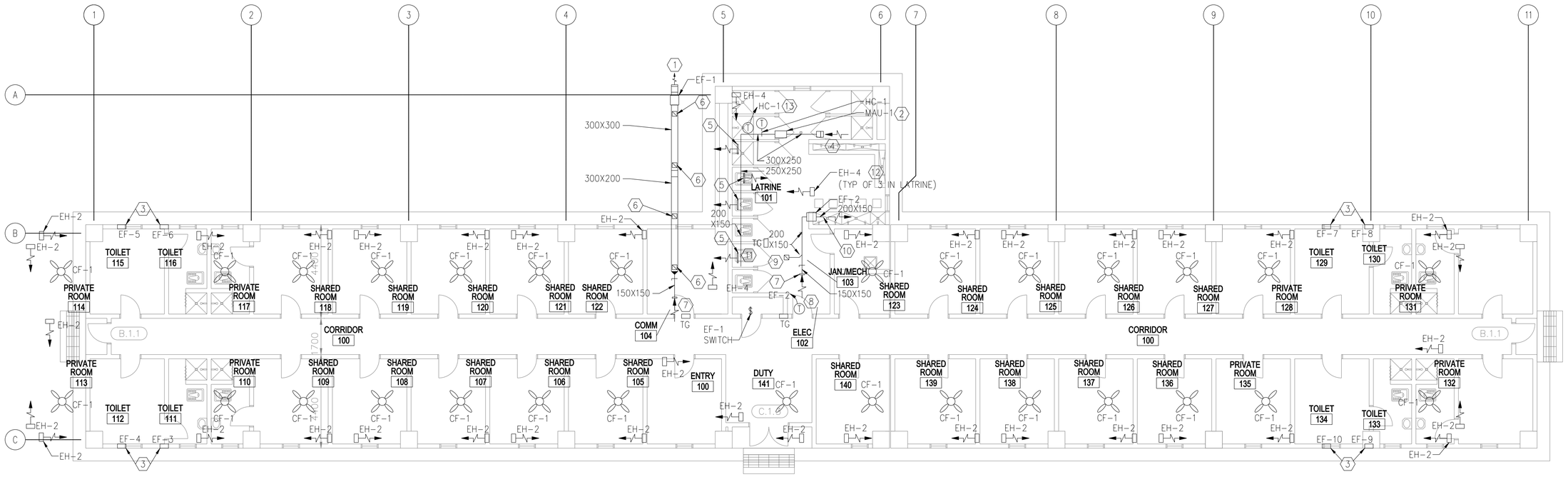

HVAC PLAN

SCALE: 1:100

GENERAL NOTES:

1. DO NOT SCALE DRAWINGS – ALL DIMENSIONS AND CONDITIONS SHALL BE CHECKED AND VERIFIED BY THE CONTRACTOR AT THE SITE.
2. ALL WORK PERFORMED ON THIS BUILDING SHALL BE IN COMPLIANCE WITH ALL PERTINENT CODES, RULES, ORDINANCES AND REGULATIONS OF THE GOVERNING AUTHORITIES.
3. ALL WORK PERFORMED UNDER AND IN CONNECTION WITH THESE DRAWINGS AND SPECIFICATIONS SHALL BE IN STRICT COMPLIANCE WITH THE LATEST SAFETY AND HEALTH STANDARDS.
4. UNIT HEATERS SHALL BE CONTROLLED BY UNIT MOUNTED THERMOSTATS.
5. DESIGN CONDITIONS:
   OUTDOORS:
   SUMMER: 35°C (95°F) DRY BULB AND 20.6°C (69°F) WET BULB
   WINTER: –12.8°C (9°F)
   INDOORS:
   SUMMER: 24°C (75°F) AND 50% RH
   WINTER: 20°C (68°F)

KEY NOTE:

1. INLINE EXHAUST FAN DUCTED TO WALL CAP WITH LOW LEAKAGE GRAVITY BACK–DRAFT DAMPER. SECURE FAN TO STRUCTURE ABOVE AND INTERLOCK WITH MAKE UP AIR HEATER.
2. ELECTRIC MAKE UP AIR HEATER SECURED TO STRUCTURE ABOVE. BLOWER SHALL BE SET TO ENERGIZE WITH EXHAUST FAN EF–1.
3. WALL EXHAUST FAN WITH SPRING OPERATED BACK–DRAFT DAMPER. SEE DETAIL 3 SHEET M–501.
4. 600X600 (24X24) INTAKE LOUVER FOR MAKE UP AIR UNIT. PROVIDE WEATHER PROOF LOUVER WITH 50mm (2") WASHABLE FILTER AND SAND TRAP.
5. 200x150 (8x6) ALUMINUM DUCT MOUNTED SUPPLY GRILLE WITH ADJUSTABLE OPPOSED BLADE DAMPERS. BALANCE EACH GRILLE TO 0.070 CMS.
6. 150x150 (6x6) ALUMINUM DUCT MOUNTED EXHAUST GRILLE WITH ADJUSTABLE OPPOSED BLADE DAMPERS. BALANCE EACH GRILLE TO 0.075 CMS.
7. 150x150 (6x6) ALUMINUM WALL MOUNTED EXHAUST GRILLE WITH ADJUSTABLE OPPOSED BLADE DAMPERS. BALANCE GRILLE TO 0.030 CMS.
8. THERMOSTAT MOUNTED AS HIGH AS POSSIBLE. INTERLOCK STAT WITH CORRESPONDING EXHAUST FAN, SET FAN TO ENERGIZE ON RISE IN TEMPERATURE ABOVE 25°C (77°F).
9. 150x150 (6x6) ALUMINUM DUCT MOUNTED EXHAUST GRILLE WITH ADJUSTABLE OPPOSED BLADE DAMPERS. BALANCE GRILLE TO 0.030 CMS.
10. INLINE EXHAUST FAN DUCTED TO WALL CAP WITH LOW LEAKAGE GRAVITY BACK–DRAFT DAMPER. SECURE FAN TO STRUCTURE ABOVE.
11. THERMOSTAT MOUNTED AS HIGH AS POSSIBLE. INTERLOCK STAT WITH CORRESPONDING UNIT HEATER, SET FAN TO ENERGIZE ON DROP IN TEMPERATURE BELOW 20°C (68°F).
12. SET UNIT HEATERS TO ENERGIZE ON DROP IN TEMPERATURE BELOW 20%% D (68°F).
13. THERMOSTAT SHALL CONTROL HC–1 TO MAINTAIN SPACE TEMPERATURES. THERMOSTAT SHALL BE MOUNTED ON WALL.

SYMBOLS:

(X)	KEY NOTE
(0.050)	AIR VOLUME IN CUBIC METERS PER SECOND (CMS)
UC	DOOR UNDERCUT
TG	200x400 (8x16) TRANSFER GRILLE
$	SINGLE POLE SWITCH – 20A RATED

ABBREVIATIONS:

AFF	ABOVE FINISH FLOOR
CF	CEILING FANS
CMS	CUBIC METERS PER SECOND
EC	ELECTRICAL CONTRACTOR
EH	ELECTRIC UNIT HEATER
EF	EXHAUST FAN
HC	ELECTRIC HEATING COIL
MAU	MAKE UP AIR UNIT
STATS	THERMOSTATS

0 1000 2000 3000 4000 6000 8000mm

SCALE: 1:100

US Army Corps of Engineers
Kansas City District

SYM	DESCRIPTION	DATE	APPR.

Date: DECEMBER 2011
Drawing code: F-141-35-01
Plot scale: 1:100
CADD File Name: w05_OBK_M-101.dgn

Designed by: USACE
Drawn by: USACE
Checked by: USACE
Submitted by: USACE

U.S. ARMY ENGINEER DISTRICT
CORPS OF ENGINEERS
KANSAS CITY, MISSOURI

KABUL, AFGHANISTAN
MINISTRY OF INTERIOR COMPLEX
NATIONAL POLICE COMMAND CENTER
FY2011

OFFICER BARRACKS
HVAC PLAN

SHEET NUMBER
OBK
M-101

$TIME$
$DATE$
$FILEL$

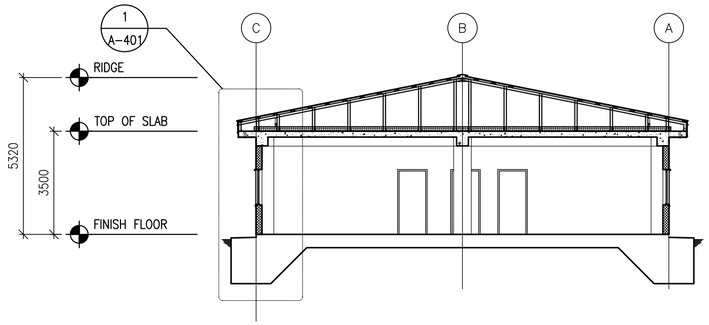

1 A-301 BUILDING SECTION

SCALE: 1:100

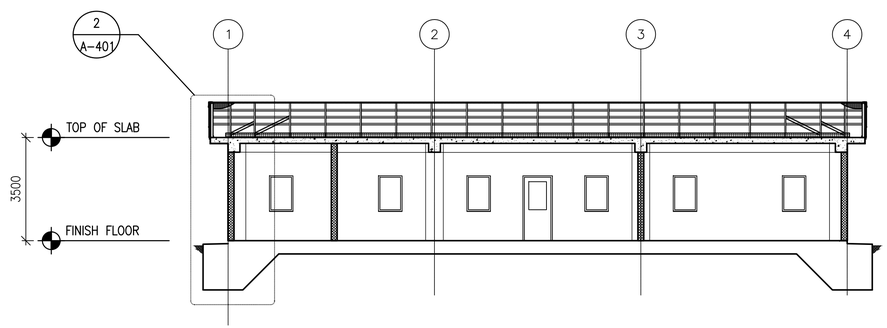

2 A-301 BUILDING SECTION

SCALE: 1:100

0 1000 2000 3000 4000 6000 8000mm

SCALE: 1:100

UNLESS OTHERWISE NOTED, LINEAR DIMENSIONS SHOWN ON DRAWINGS ARE IN MILLIMETERS (mm)

US Army Corps of Engineers
Kansas City District

SYM	DESCRIPTION	DATE	APPR
	ORIGINAL DESIGN BY BAKER. FOUNDATION REDESIGNED BY B&V	8/22/11	
	REVISED TO DEPICT MAT FOUNDATION BY B&V	8/22/11	

Designed by: C. LEATON
Drawn by: R. RUBIN
Checked by: M. BREKKEN
Submitted by: D. STORM
Date: 11/29/ 2011
Drawing code: F-141-85-01
Plot scale: 1:1
CADD File Name: w05_ATC_A301

U.S. ARMY ENGINEER DISTRICT
CORPS OF ENGINEERS
KANSAS CITY, MISSOURI

BLACK & VEATCH
building a world of difference.

KABUL, AFGHANISTAN
MINISTRY OF INTERIOR COMPLEX
NATIONAL POLICE COMMAND CENTER
FY2011

ADMIN TRAINING COMPANY
BUILDING SECTIONS

SHEET NUMBER
ATC
A-301

$TIME$
$DATE$
$FILEL$

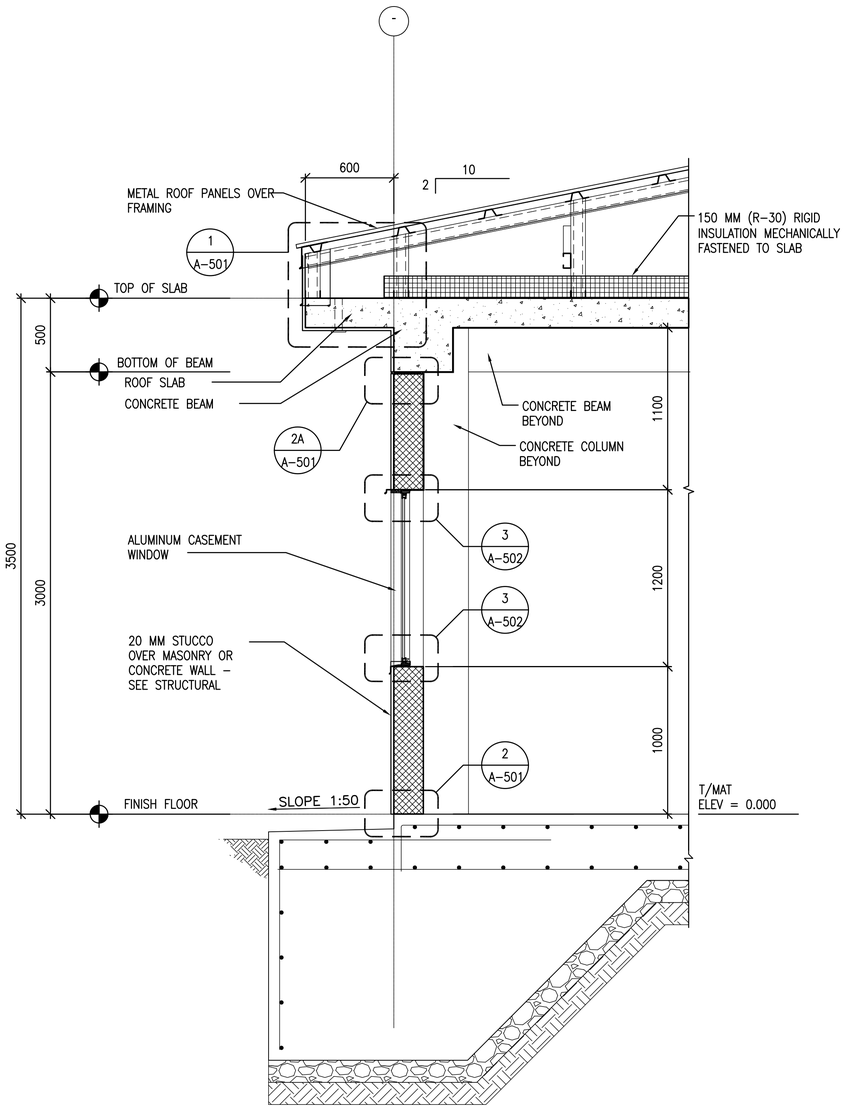

1 A-401 TYPICAL WALL SECTION

SCALE: 1:20

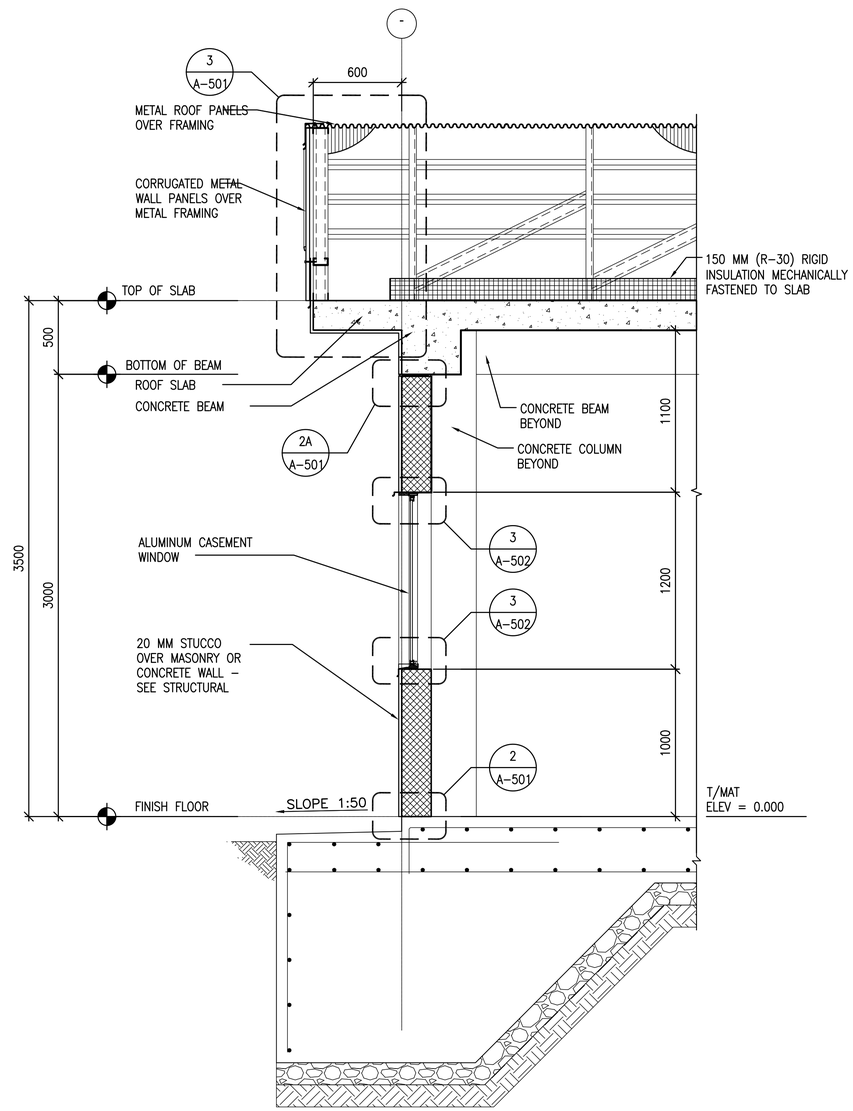

2 A-401 TYPICAL (GABLE) WALL SECTION

SCALE: 1:20

0 200 400 600 800 1200 1600mm

SCALE: 1:20

UNLESS OTHERWISE NOTED, LINEAR DIMENSIONS SHOWN ON DRAWINGS ARE IN MILLIMETERS (mm)

US Army Corps of Engineers
Kansas City District

SYM	DESCRIPTION	DATE	APPR
	ORIGINAL DESIGN BY BAKER, FOUNDATION REDESIGNED BY B&V	8/22/11	
	REVISED TO DEPICT MAT FOUNDATION BY B&V	8/22/11	

Date: 11/29/ 2011
Drawing code: F-141-85-01
Plot scale: 1:1
CADD File Name: w05_ATC_A401

Designed by: C. LEATON
Drawn by: R. RUBIN
Checked by: M. BREKKEN
Submitted by: D. STORM

U.S. ARMY ENGINEER DISTRICT CORPS OF ENGINEERS KANSAS CITY, MISSOURI

BLACK & VEATCH building a world of difference.

KABUL, AFGHANISTAN
MINISTRY OF INTERIOR COMPLEX
NATIONAL POLICE COMMAND CENTER
FY2011

ADMIN TRAINING COMPANY
ENLARGED TOILET PLANS

SHEET NUMBER
ATC
A-401

$TIME$
$DATE$
$FILEL$

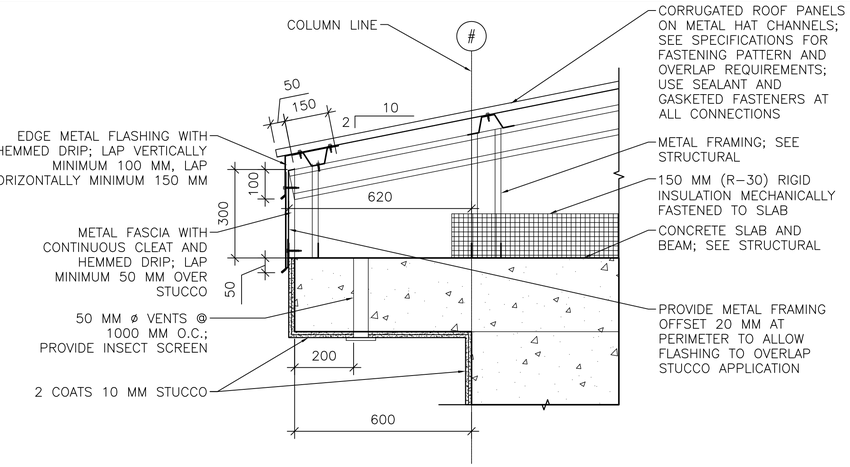

1 / A–501 EAVE DETAIL
SCALE 1:10

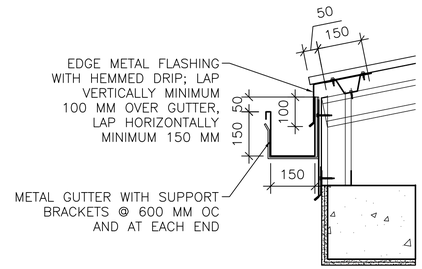

1A / A–501 GUTTER DETAIL
SCALE 1:10

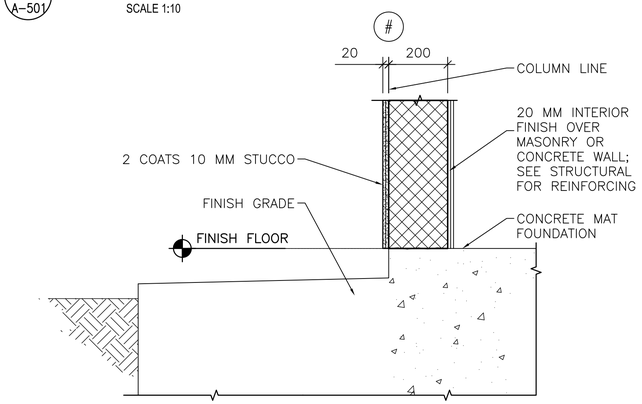

2 / A–501 STUCCO BASE DETAIL
SCALE 1:10

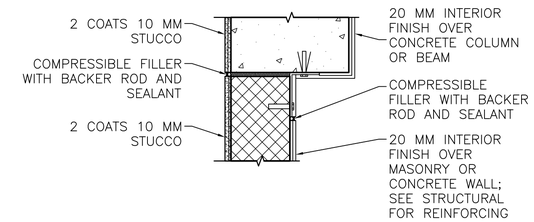

NOTE: DETAIL TYPICAL AT ALL WALL/COLUMN AND WALL/BEAM LOCATIONS, SEE ALTERNATE BRACING DETAIL BELOW 2B/A–501.

2A / A–501 STUCCO JOINT DETAIL
SCALE 1:10

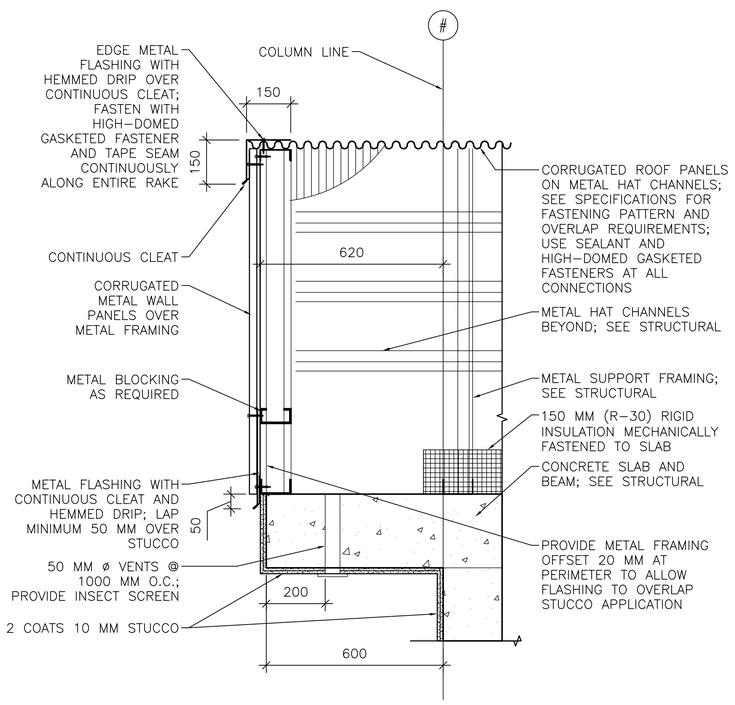

3 / A–501 RAKE/EAVE DETAIL
SCALE 1:10

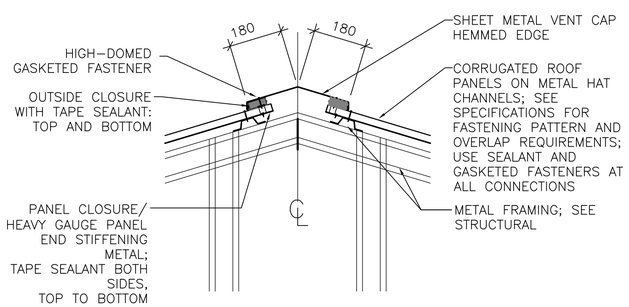

4 / A–501 RIDGE VENT DETAIL
SCALE 1:10

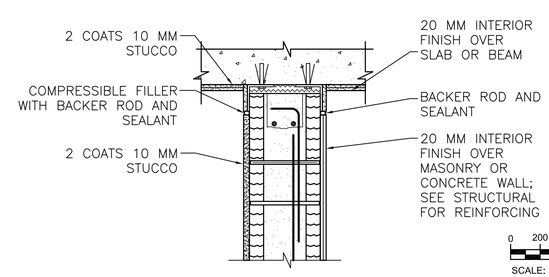

INTERIOR WALL/BEAM

2B / A–501 ALTERNATE BRACING DETAIL
SCALE 1:10

0 200 400 600 800 1200 1600mm
SCALE: 1:20

0 100 200 300 400 600 800mm
SCALE: 1:10

0 50 100 150 200 300 400mm
SCALE: 1:5

UNLESS OTHERWISE NOTED, LINEAR DIMENSIONS SHOWN ON DRAWINGS ARE IN MILLIMETERS (mm)

US Army Corps of Engineers
Kansas City District

SYM	DESCRIPTION	DATE	APPR
	ORIGINAL DESIGN BY BAKER. FOUNDATION REDESIGNED BY B&V	8/22/11	
	REVISED TO DEPICT MAT FOUNDATION BY B&V	8/22/11	

Date: 11/29/ 2011
Drawing code: F-141-85-01
Plot scale: 1:1
CADD File Name: w05_ATC_A501

Designed by: C. LEATON
Drawn by: R. RUBIN
Checked by: M. BREKKEN
Submitted by: D. STORM

U.S. ARMY ENGINEER DISTRICT
CORPS OF ENGINEERS
KANSAS CITY, MISSOURI

BLACK & VEATCH
building a world of difference.™

KABUL, AFGHANISTAN
MINISTRY OF INTERIOR COMPLEX
NATIONAL POLICE COMMAND CENTER
FY2011

ADMIN TRAINING COMPANY
EXTERIOR DETAILS

SHEET NUMBER
ATC
A-501

$TIME$
$DATE$
$FILEL$

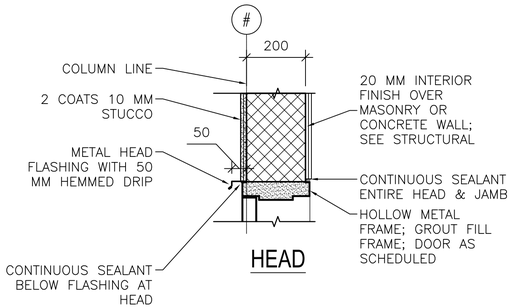

HEAD

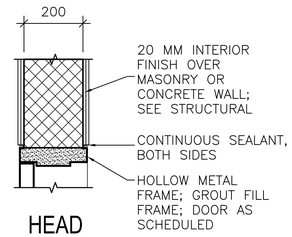

HEAD

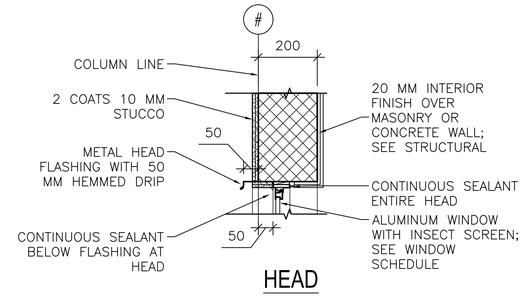

HEAD

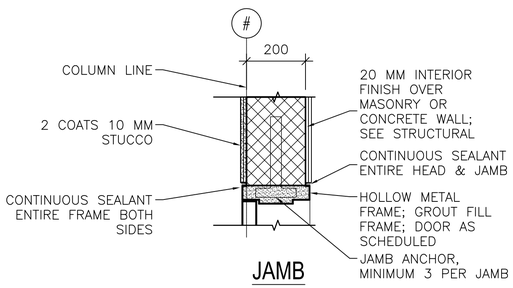

JAMB

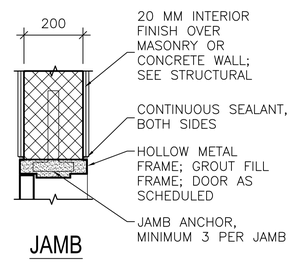

JAMB

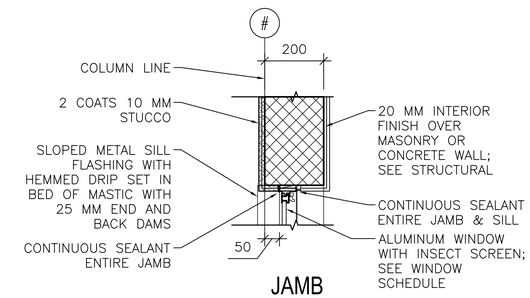

JAMB

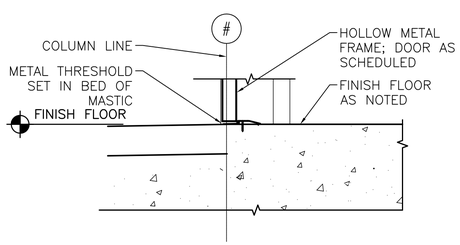

THRESHOLD

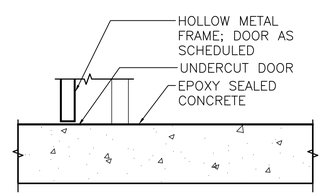

THRESHOLD

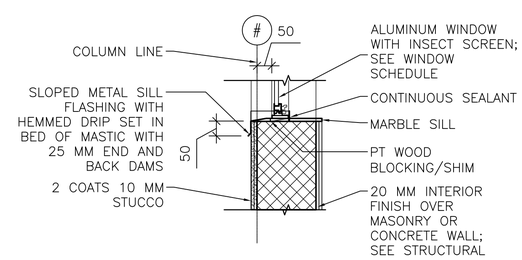

SILL

1 A-502 EXTERIOR DOOR DETAILS

SCALE: 1:10

2 A-502 INTERIOR DOOR DETAILS

SCALE: 1:10

3 A-502 EXTERIOR WINDOW DETAILS

SCALE: 1:10

0 100 200 300 400 600 800mm

SCALE: 1:10

UNLESS OTHERWISE NOTED, LINEAR DIMENSIONS SHOWN ON DRAWINGS ARE IN MILLIMETERS (mm)

US Army Corps of Engineers
Kansas City District

SYM	DESCRIPTION	DATE	APPR
	ORIGINAL DESIGN BY BAKER. FOUNDATION REDESIGNED BY B&V	8/22/11	
	REVISED TO DEPICT MAT FOUNDATION BY B&V	8/22/11	

Designed by: C. LEATON
Drawn by: R. RUBIN
Checked by: M. BREEKEN
Submitted by: D. STORM
Date: 11/29/ 2011
Drawing code: F-141-85-01
Plot scale: 1:1
CADD File Name: w05_ATC_A501

U.S. ARMY ENGINEER DISTRICT
CORPS OF ENGINEERS
KANSAS CITY, MISSOURI

BLACK & VEATCH
building a world of difference.

KABUL, AFGHANISTAN
MINISTRY OF INTERIOR COMPLEX
NATIONAL POLICE COMMAND CENTER
FY2011

ADMIN TRAINING COMPANY
HEAD, JAMB AND SILL DETAILS

SHEET NUMBER
ATC
A-502

$TIME$
$DATE$
$FILEL$

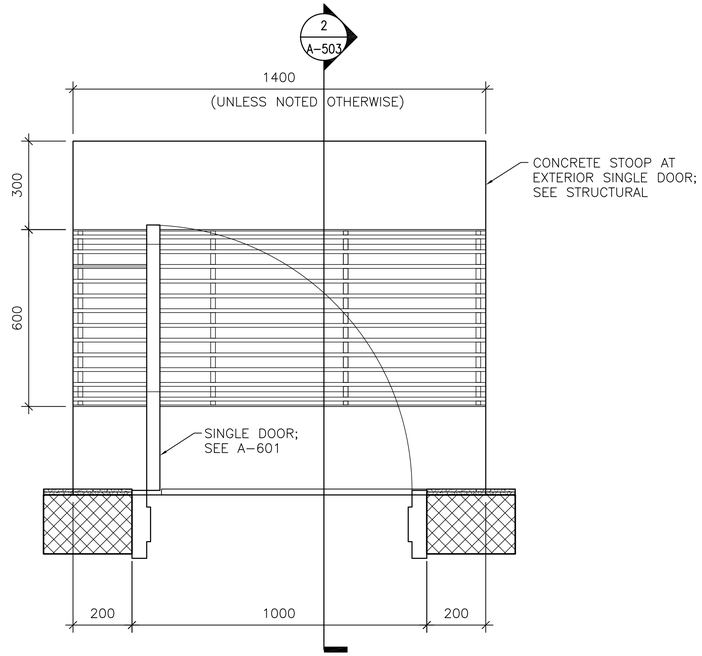

1 A-503 DOOR STOOP PLAN (WITH GRATE)

SCALE: 1:10

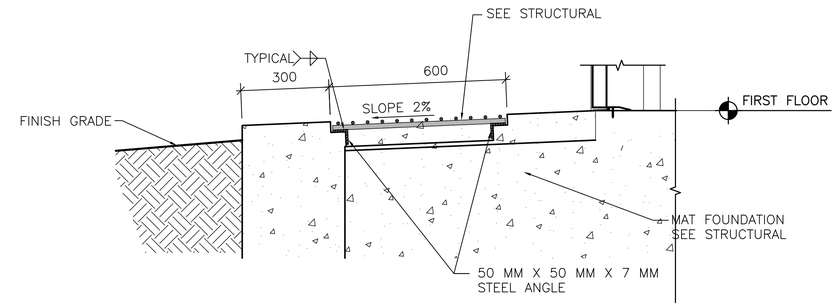

2 A-503 DOOR STOOP DETAIL

SCALE: 1:10

0 100 200 300 400 600 800mm

SCALE: 1:10

UNLESS OTHERWISE NOTED, LINEAR DIMENSIONS SHOWN ON DRAWINGS ARE IN MILLIMETERS (mm)

US Army Corps of Engineers
Kansas City District

SYM	DESCRIPTION	DATE	APPR
	ORIGINAL DESIGN BY BAKER, FOUNDATION REDESIGNED BY B&V	8/22/11	
	REVISED TO DEPICT MAT FOUNDATION BY B&V	8/22/11	

Designed by: C. LEATON
Date: 11/29/ 2011
Drawn by: R. RUBIN
Drawing code: F-141-85-01
Checked by: M. BREKKEN
Plot scale: 1:1
Submitted by: D. STORM
CADD File Name: w05_ATC_A501

U.S. ARMY ENGINEER DISTRICT
CORPS OF ENGINEERS
KANSAS CITY, MISSOURI

BLACK & VEATCH
building a world of difference.™

KABUL, AFGHANISTAN
MINISTRY OF INTERIOR COMPLEX
NATIONAL POLICE COMMAND CENTER
FY2011

ADMIN TRAINING COMPANY
ARCHITECTURAL
STOOP DETAILS

SHEET NUMBER
ATC
A-503

$TIME$
$DATE$
$FILEL$