Solicitation No. W917PM-07-R-0021

US Army Corps
of Engineers
Afghanistan Engineer District

# Uniformed Police District Headquarters, Jawzjan and Sar-i-Pol Provinces, Afghanistan

## Design/Bid/Build
## Project Specifications
## and Drawings

## Proposal Requirements, Contract Forms, Conditions of the Contract

***Electronic proposals are not acceptable***

Nov 2007

**THIS IS A SINGLE-PHASE REQUEST FOR PROPOSAL**

| SOLICITATION, OFFER, AND AWARD *(Construction, Alteration, or Repair)* | 1. SOLICITATION NO. W917PM-07-R-0021 | 2. TYPE OF SOLICITATION [ ] SEALED BID (IFB) [X] NEGOTIATED *(RFP)* | 3. DATE ISSUED 20-Nov-2006 | PAGE OF PAGES 1 OF 380 |
|---|---|---|---|---|

**IMPORTANT - The "offer" section on the reverse must be fully completed by offeror.**

| 4. CONTRACT NO. | 5. REQUISITION/PURCHASE REQUEST NO. | 6. PROJECT NO. |
|---|---|---|
| | | |

| 7. ISSUED BY CODE W917PM | 8. ADDRESS OFFER TO *(If Other Than Item 7)* CODE |
|---|---|
| AFGHANISTAN ENGINEER DISTRICT<br>US ARMY CORPS OF ENGINEERS<br>KABUL<br>APO AE 09356<br><br>TEL: FAX: | **See Item 7**<br><br>TEL: FAX: |

| 9. FOR INFORMATION CALL: | A. NAME | B. TELEPHONE NO. *(Include area code)* *(NO COLLECT CALLS)* |
|---|---|---|
| | MAMIE R ANDERSON | 540-665-3467 |

**SOLICITATION**

**NOTE: In sealed bid solicitations "offer" and "offeror" mean "bid" and "bidder".**

10. THE GOVERNMENT REQUIRES PERFORMANCE OF THE WORK DESCRIBED IN THESE DOCUMENTS *(Title, identifying no., date):*

Project consist of design and construction of fourteen (14) Afghan National Police (ANP) Uniformed Police District Headquarters facilities in the Jawzjan and Sar-i-Pol provinces of Afghanistan.

Estimated cost range of this project is between $1,000,000.00 and $5,000,000.00

NOTICE: Return Section 00600, "Representations and Certifications" and requested pre-award information from Sections 00010" Solicitation Contract Form" and 00100 "Bidding Schedule/Instructions to Bidders", with your proposal.

Preproposal Conference scheduled: 28 November 2006, 10:00 AM, Local time

Written request for information must be directed to the person listed in Item 9 above or email: mamie.r.anderson @tac01.usace.army.mil, or stella.m.lejeune@tac01.usace.army.mil. Inquiries and request that are directed to any other person(s) may not be relayed to the proper person and may not be answered.

If proposal is hand carried, deliver to: US Army Corps of Engineers, House 1 Street 1, West Wazir Akbar Khan (behind Aman High School), Kabul, Afghanistan, prior to the time and date specified for receipt of proposals. Due to heightened security conditions, access to the building is controlled by security personnel.

11. The Contractor shall begin performance within 7 calendar days and complete it within 390 calendar days after receiving [ ] award, [X] notice to proceed. This performance period is [X] mandatory, [ ] negotiable. *(See* 00800 *.)*

| 12 A. THE CONTRACTOR MUST FURNISH ANY REQUIRED PERFORMANCE AND PAYMENT BONDS? *(If "YES," indicate within how many calendar days after award in Item 12B.)* [ ] YES [X] NO | 12B. CALENDAR DAYS |
|---|---|

13. ADDITIONAL SOLICITATION REQUIREMENTS:

A. Sealed offers in original and 3 copies to perform the work required are due at the place specified in Item 8 by 05:00 PM *(hour)* local time 20 Dec 2006 *(date).* If this is a sealed bid solicitation, offers must be publicly opened at that time. Sealed envelopes containing offers shall be marked to show the offeror's name and address, the solicitation number, and the date and time offers are due.

B. An offer guarantee [ ] is, [X] is not required.

C. All offers are subject to the (1) work requirements, and (2) other provisions and clauses incorporated in the solicitation in full text or by reference.

D. Offers providing less than 120 calendar days for Government acceptance after the date offers are due will not be considered and will be rejected.

## SOLICITATION, OFFER, AND AWARD (Continued)

*(Construction, Alteration, or Repair)*

**OFFER** ***(Must be fully completed by offeror)***

| 14. NAME AND ADDRESS OF OFFEROR *(Include ZIP Code)* | | 15. TELEPHONE NO. *(Include area code)* |
|---|---|---|
| | | 16. REMITTANCE ADDRESS *(Include only if different than Item 14)*<br>**See Item 14** |
| CODE | FACILITY CODE | |

17. The offeror agrees to perform the work required at the prices specified below in strict accordance with the terms of this solicitation, if this offer is accepted by the Government in writing within _____ calendar days after the date offers are due. *(Insert any number equal to or greater than the minimum requirements stated in Item 13D. Failure to insert any number means the offeror accepts the minimum in Item 13D.)*

| AMOUNTS | SEE SCHEDULE OF PRICES |
|---|---|

18. The offeror agrees to furnish any required performance and payment bonds.

19. ACKNOWLEDGMENT OF AMENDMENTS

*(The offeror acknowledges receipt of amendments to the solicitation -- give number and date of each)*

| AMENDMENT NO. | | | | | | | | | | |
|---|---|---|---|---|---|---|---|---|---|---|
| DATE | | | | | | | | | | |

| 20A. NAME AND TITLE OF PERSON AUTHORIZED TO SIGN OFFER *(Type or print)* | 20B. SIGNATURE | 20C. OFFER DATE |
|---|---|---|
| | | |

**AWARD** ***(To be completed by Government)***

21. ITEMS ACCEPTED:

| 22. AMOUNT | 23. ACCOUNTING AND APPROPRIATION DATA |
|---|---|
| | |

| 24. SUBMIT INVOICES TO ADDRESS SHOWN IN *(4 copies unless otherwise specified)* | **ITEM** | 25. OTHER THAN FULL AND OPEN COMPETITION PURSUANT TO<br>☐ 10 U.S.C. 2304(c) ☐ 41 U.S.C. 253(c) |
|---|---|---|
| 26. ADMINISTERED BY CODE | | 27. PAYMENT WILL BE MADE BY: CODE |

*CONTRACTING OFFICER WILL COMPLETE ITEM 28 OR 29 AS APPLICABLE*

☐ 28. NEGOTIATED AGREEMENT *(Contractor is required to sign this document and return _ _ copies to issuing office.)* Contractor agrees to furnish and deliver all items or perform all work, requisitions identified on this form and any continuation sheets for the consideration stated in this contract. The rights and obligations of the parties to this contract shall be governed by (a) this contract award, (b) the solicitation, and (c) the clauses, representations, certifications, and specifications or incorporated by reference in or attached to this contract.

☐ 29. AWARD *(Contractor is not required to sign this document.)* Your offer on this solicitation, is hereby accepted as to the items listed. This award consummates the contract, which consists of (a) the Government solicitation and your offer, and (b) this contract award. No further contractual document is necessary.

| 30A. NAME AND TITLE OF CONTRACTOR OR PERSON AUTHORIZED TO SIGN *(Type or print)* | | 31A. NAME OF CONTRACTING OFFICER *(Type or print)*<br>TEL: EMAIL: |
|---|---|---|
| 30B. SIGNATURE | 30C. DATE | 31B. UNITED STATES OF AMERICA<br>BY |
| | | 31C. AWARD DATE |

# TABLE OF CONTENTS

DESIGN-BID-BUILD SPECIFICATIONS
UNIFORMED POLICE DISTRICT HEADQUARTERS,
JAWZJAN AND SAR-I-POL PROVINCES, AFGHANISTAN


| Section | Title |
|---|---|
| 00010 | Proposal Form |
| 00110 | Proposal Preparation |
| 00120 | Proposal Evaluation and Contract Award |
| 00100 | Contract Clauses |
| 00600 | Representations and Certifications |
| 00700 | Contract Clauses |
| 00800 | Special Contract Requirements |
| 01010 | Scope of Work |
| 01015 | Technical Requirements |
| 01060 | Special Clauses |
| 01312 | Quality Control System (QCS) |
| 01321 | Project Schedule |
| 01335 | Submittal Procedures |
| 01415 | Metric Measurements |
| 01451 | Contractor Quality Control |
| 01525 | Safety & Occupational Health Requirements |
| 01770 | Closeout Procedures |
| 01780 | Closeout Submittals |
| 01781 | Operation and Maintenance Data |
| Appendix A | Drawings |
| Appendix B | Templates |

Section 00010 - Solicitation Contract Form

INFORMATION FOR CONTRACTOR

**INTERNATIONAL DUNS REQUEST INFORMATION:**

Please follow the website below and fill in the International DUNS Request form.
<http://www.dnb.com/upik/uk/intldunsform.asp?link=request>
If you have problems with the form or require a DUNS number immediately, please contact your local D&B Office which can be found at the website below.

<http://www.dnb.com/US/customer_service/global_listing.asp>

* * * * * * * * * * * *

**Special Clause Reference Instructions to All Offerors as Applicable**

Section 100 – 52.222-23
Section 600 – 52.222-22
Section 700 – 52.222-21, 26, 27, 29, 35, 36, 37
"Only applicable if contractor recruits personnel within the US."

252.247-7024 "Only applicable if contractor gave a negative response to 252.247-7022."

52.204-3, 52.232-38, 52.204-6, 252.204-7001, 52.232-34
"Only applicable to contractors that are not to be registered in the CCR database."

52.232-33, 252.204-7004 *(note to specialist: 52.204-7 should not be in if the DFARS clause 252.204-7004 replaces it in full)*
"Only applicable to contractors that are to be registered in the CCR database."

252.229-7000, 252.229-7001
"Only applicable if contractor is a foreign concern."

* * * * * * ** * * * * * * * * * * *

Contractor Status and Notifications

- Reference DODI 5525.11. The contractor is directed to provide all of its personnel working under this contract, and to require all of its subcontractors to provide their personnel, with written notification that - with the exception of nationals of Afghanistan and those ordinarily resident in Afghanistan - contractor and subcontractor personnel, and the dependents of contractor and subcontractor personnel who are residing with such personnel, may be subject to US criminal jurisdiction as provided for in the Military Extraterritorial Jurisdiction Act, 18 USC 3261-3267; see Section 3267(1)(A)(iii)(I) and (2)(A)(iii). **A copy of the notice shall be furnished to the contracting officer upon award of the contract, along with a certification by an authorized**

**company representative attesting to the provision of the notification to contractor personnel.**

- This contract is firm fixed-price. Costs incurred in the performance of project execution that arise from the attacks of hostile entities, such as costs arising from damage to or destruction of contractor equipment and facilities, and damage to or destruction of the project prior to Government acceptance, are the sole responsibility of the contractor. The Government makes no guarantee to provide the contractor with security, and bears no obligation to reimburse the contractor for costs arising from the attacks of hostile entities. The Government may provide the contractor with an equitable adjustment with respect to time in accordance with clause 52.249-10; see 52.249-10(b)(1)(i) and (2).

- The contractor shall provide all personnel working under this contract, and shall require subcontractors to provide their personnel, with a written notification advising such personnel to be aware of US State Department Travel Warnings with respect to Afghanistan, available at http://travel.state.gov, in the event they wish to consider bringing their dependants into Afghanistan. **A copy of the notice shall be furnished to the contracting officer upon award of the contract, along with a certification by an authorized company representative attesting to the provision of the notification to contractor personnel.** At no time, subject to the written approval of the contracting officer, may the contractor allow such dependants, or any other unauthorized individuals, to be present on the project site grounds, whether in transit or otherwise.

END OF SECTION

**SECTION 00010**

**PROPOSAL SCHEDULE**

The Contractor shall provide a price for all items shown on this proposal schedule. The Government will evaluate the Contractor's entire proposal to determine price reasonableness of each CLINs.

| No. | Description | Qty | Unit | Unit Price | Total Amount |
|---|---|---|---|---|---|
| 0001 | Surveys and Master Planning For all sites | 1 | LS | XXX | $_____ |
| **UP District HQ- Darzab** (Clins 0001 – 0006) | | | | | |
| 0002 | Mobilization | 1 | LS | XXX | $_____ |
| 0003 | Demobilization | 1 | LS | XXX | $_____ |
| 0004 | As Built Drawings | 1 | LS | XXX | $_____ |
| 0005 | Site Development (Construction) | | | | |
| 0005AA | De-Mining Activities | 1 | LS | XXX | $_____ |
| 0005AB | Grading | 1 | LS | XXX | $_____ |
| 0005AC | Water System | 1 | LS | XXX | $_____ |
| 0005AD | Sanitary Sewer System | 1 | LS | XXX | $_____ |
| 0005AE | Site Electrical Distribution System | 1 | LS | XXX | $_____ |
| 0005AF | Force Protection Measures | 1 | LS | XXX | $_____ |
| 0005AG | Road Network | 1 | LS | XXX | $_____ |
| 0005AH | Trash Point | 1 | LS | XXX | $_____ |
| **Sub-Total Site Development only** | | | | | **$**_____ |
| 0006 | UP District HQ Building (Construction) | 1 | LS | XXX | $_____ |
| **TOTAL of Clins 0001 – 0006 (Darzab)** | | | | | **$**_____ |

## UP District HQ- Faizabad

(Clins 0007 – 0011)

| | | | | |
|---|---|---|---|---|
| 0007 Mobilization | 1 | LS | XXX | $_____ |
| 0008 Demobilization | 1 | LS | XXX | $_____ |
| 0009 As Built Drawings | 1 | LS | XXX | $_____ |
| 0010 Site Development (Construction) | | | | |
| 0010AA De-Mining Activities | 1 | LS | XXX | $_____ |
| 0010AB Grading | 1 | LS | XXX | $_____ |
| 0010AC Water System | 1 | LS | XXX | $_____ |
| 0010AD Sanitary Sewer System | 1 | LS | XXX | $_____ |
| 0010AE Site Electrical Distribution System | 1 | LS | XXX | $_____ |
| 0010AF Force Protection Measures | 1 | LS | XXX | $_____ |
| 0010AG Road Network | 1 | LS | XXX | $_____ |
| 0010AH Trash Point | 1 | LS | XXX | $_____ |
| **Sub-Total Site Development only** | | | | **$**_____ |
| 0011 UP District HQ Building (Construction) | 1 | LS | XXX | $_____ |

**TOTAL of Clins 0007 – 0011 (Faizabad)** **$**_____

## UP District HQ- Kamhyab

(Clins 0012 – 0016)

| | | | | |
|---|---|---|---|---|
| 0012 Mobilization | 1 | LS | XXX | $_____ |
| 0013 Demobilization | 1 | LS | XXX | $_____ |
| 0014 As Built Drawings | 1 | LS | XXX | $_____ |
| 0015 Site Development (Construction) | | | | |
| 0015AA De-Mining Activities | 1 | LS | XXX | $_____ |
| 0015AB Grading | 1 | LS | XXX | $_____ |
| 0015AC Water System | 1 | LS | XXX | $_____ |
| 0015AD Sanitary Sewer System | 1 | LS | XXX | $_____ |
| 0015AE Site Electrical Distribution System | 1 | LS | XXX | $_____ |
| 0015AF Force Protection Measures | 1 | LS | XXX | $_____ |
| 0015AG Road Network | 1 | LS | XXX | $_____ |
| 0015AH Trash Point | 1 | LS | XXX | $_____ |
| **Sub-Total Site Development only** | | | | **$**_____ |
| 0016 UP District HQ Building (Construction) | 1 | LS | XXX | $_____ |
| **TOTAL of Clins 0012 – 0016 (Kamhyab)** | | | | **$**_____ |

## UP District HQ- District Khannaga

(Clins 0017 – 0021)

| | | | | |
|---|---|---|---|---|
| 0017 Mobilization | 1 | LS | XXX | $_____ |
| 0018 Demobilization | 1 | LS | XXX | $_____ |
| 0019 As Built Drawings | 1 | LS | XXX | $_____ |
| 0020 Site Development (Construction) | | | | |
| 0020AA De-Mining Activities | 1 | LS | XXX | $_____ |
| 0020AB Grading | 1 | LS | XXX | $_____ |
| 0020AC Water System | 1 | LS | XXX | $_____ |
| 0020AD Sanitary Sewer System | 1 | LS | XXX | $_____ |
| 0020AE Site Electrical Distribution System | 1 | LS | XXX | $_____ |
| 0020AF Force Protection Measures | 1 | LS | XXX | $_____ |
| 0020AG Road Network | 1 | LS | XXX | $_____ |
| 0020AH Trash Point | 1 | LS | XXX | $_____ |
| **Sub-Total Site Development only** | | | | **$**_____ |
| 0021 UP District HQ Building (Construction) | 1 | LS | XXX | $_____ |

**TOTAL of Clins 0017 – 0021 (Khannaga)** **$**_____

## UP District HQ- Khwaja Dukoh

(Clins 0022 – 0026)

| | | | | |
|---|---|---|---|---|
| 0022 Mobilization | 1 | LS | XXX | $_____ |
| 0023 Demobilization | 1 | LS | XXX | $_____ |
| 0024 As Built Drawings | 1 | LS | XXX | $_____ |
| 0025 Site Development (Construction) | | | | |
| 0025AA De-Mining Activities | 1 | LS | XXX | $_____ |
| 0025AB Grading | 1 | LS | XXX | $_____ |
| 0025AC Water System | 1 | LS | XXX | $_____ |
| 0025AD Sanitary Sewer System | 1 | LS | XXX | $_____ |
| 0025AE Site Electrical Distribution System | 1 | LS | XXX | $_____ |
| 0025AF Force Protection Measures | 1 | LS | XXX | $_____ |
| 0025AG Road Network | 1 | LS | XXX | $_____ |
| 0025AH Trash Point | 1 | LS | XXX | $_____ |
| **Sub-Total Site Development only** | | | | **$**_____ |
| 0026 UP District HQ Building (Construction) | 1 | LS | XXX | $_____ |

**TOTAL of Clins 0022 – 0026 (Khwaja Dukoh)** **$**_____

## UP District HQ- Mangajak

(Clins 0027 – 0031)

| | | | | |
|---|---|---|---|---|
| 0027 Mobilization | 1 | LS | XXX | $_____ |
| 0028 Demobilization | 1 | LS | XXX | $_____ |
| 0029 As Built Drawings | 1 | LS | XXX | $_____ |
| 0030 Site Development (Construction) | | | | |
| 0030AA De-Mining Activities | 1 | LS | XXX | $_____ |
| 0030AB Grading | 1 | LS | XXX | $_____ |
| 0030AC Water System | 1 | LS | XXX | $_____ |
| 0030AD Sanitary Sewer System | 1 | LS | XXX | $_____ |
| 0030AE Site Electrical Distribution System | 1 | LS | XXX | $_____ |
| 0030AF Force Protection Measures | 1 | LS | XXX | $_____ |
| 0030AG Road Network | 1 | LS | XXX | $_____ |
| 0030AH Trash Point | 1 | LS | XXX | $_____ |
| **Sub-Total Site Development only** | | | | **$**_____ |
| 0031 UP District HQ Building (Construction) | 1 | LS | XXX | $_____ |

**TOTAL of Clins 0027 – 0031 (Mangajak)** **$**_____

## UP District HQ- Mardyan

(Clins 0032 – 0036)

| | | | | |
|---|---|---|---|---|
| 0032 Mobilization | 1 | LS | XXX | $_____ |
| 0033 Demobilization | 1 | LS | XXX | $_____ |
| 0034 As Built Drawings | 1 | LS | XXX | $_____ |
| 0035 Site Development (Construction) | | | | |
| 0035AA De-Mining Activities | 1 | LS | XXX | $_____ |
| 0035AB Grading | 1 | LS | XXX | $_____ |
| 0035AC Water System | 1 | LS | XXX | $_____ |
| 0035AD Sanitary Sewer System | 1 | LS | XXX | $_____ |
| 0035AE Site Electrical Distribution System | 1 | LS | XXX | $_____ |
| 0035AF Force Protection Measures | 1 | LS | XXX | $_____ |
| 0035AG Road Network | 1 | LS | XXX | $_____ |
| 0035AH Trash Point | 1 | LS | XXX | $_____ |
| **Sub-Total Site Development only** | | | | **$**_____ |
| 0036 UP District HQ Building (Construction) | 1 | LS | XXX | $_____ |

**TOTAL of Clins 0032 – 0036 (Mardyan)** **$**_____

## UP District HQ- Qargin

(Clins 0037 – 0041)

| | | | | |
|---|---|---|---|---|
| 0037 Mobilization | 1 | LS | XXX | $_____ |
| 0038 Demobilization | 1 | LS | XXX | $_____ |
| 0039 As Built Drawings | 1 | LS | XXX | $_____ |
| 0040 Site Development (Construction) | | | | |
| 0040AA De-Mining Activities | 1 | LS | XXX | $_____ |
| 0040AB Grading | 1 | LS | XXX | $_____ |
| 0040AC Water System | 1 | LS | XXX | $_____ |
| 0040AD Sanitary Sewer System | 1 | LS | XXX | $_____ |
| 0040AE Site Electrical Distribution System | 1 | LS | XXX | $_____ |
| 0040AF Force Protection Measures | 1 | LS | XXX | $_____ |
| 0040AG Road Network | 1 | LS | XXX | $_____ |
| 0040AH Trash Point | 1 | LS | XXX | $_____ |
| **Sub-Total Site Development only** | | | | **$**_____ |
| 0041 UP District HQ Building (Construction) | 1 | LS | XXX | $_____ |

**TOTAL of Clins 0037 – 0041 (Qargin)** **$**_____

## UP District HQ- Qoshtepa

(Clins 0042 – 0046)

| | | | | |
|---|---|---|---|---|
| 0042 Mobilization | 1 | LS | XXX | $_____ |
| 0043 Demobilization | 1 | LS | XXX | $_____ |
| 0044 As Built Drawings | 1 | LS | XXX | $_____ |
| 0045 Site Development (Construction) | | | | |
| 0045AA De-Mining Activities | 1 | LS | XXX | $_____ |
| 0045AB Grading | 1 | LS | XXX | $_____ |
| 0045AC Water System | 1 | LS | XXX | $_____ |
| 0045AD Sanitary Sewer System | 1 | LS | XXX | $_____ |
| 0045AE Site Electrical Distribution System | 1 | LS | XXX | $_____ |
| 0045AF Force Protection Measures | 1 | LS | XXX | $_____ |
| 0045AG Road Network | 1 | LS | XXX | $_____ |
| 0045AH Trash Point | 1 | LS | XXX | $_____ |
| **Sub-Total Site Development only** | | | | **$**_____ |
| 0046 UP District HQ Building (Construction) | 1 | LS | XXX | $_____ |

**TOTAL of Clins 0042 – 0046 (Qoshtepa)** **$**_____

## UP District HQ- Suzma Qala

(Clins 0047 – 0051)

| | | | | |
|---|---|---|---|---|
| 0047 Mobilization | 1 | LS | XXX | $_____ |
| 0048 Demobilization | 1 | LS | XXX | $_____ |
| 0049 As Built Drawings | 1 | LS | XXX | $_____ |
| 0050 Site Development (Construction) | | | | |
| 0050AA De-Mining Activities | 1 | LS | XXX | $_____ |
| 0050AB Grading | 1 | LS | XXX | $_____ |
| 0050AC Water System | 1 | LS | XXX | $_____ |
| 0050AD Sanitary Sewer System | 1 | LS | XXX | $_____ |
| 0050AE Site Electrical Distribution System | 1 | LS | XXX | $_____ |
| 0050AF Force Protection Measures | 1 | LS | XXX | $_____ |
| 0050AG Road Network | 1 | LS | XXX | $_____ |
| 0050AH Trash Point | 1 | LS | XXX | $_____ |
| **Sub-Total Site Development only** | | | | **$**_____ |
| 0051 UP District HQ Building (Construction) | 1 | LS | XXX | $_____ |

**TOTAL of Clins 0047 – 0051 (Suzma Qala)** **$**_____

## UP District HQ- Sayad

(Clins 0052 – 0056)

| | | | | |
|---|---|---|---|---|
| 0052 Mobilization | 1 | LS | XXX | $_____ |
| 0053 Demobilization | 1 | LS | XXX | $_____ |
| 0054 As Built Drawings | 1 | LS | XXX | $_____ |
| 0054 Site Development (Construction) | | | | |
| 0054AA De-Mining Activities | 1 | LS | XXX | $_____ |
| 0054AB Grading | 1 | LS | XXX | $_____ |
| 0054AC Water System | 1 | LS | XXX | $_____ |
| 0054AD Sanitary Sewer System | 1 | LS | XXX | $_____ |
| 0054AE Site Electrical Distribution System | 1 | LS | XXX | $_____ |
| 0054AF Force Protection Measures | 1 | LS | XXX | $_____ |
| 0054AG Road Network | 1 | LS | XXX | $_____ |
| 0054AH Trash Point | 1 | LS | XXX | $_____ |
| **Sub-Total Site Development only** | | | | **$**_____ |
| 0055 UP District HQ Building (Construction) | 1 | LS | XXX | $_____ |

**TOTAL of Clins 0052 – 0055 (Sayad)** **$**_____

## UP District HQ- Kohistanat

(Clins 0056-0060)

| | | | | |
|---|---|---|---|---|
| 0056 Mobilization | 1 | LS | XXX | $_____ |
| 0057 Demobilization | 1 | LS | XXX | $_____ |
| 0058 As Built Drawings | 1 | LS | XXX | $_____ |
| 0059 Site Development (Construction) | | | | |
| 0059AA De-Mining Activities | 1 | LS | XXX | $_____ |
| 0059AB Grading | 1 | LS | XXX | $_____ |
| 0059AC Water System | 1 | LS | XXX | $_____ |
| 0059AD Sanitary Sewer System | 1 | LS | XXX | $_____ |
| 0059AE Site Electrical Distribution System | 1 | LS | XXX | $_____ |
| 0059AF Force Protection Measures | 1 | LS | XXX | $_____ |
| 0059AG Road Network | 1 | LS | XXX | $_____ |
| 0059AH Trash Point | 1 | LS | XXX | $_____ |
| **Sub-Total Site Development only** | | | | **$**_____ |
| 0060 UP District HQ Building (Construction) | 1 | LS | XXX | $_____ |

**TOTAL of Clins 0056 – 0060 (Kohistanat)** **$**_____

## UP District HQ- Balkhab

(Clins 0061-0066)

| | | | | |
|---|---|---|---|---|
| 0061 Mobilization | 1 | LS | XXX | $_____ |
| 0062 Demobilization | 1 | LS | XXX | $_____ |
| 0063 As Built Drawings | 1 | LS | XXX | $_____ |
| 0064 Site Development (Construction) | | | | |
| 0064AA De-Mining Activities | 1 | LS | XXX | $_____ |
| 0064AB Grading | 1 | LS | XXX | $_____ |
| 0064AC Water System | 1 | LS | XXX | $_____ |
| 0064AD Sanitary Sewer System | 1 | LS | XXX | $_____ |
| 0064AE Site Electrical Distribution System | 1 | LS | XXX | $_____ |
| 0064AF Force Protection Measures | 1 | LS | XXX | $_____ |
| 0064AG Road Network | 1 | LS | XXX | $_____ |
| 0064AH Trash Point | 1 | LS | XXX | $_____ |
| **Sub-Total Site Development only** | | | | **$**_____ |
| 0065 UP District HQ Building (Construction) | 1 | LS | XXX | $_____ |

**TOTAL of Clins 0061 – 0065 (Balkhab)** **$**_____

## UP District HQ- Sangcharak

(Clins 0066-0070)

| | | | | |
|---|---|---|---|---|
| 0066 Mobilization | 1 | LS | XXX | $_____ |
| 0067 Demobilization | 1 | LS | XXX | $_____ |
| 0068 As Built Drawings | 1 | LS | XXX | $_____ |
| 0069 Site Development (Construction) | | | | |
| 0069AA De-Mining Activities | 1 | LS | XXX | $_____ |
| 0069AB Grading | 1 | LS | XXX | $_____ |
| 0069AC Water System | 1 | LS | XXX | $_____ |
| 0069AD Sanitary Sewer System | 1 | LS | XXX | $_____ |
| 0069AE Site Electrical Distribution System | 1 | LS | XXX | $_____ |
| 0069AF Force Protection Measures | 1 | LS | XXX | $_____ |
| 0069AG Road Network | 1 | LS | XXX | $_____ |
| 0069AH Trash Point | 1 | LS | XXX | $_____ |
| **Sub-Total Site Development only** | | | | **$**_____ |
| 0070 UP District HQ Building (Construction) | 1 | LS | XXX | $_____ |

**TOTAL of Clins 0066 – 0070 (Sangcharak)** **$**_____

**GRAND TOTAL OF ALL ITEMS:** **$**_____

## PROPOSAL SCHEDULE NOTES:

1. Offeror shall submit prices on all items.

2. Prices shown on the bid schedule shall include all costs associated with the cost of doing business in performance of the work required in Section 01010 of this solicitation/contract. Prices shall include all items of work such as site specific submittals, construction costs for site, facilities and utilities preparation as required in section 01010 of this solicitation.

END OF SECTION

# SECTION 00110

# PROPOSAL PREPARATION

## PART 1 – GENERAL

**A. PROPOSAL PREPARATION.** Instructions for the preparation and organization of each proposal are included herein. The proposal submittal shall include one original and three copies of the Volume I and one original and two copies of the Volume II proposal. Volume I and Volume II shall be clearly marked and sealed. The proposal shall be submitted as required herein and elsewhere in the solicitation.

Note: Templates. Model templates are provided in Appendix B as a possible format available to assist offerors in the preparation of their proposals. Use of the template format is not required. Sections 110 and 120 of this RFP govern and the templates do not supplant or substitute the requirements stated in these sections.

**B. PROPOSAL EVALUATION & AWARD:**

**B.1** Proposals will be evaluated based on their technical merit of acceptability and lowest price for the work described herein. Award will be made to the offeror whose proposal is technically acceptable and is the lowest priced benefit to the Government. The technical factors of Factor 1-Past Performance; Factor 2-Construction Experience; Factor 3- Project Management and Factor 4- Personnel and Equipment Resources will be evaluated, as described below, for an acceptable or unacceptable technical rating. To be considered technically acceptable an offeror must be acceptable for all factors.

**B.2 VOLUME I – MANAGEMENT-TECHNICAL PROPOSAL PREPARATION.** The Management/Technical proposal shall include the information as described below and shall be presented in the sequence listed.

**Factor 1- Past Performance**: For the projects listed under Factor 2, - Experience, provide the following information:

- Customer Point of Contact (name, telephone, email) for performance information
- List the problems encountered and the corrective actions taken
- List of change orders and circumstances associated with them
- Construction time duration beyond the original performance period and why.
- Construction cost in dollars beyond the original contract amount and why.
- Safety record and accident report

The offeror may also provide letters of recommendation, references, performance evaluations or other evidence of successful performance of the project.

**Factor 2- Construction Experience**: Demonstrate the experience of the team, including sub-contractors, on projects similar to that described in this RFP. Provide a list of no more than five similar and relevant projects underway or completed in the last four years that best demonstrates your experience. The list of projects shall include the following information:

- Project name and location.

- Nature of firm's responsibility (prime or subcontractor).
- Project owner's name, address, telephone, email (to be contacted by the Government).
- Project completion date and duration (estimated if in progress)
- Construction cost
- Brief explanation that illustrates the capabilities of the contractor or joint-venture and relevant job experiences.

**Factor 3 - Project Management Plan:** The Project Management Plan shall include the following:

- Procedures used to manage the construction process. Include a discussion of management of concurrent work at multiple job sites.
- Provide an organization chart.
- Quality control and safety management processes.
- Process to control cost and schedule growth.
- Interaction process with the Corps of Engineers and the roles that the team members will have in dealing with significant issues.
- Logistics Management - procedures for ordering and timely delivery of construction supplies. Include a plan to support concurrent construction at multiple sites.

Do NOT provide biographical information in this section.
Limit discussion to no more than ten pages.

**Factor 4 – Personnel and Equipment Resources Plan:** Provide professional resume data on the following individuals who will be key personnel on the project team. Key personnel identified in this section should be senior working-level people who will be involved in design and construction on a day-to-day basis, as opposed to departmental level supervisors or executives. By identifying these personnel, the offeror makes a commitment that, barring unforeseen circumstances; they are the personnel who shall be assigned to the project. All key personnel shall have a minimum of **five** years of professional experience.

- Project Manager for design and for construction
- Quality Control Manager
- Project Architect
- Senior Structural Engineer
- Senior Civil Engineer
- Senior Mechanical Engineer
- Senior Electrical Engineer
- Fire Protection Engineer
- Construction Superintendent
- Construction Foreman (if different from above)

Information to be provided for key personnel should be limited to no more than one page per person and shall include:

- Name and title
- Project assignment
- Name of firm with which associated
- Years experience with this firm and with other firms
- Education degree(s), year, specialization
- Active registration, year first registered
- Other experience and qualifications relevant to the proposed project
- Provide the proposed use of Afghan contractors and labor in numbers or percentages.

Provide equipment resources to be utilized for this project (i.e. offices, shops, warehouses, machinery, construction tools, vehicles, loaders, etc.) and other resources (i.e. cooperating companies supplying materials and/or services)

**B.3 VOLUME II - COST/PRICE PROPOSAL PREPARATION**

**Proposal Schedule.** Offerors shall provide a signed cover letter and complete the Proposal Schedule by filling out the pricing data blanks. An executable Proposal Schedule is included in Section 00010 herein. Overhead and profit and all other costs associated with the execution of this project shall be applied proportionally to each category and shall not be required to be shown separately. All costs and prices shall be firm-fixed.

**Cost/Price Supporting Information.** In addition to the completed pricing schedule, the contractor shall provide supporting information in the way of cost breakdowns and assumptions made in determining the proposed prices for this project.

**B.4 CLARIFICATIONS AND PROPOSAL REVISION:**

Clarifications Prior to Proposal Due Date: In the event that clarifications are required prior to submitting the proposal, contact the individuals listed on the solicitation. Any changes made to the solicitation will be made via an amendment which will be disseminated amongst all the interested offerors.

Initial Offer: The Government intends to award a contract on the basis of the initial offers received without further discussions or negotiations. Offers should contain the offeror's best terms from a cost and management standpoint.

- End of Section -

# SECTION 00120

## PROPOSAL EVALUATION AND CONTRACT AWARD

## PART 1 – GENERAL

**A. <u>BASIS FOR AWARD:</u>** Award will be made on the basis of the lowest evaluated price of proposals meeting or exceeding the acceptability standards for non-cost factors. Tradeoffs are not permitted. Proposals are evaluated for acceptability but not ranked using non-cost/price factors.

**<u>B. EVALUATION OF FACTORS:</u>** Evaluation will be performed on each proposal. The Evaluation Factors for Award are outlined below: The proposal that provides the lowest price that is considered to be fair and reasonable will be evaluated to determine if it is technically acceptable. To be considered technically acceptable, no technical factor in the proposal may be determined to be unacceptable.

**B.1 FACTORS: The Technical Factors are comprised of:**

**Past Performance; Construction Experience and Project Management, and Personnel and Equipment Resources. The failure of a proposal to meet any of the factors will result in a technically unacceptable rating and preclude award to the offeror submitting the proposal.**

**C. PROPOSAL EVALUATION.**

**VOLUME 1 – MANAGEMENT-TECHNICAL PROPOSAL.**

**Factor 1 – Past Performance.** This factor may be evaluated by contacting references for **customer satisfaction** and review of **quality performance** evaluations or other information provided by the offeror or obtained by the Government. The evaluators will consider the **relevance** of the past performance information and the success achieved on past projects to determine the rating. In the event that an offeror does not have a record of past performance evaluations, a written explanation of the reasons why no record is available is requested. In the case of an offeror without a record of relevant past performance evaluations or for whom information on past performance is not available, a neutral rating will be assigned.

The information provided will be used to evaluate the relevancy of each offeror's construction experience. Qualifying project(s) shall have been awarded within the past three years. Relevancy for an incomplete project will depend upon the status of the physical completion of the project. Those closer to physical completion will be considered more relevant. Offerors are responsible for providing project descriptions in sufficient detail to permit evaluation of project relevancy. An English speaking representative and phone number must be included with every project listed.

**Factor 2 - Construction Experience.** The Government will evaluate the relevant work experience of the contractor's company and designer, including subcontractors, on projects similar to that described in this RFP. Contractor experience with similar relevant projects (type of construction, dollar value, design-build method, complexity) will have a better chance to receive an acceptable rating than those with dissimilar or non-relevant projects.

**Factor 3 – Project Management Plan.** The Government will evaluate the Project Management Plan which will include the contractor's construction management process, the company's quality control and safety management procedures, its ability to control cost and schedule growth, its ability to resolve problems, a description of its interactions with the Corps of Engineers, and its logistics management capabilities. The less convincing the evidence, the more likely the Project Management Plan will be considered unacceptable. Deviations from RFP requirements or technical specifications may result in an unacceptable rating.

**Factor 4 – Personnel and Equipment Resources Plan.**

**Personnel.** The Government will evaluate the qualifications and experience of contactor's personnel for this project. Contractor personnel with experience that is associated with **similar and relevant** projects (type of construction, dollar value, design-build method, complexity) will have a better chance to receive an acceptable rating than those with dissimilar or non-relevant project experience. The contractor's utilization of Afghan personnel will also be evaluated.

**Equipment Resources.** The Government will evaluate the adequacy of the offeror's equipment resources to successfully complete the project**.**

**C.1** Each offeror's proposal shall receive a technical evaluation of the offeror's Past Performance; Construction Experience, Project Management and Personnel and Equipment Resources. Each factor (evaluation criteria) will receive an rating of either acceptable or unacceptable.

**D. VOLUME II - COST/PRICE PROPOSAL PREPARATION.** Price or cost to the Government will be evaluated and considered, but will not receive an actual rating or be combined with other aspects of the proposal evaluation. The proposed price will be analyzed for fairness and reasonableness. It may also be evaluated to determine whether it is realistic for the work to be performed; reflects the Contractor's clear understanding of the requirements; and is consistent with the offeror's technical proposal. Additionally, all offers with separately priced line items will be reviewed for
unbalanced pricing.

**E. METHOD OF PROPOSAL EVALUATION**

**E.1** Proposals will be reviewed to determine if they contain the required minimum procurement and technical data.

Incomplete proposals may be eliminated. All forms shall be filled in and all requested data must be provided.

**E.2** The Government may reject any or all proposals and waive minor irregularities in proposals.

**E. 3 SELECTION and AWARD.** Award will be made to the offeror that, in the judgment of the Contracting Officer, is technically acceptable and provides the lowest price that is considered to be fair and reasonable.

-- End of Section --

Section 00100 - Bidding Schedule/Instructions to Bidders

## CLAUSES INCORPORATED BY FULL TEXT

### 52.204-6 DATA UNIVERSAL NUMBERING SYSTEM (DUNS) NUMBER (OCT 2003)

(a) The offeror shall enter, in the block with its name and address on the cover page of its offer, the annotation “DUNS” or “DUNS+4” followed by the DUNS number or “DUNS+4” that identifies the offeror's name and address exactly as stated in the offer. The DUNS number is a nine-digit number assigned by Dun and Bradstreet, Inc. The DUNS+4 is the DUNS number plus a 4-character suffix that may be assigned at the discretion of the offeror to establish additional CCR records for identifying alternative Electronic Funds Transfer (EFT) accounts (see Subpart 32.11) for the same parent concern.

(b) If the offeror does not have a DUNS number, it should contact Dun and Bradstreet directly to obtain one.

(1) An offeror may obtain a DUNS number--

(i) If located within the United States, by calling Dun and Bradstreet at 1-866-705-5711 or via the Internet at http://www.dnb.com; or

(ii) If located outside the United States, by contacting the local Dun and Bradstreet office.

(2) The offeror should be prepared to provide the following information:

(i) Company legal business name.

(ii) Tradestyle, doing business, or other name by which your entity is commonly recognized.

(iii) Company physical street address, city, state and Zip Code.

(iv) Company mailing address, city, state and Zip Code (if separate from physical).

(v) Company telephone number.

(vi) Date the company was started.

(vii) Number of employees at your location.

(viii) Chief executive officer/key manager.

(ix) Line of business (industry).

(x) Company Headquarters name and address (reporting relationship within your entity).

(End of provision)

52.214-34 SUBMISSION OF OFFERS IN THE ENGLISH LANGUAGE (APR 1991)

Offers submitted in response to this solicitation shall be in the English language. Offers received in other than English shall be rejected.

(End of provision)

52.214-35 SUBMISSION OF OFFERS IN U.S. CURRENCY (APR 1991)

Offers submitted in response to this solicitation shall be in terms of U.S. dollars. Offers received in other than U.S. dollars shall be rejected.

(End of provision)

52.214-5000 APPARENT CLERICAL MISTAKES (MAR 1995)--EFARS

(a) For the purpose of initial evaluations of bids, the following will be utilized in the resolving arithmetic discrepancies found on the face of bidding schedule as submitted by the bidder:

(1) Obviously misplaced decimal points will be corrected;

(2) Discrepancy between unit price and extended price, the unit price will govern;

(3) Apparent errors in extension of unit prices will be corrected;

(4) Apparent errors in addition of lump-sum and extended prices will be corrected.

(b) For the purpose of bid evaluation, the government will proceed on the assumption that the bidder intends his bid to be evaluated on basis of the unit prices, the totals arrived at by resolution of arithmetic discrepancies as provided above and the bid will be so reflected on the abstract of bids.

(c) These correction procedures shall not be used to resolve any ambiguity concerning which bid is low.

(End of statement)

52.215-1 INSTRUCTIONS TO OFFERORS--COMPETITIVE ACQUISITION (JAN 2004)

(a) Definitions. As used in this provision--

“Discussions” are negotiations that occur after establishment of the competitive range that may, at the Contracting Officer's discretion, result in the offeror being allowed to revise its proposal.

“In writing or written” means any worded or numbered expression which can be read, reproduced, and later communicated, and includes electronically transmitted and stored information.

“Proposal modification” is a change made to a proposal before the solicitation's closing date and time, or made in response to an amendment, or made to correct a mistake at any time before award.

“Proposal revision” is a change to a proposal made after the solicitation closing date, at the request of or as allowed by a Contracting Officer as the result of negotiations.

“Time”, if stated as a number of days, is calculated using calendar days, unless otherwise specified, and will include Saturdays, Sundays, and legal holidays. However, if the last day falls on a Saturday, Sunday, or legal holiday, then the period shall include the next working day.

(b) Amendments to solicitations. If this solicitation is amended, all terms and conditions that are not amended remain unchanged. Offerors shall acknowledge receipt of any amendment to this solicitation by the date and time specified in the amendment(s).

(c) Submission, modification, revision, and withdrawal of proposals. (1) Unless other methods (e.g., electronic commerce or facsimile) are permitted in the solicitation, proposals and modifications to proposals shall be submitted in paper media in sealed envelopes or packages (i) addressed to the office specified in the solicitation, and (ii) showing the time and date specified for receipt, the solicitation number, and the name and address of the offeror. Offerors using commercial carriers should ensure that the proposal is marked on the outermost wrapper with the information in paragraphs (c)(1)(i) and (c)(1)(ii) of this provision.

(2) The first page of the proposal must show--

(i) The solicitation number;

(ii) The name, address, and telephone and facsimile numbers of the offeror (and electronic address if available);

(iii) A statement specifying the extent of agreement with all terms, conditions, and provisions included in the solicitation and agreement to furnish any or all items upon which prices are offered at the price set opposite each item;

(iv) Names, titles, and telephone and facsimile numbers (and electronic addresses if available) of persons authorized to negotiate on the offeror's behalf with the Government in connection with this solicitation; and

(v) Name, title, and signature of person authorized to sign the proposal. Proposals signed by an agent shall be accompanied by evidence of that agent's authority, unless that evidence has been previously furnished to the issuing office.

(3) Submission, modification, or revision, of proposals.

(i) Offerors are responsible for submitting proposals, and any modifications, or revisions, so as to reach the Government office designated in the solicitation by the time specified in the solicitation. If no time is specified in the solicitation, the time for receipt is 4:30 p.m., local time, for the designated Government office on the date that proposal or revision is due.

(ii)(A) Any proposal, modification, or revision received at the Government office designated in the solicitation after the exact time specified for receipt of offers is “late” and will not be considered unless it is received before award is made, the Contracting Officer determines that accepting the late offer would not unduly delay the acquisition; and--

(1) If it was transmitted through an electronic commerce method authorized by the solicitation, it was received at the initial point of entry to the Government infrastructure not later than 5:00 p.m. one working day prior to the date specified for receipt of proposals; or

(2) There is acceptable evidence to establish that it was received at the Government installation designated for receipt of offers and was under the Government's control prior to the time set for receipt of offers; or

(3) It is the only proposal received.

(B) However, a late modification of an otherwise successful proposal that makes its terms more favorable to the Government, will be considered at any time it is received and may be accepted.

(iii) Acceptable evidence to establish the time of receipt at the Government installation includes the time/date stamp of that installation on the proposal wrapper, other documentary evidence of receipt maintained by the installation, or oral testimony or statements of Government personnel.

(iv) If an emergency or unanticipated event interrupts normal Government processes so that proposals cannot be received at the office designated for receipt of proposals by the exact time specified in the solicitation, and urgent Government requirements preclude amendment of the solicitation, the time specified for receipt of proposals will be deemed to be extended to the same time of day specified in the solicitation on the first work day on which normal Government processes resume.

(v) Proposals may be withdrawn by written notice received at any time before award. Oral proposals in response to oral solicitations may be withdrawn orally. If the solicitation authorizes facsimile proposals, proposals may be withdrawn via facsimile received at any time before award, subject to the conditions specified in the provision at 52.215-5, Facsimile Proposals. Proposals may be withdrawn in person by an offeror or an authorized representative, if the identity of the person requesting withdrawal is established and the person signs a receipt for the proposal before award.

(4) Unless otherwise specified in the solicitation, the offeror may propose to provide any item or combination of items.

(5) Offerors shall submit proposals in response to this solicitation in English, unless otherwise permitted by the solicitation, and in U.S. dollars, unless the provision at FAR 52.225-17, Evaluation of Foreign Currency Offers, is included in the solicitation.

(6) Offerors may submit modifications to their proposals at any time before the solicitation closing date and time, and may submit modifications in response to an amendment, or to correct a mistake at any time before award.

(7) Offerors may submit revised proposals only if requested or allowed by the Contracting Officer.

(8) Proposals may be withdrawn at any time before award. Withdrawals are effective upon receipt of notice by the Contracting Officer.

(d) Offer expiration date. Proposals in response to this solicitation will be valid for the number of days specified on the solicitation cover sheet (unless a different period is proposed by the offeror).

(e) Restriction on disclosure and use of data. Offerors that include in their proposals data that they do not want disclosed to the public for any purpose, or used by the Government except for evaluation purposes, shall--

(1) Mark the title page with the following legend: This proposal includes data that shall not be disclosed outside the Government and shall not be duplicated, used, or disclosed--in whole or in part--for any purpose other than to evaluate this proposal. If, however, a contract is awarded to this offeror as a result of--or in connection with-- the submission of this data, the Government shall have the right to duplicate, use, or disclose the data to the extent provided in the resulting contract. This restriction does not limit the Government's right to use information contained in this data if it is obtained from another source without restriction. The data subject to this restriction are contained in sheets [insert numbers or other identification of sheets]; and

(2) Mark each sheet of data it wishes to restrict with the following legend: Use or disclosure of data contained on this sheet is subject to the restriction on the title page of this proposal.

(f) Contract award. (1) The Government intends to award a contract or contracts resulting from this solicitation to the responsible offeror(s) whose proposal(s) represents the best value after evaluation in accordance with the factors and subfactors in the solicitation.

(2) The Government may reject any or all proposals if such action is in the Government's interest.

(3) The Government may waive informalities and minor irregularities in proposals received.

(4) The Government intends to evaluate proposals and award a contract without discussions with offerors (except clarifications as described in FAR 15.306(a)). Therefore, the offeror's initial proposal should contain the offeror's best terms from a cost or price and technical standpoint. The Government reserves the right to conduct discussions if the Contracting Officer later determines them to be necessary. If the Contracting Officer determines that the number of proposals that would otherwise be in the competitive range exceeds the number at which an efficient competition can be conducted, the Contracting Officer may limit the number of proposals in the competitive range to the greatest number that will permit an efficient competition among the most highly rated proposals.

(5) The Government reserves the right to make an award on any item for a quantity less than the quantity offered, at the unit cost or prices offered, unless the offeror specifies otherwise in the proposal.

(6) The Government reserves the right to make multiple awards if, after considering the additional administrative costs, it is in the Government's best interest to do so.

(7) Exchanges with offerors after receipt of a proposal do not constitute a rejection or counteroffer by the Government.

(8) The Government may determine that a proposal is unacceptable if the prices proposed are materially unbalanced between line items or subline items. Unbalanced pricing exists when, despite an acceptable total evaluated price, the price of one or more contract line items is significantly overstated or understated as indicated by the application of cost or price analysis techniques. A proposal may be rejected if the Contracting Officer determines that the lack of balance poses an unacceptable risk to the Government.

(9) If a cost realism analysis is performed, cost realism may be considered by the source selection authority in evaluating performance or schedule risk.

(10) A written award or acceptance of proposal mailed or otherwise furnished to the successful offeror within the time specified in the proposal shall result in a binding contract without further action by either party.

(11) If a post-award debriefing is given to requesting offerors, the Government shall disclose the following information, if applicable:

(i) The agency's evaluation of the significant weak or deficient factors in the debriefed offeror's offer.

(ii) The overall evaluated cost or price and technical rating of the successful and the debriefed offeror and past performance information on the debriefed offeror.

(iii) The overall ranking of all offerors, when any ranking was developed by the agency during source selection.

(iv) A summary of the rationale for award.

(v) For acquisitions of commercial items, the make and model of the item to be delivered by the successful offeror.

(vi) Reasonable responses to relevant questions posed by the debriefed offeror as to whether source-selection procedures set forth in the solicitation, applicable regulations, and other applicable authorities were followed by the agency.

(End of provision)

52.215-20 REQUIREMENTS FOR COST OR PRICING DATA OR INFORMATION OTHER THAN COST OR PRICING DATA (OCT 1997)

(a) Exceptions from cost or pricing data. (1) In lieu of submitting cost or pricing data, offerors may submit a written request for exception by submitting the information described in the following subparagraphs. The Contracting Officer may require additional supporting information, but only to the extent necessary to determine whether an exception should be granted, and whether the price is fair and reasonable.

(i) Identification of the law or regulation establishing the price offered. If the price is controlled under law by periodic rulings, reviews, or similar actions of a governmental body, attach a copy of the controlling document, unless it was previously submitted to the contracting office.

(ii) Commercial item exception. For a commercial item exception, the offeror shall submit, at a minimum, information on prices at which the same item or similar items have previously been sold in the commercial market that is adequate for evaluating the reasonableness of the price for this acquisition. Such information may include--

(A) For catalog items, a copy of or identification of the catalog and its date, or the appropriate pages for the offered items, or a statement that the catalog is on file in the buying office to which the proposal is being submitted. Provide a copy or describe current discount policies and price lists (published or unpublished), e.g., wholesale, original equipment manufacturer, or reseller. Also explain the basis of each offered price and its relationship to the established catalog price, including how the proposed price relates to the price of recent sales in quantities similar to the proposed quantities;

(B) For market-priced items, the source and date or period of the market quotation or other basis for market price, the base amount, and applicable discounts. In addition, describe the nature of the market;

(C) For items included on an active Federal Supply Service Multiple Award Schedule contract, proof that an exception has been granted for the schedule item.

(2) The offeror grants the Contracting Officer or an authorized representative the right to examine, at any time before award, books, records, documents, or other directly pertinent records to verify any request for an exception under this provision, and the reasonableness of price. For items priced using catalog or market prices, or law or regulation , access does not extend to cost or profit information or other data relevant solely to the offeror's determination of the prices to be offered in the catalog or marketplace.

(b) Requirements for cost or pricing data. If the offeror is not granted an exception from the requirement to submit cost or pricing data, the following applies:

(1) The offeror shall prepare and submit cost or pricing data and supporting attachments in accordance with Table 15-2 of FAR 15.408.

As soon as practicable after agreement on price, but before contract award (except for unpriced actions such as letter contracts), the offeror shall submit a Certificate of Current Cost or Pricing Data, as prescribed by FAR 15.406-2.

(End of provision)

52.216-1 TYPE OF CONTRACT (APR 1984)

The Government contemplates award of a FIRM-FIXED PRICE contract resulting from this solicitation.

(End of clause)

52.222-23 NOTICE OF REQUIREMENT FOR AFFIRMATIVE ACTION TO ENSURE EQUAL EMPLOYMENT OPPORTUNITY FOR CONSTRUCTION (FEB 1999)

(a) The offeror's attention is called to the Equal Opportunity clause and the Affirmative Action Compliance Requirements for Construction clause of this solicitation.

(b) The goals for minority and female participation, expressed in percentage terms for the Contractor's aggregate workforce in each trade on all construction work in the covered area, are as follows:

| Goals for minority participation for each trade | Goals for female participation for each trade |
|---|---|
| N/A | N/A |

These goals are applicable to all the Contractor's construction work performed in the covered area. If the Contractor performs construction work in a geographical area located outside of the covered area, the Contractor shall apply the goals established for the geographical area where the work is actually performed. Goals are published periodically in the Federal Register in notice form, and these notices may be obtained from any Office of Federal Contract Compliance Programs office.

(c) The Contractor's compliance with Executive Order 11246, as amended, and the regulations in 41 CFR 60-4 shall be based on (1) its implementation of the Equal Opportunity clause, (2) specific affirmative action obligations required by the clause entitled "Affirmative Action Compliance Requirements for Construction," and (3) its efforts to meet the goals. The hours of minority and female employment and training must be substantially uniform throughout the length of the contract, and in each trade. The Contractor shall make a good faith effort to employ minorities and women evenly on each of its projects. The transfer of minority or female employees or trainees from Contractor to Contractor, or from project to project, for the sole purpose of meeting the Contractor's goals shall be a violation of the contract, Executive Order 11246, as amended, and the regulations in 41 CFR 60-4. Compliance with the goals will be measured against the total work hours performed.

(d) The Contractor shall provide written notification to the Deputy Assistant Secretary for Federal Contract Compliance, U.S. Department of Labor, within 10 working days following award of any construction subcontract in excess of $10,000 at any tier for construction work under the contract resulting from this solicitation. The notification shall list the --

(1) Name, address, and telephone number of the subcontractor;

(2) Employer's identification number of the subcontractor;

(3) Estimated dollar amount of the subcontract;

(4) Estimated starting and completion dates of the subcontract; and

(5) Geographical area in which the subcontract is to be performed.

(e) As used in this Notice, and in any contract resulting from this solicitation, the "covered area" is facilities in the Jawzjan and Sar-i-Pol provinces of Afghanistan.

(End of provision)

52.233-2 SERVICE OF PROTEST (SEP 2006)

(a) Protests, as defined in section 33.101 of the Federal Acquisition Regulation, that are filed directly with an agency, and copies of any protests that are filed with the Government Accountability Office (GAO), shall be served on the Contracting Officer (addressed as follows) by obtaining written and dated acknowledgment of receipt from **U. S. Army Corps of Engineers, House 1, Street 1, West Wazir Akbar Khan (behind Aman High School), Kabul, Afghanistan.**

(b) The copy of any protest shall be received in the office designated above within one day of filing a protest with the GAO.

(End of provision)

52.236-27 SITE VISIT (CONSTRUCTION) (FEB 1995) – ALTERNATE I (FEB 1995)

(a) The clauses at 52.236-2, Differing Site Conditions, and 52.236-3, Site Investigations and Conditions Affecting the Work, will be included in any contract awarded as a result of this solicitation. Accordingly, offerors or quoters are urged and expected to inspect the site where the work will be performed.

**NO SITE VISIT SCHEDULED. Offerors are urged and expected to inspect the site where the work will be performed.**

(End of provision)

52.236-28 PREPARATION OF PROPOSALS--CONSTRUCTION (OCT 1997)

(a) Proposals must be (1) submitted on the forms furnished by the Government or on copies of those forms, and (2) manually signed. The person signing a proposal must initial each erasure or change appearing on any proposal form.

(b) The proposal form may require offerors to submit proposed prices for one or more items on various bases, including--

(1) Lump sum price;

(2) Alternate prices;

(3) Units of construction; or

(4) Any combination of paragraphs (b)(1) through (b)(3) of this provision.

(c) If the solicitation requires submission of a proposal on all items, failure to do so may result in the proposal being rejected without further consideration. If a proposal on all items is not required, offerors should insert the words “no proposal” in the space provided for any item on which no price is submitted.

(d) Alternate proposals will not be considered unless this solicitation authorizes their submission.

(End of provision)

52.252-5 AUTHORIZED DEVIATIONS IN PROVISIONS (APR 1984)

(a) The use in this solicitation of any Federal Acquisition Regulation (48 CFR Chapter 1) provision with an authorized deviation is indicated by the addition of"(DEVIATION)" after the date of the provision.

(b) The use in this solicitation of any **Defense FAR Supplement** (48 CFR Chapter 2) provision with an authorized deviation is indicated by the addition of "(DEVIATION)" after the name of the regulation.

(End of provision)

252.204-7001 COMMERCIAL AND GOVERNMENT ENTITY (CAGE) CODE REPORTING (AUG 1999)

(a) The offeror is requested to enter its CAGE code on its offer in the block with its name and address. The CAGE code entered must be for that name and address. Enter “CAGE” before the number.

(b) If the offeror does not have a CAGE code, it may ask the Contracting Officer to request one from the Defense Logistics Information Service (DLIS). The Contracting Officer will--

(1) Ask the Contractor to complete section B of a DD Form 2051, Request for Assignment of a Commercial and Government Entity (CAGE) Code;

(2) Complete section A and forward the form to DLIS; and

(3) Notify the Contractor of its assigned CAGE code.

(c) Do not delay submission of the offer pending receipt of a CAGE code.

(End of provision)

Section 00600 - Representations & Certifications

CLAUSES INCORPORATED BY FULL TEXT

52.203-2 CERTIFICATE OF INDEPENDENT PRICE DETERMINATION (APR 1985)

(a) The offeror certifies that --

(1) The prices in this offer have been arrived at independently, without, for the purpose of restricting competition, any consultation, communication, or agreement with any other offeror or competitor relating to –

(i) Those prices,

(ii) The intention to submit an offer, or

(iii) The methods of factors used to calculate the prices offered:

(2) The prices in this offer have not been and will not be knowingly disclosed by the offeror, directly or indirectly, to any other offeror or competitor before bid opening (in the case of a sealed bid solicitation) or contract award (in the case of a negotiated solicitation) unless otherwise required by law; and

(3) No attempt has been made or will be made by the offeror to induce any other concern to submit or not to submit an offer for the purpose of restricting competition.

(b) Each signature on the offer is considered to be a certification by the signatory that the signatory --

(1) Is the person in the offeror's organization responsible for determining the prices offered in this bid or proposal, and that the signatory has not participated and will not participate in any action contrary to subparagraphs (a)(1) through (a)(3) of this provision; or

(2) (i) Has been authorized, in writing, to act as agent for the following principals in certifying that those principals have not participated, and will not participate in any action contrary to subparagraphs (a)(1) through (a)(3) of this provison _____ (insert full name of person(s) in the offeror's organization responsible for determining the prices offered in this bid or proposal, and the title of his or her position in the offeror's organization);

(ii) As an authorized agent, does certify that the principals named in subdivision (b)(2)(i) above have not participated, and will not participate, in any action contrary to subparagraphs (a)(1) through (a)(3) above; and

(iii) As an agent, has not personally participated, and will not participate, in any action contrary to subparagraphs (a)(1) through (a)(3) of this provision.

(c) If the offeror deletes or modifies subparagraph (a)(2) of this provision, the offeror must furnish with its offer a signed statement setting forth in detail the circumstances of the disclosure.

(End of clause)

CLAUSES INCORPORATED BY FULL TEXT

52.203-11 CERTIFICATION AND DISCLOSURE REGARDING PAYMENTS TO INFLUENCE CERTAIN FEDERAL TRANSACTIONS (SEP 2005)

(a) The definitions and prohibitions contained in the clause, at FAR 52.203-12, Limitation on Payments to Influence Certain Federal Transactions, included in this solicitation, are hereby incorporated by reference in paragraph (b) of this Certification.

(b) The offeror, by signing its offer, hereby certifies to the best of his or her knowledge and belief that on or after December 23, 1989,--

(1) Federal appropriated funds have been paid or will be paid to any person for influencing or attempting to influence an officer or employee of any agency, a Member of Congress, an officer or employee of Congress, or an employee of a Member of Congress on his or her behalf in connection with the awarding of this contract.

(2) If any funds other than Federal appropriated funds (including profit or fee received under a covered Federal transaction) have been paid, or will be paid to any person for influencing or attempting to influence an officer or employee of any agency, a Member of Congress, an officer or employee of Congress or an employee of a Member of Congress on his or her behalf in connection with this solicitation, the offeror shall complete and submit, with its offer, OMB standard form LLL, Disclosure of Lobbying Activities, to the Contracting Officer; and

(3) He or she will include the language of this certification in all subcontract awards at any tier and require that all recipients of subcontract awards in excess of $100,000 shall certify and disclose accordingly.

(c) Submission of this certification and disclosure is a prerequisite for making or entering into this contract imposed by section 1352, title 31, United States Code. Any person who makes an expenditure prohibited under this provision, shall be subject to a civil penalty of not less than $10,000, and not more than $100,000, for each such failure.

(End of provision)

52.204-3 TAXPAYER IDENTIFICATION (OCT 1998)

(a) Definitions.

Common parent, as used in this provision, means that corporate entity that owns or controls an affiliated group of corporations that files its Federal income tax returns on a consolidated basis, and of which the offeror is a member.

Taxpayer Identification Number (TIN), as used in this provision, means the number required by the Internal Revenue Service (IRS) to be used by the offeror in reporting income tax and other returns. The TIN may be either a Social Security Number or an Employer Identification Number.

(b) All offerors must submit the information required in paragraphs (d) through (f) of this provision to comply with debt collection requirements of 31 U.S.C. 7701(c) and 3325(d), reporting requirements of 26 U.S.C. 6041, 6041A, and 6050M, and implementing regulations issued by the IRS. If the resulting contract is subject to the payment reporting requirements described in Federal Acquisition Regulation (FAR) 4.904, the failure or refusal by the offeror to furnish the information may result in a 31 percent reduction of payments otherwise due under the contract.

(c) The TIN may be used by the Government to collect and report on any delinquent amounts arising out of the offeror's relationship with the Government (31 U.S.C. 7701(c)(3)). If the resulting contract is subject to the payment

reporting requirements described in FAR 4.904, the TIN provided hereunder may be matched with IRS records to verify the accuracy of the offeror's TIN.

(d) Taxpayer Identification Number (TIN).

___ TIN:.----------

___ TIN has been applied for.

___ TIN is not required because:

___ Offeror is a nonresident alien, foreign corporation, or foreign partnership that does not have income effectively connected with the conduct of a trade or business in the United States and does not have an office or place of business or a fiscal paying agent in the United States;

___ Offeror is an agency or instrumentality of a foreign government;

___ Offeror is an agency or instrumentality of the Federal Government.

(e) Type of organization.

___ Sole proprietorship;

___ Partnership;

___ Corporate entity (not tax-exempt);

___ Corporate entity (tax-exempt);

___ Government entity (Federal, State, or local);

___ Foreign government;

___ International organization per 26 CFR 1.6049-4;

___ Other----------

(f) Common parent.

___ Offeror is not owned or controlled by a common parent as defined in paragraph (a) of this provision.

___ Name and TIN of common parent:

Name----------

TIN----------

(End of provision)

52.204-8 ANNUAL REPRESENTATIONS AND CERTIFICATIONS (JAN 2006)

(a)(1) The North American Industry Classification System (NAICS) code for this acquisition is ---------- [insert NAICS code].

(2) The small business size standard is ---------- [insert size standard].

(3) The small business size standard for a concern which submits an offer in its own name, other than on a construction or service contract, but which proposes to furnish a product which it did not itself manufacture, is 500 employees.

(b)(1) If the clause at 52.204-7, Central Contractor Registration, is included in this solicitation, paragraph (c) of this provision applies.

(2) If the clause at 52.204-7 is not included in this solicitation, and the offeror is currently registered in CCR, and has completed the ORCA electronically, the offeror may choose to use paragraph (b) of this provision instead of completing the corresponding individual representations and certifications in the solicitation. The offeror shall indicate which option applies by checking one of the following boxes:

(__) Paragraph (c) applies.

(__) Paragraph (c) does not apply and the offeror has completed the individual representations and certifications in the solicitation.

(c) The offeror has completed the annual representations and certifications electronically via the Online Representations and Certifications Application (ORCA) website at http://orca.bpn.gov. After reviewing the ORCA database information, the offeror verifies by submission of the offer that the representations and certifications currently posted electronically have been entered or updated within the last 12 months, are current, accurate, complete, and applicable to this solicitation (including the business size standard applicable to the NAICS code referenced for this solicitation), as of the date of this offer and are incorporated in this offer by reference (see FAR 4.1201); except for the changes identified below [offeror to insert changes, identifying change by clause number, title, date]. These amended representation(s) and/or certification(s) are also incorporated in this offer and are current, accurate, and complete as of the date of this offer.

| FAR Clause | Title | Date | Change |
|---|---|---|---|

Any changes provided by the offeror are applicable to this solicitation only, and do not result in an update to the representations and certifications posted on ORCA.

(End of Provision)

52.209-5 CERTIFICATION REGARDING DEBARMENT, SUSPENSION, PROPOSED DEBARMENT, AND OTHER RESPONSIBILITY MATTERS (DEC 2001)

(a)(1) The Offeror certifies, to the best of its knowledge and belief, that-

(i) The Offeror and/or any of its Principals-

(A) Are ( ) are not ( ) presently debarred, suspended, proposed for debarment, or declared ineligible for the award of contracts by any Federal agency;

(B) Have ( ) have not ( ), within a three-year period preceding this offer, been convicted of or had a civil judgment rendered against them for: commission of fraud or a criminal offense in connection with obtaining, attempting to obtain, or performing a public (Federal, state, or local) contract or subcontract; violation of Federal or state antitrust statutes relating to the submission of offers; or commission of embezzlement, theft, forgery, bribery, falsification or destruction of records, making false statements, tax evasion, or receiving stolen property; and

(C) Are ( ) are not ( ) presently indicted for, or otherwise criminally or civilly charged by a governmental entity with, commission of any of the offenses enumerated in paragraph (a)(1)(i)(B) of this provision.

(ii) The Offeror has ( ) has not ( ), within a three-year period preceding this offer, had one or more contracts terminated for default by any Federal agency.

(2) "Principals," for the purposes of this certification, means officers; directors; owners; partners; and, persons having primary management or supervisory responsibilities within a business entity (e.g., general manager; plant manager; head of a subsidiary, division, or business segment, and similar positions).

This Certification Concerns a Matter Within the Jurisdiction of an Agency of the United States and the Making of a False, Fictitious, or Fraudulent Certification May Render the Maker Subject to Prosecution Under Section 1001, Title 18, United States Code.

(b) The Offeror shall provide immediate written notice to the Contracting Officer if, at any time prior to contract award, the Offeror learns that its certification was erroneous when submitted or has become erroneous by reason of changed circumstances.

(c) A certification that any of the items in paragraph (a) of this provision exists will not necessarily result in withholding of an award under this solicitation. However, the certification will be considered in connection with a determination of the Offeror's responsibility. Failure of the Offeror to furnish a certification or provide such additional information as requested by the Contracting Officer may render the Offeror nonresponsible.

(d) Nothing contained in the foregoing shall be construed to require establishment of a system of records in order to render, in good faith, the certification required by paragraph (a) of this provision. The knowledge and information of an Offeror is not required to exceed that which is normally possessed by a prudent person in the ordinary course of business dealings.

(e) The certification in paragraph (a) of this provision is a material representation of fact upon which reliance was placed when making award. If it is later determined that the Offeror knowingly rendered an erroneous certification, in addition to other remedies available to the Government, the Contracting Officer may terminate the contract resulting from this solicitation for default.

(End of provision)

52.222-22 PREVIOUS CONTRACTS AND COMPLIANCE REPORTS (FEB 1999)

The offeror represents that --

(a) ( ) It has, ( ) has not participated in a previous contract or subcontract subject to the Equal Opportunity clause of this solicitation;

(b) ( ) It has, ( ) has not, filed all required compliance reports; and

(c) Representations indicating submission of required compliance reports, signed by proposed subcontractors, will be obtained before subcontract awards.

(End of provision)

52.222-38 COMPLIANCE WITH VETERANS' EMPLOYMENT REPORTING REQUIREMENTS (DEC 2001)

By submission of its offer, the offeror represents that, if it is subject to the reporting requirements of 38 U.S.C. 4212(d) (i.e., if it has any contract containing Federal Acquisition Regulation clause 52.222-37, Employment Reports on Special Disabled Veterans, Veterans of the Vietnam Era, and Other Eligible Veterans), it has submitted the most recent VETS-100 Report required by that clause.

(End of provision)

52.230-1 COST ACCOUNTING STANDARDS NOTICES AND CERTIFICATION (JUN 2000)

Note: This notice does not apply to small businesses or foreign governments. This notice is in three parts, identified by Roman numerals I through III.

Offerors shall examine each part and provide the requested information in order to determine Cost Accounting Standards (CAS) requirements applicable to any resultant contract.

If the offeror is an educational institution, Part II does not apply unless the contemplated contract will be subject to full or modified CAS coverage pursuant to 48 CFR 9903.201-2(c)(5) or 9903.201-2(c)(6), respectively.

I. DISCLOSURE STATEMENT--COST ACCOUNTING PRACTICES AND CERTIFICATION

(a) Any contract in excess of $500,000 resulting from this solicitation will be subject to the requirements of the Cost Accounting Standards Board (48 CFR Chapter 99), except for those contracts which are exempt as specified in 48 CFR 9903.201-1.

(b) Any offeror submitting a proposal which, if accepted, will result in a contract subject to the requirements of 48 CFR Chapter 99 must, as a condition of contracting, submit a Disclosure Statement as required by 48 CFR 9903.202. When required, the Disclosure Statement must be submitted as a part of the offeror's proposal under this solicitation unless the offeror has already submitted a Disclosure Statement disclosing the practices used in connection with the pricing of this proposal. If an applicable Disclosure Statement has already been submitted, the offeror may satisfy the requirement for submission by providing the information requested in paragraph (c) of Part I of this provision.

CAUTION: In the absence of specific regulations or agreement, a practice disclosed in a Disclosure Statement shall not, by virtue of such disclosure, be deemed to be a proper, approved, or agreed-to practice for pricing proposals or accumulating and reporting contract performance cost data.

(c) Check the appropriate box below:

(1) Certificate of Concurrent Submission of Disclosure Statement.

The offeror hereby certifies that, as a part of the offer, copies of the Disclosure Statement have been submitted as follows: (i) original and one copy to the cognizant Administrative Contracting Officer (ACO) or cognizant Federal agency official authorized to act in that capacity (Federal official), as applicable, and (ii) one copy to the cognizant Federal auditor.

(Disclosure must be on Form No. CASB DS-1 or CASB DS-2, as applicable. Forms may be obtained from the cognizant ACO or Federal official and/or from the loose-leaf version of the Federal Acquisition Regulation.)

Date of Disclosure Statement: _____ Name and Address of Cognizant ACO or Federal Official Where Filed: _____

The offeror further certifies that the practices used in estimating costs in pricing this proposal are consistent with the cost accounting practices disclosed in the Disclosure Statement.

(2) Certificate of Previously Submitted Disclosure Statement.

The offeror hereby certifies that the required Disclosure Statement was filed as follows:

Date of Disclosure Statement: _____ Name and Address of Cognizant ACO or Federal Official Where Filed: _____

The offeror further certifies that the practices used in estimating costs in pricing this proposal are consistent with the cost accounting practices disclosed in the applicable Disclosure Statement.

(3) Certificate of Monetary Exemption.

The offeror hereby certifies that the offeror, together with all divisions, subsidiaries, and affiliates under common control, did not receive net awards of negotiated prime contracts and subcontracts subject to CAS totaling more than $50 million (of which at least one award exceeded $1 million) in the cost accounting period immediately preceding the period in which this proposal was submitted. The offeror further certifies that if such status changes before an award resulting from this proposal, the offeror will advise the Contracting Officer immediately.

(4) Certificate of Interim Exemption.

The offeror hereby certifies that (i) the offeror first exceeded the monetary exemption for disclosure, as defined in (3) of this subsection, in the cost accounting period immediately preceding the period in which this offer was submitted and (ii) in accordance with 48 CFR 9903.202-1, the offeror is not yet required to submit a Disclosure Statement. The offeror further certifies that if an award resulting from this proposal has not been made within 90 days after the end of that period, the offeror will immediately submit a revised certificate to the Contracting Officer, in the form specified under subparagraph (c)(1) or (c)(2) of Part I of this provision, as appropriate, to verify submission of a completed Disclosure Statement.

CAUTION: Offerors currently required to disclose because they were awarded a CAS-covered prime contract or subcontract of $50 million or more in the current cost accounting period may not claim this exemption (4). Further, the exemption applies only in connection with proposals submitted before expiration of the 90-day period following the cost accounting period in which the monetary exemption was exceeded.

II. COST ACCOUNTING STANDARDS--ELIGIBILITY FOR MODIFIED CONTRACT COVERAGE

If the offeror is eligible to use the modified provisions of 48 CFR 9903.201-2(b) and elects to do so, the offeror shall indicate by checking the box below. Checking the box below shall mean that the resultant contract is subject to the Disclosure and Consistency of Cost Accounting Practices clause in lieu of the Cost Accounting Standards clause.

( ) The offeror hereby claims an exemption from the Cost Accounting Standards clause under the provisions of 48 CFR 9903.201-2(b) and certifies that the offeror is eligible for use of the Disclosure and Consistency of Cost Accounting Practices clause because during the cost accounting period immediately preceding the period in which this proposal was submitted, the offeror received less than $50 million in awards of CAS-covered prime contracts

and subcontracts. The offeror further certifies that if such status changes before an award resulting from this proposal, the offeror will advise the Contracting Officer immediately.

CAUTION: An offeror may not claim the above eligibility for modified contract coverage if this proposal is expected to result in the award of a CAS-covered contract of $50 million or more or if, during its current cost accounting period, the offeror has been awarded a single CAS-covered prime contract or subcontract of $25 million or more.

III. ADDITIONAL COST ACCOUNTING STANDARDS APPLICABLE TO EXISTING CONTRACTS

The offeror shall indicate below whether award of the contemplated contract would, in accordance with subparagraph (a)(3) of the Cost Accounting Standards clause, require a change in established cost accounting practices affecting existing contracts and subcontracts.

( ) YES ( ) NO

(End of clause)

252.209-7001 DISCLOSURE OF OWNERSHIP OR CONTROL BY THE GOVERNMENT OF A TERRORIST COUNTRY (OCT 2006)

(a) "Definitions."

As used in this provision --

(a) "Government of a terrorist country" includes the state and the government of a terrorist country, as well as any political subdivision, agency, or instrumentality thereof.

(2) "Terrorist country" means a country determined by the Secretary of State, under section 6(j)(1)(A) of the Export Administration Act of 1979 (50 U.S.C. App. 2405(j)(i)(A)), to be a country the government of which has repeatedly provided support for such acts of international terrorism. As of the date of this provision, terrorist countries subject to this provision include: Cuba, Iran, North Korea, Sudan, and Syria.

(3) "Significant interest" means --

(i) Ownership of or beneficial interest in 5 percent or more of the firm's or subsidiary's securities. Beneficial interest includes holding 5 percent or more of any class of the firm's securities in "nominee shares," "street names," or some other method of holding securities that does not disclose the beneficial owner;

(ii) Holding a management position in the firm, such as a director or officer;

(iii) Ability to control or influence the election, appointment, or tenure of directors or officers in the firm;

(iv) Ownership of 10 percent or more of the assets of a firm such as equipment, buildings, real estate, or other tangible assets of the firm; or

(v) Holding 50 percent or more of the indebtness of a firm.

(b) "Prohibition on award."

In accordance with 10 U.S.C. 2327, no contract may be awarded to a firm or a subsidiary of a firm if the

government of a terrorist country has a significant interest in the firm or subsidiary or, in the case of a subsidiary, the firm that owns the subsidiary, unless a waiver is granted by the Secretary of Defense.

(c) "Disclosure."

If the government of a terrorist country has a significant interest in the Offeror or a subsidiary of the Offeror, the Offeror shall disclosure such interest in an attachment to its offer. If the Offeror is a subsidiary, it shall also disclose any significant interest the government of a terrorist country has in any firm that owns or controls the subsidiary. The disclosure shall include --

(1) Identification of each government holding a significant interest; and

(2) A description of the significant interest held by each government.

(End of provision)

252.225-7031 SECONDARY ARAB BOYCOTT OF ISRAEL (JUN 2005)

(a) Definitions. As used in this provision--

(1) Foreign person means any person (including any individual, partnership, corporation, or other form of association) other than a United States person.

(2) United States means the 50 States, the District of Columbia, outlying areas, and the outer Continental Shelf as defined in 43 U.S.C. 1331.

(3) United States person is defined in 50 U.S.C. App. 2415(2) and means--

(i) Any United States resident or national (other than an individual resident outside the United States who is employed by other than a United States person);

(ii) Any domestic concern (including any permanent domestic establishment of any foreign concern); and

(iii) Any foreign subsidiary or affiliate (including any permanent foreign establishment) of any domestic concern that is controlled in fact by such domestic concern.

(b) Certification. If the offeror is a foreign person, the offeror certifies, by submission of an offer, that it--

(1) Does not comply with the Secondary Arab Boycott of Israel; and

(2) Is not taking or knowingly agreeing to take any action, with respect to the Secondary Boycott of Israel by Arab countries, which 50 U.S.C. App. 2407(a) prohibits a United States person from taking.

(End of provision)

252.247-7022 REPRESENTATION OF EXTENT OF TRANSPORTATION BY SEA (AUG 1992)

(a) The Offeror shall indicate by checking the appropriate blank in paragraph (b) of this provision whether transportation of supplies by sea is anticipated under the resultant contract. The term supplies is defined in the

Transportation of Supplies by Sea clause of this solicitation.

(b) Representation. The Offeror represents that it:

____ (1) Does anticipate that supplies will be transported by sea in the performance of any contract or subcontract resulting from this solicitation.

____ (2) Does not anticipate that supplies will be transported by sea in the performance of any contract or subcontract resulting from this solicitation.

(c) Any contract resulting from this solicitation will include the Transportation of Supplies by Sea clause. If the Offeror represents that it will not use ocean transportation, the resulting contract will also include the Defense FAR Supplement clause at 252.247-7024, Notification of Transportation of Supplies by Sea.

(End of provision)

Section 00700 - Contract Clauses

CLAUSES INCORPORATED BY FULL TEXT

52.202-1 DEFINITIONS (JUL 2004)

(a) When a solicitation provision or contract clause uses a word or term that is defined in the Federal Acquisition Regulation (FAR), the word or term has the same meaning as the definition in FAR 2.101 in effect at the time the solicitation was issued, unless--

(1) The solicitation, or amended solicitation, provides a different definition;

(2) The contracting parties agree to a different definition;

(3) The part, subpart, or section of the FAR where the provision or clause is prescribed provides a different meaning; or

(4) The word or term is defined in FAR Part 31, for use in the cost principles and procedures.

(b) The FAR Index is a guide to words and terms the FAR defines and shows where each definition is located. The FAR Index is available via the Internet at http://www.acqnet.gov at the end of the FAR, after the FAR Appendix.

(End of clause)

CLAUSES INCORPORATED BY FULL TEXT

52.203-3 GRATUITIES (APR 1984)

(a) The right of the Contractor to proceed may be terminated by written notice if, after notice and hearing, the agency head or a designee determines that the Contractor, its agent, or another representative--

(1) Offered or gave a gratuity (e.g., an entertainment or gift) to an officer, official, or employee of the Government; and

(2) Intended, by the gratuity, to obtain a contract or favorable treatment under a contract.

(b) The facts supporting this determination may be reviewed by any court having lawful jurisdiction.

(c) If this contract is terminated under paragraph (a) of this clause, the Government is entitled--

(1) To pursue the same remedies as in a breach of the contract; and

(2) In addition to any other damages provided by law, to exemplary damages of not less than 3 nor more than 10 times the cost incurred by the Contractor in giving gratuities to the person concerned, as determined by the agency head or a designee. (This subparagraph (c)(2) is applicable only if this contract uses money appropriated to the Department of Defense.)

(d) The rights and remedies of the Government provided in this clause shall not be exclusive and are in addition to any other rights and remedies provided by law or under this contract.

(End of clause)

CLAUSES INCORPORATED BY FULL TEXT

52.203-5 COVENANT AGAINST CONTINGENT FEES (APR 1984)

(a) The Contractor warrants that no person or agency has been employed or retained to solicit or obtain this contract upon an agreement or understanding for a contingent fee, except a bona fide employee or agency. For breach or violation of this warranty, the Government shall have the right to annul this contract without liability or, in its discretion, to deduct from the contract price or consideration, or otherwise recover, the full amount of the contingent fee.

(b) "Bona fide agency," as used in this clause, means an established commercial or selling agency, maintained by a contractor for the purpose of securing business, that neither exerts nor proposes to exert improper influence to solicit or obtain Government contracts nor holds itself out as being able to obtain any Government contract or contracts through improper influence.

"Bona fide employee," as used in this clause, means a person, employed by a contractor and subject to the contractor's supervision and control as to time, place, and manner of performance, who neither exerts nor proposes to exert improper influence to solicit or obtain Government contracts nor holds out as being able to obtain any Government contract or contracts through improper influence.

"Contingent fee," as used in this clause, means any commission, percentage, brokerage, or other fee that is contingent upon the success that a person or concern has in securing a Government contract.

"Improper influence," as used in this clause, means any influence that induces or tends to induce a Government employee or officer to give consideration or to act regarding a Government contract on any basis other than the merits of the matter.

(End of clause)

CLAUSES INCORPORATED BY FULL TEXT

52.203-7 ANTI-KICKBACK PROCEDURES. (JUL 1995)

(a) Definitions.

"Kickback," as used in this clause, means any money, fee, commission, credit, gift, gratuity, thing of value, or compensation of any kind which is provided, directly or indirectly, to any prime Contractor, prime Contractor employee, subcontractor, or subcontractor employee for the purpose of improperly obtaining or rewarding favorable treatment in connection with a prime contract or in connection with a subcontract relating to a prime contract.

"Person," as used in this clause, means a corporation, partnership, business association of any kind, trust, joint-stock company, or individual.

"Prime contract," as used in this clause, means a contract or contractual action entered into by the United States for the purpose of obtaining supplies, materials, equipment, or services of any kind.

"Prime Contractor," as used in this clause, means a person who has entered into a prime contract with the United States.

"Prime Contractor employee," as used in this clause, means any officer, partner, employee, or agent of a prime Contractor.

"Subcontract," as used in this clause, means a contract or contractual action entered into by a prime Contractor or subcontractor for the purpose of obtaining supplies, materials, equipment, or services of any kind under a prime contract.

"Subcontractor," as used in this clause, (1) means any person, other than the prime Contractor, who offers to furnish or furnishes any supplies, materials, equipment, or services of any kind under a prime contract or a subcontract entered into in connection with such prime contract, and (2) includes any person who offers to furnish or furnishes general supplies to the prime Contractor or a higher tier subcontractor.

"Subcontractor employee," as used in this clause, means any officer, partner, employee, or agent of a subcontractor.

(b) The Anti-Kickback Act of 1986 (41 U.S.C. 51-58) (the Act), prohibits any person from -

(1) Providing or attempting to provide or offering to provide any kickback;

(2) Soliciting, accepting, or attempting to accept any kickback; or

(3) Including, directly or indirectly, the amount of any kickback in the contract price charged by a prime Contractor to the United States or in the contract price charged by a subcontractor to a prime Contractor or higher tier subcontractor.

(c)(1) The Contractor shall have in place and follow reasonable procedures designed to prevent and detect possible violations described in paragraph (b) of this clause in its own operations and direct business relationships.

(2) When the Contractor has reasonable grounds to believe that a violation described in paragraph (b) of this clause may have occurred, the Contractor shall promptly report in writing the possible violation. Such reports shall be made to the inspector general of the contracting agency, the head of the contracting agency if the agency does not have an inspector general, or the Department of Justice.

(3) The Contractor shall cooperate fully with any Federal agency investigating a possible violation described in paragraph (b) of this clause.

(4) The Contracting Officer may (i) offset the amount of the kickback against any monies owed by the United States under the prime contract and/or (ii) direct that the Prime Contractor withhold, from sums owed a subcontractor under the prime contract, the amount of any kickback. The Contracting Officer may order the monies withheld under subdivision (c)(4)(ii) of this clause be paid over to the Government unless the Government has already offset those monies under subdivision (c)(4)(i) of this clause. In either case, the Prime Contractor shall notify the Contracting Officer when the monies are withheld.

(5) The Contractor agrees to incorporate the substance of this clause, including this subparagraph (c)(5) but excepting subparagraph (c)(1), in all subcontracts under this contract which exceed $100,000.

CLAUSES INCORPORATED BY FULL TEXT

52.203-8 CANCELLATION, RESCISSION, AND RECOVERY OF FUNDS FOR ILLEGAL OR IMPROPER ACTIVITY (JAN 1997)

(a) If the Government receives information that a contractor or a person has engaged in conduct constituting a violation of subsection (a), (b), (c), or (d) of Section 27 of the Office of Federal Procurement Policy Act (41 U.S.C. 423) (the Act), as amended by section 4304 of the 1996 National Defense Authorization Act for Fiscal Year 1996 (Pub. L. 104-106), the Government may--

(1) Cancel the solicitation, if the contract has not yet been awarded or issued; or

(2) Rescind the contract with respect to which--

(i) The Contractor or someone acting for the Contractor has been convicted for an offense where the conduct constitutes a violation of subsection 27(a) or (b) of the Act for the purpose of either--

(A) Exchanging the information covered by such subsections for anything of value; or

(B) Obtaining or giving anyone a competitive advantage in the award of a Federal agency procurement contract; or

(ii) The head of the contracting activity has determined, based upon a preponderance of the evidence, that the Contractor or someone acting for the Contractor has engaged in conduct constituting an offense punishable under subsections 27(e)(1) of the Act.

(b) If the Government rescinds the contract under paragraph (a) of this clause, the Government is entitled to recover, in addition to any penalty prescribed by law, the amount expended under the contract.

(c) The rights and remedies of the Government specified herein are not exclusive, and are in addition to any other rights and remedies provided by law, regulation, or under this contract.

(End of clause)

CLAUSES INCORPORATED BY FULL TEXT

52.203-10 PRICE OR FEE ADJUSTMENT FOR ILLEGAL OR IMPROPER ACTIVITY (JAN 1997)

(a) The Government, at its election, may reduce the price of a fixed-price type contract and the total cost and fee under a cost-type contract by the amount of profit or fee determined as set forth in paragraph (b) of this clause if the head of the contracting activity or designee determines that there was a violation of subsection 27 (a), (b), or (c) of the Office of Federal Procurement Policy Act, as amended (41 U.S.C. 423), as implemented in section 3.104 of the Federal Acquisition Regulation.

(b) The price or fee reduction referred to in paragraph (a) of this clause shall be--

(1) For cost-plus-fixed-fee contracts, the amount of the fee specified in the contract at the time of award;

(2) For cost-plus-incentive-fee contracts, the target fee specified in the contract at the time of award, notwithstanding any minimum fee or "fee floor" specified in the contract;

(3) For cost-plus-award-fee contracts--

(i) The base fee established in the contract at the time of contract award;

(ii) If no base fee is specified in the contract, 30 percent of the amount of each award fee otherwise payable to the Contractor for each award fee evaluation period or at each award fee determination point.

(4) For fixed-price-incentive contracts, the Government may--

(i) Reduce the contract target price and contract target profit both by an amount equal to the initial target profit specified in the contract at the time of contract award; or

(ii) If an immediate adjustment to the contract target price and contract target profit would have a significant adverse impact on the incentive price revision relationship under the contract, or adversely affect the contract financing provisions, the Contracting Officer may defer such adjustment until establishment of the total final price of the contract. The total final price established in accordance with the incentive price revision provisions of the contract shall be reduced by an amount equal to the initial target profit specified in the contract at the time of contract award and such reduced price shall be the total final contract price.

(5) For firm-fixed-price contracts, by 10 percent of the initial contract price or a profit amount determined by the Contracting Officer from records or documents in existence prior to the date of the contract award.

(c) The Government may, at its election, reduce a prime contractor's price or fee in accordance with the procedures of paragraph (b) of this clause for violations of the Act by its subcontractors by an amount not to exceed the amount of profit or fee reflected in the subcontract at the time the subcontract was first definitively priced.

(d) In addition to the remedies in paragraphs (a) and (c) of this clause, the Government may terminate this contract for default. The rights and remedies of the Government specified herein are not exclusive, and are in addition to any other rights and remedies provided by law or under this contract.

(End of clause)

CLAUSES INCORPORATED BY FULL TEXT

52.203-12 LIMITATION ON PAYMENTS TO INFLUENCE CERTAIN FEDERAL TRANSACTIONS (SEP 2005)

(a) Definitions.

"Agency," as used in this clause, means executive agency as defined in 2.101.

"Covered Federal action," as used in this clause, means any of the following Federal actions:

(1) The awarding of any Federal contract.

(2) The making of any Federal grant.

(3) The making of any Federal loan.

(4) The entering into of any cooperative agreement.

(5) The extension, continuation, renewal, amendment, or modification of any Federal contract, grant, loan, or cooperative agreement.

"Indian tribe" and "tribal organization," as used in this clause, have the meaning provided in section 4 of the Indian Self-Determination and Education Assistance Act (25 U.S.C. 450B) and include Alaskan Natives.

"Influencing or attempting to influence," as used in this clause, means making, with the intent to influence, any communication to or appearance before an officer or employee of any agency, a Member of Congress, an officer or employee of Congress, or an employee of a Member of Congress in connection with any covered Federal action.

"Local government," as used in this clause, means a unit of government in a State and, if chartered, established, or otherwise recognized by a State for the performance of a governmental duty, including a local public authority, a special district, an intrastate district, a council of governments, a sponsor group representative organization, and any other instrumentality of a local government.

"Officer or employee of an agency," as used in this clause, includes the following individuals who are employed by an agency:

(1) An individual who is appointed to a position in the Government under Title 5, United States Code, including a position under a temporary appointment.

(2) A member of the uniformed services, as defined in subsection 101(3),Title 37, United States Code.

(3) A special Government employee, as defined in section 202, Title 18, United States Code.

(4) An individual who is a member of a Federal advisory committee, as defined by the Federal Advisory Committee Act, Title 5, United States Code, appendix 2.

"Person," as used in this clause, means an individual, corporation, company, association, authority, firm, partnership, society, State, and local government, regardless of whether such entity is operated for profit, or not for profit. This term excludes an Indian tribe, tribal organization, or any other Indian organization with respect to expenditures specifically permitted by other Federal law.

"Reasonable compensation," as used in this clause, means, with respect to a regularly employed officer or employee of any person, compensation that is consistent with the normal compensation for such officer or employee for work that is not furnished to, not funded by, or not furnished in cooperation with the Federal Government.

"Reasonable payment," as used in this clause, means, with respect to professional and other technical services, a payment in an amount that is consistent with the amount normally paid for such services in the private sector.

"Recipient," as used in this clause, includes the Contractor and all subcontractors. This term excludes an Indian tribe, tribal organization, or any other Indian organization with respect to expenditures specifically permitted by other Federal law.

"Regularly employed," as used in this clause, means, with respect to an officer or employee of a person requesting or receiving a Federal contract, an officer or employee who is employed by such person for at least 130 working days within 1 year immediately preceding the date of the submission that initiates agency consideration of such person for receipt of such contract. An officer or employee who is employed by such person for less than 130 working days within 1 year immediately preceding the date of the submission that initiates agency consideration of such person shall be considered to be regularly employed as soon as he or she is employed by such person for 130 working days.

State, as used in this clause, means a State of the United States, the District of Columbia, or an outlying area of the United States, an agency or instrumentality of a State, and multi-State, regional, or interstate entity having governmental duties and powers.

(b) Prohibitions.

(1) Section 1352 of Title 31, United States Code, among other things, prohibits a recipient of a Federal contract, grant, loan, or cooperative agreement from using appropriated funds to pay any person for influencing or attempting

to influence an officer or employee of any agency, a Member of Congress, an officer or employee of Congress, or an employee of a Member of Congress in connection with any of the following covered Federal actions: the awarding of any Federal contract; the making of any Federal grant; the making of any Federal loan; the entering into of any cooperative agreement; or the modification of any Federal contract, grant, loan, or cooperative agreement.

(2) The Act also requires Contractors to furnish a disclosure if any funds other than Federal appropriated funds (including profit or fee received under a covered Federal transaction) have been paid, or will be paid, to any person for influencing or attempting to influence an officer or employee of any agency, a Member of Congress, an officer or employee of Congress, or an employee of a Member of Congress in connection with a Federal contract, grant, loan, or cooperative agreement.

(3) The prohibitions of the Act do not apply under the following conditions:

(i) Agency and legislative liaison by own employees.

(A) The prohibition on the use of appropriated funds, in subparagraph (b)(1) of this clause, does not apply in the case of a payment of reasonable compensation made to an officer or employee of a person requesting or receiving a covered Federal action if the payment is for agency and legislative liaison activities not directly related to a covered Federal action.

(B) For purposes of subdivision (b)(3)(i)(A) of this clause, providing any information specifically requested by an agency or Congress is permitted at any time.

(C) The following agency and legislative liaison activities are permitted at any time where they are not related to a specific solicitation for any covered Federal action:

(1) Discussing with an agency the qualities and characteristics (including individual demonstrations) of the person's products or services, conditions or terms of sale, and service capabilities.

(2) Technical discussions and other activities regarding the application or adaptation of the person's products or services for an agency's use.

(D) The following agency and legislative liaison activities are permitted where they are prior to formal solicitation of any covered Federal action--

(1) Providing any information not specifically requested but necessary for an agency to make an informed decision about initiation of a covered Federal action;

(2) Technical discussions regarding the preparation of an unsolicited proposal prior to its official submission; and

(3) Capability presentations by persons seeking awards from an agency pursuant to the provisions of the Small Business Act, as amended by Pub. L. 95-507, and subsequent amendments.

(E) Only those agency and legislative liaison activities expressly authorized by paragraph (b)(3)(i) of this clause are permitted under this clause.

(ii) Professional and technical services.

(A) The prohibition on the use of appropriated funds, in subparagraph (b)(1) of this clause, does not apply in the case of--

(1) A payment of reasonable compensation made to an officer or employee of a person requesting or receiving a covered Federal action or an extension, continuation, renewal, amendment, or modification of a covered Federal action, if payment is for professional or technical services rendered directly in the preparation, submission, or

negotiation of any bid, proposal, or application for that Federal action or for meeting requirements imposed by or pursuant to law as a condition for receiving that Federal action.

(2) Any reasonable payment to a person, other than an officer or employee of a person requesting or receiving a covered Federal action or an extension, continuation, renewal, amendment, or modification of a covered Federal action if the payment is for professional or technical services rendered directly in the preparation, submission, or negotiation of any bid, proposal, or application for that Federal action or for meeting requirements imposed by or pursuant to law as a condition for receiving that Federal action. Persons other than officers or employees of a person requesting or receiving a covered Federal action include consultants and trade associations.

(B) For purposes of subdivision (b)(3)(ii)(A) of this clause, "professional and technical services" shall be limited to advice and analysis directly applying any professional or technical discipline. For example, drafting of a legal document accompanying a bid or proposal by a lawyer is allowable. Similarly, technical advice provided by an engineer on the performance or operational capability of a piece of equipment rendered directly in the negotiation of a contract is allowable. However, communications with the intent to influence made by a professional (such as a licensed lawyer) or a technical person (such as a licensed accountant) are not allowable under this section unless they provide advice and analysis directly applying their professional or technical expertise and unless the advice or analysis is rendered directly and solely in the preparation, submission or negotiation of a covered Federal action. Thus, for example, communications with the intent to influence made by a lawyer that do not provide legal advice or analysis directly and solely related to the legal aspects of his or her client's proposal, but generally advocate one proposal over another are not allowable under this section because the lawyer is not providing professional legal services. Similarly, communications with the intent to influence made by an engineer providing an engineering analysis prior to the preparation or submission of a bid or proposal are not allowable under this section since the engineer is providing technical services but not directly in the preparation, submission or negotiation of a covered Federal action.

(C) Requirements imposed by or pursuant to law as a condition for receiving a covered Federal award include those required by law or regulation and any other requirements in the actual award documents.

(D) Only those professional and technical services expressly authorized by paragraph (b)(3)(ii) of this clause are permitted under this clause.

(4) The reporting requirements of FAR 3.803(a) shall not apply with respect to payments of reasonable compensation made to regularly employed officers or employees of a person.

(c) Disclosure.

(1) The Contractor who requests or receives from an agency a Federal contract shall file with that agency a disclosure form, OMB standard form LLL, Disclosure of Lobbying Activities, if such person has made or has agreed to make any payment using nonappropriated funds (to include profits from any covered Federal action), which would be prohibited under subparagraph (b)(1) of this clause, if paid for with appropriated funds.

(2) The Contractor shall file a disclosure form at the end of each calendar quarter in which there occurs any event that materially affects the accuracy of the information contained in any disclosure form previously filed by such person under subparagraph (c)(1) of this clause. An event that materially affects the accuracy of the information reported includes--

(i) A cumulative increase of $25,000 or more in the amount paid or expected to be paid for influencing or attempting to influence a covered Federal action; or

(ii) A change in the person(s) or individual(s) influencing or attempting to influence a covered Federal action; or

(iii) A change in the officer(s), employee(s), or Member(s) contacted to influence or attempt to influence a covered Federal action.

(3) The Contractor shall require the submittal of a certification, and if required, a disclosure form by any person who requests or receives any subcontract exceeding $100,000 under the Federal contract.

(4) All subcontractor disclosure forms (but not certifications) shall be forwarded from tier to tier until received by the prime Contractor. The prime Contractor shall submit all disclosures to the Contracting Officer at the end of the calendar quarter in which the disclosure form is submitted by the subcontractor. Each subcontractor certification shall be retained in the subcontract file of the awarding Contractor.

(d) Agreement. The Contractor agrees not to make any payment prohibited by this clause.

(e) Penalties.

(1) Any person who makes an expenditure prohibited under paragraph (a) of this clause or who fails to file or amend the disclosure form to be filed or amended by paragraph (b) of this clause shall be subject to civil penalties as provided for by 31 U.S.C. 1352. An imposition of a civil penalty does not prevent the Government from seeking any other remedy that may be applicable.

(2) Contractors may rely without liability on the representation made by their subcontractors in the certification and disclosure form.

(f) Cost allowability. Nothing in this clause makes allowable or reasonable any costs which would otherwise be unallowable or unreasonable. Conversely, costs made specifically unallowable by the requirements in this clause will not be made allowable under any other provision.

(End of clause)

CLAUSES INCORPORATED BY FULL TEXT

52.204-4 PRINTED OR COPIED DOUBLE-SIDED ON RECYCLED PAPER (AUG 2000)

(a) Definitions. As used in this clause--

“Postconsumer material” means a material or finished product that has served its intended use and has been discarded for disposal or recovery, having completed its life as a consumer item. Postconsumer material is a part of the broader category of “recovered material.” For paper and paper products, postconsumer material means “postconsumer fiber” defined by the U.S. Environmental Protection Agency (EPA) as--

(1) Paper, paperboard, and fibrous materials from retail stores, office buildings, homes, and so forth, after they have passed through their end-usage as a consumer item, including: used corrugated boxes; old newspapers; old magazines; mixed waste paper; tabulating cards; and used cordage; or

(2) All paper, paperboard, and fibrous materials that enter and are collected from municipal solid waste; but not

(3) Fiber derived from printers' over-runs, converters' scrap, and over-issue publications.

“Printed or copied double-sided” means printing or reproducing a document so that information is on both sides of a sheet of paper.

“Recovered material,” for paper and paper products, is defined by EPA in its Comprehensive Procurement Guideline as “recovered fiber” and means the following materials:

(1) Postconsumer fiber; and

(2) Manufacturing wastes such as--

(i) Dry paper and paperboard waste generated after completion of the papermaking process (that is, those manufacturing operations up to and including the cutting and trimming of the paper machine reel into smaller rolls or rough sheets) including: envelope cuttings, bindery trimmings, and other paper and paperboard waste resulting from printing, cutting, forming, and other converting operations; bag, box, and carton manufacturing wastes; and butt rolls, mill wrappers, and rejected unused stock; and

(ii) Repulped finished paper and paperboard from obsolete inventories of paper and paperboard manufacturers, merchants, wholesalers, dealers, printers, converters, or others.

(b) In accordance with Section 101 of Executive Order 13101 of September 14, 1998, Greening the Government through Waste Prevention, Recycling, and Federal Acquisition, the Contractor is encouraged to submit paper documents, such as offers, letters, or reports, that are printed or copied double-sided on recycled paper that meet minimum content standards specified in Section 505 of Executive Order 13101, when not using electronic commerce methods to submit information or data to the Government.

(c) If the Contractor cannot purchase high-speed copier paper, offset paper, forms bond, computer printout paper, carbonless paper, file folders, white wove envelopes, writing and office paper, book paper, cotton fiber paper, and cover stock meeting the 30 percent postconsumer material standard for use in submitting paper documents to the Government, it should use paper containing no less than 20 percent postconsumer material. This lesser standard should be used only when paper meeting the 30 percent postconsumer material standard is not obtainable at a reasonable price or does not meet reasonable performance standards.

(End of clause)

CLAUSES INCORPORATED BY FULL TEXT

52.209-6 PROTECTING THE GOVERNMENT'S INTEREST WHEN SUBCONTRACTING WITH CONTRACTORS DEBARRED, SUSPENDED, OR PROPOSED FOR DEBARMENT (SEP 2006)

(a) The Government suspends or debars Contractors to protect the Government's interests. The Contractor shall not enter into any subcontract in excess of the $30,000 with a Contractor that is debarred, suspended, or proposed for debarment unless there is a compelling reason to do so.

(b) The Contractor shall require each proposed first-tier subcontractor, whose subcontract will exceed $30,000, to disclose to the Contractor, in writing, whether as of the time of award of the subcontract, the subcontractor, or its principles, is or is not debarred, suspended, or proposed for debarment by the Federal Government.

(c) A corporate officer or a designee of the Contractor shall notify the Contracting Officer, in writing, before entering into a subcontract with a party that is debarred, suspended, or proposed for debarment (see FAR 9.404 for information on the in the Excluded Parties List System). The notice must include the following:

(1) The name of the subcontractor.

(2) The Contractor's knowledge of the reasons for the subcontractor being in the Excluded Parties List System.

(3) The compelling reason(s) for doing business with the subcontractor notwithstanding its inclusion in the Excluded Parties List System.

(4) The systems and procedures the Contractor has established to ensure that it is fully protecting the Government's interests when dealing with such subcontractor in view of the specific basis for the party's debarment, suspension, or proposed debarment.

(End of clause)

CLAUSES INCORPORATED BY FULL TEXT

52.215-2 AUDIT AND RECORDS--NEGOTIATION (JUN 1999)

(a) As used in this clause, "records" includes books, documents, accounting procedures and practices, and other data, regardless of type and regardless of whether such items are in written form, in the form of computer data, or in any other form.

(b) Examination of costs. If this is a cost-reimbursement, incentive, time-and-materials, labor-hour, or price redeterminable contract, or any combination of these, the Contractor shall maintain and the Contracting Officer, or an authorized representative of the Contracting Officer, shall have the right to examine and audit all records and other evidence sufficient to reflect properly all costs claimed to have been incurred or anticipated to be incurred directly or indirectly in performance of this contract. This right of examination shall include inspection at all reasonable times of the Contractor's plants, or parts of them, engaged in performing the contract.

(c) Cost or pricing data. If the Contractor has been required to submit cost or pricing data in connection with any pricing action relating to this contract, the Contracting Officer, or an authorized representative of the Contracting Officer, in order to evaluate the accuracy, completeness, and currency of the cost or pricing data, shall have the right to examine and audit all of the Contractor's records, including computations and projections, related to--

(1) The proposal for the contract, subcontract, or modification;

(2) The discussions conducted on the proposal(s), including those related to negotiating;

(3) Pricing of the contract, subcontract, or modification; or

(4) Performance of the contract, subcontract or modification.

(d) Comptroller General--(1) The Comptroller General of the United States, or an authorized representative, shall have access to and the right to examine any of the Contractor's directly pertinent records involving transactions related to this contract or a subcontract hereunder.

(2) This paragraph may not be construed to require the Contractor or subcontractor to create or maintain any record that the Contractor or subcontractor does not maintain in the ordinary course of business or pursuant to a provision of law.

(e) Reports. If the Contractor is required to furnish cost, funding, or performance reports, the Contracting Officer or an authorized representative of the Contracting Officer shall have the right to examine and audit the supporting records and materials, for the purpose of evaluating (1) the effectiveness of the Contractor's policies and procedures to produce data compatible with the objectives of these reports and (2) the data reported.

(f) Availability. The Contractor shall make available at its office at all reasonable times the records, materials, and

other evidence described in paragraphs (a), (b), (c), (d), and (e) of this clause, for examination, audit, or reproduction, until 3 years after final payment under this contract or for any shorter period specified in Subpart 4.7, Contractor Records Retention, of the Federal Acquisition Regulation (FAR), or for any longer period required by statute or by other clauses of this contract. In addition--

(1) If this contract is completely or partially terminated, the Contractor shall make available the records relating to the work terminated until 3 years after any resulting final termination settlement; and

(2) The Contractor shall make available records relating to appeals under the Disputes clause or to litigation or the settlement of claims arising under or relating to this contract until such appeals, litigation, or claims are finally resolved.

(g) The Contractor shall insert a clause containing all the terms of this clause, including this paragraph (g), in all subcontracts under this contract that exceed the simplified acquisition threshold, and--

(1) That are cost-reimbursement, incentive, time-and-materials, labor-hour, or price-redeterminable type or any combination of these;

(2) For which cost or pricing data are required; or

(3) That require the subcontractor to furnish reports as discussed in paragraph (e) of this clause.

The clause may be altered only as necessary to identify properly the contracting parties and the Contracting Officer under the Government prime contract.

(End of clause)

CLAUSES INCORPORATED BY FULL TEXT

52.215-11 PRICE REDUCTION FOR DEFECTIVE COST OR PRICING DATA--MODIFICATIONS (OCT 1997)

(a) This clause shall become operative only for any modification to this contract involving a pricing adjustment expected to exceed the threshold for submission of cost or pricing data at FAR 15.403-4, except that this clause does not apply to any modification if an exception under FAR 15.403-1 applies.

(b) If any price, including profit or fee, negotiated in connection with any modification under this clause, or any cost reimbursable under this contract, was increased by any significant amount because (1) the Contractor or a subcontractor furnished cost or pricing data that were not complete, accurate, and current as certified in its Certificate of Current Cost or Pricing Data, (2) a subcontractor or prospective subcontractor furnished the Contractor cost or pricing data that were not complete, accurate, and current as certified in the Contractor's Certificate of Current Cost or Pricing Data, or (3) any of these parties furnished data of any description that were not accurate, the price or cost shall be reduced accordingly and the contract shall be modified to reflect the reduction. This right to a price reduction is limited to that resulting from defects in data relating to modifications for which this clause becomes operative under paragraph (a) of this clause.

(c) Any reduction in the contract price under paragraph (b) of this clause due to defective data from a prospective subcontractor that was not subsequently awarded the subcontract shall be limited to the amount, plus applicable overhead and profit markup, by which--

(1) The actual subcontract; or

(2) The actual cost to the Contractor, if there was no subcontract, was less than the prospective subcontract cost estimate submitted by the Contractor; provided, that the actual subcontract price was not itself affected by defective cost or pricing data.

(d)(1) If the Contracting Officer determines under paragraph (b) of this clause that a price or cost reduction should be made, the Contractor agrees not to raise the following matters as a defense:

(i) The Contractor or subcontractor was a sole source supplier or otherwise was in a superior bargaining position and thus the price of the contract would not have been modified even if accurate, complete, and current cost or pricing data had been submitted.

(ii) The Contracting Officer should have known that the cost or pricing data in issue were defective even though the Contractor or subcontractor took no affirmative action to bring the character of the data to the attention of the Contracting Officer.

(iii) The contract was based on an agreement about the total cost of the contract and there was no agreement about the cost of each item procured under the contract.

(iv) The Contractor or subcontractor did not submit a Certificate of Current Cost or Pricing Data.

(2)(i) Except as prohibited by subdivision (d)(2)(ii) of this clause, an offset in an amount determined appropriate by the Contracting Officer based upon the facts shall be allowed against the amount of a contract price reduction if--

(A) The Contractor certifies to the Contracting Officer that, to the best of the Contractor's knowledge and belief, the Contractor is entitled to the offset in the amount requested; and

(B) The Contractor proves that the cost or pricing data were available before the “as of” date specified on its Certificate of Current Cost or Pricing Data, and that the data were not submitted before such date.

(ii) An offset shall not be allowed if--

(A) The understated data were known by the Contractor to be understated before the “as of” date specified on its Certificate of Current Cost or Pricing Data; or

(B) The Government proves that the facts demonstrate that the contract price would not have increased in the amount to be offset even if the available data had been submitted before the “as of” date specified on its Certificate of Current Cost or Pricing Data.

(e) If any reduction in the contract price under this clause reduces the price of items for which payment was made prior to the date of the modification reflecting the price reduction, the Contractor shall be liable to and shall pay the United States at the time such overpayment is repaid--

(1) Simple interest on the amount of such overpayment to be computed from the date(s) of overpayment to the Contractor to the date the Government is repaid by the Contractor at the applicable underpayment rate effective for each quarter prescribed by the Secretary of the Treasury under 26 U.S.C. 6621(a)(2); and

A penalty equal to the amount of the overpayment, if the Contractor or subcontractor knowingly submitted cost or pricing data that were incomplete, inaccurate, or noncurrent.

(End of clause)

CLAUSES INCORPORATED BY FULL TEXT

52.215-13 SUBCONTRACTOR COST OR PRICING DATA--MODIFICATIONS (OCT 1997)

(a) The requirements of paragraphs (b) and (c) of this clause shall--

(1) Become operative only for any modification to this contract involving a pricing adjustment expected to exceed the threshold for submission of cost or pricing data at FAR 15.403-4; and

(2) Be limited to such modifications.

(b) Before awarding any subcontract expected to exceed the threshold for submission of cost or pricing data at FAR 15.403-4, on the date of agreement on price or the date of award, whichever is later; or before pricing any subcontract modification involving a pricing adjustment expected to exceed the threshold for submission of cost or pricing data at FAR 15.403-4, the Contractor shall require the subcontractor to submit cost or pricing data (actually or by specific identification in writing), unless an exception under FAR 15.403-1 applies.

(c) The Contractor shall require the subcontractor to certify in substantially the form prescribed in FAR 15.406-2 that, to the best of its knowledge and belief, the data submitted under paragraph (b) of this clause were accurate, complete, and current as of the date of agreement on the negotiated price of the subcontract or subcontract modification.

The Contractor shall insert the substance of this clause, including this paragraph (d), in each subcontract that exceeds the threshold for submission of cost or pricing data at FAR 15.403-4 on the date of agreement on price or the date of award, whichever is later.

(End of clause)

CLAUSES INCORPORATED BY FULL TEXT

52.215-15 PENSION ADJUSTMENTS AND ASSET REVERSIONS (OCT 2004)

(a) The Contractor shall promptly notify the Contracting Officer in writing when it determines that it will terminate a defined-benefit pension plan or otherwise recapture such pension fund assets.

(b) For segment closings, pension plan terminations, or curtailment of benefits, the amount of the adjustment shall be--

(1) For contracts and subcontracts that are subject to full coverage under the Cost Accounting Standards (CAS) Board rules and regulations (48 CFR Chapter 99), the amount measured, assigned, and allocated in accordance with 48 CFR 9904.413-50(c)(12); and

(2) For contracts and subcontracts that are not subject to full coverage under the CAS, the amount measured, assigned, and allocated in accordance with 48 CFR 9904.413-50(c)(12), except the numerator of the fraction at 48 CFR 9904.413-50(c)(12)(vi) shall be the sum of the pension plan costs allocated to all non-CAS covered contracts and subcontracts that are subject to Federal Acquisition Regulation (FAR) Subpart 31.2 or for which cost or pricing data were submitted.

(c) For all other situations where assets revert to the Contractor, or such assets are constructively received by it for any reason, the Contractor shall, at the Government's option, make a refund or give a credit to the Government for its equitable share of the gross amount withdrawn. The Government's equitable share shall reflect the Government's

participation in pension costs through those contracts for which cost or pricing data were submitted or that are subject to FAR Subpart 31.2.

(d) The Contractor shall include the substance of this clause in all subcontracts under this contract that meet the applicability requirement of FAR 15.408(g).

(End of clause)

CLAUSES INCORPORATED BY FULL TEXT

52.215-18 REVERSION OR ADJUSTMENT OF PLANS FOR POSTRETIREMENT BENEFITS (PRB) OTHER THAN PENSIONS (JUL 2005)

(a) The Contractor shall promptly notify the Contracting Officer in writing when the Contractor determines that it will terminate or reduce the benefits of a PRB plan.

(b) If PRB fund assets revert or inure to the Contractor, or are constructively received by it under a plan termination or otherwise, the Contractor shall make a refund or give a credit to the Government for its equitable share as required by 31.205-6(o)(5) of the Federal Acquisition Regulation (FAR). When determining or agreeing on the method for recovery of the Government's equitable share, the contracting parties should consider the following methods: cost reduction, amortizing the credit over a number of years (with appropriate interest), cash refund, or some other agreed upon method. Should the parties be unable to agree on the method for recovery of the Government's equitable share, through good faith negotiations, the Contracting Officer shall designate the method of recovery.

(c) The Contractor shall insert the substance of this clause in all subcontracts that meet the applicability requirements of FAR 15.408(j).

(End of clause)

CLAUSES INCORPORATED BY FULL TEXT

52.215-19 NOTIFICATION OF OWNERSHIP CHANGES (OCT 1997)

(a) The Contractor shall make the following notifications in writing:

(1) When the Contractor becomes aware that a change in its ownership has occurred, or is certain to occur, that could result in changes in the valuation of its capitalized assets in the accounting records, the Contractor shall notify the Administrative Contracting Officer (ACO) within 30 days.

(2) The Contractor shall also notify the ACO within 30 days whenever changes to asset valuations or any other cost changes have occurred or are certain to occur as a result of a change in ownership.

(b) The Contractor shall--

(1) Maintain current, accurate, and complete inventory records of assets and their costs;

(2) Provide the ACO or designated representative ready access to the records upon request;

(3) Ensure that all individual and grouped assets, their capitalized values, accumulated depreciation or amortization, and remaining useful lives are identified accurately before and after each of the Contractor's ownership changes; and

(4) Retain and continue to maintain depreciation and amortization schedules based on the asset records maintained before each Contractor ownership change.

The Contractor shall include the substance of this clause in all subcontracts under this contract that meet the applicability requirement of FAR 15.408(k).

(End of clause)

CLAUSES INCORPORATED BY FULL TEXT

52.215-21 REQUIREMENTS FOR COST OR PRICING DATA OR INFORMATION OTHER THAN COST OR PRICING DATA--MODIFICATIONS (OCT 1997)

(a) Exceptions from cost or pricing data. (1) In lieu of submitting cost or pricing data for modifications under this contract, for price adjustments expected to exceed the threshold set forth at FAR 15.403-4 on the date of the agreement on price or the date of the award, whichever is later, the Contractor may submit a written request for exception by submitting the information described in the following subparagraphs. The Contracting Officer may require additional supporting information, but only to the extent necessary to determine whether an exception should be granted, and whether the price is fair and reasonable--

(i) Identification of the law or regulation establishing the price offered. If the price is controlled under law by periodic rulings, reviews, or similar actions of a governmental body, attach a copy of the controlling document, unless it was previously submitted to the contracting office.

(ii) Information on modifications of contracts or subcontracts for commercial items. (A) If--

(1) The original contract or subcontract was granted an exception from cost or pricing data requirements because the price agreed upon was based on adequate price competition or prices set by law or regulation, or was a contract or subcontract for the acquisition of a commercial item; and

(2) The modification (to the contract or subcontract) is not exempted based on one of these exceptions, then the Contractor may provide information to establish that the modification would not change the contract or subcontract from a contract or subcontract for the acquisition of a commercial item to a contract or subcontract for the acquisition of an item other than a commercial item.

(B) For a commercial item exception, the Contractor shall provide, at a minimum, information on prices at which the same item or similar items have previously been sold that is adequate for evaluating the reasonableness of the price of the modification. Such information may include--

(1) For catalog items, a copy of or identification of the catalog and its date, or the appropriate pages for the offered items, or a statement that the catalog is on file in the buying office to which the proposal is being submitted. Provide a copy or describe current discount policies and price lists (published or unpublished), e.g., wholesale, original equipment manufacturer, or reseller. Also explain the basis of each offered price and its relationship to the

established catalog price, including how the proposed price relates to the price of recent sales in quantities similar to the proposed quantities.

(2) For market-priced items, the source and date or period of the market quotation or other basis for market price, the base amount, and applicable discounts. In addition, describe the nature of the market.

(3) For items included on an active Federal Supply Service Multiple Award Schedule contract, proof that an exception has been granted for the schedule item.

(2) The Contractor grants the Contracting Officer or an authorized representative the right to examine, at any time before award, books, records, documents, or other directly pertinent records to verify any request for an exception under this clause, and the reasonableness of price. For items priced using catalog or market prices, or law or regulation , access does not extend to cost or profit information or other data relevant solely to the Contractor's determination of the prices to be offered in the catalog or marketplace.

(b) Requirements for cost or pricing data. If the Contractor is not granted an exception from the requirement to submit cost or pricing data, the following applies:

(1) The Contractor shall submit cost or pricing data and supporting attachments in accordance with Table 15-2 of FAR 15.408.

As soon as practicable after agreement on price, but before award (except for unpriced actions), the Contractor shall submit a Certificate of Current Cost or Pricing Data, as prescribed by FAR 15.406-2.

(End of clause)

CLAUSES INCORPORATED BY FULL TEXT

52.222-21 PROHIBITION OF SEGREGATED FACILITIES (FEB 1999)

(a) Segregated facilities, as used in this clause, means any waiting rooms, work areas, rest rooms and wash rooms, restaurants and other eating areas, time clocks, locker rooms and other storage or dressing areas, parking lots, drinking fountains, recreation or entertainment areas, transportation, and housing facilities provided for employees, that are segregated by explicit directive or are in fact segregated on the basis of race, color, religion, sex, or national origin because of written or oral policies or employee custom. The term does not include separate or single-user rest rooms or necessary dressing or sleeping areas provided to assure privacy between the sexes.

(b) The Contractor agrees that it does not and will not maintain or provide for its employees any segregated facilities at any of its establishments, and that it does not and will not permit its employees to perform their services at any location under its control where segregated facilities are maintained. The Contractor agrees that a breach of this clause is a violation of the Equal Opportunity clause in this contract.

(c) The Contractor shall include this clause in every subcontract and purchase order that is subject to the Equal Opportunity clause of this contract.

(End of clause)

CLAUSES INCORPORATED BY FULL TEXT

52.222-26 EQUAL OPPORTUNITY (APR 2002)

(a) Definition. United States, as used in this clause, means the 50 States, the District of Columbia, Puerto Rico, the Northern Mariana Islands, American Samoa, Guam, the U.S. Virgin Islands, and Wake Island.

(b) If, during any 12-month period (including the 12 months preceding the award of this contract), the Contractor has been or is awarded nonexempt Federal contracts and/or subcontracts that have an aggregate value in excess of $10,000, the Contractor shall comply with paragraphs (b)(1) through (b)(11) of this clause, except for work performed outside the United States by employees who were not recruited within the United States. Upon request, the Contractor shall provide information necessary to determine the applicability of this clause.

(1) The Contractor shall not discriminate against any employee or applicant for employment because of race, color, religion, sex, or national origin. However, it shall not be a violation of this clause for the Contractor to extend a publicly announced preference in employment to Indians living on or near an Indian reservation, in connection with employment opportunities on or near an Indian reservation, as permitted by 41 CFR 60-1.5.

(2) The Contractor shall take affirmative action to ensure that applicants are employed, and that employees are treated during employment, without regard to their race, color, religion, sex, or national origin. This shall include, but not be limited to, (i) employment, (ii) upgrading, (iii) demotion, (iv) transfer, (v) recruitment or recruitment advertising, (vi) layoff or termination, (vii) rates of pay or other forms of compensation, and (viii) selection for training, including apprenticeship.

(3) The Contractor shall post in conspicuous places available to employees and applicants for employment the notices to be provided by the Contracting Officer that explain this clause.

(4) The Contractor shall, in all solicitations or advertisements for employees placed by or on behalf of the Contractor, state that all qualified applicants will receive consideration for employment without regard to race, color, religion, sex, or national origin.

(5) The Contractor shall send, to each labor union or representative of workers with which it has a collective bargaining agreement or other contract or understanding, the notice to be provided by the Contracting Officer advising the labor union or workers' representative of the Contractor's commitments under this clause, and post copies of the notice in conspicuous places available to employees and applicants for employment.

(6) The Contractor shall comply with Executive Order 11246, as amended, and the rules, regulations, and orders of the Secretary of Labor.

(7) The Contractor shall furnish to the contracting agency all information required by Executive Order 11246, as amended, and by the rules, regulations, and orders of the Secretary of Labor. The Contractor shall also file Standard Form 100 (EEO-1), or any successor form, as prescribed in 41 CFR part 60-1. Unless the Contractor has filed within the 12 months preceding the date of contract award, the Contractor shall, within 30 days after contract award, apply to either the regional Office of Federal Contract Compliance Programs (OFCCP) or the local office of the Equal Employment Opportunity Commission for the necessary forms.

(8) The Contractor shall permit access to its premises, during normal business hours, by the contracting agency or the OFCCP for the purpose of conducting on-site compliance evaluations and complaint investigations. The Contractor shall permit the Government to inspect and copy any books, accounts, records (including computerized records), and other material that may be relevant to the matter under investigation and pertinent to compliance with Executive Order 11246, as amended, and rules and regulations that implement the Executive Order.

(9) If the OFCCP determines that the Contractor is not in compliance with this clause or any rule, regulation, or order of the Secretary of Labor, this contract may be canceled, terminated, or suspended in whole or in part and the Contractor may be declared ineligible for further Government contracts, under the procedures authorized in

Executive Order 11246, as amended. In addition, sanctions may be imposed and remedies invoked against the Contractor as provided in Executive Order 11246, as amended; in the rules, regulations, and orders of the Secretary of Labor; or as otherwise provided by law.

(10) The Contractor shall include the terms and conditions of subparagraphs (b)(1) through (11) of this clause in every subcontract or purchase order that is not exempted by the rules, regulations, or orders of the Secretary of Labor issued under Executive Order 11246, as amended, so that these terms and conditions will be binding upon each subcontractor or vendor.

(11) The Contractor shall take such action with respect to any subcontract or purchase order as the contracting officer may direct as a means of enforcing these terms and conditions, including sanctions for noncompliance; provided, that if the Contractor becomes involved in, or is threatened with, litigation with a subcontractor or vendor as a result of any direction, the Contractor may request the United States to enter into the litigation to protect the interests of the United States.

(c) Notwithstanding any other clause in this contract, disputes relative to this clause will be governed by the procedures in 41 CFR 60-1.1.

(End of clause)

CLAUSES INCORPORATED BY FULL TEXT

52.222-27 AFFIRMATIVE ACTION COMPLIANCE REQUIREMENTS FOR CONSTRUCTION (FEB 1999)

(a) Definitions. "Covered area," as used in this clause, means the geographical area described in the solicitation for this contract.

"Deputy Assistant Secretary," as used in this clause, means Deputy Assistant Secretary for Federal Contract Compliance, U.S. Department of Labor, or a designee.

"Employer's identification number," as used in this clause, means the Federal Social Security number used on the employer's quarterly federal tax return, U.S. Treasury Department Form 941.

"Minority," as used in this clause, means--

(1) American Indian or Alaskan Native (all persons having origins in any of the original peoples of North America and maintaining identifiable tribal affiliations through membership and participation or community identification).

(2) Asian and Pacific Islander (all persons having origins in any of the original peoples of the Far East, Southeast Asia, the Indian Subcontinent, or the Pacific Islands);

(3) Black (all persons having origins in any of the black African racial groups not of Hispanic origin); and

(4) Hispanic (all persons of Mexican, Puerto Rican, Cuban, Central or South American, or other Spanish culture or origin, regardless of race).

(b) If the Contractor, or a subcontractor at any tier, subcontracts a portion of the work involving any construction trade, each such subcontract in excess of $10,000 shall include this clause and the Notice containing the goals for minority and female participation stated in the solicitation for this contract.

(c) If the Contractor is participating in a Hometown Plan (41 CFR 60-4) approved by the U.S. Department of Labor

in a covered area, either individually or through an association, its affirmative action obligations on all work in the plan area (including goals) shall comply with the plan for those trades that have unions participating in the plan. Contractors must be able to demonstrate participation in, and compliance with, the provisions of the plan. Each Contractor or subcontractor participating in an approved plan is also required to comply with its obligations under the Equal Opportunity clause, and to make a good faith effort to achieve each goal under the plan in each trade in which it has employees. The overall good-faith performance by other Contractors or subcontractors toward a goal in an approved plan does not excuse any Contractor's or subcontractor's failure to make good-faith efforts to achieve the plan's goals.

(d) The Contractor shall implement the affirmative action procedures in subparagraphs (g)(1) through (16) of this clause. The goals stated in the solicitation for this contract are expressed as percentages of the total hours of employment and training of minority and female utilization that the Contractor should reasonably be able to achieve in each construction trade in which it has employees in the covered area. If the Contractor performs construction work in a geographical area located outside of the covered area, it shall apply the goals established for the geographical area where that work is actually performed. The Contractor is expected to make substantially uniform progress toward its goals in each craft.

(e) Neither the terms and conditions of any collective bargaining agreement, nor the failure by a union with which the Contractor has a collective bargaining agreement, to refer minorities or women shall excuse the Contractor's obligations under this clause, Executive Order 11246, as amended, or the regulations thereunder.

(f) In order for the nonworking training hours of apprentices and trainees to be counted in meeting the goals, apprentices and trainees must be employed by the Contractor during the training period, and the Contractor must have made a commitment to employ the apprentices and trainees at the completion of their training, subject to the availability of employment opportunities. Trainees must be trained pursuant to training programs approved by the U.S. Department of Labor.

(g) The Contractor shall take affirmative action to ensure equal employment opportunity. The evaluation of the Contractor's compliance with this clause shall be based upon its effort to achieve maximum results from its actions. The Contractor shall document these efforts fully and implement affirmative action steps at least as extensive as the following:

(1) Ensure a working environment free of harassment, intimidation, and coercion at all sites and in all facilities where the Contractor's employees are assigned to work. The Contractor, if possible, will assign two or more women to each construction project. The Contractor shall ensure that foremen, superintendents, and other onsite supervisory personnel are aware of and carry out the Contractor's obligation to maintain such a working environment, with specific attention to minority or female individuals working at these sites or facilities.

(2) Establish and maintain a current list of sources for minority and female recruitment. Provide written notification to minority and female recruitment sources and community organizations when the Contractor or its unions have employment opportunities available, and maintain a record of the organizations' responses.

(3) Establish and maintain a current file of the names, addresses, and telephone numbers of each minority and female off-the-street applicant, referrals of minorities or females from unions, recruitment sources, or community organizations, and the action taken with respect to each individual. If an individual was sent to the union hiring hall for referral and not referred back to the Contractor by the union or, if referred back, not employed by the Contractor, this shall be documented in the file, along with whatever additional actions the Contractor may have taken.

(4) Immediately notify the Deputy Assistant Secretary when the union or unions with which the Contractor has a collective bargaining agreement has not referred back to the Contractor a minority or woman sent by the Contractor, or when the Contractor has other information that the union referral process has impeded the Contractor's efforts to meet its obligations.

(5) Develop on-the-job training opportunities and/or participate in training programs for the area that expressly include minorities and women, including upgrading programs and apprenticeship and trainee programs relevant to the Contractor's employment needs, especially those programs funded or approved by the Department of Labor. The Contractor shall provide notice of these programs to the sources compiled under subparagraph (g)(2) of this clause.

(6) Disseminate the Contractor's equal employment policy by--

(i) Providing notice of the policy to unions and to training, recruitment, and outreach programs, and requesting their cooperation in assisting the Contractor in meeting its contract obligations;

(ii) Including the policy in any policy manual and in collective bargaining agreements;

(iii) Publicizing the policy in the company newspaper, annual report, etc.;

(iv) Reviewing the policy with all management personnel and with all minority and female employees at least once a year; and

(v) Posting the policy on bulletin boards accessible to employees at each location where construction work is performed.

(7) Review, at least annually, the Contractor's equal employment policy and affirmative action obligations with all employees having responsibility for hiring, assignment, layoff, termination, or other employment decisions. Conduct review of this policy with all on-site supervisory personnel before initiating construction work at a job site. A written record shall be made and maintained identifying the time and place of these meetings, persons attending, subject matter discussed, and disposition of the subject matter.

(8) Disseminate the Contractor's equal employment policy externally by including it in any advertising in the news media, specifically including minority and female news media. Provide written notification to, and discuss this policy with, other Contractors and subcontractors with which the Contractor does or anticipates doing business.

(9) Direct recruitment efforts, both oral and written, to minority, female, and community organizations, to schools with minority and female students, and to minority and female recruitment and training organizations serving the Contractor's recruitment area and employment needs. Not later than 1 month before the date for acceptance of applications for apprenticeship or training by any recruitment source, send written notification to organizations such as the above, describing the openings, screening procedures, and tests to be used in the selection process.

(10) Encourage present minority and female employees to recruit minority persons and women. Where reasonable, provide after-school, summer, and vacation employment to minority and female youth both on the site and in other areas of the Contractor's workforce.

(11) Validate all tests and other selection requirements where required under 41 CFR 60-3.

(12) Conduct, at least annually, an inventory and evaluation at least of all minority and female personnel for promotional opportunities. Encourage these employees to seek or to prepare for, through appropriate training, etc., opportunities for promotion.

(13) Ensure that seniority practices, job classifications, work assignments, and other personnel practices do not have a discriminatory effect by continually monitoring all personnel and employment-related activities to ensure that the Contractor's obligations under this contract are being carried out.

(14) Ensure that all facilities and company activities are nonsegregated except that separate or single-user rest rooms and necessary dressing or sleeping areas shall be provided to assure privacy between the sexes.

(15) Maintain a record of solicitations for subcontracts for minority and female construction contractors and

suppliers, including circulation of solicitations to minority and female contractor associations and other business associations.

(16) Conduct a review, at least annually, of all supervisors' adherence to and performance under the Contractor's equal employment policy and affirmative action obligations.

(h) The Contractor is encouraged to participate in voluntary associations that may assist in fulfilling one or more of the affirmative action obligations contained in subparagraphs (g)(1) through (16) of this clause. The efforts of a contractor association, joint contractor-union, contractor-community, or similar group of which the contractor is a member and participant may be asserted as fulfilling one or more of its obligations under subparagraphs (g)(1) through (16) of this clause, provided the Contractor--

(1) Actively participates in the group;

(2) Makes every effort to ensure that the group has a positive impact on the employment of minorities and women in the industry;

(3) Ensures that concrete benefits of the program are reflected in the Contractor's minority and female workforce participation;

(4) Makes a good-faith effort to meet its individual goals and timetables; and

(5) Can provide access to documentation that demonstrates the effectiveness of actions taken on behalf of the Contractor. The obligation to comply is the Contractor's, and failure of such a group to fulfill an obligation shall not be a defense for the Contractor's noncompliance.

(i) A single goal for minorities and a separate single goal for women shall be established. The Contractor is required to provide equal employment opportunity and to take affirmative action for all minority groups, both male and female, and all women, both minority and nonminority. Consequently, the Contractor may be in violation of Executive Order 11246, as amended, if a particular group is employed in a substantially disparate manner.

(j) The Contractor shall not use goals or affirmative action standards to discriminate against any person because of race, color, religion, sex, or national origin.

(k) The Contractor shall not enter into any subcontract with any person or firm debarred from Government contracts under Executive Order 11246, as amended.

(l) The Contractor shall carry out such sanctions and penalties for violation of this clause and of the Equal Opportunity clause, including suspension, termination, and cancellation of existing subcontracts, as may be imposed or ordered under Executive Order 11246, as amended, and its implementing regulations, by the OFCCP. Any failure to carry out these sanctions and penalties as ordered shall be a violation of this clause and Executive Order 11246, as amended.

(m) The Contractor in fulfilling its obligations under this clause shall implement affirmative action procedures at least as extensive as those prescribed in paragraph (g) of this clause, so as to achieve maximum results from its efforts to ensure equal employment opportunity. If the Contractor fails to comply with the requirements of Executive Order 11246, as amended, the implementing regulations, or this clause, the Deputy Assistant Secretary shall take action as prescribed in 41 CFR 60-4.8.

(n) The Contractor shall designate a responsible official to--

(1) Monitor all employment-related activity to ensure that the Contractor's equal employment policy is being carried out;

(2) Submit reports as may be required by the Government; and

(3) Keep records that shall at least include for each employee the name, address, telephone number, construction trade, union affiliation (if any), employee identification number, social security number, race, sex, status (e.g., mechanic, apprentice, trainee, helper, or laborer), dates of changes in status, hours worked per week in the indicated trade, rate of pay, and locations at which the work was performed. Records shall be maintained in an easily understandable and retrievable form; however, to the degree that existing records satisfy this requirement, separate records are not required to be maintained.

Nothing contained herein shall be construed as a limitation upon the application of other laws that establish different standards of compliance or upon the requirements for the hiring of local or other area residents (e.g., those under the Public Works Employment Act of 1977 and the Community Development Block Grant Program).

(End of clause)

CLAUSES INCORPORATED BY FULL TEXT

52.222-29 NOTIFICATION OF VISA DENIAL (JIUN 2003)

It is a violation of Executive Order 11246 for a Contractor to refuse to employ any applicant or not to assign any person hired in the United States, Puerto Rico, the Northern Mariana Islands, American Samoa, Guam, the U.S. Virgin Islands, or Wake Island, on the basis that the individual's race, color, religion, sex, or national origin is not compatible with the policies of the country where or for whom the work will be performed (41 CFR 60-1.10). The Contractor shall notify the U.S. Department of State, Assistant Secretary, Bureau of Political-Military Affairs (PM), 2201 C Street NW., Room 6212, Washington, DC 20520, and the U.S. Department of Labor, Deputy Assistant Secretary for Federal Contract Compliance, when it has knowledge of any employee or potential employee being denied an entry visa to a country where this contract will be performed, and it believes the denial is attributable to the race, color, religion, sex, or national origin of the employee or potential employee.

(End of clause)

CLAUSES INCORPORATED BY FULL TEXT

52.222-35 EQUAL OPPORTUNITY FOR SPECIAL DISABLED VETERANS, VETERANS OF THE VIETNAM ERA, AND OTHER ELIGIBLE VETERANS (SEP 2006)

(a) Definitions. As used in this clause--

All employment openings means all positions except executive and top management, those positions that will be filled from within the Contractor's organization, and positions lasting 3 days or less. This term includes full-time employment, temporary employment of more than 3 days duration, and part-time employment.

Executive and top management means any employee--

(1) Whose primary duty consists of the management of the enterprise in which the individual is employed or of a customarily recognized department or subdivision thereof;

(2) Who customarily and regularly directs the work of two or more other employees;

(3) Who has the authority to hire or fire other employees or whose suggestions and recommendations as to the hiring or firing and as to the advancement and promotion or any other change of status of other employees will be given particular weight;

(4) Who customarily and regularly exercises discretionary powers; and

(5) Who does not devote more than 20 percent or, in the case of an employee of a retail or service establishment, who does not devote more than 40 percent of total hours of work in the work week to activities that are not directly and closely related to the performance of the work described in paragraphs (1) through (4) of this definition. This paragraph (5) does not apply in the case of an employee who is in sole charge of an establishment or a physically separated branch establishment, or who owns at least a 20 percent interest in the enterprise in which the individual is employed.

Other eligible veteran means any other veteran who served on active duty during a war or in a campaign or expedition for which a campaign badge has been authorized.

Positions that will be filled from within the Contractor's organization means employment openings for which the Contractor will give no consideration to persons outside the Contractor's organization (including any affiliates, subsidiaries, and parent companies) and includes any openings the Contractor proposes to fill from regularly established “recall” lists. The exception does not apply to a particular opening once an employer decides to consider applicants outside of its organization.

Qualified special disabled veteran means a special disabled veteran who satisfies the requisite skill, experience, education, and other job-related requirements of the employment position such veteran holds or desires, and who, with or without reasonable accommodation, can perform the essential functions of such position.

Special disabled veteran means--

(1) A veteran who is entitled to compensation (or who but for the receipt of military retired pay would be entitled to compensation) under laws administered by the Department of Veterans Affairs for a disability--

(i) Rated at 30 percent or more; or

(ii) Rated at 10 or 20 percent in the case of a veteran who has been determined under 38 U.S.C. 3106 to have a serious employment handicap (i.e., a significant impairment of the veteran's ability to prepare for, obtain, or retain employment consistent with the veteran's abilities, aptitudes, and interests); or

(2) A person who was discharged or released from active duty because of a service-connected disability.

Veteran of the Vietnam era means a person who--

(1) Served on active duty for a period of more than 180 days and was discharged or released from active duty with other than a dishonorable discharge, if any part of such active duty occurred--

(i) In the Republic of Vietnam between February 28, 1961, and May 7, 1975; or

(ii) Between August 5, 1964, and May 7, 1975, in all other cases; or

(2) Was discharged or released from active duty for a service-connected disability if any part of the active duty was performed--

(i) In the Republic of Vietnam between February 28, 1961, and May 7, 1975; or

(ii) Between August 5, 1964, and May 7, 1975, in all other cases.

(b) General. (1) The Contractor shall not discriminate against the individual because the individual is a special disabled veteran, a veteran of the Vietnam era, or other eligible veteran, regarding any position for which the employee or applicant for employment is qualified. The Contractor shall take affirmative action to employ, advance in employment, and otherwise treat qualified special disabled veterans, veterans of the Vietnam era, and other eligible veterans without discrimination based upon their disability or veterans' status in all employment practices such as--

(i) Recruitment, advertising, and job application procedures;

(ii) Hiring, upgrading, promotion, award of tenure, demotion, transfer, layoff, termination, right of return from layoff and rehiring;

(iii) Rate of pay or any other form of compensation and changes in compensation;

(iv) Job assignments, job classifications, organizational structures, position descriptions, lines of progression, and seniority lists;

(v) Leaves of absence, sick leave, or any other leave;

(vi) Fringe benefits available by virtue of employment, whether or not administered by the Contractor;

(vii) Selection and financial support for training, including apprenticeship, and on-the-job training under 38 U.S.C. 3687, professional meetings, conferences, and other related activities, and selection for leaves of absence to pursue training;

(viii) Activities sponsored by the Contractor including social or recreational programs; and

(ix) Any other term, condition, or privilege of employment.

(2) The Contractor shall comply with the rules, regulations, and relevant orders of the Secretary of Labor issued under the Vietnam Era Veterans' Readjustment Assistance Act of 1972 (the Act), as amended (38 U.S.C. 4211 and 4212).

(c) Listing openings. (1) The Contractor shall immediately list all employment openings that exist at the time of the execution of this contract and those which occur during the performance of this contract, including those not generated by this contract, and including those occurring at an establishment of the Contractor other than the one where the contract is being performed, but excluding those of independently operated corporate affiliates, at an appropriate local public employment service office of the State wherein the opening occurs. Listing employment openings with the U.S. Department of Labor's America's Job Bank shall satisfy the requirement to list jobs with the local employment service office.

(2) The Contractor shall make the listing of employment openings with the local employment service office at least concurrently with using any other recruitment source or effort and shall involve the normal obligations of placing a bona fide job order, including accepting referrals of veterans and nonveterans. This listing of employment openings does not require hiring any particular job applicant or hiring from any particular group of job applicants and is not intended to relieve the Contractor from any requirements of Executive orders or regulations concerning nondiscrimination in employment.

(3) Whenever the Contractor becomes contractually bound to the listing terms of this clause, it shall advise the State public employment agency in each State where it has establishments of the name and location of each hiring location in the State. As long as the Contractor is contractually bound to these terms and has so advised the State agency, it need not advise the State agency of subsequent contracts. The Contractor may advise the State agency when it is no longer bound by this contract clause.

(d) Applicability. This clause does not apply to the listing of employment openings that occur and are filled outside the 50 States, the District of Columbia, the Commonwealth of Puerto Rico, the Commonwealth of the Northern Mariana Islands, American Samoa, Guam, the Virgin Islands of the United States, and Wake Island.

(e) Postings. (1) The Contractor shall post employment notices in conspicuous places that are available to employees and applicants for employment.

(2) The employment notices shall--

(i) State the rights of applicants and employees as well as the Contractor's obligation under the law to take affirmative action to employ and advance in employment qualified employees and applicants who are special disabled veterans, veterans of the Vietnam era, and other eligible veterans; and

(ii) Be in a form prescribed by the Deputy Assistant Secretary for Federal Contract Compliance Programs, Department of Labor (Deputy Assistant Secretary of Labor), and provided by or through the Contracting Officer.

(3) The Contractor shall ensure that applicants or employees who are special disabled veterans are informed of the contents of the notice (e.g., the Contractor may have the notice read to a visually disabled veteran, or may lower the posted notice so that it can be read by a person in a wheelchair).

(4) The Contractor shall notify each labor union or representative of workers with which it has a collective bargaining agreement, or other contract understanding, that the Contractor is bound by the terms of the Act and is committed to take affirmative action to employ, and advance in employment, qualified special disabled veterans, veterans of the Vietnam era, and other eligible veterans.

(f) Noncompliance. If the Contractor does not comply with the requirements of this clause, the Government may take appropriate actions under the rules, regulations, and relevant orders of the Secretary of Labor issued pursuant to the Act.

(g) Subcontracts. The Contractor shall insert the terms of this clause in all subcontracts or purchase orders of $100,000 or more unless exempted by rules, regulations, or orders of the Secretary of Labor. The Contractor shall act as specified by the Deputy Assistant Secretary of Labor to enforce the terms, including action for noncompliance.

(End of clause)

CLAUSES INCORPORATED BY FULL TEXT

52.222-36 AFFIRMATIVE ACTION FOR WORKERS WITH DISABILITIES (JUN 1998)

(a) General. (1) Regarding any position for which the employee or applicant for employment is qualified, the Contractor shall not discriminate against any employee or applicant because of physical or mental disability. The Contractor agrees to take affirmative action to employ, advance in employment, and otherwise treat qualified individuals with disabilities without discrimination based upon their physical or mental disability in all employment practices such as--

(i) Recruitment, advertising, and job application procedures;

(ii) Hiring, upgrading, promotion, award of tenure, demotion, transfer, layoff, termination, right of return from layoff, and rehiring;

(iii) Rates of pay or any other form of compensation and changes in compensation;

(iv) Job assignments, job classifications, organizational structures, position descriptions, lines of progression, and seniority lists;

(v) Leaves of absence, sick leave, or any other leave;

(vi) Fringe benefits available by virtue of employment, whether or not administered by the Contractor;

(vii) Selection and financial support for training, including apprenticeships, professional meetings, conferences, and other related activities, and selection for leaves of absence to pursue training;

(viii) Activities sponsored by the Contractor, including social or recreational programs; and

(ix) Any other term, condition, or privilege of employment.

(2) The Contractor agrees to comply with the rules, regulations, and relevant orders of the Secretary of Labor (Secretary) issued under the Rehabilitation Act of 1973 (29 U.S.C. 793) (the Act), as amended.

(b) Postings. (1) The Contractor agrees to post employment notices stating--

(i) The Contractor's obligation under the law to take affirmative action to employ and advance in employment qualified individuals with disabilities; and

(ii) The rights of applicants and employees.

(2) These notices shall be posted in conspicuous places that are available to employees and applicants for employment. The Contractor shall ensure that applicants and employees with disabilities are informed of the contents of the notice (e.g., the Contractor may have the notice read to a visually disabled individual, or may lower the posted notice so that it might be read by a person in a wheelchair). The notices shall be in a form prescribed by the Deputy Assistant Secretary for Federal Contract Compliance of the U.S. Department of Labor (Deputy Assistant Secretary) and shall be provided by or through the Contracting Officer.

(3) The Contractor shall notify each labor union or representative of workers with which it has a collective bargaining agreement or other contract understanding, that the Contractor is bound by the terms of Section 503 of the Act and is committed to take affirmative action to employ, and advance in employment, qualified individuals with physical or mental disabilities.

(c) Noncompliance. If the Contractor does not comply with the requirements of this clause, appropriate actions may be taken under the rules, regulations, and relevant orders of the Secretary issued pursuant to the Act.

(d) Subcontracts. The Contractor shall include the terms of this clause in every subcontract or purchase order in excess of $10,000 unless exempted by rules, regulations, or orders of the Secretary. The Contractor shall act as specified by the Deputy Assistant Secretary to enforce the terms, including action for noncompliance.

(End of clause)

CLAUSES INCORPORATED BY FULL TEXT

52.222-37 EMPLOYMENT REPORTS ON SPECIAL DISABLED VETERANS, VETERANS OF THE VIETNAM ERA, AND OTHER ELIGIBLE VETERANS (SEP 2006)

(a) Unless the Contractor is a State or local government agency, the Contractor shall report at least annually, as required by the Secretary of Labor, on--

(1) The number of disabled veterans and the number of veterans of the Vietnam era in the workforce of the contractor by job category and hiring location; and

(2) The total number of new employees hired during the period covered by the report, and of that total, the number of disabled veterans, and the number of veterans of the Vietnam era.

(b) The above items shall be reported by completing the form entitled "Federal Contractor Veterans' Employment Report VETS-100."

(c) Reports shall be submitted no later than September 30 of each year beginning September 30, 1988.

(d) The employment activity report required by paragraph (a)(2) of this clause shall reflect total hires during the most recent 12-month period as of the ending date selected for the employment profile report required by paragraph (a)(1) of this clause. Contractors may select an ending date: (1) As of the end of any pay period during the period January through March 1st of the year the report is due, or (2) as of December 31, if the contractor has previous written approval from the Equal Employment Opportunity Commission to do so for purposes of submitting the Employer Information Report EEO-1 (Standard Form 100).

(e) The count of veterans reported according to paragraph (a) of this clause shall be based on voluntary disclosure. Each Contractor subject to the reporting requirements at 38 U.S.C. 4212 shall invite all disabled veterans and veterans of the Vietnam era who wish to benefit under the affirmative action program at 38 U.S.C. 4212 to identify themselves to the Contractor. The invitation shall state that the information is voluntarily provided; that the information will be kept confidential; that disclosure or refusal to provide the information will not subject the applicant or employee to any adverse treatment; and that the information will be used only in accordance with the regulations promulgated under 38 U.S.C. 4212.

(f) Subcontracts. The Contractor shall include the terms of this clause in every subcontract or purchase order of $100,000 or more unless exempted by rules, regulations, or orders of the Secretary.

(End of clause)

CLAUSES INCORPORATED BY FULL TEXT

52.225-13 RESTRICTIONS ON CERTAIN FOREIGN PURCHASES (FEB 2006)

(a) Except as authorized by the Office of Foreign Assets Control (OFAC) in the Department of the Treasury, the Contractor shall not acquire, for use in the performance of this contract, any supplies or services if any proclamation, Executive order, or statute administered by OFAC, or if OFAC's implementing regulations at 31 CFR chapter V, would prohibit such a transaction by a person subject to the jurisdiction of the United States.

(b) Except as authorized by OFAC, most transactions involving Cuba, Iran, and Sudan are prohibited, as are most imports from North Korea, into the United States or its outlying areas. Lists of entities and individuals subject to economic sanctions are included in OFAC's List of Specially Designated Nationals and Blocked Persons at TerList1.html. More information about these restrictions, as well as updates, is available in the OFAC's regulations at 31 CFR chapter V and/or on OFAC's Web site at http://www.treas.gov/offices/enforcement/ofac/.

(c) The Contractor shall insert this clause, including this paragraph (c), in all subcontracts.

(End of clause)

CLAUSES INCORPORATED BY FULL TEXT

52.225-14 INCONSISTENCY BETWEEN ENGLISH VERSION AND TRANSLATION OF CONTRACT (FEB 2000)

In the event of inconsistency between any terms of this contract and any translation into another language, the English language meaning shall control.

(End of clause)

CLAUSES INCORPORATED BY FULL TEXT

52.227-4 PATENT INDEMNITY--CONSTRUCTION CONTRACTS (APR 1984)

Except as otherwise provided, the Contractor agrees to indemnify the Government and its officers, agents, and employees against liability, including costs and expenses, for infringement upon any United States patent (except a patent issued upon an application that is now or may hereafter be withheld from issue pursuant to a Secrecy Order under 35 U.S.C. 181) arising out of performing this contract or out of the use or disposal by or for the account of the Government of supplies furnished or work performed under this contract.

(End of clause)

CLAUSES INCORPORATED BY FULL TEXT

52.228-3 WORKERS' COMPENSATION INSURANCE (DEFENSE BASE ACT) (APR 1984)

The Contractor shall (a) provide, before commencing performance under this contract, such workers' compensation insurance or security as the Defense Base Act (42 U.S.C. 1651, et seq.) requires and (b) continue to maintain it until performance is completed. The Contractor shall insert, in all subcontracts under this contract to which the Defense Base Act applies, a clause similar to this clause (including this sentence) imposing upon those subcontractors this requirement to comply with the Defense Base Act.

(End of clause)

CLAUSES INCORPORATED BY FULL TEXT

52.229-6 TAXES--FOREIGN FIXED-PRICE CONTRACTS (JUN 2003)

(a) To the extent that this contract provides for furnishing supplies or performing services outside the United States and its outlying areas, this clause applies in lieu of any Federal, State, and local taxes clause of the contract.

(b) Definitions. As used in this clause--

"Contract date," means the date set for bid opening or, if this is a negotiated contract or a modification, the effective date of this contract or modification.

Country concerned means any country, other than the United States and its outlying areas, in which expenditures under this contract are made.

"Tax" and "taxes," include fees and charges for doing business that are levied by the government of the country concerned or by its political subdivisions.

"All applicable taxes and duties," means all taxes and duties, in effect on the contract date, that the taxing authority is imposing and collecting on the transactions or property covered by this contract, pursuant to written ruling or regulation in effect on the contract date.

"After-imposed tax," means any new or increased tax or duty, or tax that was exempted or excluded on the contract date but whose exemption was later revoked or reduced during the contract period, other than excepted tax, on the transactions or property covered by this contract that the Contractor is required to pay or bear as the result of legislative, judicial, or administrative action taking effect after the contract date.

"After-relieved tax," means any amount of tax or duty, other than an excepted tax, that would otherwise have been payable on the transactions or property covered by this contract, but which the Contractor is not required to pay or bear, or for which the Contractor obtains a refund, as the result of legislative, judicial, or administrative action taking effect after the contract date.

"Excepted tax," means social security or other employment taxes, net income and franchise taxes, excess profits taxes, capital stock taxes, transportation taxes, unemployment compensation taxes, and property taxes. "Excepted tax" does not include gross income taxes levied on or measured by sales or receipts from sales, property taxes assessed on completed supplies covered by this contract, or any tax assessed on the Contractor's possession of, interest in, or use of property, title to which is in the U.S. Government.

(c) Unless otherwise provided in this contract, the contract price includes all applicable taxes and duties, except taxes and duties that the Government of the United States and the government of the country concerned have agreed shall not be applicable to expenditures in such country by or on behalf of the United States.

(d) The contract price shall be increased by the amount of any after-imposed tax or of any tax or duty specifically excluded from the contract price by a provision of this contract that the Contractor is required to pay or bear, including any interest or penalty, if the Contractor states in writing that the contract price does not include any contingency for such tax and if liability for such tax, interest, or penalty was not incurred through the Contractor's fault, negligence, or failure to follow instructions of the Contracting Officer or to comply with the provisions of paragraph (i) below.

(e) The contract price shall be decreased by the amount of any after-relieved tax, including any interest or penalty. The Government of the United States shall be entitled to interest received by the Contractor incident to a refund of taxes to the extent that such interest was earned after the Contractor was paid by the Government of the United States for such taxes. The Government of the United States shall be entitled to repayment of any penalty refunded to the Contractor to the extent that the penalty was paid by the Government.

(f) The contract price shall be decreased by the amount of any tax or duty, other than an excepted tax, that was included in the contract and that the Contractor is required to pay or bear, or does not obtain a refund of, through the Contractor's fault, negligence, or failure to follow instructions of the Contracting Officer or to comply with the provisions of paragraph (i) below.

(g) No adjustment shall be made in the contract price under this clause unless the amount of the adjustment exceeds $250.

(h) If the Contractor obtains a reduction in tax liability under the United States Internal Revenue Code (Title 26, U.S. Code) because of the payment of any tax or duty that either was included in the contract price or was the basis of an increase in the contract price, the amount of the reduction shall be paid or credited to the Government of the

United States as the Contracting Officer directs.

(i) The Contractor shall take all reasonable action to obtain exemption from or refund of any taxes or duties, including interest or penalty, from which the United States Government, the Contractor, any subcontractor, or the transactions or property covered by this contract are exempt under the laws of the country concerned or its political subdivisions or which the governments of the United States and of the country concerned have agreed shall not be applicable to expenditures in such country by or on behalf of the United States.

(j) The Contractor shall promptly notify the Contracting Officer of all matters relating to taxes or duties that reasonably may be expected to result in either an increase or decrease in the contract price and shall take appropriate action as the Contracting Officer directs. The contract price shall be equitably adjusted to cover the costs of action taken by the Contractor at the direction of the Contracting Officer, including any interest, penalty, and reasonable attorneys' fees.

(End of clause)

CLAUSES INCORPORATED BY FULL TEXT

52.232-5 PAYMENTS UNDER FIXED-PRICE CONSTRUCTION CONTRACTS (SEP 2002)

(a) Payment of price. The Government shall pay the Contractor the contract price as provided in this contract.

(b) Progress payments. The Government shall make progress payments monthly as the work proceeds, or at more frequent intervals as determined by the Contracting Officer, on estimates of work accomplished which meets the standards of quality established under the contract, as approved by the Contracting Officer.

(1) The Contractor's request for progress payments shall include the following substantiation:

(i) An itemization of the amounts requested, related to the various elements of work required by the contract covered by the payment requested.

(ii) A listing of the amount included for work performed by each subcontractor under the contract.

(iii) A listing of the total amount of each subcontract under the contract.

(iv) A listing of the amounts previously paid to each such subcontractor under the contract.

(v) Additional supporting data in a form and detail required by the Contracting Officer.

(2) In the preparation of estimates, the Contracting Officer may authorize material delivered on the site and preparatory work done to be taken into consideration. Material delivered to the Contractor at locations other than the site also may be taken into consideration if--

(i) Consideration is specifically authorized by this contract; and

(ii) The Contractor furnishes satisfactory evidence that it has acquired title to such material and that the material will be used to perform this contract.

(c) Contractor certification. Along with each request for progress payments, the Contractor shall furnish the following certification, or payment shall not be made: (However, if the Contractor elects to delete paragraph (c)(4) from the certification, the certification is still acceptable.)

I hereby certify, to the best of my knowledge and belief, that--

(1) The amounts requested are only for performance in accordance with the specifications, terms, and conditions of the contract;

(2) All payments due to subcontractors and suppliers from previous payments received under the contract have been made, and timely payments will be made from the proceeds of the payment covered by this certification, in accordance with subcontract agreements and the requirements of chapter 39 of Title 31, United States Code;

(3) This request for progress payments does not include any amounts which the prime contractor intends to withhold or retain from a subcontractor or supplier in accordance with the terms and conditions of the subcontract; and

(4) This certification is not to be construed as final acceptance of a subcontractor's performance.

_____

(Name)

_____

(Title)

_____

(Date)

(d) Refund of unearned amounts. If the Contractor, after making a certified request for progress payments, discovers that a portion or all of such request constitutes a payment for performance by the Contractor that fails to conform to the specifications, terms, and conditions of this contract (hereinafter referred to as the "unearned amount"), the Contractor shall--

(1) Notify the Contracting Officer of such performance deficiency; and

(2) Be obligated to pay the Government an amount (computed by the Contracting Officer in the manner provided in paragraph (j) of this clause) equal to interest on the unearned amount from the 8th day after the date of receipt of the unearned amount until--

(i) The date the Contractor notifies the Contracting Officer that the performance deficiency has been corrected; or

(ii) The date the Contractor reduces the amount of any subsequent certified request for progress payments by an amount equal to the unearned amount.

(e) Retainage. If the Contracting Officer finds that satisfactory progress was achieved during any period for which a progress payment is to be made, the Contracting Officer shall authorize payment to be made in full. However, if satisfactory progress has not been made, the Contracting Officer may retain a maximum of 10 percent of the amount of the payment until satisfactory progress is achieved. When the work is substantially complete, the Contracting Officer may retain from previously withheld funds and future progress payments that amount the Contracting Officer considers adequate for protection of the Government and shall release to the Contractor all the remaining withheld funds. Also, on completion and acceptance of each separate building, public work, or other division of the contract, for which the price is stated separately in the contract, payment shall be made for the completed work without retention of a percentage.

(f) Title, liability, and reservation of rights. All material and work covered by progress payments made shall, at the

time of payment, become the sole property of the Government, but this shall not be construed as--

(1) Relieving the Contractor from the sole responsibility for all material and work upon which payments have been made or the restoration of any damaged work; or

(2) Waiving the right of the Government to require the fulfillment of all of the terms of the contract.

(g) Reimbursement for bond premiums. In making these progress payments, the Government shall, upon request, reimburse the Contractor for the amount of premiums paid for performance and payment bonds (including coinsurance and reinsurance agreements, when applicable) after the Contractor has furnished evidence of full payment to the surety. The retainage provisions in paragraph (e) of this clause shall not apply to that portion of progress payments attributable to bond premiums.

(h) Final payment. The Government shall pay the amount due the Contractor under this contract after--

(1) Completion and acceptance of all work;

(2) Presentation of a properly executed voucher; and

(3) Presentation of release of all claims against
the Government arising by virtue of this contract, other than claims, in stated amounts, that the Contractor has specifically excepted from the operation of the release. A release may also be required of the assignee if the Contractor's claim to amounts payable under this contract has been assigned under the Assignment of Claims Act of 1940 (31 U.S.C. 3727 and 41 U.S.C. 15).

(i) Limitation because of undefinitized work. Notwithstanding any provision of this contract, progress payments shall not exceed 80 percent on work accomplished on undefinitized contract actions. A "contract action" is any action resulting in a contract, as defined in FAR Subpart 2.1, including contract modifications for additional supplies or services, but not including contract modifications that are within the scope and under the terms of the contract, such as contract modifications issued pursuant to the Changes clause, or funding and other administrative changes.

(j) Interest computation on unearned amounts. In accordance with 31 U.S.C. 3903(c)(1), the amount payable under subparagraph (d)(2) of this clause shall be--

(1) Computed at the rate of average bond equivalent rates of 91-day Treasury bills auctioned at the most recent auction of such bills prior to the date the Contractor receives the unearned amount; and

(2) Deducted from the next available payment to the Contractor.

(End of clause)

CLAUSES INCORPORATED BY FULL TEXT

52.232-17 INTEREST (JUNE 1996)

(a) Except as otherwise provided in this contract under a Price Reduction for Defective Cost or Pricing Data clause or a Cost Accounting Standards clause, all amounts that become payable by the Contractor to the Government under this contract (net of any applicable tax credit under the Internal Revenue Code (26 U.S.C. 1481)) shall bear simple interest from the date due until paid unless paid within 30 days of becoming due. The interest rate shall be the interest rate established by the Secretary of the Treasury as provided in Section 12 of the Contract Disputes Act of

1978 (Public Law 95-563), which is applicable to the period in which the amount becomes due, as provided in paragraph (b) of this clause, and then at the rate applicable for each six-month period as fixed by the Secretary until the amount is paid. reproduce, prepare derivative works, distribute copies to the public, and (b) Amounts shall be due at the earliest of the following dates:

(1) The date fixed under this contract.

(2) The date of the first written demand for payment consistent with this contract, including any demand resulting from a default termination.

(3) The date the Government transmits to the Contractor a proposed supplemental agreement to confirm completed negotiations establishing the amount of debt.

(4) If this contract provides for revision of prices, the date of written notice to the Contractor stating the amount of refund payable in connection with a pricing proposal or a negotiated pricing agreement not confirmed by contract modification.

(c) The interest charge made under this clause may be reduced under the procedures prescribed in 32.614-2 of the Federal Acquisition Regulation in effect on the date of this contract.

(End of clause)

CLAUSES INCORPORATED BY FULL TEXT

52.232-18 AVAILABILITY OF FUNDS (APR 1984)

Funds are not presently available for this contract. The Government's obligation under this contract is contingent upon the availability of appropriated funds from which payment for contract purposes can be made. No legal liability on the part of the Government for any payment may arise until funds are made available to the Contracting Officer for this contract and until the Contractor receives notice of such availability, to be confirmed in writing by the Contracting Officer.

(End of clause)

CLAUSES INCORPORATED BY FULL TEXT

52.232-27 PROMPT PAYMENT FOR CONSTRUCTION CONTRACTS (SEP 2005)

Notwithstanding any other payment terms in this contract, the Government will make invoice payments under the terms and conditions specified in this clause. The Government considers payment as being made on the day a check is dated or the date of an electronic funds transfer. Definitions of pertinent terms are set forth in sections 2.101, 32.001, and 32.902 of the Federal Acquisition Regulation. All days referred to in this clause are calendar days, unless otherwise specified. (However, see paragraph (a)(3) concerning payments due on Saturdays, Sundays, and legal holidays.)

(a) Invoice payments--(1) Types of invoice payments. For purposes of this clause, there are several types of invoice payments that may occur under this contract, as follows:

(i) Progress payments, if provided for elsewhere in this contract, based on Contracting Officer approval of the estimated amount and value of work or services performed, including payments for reaching milestones in any project.

(A) The due date for making such payments is 14 days after the designated billing office receives a proper payment request. If the designated billing office fails to annotate the payment request with the actual date of receipt at the time of receipt, the payment due date is the 14th day after the date of the Contractor's payment request, provided the designated billing office receives a proper payment request and there is no disagreement over quantity, quality, or Contractor compliance with contract requirements.

(B) The due date for payment of any amounts retained by the Contracting Officer in accordance with the clause at 52.232-5, Payments Under Fixed-Price Construction Contracts, is as specified in the contract or, if not specified, 30 days after approval by the Contracting Officer for release to the Contractor.

(ii) Final payments based on completion and acceptance of all work and presentation of release of all claims against the Government arising by virtue of the contract, and payments for partial deliveries that have been accepted by the Government (e.g., each separate building, public work, or other division of the contract for which the price is stated separately in the contract).

(A) The due date for making such payments is the later of the following two events:

(1) The 30th day after the designated billing office receives a proper invoice from the Contractor.

(2) The 30th day after Government acceptance of the work or services completed by the Contractor. For a final invoice when the payment amount is subject to contract settlement actions (e.g., release of claims), acceptance is deemed to occur on the effective date of the contract settlement.

(B) If the designated billing office fails to annotate the invoice with the date of actual receipt at the time of receipt, the invoice payment due date is the 30th day after the date of the Contractor's invoice, provided the designated billing office receives a proper invoice and there is no disagreement over quantity, quality, or Contractor compliance with contract requirements.

(2) Contractor's invoice. The Contractor shall prepare and submit invoices to the designated billing office specified in the contract. A proper invoice must include the items listed in paragraphs (a)(2)(i) through (a)(2)(xi) of this clause. If the invoice does not comply with these requirements, the designated billing office must return it within 7 days after receipt, with the reasons why it is not a proper invoice. When computing any interest penalty owed the Contractor, the Government will take into account if the Government notifies the Contractor of an improper invoice in an untimely manner.

(i) Name and address of the Contractor.

(ii) Invoice date and invoice number. (The Contractor should date invoices as close as possible to the date of mailing or transmission.)

(iii) Contract number or other authorization for work or services performed (including order number and contract line item number).

(iv) Description of work or services performed.

(v) Delivery and payment terms (e.g., discount for prompt payment terms).

(vi) Name and address of Contractor official to whom payment is to be sent (must be the same as that in the contract or in a proper notice of assignment).

(vii) Name (where practicable), title, phone number, and mailing address of person to notify in the event of a defective invoice.

(viii) For payments described in paragraph (a)(1)(i) of this clause, substantiation of the amounts requested and certification in accordance with the requirements of the clause at 52.232-5, Payments Under Fixed-Price Construction Contracts.

(ix) Taxpayer Identification Number (TIN). The Contractor shall include its TIN on the invoice only if required elsewhere in this contract.

(x) Electronic funds transfer (EFT) banking information.

(A) The Contractor shall include EFT banking information on the invoice only if required elsewhere in this contract.

(B) If EFT banking information is not required to be on the invoice, in order for the invoice to be a proper invoice, the Contractor shall have submitted correct EFT banking information in accordance with the applicable solicitation provision (e.g., 52.232-38, Submission of Electronic Funds Transfer Information with Offer), contract clause (e.g., 52.232-33, Payment by Electronic Funds Transfer--Central Contractor Registration, or 52.232-34, Payment by Electronic Funds Transfer--Other Than Central Contractor Registration), or applicable agency procedures.

(C) EFT banking information is not required if the Government waived the requirement to pay by EFT.

(xi) Any other information or documentation required by the contract.

(3) Interest penalty. The designated payment office will pay an interest penalty automatically, without request from the Contractor, if payment is not made by the due date and the conditions listed in paragraphs (a)(3)(i) through (a)(3)(iii) of this clause are met, if applicable. However, when the due date falls on a Saturday, Sunday, or legal holiday, the designated payment office may make payment on the following working day without incurring a late payment interest penalty.

(i) The designated billing office received a proper invoice.

(ii) The Government processed a receiving report or other Government documentation authorizing payment and there was no disagreement over quantity, quality, Contractor compliance with any contract term or condition, or requested progress payment amount.

(iii) In the case of a final invoice for any balance of funds due the Contractor for work or services performed, the amount was not subject to further contract settlement actions between the Government and the Contractor.

(4) Computing penalty amount. The Government will compute the interest penalty in accordance with the Office of Management and Budget prompt payment regulations at 5 CFR part 1315.

(i) For the sole purpose of computing an interest penalty that might be due the Contractor for payments described in paragraph (a)(1)(ii) of this clause, Government acceptance or approval is deemed to occur constructively on the 7th day after the Contractor has completed the work or services in accordance with the terms and conditions of the contract. If actual acceptance or approval occurs within the constructive acceptance or approval period, the Government will base the determination of an interest penalty on the actual date of acceptance or approval. Constructive acceptance or constructive approval requirements do not apply if there is a disagreement over quantity, quality, or Contractor compliance with a contract provision. These requirements also do not compel Government officials to accept work or services, approve Contractor estimates, perform contract administration functions, or make payment prior to fulfilling their responsibilities.

(ii) The prompt payment regulations at 5 CFR 1315.10(c) do not require the Government to pay interest penalties if payment delays are due to disagreement between the Government and the Contractor over the payment amount or

other issues involving contract compliance, or on amounts temporarily withheld or retained in accordance with the terms of the contract. The Government and the Contractor shall resolve claims involving disputes, and any interest that may be payable in accordance with the clause at FAR 52.233-1, Disputes.

(5) Discounts for prompt payment. The designated payment office will pay an interest penalty automatically, without request from the Contractor, if the Government takes a discount for prompt payment improperly. The Government will calculate the interest penalty in accordance with the prompt payment regulations at 5 CFR part 1315.

(6) Additional interest penalty. (i) The designated payment office will pay a penalty amount, calculated in accordance with the prompt payment regulations at 5 CFR part 1315 in addition to the interest penalty amount only if--

(A) The Government owes an interest penalty of $1 or more;

(B) The designated payment office does not pay the interest penalty within 10 days after the date the invoice amount is paid; and

(C) The Contractor makes a written demand to the designated payment office for additional penalty payment, in accordance with paragraph (a)(6)(ii) of this clause, postmarked not later than 40 days after the date the invoice amount is paid.

(ii)(A) The Contractor shall support written demands for additional penalty payments with the following data. The Government will not request any additional data. The Contractor shall--

(1) Specifically assert that late payment interest is due under a specific invoice, and request payment of all overdue late payment interest penalty and such additional penalty as may be required;

(2) Attach a copy of the invoice on which the unpaid late payment interest was due; and

(3) State that payment of the principal has been received, including the date of receipt.

(B) If there is no postmark or the postmark is illegible--

(1) The designated payment office that receives the demand will annotate it with the date of receipt provided the demand is received on or before the 40th day after payment was made; or

(2) If the designated payment office fails to make the required annotation, the Government will determine the demand's validity based on the date the Contractor has placed on the demand, provided such date is no later than the 40th day after payment was made.

(b) Contract financing payments. If this contract provides for contract financing, the Government will make contract financing payments in accordance with the applicable contract financing clause.

(c) Subcontract clause requirements. The Contractor shall include in each subcontract for property or services (including a material supplier) for the purpose of performing this contract the following:

(1) Prompt payment for subcontractors. A payment clause that obligates the Contractor to pay the subcontractor for satisfactory performance under its subcontract not later than 7 days from receipt of payment out of such amounts as are paid to the Contractor under this contract.

(2) Interest for subcontractors. An interest penalty clause that obligates the Contractor to pay to the subcontractor an interest penalty for each payment not made in accordance with the payment clause--

(i) For the period beginning on the day after the required payment date and ending on the date on which payment of the amount due is made; and

(ii) Computed at the rate of interest established by the Secretary of the Treasury, and published in the Federal Register, for interest payments under section 12 of the Contract Disputes Act of 1978 (41 U.S.C. 611) in effect at the time the Contractor accrues the obligation to pay an interest penalty.

(3) Subcontractor clause flowdown. A clause requiring each subcontractor to use:

(i) Include a payment clause and an interest penalty clause conforming to the standards set forth in paragraphs (c)(1) and (c)(2) of this clause in each of its subcontracts; and

(ii) Require each of its subcontractors to include such clauses in their subcontracts with each lower-tier subcontractor or supplier.

(d) Subcontract clause interpretation. The clauses required by paragraph (c) of this clause shall not be construed to impair the right of the Contractor or a subcontractor at any tier to negotiate, and to include in their subcontract, provisions that--

(1) Retainage permitted. Permit the Contractor or a subcontractor to retain (without cause) a specified percentage of each progress payment otherwise due to a subcontractor for satisfactory performance under the subcontract without incurring any obligation to pay a late payment interest penalty, in accordance with terms and conditions agreed to by the parties to the subcontract, giving such recognition as the parties deem appropriate to the ability of a subcontractor to furnish a performance bond and a payment bond;

(2) Withholding permitted. Permit the Contractor or subcontractor to make a determination that part or all of the subcontractor's request for payment may be withheld in accordance with the subcontract agreement; and

(3) Withholding requirements. Permit such withholding without incurring any obligation to pay a late payment penalty if--

(i) A notice conforming to the standards of paragraph (g) of this clause previously has been furnished to the subcontractor; and

(ii) The Contractor furnishes to the Contracting Officer a copy of any notice issued by a Contractor pursuant to paragraph (d)(3)(i) of this clause.

(e) Subcontractor withholding procedures. If a Contractor, after making a request for payment to the Government but before making a payment to a subcontractor for the subcontractor's performance covered by the payment request, discovers that all or a portion of the payment otherwise due such subcontractor is subject to withholding from the subcontractor in accordance with the subcontract agreement, then the Contractor shall--

(1) Subcontractor notice. Furnish to the subcontractor a notice conforming to the standards of paragraph (g) of this clause as soon as practicable upon ascertaining the cause giving rise to a withholding, but prior to the due date for subcontractor payment;

(2) Contracting Officer notice. Furnish to the Contracting Officer, as soon as practicable, a copy of the notice furnished to the subcontractor pursuant to paragraph (e)(1) of this clause;

(3) Subcontractor progress payment reduction. Reduce the subcontractor's progress payment by an amount not to exceed the amount specified in the notice of withholding furnished under paragraph (e)(1) of this clause;

(4) Subsequent subcontractor payment. Pay the subcontractor as soon as practicable after the correction of the identified subcontract performance deficiency, and--

(i) Make such payment within--

(A) Seven days after correction of the identified subcontract performance deficiency (unless the funds therefor must be recovered from the Government because of a reduction under paragraph
(e)(5)(i)) of this clause; or

(B) Seven days after the Contractor recovers such funds from the Government; or

(ii) Incur an obligation to pay a late payment interest penalty computed at the rate of interest established by the Secretary of the Treasury, and published in the Federal Register, for interest payments under section 12 of the Contracts Disputes Act of 1978 (41 U.S.C. 611) in effect at the time the Contractor accrues the obligation to pay an interest penalty;

(5) Notice to Contracting Officer. Notify the Contracting Officer upon--

(i) Reduction of the amount of any subsequent certified application for payment; or

(ii) Payment to the subcontractor of any withheld amounts of a progress payment, specifying--

(A) The amounts withheld under paragraph (e)(1) of this clause; and

(B) The dates that such withholding began and ended; and

(6) Interest to Government. Be obligated to pay to the Government an amount equal to interest on the withheld payments (computed in the manner provided in 31 U.S.C. 3903(c)(1)), from the 8th day after receipt of the withheld amounts from the Government until--

(i) The day the identified subcontractor performance deficiency is corrected; or

(ii) The date that any subsequent payment is reduced under paragraph (e)(5)(i) of this clause.

(f) Third-party deficiency reports—

(1) Withholding from subcontractor. If a Contractor, after making payment to a first-tier subcontractor, receives from a supplier or subcontractor of the first-tier subcontractor (hereafter referred to as a “second-tier subcontractor”) a written notice in accordance with the Miller Act (40 U.S.C. 3133), asserting a deficiency in such first-tier subcontractor's performance under the contract for which the Contractor may be ultimately liable, and the Contractor determines that all or a portion of future payments otherwise due such first-tier subcontractor is subject to withholding in accordance with the subcontract agreement, the Contractor may, without incurring an obligation to pay an interest penalty under paragraph (e)(6) of this clause--

(i) Furnish to the first-tier subcontractor a notice conforming to the standards of paragraph (g) of this clause as soon as practicable upon making such determination; and

(ii) Withhold from the first-tier subcontractor's next available progress payment or payments an amount not to exceed the amount specified in the notice of withholding furnished under paragraph (f)(1)(i) of this clause.

(2) Subsequent payment or interest charge. As soon as practicable, but not later than 7 days after receipt of satisfactory written notification that the identified subcontract performance deficiency has been corrected, the Contractor shall--

(i) Pay the amount withheld under paragraph (f)(1)(ii) of this clause to such first-tier subcontractor; or

(ii) Incur an obligation to pay a late payment interest penalty to such first-tier subcontractor computed at the rate of interest established by the Secretary of the Treasury, and published in the Federal Register, for interest payments under section 12 of the Contracts DisputesAct of 1978 (41 U.S.C. 611) in effect at the time the Contractor accrues the obligation to pay an interest penalty.

(g) Written notice of subcontractor withholding. The Contractor shall issue a written notice of any withholding to a subcontractor (with a copy furnished to the Contracting Officer), specifying--

(1) The amount to be withheld;

(2) The specific causes for the withholding under the terms of the subcontract; and

(3) The remedial actions to be taken by the subcontractor in order to receive payment of the amounts withheld.

(h) Subcontractor payment entitlement. The Contractor may not request payment from the Government of any amount withheld or retained in accordance with paragraph (d) of this clause until such time as the Contractor has determined and certified to the Contracting Officer that the subcontractor is entitled to the payment of such amount.

(i) Prime-subcontractor disputes. A dispute between the Contractor and subcontractor relating to the amount or entitlement of a subcontractor to a payment or a late payment interest penalty under a clause included in the subcontract pursuant to paragraph (c) of this clause does not constitute a dispute to which the Government is a party. The Government may not be interpleaded in any judicial or administrative proceeding involving such a dispute.

(j) Preservation of prime-subcontractor rights. Except as provided in paragraph (i) of this clause, this clause shall not limit or impair any contractual, administrative, or judicial remedies otherwise available to the Contractor or a subcontractor in the event of a dispute involving late payment or nonpayment by the Contractor or deficient subcontract performance or nonperformance by a subcontractor.

(k) Non-recourse for prime contractor interest penalty. The Contractor's obligation to pay an interest penalty to a subcontractor pursuant to the clauses included in a subcontract under paragraph (c) of this clause shall not be construed to be an obligation of the Government for such interest penalty. A cost-reimbursement claim may not include any amount for reimbursement of such interest penalty.

(l) Overpayments. If the Contractor becomes aware of a duplicate contract financing or invoice payment or that the Government has otherwise overpaid on a contract financing or invoice payment, the Contractor shall immediately notify the Contracting Officer and request instructions for disposition of the overpayment.

(End of clause)

CLAUSES INCORPORATED BY FULL TEXT

52.232-33 PAYMENT BY ELECTRONIC FUNDS TRANSFER—CENTRAL CONTRACTOR REGISTRATION (OCT 2003)

(a) Method of payment. (1) All payments by the Government under this contract shall be made by electronic funds transfer (EFT), except as provided in paragraph (a)(2) of this clause. As used in this clause, the term “EFT” refers to the funds transfer and may also include the payment information transfer.

(2) In the event the Government is unable to release one or more payments by EFT, the Contractor agrees to either--

(i) Accept payment by check or some other mutually agreeable method of payment; or

(ii) Request the Government to extend the payment due date until such time as the Government can make payment by EFT (but see paragraph (d) of this clause).

(b) Contractor's EFT information. The Government shall make payment to the Contractor using the EFT information contained in the Central Contractor Registration (CCR) database. In the event that the EFT information changes, the Contractor shall be responsible for providing the updated information to the CCR database.

(c) Mechanisms for EFT payment. The Government may make payment by EFT through either the Automated Clearing House (ACH) network, subject to the rules of the National Automated Clearing House Association, or the Fedwire Transfer System. The rules governing Federal payments through the ACH are contained in 31 CFR part 210.

(d) Suspension of payment. If the Contractor's EFT information in the CCR database is incorrect, then the Government need not make payment to the Contractor under this contract until correct EFT information is entered into the CCR database; and any invoice or contract financing request shall be deemed not to be a proper invoice for the purpose of prompt payment under this contract. The prompt payment terms of the contract regarding notice of an improper invoice and delays in accrual of interest penalties apply.

(e) Liability for uncompleted or erroneous transfers. (1) If an uncompleted or erroneous transfer occurs because the Government used the Contractor's EFT information incorrectly, the Government remains responsible for--

(i) Making a correct payment;

(ii) Paying any prompt payment penalty due; and

(iii) Recovering any erroneously directed funds.

(2) If an uncompleted or erroneous transfer occurs because the Contractor's EFT information was incorrect, or was revised within 30 days of Government release of the EFT payment transaction instruction to the Federal Reserve System, and--

(i) If the funds are no longer under the control of the payment office, the Government is deemed to have made payment and the Contractor is responsible for recovery of any erroneously directed funds; or

(ii) If the funds remain under the control of the payment office, the Government shall not make payment, and the provisions of paragraph (d) of this clause shall apply.

(f) EFT and prompt payment. A payment shall be deemed to have been made in a timely manner in accordance with the prompt payment terms of this contract if, in the EFT payment transaction instruction released to the Federal Reserve System, the date specified for settlement of the payment is on or before the prompt payment due date, provided the specified payment date is a valid date under the rules of the Federal Reserve System.

(g) EFT and assignment of claims. If the Contractor assigns the proceeds of this contract as provided for in the assignment of claims terms of this contract, the Contractor shall require as a condition of any such assignment, that the assignee shall register separately in the CCR database and shall be paid by EFT in accordance with the terms of this clause. Notwithstanding any other requirement of this contract, payment to an ultimate recipient other than the Contractor, or a financial institution properly recognized under an assignment of claims pursuant to subpart 32.8, is not permitted. In all respects, the requirements of this clause shall apply to the assignee as if it were the Contractor. EFT information that shows the ultimate recipient of the transfer to be other than the Contractor, in the absence of a

proper assignment of claims acceptable to the Government, is incorrect EFT information within the meaning of paragraph (d) of this clause.

(h) Liability for change of EFT information by financial agent. The Government is not liable for errors resulting from changes to EFT information made by the Contractor's financial agent.

(i) Payment information. The payment or disbursing office shall forward to the Contractor available payment information that is suitable for transmission as of the date of release of the EFT instruction to the Federal Reserve System. The Government may request the Contractor to designate a desired format and method(s) for delivery of payment information from a list of formats and methods the payment office is capable of executing. However, the Government does not guarantee that any particular format or method of delivery is available at any particular payment office and retains the latitude to use the format and delivery method most convenient to the Government. If the Government makes payment by check in accordance with paragraph (a) of this clause, the Government shall mail the payment information to the remittance address contained in the CCR database.

(End of Clause)

CLAUSES INCORPORATED BY FULL TEXT

52.232-34 PAYMENT BY ELECTRONIC FUNDS TRANSFER—OTHER THAN CENTRAL CONTRACTOR REGISTRATION (MAY 1999)

(a) Method of payment. (1) All payments by the Government under this contract shall be made by electronic funds transfer (EFT) except as provided in paragraph (a)(2) of this clause. As used in this clause, the term “EFT” refers to the funds transfer and may also include the payment information transfer.

(2) In the event the Government is unable to release one or more payments by EFT, the Contractor agrees to either--

(i) Accept payment by check or some other mutually agreeable method of payment; or

(ii) Request the Government to extend payment due dates until such time as the Government makes payment by EFT (but see paragraph (d) of this clause).

(b) Mandatory submission of Contractor's EFT information. (1) The Contractor is required to provide the Government with the information required to make payment by EFT (see paragraph (j) of this clause). The Contractor shall provide this information directly to the office designated in this contract to receive that information (hereafter: “designated office”') no later than 15 days prior to submission of the first request for payment. If not otherwise specified in this contract, the payment office is the designated office for receipt of the Contractor's EFT information. If more than one designated office is named for the contract, the Contractor shall provide a separate notice to each office. In the event that the EFT information changes, the Contractor shall be responsible for providing the updated information to the designated office(s).

(2) If the Contractor provides EFT information applicable to multiple contracts, the Contractor shall specifically state the applicability of this EFT information in terms acceptable to the designated office. However, EFT information supplied to a designated office shall be applicable only to contracts that identify that designated office as the office to receive EFT information for that contract.

(c) Mechanisms for EFT payment. The Government may make payment by EFT through either the Automated Clearing House (ACH) network, subject to the rules of the National Automated Clearing House Association, or the Fedwire Transfer System. The rules governing Federal payments through the ACH are contained in 31 CFR part 210.

(d) Suspension of payment. (1) The Government is not required to make any payment under this contract until after receipt, by the designated office, of the correct EFT payment information from the Contractor. Until receipt of the correct EFT information, any invoice or contract financing request shall be deemed not to be a proper invoice for the purpose of prompt payment under this contract. The prompt payment terms of the contract regarding notice of an improper invoice and delays in accrual of interest penalties apply.

(2) If the EFT information changes after submission of correct EFT information, the Government shall begin using the changed EFT information no later than 30 days after its receipt by the designated office to the extent payment is made by EFT. However, the Contractor may request that no further payments be made until the updated EFT information is implemented by the payment office. If such suspension would result in a late payment under the prompt payment terms of this contract, the Contractor's request for suspension shall extend the due date for payment by the number of days of the suspension.

(e) Liability for uncompleted or erroneous transfers. (1) If an uncompleted or erroneous transfer occurs because the Government used the Contractor's EFT information incorrectly, the Government remains responsible for--

(i) Making a correct payment;

(ii) Paying any prompt payment penalty due; and

(iii) Recovering any erroneously directed funds.

(2) If an uncompleted or erroneous transfer occurs because the Contractor's EFT information was incorrect, or was revised within 30 days of Government release of the EFT payment transaction instruction to the Federal Reserve System, and--

(i) If the funds are no longer under the control of the payment office, the Government is deemed to have made payment and the Contractor is responsible for recovery of any erroneously directed funds; or

(ii) If the funds remain under the control of the payment office, the Government shall not make payment and the provisions of paragraph (d) shall apply.

(f) EFT and prompt payment. A payment shall be deemed to have been made in a timely manner in accordance with the prompt payment terms of this contract if, in the EFT payment transaction instruction released to the Federal Reserve System, the date specified for settlement of the payment is on or before the prompt payment due date, provided the specified payment date is a valid date under the rules of the Federal Reserve System.

(g) EFT and assignment of claims. If the Contractor assigns the proceeds of this contract as provided for in the assignment of claims terms of this contract, the Contractor shall require as a condition of any such assignment, that the assignee shall provide the EFT information required by paragraph (j) of this clause to the designated office, and shall be paid by EFT in accordance with the terms of this clause. In all respects, the requirements of this clause shall apply to the assignee as if it were the Contractor. EFT information that shows the ultimate recipient of the transfer to be other than the Contractor, in the absence of a proper assignment of claims acceptable to the Government, is incorrect EFT information within the meaning of paragraph (d) of this clause.

(h) Liability for change of EFT information by financial agent. The Government is not liable for errors resulting from changes to EFT information provided by the Contractor's financial agent.

(i) Payment information. The payment or disbursing office shall forward to the Contractor available payment information that is suitable for transmission as of the date of release of the EFT instruction to the Federal Reserve System. The Government may request the Contractor to designate a desired format and method(s) for delivery of payment information from a list of formats and methods the payment office is capable of executing. However, the Government does not guarantee that any particular format or method of delivery is available at any particular

payment office and retains the latitude to use the format and delivery method most convenient to the Government. If the Government makes payment by check in accordance with paragraph (a) of this clause, the Government shall mail the payment information to the remittance address in the contract.

(j) EFT information. The Contractor shall provide the following information to the designated office. The Contractor may supply this data for this or multiple contracts (see paragraph (b) of this clause). The Contractor shall designate a single financial agent per contract capable of receiving and processing the EFT information using the EFT methods described in paragraph (c) of this clause.

(1) The contract number (or other procurement identification number).

(2) The Contractor's name and remittance address, as stated in the contract(s).

(3) The signature (manual or electronic, as appropriate), title, and telephone number of the Contractor official authorized to provide this information.

(4) The name, address, and 9-digit Routing Transit Number of the Contractor's financial agent.

(5) The Contractor's account number and the type of account (checking, saving, or lockbox).

(6) If applicable, the Fedwire Transfer System telegraphic abbreviation of the Contractor's financial agent.

(7) If applicable, the Contractor shall also provide the name, address, telegraphic abbreviation, and 9-digit Routing Transit Number of the correspondent financial institution receiving the wire transfer payment if the Contractor's financial agent is not directly on-line to the Fedwire Transfer System; and, therefore, not the receiver of the wire transfer payment.

(End of clause)

CLAUSES INCORPORATED BY FULL TEXT

52.232-38 SUBMISSION OF ELECTRONIC FUNDS TRANSFER INFORMATION WITH OFFER (MAY 1999)

The offeror shall provide, with its offer, the following information that is required to make payment by electronic funds transfer (EFT) under any contract that results from this solicitation. This submission satisfies the requirement to provide EFT information under paragraphs (b)(1) and (j) of the clause at 52.232-34, Payment by Electronic Funds Transfer--Other than Central Contractor Registration.

(1) The solicitation number (or other procurement identification number).

(2) The offeror's name and remittance address, as stated in the offer.

(3) The signature (manual or electronic, as appropriate), title, and telephone number of the offeror's official authorized to provide this information.

(4) The name, address, and 9-digit Routing Transit Number of the offeror's financial agent.

(5) The offeror's account number and the type of account (checking, savings, or lockbox).

(6) If applicable, the Fedwire Transfer System telegraphic abbreviation of the offeror's financial agent.

(7) If applicable, the offeror shall also provide the name, address, telegraphic abbreviation, and 9-digit Routing Transit Number of the correspondent financial institution receiving the wire transfer payment if the offeror's financial agent is not directly on-line to the Fedwire and, therefore, not the receiver of the wire transfer payment.

(End of provision)

CLAUSES INCORPORATED BY FULL TEXT

52.233-1 DISPUTES. (JUL 2002)

(a) This contract is subject to the Contract Disputes Act of 1978, as amended (41 U.S.C. 601-613).

(b) Except as provided in the Act, all disputes arising under or relating to this contract shall be resolved under this clause.

(c) Claim, as used in this clause, means a written demand or written assertion by one of the contracting parties seeking, as a matter of right, the payment of money in a sum certain, the adjustment or interpretation of contract terms, or other relief arising under or relating to this contract. However, a written demand or written assertion by the Contractor seeking the payment of money exceeding $100,000 is not a claim under the Act until certified. A voucher, invoice, or other routine request for payment that is not in dispute when submitted is not a claim under the Act. The submission may be converted to a claim under the Act, by complying with the submission and certification requirements of this clause, if it is disputed either as to liability or amount or is not acted upon in a reasonable time.

(d)(1) A claim by the Contractor shall be made in writing and, unless otherwise stated in this contract, submitted within 6 years after accrual of the claim to the Contracting Officer for a written decision. A claim by the Government against the Contractor shall be subject to a written decision by the Contracting Officer.

(2)(i) The contractors shall provide the certification specified in subparagraph (d)(2)(iii) of this clause when submitting any claim -

(A) Exceeding $100,000; or

(B) Regardless of the amount claimed, when using -

(1) Arbitration conducted pursuant to 5 U.S.C. 575-580; or

(2) Any other alternative means of dispute resolution (ADR) technique that the agency elects to handle in accordance with the Administrative Dispute Resolution Act (ADRA).

(ii) The certification requirement does not apply to issues in controversy that have not been submitted as all or part of a claim.

(iii) The certification shall state as follows: "I certify that the claim is made in good faith; that the supporting data are accurate and complete to the best of my knowledge and belief; that the amount requested accurately reflects the contract adjustment for which the Contractor believes the Government is liable; and that I am duly authorized to certify the claim on behalf of the Contractor.

(3) The certification may be executed by any person duly authorized to bind the Contractor with respect to the claim.

(e) For Contractor claims of $100,000 or less, the Contracting Officer must, if requested in writing by the Contractor, render a decision within 60 days of the request. For Contractor-certified claims over $100,000, the

Contracting Officer must, within 60 days, decide the claim or notify the Contractor of the date by which the decision will be made.

(f) The Contracting Officer's decision shall be final unless the Contractor appeals or files a suit as provided in the Act.

(g) If the claim by the Contractor is submitted to the Contracting Officer or a claim by the Government is presented to the Contractor, the parties, by mutual consent, may agree to use alternative disput resolution (ADR). If the Contractor refuses an offer for ADR, the Contractor shall inform the Contracting Officer, in writing, of the Contractor's specific reasons for rejecting the request.

(h) The Government shall pay interest on the amount found due and unpaid from (1) the date the Contracting Officer receives the claim (certified, if required); or (2) the date that payment otherwise would be due, if that date is later, until the date of payment. With regard to claims having defective certifications, as defined in (FAR) 48 CFR 33.201, interest shall be paid from the date that the Contracting Officer initially receives the claim. Simple interest on claims shall be paid at the rate, fixed by the Secretary of the Treasury as provided in the Act, which is applicable to the period during which the Contracting Officer receives the claim and then at the rate applicable for each 6-month period as fixed by the Treasury Secretary during the pendency of the claim.

(i) The Contractor shall proceed diligently with performance of this contract, pending final resolution of any request for relief, claim, appeal, or action arising under the contract, and comply with any decision of the Contracting Officer.

(End of clause)

CLAUSES INCORPORATED BY FULL TEXT

52.233-3 PROTEST AFTER AWARD (AUG. 1996)

(a) Upon receipt of a notice of protest (as defined in FAR 33.101) or a determination that a protest is likely (see FAR 33.102(d)), the Contracting Officer may, by written order to the Contractor, direct the Contractor to stop performance of the work called for by this contract. The order shall be specifically identified as a stop-work order issued under this clause. Upon receipt of the order, the Contractor shall immediately comply with its terms and take all reasonable steps to minimize the incurrence of costs allocable to the work covered by the order during the period of work stoppage. Upon receipt of the final decision in the protest, the Contracting Officer shall either--

(1) Cancel the stop-work order; or

(2) Terminate the work covered by the order as provided in the Default, or the Termination for Convenience of the Government, clause of this contract.

(b) If a stop-work order issued under this clause is canceled either before or after a final decision in the protest, the Contractor shall resume work. The Contracting Officer shall make an equitable adjustment in the delivery schedule or contract price, or both, and the contract shall be modified, in writing, accordingly, if--

(1) The stop-work order results in an increase in the time required for, or in the Contractor's cost properly allocable to, the performance of any part of this contract; and

(2) The Contractor asserts its right to an adjustment within 30 days after the end of the period of work stoppage; provided, that if the Contracting Officer decides the facts justify the action, the Contracting Officer may receive and act upon a proposal at any time before final payment under this contract.

(c) If a stop-work order is not canceled and the work covered by the order is terminated for the convenience of the Government, the Contracting Officer shall allow reasonable costs resulting from the stop-work order in arriving at the termination settlement.

(d) If a stop-work order is not canceled and the work covered by the order is terminated for default, the Contracting Officer shall allow, by equitable adjustment or otherwise, reasonable costs resulting from the stop-work order.

(e) The Government's rights to terminate this contract at any time are not affected by action taken under this clause.

(f) If, as the result of the Contractor's intentional or negligent misstatement, misrepresentation, or miscertification, a protest related to this contract is sustained, and the Government pays costs, as provided in FAR 33.102(b)(2) or 33.104(h)(1), the Government may require the Contractor to reimburse the Government the amount of such costs. In addition to any other remedy available, and pursuant to the requirements of Subpart 32.6, the Government may collect this debt by offsetting the amount against any payment due the Contractor under any contract between the Contractor and the Government.

(End of clause)

CLAUSES INCORPORATED BY FULL TEXT

52.233-4 APPLICABLE LAW FOR BREACH OF CONTRACT CLAIM (OCT 2004)

United States law will apply to resolve any claim of breach of this contract.

(End of clause)

CLAUSES INCORPORATED BY FULL TEXT

52.236-1 PERFORMANCE OF WORK BY THE CONTRACTOR (APR 1984)

The Contractor shall perform on the site, and with its own organization, work equivalent to at least FIFTEEN (15%) percent of the total amount of work to be performed under the contract. This percentage may be reduced by a supplemental agreement to this contract if, during performing the work, the Contractor requests a reduction and the Contracting Officer determines that the reduction would be to the advantage of the Government.

(End of clause)

CLAUSES INCORPORATED BY FULL TEXT

52.236-2 DIFFERING SITE CONDITIONS (APR 1984)

(a) The Contractor shall promptly, and before the conditions are disturbed, give a written notice to the Contracting Officer of

(1) subsurface or latent physical conditions at the site which differ materially from those indicated in this contract, or

(2) unknown physical conditions at the site, of an unusual nature, which differ materially from those ordinarily

encountered and generally recognized as inhering in work of the character provided for in the contract.

(b) The Contracting Officer shall investigate the site conditions promptly after receiving the notice. If the conditions do materially so differ and cause an increase or decrease in the Contractor's cost of, or the time required for, performing any part of the work under this contract, whether or not changed as a result of the conditions, an equitable adjustment shall be made under this clause and the contract modified in writing accordingly.

(c) No request by the Contractor for an equitable adjustment to the contract under this clause shall be allowed, unless the Contractor has given the written notice required; provided, that the time prescribed in (a) above for giving written notice may be extended by the Contracting Officer.

(d) No request by the Contractor for an equitable adjustment to the contract for differing site conditions shall be allowed if made after final payment under this contract.

(End of clause)

CLAUSES INCORPORATED BY FULL TEXT

52.236-3 SITE INVESTIGATION AND CONDITIONS AFFECTING THE WORK (APR 1984)

(a) The Contractor acknowledges that it has taken steps reasonably necessary to ascertain the nature and location of the work, and that it has investigated and satisfied itself as to the general and local conditions which can affect the work or its cost, including but not limited to

(1) conditions bearing upon transportation, disposal, handling, and storage of materials;

(2) the availability of labor, water, electric power, and roads;

(3) uncertainties of weather, river stages, tides, or similar physical conditions at the site;

(4) the conformation and conditions of the ground; and (5) the character of equipment and facilities needed preliminary to and during work performance. The Contractor also acknowledges that it has satisfied itself as to the character, quality, and quantity of surface and subsurface materials or obstacles to be encountered insofar as this information is reasonably ascertainable from an inspection of the site, including all exploratory work done by the Government, as well as from the drawings and specifications made a part of this contract. Any failure of the Contractor to take the actions described and acknowledged in this paragraph will not relieve the Contractor from responsibility for estimating properly the difficulty and cost of successfully performing the work, or for proceeding to successfully perform the work without additional expense to the Government.

(b) The Government assumes no responsibility for any conclusions or interpretations made by the Contractor based on the information made available by the Government. Nor does the Government assume responsibility for any understanding reached or representation made concerning conditions which can affect the work by any of its officers or agents before the execution of this contract, unless that understanding or representation is expressly stated in this contract.

(End of clause)

CLAUSES INCORPORATED BY FULL TEXT

52.236-5 MATERIAL AND WORKMANSHIP (APR 1984)

(a) All equipment, material, and articles incorporated into the work covered by this contract shall be new and of the most suitable grade for the purpose intended, unless otherwise specifically provided in this contract. References in the specifications to equipment, material, articles, or patented processes by trade name, make, or catalog number, shall be regarded as establishing a standard of quality and shall not be construed as limiting competition. The Contractor may, at its option, use any equipment, material, article, or process that, in the judgment of the Contracting Officer, is equal to that named in the specifications, unless otherwise specifically provided in this contract.

(b) The Contractor shall obtain the Contracting Officer's approval of the machinery and mechanical and other equipment to be incorporated into the work. When requesting approval, the Contractor shall furnish to the Contracting Officer the name of the manufacturer, the model number, and other information concerning the performance, capacity, nature, and rating of the machinery and mechanical and other equipment. When required by this contract or by the Contracting Officer, the Contractor shall also obtain the Contracting Officer's approval of the material or articles which the Contractor contemplates incorporating into the work. When requesting approval, the Contractor shall provide full information concerning the material or articles. When directed to do so, the Contractor shall submit samples for approval at the Contractor's expense, with all shipping charges prepaid. Machinery, equipment, material, and articles that do not have the required approval shall be installed or used at the risk of subsequent rejection.

(c) All work under this contract shall be performed in a skillful and workmanlike manner. The Contracting Officer may require, in writing, that the Contractor remove from the work any employee the Contracting Officer deems incompetent, careless, or otherwise objectionable.

(End of clause)

CLAUSES INCORPORATED BY FULL TEXT

52.236-6 SUPERINTENDENCE BY THE CONTRACTOR (APR 1984)

At all times during performance of this contract and until the work is completed and accepted, the Contractor shall directly superintend the work or assign and have on the worksite a competent superintendent who is satisfactory to the Contracting Officer and has authority to act for the Contractor.

(End of clause)

CLAUSES INCORPORATED BY FULL TEXT

52.236-7 PERMITS AND RESPONSIBILITIES (NOV 1991)

The Contractor shall, without additional expense to the Government, be responsible for obtaining any necessary licenses and permits, and for complying with any Federal, State, and municipal laws, codes, and regulations applicable to the performance of the work. The Contractor shall also be responsible for all damages to persons or property that occur as a result of the Contractor's fault or negligence. The Contractor shall also be responsible for all materials delivered and work performed until completion and acceptance of the entire work, except for any completed unit of work which may have been accepted under the contract.

(End of clause)

CLAUSES INCORPORATED BY FULL TEXT

52.236-8 OTHER CONTRACTS (APR 1984)

The Government may undertake or award other contracts for additional work at or near the site of the work under this contract. The Contractor shall fully cooperate with the other contractors and with Government employees and shall carefully adapt scheduling and performing the work under this contract to accommodate the additional work, heeding any direction that may be provided by the Contracting Officer. The Contractor shall not commit or permit any act that will interfere with the performance of work by any other contractor or by Government employees.

(End of clause)

CLAUSES INCORPORATED BY FULL TEXT

52.236-9 PROTECTION OF EXISTING VEGETATION, STRUCTURES, EQUIPMENT, UTILITIES, AND IMPROVEMENTS (APR 1984)

(a) The Contractor shall preserve and protect all structures, equipment, and vegetation (such as trees, shrubs, and grass) on or adjacent to the work site, which are not to be removed and which do not unreasonably interfere with the work required under this contract. The Contractor shall only remove trees when specifically authorized to do so, and shall avoid damaging vegetation that will remain in place. If any limbs or branches of trees are broken during contract performance, or by the careless operation of equipment, or by workmen, the Contractor shall trim those limbs or branches with a clean cut and paint the cut with a tree-pruning compound as directed by the Contracting Officer.

(b) The Contractor shall protect from damage all existing improvements and utilities

(1) at or near the work site, and

(2) on adjacent property of a third party, the locations of which are made known to or should be known by the Contractor. The Contractor shall repair any damage to those facilities, including those that are the property of a third party, resulting from failure to comply with the requirements of this contract or failure to exercise reasonable care in performing the work. If the Contractor fails or refuses to repair the damage promptly, the Contracting Officer may have the necessary work performed and charge the cost to the Contractor.

(End of clause)

CLAUSES INCORPORATED BY FULL TEXT

52.236-10 OPERATIONS AND STORAGE AREAS (APR 1984)

(a) The Contractor shall confine all operations (including storage of materials) on Government premises to areas authorized or approved by the Contracting Officer. The Contractor shall hold and save the Government, its officers and agents, free and harmless from liability of any nature occasioned by the Contractor's performance.

(b) Temporary buildings (e.g., storage sheds, shops, offices) and utilities may be erected by the Contractor only with the approval of the Contracting Officer and shall be built with labor and materials furnished by the Contractor without expense to the Government. The temporary buildings and utilities shall remain the property of the Contractor and shall be removed by the Contractor at its expense upon completion of the work. With the written consent of the Contracting Officer, the buildings and utilities may be abandoned and need not be removed.

(c) The Contractor shall, under regulations prescribed by the Contracting Officer, use only established roadways, or use temporary roadways constructed by the Contractor when and as authorized by the Contracting Officer. When materials are transported in prosecuting the work, vehicles shall not be loaded beyond the loading capacity recommended by the manufacturer of the vehicle or prescribed by any Federal, State, or local law or regulation. When it is necessary to cross curbs or sidewalks, the Contractor shall protect them from damage. The Contractor shall repair or pay for the repair of any damaged curbs, sidewalks, or roads.

(End of clause)

CLAUSES INCORPORATED BY FULL TEXT

52.236-11 USE AND POSSESSION PRIOR TO COMPLETION (APR 1984)

(a) The Government shall have the right to take possession of or use any completed or partially completed part of the work. Before taking possession of or using any work, the Contracting Officer shall furnish the Contractor a list of items of work remaining to be performed or corrected on those portions of the work that the Government intends to take possession of or use. However, failure of the Contracting Officer to list any item of work shall not relieve the Contractor of responsibility for complying with the terms of the contract. The Government's possession or use shall not be deemed an acceptance of any work under the contract.

(b) While the Government has such possession or use, the Contractor shall be relieved of the responsibility for the loss of or damage to the work resulting from the Government's possession or use, notwithstanding the terms of the clause in this contract entitled "Permits and Responsibilities." If prior possession or use by the Government delays the progress of the work or causes additional expense to the Contractor, an equitable adjustment shall be made in the contract price or the time of completion, and the contract shall be modified in writing accordingly.

(End of clause)

CLAUSES INCORPORATED BY FULL TEXT

52.236-12 CLEANING UP (APR 1984)

The Contractor shall at all times keep the work area, including storage areas, free from accumulations of waste materials. Before completing the work, the Contractor shall remove from the work and premises any rubbish, tools, scaffolding, equipment, and materials that are not the property of the Government. Upon completing the work, the Contractor shall leave the work area in a clean, neat, and orderly condition satisfactory to the Contracting Officer.

(End of clause)

CLAUSES INCORPORATED BY FULL TEXT

52.236-13 ACCIDENT PREVENTION (NOV 1991) – ALTERNATE I (NOV 1991)

(a) The Contractor shall provide and maintain work environments and procedures which will

(1) safeguard the public and Government personnel, property, materials, supplies, and equipment exposed to Contractor operations and activities;

(2) avoid interruptions of Government operations and delays in project completion dates; and

(3) control costs in the performance of this contract.

(b) For these purposes on contracts for construction or dismantling, demolition, or removal of improvements, the Contractor shall-

(1) Provide appropriate safety barricades, signs, and signal lights;

(2) Comply with the standards issued by the Secretary of Labor at 29 CFR Part 1926 and 29 CFR Part 1910; and

(3) Ensure that any additional measures the Contracting Officer determines to be reasonably necessary for the purposes are taken.

(c) If this contract is for construction or dismantling, demolition or removal of improvements with any Department of Defense agency or component, the Contractor shall comply with all pertinent provisions of the latest version of U.S. Army Corps of Engineers Safety and Health Requirements Manual, EM 385-1-1, in effect on the date of the solicitation.

(d) Whenever the Contracting Officer becomes aware of any noncompliance with these requirements or any condition which poses a serious or imminent danger to the health or safety of the public or Government personnel, the Contracting Officer shall notify the Contractor orally, with written confirmation, and request immediate initiation of corrective action. This notice, when delivered to the Contractor or the Contractor's representative at the work site, shall be deemed sufficient notice of the noncompliance and that corrective action is required. After receiving the notice, the Contractor shall immediately take corrective action. If the Contractor fails or refuses to promptly take corrective action, the Contracting Officer may issue an order stopping all or part of the work until satisfactory corrective action has been taken. The Contractor shall not be entitled to any equitable adjustment of the contract price or extension of the performance schedule on any stop work order issued under this clause.

(e) The Contractor shall insert this clause, including this paragraph (e), with appropriate changes in the designation of the parties, in subcontracts.

(f) Before commencing the work, the Contractor shall-

(1) Submit a written proposed plan for implementing this clause. The plan shall include an analysis of the significant hazards to life, limb, and property inherent in contract work performance and a plan for controlling these hazards; and

(2) Meet with representatives of the Contracting Officer to discuss and develop a mutual understanding relative to administration of the overall safety program.

(End of clause)

CLAUSES INCORPORATED BY FULL TEXT

52.236-15 SCHEDULES FOR CONSTRUCTION CONTRACTS (APR 1984)

(a) The Contractor shall, within five days after the work commences on the contract or another period of time determined by the Contracting Officer, prepare and submit to the Contracting Officer for approval three copies of a practicable schedule showing the order in which the Contractor proposes to perform the work, and the dates on which the Contractor contemplates starting and completing the several salient features of the work (including acquiring materials, plant, and equipment). The schedule shall be in the form of a progress chart of suitable scale to indicate appropriately the percentage of work scheduled for completion by any given date during the period. If the Contractor fails to submit a schedule within the time prescribed, the Contracting Officer may withhold approval of progress payments until the Contractor submits the required schedule.

(b) The Contractor shall enter the actual progress on the chart as directed by the Contracting Officer, and upon doing so shall immediately deliver three copies of the annotated schedule to the Contracting Officer. If, in the opinion of the Contracting Officer, the Contractor falls behind the approved schedule, the Contractor shall take steps necessary to improve its progress, including those that may be required by the Contracting Officer, without additional cost to the Government. In this circumstance, the Contracting Officer may require the Contractor to increase the number of shifts, overtime operations, days of work, and/or the amount of construction plant, and to submit for approval any supplementary schedule or schedules in chart form as the Contracting Officer deems necessary to demonstrate how the approved rate of progress will be regained.

(c) Failure of the Contractor to comply with the requirements of the Contracting Officer under this clause shall be grounds for a determination by the Contracting Officer that the Contractor is not prosecuting the work with sufficient diligence to ensure completion within the time specified in the contract. Upon making this determination, the Contracting Officer may terminate the Contractor's right to proceed with the work, or any separable part of it, in accordance with the default terms of this contract.

(End of clause)

CLAUSES INCORPORATED BY FULL TEXT

52.236-17 LAYOUT OF WORK (APR 1984)

The Contractor shall lay out its work from Government established base lines and bench marks indicated on the drawings, and shall be responsible for all measurements in connection with the layout. The Contractor shall furnish, at its own expense, all stakes, templates, platforms, equipment, tools, materials, and labor required to lay out any part of the work. The Contractor shall be responsible for executing the work to the lines and grades that may be established or indicated by the Contracting Officer. The Contractor shall also be responsible for maintaining and preserving all stakes and other marks established by the Contracting Officer until authorized to remove them. If such marks are destroyed by the Contractor or through its negligence before their removal is authorized, the Contracting Officer may replace them and deduct the expense of the replacement from any amounts due or to become due to the Contractor.

(End of clause)

CLAUSES INCORPORATED BY FULL TEXT

52.236-21 SPECIFICATIONS AND DRAWINGS FOR CONSTRUCTION (FEB 1997) - ALTERNATE I (APR 1984

(a) The Contractor shall keep on the work site a copy of the drawings and specifications and shall at all times give the Contracting Officer access thereto. Anything mentioned in the specifications and not shown on the drawings, or shown on the drawings and not mentioned in the specifications, shall be of like effect as if shown or mentioned in both. In case of difference between drawings and specifications, the specifications shall govern. In case of discrepancy in the figures, in the drawings, or in the specifications, the matter shall be promptly submitted to the Contracting Officer, who shall promptly make a determination in writing. Any adjustment by the Contractor without such a determination shall be at its own risk and expense. The Contracting Officer shall furnish from time to time such detailed drawings and other information as considered necessary, unless otherwise provided.

(b) Wherever in the specifications or upon the drawings the words "directed", "required", "ordered", "designated", "prescribed", or words of like import are used, it shall be understood that the "direction", "requirement", "order", "designation", or "prescription", of the Contracting Officer is intended and similarly the words "approved", "acceptable", "satisfactory", or words of like import shall mean "approved by," or "acceptable to", or "satisfactory to" the Contracting Officer, unless otherwise expressly stated.

(c) Where "as shown," as indicated", "as detailed", or words of similar import are used, it shall be understood that the reference is made to the drawings accompanying this contract unless stated otherwise. The word "provided" as used herein shall be understood to mean "provide complete in place," that is "furnished and installed".

(d) Shop drawings means drawings, submitted to the Government by the Contractor, subcontractor, or any lower tier subcontractor pursuant to a construction contract, showing in detail (1) the proposed fabrication and assembly of structural elements, and (2) the installation (i.e., fit, and attachment details) of materials or equipment. It includes drawings, diagrams, layouts, schematics, descriptive literature, illustrations, schedules, performance and test data, and similar materials furnished by the contractor to explain in detail specific portions of the work required by the contract. The Government may duplicate, use, and disclose in any manner and for any purpose shop drawings delivered under this contract.

(e) If this contract requires shop drawings, the Contractor shall coordinate all such drawings, and review them for accuracy, completeness, and compliance with contract requirements and shall indicate its approval thereon as evidence of such coordination and review. Shop drawings submitted to the Contracting Officer without evidence of the Contractor's approval may be returned for resubmission. The Contracting Officer will indicate an approval or disapproval of the shop drawings and if not approved as submitted shall indicate the Government's reasons therefor. Any work done before such approval shall be at the Contractor's risk. Approval by the Contracting Officer shall not relieve the Contractor from responsibility for any errors or omissions in such drawings, nor from responsibility for complying with the requirements of this contract, except with respect to variations described and approved in accordance with (f) below.

(f) If shop drawings show variations from the contract requirements, the Contractor shall describe such variations in writing, separate from the drawings, at the time of submission. If the Contracting Officer approves any such variation, the Contracting Officer shall issue an appropriate contract modification, except that, if the variation is minor or does not involve a change in price or in time of performance, a modification need not be issued.

(g) The Contractor shall submit to the Contracting Officer for approval four copies (unless otherwise indicated) of all shop drawings as called for under the various headings of these specifications. Three sets (unless otherwise indicated) of all shop drawings, will be retained by the Contracting Officer and one set will be returned to the Contractor. Upon completing the work under this contract, the Contractor shall furnish a complete set of all shop drawings as finally approved. These drawings shall show all changes and revisions made up to the time the equipment is completed and accepted.

(End of clause)

CLAUSES INCORPORATED BY FULL TEXT

52.236-23 RESPONSIBILITY OF THE ARCHITECT-ENGINEER CONTRACTOR (APR 1984)

(a) The Contractor shall be responsible for the professional quality, technical accuracy, and the coordination of all designs, drawings, specifications, and other services furnished by the Contractor under this contract. The Contractor shall, without additional compensation, correct or revise any errors or deficiencies in its designs, drawings, specifications, and other services.

(b) Neither the Government's review, approval or acceptance of, nor payment for, the services required under this contract shall be construed to operate as a waiver of any rights under this contract or of any cause of action arising out of the performance of this contract, and the Contractor shall be and remain liable to the Government in accordance with applicable law for all damages to the Government caused by the Contractor's negligent performance of any of the services furnished under this contract.

(c) The rights and remedies of the Government provided for under this contract are in addition to any other rights and remedies provided by law.

(d) If the Contractor is comprised of more than one legal entity, each such entity shall be jointly and severally liable hereunder.

(End of clause)

CLAUSES INCORPORATED BY FULL TEXT

52.236-24 WORK OVERSIGHT IN ARCHITECT-ENGINEER CONTRACTS (APR 1984)

The extent and character of the work to be done by the Contractor shall be subject to the general oversight, supervision, direction, control, and approval of the Contracting Officer.

(End of clause)

CLAUSES INCORPORATED BY FULL TEXT

52.236-25 REQUIREMENTS FOR REGISTRATION OF DESIGNERS (JUN 2003)

Architects or engineers registered to practice in the particular professional field involved in a State, the District of Columbia, or an outlying area of the United States shall prepare or review and approve the design of architectural, structural, mechanical, electrical, civil, or other engineering features of the work.

(End of clause)

CLAUSES INCORPORATED BY FULL TEXT

52.236-26 PRECONSTRUCTION CONFERENCE (FEB 1995)

If the Contracting Officer decides to conduct a preconstruction conference, the successful offeror will be notified and will be required to attend. The Contracting Officer's notification will include specific details regarding the date, time, and location of the conference, any need for attendance by subcontractors, and information regarding the items to be discussed.

(End of clause)

CLAUSES INCORPORATED BY FULL TEXT

52.242-13 BANKRUPTCY (JUL 1995)

In the event the Contractor enters into proceedings relating to bankruptcy, whether voluntary or involuntary, the Contractor agrees to furnish, by certified mail or electronic commerce method authorized by the contract, written notification of the bankruptcy to the Contracting Officer responsible for administering the contract. This notification shall be furnished within five days of the initiation of the proceedings relating to bankruptcy filing. This notification shall include the date on which the bankruptcy petition was filed, the identity of the court in which the bankruptcy petition was filed, and a listing of Government contract numbers and contracting offices for all Government contracts against which final payment has not been made. This obligation remains in effect until final payment under this contract.

(End of clause)

CLAUSES INCORPORATED BY FULL TEXT

52.242-14 SUSPENSION OF WORK (APR 1984)

(a) The Contracting Officer may order the Contractor, in writing, to suspend, delay, or interrupt all or any part of the work of this contract for the period of time that the Contracting Officer determines appropriate for the convenience of the Government.

(b) If the performance of all or any part of the work is, for an unreasonable period of time, suspended, delayed, or interrupted (1) by an act of the Contracting Officer in the administration of this contract, or (2) by the Contracting Officer's failure to act within the time specified in this contract (or within a reasonable time if not specified), an adjustment shall be made for any increase in the cost of performance of this contract (excluding profit) necessarily caused by the unreasonable suspension, delay, or interruption, and the contract modified in writing accordingly. However, no adjustment shall be made under this clause for any suspension, delay, or interruption to the extent that performance would have been so suspended, delayed, or interrupted by any other cause, including the fault or negligence of the Contractor, or for which an equitable adjustment is provided for or excluded under any other term or condition of this contract. (c) A claim under this clause shall not be allowed (1) for any costs incurred more than 20 days before the Contractor shall have notified the Contracting Officer in writing of the act or failure to act involved (but this requirement shall not apply as to a claim resulting from a suspension order), and (2) unless the claim, in an amount stated, is asserted in writing as soon as practicable after the termination of the suspension, delay, or interruption, but not later than the date of final payment under the contract.

(End of clause)

CLAUSES INCORPORATED BY FULL TEXT

52.243-4 CHANGES (AUG 1987)

(a) The Contracting Officer may, at any time, without notice to the sureties, if any, by written order designated or indicated to be a change order, make changes in the work within the general scope of the contract, including changes--

(1) In the specifications (including drawings and designs);

(2) In the method or manner of performance of the work;

(3) In the Government-furnished facilities, equipment, materials, services, or site; or

(4) Directing acceleration in the performance of the work.

(b) Any other written or oral order (which, as used in this paragraph (b), includes direction, instruction, interpretation, or determination) from the Contracting Officer that causes a change shall be treated as a change order under this clause; provided, that the Contractor gives the Contracting Officer written notice stating

(1) the date, circumstances, and source of the order and

(2) that the Contractor regards the order as a change order.

(c) Except as provided in this clause, no order, statement, or conduct of the Contracting Officer shall be treated as a change under this clause or entitle the Contractor to an equitable adjustment.

(d) If any change under this clause causes an increase or decrease in the Contractor's cost of, or the time required for, the performance of any part of the work under this contract, whether or not changed by any such order, the Contracting Officer shall make an equitable adjustment and modify the contract in writing. However, except for an adjustment based on defective specifications, no adjustment for any change under paragraph (b) of this clause shall be made for any costs incurred more than 20 days before the Contractor gives written notice as required. In the case of defective specifications for which the Government is responsible, the equitable adjustment shall include any increased cost reasonably incurred by the Contractor in attempting to comply with the defective specifications.

(e) The Contractor must assert its right to an adjustment under this clause within 30 days after

(1) receipt of a written change order under paragraph (a) of this clause or (2) the furnishing of a written notice under paragraph (b) of this clause, by submitting to the Contracting Officer a written statement describing the general nature and amount of the proposal, unless this period is extended by the Government. The statement of proposal for adjustment may be included in the notice under paragraph (b) above.

(f) No proposal by the Contractor for an equitable adjustment shall be allowed if asserted after final payment under this contract.

(End of clause)

CLAUSES INCORPORATED BY FULL TEXT

52.243-6 CHANGE ORDER ACCOUNTING (APR 1984)

The Contracting Officer may require change order accounting whenever the estimated cost of a change or series of related changes exceeds $100,000. The Contractor, for each change or series of related changes, shall maintain separate accounts, by job order or other suitable accounting procedure, of all incurred segregable, direct costs (less allocable credits) of work, both changed and not changed, allocable to the change. The Contractor shall maintain such accounts until the parties agree to an equitable adjustment for the changes ordered by the Contracting Officer or the matter is conclusively disposed of in accordance with the Disputes clause.

(End of clause)

CLAUSES INCORPORATED BY FULL TEXT

52.244-4 SUBCONTRACTORS AND OUTSIDE ASSOCIATES AND CONSULTANTS (ARCHITECT-ENGINEER SERVICES) (AUG 1998)

Any subcontractors and outside associates or consultants required by the Contractor in connection with the services covered by the contract will be limited to individuals or firms that were specifically identified and agreed to during negotiations. The Contractor shall obtain the Contracting Officer's written consent before making any substitution for these subcontractors, associates, or consultants.

(End of clause)

CLAUSES INCORPORATED BY FULL TEXT

52.244-5 COMPETITION IN SUBCONTRACTING (DEC 1996)

(a) The Contractor shall select subcontractors (including suppliers) on a competitive basis to the maximum practical extent consistent with the objectives and requirements of the contract.

(b) If the Contractor is an approved mentor under the Department of Defense Pilot Mentor-Protege Program (Pub. L. 101–510, section 831 as amended), the Contractor may award subcontracts under this contract on a noncompetitive basis to its proteges.

(End of clause)

CLAUSES INCORPORATED BY FULL TEXT

52.246-21 WARRANTY OF CONSTRUCTION (MAR 1994)

(a) In addition to any other warranties in this contract, the Contractor warrants, except as provided in paragraph (i) of this clause, that work performed under this contract conforms to the contract requirements and is free of any defect in equipment, material, or design furnished, or workmanship performed by the Contractor or any subcontractor or supplier at any tier.

(b) This warranty shall continue for a period of 1 year from the date of final acceptance of the work. If the Government takes possession of any part of the work before final acceptance, this warranty shall continue for a period of 1 year from the date the Government takes possession.

(c) The Contractor shall remedy at the Contractor's expense any failure to conform, or any defect. In addition, the Contractor shall remedy at the Contractor's expense any damage to Government-owned or controlled real or personal property, when that damage is the result of--

(1) The Contractor's failure to conform to contract requirements; or

(2) Any defect of equipment, material, workmanship, or design furnished.

(d) The Contractor shall restore any work damaged in fulfilling the terms and conditions of this clause. The Contractor's warranty with respect to work repaired or replaced will run for 1 year from the date of repair or replacement.

(e) The Contracting Officer shall notify the Contractor, in writing, within a reasonable time after the discovery of any failure, defect, or damage.

(f) If the Contractor fails to remedy any failure, defect, or damage within a reasonable time after receipt of notice, the Government shall have the right to replace, repair, or otherwise remedy the failure, defect, or damage at the Contractor's expense.
(g) With respect to all warranties, express or implied, from subcontractors, manufacturers, or suppliers for work performed and materials furnished under this contract, the Contractor shall--

(1) Obtain all warranties that would be given in normal commercial practice;

(2) Require all warranties to be executed, in writing, for the benefit of the Government, if directed by the Contracting Officer; and

(3) Enforce all warranties for the benefit of the Government, if directed by the Contracting Officer.

(h) In the event the Contractor's warranty under paragraph (b) of this clause has expired, the Government may bring suit at its expense to enforce a subcontractor's, manufacturer's, or supplier's warranty.

(i) Unless a defect is caused by the negligence of the Contractor or subcontractor or supplier at any tier, the Contractor shall not be liable for the repair of any defects of material or design furnished by the Government nor for the repair of any damage that results from any defect in Government-furnished material or design.

(j) This warranty shall not limit the Government's rights under the Inspection and Acceptance clause of this contract with respect to latent defects, gross mistakes, or fraud.

(End of clause)

CLAUSES INCORPORATED BY FULL TEXT

52.247-34 F.O.B. DESTINATION (NOV 1991)

(a) The term "f.o.b. destination," as used in this clause, means--

(1) Free of expense to the Government, on board the carrier's conveyance, at a specified delivery point where the consignee's facility (plant, warehouse, store, lot, or other location to which shipment can be made) is located; and

(2) Supplies shall be delivered to the destination consignee's wharf (if destination is a port city and supplies are for export), warehouse unloading platform, or receiving dock, at the expense of the Contractor. The Government shall not be liable for any delivery, storage, demurrage, accessorial, or other charges involved before the actual delivery (or "constructive placement" as defined in carrier tariffs) of the supplies to the destination, unless such charges are caused by an act or order of the Government acting in its contractual capacity. If rail carrier is used, supplies shall be delivered to the specified unloading platform of the consignee. If motor carrier (including "piggyback") is used, supplies shall be delivered to truck tailgate at the unloading platform of the consignee, except when the supplies delivered meet the requirements of Item 568 of the National Motor Freight Classification for "heavy or bulky freight." When supplies meeting the requirements of the referenced Item 568 are delivered, unloading (including movement to the tailgate) shall be performed by the consignee, with assistance from the truck driver, if requested. If the contractor uses rail carrier or freight forwarded for less than carload shipments, the contractor shall ensure that the carrier will furnish tailgate delivery, when required, if transfer to truck is required to complete delivery to consignee.

(b) The Contractor shall--

(1)(i) Pack and mark the shipment to comply with contract specifications; or

(ii) In the absence of specifications, prepare the shipment in conformance with carrier requirements;

(2) Prepare and distribute commercial bills of lading;

(3) Deliver the shipment in good order and condition to the point of delivery specified in the contract;

(4) Be responsible for any loss of and/or damage to the goods occurring before receipt of the shipment by the consignee at the delivery point specified in the contract;

(5) Furnish a delivery schedule and designate the mode of delivering carrier; and

(6) Pay and bear all charges to the specified point of delivery.

(End of clause)

CLAUSES INCORPORATED BY FULL TEXT

52.247-63 PREFERENCE FOR U.S.-FLAG AIR CARRIERS (JUN 2003)

(a) Definitions. As used in this clause--

International air transportation means transportation by air between a place in the United States and a place outside the United States or between two places both of which are outside the United States.

United States means the 50 States, the District of Columbia, and outlying areas.

U.S.-flag air carrier means an air carrier holding a certificate under 49 U.S.C. Chapter 411.

(b) Section 5 of the International Air Transportation Fair Competitive Practices Act of 1974 (49 U.S.C. 40118) (Fly America Act) requires that all Federal agencies and Government contractors and subcontractors use U.S.-flag air

carriers for U.S. Government-financed international air transportation of personnel (and their personal effects) or property, to the extent that service by those carriers is available. It requires the Comptroller General of the United States, in the absence of satisfactory proof of the necessity for foreign-flag air transportation, to disallow expenditures from funds, appropriated or otherwise established for the account of the United States, for international air transportation secured aboard a foreign-flag air carrier if a U.S.-flag air carrier is available to provide such services.

(c) If available, the Contractor, in performing work under this contract, shall use U.S.-flag carriers for international air transportation of personnel (and their personal effects) or property.

(d) In the event that the Contractor selects a carrier other than a U.S.-flag air carrier for international air transportation, the Contractor shall include a statement on vouchers involving such transportation essentially as follows:

STATEMENT OF UNAVAILABILITY OF U.S.-FLAG AIR CARRIERS

International air transportation of persons (and their personal effects) or property by U.S.-flag air carrier was not available or it was necessary to use foreign-flag air carrier service for the following reasons (see section 47.403 of the Federal Acquisition Regulation): [State reasons]: _____

(End of statement)

(e) The Contractor shall include the substance of this clause, including this paragraph (e), in each subcontract or purchase under this contract that may involve international air transportation.

(End of clause)

CLAUSES INCORPORATED BY FULL TEXT

52.248-3 VALUE ENGINEERING--CONSTRUCTION (SEP 2006)

(a) General. The Contractor is encouraged to develop, prepare, and submit value engineering change proposals (VECP's) voluntarily. The Contractor shall share in any instant contract savings realized from accepted VECP's, in accordance with paragraph (f) below.

(b) Definitions. "Collateral costs," as used in this clause, means agency costs of operation, maintenance, logistic support, or Government-furnished property.

"Collateral savings," as used in this clause, means those measurable net reductions resulting from a VECP in the agency's overall projected collateral costs, exclusive of acquisition savings, whether or not the acquisition cost changes.

"Contractor's development and implementation costs," as used in this clause, means those costs the Contractor incurs on a VECP specifically in developing, testing, preparing, and submitting the VECP, as well as those costs the Contractor incurs to make the contractual changes required by Government acceptance of a VECP.

"Government costs," as used in this clause, means those agency costs that result directly from developing and implementing the VECP, such as any net increases in the cost of testing, operations, maintenance, and logistic support. The term does not include the normal administrative costs of processing the VECP.

"Instant contract savings," as used in this clause, means the estimated reduction in Contractor cost of performance resulting from acceptance of the VECP, minus allowable Contractor's development and implementation costs, including subcontractors' development and implementation costs (see paragraph (h) below).

"Value engineering change proposal (VECP)" means a proposal that--

(1) Requires a change to this, the instant contract, to implement; and

(2) Results in reducing the contract price or estimated cost without impairing essential functions or characteristics; provided, that it does not involve a change--

(i) In deliverable end item quantities only; or

(ii) To the contract type only.

(c) VECP preparation. As a minimum, the Contractor shall include in each VECP the information described in subparagraphs (1) through (7) below. If the proposed change is affected by contractually required configuration management or similar procedures, the instructions in those procedures relating to format, identification, and priority assignment shall govern VECP preparation. The VECP shall include the following:

(1) A description of the difference between the existing contract requirement and that proposed, the comparative advantages and disadvantages of each, a justification when an item's function or characteristics are being altered, and the effect of the change on the end item's performance.

(2) A list and analysis of the contract requirements that must be changed if the VECP is accepted, including any suggested specification revisions.

(3) A separate, detailed cost estimate for

(i) the affected portions of the existing contract requirement and

(ii) the VECP. The cost reduction associated with the VECP shall take into account the Contractor's allowable development and implementation costs, including any amount attributable to subcontracts under paragraph (h) below.

(4) A description and estimate of costs the Government may incur in implementing the VECP, such as test and evaluation and operating and support costs.

(5) A prediction of any effects the proposed change would have on collateral costs to the agency.

(6) A statement of the time by which a contract modification accepting the VECP must be issued in order to achieve the maximum cost reduction, noting any effect on the contract completion time or delivery schedule.

(7) Identification of any previous submissions of the VECP, including the dates submitted, the agencies and contract numbers involved, and previous Government actions, if known.

(d) Submission. The Contractor shall submit VECP's to the Resident Engineer at the worksite, with a copy to the Contracting Officer.

(e) Government action.

(1) The Contracting Officer will notify the Contractor of the status of the VECP within 45 calendar days after the contracting office receives it. If additional time is required, the Contracting Officer will notify the Contractor within

the 45-day period and provide the reason for the delay and the expected date of the decision. The Government will process VECP's expeditiously; however, it shall not be liable for any delay in acting upon a VECP.

If the VECP is not accepted, the Contracting Officer will notify the Contractor in writing, explaining the reasons for rejection. The Contractor may withdraw any VECP, in whole or in part, at any time before it is accepted by the Government. The Contracting Officer may require that the Contractor provide written notification before undertaking significant expenditures for VECP effort.

Any VECP may be accepted, in whole or in part, by the Contracting Officer's award of a modification to this contract citing this clause. The Contracting Officer may accept the VECP, even though an agreement on price reduction has not been reached, by issuing the Contractor a notice to proceed with the change. Until a notice to proceed is issued or a contract modification applies a VECP to this contract, the Contractor shall perform in accordance with the existing contract. The decision to accept or reject all or part of any VECP is a unilateral decision made solely at the discretion of the Contracting Officer.

(f) Sharing.

(1) Rates. The Government's share of savings is determined by subtracting Government costs from instant contract savings and multiplying the result by

(i) 45 percent for fixed-price contracts or

(ii) 75 percent for cost-reimbursement contracts.

(2) Payment. Payment of any share due the Contractor for use of a VECP on this contract shall be authorized by a modification to this contract to--

(i) Accept the VECP;

(ii) Reduce the contract price or estimated cost by the amount of instant contract savings; and

(iii) Provide the Contractor's share of savings by adding the amount calculated to the contract price or fee.

(g) Collateral savings. If a VECP is accepted, the Contracting Officer will increase the instant contract amount by 20 percent of any projected collateral savings determined to be realized in a typical year of use after subtracting any Government costs not previously offset. However, the Contractor's share of collateral savings will not exceed the contract's firm-fixed-price or estimated cost, at the time the VECP is accepted, or $100,000, whichever is greater. The Contracting Officer is the sole determiner of the amount of collateral savings.

(h) Subcontracts. The Contractor shall include an appropriate value engineering clause in any subcontract of $55,000 or more and may include one in subcontracts of lesser value. In computing any adjustment in this contract's price under paragraph (f) above, the Contractor's allowable development and implementation costs shall include any subcontractor's allowable development and implementation costs clearly resulting from a VECP accepted by the Government under this contract, but shall exclude any value engineering incentive payments to a subcontractor. The Contractor may choose any arrangement for subcontractor value engineering incentive payments; provided, that these payments shall not reduce the Government's share of the savings resulting from the VECP.

(i) Data. The Contractor may restrict the Government's right to use any part of a VECP or the supporting data by marking the following legend on the affected parts:

"These data, furnished under the Value Engineering-- Construction clause of contract . . . . . , shall not be disclosed outside the Government or duplicated, used, or disclosed, in whole or in part, for any purpose other than to evaluate a value engineering change proposal submitted under the clause. This restriction does not limit the

Government's right to use information contained in these data if it has been obtained or is otherwise available from the Contractor or from another source without limitations." If a VECP is accepted, the Contractor hereby grants the Government unlimited rights in the VECP and supporting data, except that, with respect to data qualifying and submitted as limited rights technical data, the Government shall have the rights specified in the contract modification implementing the VECP and shall appropriately mark the data. (The terms "unlimited rights" and "limited rights" are defined in Part 27 of the Federal Acquisition Regulation.)

(End of clause)

CLAUSES INCORPORATED BY FULL TEXT

52.249-2 TERMINATION FOR CONVENIENCE OF THE GOVERNMENT (FIXED-PRICE) (MAY 2004) - ALTERNATE I (SEP 1996)

(a) The Government may terminate performance of work under this contract in whole or, from time to time, in part if the Contracting Officer determines that a termination is in the Government's interest. The Contracting Officer shall terminate by delivering to the Contractor a Notice of Termination specifying the extent of termination and the effective date.

(b) After receipt of a Notice of Termination, and except as directed by the Contracting Officer, the Contractor shall immediately proceed with the following obligations, regardless of any delay in determining or adjusting any amounts due under this clause:

(1) Stop work as specified in the notice.

(2) Place no further subcontracts or orders (referred to as subcontracts in this clause) for materials, services, or facilities, except as necessary to complete the continued portion of the contract.

(3) Terminate all subcontracts to the extent they relate to the work terminated.

(4) Assign to the Government, as directed by the Contracting Officer, all right, title, and interest of the Contractor under the subcontracts terminated, in which case the Government shall have the right to settle or to pay any termination settlement proposal arising out of those terminations.

(5) With approval or ratification to the extent required by the Contracting Officer, settle all outstanding liabilities and termination settlement proposals arising from the termination of subcontracts; the approval or ratification will be final for purposes of this clause.

(6) As directed by the Contracting Officer, transfer title and deliver to the Government (i) the fabricated or unfabricated parts, work in process, completed work, supplies, and other material produced or acquired for the work terminated, and (ii) the completed or partially completed plans, drawings, information, and other property that, if the contract had been completed, would be required to be furnished to the Government.

(7) Complete performance of the work not terminated.

(8) Take any action that may be necessary, or that the Contracting Officer may direct, for the protection and preservation of the property related to this contract that is in the possession of the Contractor and in which the Government has or may acquire an interest.

(9) Use its best efforts to sell, as directed or authorized by the Contracting Officer, any property of the types referred to in subparagraph (b)(6) of this clause; provided, however, that the Contractor (i) is not required to extend

credit to any purchaser and (ii) may acquire the property under the conditions prescribed by, and at prices approved by, the Contracting Officer. The proceeds of any transfer or disposition will be applied to reduce any payments to be made by the Government under this contract, credited to the price or cost of the work, or paid in any other manner directed by the Contracting Officer.

(c) The Contractor shall submit complete termination inventory schedules no later than 120 days from the effective date of termination, unless extended in writing by the Contracting Officer upon written request of the Contractor within this 120-day period.

(d) After expiration of the plant clearance period as defined in Subpart 49.001 of the Federal Acquisition Regulation, the Contractor may submit to the Contracting Officer a list, certified as to quantity and quality, of termination inventory not previously disposed of, excluding items authorized for disposition by the Contracting Officer. The Contractor may request the Government to remove those items or enter into an agreement for their storage. Within 15 days, the Government will accept title to those items and remove them or enter into a storage agreement. The Contracting Officer may verify the list upon removal of the items, or if stored, within 45 days from submission of the list, and shall correct the list, as necessary, before final settlement.

(e) After termination, the Contractor shall submit a final termination settlement proposal to the Contracting Officer in the form and with the certification prescribed by the Contracting Officer. The Contractor shall submit the proposal promptly, but no later than 1 year from the effective date of termination, unless extended in writing by the Contracting Officer upon written request of the Contractor within this 1-year period. However, if the Contracting Officer determines that the facts justify it, a termination settlement proposal may be received and acted on after 1 year or any extension. If the Contractor fails to submit the proposal within the time allowed, the Contracting Officer may determine, on the basis of information available, the amount, if any, due the Contractor because of the termination and shall pay the amount determined.

(f) Subject to paragraph (e) of this clause, the Contractor and the Contracting Officer may agree upon the whole or any part of the amount to be paid or remaining to be paid because of the termination. The amount may include a reasonable allowance for profit on work done. However, the agreed amount, whether under this paragraph (g) or paragraph (g) of this clause, exclusive of costs shown in subparagraph (g)(3) of this clause, may not exceed the total contract price as reduced by (1) the amount of payments previously made and (2) the contract price of work not terminated. The contract shall be modified, and the Contractor paid the agreed amount. Paragraph (g) of this clause shall not limit, restrict, or affect the amount that may be agreed upon to be paid under this paragraph.

(g) If the Contractor and Contracting Officer fail to agree on the whole amount to be paid the Contractor because of the termination of work, the Contracting Officer shall pay the Contractor the amounts determined as follows, but without duplication of any amounts agreed upon under paragraph (f) of this clause:

(1) For contract work performed before the effective date of termination, the total (without duplication of any items) of--

(i) The cost of this work;

(ii) The cost of settling and paying termination settlement proposals under terminated subcontracts that are properly chargeable to the terminated portion of the contract if not included in subdivision (g)(1)(i) of this clause; and

(iii) A sum, as profit on subdivision (g)(1)(i) of this clause, determined by the Contracting Officer under 49.202 of the Federal Acquisition Regulation, in effect on the date of this contract, to be fair and reasonable; however, if it appears that the Contractor would have sustained a loss on the entire contract had it been completed, the Contracting Officer shall allow no profit under this subdivision (iii) and shall reduce the settlement to reflect the indicated rate of loss.

(2) The reasonable costs of settlement of the work terminated, including--

(i) Accounting, legal, clerical, and other expenses reasonably necessary for the preparation of termination settlement proposals and supporting data;

(ii) The termination and settlement of subcontracts (excluding the amounts of such settlements); and

(iii) Storage, transportation, and other costs incurred, reasonably necessary for the preservation, protection, or disposition of the termination inventory.

(h) Except for normal spoilage, and except to the extent that the Government expressly assumed the risk of loss, the Contracting Officer shall exclude from the amounts payable to the Contractor under paragraph (g) of this clause, the fair value, as determined by the Contracting Officer, of property that is destroyed, lost, stolen, or damaged so as to become undeliverable to the Government or to a buyer.

(i) The cost principles and procedures of Part 31 of the Federal Acquisition Regulation, in effect on the date of this contract, shall govern all costs claimed, agreed to, or determined under this clause.

(j) The Contractor shall have the right of appeal, under the Disputes clause, from any determination made by the Contracting Officer under paragraph (e), (g), or (l) of this clause, except that if the Contractor failed to submit the termination settlement proposal or request for equitable adjustment within the time provided in paragraph (e) or (l), respectively, and failed to request a time extension, there is no right of appeal.

(k) In arriving at the amount due the Contractor under this clause, there shall be deducted--

(1) All unliquidated advance or other payments to the Contractor under the terminated portion of this contract;

(2) Any claim which the Government has against the Contractor under this contract; and

(3) The agreed price for, or the proceeds of sale of, materials, supplies, or other things acquired by the Contractor or sold under the provisions of this clause and not recovered by or credited to the Government.

(l) If the termination is partial, the Contractor may file a proposal with the Contracting Officer for an equitable adjustment of the price(s) of the continued portion of the contract. The Contracting Officer shall make any equitable adjustment agreed upon. Any proposal by the Contractor for an equitable adjustment under this clause shall be requested within 90 days from the effective date of termination unless extended in writing by the Contracting Officer.

(m)(1) The Government may, under the terms and conditions it prescribes, make partial payments and payments against costs incurred by the Contractor for the terminated portion of the contract, if the Contracting Officer believes the total of these payments will not exceed the amount to which the Contractor will be entitled.

(2) If the total payments exceed the amount finally determined to be due, the Contractor shall repay the excess to the Government upon demand, together with interest computed at the rate established by the Secretary of the Treasury under 50 U.S.C. App. 1215(b)(2). Interest shall be computed for the period from the date the excess payment is received by the Contractor to the date the excess is repaid. Interest shall not be charged on any excess payment due to a reduction in the Contractor's termination settlement proposal because of retention or other disposition of termination inventory until 10 days after the date of the retention or disposition, or a later date determined by the Contracting Officer because of the circumstances.

(n) Unless otherwise provided in this contract or by statute, the Contractor shall maintain all records and documents relating to the terminated portion of this contract for 3 years after final settlement. This includes all books and other evidence bearing on the Contractor's costs and expenses under this contract. The Contractor shall make these records and documents available to the Government, at the Contractor's office, at all reasonable times, without any direct charge. If approved by the Contracting Officer, photographs, microphotographs, or other authentic reproductions may be maintained instead of original records and documents.

CLAUSES INCORPORATED BY FULL TEXT

52.249-10 DEFAULT (FIXED-PRICE CONSTRUCTION) (APR 1984)

(a) If the Contractor refuses or fails to prosecute the work or any separable part, with the diligence that will insure its completion within the time specified in this contract including any extension, or fails to complete the work within this time, the Government may, by written notice to the Contractor, terminate the right to proceed with the work (or the separable part of the work) that has been delayed. In this event, the Government may take over the work and complete it by contract or otherwise, and may take possession of and use any materials, appliances, and plant on the work site necessary for completing the work. The Contractor and its sureties shall be liable for any damage to the Government resulting from the Contractor's refusal or failure to complete the work within the specified time, whether or not the Contractor's right to proceed with the work is terminated. This liability includes any increased costs incurred by the Government in completing the work.

(b) The Contractor's right to proceed shall not be terminated nor the Contractor charged with damages under this clause, if--

(1) The delay in completing the work arises from unforeseeable causes beyond the control and without the fault or negligence of the Contractor. Examples of such causes include

(i) acts of God or of the public enemy,

(ii) acts of the Government in either its sovereign or contractual capacity,

(iii) acts of another Contractor in the performance of a contract with the Government,

(iv) fires,

(v) floods,

(vi) epidemics,

(vii) quarantine restrictions,

(viii) strikes,

(ix) freight embargoes,

(x) unusually severe weather, or delays of subcontractors or suppliers at any tier arising from unforeseeable causes beyond the control and without the fault or negligence of both the Contractor and the subcontractors or suppliers; and

(2) The Contractor, within 10 days from the beginning of any delay (unless extended by the Contracting Officer), notifies the Contracting Officer in writing of the causes of delay. The Contracting Officer shall ascertain the facts and the extent of delay. If, in the judgment of the Contracting Officer, the findings of fact warrant such action, the time for completing the work shall be extended. The findings of the Contracting Officer shall be final and conclusive on the parties, but subject to appeal under the Disputes clause.

(c) If, after termination of the Contractor's right to proceed, it is determined that the Contractor was not in default, or that the delay was excusable, the rights and obligations of the parties will be the same as if the termination had been issued for the convenience of the Government.

The rights and remedies of the Government in this clause are in addition to any other rights and remedies provided by law or under this contract.

(End of clause)

CLAUSES INCORPORATED BY FULL TEXT

52.249-5000 BASIS FOR SETTLEMENT OF PROPOSALS

Actual costs will be used to determine equipment costs for a settlement proposal submitted on the total cost basis under FAR 49.206-2(b). In evaluating a terminations settlement proposal using the total cost basis, the following principles will be applied to determine allowable equipment costs:

(1) Actual costs for each piece of equipment, or groups of similar serial or series equipment, need not be available in the contractor's accounting records to determine total actual equipment costs.

(2) If equipment costs have been allocated to a contract using predetermined rates , those charges will be adjusted to actual costs.

(3) Recorded job costs adjusted for unallowable expenses will be used to determine equipment operating expenses.

(4) Ownership costs (depreciation) will be determined using the contractor's depreciation schedule (subject to the provisions of FAR 31.205-11).

(5) License, taxes, storage and insurance costs are normally recovered as an indirect expense and unless the contractor charges these costs directly to contracts, they will be recovered through the indirect expense rate.

(End of Clause)

CLAUSES INCORPORATED BY FULL TEXT

52.252-6 AUTHORIZED DEVIATIONS IN CLAUSES (APR 1984)

(a) The use in this solicitation or contract of any Federal Acquisition Regulation (48 CFR Chapter 1) clause with an authorized deviation is indicated by the addition of "(DEVIATION)" after the date of the clause.

(b) The use in this solicitation or contract of any **Defense FAR Supplement** (48 CFR 2) clause with an authorized deviation is indicated by the addition of "(DEVIATION)" after the name of the regulation.

(End of clause)

CLAUSES INCORPORATED BY FULL TEXT

52.253-1 COMPUTER GENERATED FORMS (JAN 1991)

(a) Any data required to be submitted on a Standard or Optional Form prescribed by the Federal Acquisition Regulation (FAR) may be submitted on a computer generated version of the form, provided there is no change to

the name, content, or sequence of the data elements on the form, and provided the form carries the Standard or Optional Form number and edition date.

(b) Unless prohibited by agency regulations, any data required to be submitted on an agency unique form prescribed by an agency supplement to the FAR may be submitted on a computer generated version of the form provided there is no change to the name, content, or sequence of the data elements on the form and provided the form carries the agency form number and edition date.

(c) If the Contractor submits a computer generated version of a form that is different than the required form, then the rights and obligations of the parties will be determined based on the content of the required form.

(End of clause)

CLAUSES INCORPORATED BY FULL TEXT

252.201-7000 CONTRACTING OFFICER'S REPRESENTATIVE (DEC 1991)

(a) "Definition. Contracting officer's representative" means an individual designated in accordance with subsection 201.602-2 of the Defense Federal Acquisition Regulation Supplement and authorized in writing by the contracting officer to perform specific technical or administrative functions.

(b) If the Contracting Officer designates a contracting officer's representative (COR), the Contractor will receive a copy of the written designation. It will specify the extent of the COR's authority to act on behalf of the contracting officer. The COR is not authorized to make any commitments or changes that will affect price, quality, quantity, delivery, or any other term or condition of the contract.

(End of clause)

CLAUSES INCORPORATED BY FULL TEXT

252.203-7001 PROHIBITION ON PERSONS CONVICTED OF FRAUD OR OTHER DEFENSE-CONTRACT-RELATED FELONIES (DEC 2004)

(a) Definitions. As used in this clause—

(1) “Arising out of a contract with the DoD” means any act in connection with—

(i) Attempting to obtain;

(ii) Obtaining, or

(iii) Performing a contract or first-tier subcontract of any agency, department, or component of the Department of Defense (DoD).

(2) “Conviction of fraud or any other felony” means any conviction for fraud or a felony in violation of state or Federal criminal statutes, whether entered on a verdict or plea, including a plea of nolo contendere, for which sentence has been imposed.

(3) “Date of conviction” means the date judgment was entered against the individual.

(b) Any individual who is convicted after September 29, 1988, of fraud or any other felony arising out of a contract with the DoD is prohibited from serving--

(1) In a management or supervisory capacity on this contract;

(2) On the board of directors of the Contractor;

(3) As a consultant, agent, or representative for the Contractor; or

(4) In any other capacity with the authority to influence, advise, or control the decisions of the Contractor with regard to this contract.

(c) Unless waived, the prohibition in paragraph (b) of this clause applies for not less than 5 years from the date of conviction.

(d) 10 U.S.C. 2408 provides that the Contractor shall be subject to a criminal penalty of not more than $500,000 if convicted of knowingly--

(1) Employing a person under a prohibition specified in paragraph (b) of this clause; or

(2) Allowing such a person to serve on the board of directors of the contractor or first-tier subcontractor.

(e) In addition to the criminal penalties contained in 10 U.S.C. 2408, the Government may consider other available remedies, such as—

(1) Suspension or debarment;

(2) Cancellation of the contract at no cost to the Government; or

(3) Termination of the contract for default.

(f) The Contractor may submit written requests for waiver of the prohibition in paragraph (b) of this clause to the Contracting Officer. Requests shall clearly identify—

(1) The person involved;

(2) The nature of the conviction and resultant sentence or punishment imposed;

(3) The reasons for the requested waiver; and

(4) An explanation of why a waiver is in the interest of national security.

(g) The Contractor agrees to include the substance of this clause, appropriately modified to reflect the identity and relationship of the parties, in all first-tier subcontracts exceeding the simplified acquisition threshold in Part 2 of the Federal Acquisition Regulation, except those for commercial items or components.

(h) Pursuant to 10 U.S.C. 2408(c), defense contractors and subcontractors may obtain information as to whether a particular person has been convicted of fraud or any other felony arising out of a contract with the DoD by contacting The Office of Justice Programs, The Denial of Federal Benefits Office, U.S. Department of Justice, telephone (301) 809-4904.

(End of clause)

CLAUSES INCORPORATED BY FULL TEXT

252.204-7000 DISCLOSURE OF INFORMATION (DEC 1991)

(a) The Contractor shall not release to anyone outside the Contractor's organization any unclassified information, regardless of medium (e.g., film, tape, document), pertaining to any part of this contract or any program related to this contract, unless--

(1) The Contracting Officer has given prior written approval; or

(2) The information is otherwise in the public domain before the date of release.

(b) Requests for approval shall identify the specific information to be released, the medium to be used, and the purpose for the release. The Contractor shall submit its request to the Contracting Officer at least 45 days before the proposed date for release.

(c) The Contractor agrees to include a similar requirement in each subcontract under this contract. Subcontractors shall submit requests for authorization to release through the prime contractor to the Contracting Officer.

(End of clause)

CLAUSES INCORPORATED BY FULL TEXT

252.204-7003 CONTROL OF GOVERNMENT PERSONNEL WORK PRODUCT (APR 1992)

The Contractor's procedures for protecting against unauthorized disclosure of information shall not require Department of Defense employees or members of the Armed Forces to relinquish control of their work products, whether classified or not, to the contractor.

(End of clause)

CLAUSES INCORPORATED BY FULL TEXT

252.204-7004 CENTRAL CONTRACTOR REGISTRATION (52.204-7) ALTERNATE A (NOV 2003)

(a) Definitions. As used in this clause--

“Central Contractor Registration (CCR) database” means the primary Government repository for contractor information required for the conduct of business with the Government.

“Commercial and Government Entity (CAGE) code” means--

(1) A code assigned by the Defense Logistics Information Service (DLIS) to identify a commercial or Government entity; or

(2) A code assigned by a member of the North Atlantic Treaty Organization that DLIS records and maintains in the CAGE master file. This type of code is known as an “NCAGE code.”

“Data Universal Numbering System (DUNS) number” means the 9-digit number assigned by Dun and Bradstreet, Inc. (D&B) to identify unique business entities.

“Data Universal Numbering System +4 (DUNS+4) number” means the DUNS number assigned by D&B plus a 4-character suffix that may be assigned by a business concern. (D&B has no affiliation with this 4-character suffix.) This 4-character suffix may be assigned at the discretion of the business concern to establish additional CCR records for identifying alternative Electronic Funds Transfer (EFT) accounts (see Subpart 32.11 of the Federal Acquisition Regulation) for the same parent concern.

“Registered in the CCR database” means that--

(1) The Contractor has entered all mandatory information, including the DUNS number or the DUNS+4 number, into the CCR database;

(2) The Contractor's CAGE code is in the CCR database; and

(3) The Government has validated all mandatory data fields and has marked the records “Active.”

(b)(1) By submission of an offer, the offeror acknowledges the requirement that a prospective awardee shall be registered in the CCR database prior to award, during performance, and through final payment of any contract, basic agreement, basic ordering agreement, or blanket purchasing agreement resulting from this solicitation.

(2) The offeror shall enter, in the block with its name and address on the cover page of its offer, the annotation "DUNS" or "DUNS +4" followed by the DUNS or DUNS +4 number that identifies the offeror's name and address exactly as stated in the offer. The DUNS number will be used by the Contracting Officer to verify that the offeror is registered in the CCR database.

(c) If the offeror does not have a DUNS number, it should contact Dun and Bradstreet directly to obtain one.

(1) An offeror may obtain a DUNS number-

(i) If located within the United States, by calling Dun and Bradstreet at 1-866-705-5711 or via the Internet at http://www.dnb.com; or

(ii) If located outside the United States, by contacting the local Dun and Bradstreet office.

(2) The offeror should be prepared to provide the following information:

(i) Company legal business.

(ii) Tradestyle, doing business, or other name by which your entity is commonly recognized.

(iii) Company Physical Street Address, City, State, and Zip Code.

(iv) Company Mailing Address, City, State and Zip Code (if separate from physical).

(v) Company Telephone Number.

(vi) Date the company was started.

(vii) Number of employees at your location.

(viii) Chief executive officer/key manager.

(ix) Line of business (industry).

(x) Company Headquarters name and address (reporting relationship within your entity).

(d) If the Offeror does not become registered in the CCR database in the time prescribed by the Contracting Officer, the Contracting Officer will proceed to award to the next otherwise successful registered Offeror.

(e) Processing time, which normally takes 48 hours, should be taken into consideration when registering. Offerors who are not registered should consider applying for registration immediately upon receipt of this solicitation.

(f) The Contractor is responsible for the accuracy and completeness of the data within the CCR database, and for any liability resulting from the Government's reliance on inaccurate or incomplete data. To remain registered in the CCR database after the initial registration, the Contractor is required to review and update on an annual basis from the date of initial registration or subsequent updates its information in the CCR database to ensure it is current, accurate and complete. Updating information in the CCR does not alter the terms and conditions of this contract and is not a substitute for a properly executed contractual document.

(g)
(1)
(i) If a Contractor has legally changed its business name, "doing business as" name, or division name (whichever is shown on the contract), or has transferred the assets used in performing the contract, but has not completed the necessary requirements regarding novation and change-of-name agreements in Subpart 42.12, the Contractor shall provide the responsible Contracting Officer a minimum of one business day's written notification of its intention to (A) change the name in the CCR database; (B) comply with the requirements of Subpart 42.12 of the FAR; and (C) agree in writing to the timeline and procedures specified by the responsible Contracting Officer. The Contractor must provide with the notification sufficient documentation to support the legally changed name.

(ii) If the Contractor fails to comply with the requirements of paragraph (g)(1)(i) of this clause, or fails to perform the agreement at paragraph (g)(1)(i)(C) of this clause, and, in the absence of a properly executed novation or change-of-name agreement, the CCR information that shows the Contractor to be other than the Contractor indicated in the contract will be considered to be incorrect information within the meaning of the "Suspension of Payment" paragraph of the electronic funds transfer (EFT) clause of this contract.

(2) The Contractor shall not change the name or address for EFT payments or manual payments, as appropriate, in the CCR record to reflect an assignee for the purpose of assignment of claims (see FAR Subpart 32.8, Assignment of Claims). Assignees shall be separately registered in the CCR database. Information provided to the Contractor's CCR record that indicates payments, including those made by EFT, to an ultimate recipient other than that Contractor will be considered to be incorrect information within the meaning of the "Suspension of payment" paragraph of the EFT clause of this contract.

(h) Offerors and Contractors may obtain information on registration and annual confirmation requirements via the internet at http://www.ccr.gov or by calling 1-888-227-2423, or 269-961-5757.

(End of clause)

CLAUSES INCORPORATED BY FULL TEXT

252.209-7004 SUBCONTRACTING WITH FIRMS THAT ARE OWNED OR CONTROLLED BY THE GOVERNMENT OF A TERRORIST COUNTRY (MAR 1998)

(a) Unless the Government determines that there is a compelling reason to do so, the Contractor shall not enter into any subcontract in excess of $25,000 with a firm, or subsidiary of a firm, that is identified, on the List of Parties Excluded from Federal Procurement and Nonprocurement Programs, as being ineligible for the award of Defense contracts or subcontracts because it is owned or controlled by the government of a terrorist country.

(b) A corporate officer or a designee of the Contractor shall notify the Contracting Officer, in writing, before entering into a subcontract with a party that is identified, on the List of Parties Excluded from Federal Procurement and Nonprocurement Programs, as being ineligible for the award of Defense contracts or subcontracts because it is owned or controlled by the government of a terrorist country. The notice must include the name of the proposed subcontractor notwithstanding its inclusion on the List of Parties Excluded From Federal Procurement and Nonprocurement Programs.

(End of clause)

CLAUSES INCORPORATED BY FULL TEXT

252.215-7000 PRICING ADJUSTMENTS (DEC 1991)

The term "pricing adjustment," as used in paragraph (a) of the clauses entitled "Price Reduction for Defective Cost or Pricing Data - Modifications," "Subcontractor Cost or Pricing Data," and "Subcontractor Cost or Pricing Data - Modifications," means the aggregate increases and/or decreases in cost plus applicable profits.

(End of clause)

CLAUSES INCORPORATED BY FULL TEXT

252.215-7002 COST ESTIMATING SYSTEM REQUIREMENTS (OCT 1998)

(a) "Definition."

"Estimating system" means the Contractor's policies, procedures, and practices for generating estimates of costs and other data included in proposals submitted to customers in the expectation of receiving contract awards. Estimating system includes the Contractor's --

(1) Organizational structure;

(2) Established lines of authority, duties, and responsibilities;

(3) Internal controls and managerial reviews;

(4) Flow of work, coordination, and communication; and

(5) Estimating methods, techniques, accumulation of historical costs, and other analyses used to generate cost estimates.1997

(b) "General."

(1) The Contractor shall establish, maintain, and comply with an estimating system that is consistently applied and produces reliable, verifiable, supportable, and documented cost estimates that are an acceptable basis for negotiation of fair and reasonable prices.

(2) The system should be --

(i) Consistent and integrated with the Contractor's related management systems; and

(ii) Subject to applicable financial control systems.

(c) "Applicability". Paragraphs (d) and (e) of this clause apply if the Contractor is a large business and either --

(1) In its fiscal year preceding award of this contract, received Department of Defense (DoD) prime contracts or subcontracts, totaling $50 million or more for which certified cost or pricing data were required; or

(2) In its fiscal year preceding award of this contract --

(i) Received DoD prime contracts or subcontracts totaling $10 million or more (but less than $50 million) for which certified cost or pricing data were required; and

(ii) Was notified in writing by the Contracting Officer that paragraphs (d) and (e) of this clause apply.

(d) "System requirements."

(1) The Contractor shall disclose its estimating system to the Administrative Contracting Officer (ACO) in writing. If the Contractor wishes the Government to protect the information as privileged or confidential, the Contractor must mark the documents with the appropriate legends before submission.

(2) An estimating system disclosure is adequate when the Contractor has provided the ACO with documentation that--

(i) Accurately describes those policies, procedures, and practices that the Contractor currently uses in preparing cost proposals; and

(ii) Provides sufficient detail for the Government to reasonably make an informed judgment regarding the acceptability of the Contractor's estimating practices.

(3) The Contractor shall --

(i) Comply with its disclosed estimating system; and

(ii) Disclose significant changes to the cost estimating system to the ACO on a timely basis.

(e) "Estimating system deficiencies."

(1) The Contractor shall respond to a written report from the Government that identifies deficiencies in the Contractor's estimating system as follows:

(i) If the Contractor agrees with the report findings and recommendations, the Contractor shall --

(A) Within 30 days, state its agreement in writing; and

(B) Within 60 days, correct the deficiencies or submit a corrective action plan showing proposed milestones and actions leading to elimination of the deficiencies.

(ii) If the Contractor disagrees with the report, the Contractor shall, within 30 days, state its rationale for disagreeing.

(2) The ACO will evaluate the Contractor's response and notify the Contractor of the determination concerning remaining deficiencies and/or the adequacy of any proposed or completed corrective action.

(End of clause)

CLAUSES INCORPORATED BY FULL TEXT

252.222-7002 COMPLIANCE WITH LOCAL LABOR LAWS (OVERSEAS) (JUN 1997)

(a) The Contractor shall comply with all—

(1) Local laws, regulations, and labor union agreements governing work hours; and

(2) Labor regulations including collective bargaining agreements, workers' compensation, working conditions, fringe benefits, and labor standards or labor contract matters.

(b) The Contractor indemnifies and holds harmless the United States Government from all claims arising out of the requirements of this clause. This indemnity includes the Contractor's obligation to handle and settle, without cost to the United States Government, any claims or litigation concerning allegations that the Contractor or the United States Government, or both, have not fully complied with local labor laws or regulations relating to the performance of work required by this contract.

(c) Notwithstanding paragraph (b) of this clause, consistent with paragraphs 31.205-15(a) and 31.205-47(d) of the Federal Acquisition Regulation, the Contractor will be reimbursed for the costs of all fines, penalties, and reasonable litigation expenses incurred as a result of compliance with specific contract terms and conditions or written instructions from the Contracting officer.

(End of clause)

CLAUSES INCORPORATED BY FULL TEXT

252.222-7006 COMBATING TRAFFICKING IN PERSONS (OCT 2006)

(a) Definitions. As used in this clause--

Coercion means--

(1) Threats of serious harm to or physical restraint against any person;

(2) Any scheme, plan, or pattern intended to cause a person to believe that failure to perform an act would result in serious harm to or physical restraint against any person; or

(3) The abuse or threatened abuse of the legal process.

Commercial sex act means any sex act on account of which anything of value is given to or received by any person.

Construction means construction, alteration, or repair (including dredging, excavating, and painting) of buildings, structures, or other real property. For purposes of this definition, the terms ``buildings, structures, or other real property" include, but are not limited to, improvements of all types, such as bridges, dams, plants, highways, parkways, streets, subways, tunnels, sewers, mains, power lines, cemeteries, pumping stations, railways, airport facilities, terminals, docks, piers, wharves, ways, lighthouses, buoys, jetties, breakwaters, levees, canals, and channels. Construction does not include the manufacture, production, furnishing, construction, alteration, repair, processing, or assembling of vessels, aircraft, or other kinds of personal property.

Debt bondage means the status or condition of a debtor arising from a pledge by the debtor of his or her personal services or of those of a person under his or her control as a security for debt, if the value of those services as reasonably assessed is not applied toward the liquidation of the debt or the length and nature of those services are not respectively limited and defined.

Employee means an employee of a contractor directly engaged in the performance of work under a Government contract, including all direct cost employees and any other contractor employee who has other than a minimal impact or involvement in contract performance.

Individual means a contractor that has no more than one employee including the contractor.

Involuntary servitude includes a condition of servitude induced by means of--

(1) Any scheme, plan, or pattern intended to cause a person to believe that, if the person did not enter into or continue in such conditions, that person or another person would suffer serious harm or physical restraint; or

(2) The abuse or threatened abuse of the legal process (22 U.S.C. 7102(5)).

Service contract means a contract that directly engages the time and effort of a contractor whose primary purpose is to perform an identifiable task rather than to furnish an end item of supply.

Service (other than commercial) means a service that does not meet the definition of commercial item in section 2.101 of the Federal Acquisition Regulation.

Severe forms of trafficking in persons means--

(1) Sex trafficking in which a commercial sex act is induced by force, fraud, or coercion, or in which the person induced to perform such act has not attained 18 years of age; or

(2) The recruitment, harboring, transportation, provision, or obtaining of a person for labor or services, through the use of force, fraud, or coercion for the purpose of subjection to involuntary servitude, peonage, debt bondage, or slavery.

Sex trafficking means the recruitment, harboring, transportation, provision, or obtaining of a person for the purpose of a commercial sex act.

United States means the 50 States, the District of Columbia, and outlying areas.

(b) Policy. It is the policy of the Department of Defense (DoD) that trafficking in persons will not be facilitated in any way by the activities of DoD contractors or contractor personnel. DoD will not tolerate severe forms of trafficking in persons or use of forced labor by DoD contractors, DoD subcontractors, or DoD contractor or subcontractor personnel during the period of contract performance. Furthermore, DoD will not tolerate the procurement of commercial sex acts by DoD contractors, DoD subcontractors, or DoD contractor or subcontractor personnel, during the period of performance of service or construction contracts. As delineated in National Security

Presidential Directive 22, the United States has adopted a zero tolerance policy regarding contractor personnel who engage in or support trafficking in persons.

(c) Contractor compliance.

(1) During the performance of this contract, the Contractor shall comply with the policy of DoD and shall not engage in or support severe forms of trafficking in persons or use forced labor. The Contractor is responsible for knowing and adhering to United States Government zero-tolerance policy and all host nation laws and regulations relating to trafficking in persons and the use of forced labor.

(2) Additionally, if this contract is a service or construction contract, the Contractor shall not engage in or support the procurement of commercial sex acts during the performance of this contract and is responsible for knowing and adhering to United States Government policy and all host nation laws and regulations relating thereto.

(d) Contractor responsibilities for employee conduct--service or construction contracts. If this contract is a service or construction contract, the Contractor, if other than an individual, shall establish policies and procedures for ensuring that during the performance of this contract, its employees do not engage in or support severe forms of trafficking in persons, procure commercial sex acts, or use forced labor. At a minimum, the Contractor shall--

(1) Publish a statement notifying its employees of the United States Government policy described in paragraph (b) of this clause and specifying the actions that will be taken against employees for violations of this policy. Such actions may include, but are not limited to, removal from the contract, reduction in benefits, termination of employment, or removal from the host country;

(2) Establish an awareness program to inform employees regarding--

(i) The Contractor's policy of ensuring that employees do not engage in severe forms of trafficking in persons, procure commercial sex acts, or use forced labor;

(ii) The actions that will be taken against employees for violation of such policy; and

(iii) Laws, regulations, and directives that apply to conduct when performance of the contract is outside the United States, including--

(A) All host country Government laws and regulations relating to severe forms of trafficking in persons, procurement of commercial sex acts, and use of forced labor;

(B) All United States laws and regulations on severe forms of trafficking in persons, procurement of commercial sex acts, and use of forced labor that may apply to its employees' conduct in the host nation, including those laws for which jurisdiction is established by the Military Extraterritorial Jurisdiction Act of 2000 (18 U.S.C. 3261-3267) and 18 U.S.C. 3271, Trafficking in persons offenses committed by persons employed by or accompanying the Federal Government outside the United States; and

(C) Directives on trafficking in persons from the Combatant Commander, or the Combatant Commander's designated representative, that apply to contractor employees, such as general orders and military listings of ``off-limits'' local establishments; and

(3) Provide all employees directly engaged in performance of the contract with--

(i) Any necessary legal guidance and interpretations regarding combating trafficking in persons policies, laws, regulations, and directives applicable to performance in the host country; and

(ii) A copy of the statement required by paragraph (d)(1) of this clause. If this contract is for services (other than commercial), the Contractor shall obtain written agreement from the employee that the employee shall abide by the terms of the statement.

(e) Employee violations--notification and action. The Contractor shall--

(1) Inform the Contracting Officer immediately of any information it receives from any source (including host country law enforcement) that alleges a contractor or subcontractor employee has engaged in conduct that violates the policy in paragraph (b) of this clause. Notification to the Contracting Officer does not alleviate the Contractor's responsibility to comply with applicable host nation laws;

(2) In accordance with its own operating procedures and applicable policies, laws, regulations, and directives, take appropriate action, up to and including removal from the host nation or dismissal, against any of its employees who violate the policy in paragraph (b) of this clause; and

(3) Inform the Contracting Officer of any actions taken against employees pursuant to this clause.

(f) Remedies. In addition to other remedies available to the Government, the Contractor's failure to comply with the requirements of paragraphs (c), (d), (e), or (g) of this clause may render the Contractor subject to--

(1) Required removal of a Contractor employee or employees from the performance of the contract;

(2) Required subcontractor termination;

(3) Suspension of contract payments;

(4) Loss of award fee, consistent with the award fee plan, for the performance period in which the Government determined Contractor non-compliance;

(5) Termination of the contract for default, in accordance with the Termination clause of this contract; or

(6) Suspension or debarment.

(g) Subcontracts.

(1)(i) The Contractor shall include the substance of this clause, including this paragraph (g), in all subcontracts performed outside the United States; and

(ii) If this contract is for services (other than commercial), the Contractor shall include the substance of this clause, including this paragraph (g), in all subcontracts performed in the United States for the acquisition of services (other than commercial).

(2) If this contract is a service or construction contract, the Contractor shall conduct periodic reviews of its service and construction subcontractors to verify compliance with their obligations pursuant to paragraph (d) of this clause.

(3) The Contractor shall--

(i) Immediately inform the Contracting Officer of any information it receives from any source (including host country law enforcement) that alleges a subcontractor has engaged in conduct that violates the policy in paragraph (b) of this clause. Notification to the Contracting Officer does not alleviate the Contractor's responsibility to comply with applicable host nation laws;

(ii) Take appropriate action, including termination of the subcontract, when the Contractor obtains sufficient evidence to determine that the subcontractor is in non-compliance with its contractual obligations pursuant to this clause; and

(iii) Inform the Contracting Officer of any actions taken against subcontractors pursuant to this clause.

(End of Clause)

CLAUSES INCORPORATED BY FULL TEXT

252.223-7004 DRUG-FREE WORK FORCE (SEP 1988)

(a) Definitions.

(1) "Employee in a sensitive position," as used in this clause, means an employee who has been granted access to classified information; or employees in other positions that the Contractor determines involve national security; health or safety, or functions other than the foregoing requiring a high degree of trust and confidence.

(2) "Illegal drugs," as used in this clause, means controlled substances included in Schedules I and II, as defined by section 802(6) of title 21 of the United States Code, the possession of which is unlawful under chapter 13 of that Title. The term "illegal drugs" does not mean the use of a controlled substance pursuant to a valid prescription or other uses authorized by law.

(b) The Contractor agrees to institute and maintain a program for achieving the objective of a drug-free work force. While this clause defines criteria for such a program, contractors are encouraged to implement alternative approaches comparable to the criteria in paragraph (c) that are designed to achieve the objectives of this clause.

(c) Contractor programs shall include the following, or appropriate alternatives:

(1) Employee assistance programs emphasizing high level direction, education, counseling, rehabilitation, and coordination with available community resources;

(2) Supervisory training to assist in identifying and addressing illegal drug use by Contractor employees;

(3) Provision for self-referrals as well as supervisory referrals to treatment with maximum respect for individual confidentiality consistent with safety and security issues;

(4) Provision for identifying illegal drug users, including testing on a controlled and carefully monitored basis. Employee drug testing programs shall be established taking account of the following:

(i) The Contractor shall establish a program that provides for testing for the use of illegal drugs by employees in sensitive positions. The extent of and criteria for such testing shall be determined by the Contractor based on considerations that include the nature of the work being performed under the contract, the employee's duties, and efficient use of Contractor resources, and the risks to health, safety, or national security that could result from the failure of an employee adequately to discharge his or her position.

(ii) In addition, the Contractor may establish a program for employee drug testing--

(A) When there is a reasonable suspicion that an employee uses illegal drugs; or

(B) When an employees has been involved in an accident or unsafe practice;

(C) As part of or as a follow-up to counseling or rehabilitation for illegal drug use;

(D) As part of a voluntary employee drug testing program.

(iii) The Contractor may establish a program to test applicants for employment for illegal drug use.

(iv) For the purpose of administering this clause, testing for illegal drugs may be limited to those substances for which testing is prescribed by section 2..1 of subpart B of the "Mandatory Guidelines for Federal Workplace Drug Testing Programs" (53 FR 11980 (April 11, 1988), issued by the Department of Health and Human Services.

(d) Contractors shall adopt appropriate personnel procedures to deal with employees who are found to be using drugs illegally. Contractors shall not allow any employee to remain on duty or perform in a sensitive position who is found to use illegal drugs until such times as the Contractor, in accordance with procedures established by the Contractor, determines that the employee may perform in such a position.

(e) The provisions of this clause pertaining to drug testing program shall not apply to the extent that are inconsistent with state or local law, or with an existing collective bargaining agreement; provided that with respect to the latter, the Contractor agrees those issues that are in conflict will be a subject of negotiation at the next collective bargaining session.

(End of clause)

252.225-7005 IDENTIFICATION OF EXPENDITURES IN THE UNITED STATES (JUN 2005)

(a) Definition. United States, as used in this clause, means the 50 States, the District of Columbia, and outlying areas.

(b) This clause applies only if the Contractor is--

(1) A concern incorporated in the United States (including a subsidiary that is incorporated in the United States, even if the parent corporation is not incorporated in the United States); or

(2) An unincorporated concern having its principal place of business in the United States.

(c) On each invoice, voucher, or other request for payment under this contract, the Contractor shall identify that part of the requested payment that represents estimated expenditures in the United States. The identification--

(1) May be expressed either as dollar amounts or as percentages of the total amount of the request for payment;

(2) Should be based on reasonable estimates; and

(3) Shall state the full amount of the payment requested, subdivided into the following categories:

(i) U.S. products--expenditures for material and equipment manufactured or produced in the United States, including end products, components, or construction material, but excluding transportation;

(ii) U.S. services--expenditures for services performed in the United States, including all charges for overhead, other indirect costs, and profit under construction or service contracts;

(iii) Transportation on U.S. carriers--expenditures for transportation furnished by U.S. flag, ocean, surface, and air carriers; and

(iv) Expenditures not identified under paragraphs (c)(3)(i) through (iii) of this clause.

(d) Nothing in this clause requires the establishment or maintenance of detailed accounting records or gives the U.S. Government any right to audit the Contractor's books or records.

(End of clause)

252.225-7041 CORRESPONDENCE IN ENGLISH (JUNE 1997)

The Contractor shall ensure that all contract correspondence that is addressed to the United States Government is submitted in English or with an English translation.

(End of clause)

252.225-7043 ANTITERRORISM/FORCE PROTECTION POLICY FOR DEFENSE CONTRACTORS OUTSIDE THE UNITED STATES (MAR 2006)

(a) Definition. United States, as used in this clause, means, the 50 States, the District of Columbia, and outlying areas.

(b) Except as provided in paragraph (c) of this clause, the Contractor and its subcontractors, if performing or traveling outside the United States under this contract, shall--

(1) Affiliate with the Overseas Security Advisory Council, if the Contractor or subcontractor is a U.S. entity;

(2) Ensure that Contractor and subcontractor personnel who are U.S. nationals and are in-country on a non-transitory basis, register with the U.S. Embassy, and that Contractor and subcontractor personnel who are third country nationals comply with any security related requirements of the Embassy of their nationality;

(3) Provide, to Contractor and subcontractor personnel, antiterrorism/force protection awareness information commensurate with that which the Department of Defense (DoD) provides to its military and civilian personnel and their families, to the extent such information can be made available prior to travel outside the United States; and

(4) Obtain and comply with the most current antiterrorism/force protection guidance for Contractor and subcontractor personnel.

(c) The requirements of this clause do not apply to any subcontractor that is--

(1) A foreign government;

(2) A representative of a foreign government; or

(3) A foreign corporation wholly owned by a foreign government.

(d) Information and guidance pertaining to DoD antiterrorism/force protection can be obtained from **Combined Forces Command, Afghanistan, (CFC-A), Base Defense Operations Center (BDOC) Camp Eggers, Kabul, Afghanistan.**

(End of clause)

252.227-7013 RIGHTS IN TECHNICAL DATA--NONCOMMERCIAL ITEMS. (NOV 1995)

(a) Definitions. As used in this clause:

(1) Computer data base means a collection of data recorded in a form capable of being processed by a computer. The term does not include computer software.

(2) Computer program means a set of instructions, rules, or routines recorded in a form that is capable of causing a computer to perform a specific operation or series of operations.

(3) Computer software means computer programs, source code, source code listings, object code listings, design details, algorithms, processes, flow charts, formulae and related material that would enable the software to be reproduced, recreated, or recompiled. Computer software does not include computer data bases or computer software documentation.

(4) Computer software documentation means owner's manuals, user's manuals, installation instructions, operating instructions, and other similar items, regardless of storage medium, that explain the capabilities of the computer software or provide instructions for using the software.

(5) Detailed manufacturing or process data means technical data that describe the steps, sequences, and conditions of manufacturing, processing or assembly used by the manufacturer to produce an item or component or to perform a process.

(6) Developed means that an item, component, or process exists and is workable. Thus, the item or component must have been constructed or the process practiced. Workability is generally established when the item, component, or process has been analyzed or tested sufficiently to demonstrate to reasonable people skilled in the applicable art that there is a high probability that it will operate as intended. Whether, how much, and what type of analysis or testing is required to establish workability depends on the nature of the item, component, or process, and the state of the art. To be considered "developed," the item, component, or process need not be at the stage where it could be offered for sale or sold on the commercial market, nor must the item, component, or process be actually reduced to practice within the meaning of Title 35 of the United States Code.

(7) Developed exclusively at private expense means development was accomplished entirely with costs charged to indirect cost pools, costs not allocated to a government contract, or any combination thereof.

(i) Private expense determinations should be made at the lowest practicable level.

(ii) Under fixed-price contracts, when total costs are greater than the firm-fixed-price or ceiling price of the contract, the additional development costs necessary to complete development shall not be considered when determining whether development was at government, private, or mixed expense.

(8) Developed exclusively with government funds means development was not accomplished exclusively or partially at private expense.

(9) Developed with mixed funding means development was accomplished partially with costs charged to indirect cost pools and/or costs not allocated to a government contract, and partially with costs charged directly to a government contract.

(10) Form, fit, and function data means technical data that describes the required overall physical, functional, and performance characteristics (along with the qualification requirements, if applicable) of an item, component, or process to the extent necessary to permit identification of physically and functionally interchangeable items.

(11) Government purpose means any activity in which the United States Government is a party, including cooperative agreements with international or multi-national defense organizations, or sales or transfers by the United States Government to foreign governments or international organizations. Government purposes include competitive procurement, but do not include the rights to use, modify, reproduce, release, perform, display, or disclose technical data for commercial purposes or authorize others to do so.

(12) Government purpose rights means the rights to--

(i) Use, modify, reproduce, release, perform, display, or disclose technical data within the Government without restriction; and

(ii) Release or disclose technical data outside the Government and authorize persons to whom release or disclosure has been made to use, modify, reproduce, release, perform, display, or disclose that data for United States government purposes.

(13) Limited rights means the rights to use, modify, reproduce, release, perform, display, or disclose technical data, in whole or in part, within the Government. The Government may not, without the written permission of the party asserting limited rights, release or disclose the technical data outside the Government, use the technical data for manufacture, or authorize the technical data to be used by another party, except that the Government may reproduce, release or disclose such data or authorize the use or reproduction of the data by persons outside the Government if reproduction, release, disclosure, or use is--

(i) Necessary for emergency repair and overhaul; or

(ii) A release or disclosure of technical data (other than detailed manufacturing or process data) to, or use of such data by, a foreign government that is in the interest of the Government and is required for evaluational or informational purposes;

(iii) Subject to a prohibition on the further reproduction, release, disclosure, or use of the technical data; and

(iv) The contractor or subcontractor asserting the restriction is notified of such reproduction, release, disclosure, or use.

(14) Technical data means recorded information, regardless of the form or method of the recording, of a scientific or technical nature (including computer software documentation). The term does not include computer software or data incidental to contract administration, such as financial and/or management information.

(15) Unlimited rights means rights to use, modify, reproduce, perform, display, release, or disclose technical data in whole or in part, in any manner, and for any purpose whatsoever, and to have or authorize others to do so.

(b) Rights in technical data. The Contractor grants or shall obtain for the Government the following royalty free, world-wide, nonexclusive, irrevocable license rights in technical data other than computer software documentation (see the Rights in Noncommercial Computer Software and Noncommercial Computer Software Documentation clause of this contract for rights in computer software documentation):

(1) Unlimited rights.

The Government shall have unlimited rights in technical data that are--

(i) Data pertaining to an item, component, or process which has been or will be developed exclusively with Government funds;

(ii) Studies, analyses, test data, or similar data produced for this contract, when the study, analysis, test, or similar work was specified as an element of performance;

(iii) Created exclusively with Government funds in the performance of a contract that does not require the development, manufacture, construction, or production of items, components, or processes;

(iv) Form, fit, and function data;

(v) Necessary for installation, operation, maintenance, or training purposes (other than detailed manufacturing or process data);

(vi) Corrections or changes to technical data furnished to the Contractor by the Government;

(vii) Otherwise publicly available or have been released or disclosed by the Contractor or subcontractor without restrictions on further use, release or disclosure, other than a release or disclosure resulting from the sale, transfer, or other assignment of interest in the technical data to another party or the sale or transfer of some or all of a business entity or its assets to another party;

(viii) Data in which the Government has obtained unlimited rights under another Government contract or as a result of negotiations; or

(ix) Data furnished to the Government, under this or any other Government contract or subcontract thereunder, with--

(A) Government purpose license rights or limited rights and the restrictive condition(s) has/have expired; or

(B) Government purpose rights and the Contractor's exclusive right to use such data for commercial purposes has expired.

(2) Government purpose rights.

(i) The Government shall have government purpose rights for a five-year period, or such other period as may be negotiated, in technical data--

(A) That pertain to items, components, or processes developed with mixed funding except when the Government is entitled to unlimited rights in such data as provided in paragraphs (b)(ii) and (b)(iv) through (b)(ix) of this clause; or

(B) Created with mixed funding in the performance of a contract that does not require the development, manufacture, construction, or production of items, components, or processes.

(ii) The five-year period, or such other period as may have been negotiated, shall commence upon execution of the contract, subcontract, letter contract (or similar contractual instrument), contract modification, or option exercise that required development of the items, components, or processes or creation of the data described in paragraph (b)(2)(i)(B) of this clause. Upon expiration of the five-year or other negotiated period, the Government shall have unlimited rights in the technical data.

(iii) The Government shall not release or disclose technical data in which it has government purpose rights unless-

(A) Prior to release or disclosure, the intended recipient is subject to the non-disclosure agreement at 227.7103-7 of the Defense Federal Acquisition Regulation Supplement (DFARS); or

(B) The recipient is a Government contractor receiving access to the data for performance of a Government contract that contains the clause at DFARS 252.227-7025, Limitations on the Use or Disclosure of Government-Furnished Information Marked with Restrictive Legends.

(iv) The Contractor has the exclusive right, including the right to license others, to use technical data in which the Government has obtained government purpose rights under this contract for any commercial purpose during the time period specified in the government purpose rights legend prescribed in paragraph (f)(2) of this clause.

(3) Limited rights.

(i) Except as provided in paragraphs (b)(1)(ii) and (b)(1)(iv) through (b)(1)(ix) of this clause, the Government shall have limited rights in technical data--

(A) Pertaining to items, components, or processes developed exclusively at private expense and marked with the limited rights legend prescribed in paragraph (f) of this clause; or

(B) Created exclusively at private expense in the performance of a contract that does not require the development, manufacture, construction, or production of items, components, or processes.

(ii) The Government shall require a recipient of limited rights data for emergency repair or overhaul to destroy the data and all copies in its possession promptly following completion of the emergency repair/overhaul and to notify the Contractor that the data have been destroyed.

(iii) The Contractor, its subcontractors, and suppliers are not required to provide the Government additional rights to use, modify, reproduce, release, perform, display, or disclose technical data furnished to the Government with limited rights. However, if the Government desires to obtain additional rights in technical data in which it has limited rights, the Contractor agrees to promptly enter into negotiations with the Contracting Officer to determine whether there are acceptable terms for transferring such rights. All technical data in which the Contractor has granted the Government additional rights shall be listed or described in a license agreement made part of the contract. The license shall enumerate the additional rights granted the Government in such data.

(4) Specifically negotiated license rights.

The standard license rights granted to the Government under paragraphs (b)(1) through (b)(3) of this clause, including the period during which the Government shall have government purpose rights in technical data, may be modified by mutual agreement to provide such rights as the parties consider appropriate but shall not provide the Government lesser rights than are enumerated in paragraph (a)(13) of this clause. Any rights so negotiated shall be identified in a license agreement made part of this contract.

(5) Prior government rights.

Technical data that will be delivered, furnished, or otherwise provided to the Government under this contract, in which the Government has previously obtained rights shall be delivered, furnished, or provided with the pre-existing rights, unless--

(i) The parties have agreed otherwise; or

(ii) Any restrictions on the Government's rights to use, modify, reproduce, release, perform, display, or disclose the data have expired or no longer apply.

(6) Release from liability.

The Contractor agrees to release the Government from liability for any release or disclosure of technical data made in accordance with paragraph (a)(13) or (b)(2)(iii) of this clause, in accordance with the terms of a license

negotiated under paragraph (b)(4) of this clause, or by others to whom the recipient has released or disclosed the data and to seek relief solely from the party who has improperly used, modified, reproduced, released, performed, displayed, or disclosed Contractor data marked with restrictive legends.

(c) Contractor rights in technical data. All rights not granted to the Government are retained by the Contractor.

(d) Third party copyrighted data. The Contractor shall not, without the written approval of the Contracting Officer, incorporate any copyrighted data in the technical data to be delivered under this contract unless the Contractor is the copyright owner or has obtained for the Government the license rights necessary to perfect a license or licenses in the deliverable data of the appropriate scope set forth in paragraph (b) of this clause, and has affixed a statement of the license or licenses obtained on behalf of the Government and other persons to the data transmittal document.

(e) Identification and delivery of data to be furnished with restrictions on use, release, or disclosure. (1) This paragraph does not apply to restrictions based solely on copyright.

(2) Except as provided in paragraph (e)(3) of this clause, technical data that the Contractor asserts should be furnished to the Government with restrictions on use, release, or disclosure are identified in an attachment to this contract (the Attachment). The Contractor shall not deliver any data with restrictive markings unless the data are listed on the Attachment.

(3) In addition to the assertions made in the Attachment, other assertions may be identified after award when based on new information or inadvertent omissions unless the inadvertent omissions would have materially affected the source selection decision. Such identification and assertion shall be submitted to the Contracting Officer as soon as practicable prior to the scheduled date for delivery of the data, in the following format, and signed by an official authorized to contractually obligate the Contractor: Identification and Assertion of Restrictions on the Government's Use, Release, or Disclosure of Technical Data.

The Contractor asserts for itself, or the persons identified below, that the Government's rights to use, release, or disclose the following technical data should be restricted--

| Technical data to be Furnished With Restrictions \1/ | Basis for Assertion \2/ | Asserted Rights Category \3/ | Name of Person Asserting Restrictions \4/ |
|---|---|---|---|
| (LIST) | (LIST) | (LIST) | (LIST) |

\1/ If the assertion is applicable to items, components or processes developed at private expense, identify both the data and each such items, component, or process.

\2/ Generally, the development of an item, component, or process at private expense, either exclusively or partially, is the only basis for asserting restrictions on the Government's rights to use, release, or disclose technical data pertaining to such items, components, or processes. Indicate whether development was exclusively or partially at private expense. If development was not at private expense, enter the specific reason for asserting that the Government's rights should be restricted.

\3/ Enter asserted rights category (e.g., government purpose license rights from a prior contract, rights in SBIR data generated under another contract, limited or government purpose rights under this or a prior contract, or specifically negotiated licenses).

\4/ Corporation, individual, or other person, as appropriate.
Date _____

Printed Name and Title _____

_____

Signature _____

(End of identification and assertion)

(4) When requested by the Contracting Officer, the Contractor shall provide sufficient information to enable the Contracting Officer to evaluate the Contractor's assertions. The Contracting Officer reserves the right to add the Contractor's assertions to the Attachment and validate any listed assertion, at a later date, in accordance with the procedures of the Validation of Restrictive Markings on Technical Data clause of this contract.

(f) Marking requirements. The Contractor, and its subcontractors or suppliers, may only assert restrictions on the Government's rights to use, modify, reproduce, release, perform, display, or disclose technical data to be delivered under this contract by marking the deliverable data subject to restriction. Except as provided in paragraph (f)(5) of this clause, only the following legends are authorized under this contract: the government purpose rights legend at paragraph (f)(2) of this clause; the limited rights legend at paragraph (f)(3) of this clause; or the special license rights legend at paragraph (f)(4) of this clause; and/or a notice of copyright as prescribed under 17 U.S.C. 401 or 402.

(1) General marking instructions. The Contractor, or its subcontractors or suppliers, shall conspicuously and legibly mark the appropriate legend on all technical data that qualify for such markings. The authorized legends shall be placed on the transmittal document or storage container and, for printed material, each page of the printed material containing technical data for which restrictions are asserted. When only portions of a page of printed material are subject to the asserted restrictions, such portions shall be identified by circling, underscoring, with a note, or other appropriate identifier. Technical data transmitted directly from one computer or computer terminal to another shall contain a notice of asserted restrictions. Reproductions of technical data or any portions thereof subject to asserted restrictions shall also reproduce the asserted restrictions.

(2) Government purpose rights markings. Data delivered or otherwise furnished to the Government purpose rights shall be marked as follows:

Government Purpose Rights

Contract No. _____

Contractor Name _____

Contractor Address _____

_____

Expiration Date _____

The Government's rights to use, modify, reproduce, release, perform, display, or disclose these technical data are restricted by paragraph (b)(2) of the Rights in Technical Data--Noncommercial Items clause contained in the above identified contract. No restrictions apply after the expiration date shown above. Any reproduction of technical data or portions thereof marked with this legend must also reproduce the markings.

(End of legend)

(3) Limited rights markings. Data delivered or otherwise furnished to the Government with limited rights shall be marked with the following legend:

Limited Rights

Contract No. _____

Contractor Name _____

Contractor Address _____

_____

The Government's rights to use, modify, reproduce, release, perform, display, or disclose these technical data are restricted by paragraph (b)(3) of the Rights in Technical Data--Noncommercial Items clause contained in the above identified contract. Any reproduction of technical data or portions thereof marked with this legend must also reproduce the markings. Any person, other than the Government, who has been provided access to such data must promptly notify the above named Contractor.

(End of legend)

(4) Special license rights markings. (i) Data in which the Government's rights stem from a specifically negotiated license shall be marked with the following legend:

Special License Rights

The Government's rights to use, modify, reproduce, release, perform, display, or disclose these data are restricted by Contract No. _____ (Insert contract number) _____, License No. _____ (Insert license identifier) _____. Any reproduction of technical data or portions thereof marked with this legend must also reproduce the markings.

(End of legend)

(ii) For purposes of this clause, special licenses do not include government purpose license rights acquired under a prior contract (see paragraph (b)(5) of this clause).

(5) Pre-existing data markings. If the terms of a prior contract or license permitted the Contractor to restrict the Government's rights to use, modify, reproduce, release, perform, display, or disclose technical data deliverable under this contract, and those restrictions are still applicable, the Contractor may mark such data with the appropriate restrictive legend for which the data qualified under the prior contract or license. The marking procedures in paragraph (f)(1) of this clause shall be followed.

(g) Contractor procedures and records. Throughout performance of this contract, the Contractor and its subcontractors or suppliers that will deliver technical data with other than unlimited rights, shall--

(1) Have, maintain, and follow written procedures sufficient to assure that restrictive markings are used only when authorized by the terms of this clause; and

(2) Maintain records sufficient to justify the validity of any restrictive markings on technical data delivered under this contract.

(h) Removal of unjustified and nonconforming markings. (1) Unjustified technical data markings. The rights and obligations of the parties regarding the validation of restrictive markings on technical data furnished or to be furnished under this contract are contained in the Validation of Restrictive Markings on Technical Data clause of this contract. Notwithstanding any provision of this contract concerning inspection and acceptance, the Government may ignore or, at the Contractor's expense, correct or strike a marking if, in accordance with the procedures in the

Validation of Restrictive Markings on Technical Data clause of this contract, a restrictive marking is determined to be unjustified.

(2) Nonconforming technical data markings. A nonconforming marking is a marking placed on technical data delivered or otherwise furnished to the Government under this contract that is not in the format authorized by this contract. Correction of nonconforming markings is not subject to the validation of Restrictive Markings on Technical Data clause of this contract. If the Contracting Officer notifies the Contractor of a nonconforming marking and the Contractor fails to remove or correct such marking within sixty (60) days, the Government may ignore or, at the Contractor's expense, remove or correct any nonconforming marking.

(i) Relation to patents. Nothing contained in this clause shall imply a license to the Government under any patent or be construed as affecting the scope of any license or other right otherwise granted to the Government under any patent.

(j) Limitation on charges for rights in technical data. (1) The Contractor shall not charge to this contract any cost, including, but not limited to, license fees, royalties, or similar charges, for rights in technical data to be delivered under this contract when--

(i) The Government has acquired, by any means, the same or greater rights in the data; or

(ii) The data are available to the public without restrictions.

(2) The limitation in paragraph (j)(1) of this clause--

(i) Includes costs charged by a subcontractor or supplier, at any tier, or costs incurred by the Contractor to acquire rights in subcontractor or supplier technical data, if the subcontractor or supplier has been paid for such rights under any other Government contract or under a license conveying the rights to the Government; and

(ii) Does not include the reasonable costs of reproducing, handling, or mailing the documents or other media in which the technical data will be delivered.

(k) Applicability to subcontractors or suppliers. (1) The Contractor shall ensure that the rights afforded its subcontractors and suppliers under 10 U.S.C. 2320, 10 U.S.C. 2321, and the identification, assertion, and delivery processes of paragraph (e) of this clause are recognized and protected.

(2) Whenever any technical data for noncommercial items is to be obtained from a subcontractor or supplier for delivery to the Government under this contract, the Contractor shall use this same clause in the subcontract or other contractual instrument, and require its subcontractors or suppliers to do so, without alteration, except to identify the parties. No other clause shall be used to enlarge or diminish the Government's, the Contractor's, or a higher-tier subcontractor's or supplier's rights in a subcontractor's or supplier's technical data.

(3) Technical data required to be delivered by a subcontractor or supplier shall normally be delivered to the next higher-tier contractor, subcontractor, or supplier. However, when there is a requirement in the prime contract for data which may be submitted with other than unlimited rights by a subcontractor or supplier, then said subcontractor or supplier may fulfill its requirement by submitting such data directly to the Government, rather than through a higher-tier contractor, subcontractor, or supplier.

(4) The Contractor and higher-tier subcontractors or suppliers shall not use their power to award contracts as economic leverage to obtain rights in technical data from their subcontractors or suppliers. (5) In no event shall the Contractor use its obligation to recognize and protect subcontractor or supplier rights in technical data as an excuse for failing to satisfy its contractual obligations to the Government.

(End of clause)

252.227-7022 GOVERNMENT RIGHTS (UNLIMITED) (MAR 1979)

The Government shall have unlimited rights, in all drawings, designs, specifications, notes and other works developed in the performance of this contract, including the right to use same on any other Government design or construction without additional compensation to the Contractor. The Contractor hereby grants to the Government a paid-up license throughout the world to all such works to which he may assert or establish any claim under design patent or copyright laws. The Contractor for a period of three (3) years after completion of the project agrees to furnish the original or copies of all such works on the request of the Contracting Officer.

(End of clause)

252.227-7023 DRAWINGS AND OTHER DATA TO BECOME PROPERTY OF GOVERNMENT. (MAR 1979)

All designs, drawings, specifications, notes and other works developed in the performance of this contract shall become the sole property of the Government and may be used on any other design or construction without additional compensation to the Contractor. The Government shall be considered the "person for whom the work was prepared" for the purpose of authorship in any copyrightable work under 17 U.S.C. 201(b). With respect thereto, the Contractor agrees not to assert or authorize others to assert any rights nor establish any claim under the design patent or copyright laws. The Contractor for a period of three (3) years after completion of the project agrees to furnish all retained works on the request of the Contracting Officer. Unless otherwise provided in this contract, the Contractor shall have the right to retain copies of all works beyond such period.

(End of clause)

252.227-7030 TECHNICAL DATA--WITHHOLDING OF PAYMENT (MAR 2000)

(a) If technical data specified to be delivered under this contract, is not delivered within the time specified by this contract or is deficient upon delivery (including having restrictive markings not identified in the list described in the clause at 252.227-7013(e)(2) or 252.227-7018(e)(2) of this contract), the Contracting Officer may until such data is accepted by the Government, withhold payment to the Contractor of ten percent (10%) of the total contract price or amount unless a lesser withholding is specified in the contract. Payments shall not be withheld nor any other action taken pursuant to this paragraph when the Contractor's failure to make timely delivery or to deliver such data without deficiencies arises out of causes beyond the control and without the fault or negligence of the Contractor.

(b) The withholding of any amount or subsequent payment to the Contractor shall not be construed as a waiver of any rights accruing to the Government under this contract.

(End of clause)

252.227-7033 RIGHTS IN SHOP DRAWINGS (APR 1966)

(a) Shop drawings for construction means drawings, submitted to the Government by the Construction Contractor, subcontractor or any lower-tier subcontractor pursuant to a construction contract, showing in detail (i) the proposed

fabrication and assembly of structural elements and (ii) the installation (i.e., form, fit, and attachment details) of materials or equipment. The Government may duplicate, use, and disclose in any manner and for any purpose shop drawings delivered under this contract.

(b) This clause, including this paragraph (b), shall be included in all subcontracts hereunder at any tier.

252.229-7000 INVOICES EXCLUSIVE OF TAXES OR DUTIES (JUNE 1997)

Invoices submitted in accordance with the terms and conditions of this contract shall be exclusive of all taxes or duties for which relief is available.

(End of clause)

252.229-7001 TAX RELIEF (JUN 1997)

(a) Prices set forth in this contract are exclusive of all taxes and duties from which the United States Government is exempt by virtue of tax agreements between the United States Government and the Contractor's government. The following taxes or duties have been excluded from the contract price:

> Reference the exchange of diplomatic notes between the USA and Afghanistan dated September 26, 2002, December 12, 2002 and May 28, 2003; and/or successor notes or agreements as applicable."

(b) The Contractor's invoice shall list separately the gross price, amount of tax deducted, and net price charged.

(c) When items manufactured to United States Government specifications are being acquired, the Contractor shall identify the materials or components intended to be imported in order to ensure that relief from import duties is obtained. If the Contractor intends to use imported products from inventories on hand, the price of which includes a factor for import duties, the Contractor shall ensure the United States Government's exemption from these taxes. The Contractor may obtain a refund of the import duties from its government or request the duty-free import of an amount of supplies or components corresponding to that used from inventory for this contract.

(End of clause)

252.231-7000 SUPPLEMENTAL COST PRINCIPLES (DEC 1991)

When the allowability of costs under this contract is determined in accordance with part 31 of the Federal Acquisition Regulation (FAR), allowability shall also be determined in accordance with part 231 of the Defense FAR Supplement, in effect on the date of this contract.

(End of clause)

252.232-7003 ELECTRONIC SUBMISSION OF PAYMENT REQUESTS (MAY 2006)

(a) Definitions. As used in this clause--

(1) Contract financing payment and invoice payment have the meanings given in section 32.001 of the Federal Acquisition Regulation.

(2) Electronic form means any automated system that transmits information electronically from the initiating system to all affected systems. Facsimile, e-mail, and scanned documents are not acceptable electronic forms for submission of payment requests. However, scanned documents are acceptable when they are part of a submission of a payment request made using one of the electronic forms provided for in paragraph (b) of this clause.

(3) Payment request means any request for contract financing payment or invoice payment submitted by the Contractor under this contract.

(b) Except as provided in paragraph (c) of this clause, the Contractor shall submit payment requests using one of the following electronic forms:

(1) Wide Area WorkFlow-Receipt and Acceptance (WAWF-RA). Information regarding WAWF-RA is available on the Internet at https://wawf.eb.mil.

(2) Web Invoicing System (WInS). Information regarding WInS is available on the Internet at https://ecweb.dfas.mil.

(3) American National Standards Institute (ANSI) X.12 electronic data interchange (EDI) formats.

(i) Information regarding EDI formats is available on the Internet at http://www.X12.org.

(ii) EDI implementation guides are available on the Internet at http://www.dod.mil/dfas/.

(4) Another electronic form authorized by the Contracting Officer.

(c) If the Contractor is unable to submit a payment request in electronic form, or DoD is unable to receive a payment request in electronic form, the Contractor shall submit the payment request using a method mutually agreed to by the Contractor, the Contracting Officer, the contract administration office, and the payment office.

(d) In addition to the requirements of this clause, the Contractor shall meet the requirements of the appropriate payment clauses in this contract when submitting payments requests.

(End of clause)

252.232-7008 ASSIGNMENT OF CLAIMS (OVERSEAS) (JUNE 1997)

(a) No claims for monies due, or to become due, shall be assigned by the Contractor unless—

(1) Approved in writing by the Contracting Officer;

(2) Made in accordance with the laws and regulations of the United States of America; and

(3) Permitted by the laws and regulations of the Contractor's country.

(b) In no event shall copies of this contract of any plans, specifications, or other similar documents relating to work under this contract, if marked “Top Secret,” “Secret,” or “Confidential” be furnished to any assignee of any claim arising under this contract or to any other person not entitled to receive such documents. However, a copy of any part or all of this contract so marked may be furnished, or any information contained herein may be disclosed, to such assignee upon the Contracting Officer's prior written authorization.

(c) Any assignment under this contract shall cover all amounts payable under this contract and not already paid, and shall not be made to more than one party, except that any such assignment may be made to one party as agent or trustee for two or more parties participating in such financing. On each invoice or voucher submitted for payment under this contract to which any assignment applies, and for which direct payment thereof is to be made to an assignee, the Contractor shall—

(1) Identify the assignee by name and complete address; and

(2) Acknowledge the validity of the assignment and the right of the named assignee to receive payment in the amount invoiced or vouchered.

(End of clause)

252.232-7010 LEVIES ON CONTRACT PAYMENTS (SEP 2005)

(a) 26 U.S.C. 6331(h) authorizes the Internal Revenue Service (IRS) to continuously levy up to 100 percent of contract payments, up to the amount of tax debt.

(b) When a levy is imposed on a payment under this contract and the levy will jeopardize contract performance, the Contractor shall promptly notify the Procuring Contracting Officer and provide--

(1) The total dollar amount of the levy;

(2) A statement that the levy will jeopardize contract performance, including rationale and adequate supporting documentation; and

(3) Advice as to whether the inability to perform may adversely affect national security, including rationale and adequate supporting documentation.

(c) DoD shall promptly review the Contractor's assessment and provide a notification to the Contractor including--

(1) A statement as to whether DoD agrees that the levy jeopardizes contract performance; and

(2) If the levy jeopardizes contract performance and the lack of performance will adversely affect national security, the total amount of the monies collected that should be returned to the Contractor; or

(3) If the levy jeopardizes contract performance but will not impact national security, a recommendation that the Contractor promptly notify the IRS to attempt to resolve the tax situation.

(d) Any DoD determination under this clause is not subject to appeal under the Contract Disputes Act.

(End of clause)

252.233-7001 CHOICE OF LAW (OVERSEAS) (JUNE 1997)

This contract shall be construed and interpreted in accordance with the substantive laws of the United States of America. By the execution of this contract, the Contractor expressly agrees to waive any rights to invoke the jurisdiction of local national courts where this contract is performed and agrees to accept the exclusive jurisdiction of the United States Armed Services Board of Contract Appeals and the United States Court of Federal Claims for hearing and determination of any and all disputes that may arise under the Disputes clause of this contract.

(End of clause)

252.236-7000 MODIFICATION PROPOSALS - PRICE BREAKDOWN. (DEC 1991)

(a) The Contractor shall furnish a price breakdown, itemized as required and within the time specified by the Contracting Officer, with any proposal for a contract modification.

(b) The price breakdown --

(1) Must include sufficient detail to permit an analysis of profit, and of all costs for --

(i) Material;

(ii) Labor;

(iii) Equipment;

(iv) Subcontracts; and

(v) Overhead; and

(2) Must cover all work involved in the modification, whether the work was deleted, added, or changed.

(c) The Contractor shall provide similar price breakdowns to support any amounts claimed for subcontracts.

(d) The Contractor's proposal shall include a justification for any time extension proposed.

252.236-7001 CONTRACT DRAWINGS AND SPECIFICATIONS (AUG 2000)

(a) The Government will provide to the Contractor, without charge, one set of contract drawings and specifications, except publications incorporated into the technical provisions by reference, in electronic or paper media as chosen by the Contracting Officer.

(b) The Contractor shall--

(1) Check all drawings furnished immediately upon receipt;

(2) Compare all drawings and verify the figures before laying out the work;

(3) Promptly notify the Contracting Officer of any discrepancies;

(4) Be responsible for any errors that might have been avoided by complying with this paragraph (b); and

(5) Reproduce and print contract drawings and specifications as needed.

(c) In general--

(1) Large-scale drawings shall govern small-scale drawings; and

(2) The Contractor shall follow figures marked on drawings in preference to scale measurements.

(d) Omissions from the drawings or specifications or the misdescription of details of work that are manifestly necessary to carry out the intent of the drawings and specifications, or that are customarily performed, shall not

relieve the Contractor from performing such omitted or misdescribed details of the work. The Contractor shall perform such details as if fully and correctly set forth and described in the drawings and specifications.

(e) The work shall conform to the specifications and the contract drawings identified on the following index of drawings:

| Title | File | Drawing No. |
|---|---|---|
| SEE APPENDIX A | | |

(End of clause)

252.236-7008 CONTRACT PRICES - BIDDING SCHEDULES. (DEC 1991)

(a) The Government's payment for the items listed in the Bidding Schedule shall constitute full compensation to the Contractor for --

(1) Furnishing all plant, labor, equipment, appliances, and materials; and

(2) Performing all operations required to complete the work in conformity with the drawings and specifications.

(b) The Contractor shall include in the prices for the items listed in the Bidding Schedule all costs for work in the specifications, whether or not specifically listed in the Bidding Schedule.

252.243-7001 PRICING OF CONTRACT MODIFICATIONS (DEC 1991)

When costs are a factor in any price adjustment under this contract, the contract cost principles and procedures in FAR part 31 and DFARS part 231, in effect on the date of this contract, apply.

252.243-7002 REQUESTS FOR EQUITABLE ADJUSTMENT (MAR 1998)

(a) The amount of any request for equitable adjustment to contract terms shall accurately reflect the contract adjustment for which the Contractor believes the Government is liable. The request shall include only costs for performing the change, and shall not include any costs that already have been reimbursed or that have been separately claimed. All indirect costs included in the request shall be properly allocable to the change in accordance with applicable acquisition regulations.

(b) In accordance with 10 U.S.C. 2410(a), any request for equitable adjustment to contract terms that exceeds the simplified acquisition threshold shall bear, at the time of submission, the following certificate executed by an individual authorized to certify the request on behalf of the Contractor:

I certify that the request is made in good faith, and that the supporting data are accurate and complete to the best of my knowledge and belief.

---
(Official's Name)
---
(Title)

(c) The certification in paragraph (b) of this clause requires full disclosure of all relevant facts, including--

(1) Cost or pricing data if required in accordance with subsection 15.403-4 of the Federal Acquisition Regulation (FAR); and

(2) Information other than cost or pricing data, in accordance with subsection 15.403-3 of the FAR, including actual cost data and data to support any estimated costs, even if cost or pricing data are not required.

(d) The certification requirement in paragraph (b) of this clause does not apply to----

(1) Requests for routine contract payments; for example, requests for payment for accepted supplies and services, routine vouchers under a cost-reimbursement type contract, or progress payment invoices; or

(2) Final adjustment under an incentive provision of the contract.

252.247-7023 Transportation of Supplies by Sea (MAY 2002)

(a) Definitions. As used in this clause --

(1) "Components" means articles, materials, and supplies incorporated directly into end products at any level of manufacture, fabrication, or assembly by the Contractor or any subcontractor.

(2) "Department of Defense" (DoD) means the Army, Navy, Air Force, Marine Corps, and defense agencies.

(3) "Foreign flag vessel" means any vessel that is not a U.S.-flag vessel.

(4) "Ocean transportation" means any transportation aboard a ship, vessel, boat, barge, or ferry through international waters.

(5) "Subcontractor" means a supplier, materialman, distributor, or vendor at any level below the prime contractor whose contractual obligation to perform results from, or is conditioned upon, award of the prime contract and who is performing any part of the work or other requirement of the prime contract.

(6) "Supplies" means all property, except land and interests in land, that is clearly identifiable for eventual use by or owned by the DoD at the time of transportation by sea.

(i) An item is clearly identifiable for eventual use by the DoD if, for example, the contract documentation contains a reference to a DoD contract number or a military destination.

(ii) "Supplies" includes (but is not limited to) public works; buildings and facilities; ships; floating equipment and vessels of every character, type, and description, with parts, subassemblies, accessories, and equipment; machine tools; material; equipment; stores of all kinds; end items; construction materials; and components of the foregoing.

(7) "U.S.-flag vessel" means a vessel of the United States or belonging to the United States, including any vessel registered or having national status under the laws of the United States.

(b)(1) The Contractor shall use U.S.-flag vessels when transporting any supplies by sea under this contract.

(2) A subcontractor transporting supplies by sea under this contract shall use U.S.-flag vessels if--

(i) This contract is a construction contract; or

(ii) The supplies being transported are--

(A) Noncommercial items; or

(B) Commercial items that--

(1) The Contractor is reselling or distributing to the Government without adding value (generally, the Contractor does not add value to items that it contracts for f.o.b. destination shipment);

(2) Are shipped in direct support of U.S. military contingency operations, exercises, or forces deployed in humanitarian or peacekeeping operations; or

(3) Are commissary or exchange cargoes transported outside of the Defense Transportation System in accordance with 10 U.S.C. 2643.

(c) The Contractor and its subcontractors may request that the Contracting Officer authorize shipment in foreign-flag vessels, or designate available U.S.-flag vessels, if the Contractor or a subcontractor believes that --

(1) U.S.-flag vessels are not available for timely shipment;

(2) The freight charges are inordinately excessive or unreasonable; or

(3) Freight charges are higher than charges to private persons for transportation of like goods.

(d) The Contractor must submit any request for use of other than U.S.-flag vessels in writing to the Contracting Officer at least 45 days prior to the sailing date necessary to meet its delivery schedules. The Contracting Officer will process requests submitted after such date(s) as expeditiously as possible, but the Contracting Officer's failure to grant approvals to meet the shipper's sailing date will not of itself constitute a compensable delay under this or any other clause of this contract. Requests shall contain at a minimum --

(1) Type, weight, and cube of cargo;

(2) Required shipping date;

(3) Special handling and discharge requirements;

(4) Loading and discharge points;

(5) Name of shipper and consignee;

(6) Prime contract number; and

(7) A documented description of efforts made to secure U.S.-flag vessels, including points of contact (with names and telephone numbers) with at least two U.S.-flag carriers contacted. Copies of telephone notes, telegraphic and facsimile message or letters will be sufficient for this purpose.

(e) The Contractor shall, within 30 days after each shipment covered by this clause, provide the Contracting Officer and the Maritime Administration, Office of Cargo Preference, U.S. Department of Transportation, 400 Seventh Street SW., Washington, DC 20590, one copy of the rated on board vessel operating carrier's ocean bill of lading, which shall contain the following information:

(1) Prime contract number;

(2) Name of vessel;

(3) Vessel flag of registry;

(4) Date of loading;

(5) Port of loading;

(6) Port of final discharge;

(7) Description of commodity;

(8) Gross weight in pounds and cubic feet if available;

(9) Total ocean freight in U.S. dollars; and

(10) Name of the steamship company.

(f) The Contractor shall provide with its final invoice under this contract a representation that to the best of its knowledge and belief--

(1) No ocean transportation was used in the performance of this contract;

(2) Ocean transportation was used and only U.S.-flag vessels were used for all ocean shipments under the contract;

(3) Ocean transportation was used, and the Contractor had the written consent of the Contracting Officer for all non-U.S.-flag ocean transportation; or

(4) Ocean transportation was used and some or all of the shipments were made on non-U.S.-flag vessels without the written consent of the Contracting Officer. The Contractor shall describe these shipments in the following format:

| ITEM DESCRIPTION | CONTRACT LINE ITEMS | QUANTITY |
|---|---|---|
| | | |
| | | |
| | | |
| | | |

TOTAL_____

(g) If the final invoice does not include the required representation, the Government will reject and return it to the Contractor as an improper invoice for the purposes of the Prompt Payment clause of this contract. In the event there has been unauthorized use of non-U.S.-flag vessels in the performance of this contract, the Contracting Officer is entitled to equitably adjust the contract, based on the unauthorized use.

(h) In the award of subcontracts for the types of supplies described in paragraph (b)(2) of this clause, the Contractor shall flow down the requirements of this clause as follows:

(1) The Contractor shall insert the substance of this clause, including this paragraph (h), in subcontracts that exceed the simplified acquisition threshold in part 2 of the Federal Acquisition Regulation.

(2) The Contractor shall insert the substance of paragraphs (a) through (e) of this clause, and this paragraph (h), in subcontracts that are at or below the simplified acquisition threshold in part 2 of the Federal Acquisition Regulation.

(End of clause)

252.247-7024 Notification of Transportation of Supplies by Sea (MAR 2000)

(a) The Contractor has indicated by the response to the solicitation provision, Representation of Extent of Transportation by Sea, that it did not anticipate transporting by sea any supplies. If, however, after the award of this contract, the Contractor learns that supplies, as defined in the Transportation of Supplies by Sea clause of this contract, will be transported by sea, the Contractor --

(1) Shall notify the Contracting Officer of that fact; and

(2) Hereby agrees to comply with all the terms and conditions of the Transportation of Supplies by Sea clause of this contract.

(b) The Contractor shall include this clause; including this paragraph (b), revised as necessary to reflect the relationship of the contracting parties--

(1) In all subcontracts under this contract, if this contract is a construction contract; or

(2) If this contract is not a construction contract, in all subcontracts under this contract that are for--

(i) Noncommercial items; or

(ii) Commercial items that--

(A) The Contractor is reselling or distributing to the Government without adding value (generally, the Contractor does not add value to items that it subcontracts for f.o.b. destination shipment);

(B) Are shipped in direct support of U.S. military contingency operations, exercises, or forces deployed in humanitarian or peacekeeping operations; or

(C) Are commissary or exchange cargoes transported outside of the Defense Transportation System in accordance with 10 U.S.C. 2643.

(End of clause)

Section 00800 - Special Contract Requirements

ECONOMIC SURVEILLANCE

# Economic Surveillance Contract Language

Contractor shall report average pay rates and employment levels, for both domestic and international employees monthly. The information will be reported by labor category (as specified by USACE) and be specific to each work active work site. In addition the contractor shall report monthly non-labor contract spending for domestic and international contract expenses. This information will be reported by category (as specified by USACE) and will be specific to each active work site.

| Section I | | |
|---|---|---|
| **SAFETY EXPOSURE REPORT** | | **DATE**<br>*(USACE Supplement 1 to AR 385-40)* |
| **INSTRUCTIONS** | | |
| This report is due to the Contracting Officers' Representative (COR) no later than the 25th of each month. Contractor progress payments will no be processed until this report has not been submitted.<br><br>Be sure to include the complete Contract Number including task order number. | | |
| FROM AED:<br><br>☐ RESIDENT ENGINEER<br>☐ PROJECT ENGINEER<br>☐ PROJECT MANAGER<br><br>_____<br>SIGNATURE | TO AED:<br><br>SAFETY & OCCUPATIONAL HEALTH OFFICE | |
| **PRIME CONTRACTOR NAME** | **SUB-CONTRACTORS NAME** | |
| **CONTRACT NUMBER AND SHORT TITLE**: | | |
| **SITE LOCATION (nearest city and province or latitude and longitude)** | | |
| **MANHOURS THIS MONTH** | **MONTH** | **TOTAL MANHOURS YEAR TO DATE** |
| | | |
| **Prepared by (TYPE NAME and TITLE)** | **SIGNATURE** | |
| **CERTIFIED CONTRACTOR PROJECT MANAGER** | **SIGNATURE** | |
| **Section II** | | |

**INJURY AND ILLNESS LOG** **DATE:**

*(USACE Supplement 1 to AR 385-40 )*

**CONTRACT NUMBER AND SHORT TITLE:**

This report is due to the Contracting Officers' Representative (COR) no later than the 25th of each month. Contractor progress payments will no be processed until this report has not been submitted.

Attach an additional sheet if more space is needed.

**List all recordable injury cases during the month where medical treatment was administered.**

| | Name | Type Injury | Date of Injury | Date ENG Form 3394 Submitted to COR |
|---|---|---|---|---|
| 1 | | | | |
| 2 | | | | |
| 3 | | | | |
| 4 | | | | |
| 5 | | | | |

**1st Aid cases during the month. List all non-recordable injuries where first aid was administered.**

| | Name | Type Injury | Date of Injury | Return to Duty | Remarks |
|---|---|---|---|---|---|
| 1 | | | | | |
| 2 | | | | | |
| 3 | | | | | |
| 4 | | | | | |
| 5 | | | | | |
| 6 | | | | | |
| 7 | | | | | |
| 8 | | | | | |
| 9 | | | | | |
| 10 | | | | | |
| 11 | | | | | |
| 12 | | | | | |
| 13 | | | | | |
| 14 | | | | | |
| 15 | | | | | |
| 16 | | | | | |
| 17 | | | | | |
| 18 | | | | | |
| 19 | | | | | |
| 20 | | | | | |

| Section III | | | | |
|---|---|---|---|---|
| **ECONOMIC ANALYSIS REPORT** | **DATE:** | | | |
| **CONTRACT NUMBER AND SHORT TITLE**: | | | | |
| **SITE LOCATION (nearest city and province or latitude and longitude)** | | | | |
| **Employment** | **Average Number of Employees per Day** | | **Average Salary per Day** | |
| | **Afghan Employees** | **International Employees** | **Afghan Employees** | **International Employees** |
| Unskilled Labor | | | | |
| Semi Skilled Labor | | | | |
| Skilled Labor | | | | |
| Technical | | | | |
| Supervisory | | | | |
| Management | | | | |
| **Total** | | | | |
| **Expenditures (include Prime and Subcontractors)** | | | | |
| | **Local Expenditures (US$) per Month** | | **International Expenditures (US$) per Month** | |
| Sub Contracts | | | | |
| Life Support | | | | |
| Building Materials | | | | |
| Equipment | | | | |
| **Security** | | | | |
| **Total** | | | | |

**52.000-4105 WORKERS COMPSENASTION INSURACNE (DEFENSE BASE ACT) - CONSTRUCTION (NOV 2005)**

(a) This clause supplements FAR Clause 52.228-3

(b) The contractor agrees to procure Defense Base Act (DBA) insurance pursuant to the terms of the contract between the U.S. Army Corps of Engineers (USACE) and the USACE DBA insurance carrier unless the contractor has a DBA self-insurance program approved by the Department of Labor. The contractor shall submit a copy of the Department of Labor's approval to the contracting officer upon contract award. The current rate under the USACE contract is $8.50 per $100 of compensation for construction.

(c) The contractor agrees to insert a clause substantially the same as the one in all subcontracts to which DBA is applicable. Subcontractors shall be required to insert a similar clause in any of their subcontracts subject to the DBA.

(d) Should the rates for DBA insurance coverage increase or decrease during the performance of this contract, USACE shall modify the contract accordingly.

End of clause

**52.000-4106 DEFENSE BASE ACT INSURANCE RATES – LIMITATION FIXED-PRICE (NOV 2005)**

53 The U.S. Army Corps of Engineers (USACE) has entered into a contract with an insurance carrier to provide all Defense Base Act (DBA) insurance to USACE contractors at a contracted rate under the OSD/USACE Centrally-Managed Pilot DBA Insurance Program. The rates for this insurance are as follows:

Services @ $5.00 per $100 of compensation; or

Construction @ $8.50 per $100 of compensation.

54 Bidders/Offerors should compute the total compensation (direct salary plus differential, but excluding per diem, housing allowance and other miscellaneous post allowances) to be paid to employees who will be covered by DBA insurance and the cost of DBA totals in the spaces provided for the base period and whatever extension there may be thereafter, if applicable

(1) Compensation of Covered Employees: _____

(2) Defense Base Act Insurance Costs: _____

(3) Total Cost: _____

55 Bidders/Offerors shall include a statement as to whether or not local nationals or third country nationals will be employed on the resultant contract

End of clause

• **CNA Insurance – Contractor – Insurance Carrier**
– Roger Ellickson (312) 822-4395 Roger.ellickson@cna.com
The Continental Insurance Co.
Roger Ellickson
DBA CNA Insurance
333 S. Wabash Avenue
Chicago, IL 60685-1809

• **Rutherfoord International – Insurance Broker**
– James Walczak (703) 813-6544 jim.walczak@rutherfoord.com
Rutherfoord International
James Walczak
5500 Cherokee Avenue, Suite 300
Alexandria, VA 22312

CLAUSES INCORPORATED BY FULL TEXT

52.211-10 COMMENCEMENT, PROSECUTION, AND COMPLETION OF WORK (APR 1984)

The Contractor shall be required to (a) commence work under this contract within seven (7) calendar days after the date the Contractor receives the notice to proceed, (b) prosecute the work diligently, and (c) complete the entire work ready for use not later than 390 calendar days. The time stated for completion shall include final cleanup of the premises.

(End of clause)

52.211-12 LIQUIDATED DAMAGES--CONSTRUCTION (SEP 2000)

(a) If the Contractor fails to complete the work within the time specified in the contract, the Contractor shall pay liquidated damages to the Government in the amount of **$1977.44** for each calendar day of delay until the work is completed or accepted.

(b) If the Government terminates the Contractor's right to proceed, liquidated damages will continue to accrue until the work is completed. These liquidated damages are in addition to excess costs of repurchase under the Termination clause.

(End of clause)

52.211-13 TIME EXTENSIONS (SEP 2000)

Time extensions for contract changes will depend upon the extent, if any, by which the changes cause delay in the completion of the various elements of construction. The change order granting the time extension may provide that the contract completion date will be extended only for those specific elements related to the changed work and that the remaining contract completion dates for all other portions of the work will not be altered. The change order also may provide an equitable readjustment of liquidated damages under the new completion schedule.

(End of clause)

52.236-4 PHYSICAL DATA (APR 1984)

**(a) The indications of physical conditions on the drawings and in the specifications are the result of site investigations by either surveys, core borings, and/or reconnaissance.**

**(b) Weather conditions. Information regarding weather conditions is available in Technical Specification Section 01060 for examination by the bidders. If additional information concerning weather is required prospective bidders should contact the U. S. Army Corps of Engineers, Afghanistan Engineer District, House 1 Street 1, West Wazir Akbar Khan, (behind Amani High School), Kabul, Afghanistan.**

**(c) Transportation facilities. It shall be the responsibility of the Contractor to make his own investigation of available roads for transportation, of load limits of bridges on the roads, and of other road conditions, which may effect transportation of materials, equipment, and personnel to the site of the work.**

(End of clause)

52.246-12 INSPECTION OF CONSTRUCTION (AUG 1996)

(a) Definition. "Work" includes, but is not limited to, materials, workmanship, and manufacture and fabrication of components.

(b) The Contractor shall maintain an adequate inspection system and perform such inspections as will ensure that the work performed under the contract conforms to contract requirements. The Contractor shall maintain complete inspection records and make them available to the Government. All work shall be conducted under the general direction of the Contracting Officer and is subject to Government inspection and test at all places and at all reasonable times before acceptance to ensure strict compliance with the terms of the contract.

(c) Government inspections and tests are for the sole benefit of the Government and do not--

(1) Relieve the Contractor of responsibility for providing adequate quality control measures;

(2) Relieve the Contractor of responsibility for damage to or loss of the material before acceptance;

(3) Constitute or imply acceptance; or

(4) Affect the continuing rights of the Government after acceptance of the completed work under paragraph (i) of this section.

(d) The presence or absence of a Government inspector does not relieve the Contractor from any contract requirement, nor is the inspector authorized to change any term or condition of the specification without the Contracting Officer's written authorization.

(e) The Contractor shall promptly furnish, at no increase in contract price, all facilities, labor, and material reasonably needed for performing such safe and convenient inspections and tests as may be required by the Contracting Officer. The Government may charge to the Contractor any additional cost of inspection or test when work is not ready at the time specified by the Contractor for inspection or test, or when prior rejection makes reinspection or retest necessary. The Government shall perform all inspections and tests in a manner that will not unnecessarily delay the work. Special, full size, and performance tests shall be performed as described in the contract.

(f) The Contractor shall, without charge, replace or correct work found by the Government not to conform to contract requirements, unless in the public interest the Government consents to accept the work with an appropriate adjustment in contract price. The Contractor shall promptly segregate and remove rejected material from the premises.

(g) If the Contractor does not promptly replace or correct rejected work, the Government may (1) by contract or otherwise, replace or correct the work and charge the cost to the Contractor or (2) terminate for default the Contractor's right to proceed.

(h) If, before acceptance of the entire work, the Government decides to examine already completed work by removing it or tearing it out, the Contractor, on request, shall promptly furnish all necessary facilities, labor, and material. If the work is found to be defective or nonconforming in any material respect due to the fault of the Contractor or its subcontractors, the Contractor shall defray the expenses of the examination and of satisfactory reconstruction. However, if the work is found to meet contract requirements, the Contracting Officer shall make an equitable adjustment for the additional services involved in the examination and reconstruction, including, if completion of the work was thereby delayed, an extension of time.

(i) Unless otherwise specified in the contract, the Government shall accept, as promptly as practicable after completion and inspection, all work required by the contract or that portion of the work the Contracting Officer determines can be accepted separately. Acceptance shall be final and conclusive except for latent defects, fraud, gross mistakes amounting to fraud, or the Government's rights under any warranty or guarantee.

(End of clause)

252.232-7003 ELECTRONIC SUBMISSION OF PAYMENT REQUESTS (MAY 2006)

(a) Definitions. As used in this clause--

(1) Contract financing payment and invoice payment have the meanings given in section 32.001 of the Federal Acquisition Regulation.

(2) Electronic form means any automated system that transmits information electronically from the initiating system to all affected systems. Facsimile, e-mail, and scanned documents are not acceptable electronic forms for submission of payment requests. However, scanned documents are acceptable when they are part of a submission of a payment request made using one of the electronic forms provided for in paragraph (b) of this clause.

(3) Payment request means any request for contract financing payment or invoice payment submitted by the Contractor under this contract.

(b) Except as provided in paragraph (c) of this clause, the Contractor shall submit payment requests using one of the following electronic forms:

(1) Wide Area WorkFlow-Receipt and Acceptance (WAWF-RA). Information regarding WAWF-RA is available on the Internet at https://wawf.eb.mil.

(2) Web Invoicing System (WInS). Information regarding WInS is available on the Internet at https://ecweb.dfas.mil.

(3) American National Standards Institute (ANSI) X.12 electronic data interchange (EDI) formats.

(i) Information regarding EDI formats is available on the Internet at http://www.X12.org.

(ii) EDI implementation guides are available on the Internet at http://www.dod.mil/dfas/.

(4) Another electronic form authorized by the Contracting Officer.

(c) If the Contractor is unable to submit a payment request in electronic form, or DoD is unable to receive a payment request in electronic form, the Contractor shall submit the payment request using a method mutually agreed to by the Contractor, the Contracting Officer, the contract administration office, and the payment office.

(d) In addition to the requirements of this clause, the Contractor shall meet the requirements of the appropriate payment clauses in this contract when submitting payments requests.

(End of clause)

# SPECIFICATION SECTION 01010

# SCOPE OF WORK

## 1. GENERAL

### 1.1 PROJECT WORK SITES

This project consists of the design and construction of seventeen (14) Afghan National Police (ANP) Uniformed Police District Headquarters facilities in the Jawzjan and Sar-i-Pol provinces of Afghanistan. This project is defined as the provision by the contractor of all management, material, labor, and equipment, to construct and/or refurbish all utilities, roads, buildings, force protection measures, site security, de-mining activities, and other features as referenced herein.

### 1.2 WORK TO BE PERFORMED

The work shall include site adapting the provided design documentation for construction of the facilities described within the scope of work in accordance with the technical provisions (section 01015) and provided drawings. The facilities shall include structures as indicated in the SOW, technical provisions, and drawings and contain all necessary utilities for operation of such. All facilities shall be constructed in accordance with current building codes and construction practices promulgated by the national Afghan government. Afghan standards shall be supplemented by international building codes and standards if there is no applicable local standard. Any standard that can be determined to be substantially equivalent to the standards specified in this document may be used, but it is the Contractor's responsibility to show the equivalency of the alternate standard and the Contracting Officer must approve its use. A partial listing of references is included within the Request for Proposal.

Work at individual projects sites consists of the construction of a District Headquarters compound In accordance with the contract documentation. The compound consists of a one-story Multi-Purpose Police Security facility (approx 27m x 24m) which includes a Dining Facility (DFAC), berthing areas and offices/conference areas, armory and jail cells. It also includes a complete perimeter wall, electrical system, plumbing/sewage system, and water delivery system, and Entry Control Points (primary and secondary). The contractor will insure that all seismic requirements are met in the construction of the facilities.

The contractor is <u>encouraged</u> to use Afghan labor and subcontractors to the maximum extent possible commensurate with technical, security or other requirements or necessary considerations. The intent of this contract is also to use locally procured materials and labor to the maximum extent possible.

### 1.3 TECHNICAL REQUIREMENTS

Work shall be executed in accordance with the Technical Requirements in Section 01015 and in the drawings. All requirements set forth in the Scope of Work (Section 01010), but not included in the Technical Requirements and/or drawings, shall be considered as set forth in both and vice versa. In case of question or ambiguity, the Contracting Officer (KO) shall make the final decision. The KO shall furnish the decision in writing if requested by the Contractor. Site adaptation of the provided designs shall be approved by the Contracting Officer's Representative (COR) prior to the start of work. The Contractor shall verify all dimensions provided in the scope of work prior to the start of any construction.

### 1.4 ENGLISH LANGUAGE REQUIREMENT

All information shall be presented in English. The Contractor shall have a minimum of one English-speaking representative on site at all times when work is in progress.

## 1.5 PERIOD OF PERFORMANCE

The performance period for this contract shall be 390 calendar days (13 months) after notice to proceed. Liquidated damages in the amount of $1977.44 shall be assessed for every calendar day beyond the scheduled contract completion date and charged to the Contractor.

Intermediate milestones and requirements for completion of construction at individual project sites are provided below. The Contractor shall deliver site-specific submittals and construction products according to the following schedule:

| | Site Specific Submittals Due (calendar days after NTP) | Construction Completed (calendar days after approval of site specific submittals) |
|---|---|---|
| Priority 1 Sites (6 Sites) | 30 | 180 |
| | | |
| Priority 2 Sites (6 Sites) | 150 | 150 |
| | | |
| Priority 3 Sites (2 Sites) | 240 | 120 |
| | | |

This schedule allows for up to 30 days for the Contractor to achieve approval of site specific submittals. The overall contract performance period may decrease from 390 days if the contractor obtains approval on site specific submittals for Priority 3 sites in less than 30 days.

It is the intent of these specifications to allow the Contractor to organize the construction program in the manner that the contractor believes will deliver the program most efficiently subject to the constraints described above. The Contractor shall assign priorities to the 14 project sites, and provide the Government with a schedule of completion for them that conforms with the requirements of this paragraph within 10 days of notice to proceed.

It should be emphasized that the durations described above represent minimum requirements. The Contractor is encouraged to present alternate approaches that will deliver the construction program in less time.

Each site shall have a separate performance period and notice to proceed. Each ANP District Headquarters Compound shall be considered a single project for the purpose of scheduling and project submittals.

## 1.6 SUBMITTALS

Submittals and a Submittal Register are required as specified in Section 01335 of the Basic Contract.

## 1.7 CONSTRUCTION SITE LOCATIONS

Individual project site locations are provided below in Table - Construction Site Locations. Actual construction sites will be provided to the contractor after award of the contract and prior to notice to proceed. For the purpose of bid preparation, the contractor shall assume that specific construction sites will be located within 1 kilometer of the specified district center.

## 1.8 SITE SECURITY

The Contractor shall provide perimeter force protection security for the developing site. Security may include but is not limited to fence and private security guards. Perimeter security shall prevent unauthorized site access and provide safety protection to the Contractor work force and government personnel for the duration of the project. The contractor is solely responsible for security however local police shall be coordinated with regarding security.

## 2. GENERAL REQUIREMENTS FOR POLICE PROGRAM FACILITIES

All standard construction amenities and details such as heating, lighting, site drainage, utility connections, etc. shall be implied as a construction requirement. Drawings referenced are provided as part of the contract documentation. Walkways are required to connect all buildings, facilities, and features such as parking lots, power plants, etc.

The Contractor shall site adapt and construct the facilities in accordance with the requirements stated in Section 01010, Scope of Work, and in Section 01015, Technical Requirements. The site adaptation and construction work shall include but not be limited to the efforts described in the following sub-paragraphs.

### 2.1 MASTER PLANNING, SITE SPECIFIC SURVEYS & SUBMITTALS

#### 2.1.1 PROGRAMATIC DESIGN CHARRETTE

The contractor shall prepare a programmatic Master Site Plan that will be generally applied to all construction locations. The Master Site Plan shall include all locations of construction office/storage containers, laydown and construction debris removal area. The development of the master plan will include participation in a charrette that will be conducted at the Corps of Engineers Headquarters Office in Kabul. The charrette shall be scheduled by the Government to occur within ten (10) calendar days of notice to proceed. The programatic Master Site Plan shall be submitted to the Government no later than twenty (20) days after Notice to Proceed. Site specific adaptations of the programmatic Master Site Plan shall be submitted to the Government according to the schedule provided above.

#### 2.1.2 SITE SPECIFIC SURVEYS & SUBMITTALS

For individual construction sites, the Contractor shall perform a geotechnical investigation as defined in Section 01015, perform a topographic survey of the site, adapt the programmatic Master Site Plan to the conditions applicable for specific locations, and prepare a complete grading, landscaping and site drainage plan with existing grades, proposed grades, and building finished floor elevations based on the technical requirements contained in the Request for Proposal. The Contractor shall not locate facilities in wadis or dry river beds. The finish floor elevation of all facilities and slabs shall be a minimum of 50 mm above flood elevations or river banks, whichever is at the highest elevation. The contractor will provide drawings and details to describe any adaptations to the standard design that will be required for individual project sites as a site specific submittal as necessary. At a minimum, site specific submittals shall include: the geotechnical investigation report; drawings, details and calculations associated with well construction; and drawings, details and calculations associated with sanitary sewer and leach field construction. The schedule for delivery of site-specific submittals is included above at paragraph 1.5, Period of Performance.

### 2.2 DE-MINING ACTIVITIES

The contractor shall search, identify and clear all mines and unexploded ordnances (UXO's) from the entire site. The contractor shall provide the government a letter indicating that the site is clear of mines and UXO's and is available for construction operations to proceed. All mine and UXO clearing shall be done in accordance with the International Mine Action Standards (IMAS) and clearance shall be accomplished to the anticipated foundation depth. These standards can be found at http://www.mineactionstandards.org. Work shall not commence in any area that has not been cleared.

For any and all areas on or around the site, it is the responsibility of the Contractor to be aware of the risk of encountering mines and UXO's and to take all actions necessary to assure a safe work area to perform the requirements of this contract. The Contractor assumes the risk of any and all personal injury, property damage or other liability, arising out of and resulting from any Contractor action hereunder. In any case the Contractor shall be responsible for identifying all mines and UXO's within the entire site. Once the mines and UXO's are identified, the Contractor shall place them in a location in accordance with IMAS. This work shall proceed in phases, concurrently with other construction efforts as determined by the contractor. If a UXO/mine is encountered after site clearance and during project construction, UXO/mine disposal shall be handled in accordance with Section 01015, Technical Requirements. For the purpose of bid preparation the contractor shall assume that only site clearance will be required. If UXO removal is determined to be necessary for a specific project site the contractor's reimbursement for this work will be negotiated as required.

## 2.3 DEMOLITION AND GRADING

As applicable, the contractor shall demolish all existing structures and buildings at the site prior to commencement of new work. The Contractor shall remove and dispose of all debris, concrete, and foundations. The Contractor shall verify the location of debris disposal with the Contracting Officer. The Contractor shall perform complete final site grading after installation of all required drainage structures per the Drainage Plan that shall be prepared as part of this project and after installation of any other buried utilities or other project components.

Native crushed stone 100 mm thick shall be placed around all buildings, from the building wall or building landscaping out 2m and all areas of anticipated foot or vehicle traffic to reduce erosion and to provide dust control. Compact existing earth surface to 95% density.

For the purpose of bid preparation, the contractor shall assume that specific construction sites will be located on flat ground requiring only routine clearing and grubbing prior to construction. If demolition of structures is required for a specific project site the Contractor's reimbursement for this work will be negotiated as required.

## 2.4 WATER SYSTEM

Construct a water supply system for the compound, to include all facilities, in accordance with the contract documentation. Construction shall include development of a ground well water source; provide water well pump(s) and service booster pumps, chlorination and water storage tank(s). Storage tank(s) on the roof of the Headquarters building shall be used to provide sufficient water pressure. Should sufficient pressure not be achieved, then pumps will have to be provided. Tank capacity shall be at least 3,000 gallons (1 day at a use of 50 gal per person per day). The tank shall be installed on the roof of the headquarters building as indicated on the drawings.

Domestic cold and hot water shall be provided in the Headquarters building to serve the water usage and plumbing fixtures provided for that facility. Water service shall enter the building in a mechanical, toilet, storage, or similar type space. All water piping shall be routed parallel to the building lines and concealed in all finished areas. Insulation and heat trace shall be provided where required to control sweating of pipes or to provide protection from freezing.

The Contractor shall install water distribution mains, branches, laterals, lines and service connections to include all pipe, valves, fittings and appurtenances. Exterior water line construction shall include service to all buildings. The required Average Daily Demand (ADD) is 50 gallons per capita per day (gpcd). Provide one outside water tap per building for landscaping purposes. All new water wells shall be located inside the compound. The site population is 60 personnel.

## 2.5 SANITARY SEWER SYSTEM

Sanitary sewer collection and treatment system shall be constructed by contractor. Sewer collection system shall consist of gravity sewer pipe and appurtenances such as manholes, cleanouts and building service connections. The gravity sewer collection system shall connect to the sewage treatment and effluent disposal system. The Contractor shall construct the systems in accordance with criteria established in UFC 3-240-07FA, *Sanitary and Industrial Wastewater Collection-Gravity Sewers and Appurtenances* and UFC 3-240-02N *Wastewater Treatment Systems Augmenting Handbook*. The sewage collection and treatment system and effluent disposal shall be constructed to accommodate a facility population as specified in the Scope of Work. System capacity shall be calculated based on a hydraulic waste load that is equivalent to 80 percent of the Required Daily Demand for the water system as specified in these technical requirements, or as 33 gallons per capita per day (gpcd), whichever is greater. A geotechnical investigation of the proposed sewage treatment site is required and the contractor shall construct the sewage treatment system to be compatible with site and soil conditions. Sewage treatment system shall be a traditional septic tank absorption field effluent disposal system. Construction requirements and criteria for septic tank & subsurface absorption field and mound systems shall be in accordance with guidelines outlined in TM 5-814-3/AFM 88-11, *Volume III Domestic Wastewater Treatment* and UFC 3-240-02N *Wastewater Treatment Systems Augmenting Handbook*. Minimum acceptable percolation rates are categorized as slow permeable 60 to 120min/in (24-48min/cm). The sewage treatment system shall be sited the maximum distance possible from the living quarters, working areas, public use areas and proposed facilities. The septic tank shall not be located under a building, road, or parking lot. Bollards shall be erected 1.2 meters on center around the septic tank to protect it from vehicle traffic. The sewage treatment system shall be accessible by road for maintenance. Construction of the sewage collection and treatment system must account for all current flows as well as anticipated flows. Storm water flow shall not be considered in the waste water treatment system. If a leach field is found to be unsuitable the Contractor shall notify the COR for guidance.

## 2.6 SITE POWER, ELECTRICAL, DISTRIBUTION SYSTEM, AND FUEL STORAGE

Contractor shall construct electrical systems as per the design for the facilities included in this Contract. In addition, the Contractor shall also site adapt and construct the electrical systems for the Guard Towers. Contractor shall refer to Section 01015 Paragraph 9 for the detail description and requirements of the Systems. Major Electrical Systems are, but not limited to: (a) On-Site Power Plant, (b) Site Secondary Power Distribution System, (c) Interior Secondary Power Distribution System, (d) conduit for future telephone system, (e) Closed Circuit Television System and (f) Lightning Protection System. Bulk fuel storage tanks are required for a 30 day supply of fuel. These tanks shall be filled with fuel upon completion of the contract.

2.6.1 On-Site Power Plant: Power Plant shall consist of two (2) 80 KW (100 KVA) generators to provide service to the Headquarters Compound. Generators shall be provided with a synchronizer-switch, so that when total power demanded from one generator reaches 90% of the generators maximum, the second generator shall automatically start and supplement the first, sharing the load between the two generators equally. Generators shall be provided inside “weather-proof” enclosures. Generator pads shall be constructed with a reinforced concrete floor slab. A covered shelter shall be provided. The shelter shall be pole mounted and shall provide coverage for the generator and switchboard pads.

2.6.2 Site Secondary Power Distribution System: Site Secondary Power Distribution System shall include installation of underground cables in direct buried PVC Schedule 40 conduit from the Power Plant to the individual facilities.

2.6.3 Interior Secondary Power Distribution System: Interior Secondary Power Distribution System, rated at 380/220 volts, 3 phase, 4 wire and 50 Hz. with wiring installed in surface mounted conduits, shall be provided in all facilities, including guard towers and guard house / shacks.

2.6.4 Conduit for Future Interior Telephone System: Provide mounted conduits with pull wires and a cross connection box only.

2.6.5 Closed Circuit Television (CCTV) System: CCTV shall be provided in the HQ Building to monitor the jail cells.

2.6.6 Lightning Protection System. Lightning Protection System shall be provided on HQ Building and guard towers to protect against lightning strikes.

**2.7 FORCE PROTECTION MEASURES**

The Contractor shall construct force protection measures as detailed in the drawings at Appendix A which include perimeter walls, gates, vehicle barriers, guard shack/houses and guard towers. Construct perimeter walls as indicated on the site plan from masonry or native stone when available, as shown on the drawings. Install outriggers and single-strand concertina wire on top of the wall. The walls shall measure at least 2.4m high with a thickness of the walls not less than 0.60m. Guard towers shall be constructed at all four site corners at an offset. Fragmentation film shall be placed over the guard tower windows. Guard tower structures shall include exterior perimeter catwalk to allow for all-around visibility. Outrigger supporting arms shall be “Y” shaped with post securely embedded into the top of the wall. Posts shall conform to the IBC standard for Pipe, Steel, Hot Dipped Zinc Coated (Galvanized) Welded.

The Primary Entry Control Point (ECP) will include a manually operated swing steel gate for vehicles and a separate gate for personnel. The Primary ECP will also include active vehicle barriers, a gate house, a guard shack, drop metal swing arm gate, and passive (strategically placed – serpentine pattern) vehicle barriers to prevent high speed vehicle entry into compound. Design vehicle for ECP entrance is a fuel delivery/septic tank truck typical for region of project site.

The Secondary Entry Control Point (ECP) will include a manually operated, swing gate, personnel gate, guard shack, drop metal swing arm gate, active vehicle barriers, and passive (strategically placed – serpentine pattern) vehicle barriers to prevent high speed vehicle entry into compound.

Swing gates shall be a pair of 3.65m wide x 2.4m high leafs, constructed of a steel tube frame and steel tube intermediate posts and rails. Each leaf framework shall have a min. 16 gage steel plate attached to it. The design of the gates shall insure that it is dimensionally stable, square, true and planar. Gate leafs shall not rack or deflect when installed on its hinges. Gates shall have a sufficient number of hinges, anchor mounted to the exterior masonry walls, to support each gate leaf. Provide a locking mechanism that holds the gates together when in the closed position as well as a drop bolt that engages a steel sleeve embedded in the pavement.

At a distance of 31m from the primary ECP, known as the stand-off ECP, design and construct a drop metal swing arm. The outside lanes will be lined with either rock or filled concrete containers 1m high.

Guard Shack - Construct a guard shack, located outside the compound at the stand-off primary and secondary ECP locations, where the drop metal swing arm will be built. The guard shack shall be an 11 SM building consisting of a reinforced concrete foundation and floor slab, reinforced concrete masonry walls and a concrete roof. The floor finish shall be sealed concrete. The building shall have 4 horizontal sliding windows, one located in each wall. Provide 1 exterior metal door.

Guard House - Construct a guard house, located outside the compound walls, next to the primary ECP, where the gate will be located, as indicated on the site plan. The gate house shall be a 14.7 SM building consisting of a reinforced concrete foundation and floor slab, reinforced concrete masonry walls and a concrete roof. The exterior wall finish shall be stucco and the interior finish shall be plaster. The finished ceiling shall be either gypsum wallboard or plaster. Provide mineral fiber insulation in the ceiling space. The interior of the building shall have one 8.3 SM private office, an 11 SM break room, a 2 SM storage room, and a 2.5 SM toilet room. The building shall have 4 horizontal sliding windows, one located in each wall. Provide 2 exterior metal doors.

Guard Towers – The contractor shall construct four (4) guard towers in accordance with the contract documentation. The following criterion applies to the guard tower construction:

Steel surfaces shall be provided with a galvanized coating. Exposed surfaces shall be provided with a shop-primed finish in addition to the galvanized coating. Commercial grade hinges are required on personnel door and awning windows – three hinges per window / door. Door pull to be standard door pull product or can be fabricated out of metal or wood. Product should be sturdy and functional. Install door stop in door frames on all sides. Install slide bolts on all doors or some equivalent locking device. Pre drill holes in Plexiglas for attachment with screws. Windows can be configured to swing up or to slide in a wood track in order to open

The roof shall have a gutter and downspout system to evacuate rain accumulation. The down spout shall run the entire height of the tower and drain at the finished ground level to a splash block. The stairs and platforms shall be constructed per OSHA Standards, with entry to the tower through a lockable security door. Guard Tower shall have electric unit heating and capable of maintaining a minimum temperature of 20 degrees C.

Guard towers shall be provided with general lighting and shall be fitted with one 360-degree omni-directional searchlight. Do not use white lights inside guard towers. Use red, blue, or black lenses in interior guard tower lighting. One weather-resistant duplex receptacle shall be provided as required for general use. The area in the immediate exterior vicinity of the guard tower shall be provided with an all weather non-slip surface and shall be graded to sufficiently drain away from structure. Provide conduit to the tower for installation of a future internal communication system.

All four guard towers will be placed at an offset in the corners of the perimeter compound; Contractor will insure that all seismic requirements are met in the design and construction of the facility.

## 2.7 ROAD NETWORK

The Contract shall construct a parking area, roads, and walkways in accordance with the contract documentation.

## 2.8 TRASH POINT

The Contractor shall place, in a location convenient for easy removal, a trash collection point. It shall be located outside the compound walls. The trash point shall be a 1.8 m X 1.8 m concrete pad with a 1.8 meter tall wooden fence about the perimeter. One side shall have a 1.2 m wide gate entrance.

## 2.9 DISTRICT HEADQUARTERS BUILDING

The contractor shall site adapt and construct the District Headquarters building in accordance with the scope of work, technical specifications, and drawings. The one story headquarters building shall be a 593.7 SM building consisting of a reinforced concrete foundation and floor slab, reinforced concrete masonry walls and a concrete roof slab with truss supported metal roof.

This facility will contain the following functions: berthing of personnel; commander and other senior personnel berthing; kitchen/dining; latrines to include sinks, toilets, showers; security area to include holding cells, latrines, armory, and guard area; administrative space (offices and conference room, and utility rooms. A covered area, outside of the building, shall be provided for storage of propane tanks. The following criteria and guidance is provided:

a. Foundation work and floor - Construct the foundation in accordance with the contract documentation. Contractor will insure that all seismic requirements are met in the construction of this facility. Foundation excavation shall extend a sufficient distance from walls and footings to allow for placing and removal of forms. The Contractor shall direct surface water away from the excavation to

prevent erosion and undermining the foundation by constructing diversion ditches, dikes, or other site grading.

b. Exterior and interior wall construction, interior columns, and roof - Construct the exterior and interior walls, interior columns, and roof in accordance with the contract documentation. The Contractor will insure that all seismic requirements are met in the design and construction of this facility.

c. Security Area (Multi-purpose police security area) - The Contractor shall construct a multi-purpose police security facility (which includes a dining facility, berthing areas, admin spaces, armory, and holding cells in accordance with the contract documentation.

d. Holding cells - Construct holding cells in accordance with all contract documents. The Contractor shall construct a walkway in the southern area of the two jail cells and allow personnel access from the guard room to the jail cells. The holding cells will not have windows and each holding cell shall have reinforced concrete block walls or concrete and polystyrene panel walls. Each holding cell will have a 11-13 gauge steel door with a dead-bolt lock. The door shall have a pass-through slot for passing of food trays with a hinged cover lockable from the outside. Built into the bottom of the door shall be a 0.3m wide by 0.5m tall door for passing a bucket in and out with a hinged cover lockable from the outside. Install a 2.4m long bench securely bolted to the floor with a wall mounted steel bar. Contractor will construct an Afghan toilet (eastern style) oriented in the correct cultural direction with a screen about 1.3m high in front of the toilet. Per design, separate gender holding cells will be constructed. The Contractor shall install a digital video recorder and video monitoring equipment in the guard room and two surveillance cameras. Each surveillance camera will be angled in the direction of the jail cells.

e. Armory - The armory will not have windows and shall have reinforced concrete block walls with a 11-13 gauge steel door with a dead-bolt lock. All cells of exterior and interior CMU walls shall be fully grouted and reinforced with 16 mm rebars at 40 cm on center vertically and horizontally. Roof slab shall be consisting of 200 mm thick concrete slab reinforced with double layers of rebars.

f. Guard room - Construct, next to the front entrance of the Multi-Purpose Police Security Facility, a guard room in accordance with the contract documents, with access capabilities from the guard room to the jail cells.

g. Dining Facility (DFAC) – The Contractor shall construct a kitchen and dining area in accordance with the contract documents with the capability to prepare and feed 60 personnel at one sitting. The Contractor shall provide stoves, countertops, electrical capacity and floor space for future refrigerators/freezers (not in contract) within the DFAC. Fuel for cooking is discussed in paragraph 2.8.o below. Floor drains shall be incorporated into the dining area with the floor sloped to drain. Trench type floor drains shall be installed in the kitchen cooking and dishwashing areas. Hand wash stations in the entry vestibule shall be provided. Trough type sinks shall be used. Install a large wash basin with a low rim height designed for washing very large pots. Fire protection is to be provided by fire extinguishers at easily accessible locations.

h. Berthing rooms - The Contractor shall construct multiple berthing rooms for males based on the population of 60 personnel. Construct female berthing facilities to support a female population of 3 personnel. Sufficient berthing areas shall be constructed as open bay rooms in accordance with the contract documentation. Ceiling fans shall be installed for ventilation.

i. Separate berthing rooms - Construct the District Police Commander's and Mid-grade berthing facilities, which shall be located separately from the lower-grade berthing facilities in accordance with the contract documents. Ceiling fans shall be installed for ventilation.

j. Toilet and shower facilities - Construct toilets, sinks and wash areas in accordance with the contract documents. Separate male and female restrooms shall be constructed. Electric cabinet heaters suitable for a wet environment shall be utilized to provide heat in the facility. Electric hot water heaters

shall be installed to provide hot water to the showers and sinks. Shower stalls shall be large enough to allow room to dress and undress between an outer and inner shower curtain. Stalls shall be no less than 2 m x 1.5 m and shall have a solid door on the outside. Showers shall contain a mixing valve for hot and cold water mixing. There shall be a fixed shower head nozzle attached directly to the pipe. All toilets shall be eastern style with wall-mounted faucets. Urinals are not required. All sinks shall be trough type constructed of block and concrete with ceramic tile exterior and lining capable of withstanding abuse. The building shall be constructed with exhaust fans to ventilate steam to the outside environment and, where required, insulated piping to prevent freezing of water pipes in winter. All water supply plumbing shall be exposed and galvanized.

k. Window and door installation - Caulk all joints between masonry and wood window and doorframes to prevent the passage of wind and water. Material should be silicon applied with a caulking gun to a dry, clean surface.

l. Wall and ceiling finishes - Complete the wall and ceiling finishing/painting in accordance with the contract documentation.

For facilities besides the Multi-Purpose Police Security Facility, brick or CMU surfaces, are to receive a 1cm plaster coat. The contractor shall paint the interior walls and trim, and the interior ceiling of the building. The surfaces include the interior wall space, the trim, windows, doors, and other interior items. The Engineer shall select colors. All the walls will be painted with water-based paint and building exteriors shall be painted with acrylic based paint. Water-based trim paint will be used for all wood surfaces such as doors, window frames, etc. Contractor will paint according to the following schedule:

PAINT SCHEDULE:

| | | |
|---|---|---|
| All Surfaces | Water Based Primer | 1 Coat |
| Interior Walls | Water Based Paint | 2 Coats |
| Interior Ceilings | Water Based Paint | 2 Coats |

All CMU, brick or other porous masonry surfaces shall receive a filler coat prior to finish coats. All surfaces shall be free of dust, dry, and clean prior to painting. Rooms shall be swept and cleaned before painting begins. The time between coats shall conform to the time recommended by the manufacturer. In latrine and shower rooms (if required), use waterproof paint. Contractor will clean up all paint drips, splatters, and spills on surfaces such that no paint stain remains.

m. Communication - Complete all communication conduits lines to support the Multi-Purpose Police Security Facility and other areas of the HQ building in accordance with the contract documentation. Provide conduit and wiring only. An internal telecommunications system for the compound is not included in this contract.

n. Electrical – Provide and install new electrical devices including light fixtures, light bulbs, light switches, receptacles, distribution panels, conductors, junction boxes, conduit and other items as shown schematically on the electrical drawings. The contractor is responsible to wire all facilities. The contractor shall construct and install according to the lighting plan, the ac distribution board, the lighting distribution board and the power distribution board.

o. Fuel source for heating/cooking – The contractor shall use propane for heating and cooking, if the Contractor confirms that propane is readily available in the location(s) within the scope of work. The Contractor shall develop a report confirming the availability or non-availability of propane and provide to the COR. This report will be considered a site specific submittal and provided on the schedule described above. In the event that propane is not available, then heating and cooking will be accomplished using wood stoves. Proper ventilation shall be required to assure that fumes/smoke does not build up within the facility.

p. Fire extinguishers shall be installed where indicated in the contract documentation.

q. Concrete stoops shall be provided at all exterior doors.

r. Plumbing

- Unless noted elsewhere, the following typical plumbing fixtures shall be provided:

- Eastern Water Closet with flush tank assembly. Enameled cast iron, recessed floor mounted. Provide a cold water spigot 300mm above finished floor on the right (from a perspective of standing inside of the cubicle and looking out) sidewall of the cubicle

- Lavatories. Multiple wall mounted faucets mounted over a CMU block basin, finished with ceramic tile, and sloped to a single drain.

- Shower. Provide valves for manual mixing with hot and cold water. In addition to a showerhead, provide each shower stall with a threaded faucet approximately 1.2 m AFF with hot and cold-water controls, mixing valve and a diverter type valve so water can be directed to either the shower or to the lower faucet.

- Kitchen Sinks. Single Bowl size as indicated on plans, corrosion resisting formed steel. Faucet bodies and spout shall be cast or wrought copper alloy. Handles, drain assembly, and stopper shall be corrosion resisting steel or copper alloy.

- Grease Interceptor. Steel construction, manual cleaning type with removable checker plate cover, complete with flow control valve.

- Shower Drain. Cast iron construction with galvanized body, integral seepage pan, and adjustable perforated or slotted chromium plated bronze, nickel-bronze, or nickel brass strainer consisting of a grate and threaded collar.

- Trench Drain. Cast iron construction with galvanized body, integral seepage pan, and adjustable perforated or slotted chromium plated bronze, nickel-bronze, or nickel brass strainer consisting of a grate and threaded collar. This style of drain shall be employed in the kitchen area of the DFAC in response to kitchen cleaning practices of the local national staff. Also, access needs to be provided to the solids collector for routine emptying.

- Room hose bibs and floor drains shall be provided as required. Kitchen hose bibs to be supplied with connecting hose on reel including approximately 12 meters of hose. Provide clean-up spray nozzle with hose assembly.

- Floor drains shall be provided in each room that contains a water source. Floor drains shall be provided in the mechanical equipment and toilet rooms as required. Drains shall be located near toilet partitions in toilet rooms. In mechanical rooms, floor drains shall be provided to avoid running drain piping long distances above or over the floor. Toilet room floor drains are similar except are provided with built-in, solid, hinged grate. A trench drain shall be provided for the Kitchen. All waste and vent piping shall be provided in accordance with the latest edition of IPC. Drain outlet shall use p-trap system to trap sewer gases. P-trap drain should be a one-piece system without removable parts.

## 3. SUBMITTAL SCHEDULE

Note: The contractor shall provide separate submittal sets for each of the construction sites described in this contract.

| **Description** | **Required by Specification Section:** | **Due by:** |
|---|---|---|
| Charrette | 01010, 2.1.1 | Scheduled by Government within 10 days of NTP |
| Schedule of Project Site Completions | 01010, 1.5 | 10 days after NTP |
| Programmatic Master Site Plan | 01010, 2.1.1 | 20 days after NTP |
| Site Specific Submittals | 01010, 1.5 | Per schedule provided in Paragraph 1.5 |
| Conference minutes | 01335, 3.7.1 | Within 7 days of each conference |
| Contractor information | 01312, 1.6.1.1 | Within 14 days of receipt of QCS software from the Government |
| Subcontractor administrative data | 01312, 1.6.1.2 | Within 14 days of receipt of QCS software from the Government |
| Initial project schedule submission | 01321, 3.3.1 | Within 10 days of notice to proceed |
| Updated project schedule | 01321, 3.4.1 | Within 4 days of Bi-weekly progress meeting |
| Form 4288 identifying items requiring formal submittal | 01335, 3.2.2 | Within 14 days of notice to proceed |
| Quality Control Plan | 01451A, 3.2 | Within 14 days of notice to proceed |
| Daily CQC report | 01451A, 3.9 | Daily |
| Quality control plan coordination meeting | 01451A, 3.3 | Before construction start |
| Accident Prevention Plan | 01525, 1.8 | 7 days prior to date of preconstruction conference |
| Activity Hazard Analysis | 01525, 1.9 | 7 days before start of each construction phase |
| AS-Built Documents | | Upon Completion |
| | | |

# Construction Site Locations
# Uniformed Police District Headquarters

| Site Location | Province |
|---|---|
| Darzab | Jawzjan |
| Faizabad | Jawzjan |
| Kamhyab | Jawzjan |
| Khannaga | Jawzjan |
| Khwaja Dukoh | Jawzjan |
| Mangajak | Jawzjan |
| Mardyan | Jawzjan |
| Qargin | Jawzjan |
| Qoshtepa | Jawzjan |
| Suzma Qala | Sar-i-Pol |
| Sayad | Sar-i-Pol |
| Kohistanat | Sar-i-Pol |
| Balkhab | Sar-i-Pol |
| Sangcharak | Sar-i-Pol |
| | |
| | |
| | |
| | |
| | |
| | |
| | |
| | |
| | |
| | |
| | |
| | |
| | |
| | |
| | |
| | |
| | |
| | |
| | |
| | |
| | |

# SECTION 01015

# TECHNICAL REQUIREMENTS

## 1. GENERAL

1.1 The Contractor's site adaptation of the design and construction must comply with technical requirements contained herein. All requirements set forth in Section 01010 (Scope of Work) but not included in the Technical Requirements, shall be considered as set forth in both, and vice versa. The Contractor shall provide design and construction using the best blend of cost, construction efficiency, system durability, ease of maintenance and environmental compatibility.

1.2 These design and product requirements are minimum requirements. The Contractor is encouraged to propose alternate design or products (equipment and material) that are more commonly used in the region; will be equally or more cost effective or allow for more timely completion, but furnish the same system durability, ease of maintenance and environmental compatibility. The Contractor will be required to submit information as requested by the Contracting Officer to make a comparison of the proposed alternate. All variations must be approved by the Contracting Officer.

## 1.3 ASBESTOS CONTAINING MATERIALS

Asbestos containing material (ACM) shall not be used in the design and construction of this project. If no other material is available which will perform the required function or where the use of other material would be cost prohibitive, a waiver for the use of asbestos containing materials must be obtained from the Contracting Officer.

## 1.4 SAFETY

### 1.4.1 Unexploded Ordnance (UXO)

The Contractor shall perform search and clearing operations for clearance of mines and UXO’s and provide the government a letter indicating that the site is clear of unexploded ordnance and is available for construction operations to proceed. The Contractor shall be responsible for clearing the entire site of all mines and unexploded ordnance (UXO). All mine and UXO clearing shall be done in accordance with the International Mine Action Standards (IMAS), or Afghanistan Mine Action Standards (AMAS) whichever is more stringent, and clearance shall be accomplished to the anticipated foundation depth. These standards can be found at http://www.mineactionstandards.org/imas.htm. No work will commence in any area that has not been cleared. If during the performance of the work under this contract, the Contractor encounters U.S. UXO, the Contractor is to immediately stop work in this area and notify the Contracting Officer.

NOTE: For previous de-mining information, the following points of contact from the UN Mine Action Center for Afghanistan are provided:

Reiko Kurihara, project manager, email reiko@unmaca.org
Cell phone: +93 070 284 686

Sandy Powell, chief Operations Officer, sandy@unmaca.org
Cell phone: +93 (0) 79 330 992

#### 1.4.1.1 Unexploded Ordnance (UXO) Safety Support During Construction

It is the responsibility of the Contractor to be aware of the risk of encountering UXO and to take all actions necessary to assure a safe work area to perform the requirements of this contract. If after the entire site has been cleared of UXO/mines per the International Mine Action Standards (IMAS) and clearance is done to the anticipated

foundation depth, the Contractor becomes aware of or encounters UXO or potential UXO during construction, the Contractor shall immediately stop work at the site of the encounter, move to a safe location, notify the COR, and mitigate any delays to scheduled or unscheduled contract work. The Contractor shall remove and dispose of UXO's per the International Mine Action Standards (IMAS). These standards can be found at http://www.mineactionstandards.org. The Contractor assumes the risk of any and all personal injury, property damage or other liability, arising out of and resulting from any Contractor action hereunder. In these cases the contractor shall be required to identify and dispose of the ordnance.

**1.4.1.2 Explosives Safety**

**1.4.1.2.1 General Safety Considerations**

General safety considerations applicable to personnel, both essential and non-essential, at project sites where UXO may be encountered include:

a. Do not carry fire or spark-producing devices.
b. Do not conduct explosive or explosive-related operations without approved procedures and proper supervision and UXO safety support.
c. Do not become careless by reason of familiarity with UXO or the reported probability level of UXO contamination.
d. Do not conduct explosive or potentially explosive operations during inclement weather.
e. Avoid contact with UXO except during UXO clearance operations.
f. Conduct UXO-related operations during daylight hours only.
g. Employ the "buddy system" at all times.

**1.4.1.2.2 Activity Hazard Analysis (AHA) Briefings**

a. Activity Hazard Analysis's shall be prepared in accordance with the Corps of Engineers Safety and Health Requirements Manual, EM 385-1-1.

b. Hazard analyses will be prepared and briefed by personnel that are knowledgeable in UXO and explosives safety standards and requirements. These personnel should understand the specific operational requirement and hazard analysis methodologies. A hazard analysis will be performed for each activity to determine the significance of any potential explosive-related hazards. Explosive residues may be discovered or exposed during UXO operations in the form of powder or various granular and powder based pellets. These contaminants can enter the body through the skin or by ingestion if proper personal hygiene practices are not followed. Explosive fillers such as white phosphorus are dangerously reactive in air and acute exposure can result in serious injury to the skin, eyes, and mucous membranes. They are also a fire hazard.

Safety requirements (or alternatives) that will either eliminate the identified hazards, mitigate or control them to reduce the associated risks to an acceptable level will be developed. The adequacy of the operational and support procedures that will be implemented to eliminate, control, or abate identified hazards or risks will then be evaluated and a second risk assessment completed to verify that a satisfactory safety level has been achieved.

**1.4.1.3 Notification of Noncompliance**

The Contracting Officer will notify the Contractor of any detected noncompliance with the foregoing requirements. The Contractor shall take immediate corrective action after receipt of such notice. Such notice, when delivered to the Contractor at the work site, shall be deemed sufficient for the purpose of notification. If the Contractor fails or refuses to comply promptly, the Contracting Officer may issue an order stopping all or part of the work until satisfactory corrective action has been taken. The Contractor shall make no part of the time lost due to such stop orders the subject of claim for extension of time or for excess costs or damages.

## 1.5 LIMITATION OF WORKING SPACE

The Contractor shall, except where required for service connections or other special reasons, confine his operations strictly within the boundaries of the site. Workmen will not be permitted to trespass on adjoining property. Any operations or use of space outside the boundaries of the site shall be by arrangement with all interested parties. It must be emphasized that the Contractor must take all practical steps to prevent his workmen from entering adjoining property and in the event of trespass occurring the Contractor will be held entirely responsible.

Areas located immediately outside the construction area are known to contain mines and unexploded ordnance (UXO). Contractors assume all risks when venturing in or out of the designated work area.

## 1.6 TEMPORARY STRUCTURES

The Contractor shall erect suitable temporary fences, lighting, and necessary structures to safeguard the site, materials and plant against damage or theft and for the protection of the general public and shall adequately maintain the same throughout the course of the contract.

## 1.7 SUBCONTRACTORS

Compliance with the provisions of this section by subcontractors will be the responsibility of the contractor.

## 1.8 LIST OF CODES AND TECHNICAL CRITERIA

The following codes and technical criteria and those referenced therein shall be required for this project. References within each reference below shall be required and adhered to. This list is not exhaustive and is not necessarily complete.

American Water Works Association, ANSI/AWWA C651-99 standard
Army TM 5-853-1, Security Engineering, vols. 1 through 4, 12 May 1994
ASCE 7-02, Minimum Design Loads for Buildings and Other Structures, 2002
ASTM - American Society for Testing and Materials
AWS - American Welding Society
EIA ANSI/TIA/EIA-607: (1994) Commercial Building Grounding/Bonding Requirement Standard.
Factory Mutual (FM) Approval Guide-Fire Protection (2002).
IBC - International Building Code (and its referenced codes including those inset below)
    IPC – International Plumbing Code
Lighting Handbook, IESNA, latest edition
Codes and Standards of the National Fire Protection Association (NFPA)
[as applicable and enacted in 2003, unless otherwise noted].
NFPA 10, Portable Fire Extinguishers, 2002 edition
NFPA 70, National Electrical Code, 2005 edition
International Mine Action Standards, latest edition; see http://www.mineactionstandards.org for copy of standards.
UFC 1-200-01, Design: General Building Requirements, 31 July 2002
UFC 3-240-03, Operation and Maintenance: Wastewater Treatment System Augmenting Handbook
Underwriters' Laboratories (UL) Fire Protection Equipment Directory (2002).

The publications to be taken into consideration shall be those of the most recent editions. Standards other than those mentioned above may be accepted if the standards chosen are internationally recognized and meet the minimum requirements of the specified standards. The Contractor shall be prepared to submit proof of this if requested by the Contracting Officer.

# 2. SITE DEVELOPMENT

The project includes furnishing all materials, equipment and labor for constructing water, sanitary sewer and storm sewer systems, as applicable. Work also includes, but is not limited to, geotechnical and topographic surveys, site clearing and grading , demolition, installation of roads and sidewalks, perimeter wall and gates, entry control points, and other facilities as described in Section 01010.

## 2.1 GEOTECHNICAL, FOUNDATIONS AND SURVEY

### 2.1.1 General

The foundations shall be constructed using reinforced concrete materials as shown on the drawings and stated in the specifications. A bearing capacity of 0.75 kg/sq. cm was assumed and used in designing the building foundations; see foundation plans and paragraph 5, STRUCTURAL. The contractor is responsible for performing a geotechnical investigation to determining if the assumed bearing capacity and foundations as shown and designed will perform satisfactory. The maximum allowable settlement between footings shall be less than 2.5 cm. If the contractor determines, after completing his geotechnical investigation, that the foundations as designed will not perform satisfactory, the contractor shall redesign the foundations accordingly. The contractor is responsible for the design and construction of the foundations.

### 2.1.2 Geotechnical Investigation

The contractor shall perform a site specific geotechnical investigation to verify the foundations, pavements, material, earthwork and any other geotechnically related items shown on the contract drawings and specifications will perform satisfactory. The contractor shall determine all necessary geotechnical conditions by appropriate field and laboratory testing and analyses.

### 2.1.3 Geotechnical Qualifications

A geotechnical engineer or geotechnical firm responsible to the contractor shall develop all geotechnical engineering design parameters. The geotechnical engineer or geotechnical firm shall be qualified by: education in geotechnical engineering; professional registration; and a minimum of ten (10) years of experience in geotechnical engineering design.

### 2.1.4 Design Certification

The contractor shall certify in writing that the design of the project has been developed consistent with the site-specific geotechnical conditions. The certification shall be stamped by the geotechnical engineer of the geotechnical firm and shall be submitted with the final design.

### 2.1.5 Survey and Mapping

2.1.5.1 General Work to be performed - Conduct topographic survey, mapping and documentation of the project site to include surface physical features, buildings, existing utilities, hydrological, geological, botanical or other physical conditions that could impact design. Topographic survey data shall include horizontal and vertical (H&V) controls. The limits of the survey shall be 10 meter outside of the anticipated construction area and 15 meter wide along utility lines to be replaced.

2.1.5.2 For Horizontal and Vertical Control, the surveyor shall use established monuments, if available. If monuments have been destroyed or do not exist, the mapping shall be based on WGS84 geodetic system and converted to UTM coordinates. All site plans and master plans shall be drawn in the following projection and datum for incorporation into the U.S. Army Corps of Engineers GIS system: WGS 1984 UTM Zone 42 N. The horizontal and vertical control established on site shall be a closed loop with third order accuracy and procedures.

2.1.5.3 All of the existing control points used at the site shall be plotted at the appropriate coordinate point and shall be identified by name or number, and adjusted elevations.

## 2.2 ENVIRONMENTAL PROTECTION

### 2.2.1 Applicable Regulations

The Contractor shall comply with all Afghani laws, rules, regulations or standards concerning environmental pollution control and abatement with regard to discharge of liquid waste into natural streams or manmade channels. The contractor shall review local environmental regulations with the contracting officer prior to design and discharge of any liquid wastes into natural streams or manmade channels.

### 2.2.2 Notification

The Contracting Officer will notify the Contractor in writing of any observed non-compliance with the foregoing provisions. The Contractor shall immediately take corrective action. If the Contractor fails or refuses to promptly take corrective action, the Contracting Officer may issue an order stopping all or part of the work until satisfactory corrective action has been taken. No extension of time or damages will be awarded to the Contractor unless it was later determined that the Contractor was in compliance.

### 2.2.3 Spillages

Measures shall be taken to prevent chemicals, fuels, oils, greases, bituminous materials, waste washings, herbicides and insecticides, and construction materials from polluting the construction site and surrounding area.

### 2.2.4 Disposal

Disposal of any materials, wastes, effluents, trash, garbage, oil, grease, chemicals, etc., shall be taken to a dumpsite off site and subject to the approval of the Contracting Officer. Burning at the project site for the disposal of refuse and debris will not be permitted.

## 2.3 CIVIL SITE DEVELOPMENT

### 2.3.1 Site Plan

The contractor shall locate the facilities in general agreement with the drawings included and any requirements in these technical specifications.. All buildings, roads, parking areas, entry control points, guard towers, fence, utility structures, and other site features shall be clearly defined and dimensioned on the site plan. Buildings shall be located to provide access for emergency vehicles and fire fighting. Roads and parking areas shall be designed for turning radius of the largest vehicle entering the compound.

### 2.3.2 Demolition

Demolition shall include removal of all structures, foundations, pavements, and utilities, and clearing and grubbing. All refuse and debris shall be disposed of off site. Holes and depressions shall be backfilled. Fill materials shall be composed of satisfactory soils or aggregates defined in ASTM D 2487 as GW, GP, GM, SP, SM, SW, CL-ML. Minimum soil compaction shall be 95 percent of maximum density as defined in ASTM D 1557.

### 2.3.3 Grading and Drainage

The contractor will provide all necessary site grading to insure adequate drainage so that no buildings or pavements will be flooded due to a rainfall of a 10-year frequency. Drainage of the area should be compatible with the existing terrain. Building floor elevations shall be a minimum 150 mm above finish grade. Finished grades shall slope away

from the building on all sides at a minimum of 2%.

**2.3.4 Paving**

**2.3.4.1 Roads**

Contractor shall construct roads and parking areas using aggregate surface. Subgrade shall be a minimum of 150mm (6 inches) minimum in depth scarified and compacted to 95% proctor density. Aggregate surfacing shall be a minimum of 150mm (6 inches). If geotechnical report indicates that thicker pavement sections are required then the Contractor shall adjust thicknesses accordingly. Aggregate surfacing material must be well graded, durable aggregate uniformly moistened and mechanically stabilized by compaction. Degree of compaction shall be expressed as a percentage of the maximum density obtained by the test procedure presented in ASTM D 1557or equivalent DIN, BS, or EN standards.

**2.3.4.2 Bridges and Site Grading Plan**

The Contractor shall notify the Contracting Officer immediately if initial site survey determines that area hydrology requires major drainage structures or bridges. The contractor shall design a site grading plan that provides positive drainage and minimizes the requirement for major structures in a cost effective manner. Drainage shall be designed for a 10 year storm frequency.

**2.3.4.3 Sidewalks**

Sidewalks shall be provided to connect parking areas with buildings and adjoining buildings where foot traffic is anticipated. Sidewalks shall be constructed with aggregate surfacing. Aggregate surfacing shall be 100mm (4 inches). Aggregate surfacing material must be well graded, durable aggregate uniformly moistened and mechanically stabilized by compaction.

**2.3.5 Masonry/Stone Compound Walls**

**2.3.5.1 Exterior Compound Wall**

Construct perimeter walls where indicated on the site plan from masonry or native stone when available, as shown on drawing details. Install outriggers and single-strand concertina wire on top of the wall. The walls shall measure at least 2.4 m high with a thickness of the walls not less than 0.60 m.

**2.3.5.2 Gates**

The gates shall be swing type. Hinged gates shall be a pair of 3.65 m wide x 2.4 m high leafs, constructed of a steel tube frame and steel tube intermediate posts and rails. The design of the gates shall insure that it is dimensionally stable, square, true and planar. Gate leafs shall not rack or deflect when install on its hinges. Gates shall have a sufficient number of hinges, anchor mounted to the exterior masonry walls, to support each gate leaf. Provide a locking mechanism that holds the gates together when in the closed position as well as a drop bolt that engages a steel sleeve embedded in the pavement.

**2.3.5.3 Reinforced Barbed Tape**

Reinforced barbed tape shall be 600 mm diameter concertina style coil consisting of 31 loops. Each loop shall consist of 19 barb clusters per loop. Adjacent coils loops shall be alternately clipped together at three points about the circumference to produce the concertina effect upon deployment. Spacing between attachments points when deployed shall be 400 mm. The reinforced barbed tape shall be fabricated from 430 series stainless steel with

hardness range of Rockwell (30N) 37-45 conforming to the requirements of ASTM A 176. Each barb shall be a minimum of 30.5 mm (1.2 inch) in length, in groups of 4, spaced on 102 mm (4 inch) centers. The stainless steel core wire shall have a 2.5 mm (0.098 inch) diameter with a minimum tensile strength of 895 MPa. Sixteen gauge stainless steel twistable wire ties shall be used for attaching the barbed tape to the barbed wire. The reinforced barbed tape shall be equivalent to NSN: 5660-01-457-9852.

**2.3.5.4 Outriggers**

Outrigger supporting arms shall be "Y" shaped with post securely embedded into the top of the wall. Posts shall conform to ASTM F 1083, Pipe, Steel, Hot Dipped Zinc Coated (Galvanized) Welded.

**2.3.5.5 Vehicle Barriers**

**2.3.5.5.1 Active Barriers**

Active barriers shall be tire shredder type with manual latch down capability. Shredders shall extend the entire width of the roadway opening where installed.

**2.3.5.5.2 Drop Arm Gates**

The height of the beam shall be a minimum of 30 inches above finished grade. The crash beam must be capable of blocking a minimum road width of 4.0 meters. The crash beam shall be manually raised and lowered with less than 60 pounds of force. The end of the crash beam should include a locking pin with padlock acceptance for securing the beam when it is in the down position.

**2.3.5.5.3 Passive Barrier**s

Barriers shall be concrete blocks of one meter by one meter by one meter dimensions. Similar arrangements of large stones (one cubic meter size), concrete filled 55-gal drums or equal sized obstacles may be used.

**2.3.6 Civil Utilities**

**2.3.6.1 General**

The design of the water and sanitary systems shall be sized to provide flow and discharge based on a fixture unit basis. The design drawings shall show all utility lines, line sizes, valves, manholes, disinfection systems, and applicable details associated with water and sanitary system designs. Specifications covering water lines, valves, pumps, controls, sanitary sewers and storm sewers shall be submitted as part of the design and shall require standard materials that are available in-country. Contractor shall install and connect exterior sanitary sewer collection and water supply piping to service connection points of each facility.

**2.3.6.2 Water Supply and Distribution**

a. General: Construct a water supply system for the compound, to include all facilities, in accordance with the contract documentation. Construction shall include development of a ground well water source; provide water well pump(s) and service booster pumps, chlorination and water storage tank(s). Storage tank(s) on the roof of the Headquarters building shall be used to provide sufficient water pressure. Should sufficient pressure not be achieved, then pumps will have to be provided. Tank capacity shall be at least 3,000 gallons (1 day at a use of 50 gal per person per day). The tank shall be installed on the roof of the headquarters building as indicated on the drawings.

The Contractor shall install water distribution mains, branches, laterals, lines and service connections to include all pipe, valves, fittings and appurtenances. Exterior water line construction shall include service to all buildings as described in the scope of Work. The required Average Daily Demand (ADD) is 50 gallons per capita per day (gpcd). Provide one outside water tap per building for landscaping purposes. All new water wells shall be located inside the compound.

b. Water well(s): The contractor shall construct water well(s) inside the compound, to provide sufficient supply for the facility. If unavailable within the compound, Contractor shall notify the COR for resolution. Off site water wells then may become a possibility. Unless noted elsewhere, wells shall be capable of supplying one day demand with 16 hours of pumping time. Well construction shall be in accordance with AWWA A100 Water Wells.

c. The following is a list of tasks required in the well drilling:

- Drilling to a depth of 20 meters below the water table with power auger or drill.

- Casing, sealing, and wellhead construction per Specifications below.

- Installing pump, power source and associated suction and discharge piping per Specifications below.

- Testing per Specifications below.

* Well installation - Well shall be drilled or augured to a minimum depth of 20 meters below the existing water table. Refer to contract documentation (drawings and technical provisions) for installation of well and pump.

* Casing - In unconsolidated material, casing shall be extended to the top of the well screen. In rock formations (drilled wells) the hole may be left open with casing extended 3 meters into the rock formation. All wells will be cased 0.5 m above grade (i.e., base of pit, ground surface, etc.) and be fitted with a lockable cap with air gap (vacuum relief during pumping). Each section of casing will be joined with standard couplings and full-threaded joints, or by proper welding, so that all joints are sound and watertight. Well casing alignment shall not interfere with the proper installation and operation of the pump. The bottom of the casing will be fitted with a metal or PVC well screen that will permit maximum transmission of water without clogging. The minimum length of screen shall be at least 3 meters. A base plate with reverse ball valve (check valve) will be placed at the base of the screen. A watertight Pump suction pipe, 10 inch, will be placed inside the casing, with a submerged piston pump cylinder at the base of the pipe. The piston pump cylinder will be no more than 1.5 m from the base of excavation. The pump suction pipe will have a weep hole in pipe 2.0 meters below grade. Casing size shall be 100mm to 200mm in inside diameter. Casing material shall be Schedule 40 steel, Schedule 40 PVC, or equivalent material.

* Sealing - The drilling process will create a hole (borehole) larger than the casing. The entire space between the casing and the edge of the borehole will be filled with either gravel, overburden, or concrete as follows:

a. The upper 3 meters of the well bore will be sealed with cement grout. Grout shall be placed in one continuous mass and be impermeable.

b. The space around the well screen will be filled with crushed stone or gravel (gravel pack). Average gravel particle size will be approximately 1 centimeter in diameter.

c. The space between the top of the gravel pack and the base of the grout seal may be backfilled with overburden or other clean earth material.

* Disinfection - Disinfection of the source will be provided in accordance with locally accepted methods and standards. At a minimum the source will be developed until all suspended material associated with drilling have been removed.

* Source protection - Surface drainage within 30m of wellhead will ensure no ponding, flooding or collection of runoff adjacent to the well. This can be accomplished through surface grading or use of gravel drains to modify site drainage in the vicinity of the well. Contractor will identify all sources of contamination and ensure the proposed well site meets minimum standoff distances as indicated below:

a. Sewage storage areas (outhouses, tanks, individual sewage pits) - 30m
b. Septic fields (infiltration galleries) - 30m
c. Animal pens and yards - 60m
d. Fuel storage, engine maintenance/repair - 30m

* Pumps - A standard hand pump will be attached to well with approved seal and air gap with concrete pad around it.

* Crushed stone for well sealing - Shall consist of crushed stone containing angular shapes and surfaces with no rounded surfaces with the following gradation:

| Sieve Size | % Total Wt. Passing |
|---|---|
| 12.5 mm | 100 |
| 4.75 mm | 75 +/- 13 |
| 1.18 mm | 25 +/- 15 |
| 75 um | 8 +/- 4 |

All aggregate shall contain less than 5% of shale, clay lumps, coal, lignite, soft or unfragmented stone, or other deleterious materials.

* Cement Grout for well sealing - Mixture shall consist of one part Portland cement to 4 parts washed sand. Water shall be mixed to produce a flowable consistency in order to fill all cracks and voids around the well casing.

* Concrete - Mixture shall consist of seven sacks per cubic meter. Each sack is 49 kg of Portland cement. The mix ratio shall be 1:2:4 (Portland cement: sand: crushed angular aggregate (12.5 mm max)).

* Quality control and testing –

a. Pump Testing: In order to ensure that the source is capable of providing the required demand capacity, the completed well shall be tested for yield and drawdown by pumping at a minimum sustained rate of 20 liters/minute for four hours duration. The well must maintain a minimum head under sustained pumping conditions of ¼ the depth of the well. (for example, for a 40m deep well, head should be maintained at 10m from the bottom of the well).

b. Water quality testing: Water will be provided from the source that is acceptable for the intended use. Sources that do not meet the requirements of the intended use will be deemed unacceptable and another source must be established at no additional cost. Water quality testing (i.e., bacteria, chemical, turbidity, etc.) will be conducted in accordance with locally accepted methods and standards.

c. Well house: At new wells, construct a permanent well house. The floor of the well house shall slope away from the casing approximately 1 cm per 100 cm (1/8” per foot). Floor of well house shall be above floodplain. The well house design should be such that the well pump, motor and drop pipe could be removed readily. The well house shall protect valves and pumping equipment plus provide freeze protection for the

pump discharge piping beyond the check valve. The well house shall be insulated. The well house shall have door locks and hatch lock on roof.
The well is to be drilled at a location recommended in writing by the contractor. The water source should be located at the highest elevation possible within the adjacent area and must be a minimum of 30meters from any septic/sanitary system. The well house shall have a 2.4 meter high chain link security fence with gate surrounding it. The fence and gate shall be topped with barbed wire and outriggers.

d. The site population is 60 personnel.

**2.3.6.3 Sanitary Sewer**

a. Construct a sanitary sewer system in accordance with the contract documentation, providing service from all buildings requiring sewage collection.. Leach fields and septic tanks are specified in the contract documentation. Leach fields and septic tanks are to be located outside the perimeter compound (see site plan). If leach field is found to be unsuitable, the Contractor shall notify the COR. Septic tank capacity shall be a minimum of 3000 gallons. Leach field shall be sized to accommodate the average daily flow of 2400 gallons per day.

b. Exterior sanitary sewer line construction includes service to all buildings requiring sewage collection. Contractor shall construct the sanitary sewer collection system using finished floor elevations. Main collection sewers will follow the most feasible route to the point of discharge. The sewer collection system shall be constructed to accommodate the facility. Construction required shall include appurtenant structures and building sewers to points of connection with Building drains 1.5m outside the building, to which the sewer collection system is to be connected.

c. The Contractor shall use the following criteria where possible to provide a layout which is practical, economical and meets hydraulic requirements:

- Follow slopes of natural topography.

- Avoid routing sewers through areas which require extensive restoration or underground demolition.

- Avoid areas of high groundwater and placement of sewer below the groundwater table.

- Locate manholes at change in direction, size or slope of gravity sewers.

- Use straight sections between manholes, curved alignment shall not be permitted.

- Avoid placing manholes where the tops will be submerged or subject to surface water inflow.

- Evaluate alternative sewer routes where applicable.

- Verify that final routing selected is the most cost effective alternative that meets service requirements.

d. Protection of water supplies - Unless noted elsewhere, the Contractor shall construct an appropriate size leach field outside the district headquarter compound; ensure that the sewer design meets the following criteria:

- Sanitary sewers will be located no closer than 15m horizontally to water wells or reservoirs to be used for potable water supply.

- Sanitary sewers will be no closer than 3m horizontally to potable water lines; where the bottom of the water pipe will be at least 305mm above the top of the sanitary sewer, horizontal spacing shall be a minimum of 1.8m.

- Sanitary sewers crossing above potable water lines shall be constructed of suitable pressure pipe or fully encased in concrete for a distance of 2.7m on each side of the crossing. Pressure pipe will be as required for force mains in accordance with local standards and shall have no joint closer than 0.9m horizontally to the crossing, unless the joint is encased in concrete.

- Sanitary sewers shall be constructed to allow flow at 90 to 95 percent full. Sanitary sewer velocities shall be designed to provide a minimum velocity of 0.6 meters per second (mps) at the ADD flow rate and a minimum velocity of 0.8 to 1.05 mps at the peak diurnal flow rate. In no case shall the velocity drop below 0.3 mps, to prevent settlement of organic solids suspended in the wastewater. Pipe slopes shall be sufficient to provide the required minimum velocities and depths of cover on the pipe. Unless otherwise indicated. Gravity sewer pipe shall be installed in straight and true runs in between manholes with constant slope and direction. Adequate cover must be provided for frost protection. A minimum cover of 80cm will be required to protect the sewer against freezing.

- The Contractor shall provide standard depth manholes (MH), that best meets the specific depth required, with an inside dimension of 1.2 meters. Manholes shall be made of cast-in-place reinforced concrete with reinforced concrete cover. The manholes, frames and covers shall be traffic rated, H-20 load rating. All manholes shall be provided with a concrete bench with a flow line trough, smoothly formed to guide waste flow to the outlet pipe from the inlet pipe(s). The top surface of the bench shall be above the crown of all pipes within the manhole. All surfaces of the bench shall be sloped smoothly toward the trough to guide flow, even under peak flow conditions.

1) Manholes are required at junctions of gravity sewers and at each change in pipe direction, size or slope, except as noted hereinafter for building connections.

2) Spacing. The distance between manholes must not exceed 120m in sewers of less than 460mm in diameter. For sewers 460mm and larger, a spacing of up to 180m is allowed provided the velocity is sufficient to prevent the settlement of solids.

**2.3.6.4 Storm Drainage System**

**2.3.6.4.1 Hydraulic Design**

New storm drain pipes, if required, shall be designed for gravity flow during the 10-year design storm unless otherwise approved by the Government. The hydraulic grade line shall be calculated for the storm drain system and all energy losses accounted for.

**2.3.6.4.2 Manholes**

Diameter of manholes shall be large enough to accommodate pipes entering/exiting the manhole. Manhole cast iron frames shall have a minimum opening diameter of 600mm.

**2.3.6.4.3 Area Inlet**s

Area inlets shall be properly sized and designed to accommodate the design flows.

**2.3.6.4.4 Head walls and Flared End Sections**

Unless otherwise approved, head walls or flared end sections shall be provided at the ends of culverts and at storm drain outfalls. Protection from erosion and scouring at head wall and flared end section outfalls shall be provided as needed.

**2.3.6.4.5 Culverts**

Culvert pipes shall have a minimum diameter of 450mm wherever possible.

**2.3.6.4.6 Storm Drain and Culvert Pipe**

The Contractor shall select the appropriate storm drain and culvert pipe materials from local sources. Pipe, bedding, and backfill shall be of adequate strength (or stiffness) to support the earth, live, and construction loads imposed on the pipe.

**2.3.7 Trash Point**

The Contractor shall place, in a location convenient for easy removal, a trash collection point. It shall be located outside the compound walls. The trash point shall be a 1.8 m X 1.8 m concrete pad with a 1.8 meter tall wooden fence about the perimeter. One side shall have a 1.2 m wide gate entrance.

**3. NOT USED**

**4. ARCHITECTURAL**

**4.1 GENERAL**

All material approved shall become standardized material to be used throughout the facilities under contract. Different sub-contractors shall not use different material or standards under the contract. Intent of the project is to use locally procured materials (unless specified otherwise) and labor to the maximum extent possible while satisfying seismic building code. Conflicts between criteria and local standards shall be brought to the attention of the Contracting Officer for resolution. In such instances, the Contractor shall furnish all available information with justification to the Contracting Officer.

**4.2 DESIGN CRITERIA**

The Codes, Standards, and Regulations listed below shall be used in the construction of this project. The publications shall be the most recent editions. Standards other than those mentioned may be accepted provided they meet the minimum requirements and the contractor shall submit proof of equivalency to the Contracting Officer for approval.

Local Building Codes
IBC- International Building Code

**4.3 EXCAVATION**

Trench excavation shall be made for concrete footings. Trenches shall be a minimum of .8 meter deep. Trenches deeper than 1.5 meters shall have protective shoring to protect workers or have the sides of the trench sloped back at a slope of 1.5:1. Care shall be taken when backfilling of foundation trenches to avoid damage to walls. Any excess dirt shall become the property of the Contractor and shall be removed from the site to a location approved by the

Contracting Officer.

**4.4 CONCRETE**

Place 10cm (4”) of capillary water barrier below areas to receive a concrete slab on properly compacted soil free of organic material. A plastic vapor barrier (10 mils thick) shall be placed over the crushed stone prior to placing of concrete slabs. Concrete flooring in wet areas shall slope to the floor drain and not allow for water to puddle. Concrete slabs in all areas shall not be placed prior to inspection and approval of piping and sub-surface by the Contracting Officer. Foundation trenches shall be level and free of loose material. Trenches shall be inspected and approved by the Contracting Officer prior to placing of any concrete foundations. See paragraph 5 for structural characteristics of concrete and reinforcing steel for foundations and slabs.

**4.5 MASONRY**

Storage of masonry materials shall be in a dry place or materials shall be covered with a plastic protective layer. Cover open walls each day to keep them protected and dry. Concrete masonry units (CMU) shall be 200mm wide x 400mm x 200mm high as shown on drawings. They shall be installed in running bond level and plumb. Mortar joints shall be 9mm on all sides between CMU. Joints shall be struck with a concave tool to provide a smooth recessed curved surface. Install only quality units. The surface shall be free of chips, cracks, or other imperfections that would detract from the overall appearance of the finished wall. Defective CMU or mortar shall be rejected. CMU shall conform to ASTM C 90. For other requirements, see paragraph 5 “Structural.”

**4.6 METAL**

**4.6.1 Metal Window Sills**

Aluminum window sills shall be installed on the exterior of all windows. The metal window sills shall have a turn down of 5cm over the exterior masonry and stucco. Metal sills shall extend from side to side of the masonry opening in a single piece. Extend the metal windowsill a minimum of 2 cm under the bottom of the aluminum windows. Install masonry mortar as required for a smooth surface under the window sills. Sills shall slope a minimum of 6mm to the exterior and not allow water to puddle. Sealants shall be applied between joints of two (2) different materials.

**4.6.2 Steel Cook Top**

Provide steel cook top in kitchen minimum thickness of 1cm. Provide circular cut outs. Consult with the Contracting Officer for the diameter of circular cutouts. Provide steel infill plates for all cut out openings. Cook top can be made of several pieces for ease of handling. Adjacent plates shall be tight fitting to each other.

**4.6.3 Pass-Through Counter Top**

Provide 1.6mm (16 gauge) stainless steel, or 4cm marble, pass through counter tops at openings between the kitchen and dining area. Edges shall be turned down 3 cm and corners shall be welded and ground smooth. Provide anchor angles welded to the bottom of the counters to anchor tops to masonry walls below. Provide eight (8) anchors on the Serving Counter, four (4) on each side of the wall. Anchor angles to wall with masonry expansion sleeves and stainless steel screws. Counter tops are to be 60cm wide x length of opening shown.

**4.6.4 Pipe Guards for Roll-Up Doors**

Pipe guards shall be heavy duty steel pipe conforming to ASTM A 53/A 53M, Type E or S, weight STD, black finish.

**4.6.5 Mirror Frames**

Frames for plate glass mirrors larger than 450 by 750 mm shall be fabricated from extruded aluminum with anodized finish. Frames shall be provided with concealed fittings and tamperproof mountings.

**4.6.6 Trench Covers and Frames**

Trench covers shall be designed to meet the indicated load requirements. Trench frames and anchors shall be all welded steel construction designed to match cover. Covers shall have flush drop handles formed of 6 mm round stock, and shall be steel floor plate. Grating opening widths shall not exceed 25 mm.

**4.6.7 SUNSHADES (POWER GENERATORS AND GAS BOTTLE STORAGE)**

Provide a 6m x 12m and a 1.8m x 3m reinforced concrete pads and metal sunshades for power generators and switch gears, and gas bottle storage respectively. Proposed sizes shall be approved by Contracting Officer. Reinforced concrete pads shall have thickened slabs around the perimeters of the slabs. Capillary water barriers shall be provided under the slabs. Sunshade framing members shall conform to ASTM A 653A/A 653M and ASTM A 36/A 36M. Sheet metal for roofing shall conform to ASTM A 153/A 153M, ASTM A 653A/A 653M and ASTM A 1008/A 1008M. Design calculations for the sunshade structures and fabrication drawings shall be submitted for approval. Roofing panels, fascia shall not be less than 26 gauge (0.55mm) before coating. Roof finish shall be two (2) coats of baked enamel coating or silicone polyester coating consisting of an epoxy primer and a finish coat of silicone polyester or approved equal. Coating shall be applied to the outside of the panels. Inside shall be primed. Gutters and downspouts shall be either aluminum (0.81 mm thick minimum) or zinc coated (galvanized). Colors shall be from manufacturer's standard color chart and approved by the Contracting Officer.

**4.7 CARPENTRY**

**4.7.1 Retrofit Roof Wood Trusses for Police Headquarters**

Submit calculations and drawings for retrofit roof wood trusses. See drawing details for roofing construction.

**4.7.2 Lumber**

Mark each piece of framing and board lumber or each bundle of small pieces of lumber with the grade mark and the species. Distinguish structural, framing, and board lumbers.

**4.7.3 Preservative-Treated Lumber**

The Contractor shall be responsible for the quality of treated wood products and be inspected in accordance with AWPA M2. Treated lumber shall be marked in accordance with AWPA M6. Treated lumber shall be in compliance with applicable AWPA treatment standards.

**4.7.4 Preservative Treatment**

Treat wood products with waterborne wood preservatives conforming to AWPA P5. Pressure treatment of wood products shall conform to the requirements of AWPA U1 and AWPA T1. Pressure-treated wood products shall not contain arsenic, chromium, or other agents classified as carcinogenic, probably carcinogenic, or possibly carcinogenic to humans. All lumber and wood work for ground contact, contact with masonry and concrete, and for underground uses, together with the following items, shall be preservative treated:

a. Wood framing, woodwork, up to the bottoms of such items are 600 mm (24 inches) or less from the earth underneath.

b. Exterior wood steps, platforms, and railings; and all wood framing of open, roofed structures.

c. Nailers, edge strips, crickets, curbs, and cants for roof decks.

**4.7.5 Data Required**

Submit calculations and drawings for all proposed structural members. Do not proceed with modifications until the submittal has been approved.

**4.7.6 Natural Decay- and Insect-Resistant Wood**

Natural decay-resistant and insect-resistant wood can be an alternative to treated wood.

**4.7.7 Structural Lumber**

Except where a specific grade is indicated or specified, any of the species and grades shall have allowable unit stresses in kPa per code requirements. Use for joists, rafters, headers, trusses, beams, columns, posts, stair stringers, girders, and all other members shall be stress rated. Design of members and fastenings shall conform to AITC OT-01.

**4.7.8 Framing Lumber and Board Lumber**

Framing lumber such as studs, plates, caps, collar beams, cant strips, bucks, sleepers, nailing strips, and nailers, and board lumber such as subflooring and wall and roof sheathing shall be the species and grades per WWPA G-5.

**4.7.9 Hardware**

Unless otherwise indicated or specified, rough hardware shall be of the type and size necessary for the project requirements. Sizes, types, and spacing of fastenings of manufactured building materials shall be as recommended by the product manufacturer unless otherwise indicated or specified. Hardware exposed to the weather or embedded in or in contact with preservative treated wood, exterior masonry, or concrete walls or slabs shall be zinc-coated.

**4.7.9.1 Bolts, Nuts, Studs, and Rivets**

ANSI B18.2.1, ANSI B18.5.2.1M, ASME B18.5.2.2M, ASME B18.2.2, and ASTM A 687.

**4.7.9.2 Anchor Bolts**

ASTM A 307, size as indicated, complete with nuts and washers.

**4.7.9.3 Lag Screws and Lag Bolts**

ANSI B18.2.1.

**4.7.9.4 Nails**

Nails shall be the size and type best suited for the purpose and shall conform to ASTM F 547. Nails shall be hot-dip galvanized or aluminum when used on exterior work.

**4.7.10 Trim, Finish, and Frames**

Provide species and grades listed for materials to be paint finished. Provide materials that are to be stain, natural, or transparent finished one grade higher than that listed. Provide species indicated for materials to be transparent finished.

**4.7.11 Stairs**

Treads shall have 32 mm (1-1/4 inches) thickness minimum. Shop drawings of exterior stair construction for guard towers shall be submitted for approval.

**4.7.12 Wood Fascia & Soffit**

As shown on guard tower drawings, provide and install fascia and soffit boards. Wood boards shall be planed and smooth ready for paint finish. Soffit shall extend out from exterior wall surface. Extend fascia board down past bottom of soffit a minimum of 6mm for water drip. Extend roof decking out over fascia a minimum of 2cm. Provide a 4cm drip flashing over edge of roof decking so that it extends past bottom of decking on all sides of the building. Provide continuous soffit venting of all overhangs at both bottom and top of roof slope.

**4.7.13 Wood Battens**

If Contractor chooses to utilize wood ceiling batten strips, wood ceiling batten strips, 2cm x 6cm, shall be fastened to the bottom of the concrete slabs. Battens shall be spaced at 40cm on center. This is for the support of plaster ceiling of the Headquarter Building.

**4.8 ROOFING AND WEATHERPROOFING**

**4.8.1 Sloped Roofs**

On sloping roofs provide and install .70mm (24 gauge) galvanized steel in either corrugated or standing seam design. Metal roofing shall be anchored to wood deck sub-surface using exposed fasteners at 30cm on center at all seams and at 60cm on center in the panel field. Fasteners shall be placed at the top of the corrugation taking care not to dent panel. Roof sealant or adhesive shall be placed over each anchor head. Roofing system shall include all edge, ridge and penetration flashings necessary for a watertight installation. Roofing shall be galvanized mil finish. Panels shall be overlapped two corrugations side to side and be continuous sheets from ridge to eave. Provide continuous ridge vents on all gable roofs.

**4.8.2 Flat Roofs**

Provide and install 3 ply built up roofing over concrete deck. Contractor may propose to the Contracting Officer an alternate roofing system with justification for consideration and alternate pricing. Concrete roof deck shall slope 21mm per m.

**4.8.2.1 Built-up Roofing System**

A Concrete-Deck, Coal Tar, Glass-Fiber, Aggregate Roofing (ICGA-BUR): Provide built-up, aggregate-surfaced roof system with coal tar bitumen and glass-fiber ply felts (roof manufacturer's separation layers) for layup as indicated.

1. Primer: ASTM D 41primer as recommended by roofing manufacturer.

2. Coal Tar Bitumen: ASTM D 450, Type III, as an option to asphalt.

3. Bitumen Membrane which meets the following:
   a. ASTM D312 or the equivalent EN 1849-1 for thickness and unit weight,
   b. ASTM D312 or the equivalent EN-1426 for penetration,
   c. ASTM D312 or the equivalent EN-1427 for softening point
   d. ASTM D312 or the equivalent TS 11758-1 for flash point or heat stability
   e. ASTM D4601 or the equivalent TS 11758-1 for width and area of roll

f. ASTM D4601 (moisture percentage) or the equivalent EN 1928 (water tightness)
g. ASTM D226 (pliability) or the equivalent EN 1109 (cold bending).

4. Glass Roofing Felt: ASTM D 2178, Type IV or VI, except felts for coal tar systems shall be impregnated with a bituminous resin coating which is compatible with coal tar bitumen.

5. Organic Felt Base: ASTM D 2626 for use with asphalt roofing system.

6. Organic Felt Base: ASTM D 226 for use with asphalt roofing system and ASTM D 227 for use with coal tar roofing system. Organic felts may be used for bitumen stops and edge envelopes.

**4.8.2.2 Roof Membrane Installation (Modified Bituminous Membrane Roofing)**

A. Prime surface of concrete deck with asphalt primer per manufacturers recommended application rate.

B. Cant Strips/Tapered-Edge Strips: Wood, not less than 89mm (3-1/2 inches) high, 45-degree cant strips at juncture of membrane with vertical surface.

C. Base Layer: Install one lapped course of base sheet. Attach first layer of roofing membrane material to substrates and elsewhere as indicated. Mop to non-nailable substrate with hot bitumen or apply with torch method per manufacturer's specifications

D. Second Layer: Install second layer of roofing membrane material over the first course staggering joints and seams in both directions by at least 300mm. Mop top layer of membrane to base layer, or attach via torch method per manufacturer's specifications.

**4.8.2.3 Composition Flashing**

A. Install composition flashing at cant strips, at other sloping and vertical surfaces, at roof edges, and at penetrations through roof. Install composition flashing in accordance with membrane manufacturers specifications. Nail or provide other forms of mechanical anchorage of composition flashing to vertical surfaces as recommended by manufacturer of primary roofing materials. Metal base flashing shall be set in plastic bituminous cement over the roofing membrane, nailed to nailing strip, and secured in place on the roof side with nails spaced not more than 75 mm on centers. Metal base flashing shall not be used on built-up roofing. Counter flashings shall be provided over base flashings. Counter flashing shall be installed as shown on the drawings. Where bituminous base flashings are provided, the counter flashing shall extend down as close as practicable to the top of the cant strip . Counter flashing shall be formed to provide spring action against the base flashing.

B. Flashings: Base flashings, counterflashings, cap flashings, control joints and similar work to be coordinated with built-up roofing work, are specified in other paragraphs of these specifications.

C. Roof Accessories: Miscellaneous sheet metal accessory items, including insulation vents and other devices and major items of roof accessories to be coordinated with built-up roofing work.

**4.8.2.4 Gravel Layer**

A gravel layer of 16 to 32mm diameter stone will be laid in at least 5cm thick on top of the filter layer in non-trafficable flat roofs The gravel layer will be applied as soon as possible to prevent UV damage and/or wind damage to insulation and filter layers

**4.8.3 Sheet Metal**

**4.8.3.1 Materials**

Any metal listed by ASTM, DIN, BS or EN standards. Manual for a particular item may be used, unless otherwise specified or indicated. Materials shall conform to the requirements specified below and to the thicknesses and configurations established in ASTM, DIN, BS or EN standards. Different items need not be of the same metal, except that if copper is selected for any exposed item, all exposed items shall be copper.

**4.8.3.2 Steel Sheet, Zinc-Coated (Galvanized)**

Zinc coated steel conforming to ASTM A 525, DIN BS or EN Standards.

**4.8.3.3 Aluminum Wall Capping**

Aluminum wall capping conforming to ASTM B 209 M , DIN 18339, BS or EN Standards.

**4.8.3.4 Scuppers and Downspouts**

Scuppers and downspouts shall be installed as indicated. Downspouts shall be rigidly attached to the building. Supports for downspouts shall be spaced according to manufacturer's recommendations. Downspouts shall be designed and fabricated on site. Unless otherwise specified or indicated, exposed edges shall be folded back to form a 13 mm (1/2 inch) hem on the concealed side, and bottom edges of exposed vertical surfaces shall be angled to form drips. Bituminous cement shall not be placed in contact with roofing membranes other than built-up roofing.

**4.8.3.5 Wall, Floor, and Ceiling Control Joints Over Plaster and Stucco**

Control joints shall be provided as specified in ASTM, DIN, BS or EN Standards.

**4.8.3.6 Connections and Jointing**

**4.8.3.6.1 Soldering**

Soldering shall apply to copper, and stainless steel items. Edges of sheet metal shall be pre-tinned before soldering is begun. Soldering shall be done slowly with well heated soldering irons so as to thoroughly heat the seams and completely sweat the solder through the full width of the seam. Edges of stainless steel to be pre-tinned shall be treated with soldering acid flux. Soldering shall follow immediately after application of the flux. Upon completion of soldering, the acid flux residue shall be thoroughly cleaned from the sheet metal with a water solution of washing soda and rinsed with clean water.

**4.8.3.6.2 Seaming**

Flat-lock and soldered-lap seams shall finish not less than 25 mm. wide. Unsoldered plain-lap seams shall lap not less than 75 mm. unless otherwise specified. Flat seams shall be made in the direction of the flow.

**4.8.3.7 Cleats**

A continuous cleat shall be provided where indicated or specified to secure loose edges of the sheet metalwork. Butt joints of cleats shall be spaced approximately 3 mm. apart. The cleat shall be fastened to supporting wood construction with nails evenly spaced not over 300 mm. on centers. Where the fastening is to be made to concrete or masonry, screws shall be used and shall be driven in expansion shields set in concrete or masonry.

**4.8.3.8 Lintel Flashing**

Lintel flashing shall extend the full length of lintel. Flashing shall extend through the wall one masonry course above the lintels and shall be bent down over the vertical leg of the outer steel lintel angle not less than 50 mm, or shall be applied over top of masonry and pre-cast concrete lintels. Bed joints of lintels at joints shall be under laid with sheet metal bond breaker.

**4.8.3.9 Sill Flashing**

Sill flashing shall extend the full width of the sill and not less than 100 mm beyond ends of sill except at joint where the flashing shall be terminated at the end of the sill.

**4.8.3.10 Wall Capping**

Wall Capping shall be installed according to the manufacturer's recommendations.

**4.8.4 Sealants**

**4.8.4.1 Interior Sealant**

ASTM C 834 or ASTM C 920, Type S or M, Grade NS, Class 12.5, Use NT, DIN, BS, or EN equal standards.

**4.8.4.2 Exterior Sealant**

For joints in vertical and horizontal surfaces, provide ASTM C 920, Type S or M, Grade NS, DIN, BS, or EN equal standards.

**4.8.4.3. Floor Joint Sealant**

(ASTM C 920) Type S or M, Grade P, class 25, use T

**4.8.4.4 Primers**

Provide a non-staining, quick-drying type and consistency recommended by the sealant manufacturer for the particular application.

**4.8.4.5 Bond Breakers**

Provide the type and consistency recommended by the sealant manufacturer to prevent adhesion of the sealant to backing or to bottom of the joint.

**4.8.4.6 Backstops**

Backing shall be 25 to 33 percent oversize for closed cell and 40 to 50 percent oversize for open cell material, unless otherwise indicated.

**4.8.4.7 Cleaning Solvents**

Provide type(s) recommended by the sealant manufacturer except for aluminum and bronze surfaces that will be in contact with sealant.

**4.8.4.8 Surface Preparation**

Surfaces shall be clean, dry to the touch, and free from dirt frost, moisture, grease, oil, wax, lacquer, paint, or other foreign matter that would tend to destroy or impair adhesion. Oil and grease shall be removed with solvent and surfaces shall be wiped dry with clean cloths. When resealing an existing joint, remove existing calk or sealant prior to applying new sealant. For surface types not listed below, the sealant manufacturer shall be contacted for specific recommendations.

**4.8.4.9 Masking Tape**

Masking tape shall be placed on the finish surface on one or both sides of a joint cavity to protect adjacent finish surfaces from primer or sealant smears. Masking tape shall be removed within 10 minutes after joint has been filled and tooled.

**4.8.4.10 Backstops**

Install backstops dry and free of tears or holes. Tightly pack the back or bottom of joint cavities with backstop material to provide a joint of the depth specified.

**4.8.4.11 Primer**

Immediately prior to application of the sealant, clean out loose particles from joints. Where recommended by sealant manufacturer, apply primer to joints in concrete masonry units, wood, and other porous surfaces in accordance with sealant manufacturer's instructions. Do not apply primer to exposed finish surfaces.

**4.8.4.12 Bond Breaker**

Provide bond breakers to the back or bottom of joint cavities, as recommended by the sealant manufacturer for each type of joint and sealant used, to prevent sealant from adhering to these surfaces. Carefully apply the bond breaker to avoid contamination of adjoining surfaces or breaking bond with surfaces other than those covered by the bond breaker.

**4.8.4.13 Sealants**

Provide a sealant compatible with the material(s) to which it is applied. Do not use a sealant that has exceeded shelf life or has jelled and can not be discharged in a continuous flow from the gun. Apply the sealant in accordance with the manufacturer's instructions with a gun having a nozzle that fits the joint width. Force sealant into joints to fill the joints solidly without air pockets. Tool sealant after application to ensure adhesion. Sealant shall be uniformly smooth and free of wrinkles. Upon completion of sealant application, roughen partially filled or unfilled joints, apply sealant, and tool smooth as specified. Sealer shall be applied over the sealant when and as specified by the sealant manufacturer.

**4.8.4.14 Protection**

Protect areas adjacent to joints from sealant smears. Masking tape may be used for this purpose if removed 5 to 10 minutes after the joint is filled.

**4.8.4.15 Final Cleaning**

Upon completion of sealant application, remove remaining smears and stains and leave the work in a clean and neat condition.

a. Masonry and Other Porous Surfaces: Immediately scrape off fresh sealant that has been smeared on masonry and rub clean with a solvent as recommended by the sealant manufacturer. Allow excess sealant to cure for 24 hour then remove by wire brushing or sanding.

b. Metal and Other Non-Porous Surfaces: Remove excess sealant with a solvent-moistened cloth.

**4.9 WINDOWS, DOORS & GLAZING**

**4.9.1 Windows**

**4.9.1.1 Materials**

A. Aluminum Extrusions: Provide alloy and temper recommended by the window manufacturer for the strength, corrosion resistance, and application of required finish, meeting the DIN 1725 raw material requirements, but not less than 215 N/mm2 ultimate tensile strength and not less than 1.5 mm thick at any location for main frame and sash members.

B. Fasteners: Provide aluminum, nonmagnetic stainless steel, epoxy adhesive, or other materials warranted by the manufacturer to be non-corrosive and compatible with aluminum window members, trim, hardware, anchors, and other components of window units.

1. Reinforcement: Where fasteners screw-anchor into aluminum less than 0.125 inch thick, reinforce the interior with aluminum or nonmagnetic stainless steel to receive screw threads or provide standard non-corrosive pressed-in splined grommet nuts.

2. Exposed Fasteners: Except where unavoidable for application of hardware, do not use exposed fasteners. For application of hardware, use fasteners that match the finish of the member or hardware being fastened, as appropriate.

C. Anchors, Clips, and Window Accessories: Fabricate anchors, clips, and window accessories of aluminum, nonmagnetic stainless steel, or hot-dip zinc-coated steel or iron complying with the requirements of DIN 1748; provide sufficient strength to withstand design pressure indicated. As a minimum provide 3 anchors on each side of the frame.

D. Compression-Type Glazing Strips and Weatherstripping: Unless otherwise indicated, and at the manufacturer's option, provide compressible stripping for glazing and weatherstripping such as molded EPDM or neoprene gaskets.

E. Sealant: For sealants required within fabricated window units, provide type recommended by the manufacturer for joint size and movement. Sealant shall remain permanently elastic non-shrinking, and non-migrating. Comply with Sealants of these specifications for selection and installation of sealants.

F. Wire Fabric Insect Screen shall be permanently fixed to the exterior.

**4.9.1.2 Hardware**

Provide the manufacturer's standard hardware fabricated from aluminum, stainless steel, or other corrosion-resistant material compatible with aluminum and of sufficient strength to perform the function for which it is intended.

**4.9.1.3 Fixed, Casement, Projected and Sliding Windows**

Provide window units with 5 mm single glazed. Provide 5 mm plexi-glass window glazing for guard towers.

**4.9.1.4 Fabrication**

Provide aluminum windows with factory finish in all buildings to fit the masonry openings. Window openings shall be provided with insect screening permanently fixed to the exterior. Provide a locking device on the interior of each window. Provide anchors on each side of the frame into the adjoining masonry, 3 on each side. Provide weather stripping system for all exterior windows and doors.

**4.9.1.5 Finishes**

Apply baked enamel in compliance with paint manufacturer's specifications for cleaning, conversion coating, and painting.

Color: Selections by Contracting Officer

**4.9.1.6 Inspection**

Inspect openings before beginning installation. Verify that rough or masonry opening is correct and the sill plate is level. Masonry surfaces shall be visibly dry and free of excess mortar, sand, and other construction debris.

**4.9.1.7 Installation**

Comply with manufacturer's specifications and recommendations for installation of window units, hardware, operators, and other components of the work. Set window units plumb, level, and true to line, without warp or rack of frames or sash. Provide proper support and anchor securely in place. Set sill members and other members in a bed of compound or with joint fillers or
gaskets, as shown, to provide weathertight construction. Refer to the Sealant sections for compounds, fillers, and gaskets to be installed concurrently with window units. Coordinate installation with wall flashings and other components of the work.

**4.9.1.8 Adjusting**

Adjust operating sash and hardware to provide a tight fit at contact points and at weatherstripping for smooth operation and a weathertight closure.

**4.9.1.9 Cleaning**

Clean aluminum surfaces promptly after installation of windows. Exercise care to avoid damage to protective coatings and finishes. Remove excess glazing and sealant compounds, dirt, and other substances. Lubricate hardware and other moving parts.

**4.9.2 Doors**

Generally, doors shall be wood, flush wood core, sizes as shown on the drawings with wood frames to match door masonry openings. All glazed doors shall have 5mm single glazing in the upper half of the door. Heavy gauge metal exterior doors are required for buildings requiring higher security. Commercial duty lock sets and hardware shall be used on all doors. Install required louvers, as called for in paragraph 6, in the lower portion of the door. Provide 3 hinges on all doors. Provide door handles and locksets that can be locked with a key on all doors. All door locks shall have a thumb latch on inside of door such that no key is necessary to exit a building. Coordinate the final keying schedule with Contracting Officer prior to ordering lock sets. Generally each building should have 8 master keys fitting all locks, 8 sub-master keys fitting all exterior doors and 3 keys each for each interior door. Include 25% spare key blanks for the amount of keys provided per building. Provide numbering system identifying key to associated room door. All glazing in or adjacent to doors shall be tempered per IBC. Provide weather stripping system for all exterior doors. Submit shop drawings together with lock sets for approval.

**4.9.2.1 Steel Doors (Prison Rooms)**

SDI A250.8, except as specified otherwise. Prepare doors to receive specified hardware. Doors shall be as indicated. Doors shall be constructed using heavy gauge steel. See drawings for steel door details for prison rooms.

**4.9.2.1.1 Standard Steel Frames**

SDI A250.8, except as otherwise specified. Form frames to sizes and shapes indicated, with welded corners or knock-down field-assembled corners. Provide steel frames for doors, transoms, and mullions unless otherwise indicated.

**4.9.2.1.2 Welded Frames**

Continuously weld frame faces at corner joints. Mechanically interlock or continuously weld stops and rabbets. Grind welds smooth.

**4.9.2.1.3 Mullions and Transom Bars**

Mullions and transom bars shall be closed or tubular construction and shall member with heads and jambs butt-welded thereto or knock-down for field assembly. Bottom of door mullions shall have adjustable floor anchors and spreader connections.

**4.9.2.1.4 Stops and Beads**

Form stops and beads from 0.9 mm thick steel. Provide for other openings in standard steel frames. Secure beads to frames with oval-head, countersunk Phillips self-tapping sheet metal screws or concealed clips and fasteners. Space fasteners approximately 300 to 400 mm on centers. Miter molded shapes at corners. Butt or miter square or rectangular beads at corners.

**4.9.2.1.5 Anchors**

Provide anchors to secure the frame to adjoining construction. Provide steel anchors, zinc-coated or painted with rust-inhibitive paint, anchors not lighter than 1.2 mm thick.

**4.9.2.1.5.1 Wall Anchors**

Provide at least three anchors for each jamb. For frames which are more than 2285 mm in height, provide one additional anchor for each jamb for each additional 760 mm or fraction thereof.

a. Masonry: Provide anchors of corrugated or perforated steel straps or 5 mm diameter steel wire, adjustable or T-shaped;

b. Completed openings: Secure frames to previously placed concrete or masonry with expansion bolts

**4.9.2.1.5.2 Floor Anchors**

Provide floor anchors drilled for 10 mm anchor bolts at bottom of each jamb member. [Where floor fill occurs, terminate bottom of frames at the indicated finished floor levels and support by adjustable extension clips resting on and anchored to the structural slabs.]

**4.9.2.1.6 Hardware Preparation**

Provide minimum hardware reinforcing gages as specified in ANSI A250.6. Drill and tap doors and frames to receive finish hardware. Prepare doors and frames for hardware in accordance with the applicable requirements of SDI A250.8 and ANSI A250.6. For additional requirements refer to BHMA A115. Drill and tap for surface-applied hardware at the project site. Build additional reinforcing for surface-applied hardware into the door. Locate hardware in accordance with the requirements of SDI A250.8, as applicable. Punch door frames, with the exception of frames that will have weatherstripping or lightproof or soundproof gasketing, to receive a minimum of two rubber or vinyl door silencers on lock side of single doors and one silencer for each leaf at heads of double doors. Set lock strikes out to provide clearance for silencers.

**4.9.2.1.7 Finishes**

All surfaces of doors and frames shall be thoroughly cleaned, chemically treated and factory primed with a rust inhibiting coating as specified in SDI A250.8, or paintable A25 galvannealed steel without primer. Where coating is removed by welding, apply touchup of factory primer.

#### 4.9.2.1.8 Fabrication and Workmanship

Finished doors and frames shall be strong and rigid, neat in appearance, and free from defects, waves, scratches, cuts, dents, ridges, holes, warp, and buckle. Molded members shall be clean cut, straight, and true, with joints coped or mitered, well formed, and in true alignment. Dress exposed welded and soldered joints smooth. Design door frame sections for use with the wall construction indicated. Corner joints shall be well formed and in true alignment. Conceal fastenings where practicable. On wraparound frames for masonry partitions, provide a throat opening 3 mm larger than the actual masonry thickness. Design other frames in exposed masonry walls or partitions to allow sufficient space between the inside back of trim and masonry to receive calking compound.

##### 4.9.2.1.8.1 Grouted Frames

For frames to be installed and to be filled with mortar or grout, fill the stops with strips of rigid insulation to keep the grout out of the stops and to facilitate installation of stop-applied head and jamb seals.

#### 4.9.2.1.12 Installation

##### 4.9.2.1.12.1 Frames

Set frames in accordance with SDI 105. Plumb, align, and brace securely until permanent anchors are set. Anchor bottoms of frames with expansion bolts or powder-actuated fasteners. Build in or secure wall anchors to adjoining construction. Backfill frames with mortar. When an additive is provided in the mortar, coat inside of frames with corrosion-inhibiting bituminous material.

##### 4.9.2.1.12.2 Doors

Hang doors in accordance with clearances specified in SDI A250.8. After erection and glazing, clean and adjust hardware.

#### 4.9.2.1.13 Protection and Cleaning

Protect doors and frames from damage. Repair damaged doors and frames prior to completion and acceptance of the project or replace with new, as directed. Wire brush rusted frames until rust is removed. Clean thoroughly. Apply an all-over coat of rust-inhibitive paint of the same type used for shop coat. Upon completion, clean exposed surfaces of doors and frames thoroughly. Remove mastic smears and other unsightly marks.

### 4.9.2.2 Wood Doors

Provide doors that are wood, sizes as shown on the drawings with wood frame to match new door masonry openings. All glazed doors shall have 5 mm. single tempered glazing. See drawings for details.

#### 4.9.2.2.1 Accessories

##### 4.9.2.2.1.1 Door Light Openings

Provide glazed openings with the standard wood moldings except that moldings for doors to receive natural finish shall be of the same species and color as the face veneers. Moldings for flush doors shall be lip type.

##### 4.9.2.2.1.2 Weatherstripping

Provide weatherstripping that is a standard cataloged product of a manufacturer regularly engaged in the manufacture of this specialized item. Weather stripping shall be looped neoprene or vinyl held in an extruded non-ferrous metal housing. Air leakage of weather stripped doors shall not exceed 0.003125 cubic meter per second of air per square meter of door area when tested in accordance with ASTM E 283

#### 4.9.2.2.1.3 Prefitting

At the Contractor's option, doors may be provided factory pre-fit. Doors shall be sized and machined at the factory by the door manufacturer in accordance with the standards under which they are produced. The work shall include sizing, beveled edges, mortising, and drilling for hardware and providing necessary beaded openings for glass and louvers. Provide the door manufacturer with the necessary hardware samples, and frame and hardware schedules as required to coordinate the work.

#### 4.9.2.2.1.4 Finishes

Provide door finish colors as selected by the Contracting Officer from the color selection samples.

#### 4.9.2.2.1.5 Water-Resistant Sealer

Provide a water-resistant sealer compatible with the specified finish as approved and as recommended by the door manufacturer.

#### 4.9.2.2.1.6 Installation

Before installation, seal top and bottom edges of doors with the approved water-resistant sealer. Seal cuts made on the job immediately after cutting using approved water-resistant sealer. Fit, trim, and hang doors with a 2 mm minimum, 3 mm maximum clearance at sides and top, and a 5 mm minimum, 6 mm maximum clearance over thresholds. Provide 10 mm minimum, 11 mm maximum clearance at bottom where no threshold occurs. Bevel edges of doors at the rate of 3 mm in 50 mm. Door warp shall not exceed 6 mm when measured in accordance with WDMA I.S. 1-A.

#### 4.9.2.2.1.7 Weather stripping

Install doors in strict accordance with the manufacturer's printed instructions and details. Weather strip exterior swing-type doors at sills, heads and jambs to provide weather tight installation. Apply weather stripping at sills to bottom rails of doors and hold in place with a brass or bronze plate. Apply weather stripping to door frames at jambs and head. Shape weather stripping at sills to suit the threshold.

### 4.9.2.3 Overhead Rolling Doors

Doors shall be fabricated from interlocking cold-rolled slats, designed to withstand building wind loading and be installed with wind locks. Slats shall be continuous for the width of the door. For doors not exceeding 4.27 m, slats shall be flat-profile design, with a depth of not less than 15.9 mm, a center to center width not more than 69.9mm, and not less than a 1.21mm uncoated thickness. Provide weather stripping for door-head and door jamb guides, and a bottom astragal. Weather stripping and astragal shall be natural rubber or neoprene rubber. Curtain jamb guides shall be fabricated from a combination of steel angles of sufficient size to retain curtain against the specified wind. Guides shall be fabricated from structural quality steel angles. Door shall have manufacturer’s standard five pin tumbler locks; keyed. Doors shall be counterbalanced by an adjustable, steel, helical torsion spring mounted around a steel shaft in a spring barrel and connected to the door curtain with the required barrel rings. Hoods shall be fabricated from steel sheets with minimum yield strength of 227.5 Mpasc. Steel slats and hoods shall be hot-dip galvanized G60 in accordance with ASTM A 653/A653M, and shall be treated for paint adhesion and shall receive a factory baked-on finish coat. Aluminum slats and hoods shall receive a mill finish. Surfaces other than slats, hood, and faying surfaces shall be cleaned and treated to assure maximum paint adherence and shall be given a factory dip or spray coat of rust inhibitive metallic oxide or synthetic resin primer. Color shall be selected from manufacturer’s standard colors. Color listed is not intended to limit the selection of equal colors from other manufacturers.

Counterbalance-barrel components shall be as follows:

- Spring barrels shall be hot-formed structural-quality carbon steel, welded or seamless pipe. Pipe shall be of sufficient diameter and wall thickness to limit deflection to a maximum of 1/360 of the span.
- Counterbalance springs shall be oil-tempered helical steel springs designed with a safety factor of 4. Springs shall be sized to counterbalance the weight of the curtain at any point of its travel, and shall be capable of being adjusted to counterbalance not less than 125% of the normal curtain load. Spring adjustment shall be arranged in such a way that the curtain need not be raised or lowered to secure the adjustment.
- Counterbalance shafts shall be case-hardened steel of the proper size to hold the fixed ends of the spring and carry the torsional load of the spring.

Barrel plugs shall be fabricated from cast steel machined to fit the ends of the barrel. Plugs shall secure the ends of the spring to the barrel and the shaft.

Barrel rings shall be fabricated from malleable iron of the proper involute shape to coil the curtain in a uniformly increasing diameter.

Shaft bearings shall be factory sealed ball bearings of the proper size for load and shaft diameters.

Door operators shall consist of a endless steel hand chain, chain-pocket wheel and guard, and a geared reduction unit of at least a 3:1 ratio. Required pull for operation shall not exceed 16 kg. Chain hoists shall have a self-locking mechanism allowing the curtain to be stopped at any point in its upward/downward travel and to remain in that position until moved to the fully open or closed position. Hand chains shall be cadmium-plated alloy steel with a yield point of at least three times the required hand-chain pull.
Pretreated zinc-coated steel sheets shall be given the manufacturer's standard prime coat and an enamel finish coat applied to the exterior face after forming.

After installation, doors, track, and operating equipment will be examined and tested for general operation and weather against the specified wind pressure, and weather resistance. Doors that fail the required tests shall be adjusted and retested. Doors that have been adjusted and fail subsequent tests shall be removed and replaced with new doors at no additional cost.

**4.9.3 Glazing**

ASTM C 1036, or ASTM C 1172 or equal. Acceptable manufacturer : Gürsan or equal

**4.9.3.1 Tempered Glass**

Tempered glass shall be kind FT fully tempered flat type. Class 1 clear, condition A uncoated surface, Quality q3-glazing select, conforming to ASTM, DIN, BS or EN standards. Color shall be clear.

**4.9.3.2 Plastic Glazing (Acrylic Sheets)**

ASTM D 4802, Type II, heat resistant, clear and smooth on both sides, ultraviolet stabilized, scratch resistant, 5 mm thick.

**4.9.3.3 Glazing Accessories**

**4.9.3.3.1 Sealant**

Sealant shall be elastomeric conforming to ASTM, DIN, BS, or EN standards. Type S or M, Grade NS, Class 12.5, Use G. Color of sealant shall be as selected from manufacturer's full range of standard colors by Contracting Officer.

**4.9.3.3.2 Glazing Gaskets**
Glazing gaskets shall be extruded with continuous integral locking projection designed to engage into metal glass holding members to provide a watertight seal during dynamic loading, building movements and thermal movements. Glazing gaskets for a single glazed opening shall be continuous one-piece units with factory-fabricated injection-molded corners free of flashing and burrs. Glazing gaskets shall be in lengths or units recommended by manufacturer to ensure against pull-back at corners.

**4.9.3.3.3 Fixed Glazing Gaskets**

Fixed glazing gaskets shall be closed-cell (sponge) smooth extruded compression gaskets of cured elastomeric virgin neoprene compounds conforming to ASTM, DIN, BS. Or EN standarts.

**4.9.3.3.4 Wedge Glazing Gaskets**

Wedge glazing gaskets shall be high-quality extrusions of cured elastomeric virgin neoprene compounds, ozone resistant, conforming to ASTM, DIN, BS, or EN standards.

**4.9.3.3.5 Putty and Glazing Compound**

Glazing compound shall conform to ASTM, DIN, BS, or EN standards for face-glazing metal sash. Putty shall be linseed oil type conforming to DIN, BS, or EN standards for face-glazing primed wood sash. Putty and glazing compounds shall not be used with insulating glass or laminated glass.

**4.9.3.3.6 Setting and Edge Blocking**

Neoprene setting blocks shall be dense extruded type conforming to ASTM, DIN, BS, or EN standards. Silicone setting blocks shall be required when blocks are in contact with silicone sealant. Profiles, lengths and locations shall be as required and recommended in writing by glass manufacturer.

**4.9.3.4 Preparation**
Openings and framing systems scheduled to receive glass shall be examined for compliance with glass manufacturer's recommendations including size, squareness, offsets at corners, presence and function of weep system, face and edge clearance requirements and effective sealing between joints of glass-framing members. Detrimental materials shall be removed from glazing rabbet and glass surfaced and wiped dry with solvent. Glazing surfaces shall be dry and free of frost.

**4.9.3.5 Installation**

Glass and glazing work shall be performed in accordance with, glass manufacturer's instructions and warranty requirements. Glass shall be installed with factory labels intact and removed only when instructed. Edges and corners shall not be ground, nipped or cut after leaving factory. Springing, forcing or twisting of units during installation will not be permitted.

**4.9.3.6 Cleaning**

Upon completion of project, outside surfaces of glass shall be washed clean and the inside surfaces of glass shall be washed and polished in accordance with glass manufacturer's recommendations.

**4.9.3.7 Protection**

Glass work shall be protected immediately after installation. Glazed openings shall be identified with suitable warning tapes, cloth, or paper flags, attached with non-staining adhesives. Reflective glass shall be protected with a protective material to eliminate any contamination of the reflective coating. Protective material shall be placed far enough away from the coated glass to allow air to circulate to reduce heat buildup and moisture accumulation on the glass. Glass units which are broken, chipped, cracked, abraded, or otherwise damaged during construction activities shall be removed and replaced with new units.

**4.10 FINISHES**

See Section 01335 for color submittals required. Provide color boards with all materials for COR approval prior to ordering materials.

**4.10.1** The exterior of all buildings shall be stucco. A temperature of between 4 and 27 degrees C shall exist for a period of not less than 48 hours prior to application of plaster and for a period of at least 48 hours after plaster has set. Control joints shall be designed for expansion and contraction of plaster work due to thermal exposure. Control joints shall comprise of back to back casing beads. Install new stucco in 2 coats. The first coat shall be a scratch coat approximately 1 cm thick. Allow 7 days to cure. The second coat shall be finish stucco, smooth finish, approximately 1 cm thick. Allow 7 days to cure before painting. Stucco showing oversanding, cracks, blisters, pits, checks, discoloration or other defects is not acceptable. Defective plaster work shall be removed and replaced with new plaster at the expense of the Contractor. Patching of defective work will be permitted only when approved by the Contracting Officer. Patching shall match existing work in texture and color. Paint shall designated for exterior use, with less than .06% lead by weight. Stucco shall be painted with one coat of primer and two coats of finish paint, color to be selected by the Contracting Officer from the color board provided by the Contractor.

**4.10.2** Interior walls shall be plaster applied in a similar manner as exterior stucco. Paint with 2 coats of semi-gloss off-white with less than .06% lead by weight color to be selected by the Contracting Officer from the color board provided by the Contractor.

**4.10.3** Ceilings of Headquarters, shall be plaster applied in 2 coats over wire mesh, which is to be stapled to the 2cm x 6cm wood battens. Paint ceiling with 2 coats of flat white, with less than .06% lead by weight. Gypsum board may be used in lieu of plaster but framing supports for Gypsum board shall be as follows: For ½" thick gypsum board structural fastener supports shall be not further apart than 40 cm. If gypsum board is thicker follow guidelines in ASTM C 840 for supports and fastener frequency

**4.10.4** Ceilings of Dining Facility shall be exposed concrete painted with 2 coats of flat white, with less than .06% lead by weight.

**4.10.5** Paint all exposed wood fascia, soffit, and doors with 2 coats of water-based paint, either clear or white.

**4.10.6** Exposed exterior steel trim, frames, doors and pipe railings: Paint with one coat water-based primer, with 2 coats of water-based paint, color to be selected by the Contracting Officer from the color board provided by the Contractor.

**4.10.7** Exposed wood trim, frames and doors: Paint with one coat oil-based primer, 2 coats of water-based paint, color to be selected by the Contracting Officer from the color board provided by the Contractor

**4.10.8** Tile: Tile work shall not be performed unless the substrate and ambient temperature is at least 10 degrees C and rising. Temperature shall be maintained above 10 degrees C while the work is being performed and for at least 7 days after completion of work. Upon completion, tile surfaces shall be thoroughly cleaned in accordance with manufacturer's approved cleaning instructions. Acid shall not be used for cleaning glazed tile. Floor tile with resinous grout or with factory mixed grout shall be cleaned in accordance with instructions of the grout manufacturer. After the grout has set, tile wall surfaces shall be given a protective coat of a non-corrosive soap or other approved method of protection.

**4.10.8.1** Floors in wet areas shall be 30cm x 30cm terrazzo tile with thin set mortar. Joints shall be 2-3mm. Waterproof gray grout shall be applied the full depth of the tile. Floors shall slope, minimum 1/50, to floor drains. Slope shall be obtained with sloping mortar bed of minimum 2cm thickness. Provide continuous waterproofing membrane beneath sloping mortar bed, turn up wall 30cm behind wall base. Membrane shall be fully sealed at joints and shall shed water into body of floor drain. Color of tile shall be selected by the Contracting Officer from samples provided by the Contractor.

**4.10.8.2** Floors in administration areas/living quarters and corridors shall be 30cm x 30cm terrazzo tile with thin set mortar. Joints shall be 2-3mm. Waterproof gray grout shall be applied the full depth of the tile. Color of tile shall be selected by the Contracting Officer from samples provided by the Contractor.

**4.10.8.3** Walls in wet areas shall be tiled with 150mm x 150mm glazed ceramic tile up to 2 meters above the floor to include interior of toilet stalls, showers and behind sinks. Joints shall be 2-3mm. Waterproof gray grout shall be applied full depth of the tile. Grout shall cure for 72 hours and then be sealed with a commercial grout sealant in two coats. Color of tile shall be selected by the Contracting Officer from samples provided by the Contractor.

**4.10.9** All other floors are to be completely cleaned and painted with floor enamel. Color to be selected by the Contracting Officer from samples provided by the Contractor.

**4.10.10** Kitchen in Dining Facility shall be covered with terrazzo flooring. Walls in kitchen shall be ceramic tile up to 2m above finished floor. Floor in Dining area shall be painted concrete.

**4.11 SPECIALTIES**

### 4.11.1 Mirrors

0.6m x 0.9m, 6mm plate glass, shall be mounted above all lavatories. Mount bottom of mirrors 1.1m above finished floor.

### 4.11.2 Toilet Paper Holders

Toilet paper holders, stainless steel, shall be installed approximately 20 cm above floor in Eastern Toilets.

### 4.11.3 Shower Curtain Rods & Shower Curtain

Shower curtain rods, stainless steel, heavy duty, 18 gauge shall be mounted between the screen walls of each shower stall. Mount rod at 2.0m above finished floor. Provide a shower curtain with support rings for each shower stall.

### 4.11.4 Paper Towel Dispensers and Waste Receptacles

Paper towel dispensers, 0.683 mm Type 304 stainless steel, surface mounted. Furnish tumbler key lock locking mechanism.

### 4.11.5 Light Duty Metal Shelf

Provide a 600mm long, light duty stainless steel shelf and brackets over each lavatory.

## 4.12 STANDARDS

The Contractor should use the following American standards to provide sound structural design if local standards are not available, relevant, or applicable. The Contractor shall follow American Concrete Institute Standards for design and installation of all concrete structures.

| | |
|---|---|
| Concrete | 280.0 kg./sq.cm cylinder strength @ 28 days (ASTM-. C 31M) |
| Steel Reinforcement | 4218.0 kg./sq.cm(Fy= 60.0 ksi),yield strength. |
| Welded Wire Fabric | ASTM A185 |
| Anchor Bolts | ASTM A307 using A36 steel. |
| Concrete Masonry Units | ASTM C90, Type I (normal wt, moisture Cntrl). |
| Mortar | ASTM C270, Type S (Ultimate compressive strength of 130.0 kg/sq. cm.) |
| Proportion | 1 part cement, 0-1/2 part lime and 4-1/2 parts aggregate |
| Grout | ASTM C476 (Slump between 200 mm to 250 and Compressive Strength 14 MPa (2000 psi) at 28 days. |
| Joint Reinforcement | Standard 9 gage minimum, Ladder Type |
| Structural Steel | ASTM A36: 2530.0 kg./sq.cm (Fy = 36,000psi) |
| Welding | AWS (American Welding Society) D1.1-2002. |

# 5. STRUCTURAL

## 5.1 GENERAL

The project consists of various structures. The new buildings shall be constructed as shown on the drawings and stated in the specifications. However, the building foundations have been designed based on assumed geotechnical design parameters. These assume parameters are shown on the foundation plans and stated in Paragraph 5.8, FOUNDATIONS. The contractor shall perform a geotechnical investigation as required in paragraph 2.1 GEOTECHNICAL, FOUNDATIONS AND SURVEY, to verify that the foundations as designed will perform satisfactory. If the contractor determines the building foundations as designed will not function satisfactory, the

contractor shall redesign the foundations accordingly. The contractor is responsible for the foundation design and construction of the foundations.

**5.2 DESIGN**

Foundation design shall be performed and design documents signed by a registered professional structural engineer. Calculations shall be in SI (metric) units of measurements. All components of the building shall be designed and constructed to support safely all loads without exceeding the allowable stress for the materials of construction in the structural members and connections.

**5.3 DEAD AND LIVE LOADS**

Dead loads consist of the weight of all materials of construction incorporated in the buildings. Live loads used for design shall be in accordance with the American Society of Civil Engineers, ASCE STANDARD, and Minimum Design Loads for Buildings and Other Structures, ASCE 7, edition as referenced herein.

**5.4 WIND LOADS**

Wind loads shall be calculated in accordance with ASCE 7 using a "3-second gust" wind speed of 125 km/hr. All facilities shall be classified as a minimum of Category II in accordance with Table 1-1 in ASCE 7, referenced herein.

**5.5 SEISMIC**

The building and all parts thereof shall be designed for the seismic requirements as defined by the International Building Code referenced herein. Site-specific data: Spectral ordinates SS=1.65g and S1=0.75g.

**5.6 STRUCTURAL CONCRETE**

Concrete structural elements shall be designed and constructed in accordance with the provisions of the American Concrete Institute, Building Code Requirements for Structural Concrete, ACI 318, latest edition. A minimum cylinder compressive strength of 4000 psi (28 mPa) shall be used for design and construction of all concrete. Reinforcing steel shall be deformed bars conforming to American Society for Testing and Materials (ASTM) publication ASTM a 615, Deformed and Plain Billet-Steel Bars for Concrete Reinforcement. Concrete at or below grade shall have maximum water-cement ration of 0.40. No concrete shall be placed when the ambient air temperature exceeds 32 degrees C (90 degrees F) unless an appropriate chemical retardant is used. In all cases when concrete is placed at 32 degrees C (90 degrees F) or hotter it shall be covered and kept continuously wet for a minimum of 48 hours. Concrete members at or below grade shall have a minimum concrete cover over reinforcement of 3” (75 millimeters).

**5.7 MASONRY**

Masonry shall be designed and constructed in accordance with the provisions of Building Code Requirements for Masonry Structures, ACI 530/ASCE 5/TMS 402, latest editions. Mortar shall be Type S and conform to ASTM C 270, latest edition. Masonry shall not be used below grade, unless for fully reinforced and grouted foundation stem walls. All cells of exterior CMU walls shall be fully grouted.

**5.8 FOUNDATIONS**

The foundations shall be constructed by using reinforced concrete materials. The foundations system for the one-story building shall be spread footings for individual column footings and grade beams as shown on the drawings. Minimum length and width of spread footings shall be as shown on the drawings. A bearing capacity of 0.75 kg/sq. cm was assumed and used in designing the building foundations. The allowable bearing pressure shall be determined by the Contractor after performing his geotechnical investigation. The maximum allowable settlement

between footings shall be less than 2.5 cm. It is the contractors' responsible to perform a geotechnical investigation and determine if the foundations as shown and designed will perform satisfactory, see paragraph 2.1 GEOTECHNICAL, FOUNDATIONS AND SURVEY. If the contractor determines the foundations as designed will not perform satisfactory, the contractor shall redesign the foundations accordingly.

## 6. NOT USED

## 7. MECHANICAL

### 7.1 GENERAL

Heating and cooling shall be provided by the use of multi-speed ceiling fans and ventless propane heaters in the District Headquarters Building supplemented with electric space heaters where space does not permit installation of propane heaters, such as small guard shacks. Ventless propane heaters shall be installed in accordance with local standards along with outdoor air for combustion.

### 7.2 SPECIALIST SUB-CONTRACTORS QUALIFICATIONS

The heating/ventilation work shall be executed by an air-conditioning specialist sub-contractor experienced in the construction of these types of systems.

### 7.3 CODES, STANDARDS AND REGULATIONS

The equipment, materials and works covered under the heating, ventilation and air-conditioning services shall conform to the referenced standards, codes and regulations where applicable except where otherwise mentioned under each particular clause.

### 7.4 DESIGN CONDITIONS

Noise levels inside occupied spaces generated by HVAC systems shall not exceed NC 35.

### 7.5 VENTILATION AND EXHAUST SYSTEMS

All fans shall be used for building ventilation and pressurization with capacities to be selected for minimum noise level generated. Unit mounted fans either used for supply or exhaust shall be centrifugal forward curved, backward inclined, or airfoil fans with non-overloading characteristics of high efficiency and quiet running design. The fans shall be of the heavy-duty type with durable construction and proved performance in a desert environment. Each exhaust fan shall be provided with shut-off dampers which close automatically when the fan is not running. Also, each fan shall be complete with vibration isolator, external lubricators where bearings require routine lubrication, and all accessories and sound attenuators as necessary.

#### 7.5.1 Submittals

The Contractor shall submit the following for the equipment to be provided under this section of the specification: manufacturer's data including performance characteristics at design conditions; catalog cuts showing dimensions, performance data, electrical requirements, compliance with standards as stated in paragraph CODES, STANDARDS AND REGULATIONS; drawings indicating location and installation details.

### 7.6 ELECTRIC RESISTANCE HEATERS

#### 7.6.1 Cabinet Heater

Provide a self-contained electric heating unit, recessed mounted in wall or structure, with fan and heating elements.

Provide control-circuit terminals and single source of power supply with disconnect. Heating wire element shall be nickel chromium. Include limit controls for overheat protection of heaters. Provide tamper resistant integral thermostat.

**7.6.1.1 Guard Tower**

Provide 4 kW (minimum) cabinet heater in each guard tower. Location shall not interfere with operation of any architectural feature (door, window, etc.). Mounting height shall be 200mm above finished floor to bottom of unit unless this causes interference with windows.

**7.6.2 Submittals**

The Contractor shall submit the following for the equipment to be provided under this section of the specification: manufacturer's data including performance characteristics at design conditions; catalog cuts showing dimensions, performance data, electrical requirements, compliance with standards as stated in paragraph CODES, STANDARDS AND REGULATIONS; drawings indicating location and installation details.

**7.7 CEILING FANS**

**7.7.1 Ceiling Fan**

Provide 1320mm blade ceiling fans at one per 40 square meters of floor space. Fans shall have reversible motors. Center or distribute evenly in room. Coordinate placement with the lighting plan to prevent conflict or casting shadows. Fan mount shall be flush, standard, or angle mount depending on ceiling height. Fan shall be mounted such that the fan blade is approximately 2.44 meters above the finished floor. The fan shall be provided with out light kit. The finish shall be factory painted white. The controls shall be from either a single pole switch or from two 3 way switches to provide on/off operation. The electrical supply shall be 220volts, single phase, and 50 hertz. Install per manufacturers' instructions.

**7.7.2 Submittals**

The Contractor shall submit the following for the equipment to be provided under this section of the specification: manufacturer's data including performance characteristics at design conditions; catalog cuts showing dimensions, performance data, electrical requirements, compliance with standards as stated in paragraph CODES, STANDARDS AND REGULATIONS; drawings indicating location and installation details.

**7.8 PROPANE HEATER SPACE HEATING**

Provide vented propane heaters at the locations indicated. Install with adequate clearances per manufactures installation guide. Provide isolation valve and drip leg at each heater connection point. The appliance shall be designed for vented indoor installation and be provided with either a standing pilot or electronic ignition system. The system shall be installed in a building that has a ventilation system to introduce. Combustion air route vents through nearest wall or roof as coordinated with the Resident Engineer.

**7.8.1 Submittals**.

The Contractor shall submit the following for the equipment to be provided under this section of the specification: manufacturer's data including performance characteristics at design conditions; catalog cuts showing dimensions, performance data; drawings indicating location and installation details.

**7.9 Propane Stove Cooking**

Cooking area shall be provided canopy type exhaust only kitchen hoods and associated exhaust fans. These exhaust hoods shall include baffle type aluminum filters to trap grease/oil. The exhaust fan sizing calculations should recognize the use of propane stoves in the kitchen. Sizing should accommodate all propane burning stoves running simultaneously. Additionally, the placement of the exhaust hood should allow enough clearance for an average sized male to stand on top of the stove platform unobstructed, for standing on the stove is common local cooking practice. The higher than average placement of the hood will require the extension of the lip of the hood out further than normal, in order to catch the majority of the smoke and adequately vent the area.

Make-up air for kitchen hood exhaust shall be pulled in from roof mounted, louvered, penthouse with intake air filter and from adjoining Kitchen/Dining areas.

**7.10 TEST ON COMPLETION**

After completion of the work, the Contractor shall demonstrate to the Contracting Officer that the installation is adjusted and regulated correctly to fulfill the function for which it is intended. The Contractor shall test, adjust, balance and regulate the section or sections of concern as necessary until the required conditions are obtained. Include tests for all interlocks, safety cutouts and other protective device to ensure correct functioning. All such tests shall be carried out and full records of the values obtained shall be prepared along with the final settings and submitted to the Contracting Officer in writing.

**8. PLUMBING**

**8.1 SYSTEM REQUIREMENTS**

Domestic water and waste systems shall be provided to each area with fixtures requiring water and/or waste connections such as toilets, etc. The entire water system shall include cold water to each fixture as well as to a water heater. Hot water shall be distributed to all kitchen sinks, showers, etc. as indicated. The water distribution and waste systems shall be in complete accordance with the requirements of the International Plumbing Code (IPC, latest edition). The Contractor shall furnish, install and test the domestic water supply system as shown on the drawings. Contractor shall install the domestic water tank system such that can be easily converted to a permanent system in the future. All water distribution system components exposed to the outdoors shall be provided with freeze protection to ensure water is available throughout the year.

**8.2 PIPING MATERIALS**

Domestic water shall be distributed by means of PVC (cold water only), CPVC (cold or hot water) or copper for the pressure to be utilized. PVC and CPVC shall not be used in areas where it will be exposed to outdoor sun.

**8.3 FIXTURES**

All plumbing fixtures shall be provided with p-traps and shall be vented to the roof per International Plumbing Code, latest edition.

**8.3.1 Eastern Style Water Closet with Flush Tank**

Provide acid resisting fired porcelain enameled cast iron water closet complete with rotating No-Hub 'P' trap and No-Hub coupling to meet piping requirements. Eastern Style water closet shall be furnished with integral non-skid foot pads and bowl wash down non-splashing flushing rim. The water closet shall be completely self supporting requiring no external mounting hardware and shall be flush with floor. The Eastern Style water closet shall incorporate waterproofing membrane flashing flange. Provide wall mounted faucet on the right hand side of the water closet stall as viewed from the in-use position. Toilets shall be oriented north and south. Toilets shall not face east or west.

**8.3.2 Western Water Closet**

Western water closet with flush tank assembly as specified by the designer. Vitreous china color mounted, elongated bowl type. Provide at least one (1) western type water closet in Dining Facility, and HQ Buildings.

**8.3.3 Lavatories**

All sinks shall be trough type constructed of block and concrete with ceramic tile exterior and lining capable of withstanding abuse. Faucets shall be chrome plated brass single lever mixing type.

**8.3.4 Water Heater**

Electric type water heaters shall conform to UL 174 with dual heating elements. Each element shall be 4.5 KW. The elements shall be wired so that only one element can operate at a time. Each water heater shall have controls with an adjustable range that includes 32 to 71 degrees C. Electrical wiring shall be installed per the NEC and the manufacturer's instructions. Piping and fittings for hot, cold, drain, and pressure temp connections shall be installed per the manufacturer's recommendations.

**8.3.5 Plastic Shower Stalls**

Provide one piece or four piece white solid acrylic pressure molded fiberglass reinforced plastic shower stalls. Shower stalls shall be scratch resistant, waterproof, and reinforced. Provide recessed type shower stalls approximately 914 mm wide, 914 mm front to rear, 1829 mm high, and 125 high mm high curb with shower stall bottom or feet firmly supported by a smooth level floor. Provide PVC shower floor drains and stainless steel strainers. Install shower stall in accordance with the manufacturer's written instructions. Provide smooth 100 percent silicone rubber white bathtub calk between the top, sides, and bottom of shower stalls and bathroom walls and floors.

**8.3.6 Scullery Sink (Kitchen Area)**

Provide 14 gauge, type 304, (18-8) stainless steel, sink with drain board. Compartments shall be large enough to wash posts 1 meter in diameter. Sink shall be supported on four stainless steel legs. Sink shall have pre-drilled in backsplash at manufacturer for commercial faucet. Commercial faucet shall be solid brass construction, chrome finish, wall mount 203mm center arc tube.

**8.3.7 Floor Drain and Shower Drain**

Floor drains and shower drains shall consist of a galvanized body, integral seepage pan, and adjustable perforated or slotted chromium-plated bronze, nickel-bronze, or nickel-brass strainer, consisting of grate and threaded collar. Floor drains shall be cast iron except where metallic waterproofing membrane is installed.

**8.3.8 Insulation**

All domestic water pipe and fittings that are exposed and not inside an insulated wall shall be insulated. In addition, all water pipe that is exposed shall also be covered with metal jacketing. Water piping exposed to outdoor conditions shall be provided with heat trace to prevent freezing.

**8.3.9 Trench Type Floor Drain**

Trench type floor drains shall consist of a cast iron or galvanized body, integral seepage pan, and slotted chromium-plated bronze, nickel-bronze, or nickel-brass grate. Grate shall be 300 mm wide and 2000 mm long.

**8.4 Generator Fuel Storage**

The work shall include the fabrication and installation of the entire fuel storage and distribution system. Tanks shall be skid mounted. Tanks of this type that have a capacity above 2640 L will be provided with a either a dike or a spill containment system. The dike or spill containment system should have enough capacity for the entire contents of the tank plus 10 percent. Provide a molded neoprene isolation pad to isolate an aboveground tank from the concrete pad underneath. Steel tank supports specifically are prone to encounter premature rusting due to constant exposure to moisture and their incompatibility with concrete. Tank shall be designed and manufactured for horizontal installation. Tank shall be mounted on the tank manufacturer's standard support skid. Skid shall span the entire length of the tank and shall separate the tank from the reinforced concrete slab by a minimum of 200 mm. Indicate on the drawings the number and size of each tank manway required. Tanks of 3,780 to 45,430 L to capacity will be provided with 760 mm diameter manways. Tanks larger than 45,430 L will be provided with 915 mm diameter manways. Tanks 3,780 L and larger will be provided with a minimum of 1 tank manway to allow for internal tank access. Piping will not penetrate through access manways. Tank shall be provided with a combination cleanout and gauge connection. Vent pipe sizing shall be not less than 32 mm nominal inside diameter. Vent shall be the rupture disc type calibrated to burst at 13.8 kPa pressure, and operate at 80 percent of burst setting. Tank shall be provided with an overfill alarm system. Tank shall be provided with 2 stick gauges graduated in m and mm. Stick gauge shall be of wood and treated after graduating to prevent swelling or damage from the fuel being stored. Each storage tank shall be provided with an automatic analog reading gauge which is directly mounted to a tank's manway cover. Provide an in-line centrifugal pump as par of the day tank package for fuel transfer from the bulk storage tanks to the day tank. Day tanks shall provide sufficient fuel for four hours of generator operation without refill. Provide cathodic protection for metal components. Storage tanks shall be handled with extreme care to prevent damage during placement and shall be installed in accordance with the manufacturer's installation instructions. Piping shall be inspected, tested, and approved before burying, covering, or concealing. Piping shall be installed straight and true to bear evenly on supports. Piping shall be free of traps, shall not be embedded in concrete pavement, and shall drain toward the corresponding storage tank. Any pipe, fittings, or appurtenances found defective after installation shall be replaced. Belowground nonmetallic pipe shall be installed in accordance with pipe manufacturer's instructions. Belowground piping shall be laid with a minimum pitch of 25 mm per 6 m. A tightness test shall be performed on each aboveground storage tank. The tests shall be performed prior to making piping connections. Tests shall be capable of detecting a 0.1 mL/s leak rate from any portion of the tank while accounting for effects of thermal expansion or contraction. Each storage tank shall be pressurized with air to 35 kPa and monitored for a drop in pressure over a 2-hour period during which there shall be no drop in pressure in the tank greater than that allowed for pressure variations due to thermal effects. Following the tank tightness test, each storage tank shall be leak tested in accordance with the manufacturer's written test procedure if the manufacturer's test procedure is different from the tightness tests already performed. Each storage tank shall be filled with the proper fuel.

Submittals:
Manufacturer's standard catalog data
Installation Manual
Operation and Maintenance Manuals
Tests Results:
Six copies of each test containing the information described below in bound letter-size booklets. Individual reports shall be provided for the storage tank tests, the piping tests, the system performance tests, the high level alarm test, and the system leak tests. Drawings shall be folded blue lines, with the title block visible.
a. The date the tests were performed.
b. A list of equipment used, with calibration certifications.
c. A copy of measurements taken.
d. The parameters to be verified.
e. The condition specified for the parameter.
f. The inspection results, signed, dated, and certified by the installer. The certification shall state that required procedures were accomplished, that the procedures were conducted in compliance with the plans and specifications.
g. A description of adjustments performed.

**8.6 Submittals.**

The Contractor shall submit the following for the equipment to be provided under this section of the specification: manufacturer's data including performance characteristics at design conditions; catalog cuts showing dimensions, performance data, electrical requirements, and drawings indicating location and installation details.

## 9. FIRE PROTECTION

### 9.1 GENERAL

Facility construction and fire protection systems shall be installed in accordance with the publications listed herein and the publications referenced therein. Where a conflict occurs among various criteria, the more stringent requirement shall take precedence.

### 9.2 BUILDING CONSTRUCTION

Building construction shall conform to fire resistance requirements, allowable floor area, building height limitations and building separation distance requirements of the building code.

### 9.3 LIFE SAFETY

Per User, compliance with NFPA 101, Life Safety Code, is not required.

### 9.4 FIRE PROTECTION EQUIPMENT

Per user, a sprinkler system is not required.

### 9.5 FIRE ALARM AND DETECTION

Per user, a fire alarm and detection system is not required.

### 9.6 WATER SUPPLY FOR FIRE PROTECTION

Water supply for fire protection is not required.

### 9.7 PORTABLE FIRE EXTINGUISHERS

Portable fire extinguishers (PFEs) shall be provided (and installed) in the Kitchen, DFAC, and in each hallway in accordance with the requirements of NFPA 10. Portable fire extinguishers shall be Multi-purpose Dry Chemical rated 4A:80B:C. Extinguishers shall be wall-mounted on hanger hooks with at least 12 inches clearance from the floor in easily accessible locations. Travel distance to an extinguisher from any location in the building shall be no greater than 75 feet.

## 10. ELECTRICAL

### 10.1 SCOPE OF WORK

10.1.1 General. Contractor shall construct following systems in compliance with the attached contract drawing and as described below. Systems shall include but not limited to:

(a) On-site Prime Power Generating Plant
(b) Exterior Underground Secondary Power Distribution System
(c) Interior Secondary Distribution System
(d) Lighting and power branch circuitry
(e) Interior telephone wiring
(f) Closed Circuit Television (CCTV) System.

(g) Lightning Protection System

All of the systems shall be designed for the ultimate demand loads, plus 20% spare capacity. Above Systems shall be designed for and to provide service to the following facilities as a minimum:

1. ANP Headquarters / Administration Building
2. Guard Shacks (2)
3. Guard House (1)
4. Guard Towers (4)
5. Power Plant
6. Administration Building - A (Future) Not-In-Contract
7. Administration Building - B (Future) Not-In-Contract

See Site Plan for details.

**10.2 DESIGN CRITERIA**

**10.2.1 Applicable Standards**

a. National Fire Protection Association, NFPA 70 (National Electric Code, 2005 Edition).

b. National Fire Protection Association, Life Safety Code, NFPA 101

c. National Fire Protection Association, Lightning Protection Code, NFPA 780

d. Illuminating Engineering Society of North America (IES)

e. Applicable Afghan Standards, as a minimum.

10.2.2 Design shall be in metric units.

10.2.3 Conflicts between criteria and/or local standards shall be brought to the attention of the Contracting Officer for resolution. In such instances, all available information shall be furnished to the Contracting Officer for approval.

**10.3 MATERIAL**

10.3.1 General: Unless noted otherwise, all material used shall be in compliance with the requirements of the applicable German (DIN) Standards. In the event DIN Standard material is unavailable, contractor may then select comparable British Standard (BS), or Underwriters Laboratories Inc. (UL) listed material. Equipment enclosure types shall be in compliance with the National Electrical Manufacturer's Association (NEMA) or the International Electro-Technical Committee (IEC) standards. Material and equipment installed under this contract shall be for the appropriate application.

10.3.2 Standard Product: All material and equipment shall be a standard product of a manufacturer regularly engaged in the manufacture of the product and shall essentially duplicate items that have been in satisfactory use for at least two (2) years prior to bid opening.

10.3.3 Design Conditions: All equipment shall be rated and designed for 40 Degree Centigrade and elevation of 2000 meters above sea level.

10.3.4 Restrictions: Aluminum conductors shall not be used or specified.

**10.4 DESIGN REQUIREMENTS**

10.4.1 Power Plant: On-site Prime Power Generating Plant shall be provided for this Compound as per that attached drawings. Electrical equipment shall include, but not be limited to, diesel engine generators, secondary voltage switchboard, day tanks, relaying equipment and all other auxiliary equipment that is necessary for operating a Prime Power Plant. All major equipment shall have brief operating instructions posted on them in English and Afghan languages. Secondary wiring within the building shall be per paragraph ‘Secondary Power Distribution System’, as noted below. All cabling within the Power Plant associated with Power Generation (Generator to Switchboard) shall be installed underground in direct buried PVC Schedule 40 (Sch 40) conduits. Power plant shall be provided with a Lightning Protection System.

10.4.1.1 Generators: Two (2) generators, rated at 80KW each, shall be provided inside 'weather-proof' enclosures and shall be for exterior application. Generators shall be skid mounted standard industry size, 1500 RPM; diesel-engine Prime Power rated units. Generating voltage shall be 3 phase, 380 volts and 50 Hertz, for Compound wide Secondary Power Distribution, through the generator switchboard as described below. Generator starting shall be electric. Each generator shall be provided with a day tank with a minimum fuel capacity of 4 hours operating at 100% generator rating (name plate kW rating). Sharing of Compound demand load between the generators shall be via generator synchronizing equipment. See drawings for detail requirements.

10.4.1.2 Load Bank: Contractor shall provide a factory manufactured, industry standard permanent load bank connected to the generator secondary switchboard bus to supplement for low demand load on the operating generator. Load bank shall be rated at 80 kW, with 20 kW load steps. Unit shall be provided with a control panel and necessary circuit protection.

10.4.1.3 Fuel Storage / Distribution System: Refer to Mechanical Section 01015 and design drawings for generator fuel storage / distribution system requirements.

10.4.1.4 Miscellaneous: Contractor shall be responsible for providing all relaying, metering and power plant grounding equipment necessary for safe and efficient operation of the power plant. Relaying shall include, but not be limited to, differential, locking-out, over current, directional and reverse power.

10.4.1.5 Generator Switchboard: Generator Switchboard shall be located with the generators and shall be the central distributing point for the Site Secondary Power Distribution System. Switchboard shall be circuit breaker type, consisting of a main circuit breaker, feeder circuit breakers for service to various facilities on the Compound. Switchboard shall be sized and provided with the required number of circuit breakers to service all facilities in this Contract and future facilities identified on the Site Plan. In addition, the Switchboard shall be provided with two (2) spaces for any future 3 pole circuit breakers. See Power Plant design drawings for details. Switchboard shall be provided inside a 'weather-proof' enclosure and shall be for exterior application.

10.4.1.6 Operating Instructions: Contractor shall provide, mounted in a frame, a complete electrical one-line diagram of the power plant with detail operating instruction. Instructions shall be mounted inside respective generator and switchboard enclosures. Similarly, complete fuel and cooling system schematic diagrams shall also be provided with the operating instructions. Brief operating instructions shall be posted on major components at the power plant. These instructions shall be written in English and Afghanistan languages.

10.4.2 Site Secondary Power Distribution System: This shall include installation of Secondary Power Distribution Systems in underground, direct buried PVC Schedule 40 conduits system. System shall include hand-holes for secondary power cables.

10.4.2.1 Raceways: Exterior raceways (conduits) shall be installed at a slope towards the hand-hole to avoid collection of water in the raceway. Conduit shall be PVC, Schedule 40. Secondary cable shall be installed in conduit no less than 50mm (2 inch). Duct bank conduits shall be cleaned with a wire mandrel prior to the installation of cables. Minimum of two (2) spare conduits shall be provided in all main trunks and capped at both ends. Top of the conduits shall be below the frost line or a minimum of 24 inch (600mm) below grade.

10.4.2.2 Cables: All secondary voltage cables shall be copper, designed for underground installation and shall have appropriate secondary voltage ratings.

10.4.3 Secondary Power Distribution System: Secondary Power shall be 380/220 volts, 3 phase, 4 wire, 50 Hz. Building secondary power distribution system shall include main distribution panel. All panel boards shall be factory fabricated, ‘bolt-on’ circuit breaker type and each provided with a main circuit breaker. In large buildings, with 225 Amp or greater service, separate lighting and power panels shall be provided. It is recommended that minimum size circuit breaker be rated at 20 amperes. Circuit breakers shall be connected to bus bar(s) within the panel boards. Daisy chain (breaker-to-breaker) connection(s) shall not be acceptable. Indoor distribution panels and load centers shall be flush mounted in finished areas. All circuit breakers shall be labeled with an identification number corresponding to the panel schedule. A 3-pole circuit breaker shall be a single unit and not made up of 3 single pole circuit breakers connected with a wire or bridged to make a 3-pole breaker. All wiring shall be copper, minimum # 12 AWG (4mm sq) and installed in surface mounted metal conduits. All panels shall be provided with a minimum of 20% spare capacity for future load growth. Power receptacles (outlets) shall be duplex, 240 volts, 50 HZ, German (DIN) Standard. All splicing and terminations of wires shall be performed in a junction or device boxes. Proper wire nuts/connectors shall be used for splicing wire. No twist-wire connections with electrical tape wrapped around it shall be acceptable. All electrical installation shall be in accordance with the requirements of NFPA 70 (National Electric Code). Main Distribution Panel in large buildings shall be provided with an ammeter, voltmeter and kilowatt-hour meter. Selector switch shall be provided for reading all 3 phases. All service entrance cables and equipment, such as main distribution panels etc., to the facilities shall be sized for the ultimate facility loads, to include any heating and air-conditioning loads, initial and / or future, to be provided by others.

10.4.3.1 Receptacles: General purpose receptacles shall be duplex, grounding (earthed) type, 'surface' wall mounted type, color ivory and installed 500 mm above finished floor (AFF). In office or similar areas receptacles shall be provided at 3 M intervals. CEE Type receptacles with plugs (2P+E (240v) or 3P+E (380v) and with appropriate rating, shall be provided for, but not be limited to, kitchen equipment and any other type of large plug-able equipment. Receptacle shall be complete to include box, cover plate and necessary screws/connectors and of the type most commonly used in Afghanistan. Receptacles near sinks or lavatories shall be switch operated and Ground Fault Circuit Interrupter (GFCI), or Residual Current Disconnect (RCD) type, with the trip setting of 30 milliampere or less.

10.4.3.2 Lighting: Light Fixtures: Lighting fixtures shall be a standard manufacturer’s product. Fluorescent light fixtures shall be power factor corrected and equipped with standard magnetic ballast(s). All light fixtures shall be capable of receiving standard lamps used and available locally. Light fixtures shall be mounted at 2.7M, minimum, AFF. Fixtures may be pendant or ceiling mounted, depending on the ceiling height and type. Emergency lighting, emergency egress ‘exit’ lights and exterior building lighting shall be provided, as shown on the drawings.
Light fixtures provided inside jail cells shall be vandal resistant and detention center grade fixtures. All fixtures shall be fully factory wired.

10.4.3.2.1 Light Switch: Light switch shall be single pole. Minimum of one light switch shall be provided in every room. Lighting in large rooms/areas may be controlled from multiple switches. Lighting contactors may be used to operate lighting in open or large bay areas.

10.5 Search Light: Search light shall be prison / security search light and provided on top of each Guard Tower. Search light shall be operable from inside the guard tower cab. See design drawings for details.

10.6 Conductors: All cable and wire conductors shall be copper. Conductor jacket or insulation shall be color coded to satisfy local utility requirements.

10.7 Grounding & Bonding: Grounding and bonding shall comply with the requirements of NFPA 70. Underground connections shall be exothermal welded. All exposed non-current carrying metallic parts of electrical equipment in the electrical system shall be grounded. Insulated grounding conductor (separate from the electrical system neutral conductor) shall be installed in all feeder and branch circuit raceways. Grounding conductor shall be green-colored, unless the local authority requires a different color-coded conductor. Ground rods shall be 20mm in diameter, 3

meter long and of copper-clad steel. Ground resistance shall not exceed 25 ohms when measured less than 48 hours after rainfall.

10.8 Enclosures: Enclosures for exterior and interior applications shall be NEMA Type 3R (IEC Classification IP14) and NEMA Type 1 (IEC Classification IP10), respectively.

10.9 Closed Circuit Television (CCTV): CCTV System shall be complete and basic. System shall include CCTV cameras, cable installed in metal conduit system, digital video recorder and monitor(s). CCTV cameras shall be placed such that to monitor the jail cells. CCTV monitor shall be located in the Guard Room. Final location of the CCTV monitor(s) and cameras shall be coordinated with the Contracting Officer. See design drawings for details.

10.10 Telephone/DATA System: Telephone/DATA System shall include cross-connect box, duplex RJ-45 telephone outlets and empty conduit system. The Contracting Officer shall determine outlet locations for individual rooms. Telephone wiring shall be provided by others. Conduit system shall be metal conduits, surface mounted. Two (2) 50mm conduits with pull-wire shall be provided from the cross connect box to the outside communication hand-hole. Exterior plant telephone cabling shall be provided/installed by others/User. See design drawings for details.

10.11 Lightning Protection System: Lightning Protection System shall be provided in accordance with the requirements of NFPA 780 or as minimum per Afghan Standards and shall be for all facilities to be built under this Contract.

10.12 Identification Nameplates: Major items of electrical equipment, such as the generators, switchboard, panel boards and load centers, shall be provided with a permanently installed engraved identification nameplate.

10.13 Schedules: All panel boards and load centers shall be provided with a panel schedule. Schedule shall be typed written in English and Afghan languages.

10.14 Single Line Diagrams: Complete single line diagram shall be provided in the Power Plant Switchboard Room and in Panelboards in each building. Single line diagram shall show all panels serviced from the generator switchboard and from main distribution panel in each building.

10.15 Acceptance Tests: All systems shall be tested in the presence of the COR for satisfactory operation prior to the turnover and acceptance of the facilities by the Government.

10.16 Guard Towers: Contractor shall design and construct Lighting, Power and Lightning Protection Systems for the Guard Towers. Each guard tower shall be provided with a minimum of 2 duplex power receptacles, 2 ceiling mounted light fixtures, light switch, roof mounted search light, one telephone outlet and necessary circuitry for any and all mechanical equipment to be provided for the guard tower. Lighting level shall be calculated at 30 FC (300 Lux). Lightning protection system shall consist of minimum of one (1) roof mounted air terminal, roof conductor(s), down conductor(s) and ground rods. Contractor shall also be responsible for providing electric service to each Guard Tower from the Power Plant Switchboard. Each service entrance shall be installed underground in concrete encased duct-bank and sized for appropriate loads. Design of all systems shall be in compliance with the requirements as described above.

-- End of Section --

# SECTION 01060

# SPECIAL CLAUSES

## PART 1 GENERAL

### 1.1 PRECONSTRUCTION CONFERENCE

#### 1.1.1 Schedule of Meeting

At the earliest practicable time, prior to commencement of the work, the Contractor and any Subcontractors whose presence is necessary or requested, shall meet in conference with representatives of the Contracting Officer to discuss and develop a mutual understanding relative to the details of the administration and execution of this contract. This will include but not necessarily be limited to the Contractor's Quality Control (CQC) Program, the Contractors Accident Prevention Program, submittals, correspondence, schedule, access to the work site, security requirements, interface requirements, temporary facilities and services, hazards and risks, working after normal hours or on weekends or holidays, assignment of inspectors, representations, special requirements, phasing, and other aspects of this project that warrant clarification and understanding.

#### 1.1.2 Meeting Minutes

It shall be the responsibility of the Contractors CQC System Manager to prepare detailed minutes of this meeting and submit those minutes to the Contracting Officer for approval within three (3) workdays. Any corrections deemed necessary by the Contracting Officer shall be incorporated and resubmitted within two (2) calendar days after receipt. Upon approval of the minutes by the Contracting Officer, the Contractor shall distribute the minutes to all parties present or concerned.

### 1.2 AREA USE PLAN

The Contractor shall submit to the Contracting Officer, within ten (10) calendar days after award of this task order, an Area Use Plan designating intended use of all areas within the project boundaries. This plan shall include, but not necessarily be limited to the following: the proposed location and dimensions of any area to be fenced and used by the Contractor; construction plant and building installations/the number of trailers and facilities to be used; avenues of ingress/egress to the fenced areas and details of the fence installation; drawings showing temporary electrical installations; temporary water and sewage disposal installations; material storage areas; hazardous storage areas. Any areas that may have to be graveled shall also be identified. The plan shall also include a narrative description of the building structural system, the site utility system and the office or administration facilities. The Contractor shall also indicate if the use of a supplemental or other staging area is desired. The Contractor shall not begin construction of the mobilization facilities prior to approval by the Contracting Officer of the Area Use Plan described herein.

### 1.3 CONTRACTOR'S MOBILIZATION AREA

The Contractor will be permitted to use an area approved by the Contracting Officer within the contract limits for operation of his construction equipment and plants, shops, warehouses, and offices. The Contractor is responsible for obtaining any required additional mobilization area above that designated. The construction site shall be cleared of construction debris and other materials and the area restored to its final grade.

#### 1.3.1 Contractor's Temporary Facilities

#### 1.3.1.1 General

All facilities within the Contractor's mobilization area shall be of substantial construction suitable for the local weather conditions. Sanitary facilities shall meet the requirements of Corps of Engineers, Safety and Health Requirements Manual EM 385-1-1.

#### 1.3.1.2 Administrative Field Offices

The Contractor may provide and maintain administrative field office facilities within the mobilization area at the designated site. Government office and warehouse facilities will not be available to the Contractor's personnel.

#### 1.3.1.3 Storage Area

The Contractor shall construct a temporary 1.8 meter (6 foot) high chain link fence around trailers and materials. Fence posts may be driven, in lieu of concrete bases, where soil conditions permit. Trailers, materials, or equipment shall not be placed or stored outside the fenced area unless approved in writing by the Contracting Officer.

#### 1.3.1.4 Plant Communication

Whenever the Contractor has the individual elements of its plant so located that operation by normal voice between these elements is not satisfactory, the Contractor shall install a satisfactory means of communication, such as telephone or other suitable devices. These devices shall be made available for use by Government personnel.

.

#### 1.3.1.5 Appearance of Mobilization Site Facilities and/or Trailers

Mobilization Site Facilities and/or Trailers utilized by the Contractor for administrative or material storage purposes shall present a clean and neat exterior appearance and shall be in a state of good repair. Trailers or other transportable structures which, in the opinion of the Contracting Officer, require exterior painting or maintenance will not be allowed on the construction site until such work or maintenance has been performed to the satisfaction of the Contracting Officer.

#### 1.3.1.6 Maintenance of Storage Area

Fencing shall be kept in a state of good repair and proper alignment. Should the Contractor elect to traverse unpaved areas which are not established roadways with construction equipment or other vehicles, such areas shall be covered with a layer of gravel as necessary to prevent rutting and the tracking of soil onto paved or established roadways; gravel gradation shall be at the Contractor's discretion.

#### 1.3.1.7 Security Provisions

Adequate outside security lighting shall be provided at the Contractor's temporary facilities. The Contractor shall be responsible for the security of its own facilities and equipment.

#### 1.3.1.8 Sanitation

a. Sanitary Facilities: The Contractor shall provide portable sanitation facilities for the Contractor’s use. The Contractor shall be responsible for maintaining such facilities at no expense to the Government.

b. Trash Disposal: The Contractor shall be responsible for collection and disposal of trash from the work areas and from the mobilization area. General construction debris and demolition debris shall be collected and transported by the Contractor to a location designated by the Government. Construction

debris, waste materials, packaging material and the like shall be removed from the work site daily. Loose debris capable of being windblown, shall be immediately placed in sealed or covered containers to prevent it from being blown onto the base. Any dirt or soil that is tracked onto paved or surfaced roadways shall be cleaned daily. Materials resulting from demolition activities that are salvageable shall be stored within the fenced area described above. Stored material not indoors, whether new or salvaged, shall be neatly stacked when stored.

**1.3.1.9 Telephone**

The Contractor shall make arrangements to install and pay all costs for telephone facilities desired.

**1.3.1.10 Restoration of Storage Area**

Upon completion of the project and after removal of mobilization facilities, trailers, materials, and equipment from within the fenced area, the fence shall be removed and will become the property of the Contractor. Areas used by the Contractor for the storage of equipment or material, or other use, shall be restored to the original or better condition. Gravel used to traverse unpaved areas shall be removed and all such areas restored to their original conditions.

**1.3.2 Protection and Maintenance of Traffic**

During construction the Contractor shall provide access and temporary relocated roads as necessary to maintain traffic. The Contractor shall maintain and protect traffic on all affected roads during the construction period except as otherwise specifically directed by the Contracting Officer. Measures for the protection and diversion of traffic, including the provision of watchmen and flagmen, erection of barricades, placing of lights around and in front of equipment and the work, and the erection and maintenance of adequate warning, danger, and direction signs, shall be as required by the Host Nation and base authorities having jurisdiction. The traveling public shall be protected from damage to person and property. The Contractor's traffic on roads selected for hauling material to and from the site shall interfere as little as possible with base traffic. The Contractor shall investigate the adequacy of existing roads and the allowable load limit on these roads. The Contractor shall be responsible for the repair of any damage to roads caused by construction operations.

**1.3.2.1 Not used.**

**1.3.2.2 Not used.**

**1.3.3 Temporary Project Safety Fencing and Barricades**

The Contractor shall impose all measures necessary to limit public access to hazardous areas and to ensure the restriction of workers to the immediate area of the construction and mobilization site. The Contracting Officer may require in writing that the Contractor remove from the work any employee found to be in violation of this requirement.

**1.3.3.1 Barricades**

Barricades shall be required whenever safe public access to paved areas such as roads, parking areas or sidewalks is prevented by construction activities or as otherwise necessary to ensure the safety of both pedestrian and vehicular traffic. Barricades shall be securely placed, clearly visible with adequate illumination to provide sufficient visual warning of the hazard during both day and night. Travel to and from the project site shall be restricted to a route approved by the Contracting Officer.

**1.3.4 Host Nation Authorizations, Permits and Licenses**

It shall be the Contractor's responsibility to obtain such local authorizations, permits and licenses

necessary to establish his quarry operations, batching operations and haul routes (See Special Clause entitled: COMPLIANCE WITH HOST COUNTRY RULES AND CUSTOMS).

**1.4 RESPONSIBILITY FOR PHYSICAL SECURITY**

Prior to mobilization, the Contractor shall submit his proposed means of providing project security to prevent unauthorized access to equipment, facilities, materials and documents, and to safeguard them against sabotage, damage, and theft. The Contractor shall be responsible for physical security of all materials, supplies, and equipment of every description, including property which may be Government-furnished or owned, for all areas occupied jointly by the Contractor and the Government, as well as for all work performed.

**1.5 DUST CONTROL**

The Contractor shall be required to control objectionable dust in the work areas, access roadways, and haul roads by means of controlled vehicle speeds or dust palliatives. Vehicles transporting sand, cement, gravel or other materials creating a dust problem shall be covered, as directed by the Contracting Officer, or in accordance with local Laws, codes, and regulations.

**1.6 DIGGING PERMITS**

**1.6.1 Requirements for Digging Permits**

**1.6.2 Not used.**

Requests for Digging Permits shall be submitted to Contracting Officer a minimum of seven (7) days prior to the start of the work activity covered by the permit. The request for a Digging Permit shall include a narrative description of the work to be performed and a detailed map of the area of the excavation clearly marking the location of all known utilities or other obstructions. If the work activity covered by the Digging Permit request also requires a utility outage, a separate request for the outage shall be submitted in accordance with the paragraph entitled CONNECTIONS TO EXISTING UTILITIES.

**1.6.3 Preparation of Requests for Digging Permits**

Prior to submitting a request for a Digging Permit, the Contractor shall carefully review the area to be excavated to determine the location of existing utilities and other obstructions. The Contractor will review available drawings and will conduct a visual inspection of the site. The Contractor will utilize underground utility detecting devices such as metal and cable detectors to determine the location of existing utilities. All utility lines found shall be clearly flagged or marked and the location of the utility shall be shown on the drawing to be submitted with the request for Digging Permit.

**1.6.4 Existing Underground Utilities**

The Contractor shall exercise utmost care in researching locations of existing utilities and reducing damage to existing utilities. Any utilities damaged by the Contractor shall be promptly repaired by the Contractor. The Contracting Officer will review and approve any proposed repairs. Any damage to existing utilities will be immediately reported to the Contracting Officer and the Base Commander.

**1.7 CONNECTIONS TO EXISTING UTILITIES**

**1.7.1 General**

Any outage involving disruption of electrical service beyond the site area shall be requested in writing at least ten (10) days in advance of the date requested for the commencement of the outage. The Contractor shall provide a request, detailing the type of outage needed (water, sewer, electrical, steam, etc.), the time needed to perform the work, the reason for the outage, and the known affected facilities.

The Contracting Officer shall be contacted prior to the outage to confirm the time and date. If the Contractor fails to initiate work at the approved time, the Contracting Officer may cancel the approved outage and may direct the Contractor to resubmit a new request. No part of the time lost due to the Contractors failure to properly schedule an outage shall be made the subject of claim for extension of time or for excess costs or damages by the Contractor.

**1.7.1.1 Not used.**

**1.7.1.2 Exterior Night Lighting**

Exterior night lighting shall be provided in conformance with EM-385-1-1 entitled Safety and Health Requirements Manual.

**1.7.2 Existing Underground Utilities**

The Contractor is provided notice that existing utilities may be present in the construction area. The Contractor shall exercise the utmost care in researching locations of existing utility lines by implementing control measures to eliminate, or reduce to a level acceptable to the Contracting Officer, the chance of damaging or destroying existing utilities.

**1.7.2.1 Use of Underground Utility Detecting Device**

Prior to any excavation, a metal and/or cable-detecting device shall be used along the route of the excavation. All underground utilities discovered by this method will be flagged a minimum distance of one-half (1/2) meter on each side of the location.

**1.7.2.2 Hand Excavation**

Hand excavation methods and special supervisory care shall be used between any flagged markers, in areas of known or suspected hazards, and in areas known or suspected to have multiple and/or concentrated utility lines or connections.

**1.7.3 Repair of Damaged Utilities**

The Contractor shall be responsible to repair any utilities damaged by him. The method of repair and schedule for performance of the repair shall be coordinated with, and subject to the approval of, the Contracting Officer. The repair work and any temporary work required to keep the system operational while repairs are being completed, shall be performed at no cost to the Government.

**1.8 NOT USED**

**1.9 NOT USED**

**1.10 ELECTRICITY (CONTRACTOR PROVIDED)**

Electrical service is not available for use under this contract; therefore all electric current required by the Contractor shall be the responsibility of the Contractor, furnished at his own expense. The Contractor shall provide diesel generators to meet his demand requirements. Electricity required for final testing systems shall be furnished by the Contractor. The means of doing so, such as by temporary distribution systems, shall be the responsibility of the Contractor. All temporary connections for electricity shall be subject to the approval of the Contracting Officer and shall comply with Corps of Engineers manual EM 385-1-1 entitled Safety and Health Requirements Manual. All temporary lines shall be furnished, installed, connected and maintained by the Contractor in a workmanlike manner satisfactory to the Contracting Officer. Before final acceptance of systems, or facilities, all temporary connections installed by the Contractor shall be removed at his expense in a manner satisfactory to the Contracting Officer.

## 1.11 WORK OUTSIDE REGULAR HOURS

If the Contractor desires to carry on work outside regular base duty hours, or on holidays (including the following U.S. holidays: New Year's Day, Martin Luther King Jr's Birthday, George Washington's Birthday, Memorial Day, Independence Day, Labor Day, Columbus Day, Veteran's Day, Thanksgiving and Christmas), he shall submit an application to the Contracting Officer. The Contractor shall allow ample time to enable satisfactory arrangements to be made by the Government for inspecting the work in progress. At night, exterior lighting shall be provided in conformance with EM-385-1-1 entitled "Safety and Health Requirements Manual".

## 1.12 SCHEDULING OF WORK IN EXISTING FACILITIES

As soon as practicable, but in any event not later than seven (7) calendar days after award of this task order, the Contractor shall meet in conference with the Contracting Officer, or his duly authorized representatives, to discuss and develop mutual understanding relative to the scheduling of work in and access to the existing facilities where work has to be performed under this contract, so that the Contractor's proposed construction schedule is coordinated with the operating and security requirements of the installation.

## 1.13 SPECIAL FACILITIES AND SERVICES TO BE FURNISHED BY THE CONTRACTOR

The Contractor shall furnish the facilities and services listed in this clause for Corps of Engineers personnel and other persons as designated by the Contracting Officer. All facilities, furnishings, materials, and equipment shall be new when furnished at the site. The Contractor shall fully maintain and repair all facilities, furnishings and equipment listed below. All facilities furnished and/or installed by the Contractor under this clause shall remain the property of the Contractor at the completion of the task order. Facility structures shall be modular or containerized, suitable for easy movement at a later date.

## 1.14 NOT USED

## 1.15 CERTIFICATES OF COMPLIANCE

Any certificates required for demonstrating proof of compliance of materials with specification requirements shall be executed in accordance with Section 01335 SUBMITTAL PROCEDURES FOR DESIGN/BUILD. Each certificate shall be signed by an official authorized to certify in behalf of the manufacturing company involved and shall contain the name and address of the Contractor, the project name and location, description and the quantity of the items involved, and date or dates of shipment or delivery to which the certificates apply. Copies of laboratory test reports submitted with certificates shall contain the name and address of the testing laboratory and the date or dates of the tests to which the report applies. Certification shall not be construed as relieving the Contractor from furnishing satisfactory material.

## 1.16 ACCIDENT PREVENTION

The Contractor shall comply with all applicable Host Country laws and with such additional measures as the Contracting Officer may find necessary in accordance with CONTRACT CLAUSE 52.236-13 entitled ACCIDENT PREVENTION (NOV1991)-ALTERNATE 1 (APR 1984). Applicable provisions of the Corps of Engineers manual entitled Safety and Health Requirements Manual EM 385-1-1 will be applied to all work under this contract. The referenced manual may be obtained from the Contracting Officer at the jobsite or from the Afghanistan Engineer District at Kabul, Afghanistan.

### 1.16.1 Accident Prevention Program

Within fifteen (15) days after award of this task order, and at least ten (10) days prior to the accident prevention pre-work conference, four (4) copies of the Accident Prevention Plan required by the CONTRACT CLAUSE 52.236-13 entitled ACCIDENT PREVENTION (NOV 1991)- ALTERNATE I shall be submitted for review by the Contracting Officer. The Contractor shall not commence physical work at the site until the Accident Prevention Plan (APP) has been reviewed and accepted by the Contracting Officer. The APP shall meet the requirements listed in Appendix "A" of EM385-1-1. The program shall include the following: TAC Form 61 " Accident Prevention Program Hazard Analysis (Activity Hazard Analysis)" fully completed and signed by an executive officer of the company in block No. 13. The Activity Hazard Analysis is a method in which those hazards likely to cause a serious injury or fatality are analyzed for each phase of operations. Corrective action is planned in advance, which will eliminate the hazards. An analysis is required for each new phase of work. On large or complex jobs the first phase may be presented in detail with the submittal of the Accident Prevention Plan rather than presenting the complete analysis. If the plan is to be presented in phases, a proposed outline for future phases must be submitted as a part of the initial Accident Prevention Plan submittal. Accident Prevention Plans will be reviewed for timeliness and adequacy at least monthly with a signature sheet signed and dated documenting that these reviews took place. Copy of company policy statement of Accident Prevention and any other guidance as required by EM 385-1-1, Appendix A.

### 1.16.2 Ground Fault Circuit Interrupter (GFCI) Requirement – Overseas Construction

The Corps of Engineers Health and Safety Manual, EM 385-1-1, section 11.C.05.a. states: "The GFCI device shall be calibrated to trip within the threshold values of 5 ma +/- 1 ma as specified in Underwriters Laboratory (UL) Standard 943." A variance from USACE has been granted allowing 10 ma, in lieu of 5 ma, for overseas activities that use 220 Volts (V)/50 hertz (Hz) electrical power.

### 1.16.3 Temporary Power - Electrical Distribution Boxes

EM 385-1-1 section 11.A.01.a. states, "All electrical wiring and equipment shall be a type listed by a nationally recognized testing laboratory for the specific application for which it is to be used." This includes temporary electrical distribution boxes. Locally manufactured electrical boxes will not be allowed. Only manufactured electrical distribution boxes that meet the European CE requirements, with 10 ma CE type GFCIs installed shall be allowed.

Contractors shall:

a. Make no modifications that might void any CE or manufacturer certification.

b. Test the installed systems to demonstrate that they operate properly and provide the 10 ma earth leakage protection.

c. Ensure GFCIs will have an integral push-to-test function. The testing shall be performed on a regular basis.

d. Check that proper grounding is checked regularly and flexible cords, connectors, and sockets inspected before each use.

## 1.17 HAZARDOUS MATERIALS

Should the Contractor encounter asbestos or other hazardous materials, during the construction period of this contract, he shall immediately stop all work activities in the area where the hazardous material is discovered. The Contractor shall then notify the Contracting Officer; identify the area of danger; and not proceed with work in that area until given approval from the Contracting Officer to continue work activities. Hazardous material is considered to be asbestos, explosive devices, toxic waste, or material hazardous to health and safety. The Contractor shall secure the area from daily traffic until it is safe to resume normal activities.

## 1.18 SPARE PARTS

### 1.18.1 General

The requirements of this clause are in addition to any requirements for the provision of specific spare parts to be provided by the Contractor included in Technical Provisions. The Contractor shall furnish spare parts as directed by the Contracting Officer under the provisions of this clause for all equipment for which O&M data is to be provided under Clause OPERATION AND MAINTENANCE (O&M) DATA of this contract. The term "spare parts" as used herein shall include spare parts, special tools and test equipment.

### 1.18.2 Selection of Spare Parts to be Furnished

The Contractor shall provide master parts lists, recommended spare parts lists and lists of special tools and test equipment as a part of the equipment O&M data required by Clause OPERATION AND MAINTENANCE (O&M) DATA. The master parts list shall include the supplier's price for each part. After review of the lists, the Contracting Officer will select spare parts and furnish written direction to the Contractor indicating quantities and types of spare parts to be furnished by the Contractor. Written directions for spare parts orders may be provided on an incremental basis as reviews of O&M data submitted by the Contractor are completed but will not necessarily be issued in the sequence in which the Contractor submitted the equipment O&M data.

### 1.18.3 Procurement and Delivery of Spare Parts

The Contractor shall procure and be responsible for delivery, receipt, handling, placing in storage, inventory, and turnover to the Contracting Officer all spare parts selected by the Contracting Officer. In addition to the recommended spare parts list required in paragraph SELECTION OF SPARE PARTS TO BE FURNISHED above, the Contractor is responsible to have one (1) year supply of manufacturer's recommended spare parts on site ready to turn over to the Contracting Officer at the time of acceptance of the facility.

#### 1.18.3.1 Shipment and Delivery

The Contractor shall be responsible for the shipment and delivery of spare parts to the location on or near the site in Afghanistan as selected by the Contracting Officer. The Contractor shall provide all manpower and equipment required to receive and place into designated storage areas all spare parts purchased under this clause. The Contractor shall give the Contracting Officer thirty (30) calendar days notice of arrival at the site of the first shipment.

#### 1.18.3.2 Turnover of Spare Parts

The Contractor shall notify the Contracting Officer seventy-two (72) hours prior to delivery of spare parts to the designated storage area. The Contractor and the Contracting Officer will perform a joint inventory of the spare parts and the spare parts will be turned over to the Contracting Officer. Spare parts purchased under this clause shall not be used by the Contractor.

#### 1.18.3.3 Parts and Package Identification

Prior to shipment from point of purchase, each spare part shall be tagged or otherwise marked or labeled. Such labeling may be placed or affixed to the container, box or packaging in which spare parts are located when it is not feasible to place or affix such labeling directly on each spare part. Tags or labels shall include, but not necessarily be limited to; part number, description, parent equipment name and number location, project and/or other data as directed by the Contracting Officer.

**1.18.3.4 Preservation and Packaging Instruction**

a. Items ordered under this contract shall be preserved and packed for a minimum of three (3) years shelf life storage. All items shall be individually packaged except when the manufacturer specifies that the items are to be used in sets. Appropriate identification labels must be affixed to the items protective box or package. After the spare parts are packaged, the manufacturer shall weigh the spare parts and packaging and place the weight and size of the packaged container on the label with other information as outlined herein. Each item, not normally identified with manufacturer's name and part number, shall have an appropriate label affixed to it with manufacturer's name and part number.

b. Machined spare parts shall be lubricated or coated in order to withstand extensive periods of storage in a highly corrosive atmosphere.

c. Large items (greater than 50 lbs., or larger than one cubic foot) shall be packaged in waterproof wooden boxes and properly braced. Cushioning shall be used to prevent damage to the item and to the packaging material.

d. Solid state components, such as diodes, transistors, integrated circuits or equipment consisting of such parts that can be damaged as a result of static electricity and other stray electro-magnetic fields shall be packaged in heat-sealed, aluminum foil, laminated, flexible packages.

e. All other spare parts shall be packaged in heat sealed plastic bags or wrap. Delicate and more fragile items such as test equipment shall be cushioned or wrapped with transparent bubble wrap material prior to being inserted into the plastic package.

**1.18.4 Warranty**

All spare parts provided by the Contractor under this clause are subject to the general warranty clauses of this contract.

**1.18.5 Payments for Spare Parts**

Payments for spare parts ordered under the paragraph entitled "Selection of Spare Parts To Be Furnished" will be made under the work item of the Work Breakdown Sheet entitled "Spare Parts". Payments for spare parts specifically required elsewhere in this contract shall be considered as part of those equipment costs and shall be included in other payment items as appropriate. Payments for spare parts ordered under this clause shall be based on the invoice price (FOB supplier) plus certified invoice price of surface shipment to the site in Afghanistan. The invoice price (FOB supplier) shall include the separately listed cost for preservation and packaging by the manufacturer as specified herein. The Contractor shall provide invoices and any additional backup, which may be required to demonstrate that the invoices presented represent the cost of spare parts, preservation and packaging, and cost of surface shipment to the site. Payment for handling, delivery, inventory, turnover, customs, overhead or profit shall not be paid or allowed under this Contract Provision, and shall be included in the cost for installation of this equipment under the other appropriate payment items of this contract. Price increases over prices furnished under paragraph SELECTION OF SPARE PARTS TO BE FURNISHED shall be fully substantiated. Payment for spare parts will be made after the spare parts have been accepted at the site by the Contracting Officer. If the total payments under the work item entitled "Spare Parts" does not reduce the balance of this work item to zero, the remaining balance will be deducted from the final contract amount. If orders exceed the work item entitled "Spare Parts", a modification for equitable adjustment will be issued in accordance with Contract Clause 52.243-4 entitled CHANGES. Payments for spare parts ordered under this clause shall constitute full payment for all cost of the spare parts and associated cost of preservation and packaging, and cost of surface shipment to the site. Other ancillary costs shall be included by the Contractor under the other appropriate work items of this contract and no additional cost except as provided herein will be allowed.

## 1.19 OPERATION AND MAINTENANCE (O&M) DATA

### 1.19.1 General

The requirements contained herein are in addition to all shop drawings submission requirements stated in other sections of the specifications. The Contractor shall include the provisions for all items required under this clause in all purchase orders and sub-contract agreements. Submittals required hereinafter will not relieve the Contractor of any responsibilities under the Warranty of Construction Provisions of this contract or under the various Guarantee Clauses of the Technical Provisions.

### 1.19.2 Submittals

The Contractor shall submit all items requiring submission of O&M data under this and other sections of these specifications in accordance with Section 01335 SUBMITTAL PROCEDURES FOR DESIGN/BUILD of the specifications.

### 1.19.3 Operation and Maintenance (O&M) Data

The Contractor shall furnish operation and maintenance manuals for all facilities constructed under this contract. The manuals shall be loose leaf, indexed and shall consist of manufacturer's brochures, manufacturer's operation and maintenance manuals, service and repair manuals, catalogs, service bulletins, instruction charts, diagrams, other information as necessary to support the operation and maintenance of the end items of equipment, assemblies and systems. Each type of facility (housing, barracks, mosque, etc.) shall be covered by a separate manual (or manuals) consisting of all data pertaining to the equipment and/or systems within that facility. Identical equipment within a single major system shall require only one submittal of data. The Contractor shall furnish all O&M manuals to the Contracting Officer not less than thirty (30) calendar days prior to contract completion. Required number of submittals (number of sets) shall be as specified in Section 01335 SUBMITTAL PROCEDURES FOR DESIGN/BUILD.

### 1.19.4 Recommend Spare Parts List

The Contractor shall furnish a recommended spare parts list containing equipment manufacturers' recommendations for five (5) years; two (2) years and one (1) year spare parts stock levels in Afghanistan. Current unit price and effective date, lead time, shelf life for each individual part, and total cost of all recommended parts shall be furnished.

### 1.19.5 Supplemental Submittals of Data

After initial submittal of O&M manuals and until final acceptance of all equipment, the Contractor shall prepare and deliver to the Contracting Officer supplemental technical data as previously described for all changes, modifications, revisions and substitutions to equipment and components. For equipment or systems introduced into the contract under change order, or modified by change order, supplemental data shall be furnished within forty-five (45) calendar days after issuance of the change order. The supplemental data furnished shall be properly prepared and identified for insertion into the O&M manuals.

### 1.19.6 Framed Instructions for Systems

Approved wiring and control diagrams showing the complete layout of the entire system, including equipment, piping, valves and control sequence, framed under glass or in approved laminated plastic, shall be posted, where applicable, in all mechanical equipment rooms. In addition, detailed operating instructions explaining safe starting and stopping procedures for all systems shall be prepared in typed form along with the inspections required to insure normal safe operations. The instructions shall be framed as specified above for the wiring and control diagrams and posted beside the diagram. Proposed diagrams, instructions, and other sheets shall be submitted for approval prior to posting. Operating

instructions shall be posted before acceptance testing of the systems and verified during acceptance testing.

### 1.19.7 Additional Submittals/Resubmittals

The Contracting Officer reserves the right to determine whether the above specified information, as furnished by the Contractor, is adequate and complete and to require such additional submittals by the Contractor as necessary to insure that adequate information has been furnished to provide the satisfactory operation and maintenance of the various items of equipment and to fulfill the intent of the specifications. Additional submittals or resubmittals supplementing incorrect or incomplete data shall be made within thirty (30) calendar days after receiving notice by the Contracting Officer. All costs arising from these resubmissions shall be borne by the Contractor.

## 1.20 Not Used

## 1.21 CONTRACTOR FURNISHED EQUIPMENT LISTS

The Contractor shall furnish a list of all items, other than integral construction type items, furnished under the contract. Items such as furniture, drapes, rugs, vehicles, office machines, appliances, etc., shall fall under this category. The Contractor's list shall describe the item; give the unit price and total quantities of each. Model and serial numbers for equipment shall be provided when applicable. The Contractor shall keep an up-to-date register of all covered items and make this information available to the Contracting Officer at all times. Prior to acceptance, the Contractor shall submit the complete register to the Contracting Officer.

## 1.22 TIME EXTENSIONS FOR UNUSUALLY SEVERE WEATHER

### 1.22.1 General

This provision specifies the procedure for determination of time extensions for unusually severe weather in accordance with the Contract Clause 52.249-10 entitled DEFAULT (FIXED-PRICE CONSTRUCTION) APR 1984. The listing below defines the anticipated monthly unusually severe weather for the contract period and is based on National Oceanic and Atmospheric Administration (NOAA) or similar data for the geographic location of the project. The schedule of anticipated unusually severe weather will constitute the baseline for determining monthly weather time evaluations. Upon award of this task order and continuing throughout the contract each month, actual unusually severe weather days will be recorded on a calendar day basis (including weekends and holidays) and compared to the monthly anticipated unusually severe weather in the schedule below. The term "actual unusually severe weather days" shall include days actually impacted by unusually severe weather. The Contractor's schedule must reflect the anticipated unusually severe weather days on all weather dependent activities.

MONTHLY ANTICIPATED UNUSUALLY SEVERE WEATHER CALENDAR DAYS

| | |
|---|---|
| January | 4 Days |
| February | 2 Days |
| March | 2 Days |
| April thru December | 0 Days |

### 1.22.2 Time Extensions

The number of actual unusually severe weather days shall be calculated chronologically from the first to the last day in each month. Unusually severe weather days must prevent work for fifty percent (50%) or more of the Contractor's workday and delay work critical to the timely completion of the project. If the number of actual unusually severe weather days exceeds the number of days anticipated in the

paragraph above, the Contracting Officer will determine whether the Contractor is entitled to a time extension. The Contracting Officer will convert any qualifying delays to calendar days and issue a modification in accordance with the Contract Clause 52.249-10 entitled DEFAULT (FIXED-PRICE CONSTRUCTION) APR 1984.

## 1.23 STANDARDIZATION

Where two or more items of the same type or class of product, system or equipment furnished in this project are required, the units shall be products of the same manufacturer and shall be interchangeable when of the same size, capacity, performance characteristics, and rating. The only exception to this requirement is where the items are interchangeable due to conformance with industry standards (valves, fittings, etc.); they need not be by the same manufacturer. This requirement applies to all manufactured items in the project that normally require repair or replacement during the life of the equipment.

## 1.24 COMPLIANCE WITH HOST COUNTRY RULES AND CUSTOMS

The laws of Host Country may prohibit access to certain areas of the country that are under military control. The Contractor shall furnish the Contracting Officer the names of personnel, type, and amounts of equipment, dates and length of time required at the site, and the purpose of entering the host country. It is understood that areas to which rights of entry are provided by the Host Government are to be used only for work carried out under the contract and no destruction or damages shall be caused, except through normal usage, without concurrence of the Host Government.

### 1.24.1 Contractor's Responsibilities

The following items are the sole responsibility of the Contractor to investigate, estimate as to cost, and assume the risk, as normally encountered by Contractors. The Contractor shall be responsible for determining the effect of the following on his own cost of performance of the contract and for including sufficient amount in the contract price:

a. Official language and type of accounts required to satisfy the officials of the Local Government.

b. Entry and exit visas, residence permits, and residence laws applicable to aliens. This includes any special requirements of the Host Government, including those required by local Labor Offices, which the Contractor may have to fulfill before an application for a regular block of visas will be accepted.

c. Passports, health and immunization certificates, and quarantine clearance.

d. Compliance with local labor and insurance laws, including payment of employer's share of contribution, collecting balance from employee and paying into insurance funds.

e. Strikes, demonstrations and work stoppage.

f. Collection through withholding and payment to local Government, of any Host Country income tax on employees subject to tax.

g. Arranging to perform work in the Host Country, to import personnel, to employ non-indigenous labor, to receive payments and to remove such funds from the country.

h. Operating under local laws, practices, customs and controls, and with local unions, in connection with hiring and firing, mandatory wage scales, vacation pay, severance pay, overtime, holiday pay, 7th day of rest, legal notice or pay in lieu thereof for dismissal of employees, slowdown and curtailed schedules during religious holidays and ratio of local labor employed in comparison to others.

i. Possibility of claims in local bureaus, litigation in local courts, or attachment of local bank accounts.

j. Compliance with workmen's compensation laws and contributions into funds. Provisions of necessary medical service for Contractor employees.

k. Special license required by the local Government for setting up and operating any manufacturing plant in the Host Country, e.g. concrete batching, precast concrete, concrete blocks, etc.

l. Sales within the host country of Contractor-owned materials, and equipment.

m. Special licenses for physicians, mechanics, tradesmen, drivers, etc.

n. Identification and/or registration with local police of imported personnel.

o. Stamp tax on documents, payments and payrolls.

p. Base passes for permanent staff, day laborers, motor vehicles, etc.

q. Compliance with all customs and import rules, regulations and restrictions, including, but not limited to, local purchase requirements.

**1.25 Not used.**

**1.25.1 Employee Identification**

The Contractor shall be responsible for furnishing to each employee and for requiring each employee engaged on the work, to display identification as approved and directed by the Contracting Officer. Prescribed identification shall immediately be delivered to the Contracting Officer for cancellation upon release of any employee. When required, the Contractor shall obtain and provide fingerprints of persons employed on the project. Contractor and subcontractor personnel shall wear identifying markings on hard hats clearly identifying the company for whom the employee works.

**1.25.2 Identification of Contractor Vehicles**

The Contractor shall be responsible for requiring each vehicle engaged in the work to display permanent vehicular identification as approved and directed by the Contracting Officer. A valid license plate shall be displayed at all times. Contractor vehicles operated on Government property shall be maintained in a good state of repair, shall be insured, and shall be registered in accordance with Afghan Law.

**1.25.3 Security Plan**

The Contractor shall submit to the Contracting Officer, within ten (10) calendar days after award of this task order, his proposed personnel and vehicular access plan. This plan shall cover all elements for issuance of the access passes, safeguarding of unissued passes, construction security operations, lost passes, temporary vehicle passes, and collection of passes for employee's and vehicles on 1)- temporary absence; 2)- termination or release; and 3)- termination or completion of contract. The plan shall address in detail the contractors proposed procedures, and organization necessary to produce and maintain effective security within the contract limits twenty-four (24) hours a day seven (7) days a week.

**1.26 RADIO TRANSMITTER RESTRICTIONS**

To preclude accidental actuation of sensitive electronic equipment, the Contractor shall not use radio-transmitting equipment without prior approval of the Contracting Officer.

**1.27 Not used.**

## 1.28 PUBLIC RELEASE OF INFORMATION

### 1.28.1 Prohibition

There shall be no public release of information or photographs concerning any aspect of the materials or services relating to this bid, contract, purchase order, or other documents resulting there from without the prior written approval of the Contracting Officer.

### 1.28.2 Subcontract and Purchase Orders

The Contractor agrees to insert the substance of this clause in all purchase orders and subcontract agreements issued under this contract.

-- End of Section --

# SPECIFICATION SECTION 01312

# QUALITY CONTROL SYSTEM (QCS)

## PART 1: GENERAL

### 1.1 GENERAL

The Government will use the Resident Management System for Windows (RMS) to assist in its monitoring and administration of this contract. The Contractor shall use the Government-furnished Construction Contractor Module of RMS, referred to as QCS, to record, maintain, and submit various information throughout the contract period. The Contractor module, user manuals, updates, and training information can be downloaded from the RMS web site: the Contractor can obtain the current address from the Government. This joint Government-Contractor use of RMS and QCS will facilitate electronic exchange of information and overall management of the contract. QCS provides the means for the Contractor to input, track, and electronically share information with the Government in the following areas:

Administration
Finances
Quality Control

Submittal Monitoring
Scheduling
Import/Export of Data

#### 1.1.1 Correspondence and Electronic Communications

For ease and speed of communications, both Government and Contractor will, to the maximum extent feasible, exchange correspondence and other documents in electronic format. Correspondence, pay requests and other documents comprising the official contract record shall also be provided in paper format, with signatures and dates where necessary. Paper documents will govern, in the event of discrepancy with the electronic version.

#### 1.1.2 Other Factors

Particular attention is directed to specifications “SUBMITTAL PROCEDURES”, “CONTRACTOR QUALITY CONTROL”, "PROJECT SCHEDULE", and Contract Clause, "Payments", which have a direct relationship to the reporting to be accomplished through QCS. Also, there is no separate payment for establishing and maintaining the QCS database; all costs associated therewith shall be included in the contract pricing for the work.

### 1.2 QCS SOFTWARE

QCS is a Windows-based program that can be run on a stand-alone personal computer or on a network. Prior to the Pre-Construction Conference, the Contractor shall be responsible to download, install and use the latest version of the QCS software from the Government's RMS Internet Website. Any program updates of QCS will be made available to the Contractor via the Government RMS Website as they become available. It shall be the responsibility of the contractor to maintain the QCS software and install updates as they become available.

### 1.3 SYSTEM REQUIREMENTS

The following listed hardware and software is the minimum system configuration that the Contractor shall

have to run QCS. No separate payment shall be made for updating or maintaining the necessary hardware configurations necessary to run QCS:

Hardware

IBM-compatible PC with 1000 MHz Pentium or higher processor
256+ MB RAM for workstation / 512+ MB RAM for server
1 GB hard drive disk space for sole use by the QCS system
Digital Video Disk (DVD)-Compact Disk (CD) Reader-Writer (RW/ROM)
Monitor with a resolution of AT LEAST 1024x768, 16bit colors
Mouse or other pointing device
Windows compatible printer. (Laser printer must have 4 MB+ of RAM)
Connection to the Internet, minimum 56k BPS

Software

MS Windows 2000 or higher
QAS-Word Processing software: MS Word 2000 or newer
Internet browser supporting HTML 4.0 or higher
Electronic mail (E-mail) MAPI compatible
Virus protection software regularly upgraded with all issued manufacturer's updates

## 1.4 RELATED INFORMATION

### 1.4.1 QCS User Guide

After contract award, the Contractor shall download instructions for the installation and use of QCS from the Government RMS Internet Website; the Contractor can obtain the current address from the Government. In case of justifiable difficulties, the Government will provide the Contractor with a CD-ROM containing these instructions.

### 1.4.2 Contractor Quality Control (CQC) Training

The use of QCS will be discussed with the Contractor's QC System Manager during the mandatory CQC Training class. The government will provide QCS training if requested by the contractor.

## 1.5 CONTRACT DATABASE

Prior to the pre-construction conference, the Government shall provide the Contractor with basic contract award data to use for QCS. The Government will provide data updates to the Contractor as needed, generally by files attached to E-mail or via CD-ROM. These updates will generally consist of submittal reviews, correspondence status, QA comments, and other administrative and QA data.

## 1.6 DATABASE MAINTENANCE

The Contractor shall establish, maintain, and update data for the contract in the QCS database throughout the duration of the contract. Data updates to the Government shall be submitted via either E-mail or electronic media with printed/file attachments, e.g., daily reports, schedule updates, payment requests. If permitted by the Contracting Officer. The QCS database typically shall include current data on the following items:

### 1.6.1 Administration

#### 1.6.1.1 Contractor Information

The database shall contain the Contractor's name, address, telephone numbers, management staff, and

other required items. Within 14 calendar days of receipt of QCS software from the Government, the Contractor shall deliver Contractor administrative data in electronic format via E-mail.

1.6.1.2 Subcontractor Information

The database shall contain the name, trade, address, phone numbers, and other required information for

all subcontractors. A subcontractor must be listed separately for each trade to be performed. Each subcontractor/trade shall be assigned a unique Responsibility Code, provided in QCS. Within 14 calendar days of receipt of QCS software from the Government, the Contractor shall deliver subcontractor administrative data in electronic format via E-mail.

1.6.1.3 Correspondence

All Contractor correspondence to the Government shall be identified with a serial number. Correspondence initiated by the Contractor's site office shall be prefixed with "S". Letters initiated by the Contractor's home (main) office shall be prefixed with "H". Letters shall be numbered starting from 0001. (e.g., H-0001 or S-0001). The Government's letters to the Contractor will be prefixed with "C".

1.6.1.4 Equipment

The Contractor's QCS database shall contain a current list of equipment planned for use or being used on the jobsite, including the most recent and planned equipment inspection dates.

1.6.1.5 Management Reporting

QCS includes a number of reports that Contractor management can use to track the status of the project. The value of these reports is reflective of the quality of the data input, and is maintained in the various sections of QCS. Among these reports are: Progress Payment Request worksheet, QA/QC comments, Submittal Register Status, Three-Phase Inspection checklists.

1.6.2 Finances

1.6.2.1 Pay Activity Data

The QCS database shall include a list of pay activities that the Contractor shall develop in conjunction with the construction schedule. The sum of all pay activities shall be equal to the total contract amount, including modifications. Pay activities shall be grouped by Contract Line Item Number (CLIN), and the sum of the activities shall equal the amount of each CLIN. The total of all CLINs equals the Contract Amount.

1.6.2.2 Payment Requests

All progress payment requests shall be prepared using QCS. The Contractor shall complete the payment request worksheet and include it with the payment request. The work completed under the contract, measured as percent or as specific quantities, shall be updated at least monthly. After the update, the Contractor shall generate a payment request report using QCS. A signed paper copy of the approved payment request is also required, which shall govern in the event of discrepancy with the electronic version.

1.6.3 Quality Control (QC)

QCS provides a means to track implementation of the 3-phase QC Control System, prepare daily reports, identify and track deficiencies, document progress of work, and support other contractor QC

requirements. The Contractor shall maintain this data on a daily basis. Entered data will automatically output to the QCS generated daily report.

1.6.3.1 Daily Contractor Quality Control (CQC) Reports.

QCS includes the means to produce the Daily CQC Report. The Daily CQC Report generated by QCS shall be the Contractor's official report. Data from any supplemental reports by the Contractor shall be summarized and consolidated onto the QCS-generated Daily CQC Report. Daily CQC Reports shall be submitted as required by specification 01451 “CONTRACTOR QUALITY CONTROL”.

1.6.3.2 Deficiency Tracking.

The Contractor shall use QCS to track deficiencies. Deficiencies identified by the Contractor will be numerically tracked using QC punch list items. The Contractor shall maintain a current log of its QC punch list items in the QCS database. The Government will log the deficiencies it has identified using its QA punch list items. The Government's QA punch list items will be included in its export file to the Contractor. The Contractor shall regularly update the correction status of both QC and QA punch list items.

1.6.3.3 Three-Phase Control Meetings

The Contractor shall maintain scheduled and actual dates and times of preparatory and initial control meetings in QCS.

1.6.3.4 Accident/Safety Tracking.

The Government will issue safety comments, directions, or guidance whenever safety deficiencies are observed. The Government's safety comments will be included in its export file to the Contractor. The Contractor shall regularly update the correction status of the safety comments. In addition, the Contractor shall utilize QCS to advise the Government of any accidents occurring on the jobsite. This brief supplemental entry is not to be considered as a substitute for completion of mandatory reports.

1.6.3.5 Features of Work

The Contractor shall include a complete list of the features of work in the QCS database. A feature of work may be associated with multiple pay activities. However, each pay activity (see subparagraph "Pay Activity Data" of paragraph "Finances") will only be linked to a single feature of work.

1.6.3.6 QC Requirements

The Contractor shall develop and maintain a complete list of QC testing, transferred and installed property, and user training requirements in QCS. The Contractor shall update all data on these QC requirements as work progresses, and shall promptly provide this information to the Government via QCS.

1.6.4 Submittal Management

The Contractor shall maintain a complete list of all submittals, including completion of all data columns. Dates on which submittals are received and returned by the Government will be included in its export file to the Contractor. The Contractor shall use QCS to track and transmit all submittals. ENG Form 4025, submittal transmittal form, and the submittal register update, ENG Form 4288, shall be produced using QCS. RMS will be used to update, store and exchange submittal registers and transmittals, but will not be used for storage of actual submittals.

### 1.6.5 Schedule

The Contractor shall develop a construction schedule consisting of pay activities, in accordance with Specification Section Project Schedule. This schedule shall be input and maintained in the QCS database either manually or by using the Standard Data Exchange Format (SDEF). The updated schedule data shall be included with each pay request submitted by the Contractor.

### 1.6.6 Requests for Information (RFI)

The Contractor shall use the two-way RFI system contained in QCS for tracking all RFI's generated during the contract. Hard copies of all RFI's shall be provided to the government, and will govern in the event of a discrepancy between electronic and printed mediums.

### 1.6.7 Import/Export of Data

QCS includes the ability to export Contractor data to the Government and to import submittal register and other Government-provided data, and schedule data using SDEF.

## 1.7 IMPLEMENTATION

Contractor use of QCS as described in the preceding paragraphs is mandatory. The Contractor shall ensure that sufficient resources are available to maintain its QCS database, and to provide the Government with regular database updates. QCS shall be an integral part of the Contractor's management of quality control.

## 1.8 DATA SUBMISSION VIA COMPUTER DISKETTE OR CD-ROM

The Government-preferred method for Contractor's submission of updates, payment requests, correspondence and other data is by E-mail with file attachment(s). For locations where this is not feasible, the Contracting Officer may permit use of computer diskettes or CD-ROM for data transfer. Data on the disks or CDs shall be exported using the QCS built-in export function.

## 1.9 MONTHLY COORDINATION MEETING

The Contractor shall update the QCS database each workday. At least monthly, the Contractor shall generate and submit an export file to the Government with schedule update and progress payment request. As required in Contract Clause "Payments", at least one week prior to submittal, the Contractor shall meet with the Government representative to review the planned progress payment data submission for errors and omissions. The Contractor shall make all required corrections prior to Government acceptance of the export file and progress payment request. Payment requests accompanied by incomplete or incorrect data submittals will be returned. The Government will not process progress payments until an acceptable QCS export file is received.

## 1.10 NOTIFICATION OF NONCOMPLIANCE

The Contracting Officer will notify the Contractor of any detected noncompliance with the requirements of this specification. The Contractor shall take immediate corrective action after receipt of such notice. Such notice, when delivered to the Contractor at the work site, shall be deemed sufficient for the purpose of notification.

-- End of Section --

# SECTION 01321

# PROJECT SCHEDULE

## PART 1 GENERAL

### 1.1 SUBMITTALS

The following shall be submitted for Government approval in accordance with Section 01335 SUBMITTAL PROCEDURES: SD-07 Schedules Project Schedule. Horizontal Bar Chart and Periodic Payment Request Updates. Projected Earnings Curve and Periodic Payment Request Updates. Revisions to the Project Schedule and Projected Earnings Curve for Modifications Issued to this Contract shall be coordinated with the Contracting Officer.

## PART 2 PRODUCTS (Not Applicable)

## PART 3 EXECUTION

### 3.1 GENERAL

The Contractor shall furnish a Project Schedule as described below. The scheduling of construction shall be the responsibility of the Contractor. Contractor management personnel shall actively participate in its development. Subcontractors and suppliers working on the project should also contribute in developing and maintaining an accurate Project Schedule. The approved Project Schedule shall be used to measure the progress of the work, to aid in evaluating time extensions, and to provide the basis of all progress payments.

### 3.2 BASIS FOR PAYMENT

The schedule shall be the basis for measuring Contractor progress. Lack of an approved schedule or scheduling personnel shall result in an inability of the Contracting Officer to evaluate Contractor progress for the purposes of payment. Failure of the Contractor to provide all information, as specified below, shall result in the disapproval of the entire Project Schedule submission and the inability of the Contracting Officer to evaluate Contractor progress for payment purposes. In the case where Project Schedule revisions have been directed by the Contracting Officer and those revisions have not been included in the Project Schedule, then the Contracting Officer may hold retainage up to the maximum allowed by contract, each payment period, until revisions to the Project Schedule have been made.

### 3.3 PROJECT SCHEDULE

#### 3.3.1 Schedule of Construction

Within seven (7) calendar days after award of the task order, the Contractor shall prepare and submit a Construction Schedule to the Contracting Officer for approval. This schedule shall address each payment line item and/or sub-line item listed in the Proposal Schedule separately.

#### 3.3.2 Non-Compliance

Failure of the Contractor to comply with the requirements of the Contracting Officer shall be grounds for determination by the Contracting Officer that the Contractor is not prosecuting the work with sufficient diligence to ensure completion within the time specified in the contract. Upon making this determination, the Contracting Officer may terminate the Contractor's right to proceed with the work, or any separable part of it, in accordance with the default terms of this contract.

#### 3.3.3 Horizontal Bar Chart

The required schedule shall utilize an automated scheduling program and shall be in the form of a horizontal bar chart. The line or sub-line item schedule of activities shall be listed down the left side of the page. A time scale shall run across the bottom of the page. Each work item shall be represented by a bar starting with the schedule start date and running continuously to the completion date.

**3.3.4 Cost**

Listed with each work item shall be a corresponding cost representing the total cost, such as material, labor, equipment, and overhead associated with that item. The total cost of the work items shall be equal to the Bid Price for that sub-line item of the Proposal Schedule.

**3.3.5 Scheduled Project Completion**

The schedule interval shall extend from Notice-To-Proceed to the contract completion date.

**3.3.6 Projected Earning Curve**

Submitted with the Construction Schedule shall be a Projected Earning Curve. The Projected Earning Curve is a plot of the Contractor's earnings on the vertical axis and the contract duration on the horizontal axis. The earnings figure shall relate to the complete value of the contract and need not reflect each facility separately.

**3.3.7 Construction Schedule**

The Construction Schedule shall be on one page with a maximum dimension of 90 cm by 120 cm. The Contractor shall submit the Projected Earnings Curve on the same page. The initial submittal shall include one (1) reproducible and four (4) copies, one (1) copy of which will be returned to the Contractor when approved.

**3.3.8 Submission With Partial Payment Estimate**

Each time the Contractor submits a payment request under this contract he shall also submit three (3) copies of the Bar Chart. The Bar Chart shall be annotated by indicating the percent complete for each activity directly on the bar. The Projected Earnings Curve shall be annotated by plotting actual earnings versus time on the same graph. Those work items reflecting performance which is behind schedule by fifteen (15) calendar days or more shall be fully explained in detail giving the reason for delay and the Contractor's plan for timely completion within the schedule.

**3.3.9 Modifications**

The Construction Schedule and Projected Earning Curve shall be revised to reflect any and all modifications issued to this contract as they are issued. Format and numbers of copies as defined in paragraph CONSTRUCTION SCHEDULE shall be submitted for approval by the Contracting Officer.

**3.4 PERIODIC PROGRESS MEETINGS**

Progress meetings to discuss payment shall include a monthly on-site meeting or shall be conducted at other regular intervals mutually agreed to at the preconstruction conference. During this meeting the Contractor shall describe, on an activity-by-activity basis, all proposed revisions and adjustments to the project schedule required to reflect the current status of the project. The Contracting Officer will approve activity progress, proposed revisions, and adjustments as appropriate.

**3.4.1 Update Submission Following Progress Meeting**

A complete update of the project schedule containing all approved progress, revisions, and adjustments, based on the regular progress meeting, shall be submitted not later than four (4) working days after the monthly progress meeting.

**3.4.2 Progress Meeting Contents**

Update information, including Actual Start Dates, Actual Finish Dates, Remaining Durations, and Cost to Date, shall be subject to the approval of the Contracting Officer.

**3.4.3 Earnings Report**

A compilation of the Contractor's Total Earnings on the project from the Notice-to-Proceed until the most recent Monthly Progress Meeting. This report shall reflect the Earnings of specific activities based on the agreements made in the field and approved between the Contractor and the Contracting Officer at the most recent Monthly Progress Meeting. Provided that the Contractor has provided a complete schedule update, this report shall serve as the basis of determining Contractor Payment. This report shall: sum all activities and provide a percent complete by individual activity and total project percent complete. The report shall contain, for each activity: activity identification, activity description, original budgeted amount, total quantity, quantity to date, percent complete (based on cost), and earnings to date.

**3.4.4 Cost Completion**

The earnings for each activity started shall be reviewed. Payment shall be based on earnings for each in-progress or completed activity. Payment for individual activities shall not be made for work that contains quality defects. A portion of the overall project amount may be retained based on delays of activities.

**3.4.5 Network Analysis System**

The Contractor may, as an option, submit to the Contracting Officer for approval, a time related network analysis in lieu of the previously specified bar chart.

**-- End of Section --**

# SECTION 01335

# SUBMITTAL PROCEDURES

## PART 1 GENERAL

Work required for this contract will include the preparation of drawings as required to site adapt the design provided in the RFP to the specific conditions present at individual construction sites. Collectively, these drawings will be referred to as site-specific submittals and will be delivered to the Government according to the schedule provided in Section 01010 - Scope of Work. Generally, the contractor will not be required to submit a design analysis and calculations to accompany the drawings, however the Government may request supporting documentation for site specific drawings as required.

### 1.1 REFERENCE

The publication listed below forms a part of this specification to the extent referenced. The publication is referenced to in the text by basic designation only.

CONSTRUCTION SPECIFICATIONS INSTITUTE

Manual of Practice
Construction Specifications Institute
http://www.csinet.org/s_csi/index.asp
601 Madison Street
Alexandria, Virginia
22314-1791

NATIONAL INSTITUTE OF BUILDING SCIENCES (NIBS)

Unified Master Reference List (UMRL)
National Institute of Building Sciences
1090 Vermont Avenue, NW, Suite 700
Washington, DC 20005-4905
Email: nibs@nibs.org
FAX: (202) 289-1092
Tele: (202) 289-7800

AFGHANISTAN ENGINEER DISTRICT

AFGHANISTAN ENGINEER DISTRICT
http://www.aed.usace.army.mil
U.S. Army Corps of Engineers
Attn.: Qalaa House
APO AE 09356

### 1.2 SUBMITTAL CLASSIFICATION

Submittals are classified as follows:

1.2.1 DESIGN SUBMITTALS

Contractor Furnished design submittals are the various design documents which primarily consist of specifications, drawings and design analysis and calculations. The Contractor shall not begin construction work on any feature of the design that requires submittal of a drawing or specification until the Government has reviewed any modifications to the design documents provided in the contract and has cleared it for construction. Clearance for construction shall not be construed as meaning Government approval. The Contractor is responsible for reporting any errors or omissions in the design documents provided in this contract prior to beginning construction work on that feature of the project.

1.2.2 CONSTRUCTION SUBMITTALS

1.2.2.1 Contractor Furnished Government Approved Construction Submittals

Government approved construction submittals are primarily related to plans (Contractor Quality Control, Accident Prevention, Resident Management System, Area Use, etc.) schedules (Project Schedule/Network Analysis), and certificates of compliance. They may also include proposed variations to approved design documents in accordance with the paragraph entitled "VARIATIONS".

1.2.2.2 For Information Only Construction Submittals (FIO)

All submittals not requiring Designer of Record or Government approval will be for information only.

## 1.3 SUBMITTAL CERTIFICATION

The CQC organization shall be responsible for certifying that all submittals and deliverables have been reviewed in detail for completeness, are correct, and are in strict conformance with the contract drawings, specifications, and reference documents.

1.3.1 Effective Quality Control System

The Contractor is responsible for quality control and shall establish and maintain an effective quality control system in compliance with Contract Clause 52.236-21 SPECIFICATIONS AND DRAWINGS FOR CONSTRUCTION - ALTERNATE I and specification section 01451 CONTRACTOR QUALITY CONTROL.

1.3.1.1 Organizational Responsibility

The quality control system shall cover all design, construction, subcontractor, manufacturer, vendor, and supplier operations at any tier, both onsite and offsite.

1.3.1.2 CQC System Manager Review and Approval

Prior to submittal, all items shall be checked and approved by the Contractor's Quality Control (CQC) System Manager. If found to be in strict conformance with the contract requirement, each item shall be stamped, signed, and dated by the CQC System Manager. Copies of the CQC organizations review comments indicating action taken shall be included within each submittal.

1.3.1.3 Determination of Compliance

Each submittal shall be complete and in sufficient detail to allow ready determination of compliance with contract requirements by the Contracting Officer. The contractor shall submit all required documentation with submittals. The U.S. Army Corps of Engineer (USACE) will not accept partial submittals.

1.3.2 Responsibility for Errors or Omissions

It is the sole responsibility of the Contractor to ensure that submittals do or do not comply with the contract documents. Government review, clearance for construction, or approval by the Contracting Officer shall not relieve the Contractor from responsibility for any errors or omissions in such drawings, nor from responsibility for complying with the requirements of this contract.

1.3.2.1 Government Review

Government review, clearance for construction, or approval of post design construction submittals shall not be construed as a complete check, but will indicate only that the general method of construction, materials, detailing and other information are satisfactory.

1.3.3 Substitutions

After design submittals have been reviewed and cleared for construction by the Contracting Officer, no resubmittal for the purpose of substituting materials or equipment will be considered unless justified as indicated in the paragraph entitled VARIATIONS.

1.3.4 Additional Submittals

In conjunction with Contract Clause 52.236-5 MATERIAL AND WORKMANSHIP. The Contracting Officer may request submittals in addition to those specified when deemed necessary to adequately describe the work.

1.3.5 Untimely and Unacceptable Submittals

If the Contractor fails to submit submittals in a timely fashion, or repetitively submits submittals that are incomplete or not in strict conformance with the contract documents, no part of the time lost due to such actions shall be made the subject of claim for extension of time or for excess costs or damages by the Contractor.

1.3.6 Stamps

Stamps shall be used by the Contractor on all design and post design construction submittals to certify that the submittal meets contract requirements and shall be similar to the following:

Contractor (Firm Name)
Contract Number
Contract Name

I certify that this submittal accurate, is in strict conformance with all contract requirements, has been thoroughly coordinated and cross checked against all other applicable disciplines to prevent the omission of vital information, that all conflicts have been resolved, and that repetition has been avoided and, it is complete and in sufficient detail to allow ready determination of compliance with contract requirements by the Contracting Officer.

Name of CQC System Manager: _____

Signature of CQC System Manager: _____

Date: _____

## 1.4 ENGLISH LANGUAGE

All specifications, drawings, design analysis, design calculations, shop drawings, catalog data, materials lists, and equipment schedules submitted shall be in the English language. However, the local language of host country shall be added to project as-built drawings.

## 1.5 UNITS OF MEASUREMENT

Design documents shall be prepared in accordance with the guidance offered in SECTION 01415 METRIC MEASUREMENTS.

The metric units used are the International System of Units (SI) developed and maintained by the General Conference on Weights and Measures (CGPM); the name International System of Units and the international abbreviation SI were adopted by the 11th CGPM in 1960.

1.5.1 Drawings

1.5.1.1 All site layout data shall be dimensioned in meters or coordinates, as appropriate. All details and pipe sizes shall be dimensioned in millimeters.

EXAMPLE: Masonry openings shall be a U.S. module to suit a standard U.S. door. The dimensions of the opening shall be given in SI units. Metric dimensions for site plans shall be in meters and fraction thereof. Dimensions for all other drawings shall be in millimeters using hard metric designations (example: 12 meters = 12 000). Hard metric is defined as utilizing standard metric products and the use of measurements in increments of fifty (50) and one hundred (100) millimeters.

1.5.1.2 All site plans shall be georeferenced using the WGS 1984 coordinate system, specifically the following: WGS 1984 UTM one 42. This is required to allow AED to incorporate the plans into GIS for storage, map production, and possible geospatial analysis of the different work sites.

1.5.2 Design Calculations

Calculations shall be in SI units to meet the requirements of the design. Quantities on the contract drawings stated in SI units, shall also be stated in SI units in the design analysis to match the drawings.

1.5.3 Specifications

All equipment and products shall be specified according to U.S. and international standards and described by appropriate units as required herein.

## 1.6 WITHHOLDING OF PAYMENT FOR SUBMITTALS

1.6.1 Design Submittals - NOT USED

1.6.2 Construction Submittals

Payment for materials incorporated in the work will not be made if required approvals have not been obtained. In event under separate clause of the contract, the Contractor is allowed partial or total invoice payment for materials shipped from the Continental United States (CONUS), and/or stored at the site, the Contractor shall with his request for such payment, submit copies of approvals (ENG Form 4025) certifying that the materials that are being shipped and/or stored have been approved and are in full compliance with the contract technical specifications.

## PART 2 PRODUCTS

## 2.1 GENERAL

The following are contract deliverables which expound upon and finalize the design parameters/requirements outlined within the contract documents. They shall be prepared in such a fashion that the Prime Contractor is responsible to the Government and not as an internal document between the Prime Contractor and its Subcontractors, Vendors, Suppliers, etc.

## 2.2 DESIGN ANALYSIS - NOT USED

## 2.3 DESIGN CALCULATIONS - NOT USED

## 2.4 SPECIFICATIONS - NOT USED

## 2.5 DRAWINGS

Drawings, prepared in the English language with SI units of measure, are a part of each submittal. The working drawings shall be adequately labeled and cross-referenced for review. Complete, thoroughly checked and coordinated contract drawings shall be submitted. The contract drawings submitted for final review shall include the drawings previously submitted which have been revised and completed as necessary. The Contractor shall have incorporated any design review comments generated by previous design review(s), have completed all of his constructability and coordination checks, and have the drawings in a Ready-to-Build condition. The drawings shall be complete at this time and contain all the details necessary to ensure a clear understanding of the work throughout construction.

### 2.5.1 Drawing Size

If project is required to be in (SI) Metric units, all drawings shall be prepared in size "A1" sheets (594mm by 841mm). If project is required to be in English units, all drawings shall be modified Architectural D size (24 inches by 36 inches) sheets. Design submissions may be prepared in half size (11 inches by 17 inches) to save paper and for ease of review. All final contract drawing sets shall be prepared with full size sheets. Drawings shall be trimmed to size if necessary.

### 2.5.2 Computer Assisted Design and Drafting (CADD)

Computer Assisted Design and Drafting (CADD) is required for all work related to this contract. The CADD deliverables shall meet the requirements of the AEC CAD Standard Release 2.0. Emphasis is on drawings meeting sheet layout standards, level/layer naming standards and sheet naming conventions. CAD standards may be found at the following link: https://tsc.wes.army.mil/products/standards/aec/aecstdweb.asp. Transatlantic Programs Center Design Instructions Manual, Chapter 22 entitled COMPUTER ASSISTED DESIGN AND DRAFTING. The Contractor shall furnish the digital as-built drawing files in .DWG file format utilizing AutoDesk AutoCAD revision 2000 or later. Drawings prepared in any convention other than CADD, must have approval of the Contracting Officer.

### 2.5.3 Plotter Prepared Original Drawings

Plotter prepared original drawings shall be prepared on 20 pound bond paper, unless otherwise approved and shall be plotted on the matte side. Raster plotters must provide a minimum resolution of 400 dpi while vector plotters shall provide a minimum resolution of 0.0010 inch with an accuracy of +0.1% of the move and a repeatability error of not more than 0.005 inch. Drawings produced from dot matrix plotters are not acceptable. Plots accompanied by the digital design file may be prepared on vellum: translucent bond is not acceptable. Line density shall be equivalent to that produced by black India ink: half-tones and gray scale plots are not acceptable unless otherwise approved. Manual changes to plotted originals are not acceptable.

2.5.4 Half-Size Reduction

Preparation of all work shall accommodate half size reduction unless project is required to meet SI units or shall be instructed otherwise by the Contracting Officer.

2.5.5 Symbols and Abbreviations

Symbols and abbreviations shall be in accordance with AEC CAD Standard Release 2.0 or later /or conform to the symbols used with a CADD program such AutoDesk AutoCAD release 2000 or greater.

2.5.6 Design Discipline Designation Format

Referencing AEC CAD Standard Release 2.0, the drawing package shall be divided into the following proposed divisions:

| Discipline Designation | Discipline |
|---|---|
| Use the following for AEC CAD Standard Release 2.0: | |
| C | Civil |
| S | Structural |
| A | Architectural |
| F | Fire Protection |
| P | Plumbing |
| M | Mechanical |
| E | Electrical |

Each drawing for the particular facility shall be designated by the discipline designation and sheet number and shall be consecutive within each discipline. AEC CAD Standard, referenced herein, shall be adhered to, especially with regard to sheet naming, numbering and level/layer naming standards. Copies of level/layer naming standards are available at the following locations (in comma delimited format - .CSV) and may be imported into Microstation and/or AutoCAD release 2000 or later:

Public FTP site:
ftp://anonymous:anonymous@ftp.usace.army.mil/pub/aed/Standards/AEC_Nat_CAD_Std/level_libs/
SharePoint site:
https://aedsharepoint.tac.usace.army.mil/C16/Drawings/Document%20Library/AEC_CAD_level_templates.ZIP

2.5.7 Grouping Drawings

A building or individual facility design shall, except for site development drawings, be grouped in the design drawing package so that a single building may be withdrawn by deleting or removing a consecutive block of sheets.

2.5.8 Title and Revision Block

Title and revision block shall match FIGURES 1 through 5 furnished in the paragraph entitled ATTACHMENTS.

2.5.9 Drawing Scales

The scales indicated on the following list shall, in general, be used for all drawings. The Contractor may, at its option, make exceptions to scales indicated, if approved in writing by the Contracting Officer.

Site, Grading and Utility Plans - 1:500, if in SI units

Key Plans as large as practical

Cross Sections/elevations (as large scale as possible to adequately show required detail) - 1:100, if in SI units

Details - 1:10 minimum, if in SI units

2.5.10 Binding

All volumes of drawing prints shall be firmly bound and shall have covers of heavier bond than the drawing sheets. If posts are used to fasten sheets together, the drilled holes on the bond edges of the sheets shall be on 8-1/2-inch centers.

2.5.11 Typical Sheets

Typical sheets of standard details uniformly used on all buildings are authorized and encouraged. Sheets of standard details may be prepared so that they can be reused if the design package must be divided into separate construction packages. Each typical detail drawing sheet may be limited to a particular design discipline. Standard detail sheets shall be organized by discipline as are the other drawing sheets. Details peculiar to one facility shall not be shown in the standard details but with the group of drawings for the facility to which it pertains.

2.5.12 Index Sheet(s)

The first sheet of each volume in a project shall be a cover sheet. In general, the second sheet shall be the first index. Multiple index sheets may be required, depending on the project size. All index sheets shall be included with each volume of drawings and shall be an index of all the individual drawings in all volumes. The index shall list sequentially the site development drawings, each facility's drawings, and the standard details drawings (if any), and shall locate them by volume and file number. Each index sheet shall be signed and stamped by a principal of the Contractor.

2.5.13 Drawing File Number

The File Number is unique to each drawing and is a combination of a project location code, project number, facility designator and the CADD file name. Unassigned numbers or skipped sheets shall be labeled as "Not Used" on the index sheets. Cover sheets are not numbered.

2.5.14 Specifications Placed on the Drawings

Details of standard products or items which are adequately covered by specifications shall not be included on the drawings.

2.5.15 Legends

For each submittal, legends of symbols and lists of abbreviations shall be placed on the drawings. They shall include all of the symbols and abbreviations used in the drawing set, but shall exclude any symbols and abbreviations not used. Since many symbols are limited to certain design disciplines, there is a definite advantage to the use of separate legends on the initial sheet of each design discipline or in the Standard Details package for each discipline. If legends have not been shown by discipline, a legend shall be placed on the first drawing.

2.5.16 Location Grid

To facilitate the location of project elements and the coordination of the various disciplines' drawings, all plans shall indicate a column line or planning grid, and all floor plans (except structural plans) shall show room numbers.

2.5.17 Composite and Key Plans

If the plan of a large building or structure must be placed on two or more sheets in order to maintain proper scale, the total plan shall be placed on one sheet at a smaller scale. Appropriate key plans and match lines shall appear on segmented drawings. Key plans shall be used not only to relate large scale plans to total floor plans but also to relate individual buildings to complexes of buildings. Key plans shall be drawn in a convenient location and shall indicate the relative location of the represented plan area by crosshatching.

2.5.18 Revisions

Drawing revisions shall be prepared only on the original CADD files. A revision area is required on all sheets.

## PART 3 EXECUTION

### 3.1 GENERAL

3.1.1 Design Concept Coordination Meeting - NOT USED

3.1.2 Government Design Changes

Government design changes which do not increase construction costs shall be made at no charge to the Government. The Contracting Officer may request design submittals in addition to those listed when deemed necessary to adequately describe the work covered in the contract documents. Submittals shall be made in the respective number of copies and to the respective addresses set forth in the paragraph entitled SUBMITTAL PROCEDURE. Each submittal shall be complete and in sufficient detail to allow ready determination of compliance with contract requirements.

### 3.2 SUBMITTAL REGISTERS

3.2.1 Contractor-Furnished Design Documents Submittal Register (TAC Form 122-E)

3.2.1.1 General

The Contractor shall submit as part of his Project Schedule, information regarding the submittal and clearance for construction of Contractor furnished design documents. In addition, the Contractor shall provide a complete submittal register in the sample format (TAC Form 122-E - Contractor Furnished Design Documents Submittal Register) which is attached to this section. The Contractor shall, within fifteen (15) calendar days after approval of the Project Schedule, submit 3 copies of his finalized Contractor Furnished Design Document Submittal Register to the Contracting Officer for approval. The submittal register shall consist of a tabulation of all the Contractor furnished design documents with the indicated dates integrated into the Design Progress Schedule. The Contractor shall post all actual dates of submittal actions (including clearance for construction) as they occur. Revisions shall be made at minimum on a monthly basis to keep the submittal register in agreement with the scheduled dates shown in the network mathematical analysis.

3.2.1.2 Additions or Revisions

Any additions or changes required to be made to the TAC Form 122-E as a result of the Contracting Officer's review shall be incorporated into the TAC Form 122-E by the Contractor and (3) copies shall be affected within five (5) calendar days after receipt of the Contracting Officer's review comments.

3.2.1.3 Submission Requirements

A copy of the initial TAC Form 122-E and each monthly update prepared by the Contractor, shall be submitted to

AFGHANISTAN ENGINEER DISTRICT

(1) DHL, FEDEX, UPS or any other courier service:
U.S. Army Corps of Engineers
Afghanistan Engineer District
House # 1, St. #1 West
West Wazir Akbar High School
Behind Amani High School
Kabul, Afghanistan

(2) U.S. Postal Service:
AED
ATTN: QALAA House
APO AE 09356

3.2.2 Construction Submittal Register (ENG Form 4288)

Attached to this section is ENG Form 4288 which the Contractor is responsible for developing for this contract. All construction submittals shall be shown on this register. The submittal register shall be the controlling document and will be used to control all construction submittals throughout the life of the contract. The Contractor shall maintain and update the register on a monthly basis for the Contracting Officer's approval.

## 3.3 TRANSMITTAL FORM (ENG Form 4025)

The sample transmittal form (ENG Form 4025) attached to this section shall be used for submitting both design and construction submittals in accordance with the instructions on the reverse side of the form. These forms will be furnished to the Contractor. This form shall be properly completed by filling out all the heading blank spaces and identifying each item submitted. Special care will be exercised to ensure proper listing of the specification paragraph and/or sheet number of the contract drawings pertinent to the data submitted for each item.

## 3.4 PROGRESS SCHEDULE

The Contractor shall prepare and submit a design progress schedule to the Contracting Officer. The Critical Path Method (CPM) of network calculation shall be used to generate the Project Schedule. The progress schedule shall show, as a percentage of the total design price, the various items included in the contract and the order in which the Contractor proposes to carry on the work, with dates on which he will start the features of the work and the contemplated dates for completing same. Significant milestones such as review submittals shall be annotated. The Contractor shall assign sufficient technical, supervisory and administrative personnel to insure the prosecution of the work in accordance with the progress schedule. The Contractor shall correct the progress schedule at the end of each month and shall deliver Submittal section AED (3) copies to the Contracting Officer. The approved Project Schedule shall be used to measure the progress of the work, to aid in evaluating time extensions, and to provide the basis of all progress payments.

## 3.5 SCHEDULING

3.5.1 Design Submittals - NOT USED

3.5.2 Post Design Construction Submittals

Submittals covering component items forming a system or items that are interrelated shall be scheduled to be coordinated and submitted concurrently. Certifications to be submitted with the pertinent drawings shall be so scheduled. Adequate time (a minimum of fourteen (14) calendar days exclusive of mailing time) shall be allowed for review and approval. If the Contractor fails to submit post design construction submittals in a timely fashion, or repetitively submits submittals that are not in strict conformance with the contract documents, no part of the time lost due to actions shall be made the subject of claim for extension of time or for excess costs or damages by the Contractor.

## 3.6 SUBMITTAL PROCEDURE

3.6.1 Design Submittals - NOT USED

3.6.2 Editable CADD Format As-Builts

In accordance with Contract Clause 52.227-7022 GOVERNMENT RIGHTS (UNLIMITED), the Government has non-exclusive rights to use site specific modifications to the design on other projects. Therefore, the As-Builts furnished to the Government must be in an editable format. One (1) set of the Government approved As-Builts shall be submitted to the following address in an editable CADD format:

AFGHANISTAN ENGINEER DISTRICT

(1) DHL, FEDEX, UPS or any other courier service:
U.S. Army Corps of Engineers
Afghanistan Engineer District
House # 1, St. #1 West
West Wazir Akbar High School
Behind Amani High School
Kabul, Afghanistan

(2) U.S. Postal Service:

AED
ATTN: QALAA House
APO AE 09356

This requirement is in addition to all other submission requirements stated elsewhere in the contract.

NOTE: AED accepts AutoCad release 2000 or higher drawing file format as the standard due to the fact that the local region does not support Microstation. Under NO circumstances shall the Contractor translate (or convert) the files from AutoDesk AutoCAD to Bentley Microstation.

3.6.2 Post Design Construction Submittals

Three (3) copies of all post design construction submittals shall be transmitted to the overseas district office administering the construction portion of the contract at the following address:

AFGHANISTAN ENGINEER DISTRICT

(1) DHL, FEDEX, UPS or any other courier service:
U.S. Army Corps of Engineers
Afghanistan Engineer District
House # 1, St. #1 West
West Wazir Akbar High School
Behind Amani High School
Kabul, Afghanistan

(2) U.S. Postal Service:
AED
ATTN: QALAA House
APO AE 09356

Submittal area of the AED engineering section

One (1) additional copy of each Post Design Construction submittal shall be transmitted to the Government at the following stateside address by means of ENG Form 4025:

Submittals of Operations and Maintenance (O & M) Manuals in sets of (3) three copies shall be as follows:

AFGHANISTAN ENGINEER DISTRICT

(1) DHL, FEDEX, UPS or any other courier service:
U.S. Army Corps of Engineers
Afghanistan Engineer District
House # 1, St. #1 West
West Wazir Akbar High School
Behind Amani High School
Kabul, Afghanistan

(2) U.S. Postal Service:
AED
ATTN: QALAA House
APO AE 09356

3.6.3 Submittal Numbering System

Instructions on the numbering system to be used for construction submittals follows:

3.6.3.1 Submittals

Shop drawings and materials are listed on the Submittal Register (ENG Form 4288) as follows:

a. List is prepared according to contract specifications and drawings, picking up all items involved in the project.

b. This list is divided into sections as indicated in the specifications for example:

| | | |
|---|---|---|
| Sec | 01015 | "Technical Requirements" |
| Sec. | 02831 | "Chain-Link Fence" |
| Sec. | 02710 | "Subdrainage System" |
| Sec | 03300 | "Concrete For Building Construction" |
| Sec. | 04200 | "Masonry" |

3.6.3.2 Numbering procedures for transmittal on ENG FORM 4025

a. Each section, may include a list of items. All these items will then be listed with a progressive number within the sections they belong to, for example:

Sec. 01015 will have 01015.00 (Basic number)
Item x " " 01015.01
Item y " " 01015.02
Item z " " 01015.03

Sec. 02710 will have 02710.00 (Basic number)
Item x " " 02710.01
Item y " " 02710.02
Item z " " 02710.03

Sec. 02600 will have 02600.00 (Basic number)
Item x " " 02600.01
Item y " " 02600.02

Sec. 03300 will have 03300.00 (Basic number)
Item x " " 03300.01
Item y " " 03300.02
etc.

b. It is evident a transmittal will never show a Section number i.e., 02831.00, 03300.00, etc., since these are only the basic numbers of the system. Numbers on transmittals will be the item numbers, i.e., 01015.01, 02710.01, 02710.02, 02710.03, 03300.01, 03300.02, etc. All items, as listed on the Submittal Register, will be submitted via a separate transmittal form ENG FORM 4025 thus avoiding getting together more than one item (as listed) and more than one number. There are items, on the other hand, which may be submitted all together on the same transmittal form. This must be established before submission is made.

c. Sec. 10800 "Toilet Accessories" - this section will have basic number 10800.00 - all items relative to it will be listed one by one on separate lines. ONLY one transmittal number will then be given for all of these "10800.01" which will include i.e., robe hook, toilet paper holder, mirror, soap holder, cabinet for paper towels, etc. Each one of these items will be listed on the same Transmittal Number 10800.01 as item 1, item 2, item 3, etc.

3.6.3.3 Resubmittals

Should the Contractor be required to resubmit any transmittal, it will be accomplished by utilizing the same transmittal number followed by the number "-1" for the first resubmittal, "-2" for the second resubmittal, "-3" for the third resubmittal, etc. For example, a first resubmittal would be "SUBMITTAL PROCEDURES FOR DESIGN BUILD PROJECT" 01335.01-1, a second resubmittal 01335.01-2, etc. The purpose of this system is to avoid deviations from Submittal Register and, to avoid confusion arising from the use of more than one number on transmittal when more than one item is submitted on the same form. This system will also facilitate the use, wherever required, on machine printouts.

3.6.4 Variations

If design documents or construction submittals show variations from the contract parameters and/or requirements, the Contractor shall justify such variations in writing, at the time of submission. Additionally, the Contractor shall also annotate block "h" entitled "variation" of ENG FORM 4025. After submittals have been reviewed and cleared for construction by the Contracting Officer, no resubmittal for

the purpose of substituting materials, equipment, systems, and patented processes will be considered unless accompanied by the following:

a. Reason or purpose for proposed variation, substitution, or revision.

b. How does quality of variation compare with quality of the specified item? This shall be in the form of a technical evaluation tabulating differences between the item(s) originally specified and what is proposed.

c. Provide a cost comparison. This shall include an acquisition and life cycle cost comparison.

d. For proprietary materials, products, systems, and patented processes a certification signed by an official authorized to certify in behalf of the manufacturing company that the proposed substitution meets or exceeds what was originally specified.

e. For all other actions, a certification signed by a licensed professional engineer or architect certifying that the proposed variation or revision meets or exceeds what was originally specified.

f. Advantage to the Government, if variation is approved, i.e. Operation and Maintenance considerations, better product, etc.

g. Ramifications and impact, if not approved.

If the Government review detects any items not in compliance with contract requirements or items requiring further clarification, the Contractor will be so advised. Lack of notification by the Contracting Officer of any non-complying item does not relieve the Contractor of any contractual obligation.

3.6.5 Non-Compliance

The Contracting Officer will notify the Contractor of any detected noncompliance with the requirements of this specification. The Contractor shall take immediate corrective action after receipt of such notice. Such notice, when delivered to the Contractor at the worksite, shall be deemed sufficient for the purpose of notification. If the Contractor fails or refuses to comply promptly, the Contracting Officer may issue an order stopping all or part of the work until satisfactory corrective action has been taken. No part of the time lost due to such stop orders shall be made the subject of claim for extension of time or for excess costs or damages by the Contractor.

## 3.7 REVIEW OF CONTRACTOR PREPARED DESIGN DOCUMENTS

3.7.1 General

Limited design work associated with adaptations to the design provided in this contract may be required. Work under this contract will be subject to continuous review by representatives of the Contracting Officer. Additionally, joint design review conferences with representation by all organizations having a direct interest in the items under review may be held. The Contractor shall furnish copies of all drawings and related documents to be reviewed at the review conference on or before the date indicated by the Government. Additional conferences pertaining to specific problems may be requested by the Contractor or may be directed by the Contracting Officer as necessary to progress the work. The Contractor shall prepare minutes of all conferences and shall furnish two copies to the Contracting Officer within seven (7) days after the conference.

**Note: All design submittal reviews shall be reviewed and comments entered in DrChecks located on the web at: https://www.projnet.org/projnet/binKornHome/index.cfm**

3.7.2 Independent Design Review

The Contractor shall have someone other than the Designer or Design Team perform an independent review of all specifications, drawings, design analysis, calculations, and other required data prior to submission to the Government. Upon completion of this review, the Contractor shall certify that each design submittal is complete, accurate, is in strict conformance with all contract requirements, that repetition has been avoided, that all conflicts have been resolved, and that the documents have thoroughly coordinated and cross checked against all the applicable disciplines to prevent the omission of vital information.

3.7.3 Contractor's Quality Control Organization Review

This review shall be for the purposes of eliminating errors, interferences, and inconsistencies, and of incorporating design criteria, review comments, specifications, and any additional information required. Design submittals submitted to the Contracting officer without evidence of the Contractor's certified approval will be returned for resubmission. No part of the time lost due to such resubmissions shall be made the subject of claim for extension of time or for excess costs or damages by the Contractor.

Action Code on Eng Form 4025 the “G – Other (specify)" Code must be used. ENG Forms 4025 and 4026 will be annotated as follows:

G – Cleared for Construction

G – Cleared for Construction, except as noted in attached comments

G – Cleared for Construction, except as noted in attached comments, resubmission required

G -- NOT Cleared for Construction, see attached comments, resubmission required

FX – Receipt acknowledged, does not comply as noted with contract requirements.

NOTE: Cleared for construction does not relieve the Contractor from the responsibility for any errors or omissions in the design, nor from responsibility for complying with the requirements of this contract.

3.7.4 Government Review

Within 14 days after Notice to Proceed, the Contractor shall submit, for approval, a complete schedule with all submittals and review times indicated in calendar dates. The Contractor shall update this schedule bi-weekly. After receipt, the Government will be allowed fourteen (14) days to review and comment on any design submittals that are required, except as noted below. For each design review submittal, comments from the various design sections and from other concerned agencies involved in the review process will be made in the on-line review management system DrChecks$_{SM}$ (https://www.projnet.org/projnet/binKornHome/index.cfm ). Contractor shall coordinate with the Contracting Officer and/or Representative(s) to register for DrChecks$_{SM}$ use. The review will be for conformance with the technical requirements of the solicitation and the Successful Offeror's (Contractor's) RFP proposal.

If a design submittal is deficient, it will be returned for correction and resubmission. The review time will begin when the corrected submittal is received.

The contractor shall not begin construction work until the Government has reviewed any changes proposed by the Contractor to the design provided with this contract contractor's design and has cleared it for construction. Clearance for construction does not mean Government approval. Government review shall not be construed as a complete check but will evaluate the general design approach and adherence to contract parameters. The Government Review is often limited in time and scope. Therefore, the Contractor shall not consider any review performed by the Government as an excuse for incomplete work. Upon completion of the review, all comments will be forwarded to the Contractor. The Contracting

Officer will indicate whether the design submittal has or has not been cleared for construction using the following action codes:

A – Cleared for Construction

B – Cleared for Construction, except as noted in attached comments

C – Cleared for Construction, except as noted in attached comments, resubmission required

E - NOT Cleared for Construction, see attached comments, resubmission required

FX – Receipt acknowledged, does not comply as noted with contract requirements.

These codes shall NOT be used by the Contractor. Contractor's Quality Control Organization will annotate Block "g" entitled "FOR CONTRACTOR USE CODE" of Eng Form 4025-R using the action codes listed on the reverse side of the form.

Design submittals Cleared for Construction by the Contracting Officer shall not relieve the Contractor from responsibility for any design errors or omissions and any liability associated with such errors, nor from responsibility for complying with the requirements of this contract.

3.7.4.1 Incorporation of Government Review Comments

If the Contractor disagrees technically with any comment or comments and does not intend to comply with the comment, he must clearly outline, with ample justification, the reasons for noncompliance within five (5) days after close of review period in order that the comment can be resolved. The Contractor shall furnish disposition of all comments in DrChecks$_{SM}$, with the next scheduled submittal. The disposition shall identify action taken with citation of location within the relevant design document. Generalized statements of intention such as "will comply" or "will revise the specification" are not acceptable. The Contractor is cautioned that if he believes the action required by any comment exceeds the requirements of this contract, that he should flag the comment in DrChecks$_{SM}$ as a scope change, and notify the COR in writing immediately. If a design submittal is over one (1) day late in accordance with the latest design schedule, the Government review period may be extended 7 days. Submittals date revisions must be made in writing at least five (5) days prior to the submittal. During the design review process, comments will be made on the design submittals that will change the drawings and specifications. The Government will make no additional payments to the Contractor for the incorporation of comments. Review comments are considered part of the construction process.

The Contractor will be furnished comments from the various design sections of the Corps of Engineers, Afghanistan Engineer District (AED) as well as from other concerned agencies involved in the review process. The review will be for conformance with the technical requirements and parameters of the contract documents. The Contractor shall either incorporate each comment or, if the Contractor disagrees technically and does not intend to comply with the comment(s), the contractor shall clearly outline, with ample justification, its reasons for its noncompliance within five (5) days after receipt of the comment(s). Additionally, the Contractor is cautioned in that if it believes the action required by any comment exceeds the requirements of this contract, that he should take no action and notify the Contracting Officer in writing immediately. The disposition of all comments shall be furnished in writing with the next scheduled submittal. The review comments and the submittal material for each design review will become the basis for any ensuing design work. Copies of the design review comments with the action taken on each comment noted shall be bound in all succeeding volumes of the design analysis.

3.7.4.2 Conferences

As necessary, conferences will be conducted between the Contractor and the Government to resolve review comments.

3.7.4.3 Design Deficiencies - NOT USED

3.7.5 Design Discrepancies

The Contractor shall be responsible for the correction of incomplete design data, omissions, and design discrepancies which become apparent during construction. The Contractor shall provide the Contracting Officer with a proposed recommendation for correcting a design error, within three (3) calendar days after notification by the Contracting Officer. The Contracting Officer will notify the Contractor of any detected noncompliance with the foregoing requirements. The Contractor shall take immediate corrective action after receipt of such notice. Such notice, when delivered to the Contractor at the worksite, shall be deemed sufficient for the purpose of notification. If the Contractor fails or refuses to comply promptly, the Contracting Officer may issue an order stopping all or part of the work until satisfactory corrective action has been taken. No part of the time lost due to such stop orders shall be made the subject of claim for extension of time or for excess costs or damages by the Contractor. Should extensions of design, fabrication plans and/or specific manufacturer's details be required as a result of a Government issued Change Order, the Government will make an equitable adjustment in accordance with Contract Clause 52.243-4 entitled CHANGES.

**3.8 PHASED OR “FAST-TRACK” DESIGN**

3.8.1 General

If approved by the Government, design and construction sequencing may be effected on an incremental basis as each approved phase or portion (e.g., demolition, geotechnical, site work, exterior utilities, foundations, substructure, superstructure, exterior closure, roofing, interior construction, mechanical, electrical, etc.) of the design is completed.

3.8.1.1 Design Phases

Complete or partial design phasing may or may not have been specified by the Government elsewhere in this contract. For construction sequencing or phasing that the Government has not specifically mandated, the Contractor may submit a proposed phasing plan. Design phasing proposed by the Contractor shall be submitted to the Government for approval in accordance with TAC Form 122-E CONTRACTOR FURNISHED DESIGN DOCUMENTS.

3.8.2 Sequence of Design-Construction (Fast-Track)

After receipt of the Contract Notice to Proceed (NTP) the Contractor shall initiate design, comply with all design submission requirements and obtain Government review of each submission. The contractor may begin construction on portions of the work for which the Government has reviewed the final design submission and has determined satisfactory for purposes of beginning construction. The Contracting Officer will notify the Contractor when the design is cleared for construction. The Government will not grant any time extension for any design resubmittal required when, in the opinion of the Government, the initial submission failed to meet the minimum quality requirements as set forth in the contract.

3.8.3 Notice-to-Proceed for Limited Construction

If the Government allows the Contractor to proceed with limited construction based on pending minor revisions to the reviewed Final Design submission, no payment will be made for any in-place construction

related to the pending revisions until they are completed, resubmitted and are satisfactory to the Government.

3.8.4 In-Place Construction Payment

No payment will be made for any in-place construction until all required submittals have been made, reviewed and are satisfactory to the Government.

3.8.5 Commencement of Construction

Construction of work may begin after receipt of the clearance for construction (Notice to Proceed) for each design phase. Any work performed by the Contractor prior to receipt of the clearance for construction, shall be at the Contractor's own risk and expense. Work cleared for construction that does not conform to the design parameters and/or requirements of this contract shall be corrected by the Contractor at no additional cost or time to the Government.

## 3.9 DESIGN STAGES - NOT USED

## 3.10 GENERAL DESIGN INSTRUCTIONS

3.10.1 Responsibility of the Contractor

3.10.1.1 Professional Quality, Technical Accuracy, and Coordination

The Contractor shall be responsible for the professional quality, technical accuracy, and the coordination of all design specifications, drawings, and other services furnished under this contract. Work must be organized in a manner that will assure thorough coordination between various details on drawings, between the various sections of the specifications, and between the drawings and specifications. The Contractor shall thoroughly cross-check and coordinate all work until he is professionally satisfied that no conflicts exist, vital information has not been omitted, and that indefinite language open to interpretation has been resolved.

3.10.1.2 Deviating From The “Cleared-For-Construction” Design

(a.) The Contractor must obtain the approval of the Designer of Record (DOR) and the Government’s concurrence for any Contractor proposed revision to the professionally stamped and sealed design reviewed and Cleared for Construction by the Government, before proceeding with the revision.

(b.) The Government reserves the right to non-concur with any revision to the design, which may impact furniture, furnishings, equipment selections or operations decisions that were made, based on the reviewed and cleared for construction design.

(c.) Any revision to the design, which deviates from the contract requirements (i.e., the RFP and the accepted proposal), will require a modification, pursuant to the Changes clause, in addition to Government concurrence. The Government reserves the right to disapprove such a revision.

(d.) Unless the Government initiates a change to the contract requirements, or the Government determines that the Government furnished design criteria are incorrect and must be revised, any Contractor initiated proposed change to the contract requirements, which results in additional cost, shall strictly be at the Contractor's expense.

(e.) The Contractor shall track all approved revisions to the reviewed and cleared for construction design and shall incorporate them into the as-built design documentation. The Designer of Record shall document its professional concurrence on the As-Builts for any revisions by affixing its stamp and seal on the drawings and specifications.

3.10.1.3 Government Oversight

The extent and character of the work to be done by the Contractor shall be subject to the general oversight, supervision, direction, control, and review by the Contracting Officer.

3.10.1.4 Unlimited Drawing Rights

The Government shall have unlimited rights in all drawings, designs, specifications, notes and all other works developed in the performance of this contract, including the right to use same on any other Government design or construction without additional compensation to the Contractor. The Contractor hereby grants to the Government a paid-up license throughout the world to all such works to which he may assert or establish any claim under design patent or copyright laws.

3.10.1.5 Conflicts

Any conflicts, ambiguities, questions or problems encountered by the Contractor in following the criteria shall be immediately submitted in writing to the Contracting Officer with the Contractor's recommendations. Prior to submission to the Government the Contractor shall take appropriate measures to obtain clarification of design criteria requirements, to acquire all pertinent design information, and to incorporate such information in the work being performed.

3.10.1.6 Design Specialists

Whenever a design specialist is required, the Contractor shall submit for the approval by Contracting Officer, the name of the designated specialist along with the individual's educational background, experience, and licenses or registrations held, before design work commences. The design specialists shall be registered architects, registered professional engineers, or recognized consultants with a background of at least five (5) years design experience in the appropriate specialty. Services of design specialists may be required for the following specialties:

| | |
|---|---|
| Fire Protection | Landscape Design |
| Medical Design | Stage/Theater Design |
| Acoustical Design | Interior Design |
| Educational Design | Security |
| Telecommunications | Audio Visual, PA, TV, etc. |
| Geotechnical Design | Hardened Structures |
| Asbestos Abatement | X-Ray Shielding |
| EMF Shielding | Site grading |

3.10.2 Conduct of Work

In the performance of contract the Contractor shall:

3.10.2.1 Performance

Perform the work diligently and aggressively, and promptly advise the Contracting Officer of all significant developments.

3.10.2.2 Telephone Conversations

Prepare a summary, and promptly furnish a copy thereof to the Contracting Officer, of all telephone conversations relating to the design work under this contract.

3.10.2.3 Cooperation with Others

Cooperate fully with other firms, consultants and contractors performing work under the program to which this contract pertains, upon being advised by the Contracting Officer that such firms or individuals have a legitimate interest in the program, have need-to-know status, and proper security clearance where required.

3.10.2.4 Technical Criteria

All designs, drawings, and specifications shall be prepared in accordance with the contract documents and with the applicable publications referenced therein. As soon as possible, the Contractor shall obtain copies of all publications applicable to this contract. Availability of publications (where to purchase) is contained in Specification Section 01420 entitled: SOURCES FOR REFERENCE PUBLICATIONS. Any deviations from the technical criteria contained in the contract documents or in the applicable publications, including the use of criteria obtained from the user or other sources, must receive prior approval of the Contracting Officer. Where the technical criteria contained or referred to herein are not met, the Contractor will be required to conform his design to the same at his own time and expense.

3.10.3 Design Priorities

The design of this project shall consider the remote location and harsh environment of this project and the impact this will have on sources of technical supply, the cost of construction, the low level of maintenance, and the difficulty of obtaining replacement parts. Unless stated otherwise in this contract, the following design priorities shall be followed:

3.10.3.1 CONSTRUCTION LIFE-SPAN LEVELS

Permanent Construction. Buildings and facilities shall be designed and constructed to serve a life expectancy of more than 25 years, to be energy efficient, and to have finishes, materials, and systems that are low maintenance and low life-cycle cost.

Semi permanent Construction. Buildings and facilities shall be designed and constructed to serve a life expectancy of more than 5 years but less than 25 years, to be energy efficient, and to have finishes, materials, and systems that require a moderate degree of maintenance using the life-cycle cost approach.

Temporary Construction. Buildings and facilities shall be designed and constructed to serve a life expectancy of 2 years or less using low-cost construction, with finishes, materials, and systems that are selected with maintenance factors being a secondary consideration.

Mobilization, Emergency and Contingency Operations Construction. Buildings and facilities shall be designed and constructed to serve a specific mobilization or emergency requirement. Buildings will be austere to minimize construction time and maximize conservation of critical materials. Maintenance factors and longevity will be secondary considerations.

3.10.3.2 Operability

Systems including but not necessarily limited to mechanical, electrical, communications, etc., must be simple to operate and easy to maintain.

3.10.3.3 Standardization

Use of standardized materials, products, equipment, and systems is necessary to minimize the requirements for replacement parts, storage facilities, and service requirements.

3.10.3.4 Overseas Work

Use of construction materials or techniques shall be utilized which are suitable for overseas work in harsh climates and environments.

3.10.4 NOT USED

3.10.5 NOT USED

3.10.6 Cathodic Protection and Earth Resistance

Unless otherwise stated in the contract, the Contractor will be responsible for determining whether cathodic protection on buried structures and underground utility systems are needed for special electrical grounding and counterpoise systems, and for gathering the field data necessary for design.

3.10.7 Water Supply and Quality Data

Unless otherwise stated in the contract, the Contractor will be responsible for obtaining all water supply and water quality data. This data will include information on the locations and depths of all viable water supply sources at the site(s) involved and a water quantity and water quality analysis for each source.

3.10.8 Occupational Safety and Health Act

The facilities, systems, and equipment designed under this contract shall comply with the Occupational Safety and Health Act (OSHA), Code of Federal Regulations, Title 29, Chapter XVII, Parts 1910 and 1926. Any problems in incorporating these standards due to conflicts with other technical criteria shall be submitted to the Contracting Officer for resolution.

3.10.9 Asbestos Containing Materials

Asbestos containing material (ACM) will not be used in the design of new structures or systems. In the event no other material is available which will perform the required function or where the use of other material would be cost prohibitive, a waiver for the use of asbestos containing materials must be obtained from the contracting officer.

3.10.9.1 Existing Construction

Asbestos containing materials (ACM) presently included in existing construction to be rehabilitated or otherwise modified as a result of this project, shall be removed and a non-asbestos containing material substituted in lieu thereof.

3.10.9.2 Suspected Asbestos Containing Materials

All such structures and systems shall be inspected to determine the presence or probable presence of ACM. When ACM is suspected, a documented survey will be performed. The survey will be developed into an abatement design and will be made a part of the design documents. In the event no other material is available which will perform the required function or the use of a substitute material would be cost prohibitive due to initial cost and tear-out of existing construction, a waiver for the retention of the asbestos containing material must be obtained from the Contracting Officer.

## 3.11 VALUE METHODOLOGY/VALUE ENGINEERING

The Contractor during the course of his design shall be alert for and shall identify those high-cost low-value items or areas which he considers may be accomplished in different ways that will increase the value of the project at the same or less cost. Potential value engineering study items shall be reported to the Value Engineer through the Contracting Officer.

3.11.1 Performance Oriented Value Engineering Change Proposal (VECP)

In reference to Contract Clause 52.248-3, "Value Engineering - Construction", the Government may refuse to entertain a "Value Engineering Change Proposal" (VECP) for those "performance oriented" aspects of the Contract Documents which were addressed in the Contractor's accepted contract proposal and which were evaluated in competition with other Proposers for award of this contract. For purposes of this clause, the term "performance oriented" refers to those aspects of the design criteria or other contract requirements which allow the Proposer or the Contractor certain latitude, choice of and flexibility to propose in its accepted contract offer a choice of design, technical approach, design solution, construction approach or other approach to fulfill the contract requirements. Such requirements generally tend to be expressed in terms of functions to be performed, performance required or essential physical characteristics, without dictating a specific process or specific design solution for achieving the desired result.

3.11.2 Prescriptive Oriented Value Engineering Change Proposal (VECP)

The Government may consider a VECP for those "prescriptive" aspects of the Solicitation documents, not addressed in the Contractor's accepted contract proposal or addressed but evaluated only for minimum conformance with the Solicitation requirements. For purposes of this clause, the term "prescriptive" refers to those aspects of the design criteria or other Solicitation requirements wherein the Government expressed the design solution or other requirements in terms of specific materials, approaches, systems and/or processes to be used. Prescriptive aspects typically allow the Proposers little or no freedom in the choice of design approach, materials, fabrication techniques, methods of installation or other approach to fulfill the contract requirements.

## 3.12 SUBMITTAL OF CONTRACTOR FURNISHED DESIGN DOCUMENTS

The requirements of this paragraph pertain to the submittal of design documents, specifications, design calculations, surveys, testing reports and other documents prepared by the Contractor to meet the design requirements of this project.

3.12.1 Geo-technical

3.12.1.1 Design Analysis

The Contractor shall submit in the design analysis catalog cuts, manufacturer's data for the following:

3.12.1.2 Specifications

Specifications for all civil utilities shall include:

3.12.1.3 Design Drawings

1 ea. Full Size, 2 ea. Half-Size Design drawings shall be submitted for the following:

Afghanistan Engineer District (AED)

3.12.1.4 Manufacturer's recommendations, instructions, and certifications

Shall be submitted for the following:

Afghanistan Engineer District (AED)

3.12.1.5 Samples

Samples shall be submitted for the following:

Afghanistan Engineer District (AED)

3.12.1.6 Schedules

Schedules shall be submitted for the following:

Afghanistan Engineer District (AED)

3.12.1.7 Reports

Reports shall be submitted for the following:

Afghanistan Engineer District (AED)

3.12.1.8 Records

Records shall be submitted for the following:

Afghanistan Engineer District (AED)

Engineering Studies. Occasionally, in addition to the items previously mentioned, engineering studies that relate to specific problems or surveys may be required. The necessary instructions regarding the preparation of such reports must be added by the Specification Writer as appropriate.

3.12.2 Civil, Site Planning and Layout

3.12.3 Water, Wastewater, and Solid Waste Systems

3.12.4 Architectural/Interior Design

3.12.5 Structural

3.12.6 Force Protection Design Procedures for the Protection of United States Forces

3.12.7 Fire Protection and Life Safety

3.12.8 Heating, Ventilating, and Air Conditioning

3.12.9 Plumbing

3.12.10 Special Mechanical Systems and Equipment

3.12.11 Electrical

3.12.12 Power Generation

3.12.13 Power Transmission and Distribution

3.12.14 Communications

3.12.15 Corrosion Prevention and Control

3.12.16 Renovation Design

3.12.17 Accident Prevention and Safety

**3.13 SUBMITTAL OF CONTRACTOR FURNISHED DESIGN DRAWINGS**

3.13.1 Geo-technical

3.13.2 Civil, Site Planning and Layout

3.13.3 Water, Wastewater, and Solid Waste Systems

3.13.4 Architectural/Interior Design

3.13.5 Structural

3.13.6 Force Protection Design Procedures for the Protection of United States Forces

3.13.7 Fire Protection and Life Safety

3.13.8 Heating, Ventilating, and Air Conditioning

3.13.9 Plumbing

3.13.10 Special Mechanical Systems and Equipment

3.13.11 Electrical

3.13.12 Power Generation

3.13.13 Power Transmission and Distribution

3.13.14 Communications

3.13.15 Corrosion Prevention and Control

3.13.16 Renovation Design

3.13.17 Accident Prevention and Safety

**3.14 GOVERNMENT APPROVED CONSTRUCTION SUBMITTALS (Required During Construction)**

3.14.1 General

Since this contract requires that the drawings and specifications specify specific proprietary materials, equipment, systems, and patented processes by trade name, make, or catalog number, it is anticipated that construction shop drawings will primarily be limited to testing, construction plans (e.g., Contractor Quality Control, Accident Prevention, Resident Management System, Area Use etc), schedules (Project Schedule/Network Analysis), certificates of compliance, reports, records/statements and variations.

3.14.1.1 Variations

After design submittals have been reviewed and cleared for construction by the Contracting Officer, no submittal for the purpose of substituting materials, equipment, systems, and patented processes will be considered by the Government unless submitted in accordance with the paragraph entitled VARIATIONS.

3.14.1.2 Additional Shop Drawings and Submittals

In accordance with the paragraph entitled DESIGN DISCREPANCIES, the Government may request the Contractor to provide additional shop drawing and submittal type data subsequent to completion of the design.

3.14.2 Incomplete Design

The Contractor shall not use construction submittals as a means to supplant and/or supplement an incomplete design effort.

3.14.3 Government Approval of Construction Submittals

The approval of construction submittals by the Contracting Officer shall not be construed as a complete check, but will indicate only that the general method of design construction, materials, detailing and other information are satisfactory. Approval will not relieve the Contractor of the responsibility for any error which may exist, as it is the sole responsibility of the Contractor to certify that each submittal has been reviewed in detail and is in strict conformance with all the contract documents and design criteria referenced therein.

Virtually all design related construction submittals can and must be incorporated directly into the design specifications and drawings prepared by the Contractor. Since the Contractor has sole responsibility for the design, procurement, and construction, impediments do not exist which would impair his ability to specifically identify what is being furnished to the Government prior to the start of construction. Generic/non-proprietary specifications are indicative of an incomplete design effort and as such must be rejected as unacceptable

3.14.4 Submittals

Submittals (other than shop drawings) shall be limited to items such as Plans (e.g., Quality Control Plan, Accident Prevention Plan, Area Use Plan etc.),Certificates of Compliance, Installation Instructions, Manufacturer's Catalog Data, Descriptive Literature/Illustrations, Factory and Field Test Reports, Performance and Operational Test Data Reports, Records, Operation and Maintenance Manuals, and required variations.

3.14.5 Government Review

Upon completion of review of construction submittals requiring Government approval, the submittals will be identified as having received approval by being so stamped and dated. two (2) copies of the submittal will be retained by the Contracting Officer and one (1) copy of the submittal will be returned to the Contractor.

## 3.15 FOR INFORMATION ONLY SUBMITTALS

These submittals shall be checked, stamped, signed and dated by the Contractor's Quality Control Engineer, certifying that such submittal complies with the contract requirements. All Contractor submittals shall be subject to review by the Government at any time during the course of the contract. Any Contractor submittal found to contain errors or omissions shall be resubmitted as one requiring "approval". No adjustment for time or money will be allowed for corrections required as a result of noncompliance with plans or specifications. Normally submittals for information only will not be returned. Approval of the Contracting Officer is not required on information only submittals. These submittals will

be used for information purposes. The Government reserves the right to require the Contractor to resubmit any item found not to comply with the contract. This does not relieve the Contractor from the obligation to furnish material conforming to the plans and specifications and will not prevent the Contracting Officer from requiring removal and replacement if nonconforming material is incorporated in the work.

**3.16 ATTACHMENTS**

The following attachments form an integral part of this specification:

ENG FORM 4025 - Transmittal of Shop Drawings , Equipment Data, Material Samples, or Manufacturer's Certificate of Compliance (2 pages)

TAC FORM 122-E - Contractor Furnished Design Documents Submittal Register

ENG FORM 4288 - Submittal Register

Select one of the following:
AED projects:

Figure 1 - sheet/number description; AED title block per AEC CADD standards

Figure 2 - A-E logo/designed by/submitted my; AED title block per AEC CADD standards

Figure 3 - revision block; AED title block per AEC CADD standards

Figure 4 - Finished Format Size per AEC CADD standards

-- End of Section -

| TRANSMITTAL OF SHOP DRAWINGS, EQUIPMENT DATA, MATERIAL SAMPLES, OR MANUFACTURER'S CERTIFICATES OF COMPLIANCE *(Read instructions on the reverse side prior to initiating this form)* | DATE | TRANSMITTAL NO. W917PM-07-R-0021 Page 255 of 380 |
|---|---|---|

## SECTION I - REQUEST FOR APPROVAL OF THE FOLLOWING ITEMS *(This section will be initiated by the contractor)*

| TO: | FROM: | CONTRACT NO. | CHECK ONE: ☐ THIS IS A NEW TRANSMITTAL ☐ THIS IS A RESUBMITTAL OF TRANSMITTAL _____ |
|---|---|---|---|
| SPECIFICATION SEC. NO. *(Cover only one section with each transmittal)* | PROJECT TITLE AND LOCATION | | CHECK ONE: THIS TRANSMITTAL IS FOR ☐ FIO ☐ GOV'T. APPROVAL |

| ITEM NO. *a.* | DESCRIPTION OF ITEM SUBMITTED *(Type size, model number/etc.)* *b.* | MFG OR CONTR. CAT., CURVE DRAWING OR BROCHURE NO. *(See instruction no. 8)* *c.* | NO. OF COPIES *d.* | CONTRACT REFERENCE DOCUMENT | | FOR CONTRACTOR USE CODE *g.* | VARIATION *(See instruction No. 6)* *h.* | FOR CE USE CODE *i.* |
|---|---|---|---|---|---|---|---|---|
| | | | | SPEC. PARA. NO. *e.* | DRAWING SHEET NO. *f.* | | | |
| | | | | | | | | |
| | | | | | | | | |
| | | | | | | | | |
| | | | | | | | | |
| | | | | | | | | |
| | | | | | | | | |
| | | | | | | | | |
| | | | | | | | | |
| | | | | | | | | |
| | | | | | | | | |

| REMARKS | **I certify that the above submitted items have been reviewed in detail and are correct and in strict conformance with the contract drawings and specifications except as other wise stated.** _____ NAME AND SIGNATURE OF CONTRACTOR |
|---|---|

## SECTION II - APPROVAL ACTION

| ENCLOSURES RETURNED *(List by Item No.)* | NAME, TITLE AND SIGNATURE OF APPROVING AUTHORITY | DATE |
|---|---|---|
| | | |

# INSTRUCTIONS

1. Section I will be initiated by the Contractor in the required number of copies.

2. Each transmittal shall be numbered consecutively in the space provided for "Transmittal No.". This number, in addition to the contract number, will form a serial number for identifying each submittal. For new submittals or resubmittals mark the appropriate box; on resubmittals, insert transmittal number of last submission as well as the new submittal number.

3. The "Item No." will be the same "Item No." as indicated on ENG FORM 4288-R for each entry on this form.

4. Submittals requiring expeditious handling will be submitted on a separate form.

5. Separate transmittal form will be used for submittals under separate sections of the specifications.

6. A check shall be placed in the "Variation" column when a submittal is not in accordance with the plans and specifications--also, a written statement to that effect shall be included in the space provided for "Remarks".

7. Form is self-transmittal, letter of transmittal is not required.

8. When a sample of material or Manufacturer's Certificate of Compliance is transmitted, indicate "Sample" or "Certificate" in column c, Section I.

9. U.S. Army Corps of Engineers approving authority will assign action codes as indicated below in space provided in Section I, column i to each item submitted. In addition they will ensure enclosures are indicated and attached to the form prior to return to the contractor. The Contractor will assign action codes as indicated below in Section I, column g, to each item submitted.

THE FOLLOWING ACTION CODES ARE GIVEN TO ITEMS SUBMITTED

| | | | | | |
|---|---|---|---|---|---|
| A | -- | Approved as submitted. | E | -- | Disapproved (See attached). |
| B | -- | Approved, except as noted on drawings. | F | -- | Receipt acknowledged. |
| C | -- | Approved, except as noted on drawings. Refer to attached sheet resubmission required. | FX | -- | Receipt acknowledged, does not comply as noted with contract requirements. |
| D | -- | Will be returned by separate correspondence. | G | -- | Other *(Specify)* |

10. Approval of items does not relieve the contractor from complying with all the requirements of the contract plans and specifications.

*(Reverse of ENG Form 4025-R)*

| **Contractor - Furnished Design Documents Submittal Register** | Contract Title & Location: | |
|---|---|---|
| | Contractor: | Contract Number: |

| Submittal Identification Nº. | NAS Activity Code | Description of Document (s) | Contractor Submittal Date | Government Action | |
|---|---|---|---|---|---|
| | | | | Receipt Date | Construction Clearance Date |
| | | | | | |

**TAC Form 122-E**
**September 2003(R)**

# SUBMITTAL REGISTER

(ER 415 1-10)

CONTRACT NO.

TITLE AND LOCATION

CONTRACTOR

SPECIFICATION SECTION

| ACTIVITY NO a. | TRANS-MITTAL NO. b. | ITEM NO c. | SPECIFICATION PARAGRAPH NUMBER d. | DESCRIPTION OF ITEM SUBMITTED e. | TYPE OF SUBMITTAL: DATA f. | DRAWINGS g. | INSTRUCTIONS h. | SCHEDULES i. | STATEMENTS j. | REPORTS k. | CERTIFICATES l. | SAMPLES m. | RECORDS n. | CLASSIFICATION: INFORMATION ONLY o. | GOVERNMENT APPROVED p. | REVIEWER q. | CONTRACTOR SCHEDULE DATES: SUBMIT r. | APPROVAL NEEDED BY s. | MATERIAL NEEDED BY t. | CONTRACTOR ACTION: CODE u. | DATE v. | SUBMIT TO GOVERN-MENT w. | GOVERNMENT ACTION: CODE x. | DATE y. | REMARKS z. |
|---|---|---|---|---|---|---|---|---|---|---|---|---|---|---|---|---|---|---|---|---|---|---|---|---|---|
| | | | | | | | | | | | | | | | | | | | | | | | | | |
| | | | | | | | | | | | | | | | | | | | | | | | | | |
| | | | | | | | | | | | | | | | | | | | | | | | | | |
| | | | | | | | | | | | | | | | | | | | | | | | | | |
| | | | | | | | | | | | | | | | | | | | | | | | | | |
| | | | | | | | | | | | | | | | | | | | | | | | | | |
| | | | | | | | | | | | | | | | | | | | | | | | | | |
| | | | | | | | | | | | | | | | | | | | | | | | | | |
| | | | | | | | | | | | | | | | | | | | | | | | | | |
| | | | | | | | | | | | | | | | | | | | | | | | | | |
| | | | | | | | | | | | | | | | | | | | | | | | | | |
| | | | | | | | | | | | | | | | | | | | | | | | | | |
| | | | | | | | | | | | | | | | | | | | | | | | | | |
| | | | | | | | | | | | | | | | | | | | | | | | | | |
| | | | | | | | | | | | | | | | | | | | | | | | | | |
| | | | | | | | | | | | | | | | | | | | | | | | | | |
| | | | | | | | | | | | | | | | | | | | | | | | | | |
| | | | | | | | | | | | | | | | | | | | | | | | | | |
| | | | | | | | | | | | | | | | | | | | | | | | | | |
| | | | | | | | | | | | | | | | | | | | | | | | | | |
| | | | | | | | | | | | | | | | | | | | | | | | | | |
| | | | | | | | | | | | | | | | | | | | | | | | | | |
| | | | | | | | | | | | | | | | | | | | | | | | | | |
| | | | | | | | | | | | | | | | | | | | | | | | | | |
| | | | | | | | | | | | | | | | | | | | | | | | | | |
| | | | | | | | | | | | | | | | | | | | | | | | | | |
| | | | | | | | | | | | | | | | | | | | | | | | | | |
| | | | | | | | | | | | | | | | | | | | | | | | | | |
| | | | | | | | | | | | | | | | | | | | | | | | | | |
| | | | | | | | | | | | | | | | | | | | | | | | | | |
| | | | | | | | | | | | | | | | | | | | | | | | | | |
| | | | | | | | | | | | | | | | | | | | | | | | | | |
| | | | | | | | | | | | | | | | | | | | | | | | | | |
| | | | | | | | | | | | | | | | | | | | | | | | | | |

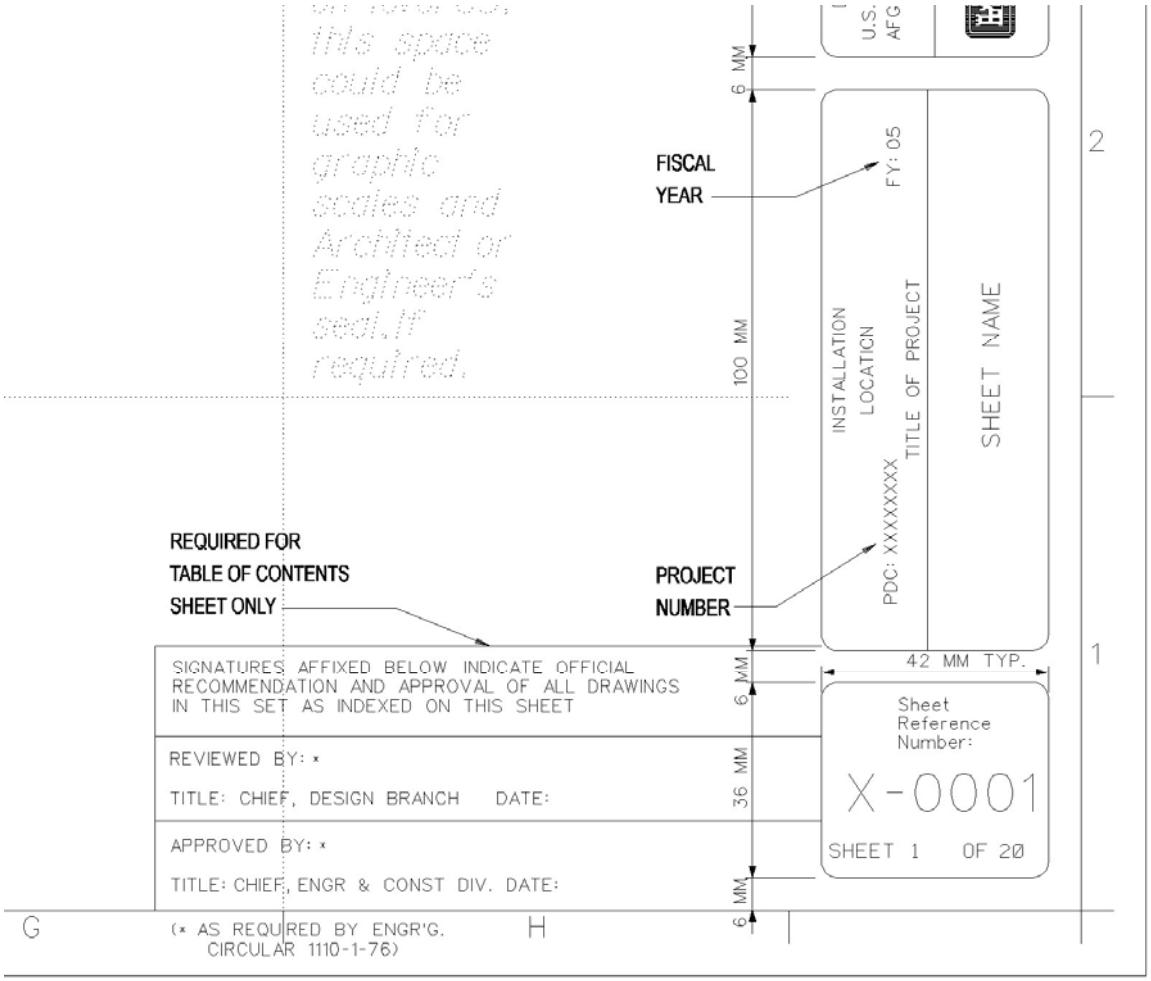


**Figure 1 – sheet number/description; AED title block**

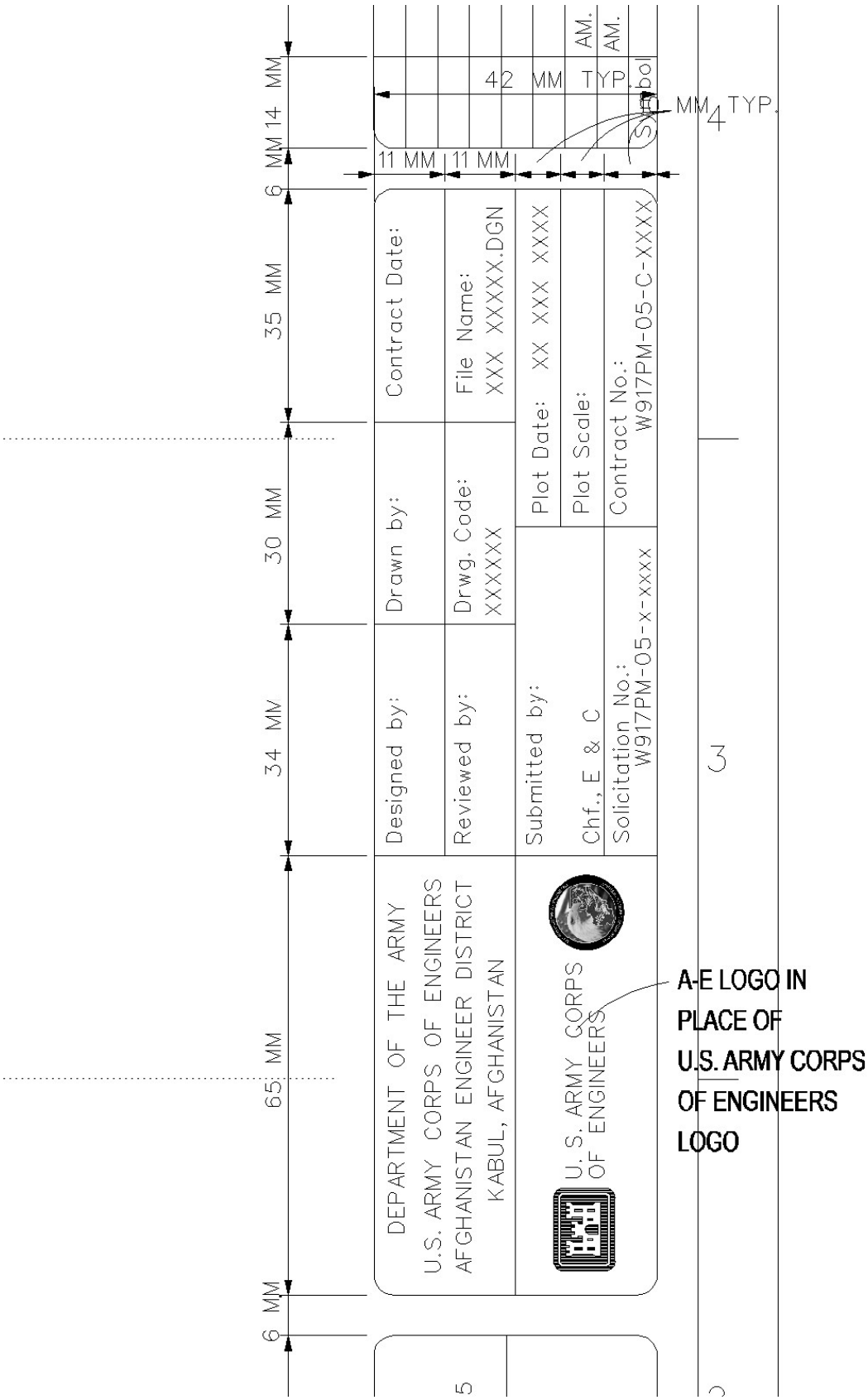


**Figure 2 – A-E logo/designed by/reviewed by; AED title block**

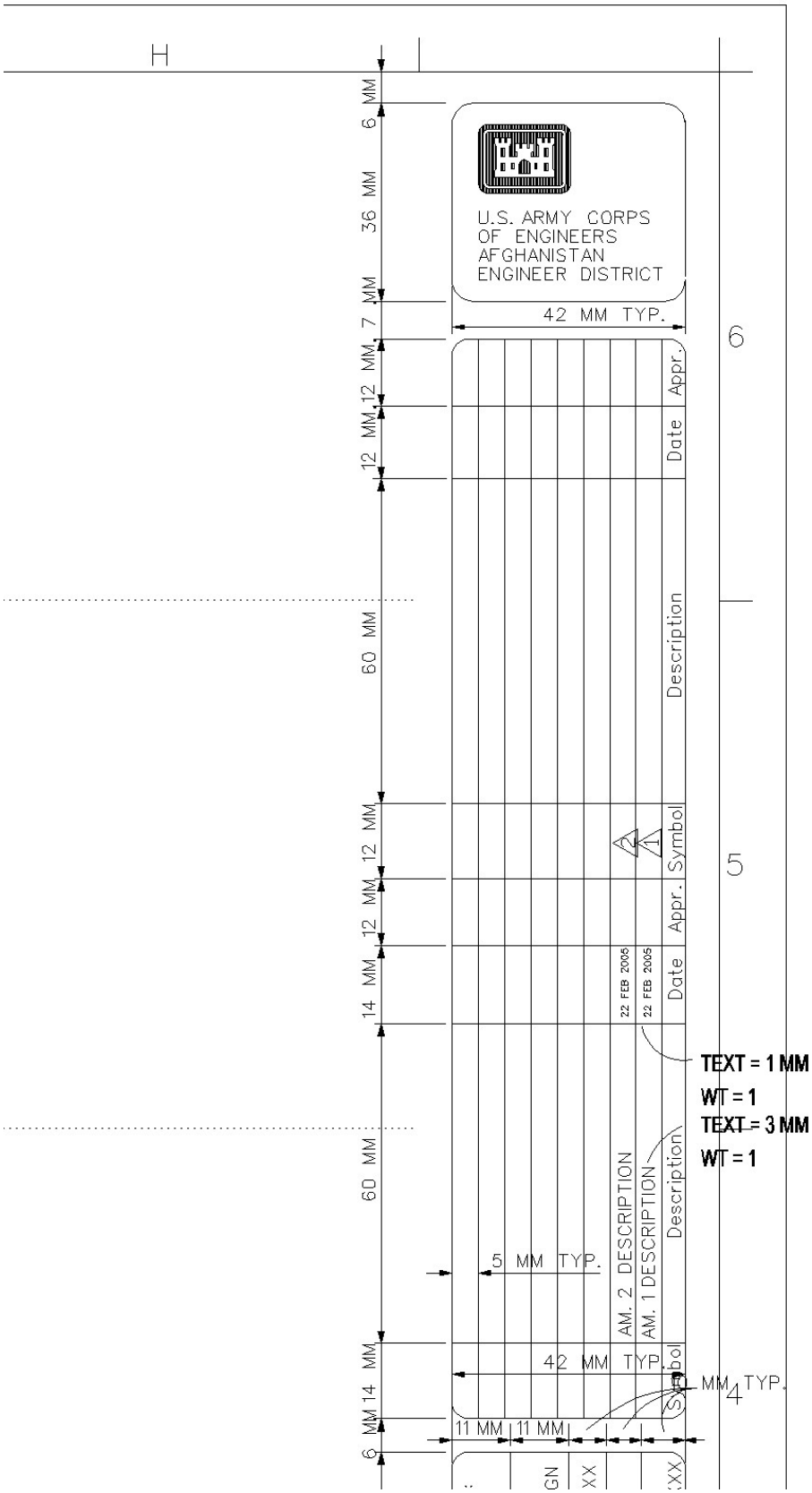


**Figure 3 - revision block; AED title block**

# FINISHED FORMAT SIZE

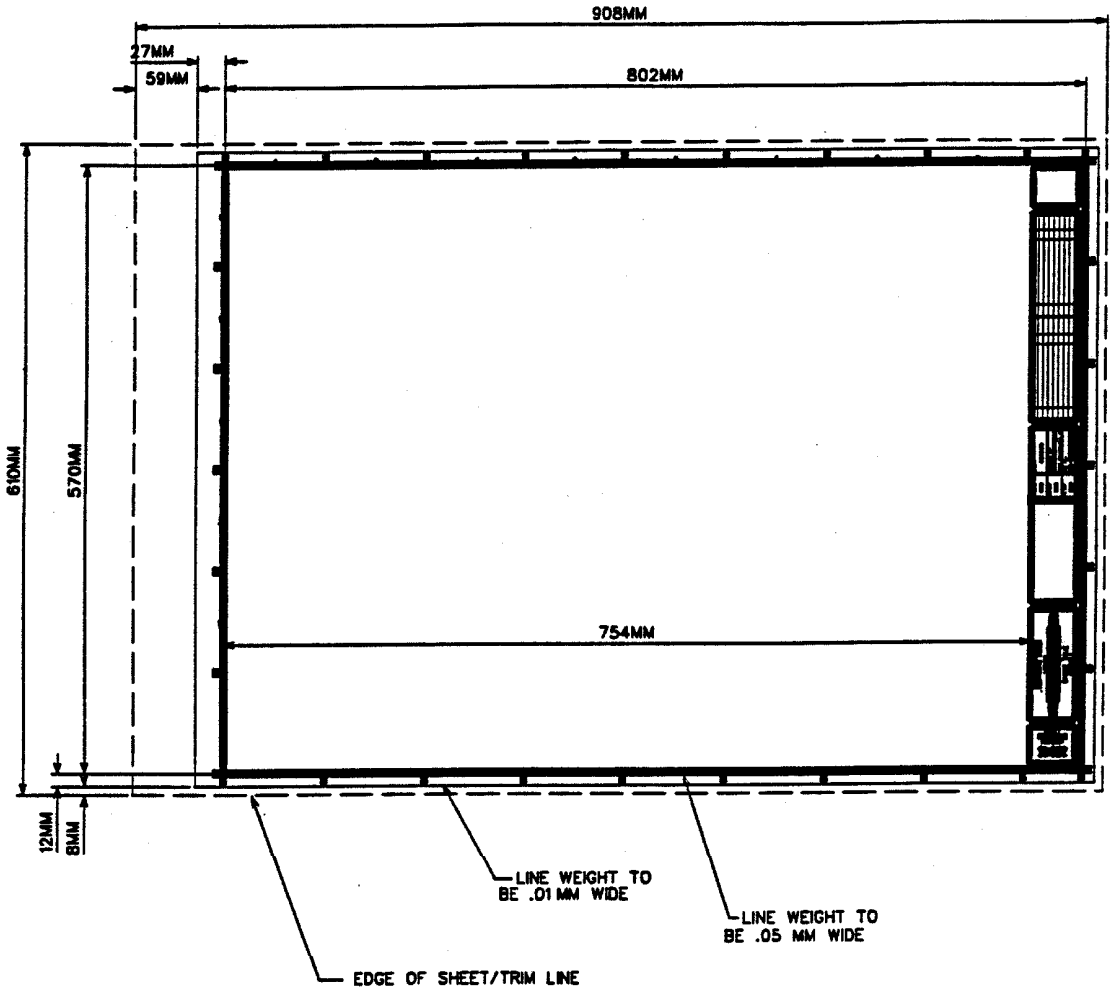


**NOTES:**

1. SEE FIGURES 6 THRU 9 FOR TITLE BLOCK DEFINITIONS.

Figure 5

**SECTION 01415**

**METRIC MEASUREMENTS**

## 1.1 REFERENCES

The publications listed below form a part of this specification to the extent referenced. The publications are referred to within the text by the basic designation only.

ASTM INTERNATIONAL (ASTM)

| | |
|---|---|
| ASTM E 621 | (1994; R 1999e1) Use of Metric (SI) Units in Building Design and Construction (Committee E-6 Supplement to E380) |
| ASTM SI 10 | (2002) American National Standard for Use of the International System of Units (SI): The Modern Metric System |

## 1.2 GENERAL

This project includes metric units of measurements. The metric units used are the International System of Units (SI) developed and maintained by the General Conference on Weights and Measures (CGPM); the name International System of Units and the international abbreviation SI were adopted by the11th CGPM in 1960. A number of circumstances require that both metric SI units and English inch-pound (I-P) units be included in a section of the specifications. When both metric and I-P measurements are included, the section may contain measurements for products that are manufactured to I-P dimensions and then expressed in mathematically converted metric value(soft metric) or, it may contain measurements for products that are manufactured to an industry recognized rounded metric (hard metric)dimensions but are allowed to be substituted by I-P products to comply with the law. Dual measurements are also included to indicate industry and/or Government standards, test values or other controlling factors, such as the code requirements where I-P values are needed for clarity or to trace back to the referenced standards, test values or codes.

## 1.3 USE OF MEASUREMENTS IN SPECIFICATIONS

Measurements in specifications shall be either in SI or I-P units as indicated, except for soft metric measurements or as otherwise authorized. When only SI or I-P measurements are specified for a product, the product shall be procured in the specified units (SI or I-P) unless otherwise authorized by the Contracting Officer. The Contractor shall be responsible for all associated labor and materials when authorized to substitute one system of units for another and for the final assembly and performance of the specified work and/or products.

1.3.1 Hard Metric

A hard metric measurement is indicated by an SI value with no expressed correlation to an I-P value. Hard metric measurements are often used for field data such as distance from one point to another or distance above the floor. Products are considered to be hard metric when they are manufactured to metric dimensions or have an industry recognized metric designation.

1.3.2 Soft Metric

56 A soft metric measurement is indicated by an SI value which is a mathematical conversion of the I-P value shown in parentheses (e.g. 38.1 mm (1-1/2 inches)). Soft metric measurements are used for measurements pertaining to products, test values, and other situations where the I-P units are the standard for manufacture,

verification, or other controlling factor. The I-P value shall govern while the metric measurement is provided for information.

57 A soft metric measurement is also indicated for products that are manufactured in industry designated metric dimensions but are required by law to allow substitute I-P products. These measurements are indicated by a manufacturing hard metric product dimension followed by the substitute I-P equivalent value in parentheses (e.g., 190 x 190 x 390 mm (7-5/8 x 7-5/8 x 15-5/8inches)).

1.3.3 Neutral

A neutral measurement is indicated by an identifier which has no expressed relation to either an SI or an I-P value (e.g., American Wire Gage (AWG) which indicates thickness but in itself is neither SI nor I-P).

**1.4 COORDINATION**

Discrepancies, such as mismatches or product unavailability, arising from use of both metric and non-metric measurements and discrepancies between the measurements in the specifications and the measurements in the drawings shall be brought to the attention of the Contracting Officer for resolution.

**1.5 RELATIONSHIP TO SUBMITTALS**

Submittals for Government approval or for information only shall cover the SI or I-P products actually being furnished for the project. The Contractor shall submit the required drawings and calculations in the same units used in the contract documents describing the product or requirement unless otherwise instructed or approved. The Contractor shall use ASTM SI 10 and ASTM E 621 as the basis for establishing metric measurements required to be used in submittals.

-- End of Section -

# SPECIFICATION SECTION 01451A

# CONTRACTOR QUALITY CONTROL

## PART 1: GENERAL

### 1.1 REFERENCES

The publications listed below form a part of this specification to the extent referenced. The publications are referred to within the text by the basic designation only.

U.S. ARMY CORPS OF ENGINEERS (USACE)

| | |
|---|---|
| ER 1110-1-12 (1993) | Quality Management |
| EM 385-1-1 | Safety and Health Requirements Manual |

### 1.2 PAYMENT

Separate payment will not be made for providing and maintaining an effective Quality Control program, and all costs associated therewith shall be included in the applicable unit prices or lump-sum prices contained in the Bidding Schedule.

## PART 2PRODUCTS (Not Applicable)

## PART 3EXECUTION

### 3.1 GENERAL REQUIREMENTS

The Contractor is responsible for quality control and shall establish and maintain an effective quality control system in compliance with the Contract Clauses and this specification section. The quality control system shall consist of plans, procedures, and organization necessary to produce an end product which complies with the contract requirements. The system shall cover all construction operations, both onsite and offsite, and shall be keyed to the proposed construction sequence. The site project superintendent will be held responsible for the quality of work on the job and is subject to removal by the Contracting Officer for non-compliance with the quality requirements specified in the contract. The site project superintendent in this context shall be the highest level manager responsible for the overall construction activities at the site, including quality and production. The site project superintendent shall maintain a physical presence at the site at all times, except as otherwise acceptable to the Contracting Officer, and shall be responsible for all construction and construction related activities at the site.

### 3.2 QUALITY CONTROL PLAN

The Contractor shall furnish for review by the Government, not later than five (5) days after receipt of Notice-to-Proceed (NTP) the proposed Contractor Quality Control (CQC) Plan. The plan shall identify personnel, procedures, control, instructions, records, and forms to be used.

3.2.1 Content of the CQC Plan

The CQC Plan shall include, as a minimum, the following to cover all construction operations, both on site and off-site, including work by subcontractors, fabricators, suppliers and purchasing agents:

a. A description of the quality control organization, including a chart showing lines of authority and acknowledgment that the CQC staff shall implement the three phase control system for all aspects of the work specified. The staff shall include a CQC System Manager who shall report to the project superintendent.

b. The name, qualifications (in resume format), duties, responsibilities, and authorities of each person assigned a CQC function.

c. A copy of the letter to the CQC System Manager signed by an authorized official of the firm which describes the responsibilities and delegates sufficient authorities to adequately perform the functions of the CQC System Manager, including authority to stop work which is not in compliance with the contract. The CQC System Manager shall issue letters of direction to all other various quality control representatives outlining duties, authorities, and responsibilities. Copies of these letters shall also be furnished to the Government.

d. Procedures for scheduling, reviewing, certifying, and managing submittals, including those of subcontractors, offsite fabricators, suppliers, consultants, and purchasing agents. These procedures shall be in accordance with Specification 01335 SUBMITTAL PROCEDURES.

e. Control, verification, and acceptance testing procedures for each specific test to include the test name, specification paragraph requiring test, feature of work to be tested, test frequency, and person responsible for each test.

f. Procedures for tracking preparatory, initial, and follow-up control phases and control, verification, and acceptance tests including documentation.

g. Procedures for tracking construction deficiencies from identification through acceptable corrective action. These procedures shall establish verification that identified deficiencies have been corrected.

h. Reporting procedures, including proposed reporting formats.

i. A list of the definable features of work. A definable feature of work is a task which is separate and distinct from other tasks, has separate control requirements, and may be identified by different trades or disciplines, or it may be work by the same trade in a different environment. Although each section of the specifications may generally be considered as a definable feature of work, there are frequently more than one definable features under a particular section. This list will be agreed upon during the coordination meeting.

3.2.2 Additional Requirements for Design Quality Control (DQC) Plan

The following additional requirements apply to the Design Quality Control

(DQC) plan:

(1) The Contractor shall provide and maintain a Design Quality Control (DQC) Plan as an effective quality control program which will assure that all services required by this design contract are performed and provided in a manner that meets professional architectural and engineering quality standards. As a minimum, all documents shall be technically reviewed by competent, independent reviewers identified in the DQC Plan. The same element that produced the product shall not perform the independent technical review (ITR). The Contractor shall correct errors and deficiencies in the design documents prior to submitting them to the Government.

(2) The Contractor shall include the design schedule in the master project schedule, showing the sequence of events involved in carrying out the project design tasks within the specific contract period. This should be at a detailed level of scheduling sufficient to identify all major design tasks, including those that control the flow of work. The schedule shall include review and correction periods associated with each item. This should be a forward planning as well as a project monitoring tool. The schedule reflects calendar days and not dates for each activity. If the schedule is changed, the Contractor shall submit a revised schedule reflecting the change within 7 calendar days. The Contractor shall include in the DQC Plan the discipline-specific checklists to be used during the design and quality control of each submittal. These completed checklists shall be submitted at each design phase as part of the project documentation. Exampl echecklists can be found in ER 1110-1-12.

(3) The DQC Plan shall be implemented by an Design Quality Control Manager who has the responsibility of being cognizant of and assuring that all documents on the project have been coordinated. This individual shall be a person who has verifiable engineering or architectural design experience and is a registered professional engineer or architect. The Contractor shall notify the Contracting Officer, in writing, of the name of the individual, and the name of an alternate person assigned to the position.

The Contracting Officer will notify the Contractor in writing of the acceptance of the DQC Plan. After acceptance, any changes proposed by the Contractor are subject to the acceptance of the Contracting Officer.

3.2.3 Acceptance of Plan

Acceptance of the Contractor's plan is required prior to the start of construction. Acceptance is conditional and will be predicated on satisfactory performance during the construction. The Government reserves the right to require the Contractor to make changes in the CQC plan and operations including removal of personnel, as necessary, to obtain the quality specified.

3.2.4 Notification of Changes

Notification of Changes. After acceptance of the QC plan, the Contractor shall notify the Contracting Officer in writing a minimum of seven calendar days prior to any proposed change. Proposed changes are subject to acceptance by the Contracting Officer.

## 3.3 COORDINATION MEETING

After the Pre-construction Conference, before start of construction, and prior to acceptance by the Government of the Quality Control Plan, the Contractor shall meet with the Contracting Officer or Authorized Representative and discuss the Contractor's quality control system. The CQC Plan shall be submitted for review a minimum of 5 calendar days prior to the Coordination Meeting. During the meeting, a mutual understanding of the system details shall be developed, including the forms for recording the CQC operations, control activities, testing, administration of the system for both on-site and off-site work, and the interrelationship of Contractor's Management and control with the Government's Quality Assurance. Minutes of the meeting shall be prepared by the Government and signed by both the Contractor and the Contracting Officer. The minutes shall become a part of the contract file. There may be occasions when subsequent conferences will be called by either party to reconfirm mutual understandings and/or address deficiencies in the CQC system or procedures, which may require corrective action by the Contractor.

## 3.4 QUALITY CONTROL ORGANIZATION

3.4.1 Personnel Requirements

The requirements for the CQC organization are a CQC System Manager, and sufficient number of additional qualified personnel to ensure safety and contract compliance. Personnel identified in the technical provisions as requiring specialized skills to assure the required work is being performed properly will also be included as part of the CQC organization. The Contractor's CQC staff shall maintain a presence at the site at all times during progress of the work and have complete authority and responsibility to take any action necessary to ensure contract compliance. The CQC staff shall be subject to acceptance by the Contracting Officer. The Contractor shall provide adequate office space, filing systems and other resources as necessary to maintain an effective and fully functional CQC organization. Complete records of all letters, material submittals, shop drawing submittals, schedules and all other project documentation shall be promptly furnished to the CQC organization by the Contractor. The CQC organization shall be responsible to maintain these documents and records at the site at all times, except as otherwise acceptable to the Contracting Officer.

3.4.2 CQC System Manager

The Contractor shall identify an individual within his organization at the site of the work who shall be responsible for overall management of the CQC and have the authority to act in all CQC matters for the Contractor. The CQC system manager shall be a graduate engineer, graduate architect, or a graduate construction manager, with experience on construction projects similar in type to this contract OR a construction person with a minimum of ten (10) years in related work. The CQC System Manager shall be on the site at all times during construction and shall be employed by the Contractor. The CQC System Manager shall be assigned no other duties. An alternate for the CQC System Manager will be identified in the plan to serve in the event of the CQC system manager’s absence. The requirements for the alternate will be the same as for the designated CQC manager.

3.4.3 Not Used.

3.4.4 Additional Requirement

In addition to the above experience and/or education requirements, the CQC System Manager shall have completed the course entitled "Construction Quality Management For Contractors". This course is periodically offered by the government, and inquiries as to the next course offering may be directed to the local construction field office.

3.4.5 Organizational Changes

The Contractor shall maintain the CQC staff at full strength at all times. When it is necessary to make changes to the CQC staff, the Contractor shall revise the CQC Plan to reflect the changes and submit the changes to the Contracting Officer for acceptance.

## 3.5 SUBMITTALS AND DELIVERABLES

Submittals, if needed, shall be made as specified in the STR titled SUBMITTAL PROCEDURES. The CQC organization shall be responsible for certifying that all submittals and deliverables are in compliance with the contract requirements.

## 3.6 CONTROL

Contractor Quality Control is the means by which the Contractor ensures that the construction, to include that of subcontractors and suppliers, complies with the requirements of the contract. At least three phases of control shall be conducted by the CQC System Manager for each definable feature of the construction work as follows:

3.6.1 Preparatory Phase.

This phase shall be performed prior to beginning work on each definable feature of work, after all required documents and materials are approved/accepted, and after copies are at the work site. This phase shall include:

a. A review of each paragraph of applicable specifications, reference codes, and standards. A copy of those sections of referenced codes and standards, in the English language unless specifically approved otherwise by the Contracting Officer, applicable to that portion of the work to be accomplished in the field shall be made available by the Contractor at the preparatory inspection. These copies shall be maintained in the field and available for use by Government personnel until final acceptance of the work.

b. A review of the contract drawings.

c. A check to assure that all materials and/or equipment have been tested, submitted, and approved.

d. A check to assure that provisions have been made to provide required control inspection and testing.

e. Examination of the work area to assure that all required preliminary work has been completed and is in compliance with the contract.

f. A physical examination of required materials, equipment, and sample work to verify that they are on hand, conform to approved shop drawings or submitted data, and are properly stored.

g. Reviews of the appropriate activity hazard analysis to ensure safety requirements are met.

h. Discussion of procedures for constructing the work including repetitive deficiencies, construction tolerances and workmanship standards for that feature of work.

i. A check to ensure that the Contracting Officer has accepted the portion of the plan for the work to be performed.

j. Discussion of the initial control phase.

k. The Government shall be notified at least 24 hours in advance of beginning any of the required action of the preparatory phase. This phase shall include a meeting conducted by the CQC system manager and attended by the superintendent, other CQC personnel (as applicable), and the foreman responsible for the definable feature. The results of the preparatory phase actions shall be documented by separate minutes prepared by the CQC system manager and attached to the daily QC report. The Contractor shall instruct applicable workers as to the acceptable level of workmanship required in order to meet contract specifications.

3.6.2 Initial Phase.

This phase shall be accomplished at the beginning of a definable feature of work. The following shall be accomplished:

a. A check of preliminary work to ensure that it is in compliance with contract requirements. Review minutes of the preparatory meeting.

b. Verification of full contract compliance. Verify required control inspection and testing.

c. Establish level of workmanship and verify that it meets minimum acceptable workmanship standards. Compare with sample panels as appropriate.

d. Resolve all differences.

e. Check safety to include compliance with and upgrading of the safety plan and activity hazard analysis. Review the activity analysis with each worker.

f. The Government shall be notified at least 24 hours in advance of beginning the initial phase. Separate minutes of this phase shall be prepared by the CQC system manager and attached to the daily QC report. Exact location of initial phase shall be indicated for future reference and comparison with follow-up phases.

g. The initial phase should be repeated for each new crew to work on-site, or any time acceptable specified quality standards are not being met.

3.6.3 Follow-up Phase.

Daily checks shall be performed to assure continuing compliance with contract requirements, including control testing, until completion of the particular feature of work. The checks shall be made a matter of record in the CQC documentation. Final follow-up checks shall be conducted, and all noted deficiencies corrected, prior to the start of additional features of work that may be affected by the deficient work. The Contractor shall not build upon nor conceal non-conforming work.

3.6.4 Additional Preparatory and Initial Phases

Additional preparatory and initial phases may be required by the Contracting Officer on the same definable features of work if the quality of on-going work is unacceptable; if there are changes in the applicable QC staff or in the on-site production supervision or work crew; if work on a definable feature is resumed after a substantial period of inactivity; or if other problems develop.

## 3.7 TESTS

3.7.1 Testing Procedure

The Contractor shall perform tests specified or required to verify that control measures are adequate to provide a product that conforms to contract requirements. Upon request, the Contractor shall furnish to the Government duplicate samples of test specimens for possible testing by the Government. Costs incidental to the transportation of samples or materials shall be borne by the Contractor.

Testing includes operation and/or acceptance tests when specified. A list of tests to be performed shall be furnished as a part of the CQC plan. The list shall give the test name, frequency, specification paragraph containing the test requirements, the personnel and laboratory responsible for each type of test, and an estimate of the number of tests required. The Contractor shall perform the following activities and record and provide the following data:

a. Verify that testing procedures comply with contract requirements.

b. Verify that facilities and testing equipment are available and comply with testing standards.

c. Check test instrument calibration data against certified standards.

d. Verify that recording forms and test identification control number system, including all of the test documentation requirements, have been prepared.

e. Results of all tests taken, both passing and failing tests, shall be recorded on the Quality Control report for the date taken. Specification paragraph/item reference, location where tests were taken, and the sequential control number identifying the test will be given. Actual test reports may be submitted later, if approved by the Contracting Officer, with a reference to the test number and date taken. An information copy of tests performed by an off-site or commercial test facility will be provided directly to the Contracting Officer. Failure to submit timely test reports, as stated, may result in nonpayment for related work performed and disapproval of the test facility for this contract.

## 3.8 COMPLETION INSPECTION

### 3.8.1 Punch-Out Inspection

Near the end of the work, or any increment of the work established by a time stated in the SPECIAL CONTRACT REQUIREMENTS Clause, "Commencement, Prosecution, and Completion of Work", or by the specifications, the CQC Manager shall conduct an inspection of the work. A punch list of items which do not conform to the approved drawings and specifications shall be prepared and included in the CQC documentation, as required by paragraph DOCUMENTATION. The list of deficiencies shall include the estimated date by which the deficiencies will be corrected. The CQC System Manager or staff shall make a second inspection to ascertain that all deficiencies have been corrected. Once this is accomplished, the Contractor shall notify the Government that the facility is ready for the Government Pre-Final inspection.

### 3.8.2 Pre-Final Inspection

The Government will perform the pre-final inspection to verify that the facility is complete and ready to be occupied. A Government Pre-Final Punch List may be developed as a result of this inspection. The Contractor's CQC System Manager shall ensure that all items on this list have been corrected before notifying the Government, so that a Final inspection with the customer can be scheduled. Any items noted on the Pre-Final inspection shall be corrected in a timely manner. These inspections and any deficiency corrections required by this paragraph shall be accomplished within the time slated for completion of the entire work or any particular increment of the work if the project is divided into increments by separate completion dates.

### 3.8.3 Final Acceptance Inspection

The Contractor's Quality Control Inspection personnel, plus the superintendent or other primary management person, and the Contracting Officer's Representative shall be in attendance at the final acceptance inspection. Additional Government personnel including, but not limited to, those from Base/Post Civil Facility Engineer user groups, and major commands may also be in attendance. The final acceptance inspection will be formally scheduled by the Contracting Officer based upon results of the Pre-Final inspection. Notice shall be given to the Contracting Officer at least 14 days prior to the final acceptance inspection and shall include the Contractor's assurance that all specific items previously identified to the Contractor as being unacceptable, along with all remaining work performed under the contract, will be complete and acceptable by the date scheduled for the final acceptance inspection. Failure of the Contractor to have all contract work acceptably complete for this inspection will be cause for the Contracting Officer to bill the Contractor for the Government's additional inspection cost in accordance with the contract clause titled "Inspection of Construction".

## 3.9 DOCUMENTATION

The Contractor shall maintain current records providing factual evidence that required quality control activities and/or tests have been performed. These records shall include the work of subcontractors and suppliers and shall be on an acceptable form that includes, as a minimum, the following information:

a. Contractor/subcontractor and their area of responsibility.

b. Operating plant/equipment with hours worked, idle, or down for repair.

c. Work performed each day, giving location, description, and by whom. When Network Analysis (NAS) is used, identify each phase of work performed each day by NAS activity number.

d. Test and/or control activities performed with results and references to specifications/drawings requirements. The control phase shall be identified (Preparatory, Initial, Follow-up). List of deficiencies noted, along with corrective action.

e. Quantity of materials received at the site with statement as to acceptability, storage, and reference to specifications/drawings requirements.

f. Submittals and deliverables reviewed, with contract reference, by whom, and action taken.

g. Offsite surveillance activities, including actions taken.

h. Job safety evaluations stating what was checked, results, and instructions or corrective actions.

i. Instructions given/received and conflicts in plans and/or specifications.

j. Contractor's verification statement.

These records shall indicate a description of trades working on the project; the number of personnel working; weather conditions encountered; and any delays encountered. These records shall cover both conforming and deficient features and shall include a statement that equipment and materials incorporated in the work and workmanship comply with the contract. The original and one copy of these records in report form shall be furnished to the Government daily within forty-eight (48) hours after the date covered by the report, except that reports need not be submitted for days on which no work is performed. As a minimum, one report shall be prepared and submitted for every 7 days of no work and on the last day of a no work period. All calendar days shall be accounted for throughout the life of the contract. The first report following a day of no work shall be for that day only. Reports shall be signed and dated by the CQC System Manager. The report from the CQC System Manager shall include copies of test reports and copies of reports prepared by all subordinate quality control personnel.

## 3.10 SAMPLE FORMS

In accordance with Specification 01312 QUALITY CONTROL SYSTEM, the contractor shall use the forms produced by and printed from QCS. Samples of any forms required to meet the requirements of this section which are not produced by that system shall be included in the contractors Quality Control Plan.

## 3.11 NOTIFICATION OF NONCOMPLIANCE

The Contracting Officer will notify the Contractor of any detected noncompliance with the foregoing requirements. The Contractor shall take immediate corrective action after receipt of such notice. Such notice, when delivered to the Contractor at the work site, shall be deemed sufficient for the purpose of notification. If the Contractor fails or refuses to comply promptly, the Contracting Officer may issue an order stopping all or part of the work until satisfactory corrective action has been taken. No part of the time lost due to such stop orders shall be made the subject of claim for extension of time or for excess costs or damages by the Contractor.

-- End of Section --

## SPECIFICATION SECTION 01525

## SAFETY AND OCCUPATIONAL HEALTH REQUIREMENTS

### PART 1 GENERAL

For contractor safety on projects associated with this program, compliance with EM 385-1-1 safety requirements will be the long-term goal reached by growing a safety culture. This compliance will, by necessity, be achieved through a phased-in process. In the Commander's letter at the preface of the EM 385-1-1, he acknowledges that in OCONUS locations, strict compliance with the manual may not be possible – and through the hazard analysis process, safety measures can be developed to attain the same degree of safety.

This specification consists of two parts:

1) Sections 1.1 through 3.12.1, which are the standard safety specifications for work in Europe District and;

2) Appendix A, Phasing approach for safety in emerging countries where there is little or no national safety standards.

### 1.1 REFERENCES

The publications listed below form a part of this specification to the extent referenced. The publications are referred to within the text by the basic designation only.

AMERICAN NATIONAL STANDARDS INSTITUTE (ANSI)

| | |
|---|---|
| ANSI A10.32 | Personal Fall Protection - Safety Requirements for Construction and Demolition Operations |
| ANSI Z359.1(1992; R 1999) | Safety Requirements for Personal Fall Arrest Systems, Subsystems and Components |
| ANSI/ASSE A10.34(2001) | Protection of the Public on or Adjacent to Construction Sites |
| ASME B30.3(1996) | Construction Tower Cranes |

ASME INTERNATIONAL (ASME)

| | |
|---|---|
| ASME B30.22(2000) | Articulating Boom Cranes |
| ASME B30.5(2004) | Mobile and Locomotive Cranes |

NATIONAL FIRE PROTECTION ASSOCIATION (NFPA)

| | |
|---|---|
| NFPA 10(2002) | Portable Fire Extinguishers |

| | |
|---|---|
| NFPA 241(2000) | Safeguarding Construction, Alteration, and Demolition Operations |
| NFPA 51B(2003) | Fire Prevention During Welding, Cutting, and Other Hot Work |
| NFPA 70(2005) | National Electrical Code |
| NFPA 70E(2004) | Electrical Safety in the Workplace |

U.S. ARMY CORPS OF ENGINEERS (USACE)

| | |
|---|---|
| EM 385-1-1(2003) Safety | Safety and Health Requirements |

U.S. NATIONAL ARCHIVES AND RECORDS ADMINISTRATION (NARA)

| | |
|---|---|
| 29 CFR 1910 | Occupational Safety and Health Standards (OSHA) |
| 29 CFR 1910.146 | Permit-required Confined Spaces |
| 29 CFR 1915 | Confined and Enclosed Spaces and Other Dangerous Atmospheres in Shipyard Employment |
| 29 CFR 1919 | Gear Certification |
| 29 CFR 1926 | Safety and Health Regulations for Construction |
| 29 CFR 1926.500 | Fall Protection |

## 1.2 SUBMITTALS

Government approval is required for submittals with a "G" designation; submittals not having a "G" designation are for information only. When used, a designation following the "G" designation identifies the office that will review the submittal for the Government. The following shall be submitted in accordance with SR SUBMITTAL PROCEDURES:

SD-01 Preconstruction Submittals

Accident Prevention Plan (APP); G, ACC

Activity Hazard Analysis (AHA); G, ACC

Crane Critical Lift Plan; G, ACC

Proof of qualification for Crane Operators; G, ACC

SD-06 Test Reports

Reports: Submit reports as their incidence occurs, in accordance with the requirements of the paragraph entitled, "Reports."

Accident Reports

Monthly Exposure Reports

Crane Reports

Regulatory Citations and Violations

SD-07 Certificates

Confined Space Entry Permit

Contractor Safety Self-Evaluation Checklist; G, ACC

Submit one copy of each permit/certificate attached to each Daily Quality Control Report.

## 1.3 DEFINITIONS

a. Competent Person for Fall Protection. A person who is capable of identifying hazardous or dangerous conditions in the personal fall arrest system or any component thereof, as well as their application and use with related equipment, and has the authority to take prompt corrective measures to eliminate the hazards of falling.

b. High Visibility Accident. Any mishap which may generate publicity and/or high visibility.

c. Medical Treatment. Treatment administered by a physician or by registered professional personnel under the standing orders of a physician. Medical treatment does not include first aid treatment even through provided by a physician or registered personnel.

d. Qualified Person for Fall Protection. A person with a recognized degree or professional certificate, extensive knowledge, training and experience in the field of fall protection who is capable of performing design, analysis, and evaluation of fall protection systems and equipment.

e. Recordable Injuries or Illnesses. Any work-related injury or illness that results in:

(1) Death, regardless of the time between the injury and death, or the length of the illness;

(2) Days away from work (any time lost after day of injury/illness onset);

(3) Restricted work;

(4) Transfer to another job;

(5) Medical treatment beyond first aid;

(6) Loss of consciousness; or

(7) A significant injury or illness diagnosed by a physician or other licensed health care professional, even if it did not result in (1) through (6) above.

f. "USACE" property and equipment specified in USACE EM 385-1-1 should be interpreted as Government property and equipment.

## 1.4 DRUG PREVENTION PROGRAM

Conduct a proactive drug and alcohol use prevention program for all workers, prime and subcontractor, on the site. Ensure that no employee uses illegal drugs or consumes alcohol during work hours. Ensure there are no employees under the influence of drugs or alcohol during work hours. After accidents, collect blood, urine, or saliva specimens and test the injured and involved employees for the influence of drugs and alcohol. A copy of the test shall be made available to the Contracting Officer upon request.

## 1.5 REGULATORY REQUIREMENTS

In addition to the detailed requirements included in the provisions of this contract, work performed shall comply with USACE EM 385-1-1, and in particular, the requirements of the European Union Council Directive 92/57/EEC of 24 June 1992 on the implementation of minimum safety and health requirements at temporary or mobile construction sites. Submit matters of interpretation of standards to the appropriate administrative agency for resolution before starting work. Where the requirements of this specification, applicable laws, criteria, ordinances, regulations, and referenced documents vary, the most stringent requirements shall apply.

## 1.6 SITE QUALIFICATIONS, DUTIES AND MEETINGS

### 1.6.1 Personnel Qualifications

#### 1.6.1.1 Site Safety and Health Officer (SSHO)

Site Safety and Health Officer (SSHO) shall be provided at the work site at all times to perform safety and occupational health management, surveillance, inspections, and safety enforcement for the Contractor. The Contractor Quality Control (QC) person can only be the SSHO on this project if approved by the Contracting Officer. Any project exceeding 1 Million US dollars in value shall have a full time SSHO. The SSHO shall meet the following requirements: A minimum of 5 years safety work on similar projects; 30-hour OSHA construction safety class or European Union equivalent within the last 5 years; an average of at least 24 hours of formal safety training each year for the past 5 years. Competent person training as needed.

#### 1.6.1.2 Competent Person for Confined Space Entry

Provide a competent person meeting the requirements of EM 385-1-1 who is assigned in writing by the Government Designated Authority (GDA) to assess confined spaces and who possesses demonstrated knowledge, skill and ability to:

a. Identify the structure, location, and designation of confined and permit-required confined spaces where work is done;

b. Calibrate and use testing equipment including but not limited to, oxygen indicators, combustible gas indicators, carbon monoxide indicators, and carbon dioxide indicators, and to interpret accurately the test results of that equipment;

c. Perform all required tests and inspections specified in Section 06.I of EM 385-1-1;

d. Assess hazardous conditions including atmospheric hazards in confined space and adjacent spaces and specify the necessary protection and precautions to be taken;

e. Determine ventilation requirements for confined space entries and operations;

f. Assess hazards associated with hot work in confined and adjacent space and determine fire watch requirements; and,

g. Maintain records required.

#### 1.6.1.3 Crane Operators

Crane operators shall meet the requirements in USACE EM 385-1-1, Section 16 and Appendix G. In addition, crane operators shall be designated as qualified by a source that qualifies crane operators

(i.e., union, a government agency, or and organization that tests and qualifies crane operators). Proof of current qualification shall be provided.

1.6.2 Personnel Duties

1.6.2.1 Site Safety and Health Officer (SSHO)/Superintendent

a. Conduct daily safety and health inspections and maintain a written log which includes area/operation inspected, date of inspection, identified hazards, recommended corrective actions, estimated and actual dates of corrections. Safety inspection logs shall be attached to the Contractors' daily quality control report.

b. Conduct mishap investigations and complete required reports. Maintain an accident/injury log such as the OSHA Form 300 or host nation equivalent, and Daily Production reports for prime and sub-contractors.

c. Maintain applicable safety reference material on the job site.

d. Attend the pre-construction conference, pre-work meetings including preparatory inspection meeting, and periodic in-progress meetings.

e. Implement and enforce accepted APPS and AHAs.

f. Maintain a safety and health deficiency tracking system that monitors outstanding deficiencies until resolution. A list of unresolved safety and health deficiencies shall be posted on the safety bulletin board.

g. Ensure sub-contractor compliance with safety and health requirements.

Failure to perform the above duties will result in dismissal of the superintendent and/or SSHO, and a project work stoppage. The project work stoppage will remain in effect pending approval of a suitable replacement.

1.6.3 Meetings

1.6.3.1 Preconstruction Conference

a. Contractor representatives who have a responsibility or significant role in accident prevention on the project shall attend the preconstruction conference. This includes the project superintendent, site safety and health officer, quality control supervisor, or any other assigned safety and health professionals who participated in the development of the APP (including the Activity Hazard Analyses (AHAs) and special plans, program and procedures associated with it).

b. The Contractor shall discuss the details of the submitted APP to include incorporated plans, programs, procedures and a listing of anticipated AHAs that will be developed and implemented during the performance of the contract. This list of proposed AHAs will be reviewed at the conference and an agreement will be reached between the Contractor and the Contracting Officer's representative as to which phases will require an analysis. In addition, a schedule for the preparation, submittal, review, and acceptance of AHAs shall be established to preclude project delays.

c. Deficiencies in the submitted APP will be brought to the attention of the Contractor at the preconstruction conference, and the Contractor shall revise the plan to correct deficiencies and re-submit it for acceptance. Work shall not begin until there is an accepted APP.

d. The functions of a Preconstruction conference may take place at the Post-Award Kickoff meeting for Design Build Contracts.

1.6.3.2 Safety Meetings

Shall be conducted and documented as required by EM 385-1-1. Minutes showing contract title, signatures of attendees and a list of topics discussed shall be attached to the Contractors' daily quality control report.

## 1.7 TRAINING

1.7.1 New Employee Indoctrination

New employees (prime and sub-contractor) will be informed of specific site hazards before they begin work. Documentation of this orientation shall be kept on file at the project site.

1.7.2 Periodic Training

Provide Safety and Health Training in accordance with USACE EM 385-1-1 and the accepted APP. Ensure all required training has been accomplished for all onsite employees.

1.7.3 Training on Activity Hazard Analysis (AHA)

Prior to beginning a new phase, training will be provided to all affected

## 1.8 ACCIDENT PREVENTION PLAN (APP)

The Contractor shall use a qualified person to prepare the written site-specific APP in both English and in the host nation language. Prepare the APP in accordance with the format and requirements of USACE EM 385-1-1 and as supplemented herein. Cover all paragraph and subparagraph elements in USACE EM 385-1-1, Appendix A, "Minimum Basic Outline for Accident Prevention Plan". Specific requirements for some of the APP elements are described below. The APP shall be job-specific and shall address any unusual or unique aspects of the project or activity for which it is written. The APP shall interface with the Contractor's overall safety and health program. Any portions of the Contractor's overall safety and health program referenced in the APP shall be included in the applicable APP element and made site-specific. The Government considers the Prime Contractor to be the "controlling authority" for all work site safety and health of the subcontractors. Contractors are responsible for informing their subcontractors of the safety provisions under the terms of the contract and the penalties for noncompliance, coordinating the work to prevent one craft from interfering with or creating hazardous working conditions for other crafts, and inspecting subcontractor operations to ensure that accident prevention responsibilities are being carried out. The APP shall be signed by the person and firm (senior person) preparing the APP, the Contractor, the on-site superintendent, the designated site safety and health officer.

Submit the APP to the Contracting Officer 15 calendar days prior to the date of the preconstruction conference for acceptance. Work cannot proceed without an accepted APP.

Once accepted by the Contracting Officer, the APP and attachments will be enforced as part of the contract. Disregarding the provisions of this contract or the accepted APP will be cause for stopping of work, at the discretion of the Contracting Officer, until the matter has been rectified.

Once work begins, changes to the accepted APP shall be made with the knowledge and concurrence of the Contracting Officer, project superintendent, SSHO and quality control manager. Should any hazard become evident, stop work in the area, secure the area, and develop a plan to remove the hazard. Notify the Contracting Officer within 24 hours of discovery. In the interim, all necessary

action shall be taken to restore and maintain safe working conditions in order to safeguard onsite personnel, visitors, the public, and the environment.

Copies of the accepted plan will be maintained at the Contracting Officer's office and at the job site.

The APP shall be continuously reviewed and amended, as necessary, throughout the life of the contract. Unusual or high-hazard activities not identified in the original APP shall be incorporated in the plan as they are discovered.

1.8.1 EM 385-1-1 Contents

In addition to the requirements outlines in Appendix A of USACE EM 385-1-1, the following is required:

a. Names and qualifications (resumes including education, training, experience and certifications) of all site safety and health personnel designated to perform work on this project to include the designated site safety and health officer and other competent and qualified personnel to be. The duties of each position shall be specified.

b. Qualifications of competent and of qualified persons. As a minimum, competent persons shall be designated and qualifications submitted for each of the following major areas: excavation; scaffolding; fall protection; hazardous energy; confined space; health hazard recognition, evaluation and control of chemical, physical and biological agents; personal protective equipment and clothing to include selection, use and maintenance.

c. Confined Space Entry Plan. Develop a confined space entry plan in accordance with USACE EM 385-1-1, Section 06.I, and any other federal, state and local regulatory requirements identified in this contract. Identify the qualified person's name and qualifications, training, and experience. Delineate the qualified person's authority to direct work stoppage in the event of hazardous conditions. Include procedure for rescue by contractor personnel and the coordination with emergency responders. (If there is no confined space work, include a statement that no confined space work exists and none will be created.)

d. Crane Critical Lift Plan. Prepare and sign weight handling critical lift plans for lifts over 75 percent of the capacity of the crane or hoist (or lifts over 50 percent of the capacity of a barge mounted mobile crane's hoists) at any radius of lift; lifts involving more than one crane or hoist; lifts of personnel; and lifts involving non-routine rigging or operation, sensitive equipment, or unusual safety risks. The plan shall be submitted 15 calendar days prior to on-site work and include the requirements of USACE EM 385-1-1, paragraph 16.C.18. and the following:

(1) For lifts of personnel, the plan shall demonstrate compliance with the requirements of EM 385-1-1, Section 22.F.

(2) For barge mounted mobile cranes, barge stability calculations identifying barge list and trim based on anticipated loading; and load charts based on calculated list and trim. The amount of list and trim shall be within the crane manufacturer's requirements.

e. Fall Protection and Prevention (FP&P) Plan. The plan shall be site specific and address all fall hazards in the work place and during different phases of construction. It shall address how to protect and prevent workers from falling to lower levels when they are exposed to fall hazards above 1.8 m (6 feet). A qualified person for fall protection shall prepare and sign the plan. The plan shall include fall protection and prevention systems, equipment and methods employed for every phase of work, responsibilities, assisted rescue, self-rescue and evacuation procedures, training requirements, and monitoring methods. Fall Protection and

Prevention Plan shall be revised every six months for lengthy projects, reflecting any changes during the course of construction due to changes in personnel, equipment, systems or work habits. The accepted Fall Protection and Prevention Plan shall be kept and maintained at the job site for the duration of the project. The Fall Protection and Prevention Plan shall be included in the Accident Prevention Plan (APP).

## 1.9 ACTIVITY HAZARD ANALYSIS (AHA)

The Activity Hazard Analysis (AHA) format shall be in accordance with USACE EM 385-1-1, and shall be written in both English and the host nation language. Submit the AHA for review at least 15 calendar days prior to the start of each phase. Format subsequent AHAs as amendments to the APP. The analysis should be used during daily inspections to ensure the implementation and effectiveness of the activity's safety and health controls.

The AHA list will be reviewed periodically (at least monthly) at the Contractor supervisory safety meeting and updated as necessary when procedures, scheduling, or hazards change.

The activity hazard analyses shall be developed using the project schedule as the basis for the activities performed. Any activities listed on the project schedule will require an AHA. The AHAs will be developed by the contractor, supplier or subcontractor and provided to the prime contractor for submittal to the Contracting Officer.

## 1.10 DISPLAY OF SAFETY INFORMATION

Within 1 calendar day after commencement of work, erect a safety bulletin board at the job site. The safety bulletin board shall include information and be maintained as required by EM 385-1-1, section 01.A.06.

## 1.11 SITE SAFETY REFERENCE MATERIALS

Maintain safety-related references applicable to the project. Maintain applicable equipment manufacturer's manuals.

## 1.12 EMERGENCY MEDICAL TREATMENT

Contractors will arrange for their own emergency medical treatment. The Government has no responsibility to provide emergency medical treatment. Military medical clinics may provide emergency treatment for serious injuries; the contractor is responsible for coordination with the local military medical clinic prior to mobilization.

## 1.13 REPORTS

### 1.13.1 Accident Reports

For recordable injuries and illnesses, and property damage accidents resulting in at least $2,000 in damages, the Prime Contractor shall conduct an accident investigation to establish the root cause(s) of the accident, complete the USACE Accident Report Form 3394 and provide the report to the Contracting Officer within 5 calendar day(s) of the accident. The Contracting Officer will provide copies of any required or special forms.

### 1.13.2 Accident Notification

Notify the Contracting Officer as soon as practical, but not later than four hours, after any accident meeting the definition of Recordable Injuries or Illnesses or High Visibility Accidents, property damage equal to or greater than $2,000. Information shall include contractor name; contract title;

type of contract; name of activity, installation or location where accident occurred; date and time of accident; names of personnel injured; extent of property damage, if any; extent of injury, if known, and brief description of accident (to include type of construction equipment used, PPE used, etc.). Preserve the conditions and evidence on the accident site until the Government investigation team arrives on-site and Government investigation is conducted.

1.13.3 Monthly Exposure Reports

Monthly exposure reporting to the Contracting Officer is required to be attached to the monthly billing request. This report is a compilation of employee-hours worked each month for all site workers, both prime and subcontractor. The Contracting Officer will provide copies of any special forms.

1.13.4 Crane Reports

Submit crane inspection reports required in accordance with USACE EM 385-1-1, Appendix H and as specified herein with Daily Reports of Inspections.

## 1.14 HOT WORK

Prior to performing "Hot Work" (welding, cutting, etc.) or operating other flame-producing/spark producing devices, a written permit shall be requested from the Installation. CONTRACTORS ARE REQUIRED TO MEET ALL CRITERIA BEFORE A PERMIT IS ISSUED. The Contractor will provide at least two (2) six kilogram ABC rated extinguishers for normal "Hot Work". All extinguishers shall be current inspection tagged, approved safety pin and tamper resistant seal. It is also mandatory to have a designated FIRE WATCH for any "Hot Work" done at this activity. The Fire Watch shall be trained in fire fighting techniques and remain on-site for a minimum of 120 minutes after completion of the task or as specified on the hot work permit.

When starting work in the facility, Contractors shall require their personnel to familiarize themselves with the location of the nearest fire alarm boxes and place in memory the emergency phone numbers. ANY FIRE, NO MATTER HOW SMALL, SHALL BE REPORTED TO THE RESPONSIBLE FIRE DIVISION/DEPARTMENT IMMEDIATELY.

# PART 2 PRODUCTS

Not used.

# PART 3 EXECUTION

## 3.1 CONSTRUCTION AND/OR OTHER WORK

Before initiation of work at the job site, an accident prevention plan, written by the Contractor for the specific work and hazards of the contract and implementing in detail the pertinent requirements of EM 385-1-1, will be reviewed and found acceptable by designated Government personnel. Specific requirements for development of the accident prevention plan are found in sections 01.A and Appendix A of EM 385-1-1.

Before beginning each activity involving a type of work presenting hazards not experienced in previous project operations or where a new work crew or subcontractor is to perform the work, activity hazard analysis (AHA) shall be prepared by the Contractor performing the work activity. See paragraph 01.A.09 of EM 385-1-1.

The Contractor shall require subcontractors to submit their plan of operations showing methods they propose to use in accomplishing major phases of work.

The Contractor shall be prepared to discuss the plans in conferences convened by the Contracting Officer prior to starting work on each major phase of operation. Plans shall include all pertinent information such as layout of haul roads, access roads, storage areas, electrical distribution lines, methods of providing minimum exposure to overhead loads, and methods of access to work areas. The plan for accomplishing the initial work phase shall be submitted within 15 calendar days after award of the contract. Plans for subsequent major phases of work shall be submitted not later than 15 calendar days prior to initiation of work on each major phase.

All areas where construction, demolition, alteration, building, or similarly related activities take place, all workers shall have the following minimum personal protective clothing and equipment:

1. Short sleeve shirt.
2. Long trousers.
3. Steel-toed safety boots.
4. Hard hat.

3.1.1 Falling Object Protection

All areas must be barricaded to safeguard employees. When working overhead, barricade the area below to prevent entry by unauthorized employees. Construction warning tape and signs shall be posted so they are clearly visible from all possible access points. When employees are working overhead all tools and equipment shall be secured so that they will not fall. When using guardrail as falling object protection, all openings shall be small enough to prevent passage of potential falling objects.

3.1.2 Hazardous Material Use

Each hazardous material must receive approval prior to being brought onto the job site or prior to any other use in connection with this contract. Allow a minimum of 10 working days for processing of the request for use of a hazardous material. Any work or storage involving hazardous chemicals or materials must be done in a manner that will not expose Government or Contractor employees to any unsafe or unhealthful conditions. Adequate protective measures must be taken to prevent Government or Contractor employees from being exposed to any hazardous condition that could result from the work or storage. The Prime Contractor shall keep a complete inventory of hazardous materials brought onto the work-site. Approval by the Contracting Officer of protective measures and storage area is required prior to the start of the work.

3.1.3 Hazardous Material Exclusions

Notwithstanding any other hazardous material used in this contract, radioactive materials or instruments capable of producing ionizing/non-ionizing radiation (with the exception of radioactive material and devices used in accordance with USACE EM 385-1-1 such as nuclear density meters for compaction testing and laboratory equipment with radioactive sources) as well as materials which contain asbestos, mercury or polychlorinated biphenyls, di-isocynates, lead-based paint are prohibited. The Contracting Officer, upon written request by the Contractor, may consider exceptions to the use of any of the above excluded materials.

3.1.4 Unforeseen Hazardous Material

The design should have identified materials such as PCB, lead paint, and friable and non-friable asbestos. If material, not indicated, that may be hazardous to human health upon disturbance during construction operations is encountered, stop that portion of work and notify the Contracting Officer immediately. Within 14 calendar days the Government will determine if the material is hazardous. If material is not hazardous or poses no danger, the Government will direct the Contractor to proceed without change. If material is hazardous and handling of the material is necessary to accomplish the

work, the Government will issue a modification pursuant to "FAR 52.243-4, Changes" and "FAR 52.236-2, Differing Site Conditions."

## 3.2 FALL HAZARD PROTECTION AND PREVENTION PROGRAM

The Contractor shall establish a fall protection and prevention program, for the protection of all employees exposed to fall hazards. The program shall include company policy, identify responsibilities, education and training requirements, fall hazard identification, prevention and control measures, inspection, storage, care and maintenance of fall protection equipment and rescue and evacuation procedures.

### 3.2.1 Training

The Contractor shall institute a fall protection training program. As part of the Fall Hazard Protection and Prevention Program, the Contractor shall provide training for each employee who might be exposed to fall hazards. A competent person for fall protection shall provide the training. Training requirements shall be in accordance with USACE EM 385-1-1, section 21.A.16.

### 3.2.2 Fall Protection Equipment and Systems

The Contractor shall enforce use of the fall protection equipment and systems designated for each specific work activity in the Fall Protection and Prevention Plan and/or AHA at all times when an employee is exposed to a fall hazard. Employees shall be protected from fall hazards as specified in EM 385-1-1, section 21. In addition to the required fall protection systems, safety skiff, personal floatation devices, life rings etc., are required when working above or next to water in accordance with USACE EM 385-1-1, paragraphs 05.H. and 05.I. Personal fall arrest systems are required when working from an articulating or extendible boom, swing stages, or suspended platform. In addition, personal fall arrest systems are required when operating other equipment such as scissor lifts if the work platform is capable of being positioned outside the wheelbase. The need for tying-off in such equipment is to prevent ejection of the employee from the equipment during raising, lowering, or travel. Fall protection must comply with USACE EM 385-1-1 and host nation requirements, whichever is more stringent.

#### 3.2.2.1 Personal Fall Arrest Equipment

Personal fall arrest equipment, systems, subsystems, and components shall meet ANSI Z359.1 or European Union equivalent. Only a full-body harness with a shock-absorbing lanyard or self-retracting lanyard is an acceptable personal fall arrest body support device. Body belts may only be used as a positioning device system (for uses such as steel reinforcing assembly and in addition to an approved fall arrest system). Harnesses shall have a fall arrest attachment affixed to the body support (usually a Dorsal D-ring) and specifically designated for attachment to the rest of the system. Only locking snap hooks and carabiners shall be used. Webbing, straps, and ropes shall be made of synthetic fiber. The maximum free fall distance when using fall arrest equipment shall not exceed 1.8 m (6 feet). The total fall distance and any swinging of the worker (pendulum-like motion) that can occur during a fall shall always be taken into consideration when attaching a person to a fall arrest system.

### 3.2.3 Fall Protection for Roofing Work

Fall protection controls shall be implemented based on the type of roof being constructed and work being performed. The roof area to be accessed shall be evaluated for its structural integrity including weight-bearing capabilities for the projected loading.

a. Low Sloped Roofs:

(1) For work within 1.8 m (6 feet) of an edge, on low-slope roofs, personnel shall be protected from falling by use of personal fall arrest systems, guardrails, or safety nets. A safety monitoring system is not adequate fall protection and is not authorized.

(2) For work greater than 1.8 m (6 feet) from an edge, warning lines shall be erected and installed in accordance with USACE EM 385-1-1.

b. Steep-Sloped Roofs: Work on steep-sloped roofs requires a personal fall arrest system, guardrails with toe-boards, or safety nets. This requirement also includes residential or housing type construction.

3.2.4 Existing Anchorage

Existing anchorages, to be used for attachment of personal fall arrest equipment, shall be certified (or re-certified) by a qualified person for fall protection in accordance with ANSI Z359.1 or European Union equivalent. Exiting horizontal lifeline anchorages shall be certified (or re-certified) by a registered professional engineer with experience in designing horizontal lifeline systems.

3.2.5 Horizontal Lifelines

Horizontal lifelines shall be designed, installed, certified and used under the supervision of a qualified person for fall protection as part of a complete fall arrest system which maintains a safety factor of 2.

3.2.6 Guardrails and Safety Nets

Guardrails and safety nets shall be designed, installed and used in accordance with EM 385-1-1 or Host Nation requirements, whichever is more stringent.

3.2.7 Rescue and Evacuation Procedures

When personal fall arrest systems are used, the contractor must ensure that the mishap victim can self-rescue or can be rescued promptly should a fall occur. A Rescue and Evacuation Plan shall be prepared by the contractor and include a detailed discussion of the following: methods of rescue; methods of self-rescue; equipment used; training requirement; specialized training for the rescuers; procedures for requesting rescue and medical assistance; and transportation routes to a medical facility. The Rescue and Evacuation Plan shall be included in the Activity Hazard Analysis (AHA) for the phase of work, in the Fall Protection and Prevention (FP&P) Plan, and the Accident Prevention Plan (APP).

## 3.3 SCAFFOLDING

Employees shall be provided with a safe means of access to the work area on the scaffold. Climbing of any scaffold braces or supports not specifically designed for access is prohibited. Access to scaffold platforms greater than 6 m in height shall be accessed by use of a scaffold stair system. Vertical ladders commonly provided by scaffold system manufacturers shall not be used for accessing scaffold platforms greater than 6 m in height. The use of an adequate gate is required. Contractor shall ensure that employees are qualified to perform scaffold erection and dismantling. Do not use scaffold without the capability of supporting at least four times the maximum intended load or without appropriate fall protection as delineated in the accepted fall protection and prevention plan. Stationary scaffolds must be attached to structural building components to safeguard against tipping forward or backward. Special care shall be given to ensure scaffold systems are not overloaded. Side brackets used to extend scaffold platforms on self-supported scaffold systems for the storage of material is prohibited. The first tie-in shall be at the height equal to 4 times the width of the smallest dimension of the scaffold base. Work platforms shall be placed on mud sills. Scaffold or work platform erectors shall have fall protection during the erection and dismantling of scaffolding or work

platforms that are more than six feet. Delineate fall protection requirements when working above six feet or above dangerous operations in the Fall Protection and Prevention (FP&P) Plan and Activity Hazard Analysis (AHA) for the phase of work.

## 3.4 EQUIPMENT

### 3.4.1 Material Handling Equipment

a. Material handling equipment such as forklifts shall not be modified with work platform attachments for supporting employees unless specifically delineated in the manufacturer's printed operating instructions.

b. The use of hooks on equipment for lifting of material must be in accordance with manufacturer's printed instructions.

c. Operators of forklifts or power industrial trucks shall be trained/licensed in accordance with Host Nation requirements.

### 3.4.2 Weight Handling Equipment

a. Cranes and derricks shall be equipped as specified in EM-385-1-1 section 16.

b. The Contractor shall notify the Contracting Officer 15 days in advance of any cranes entering the activity so that necessary quality assurance spot checks can be coordinated. Contractor's operator shall remain with the crane during the spot check.

c. The Contractor shall comply with the crane manufacturer's specifications and limitations for erection and operation of cranes and hoists used in support of the work. Erection shall be performed under the supervision of a designated person. All testing shall be performed in accordance with the manufacturer's recommended procedures.

d. Under no circumstance shall a Contractor make a lift at or above 90% of the cranes rated capacity in any configuration.

e. When operating in the vicinity of overhead transmission lines, operators and riggers shall be alert to this special hazard and shall follow the requirements of USACE EM 385-1-1 section 11.

f. Crane suspended personnel work platforms (baskets) shall not be used unless the Contractor proves to the satisfaction of the Contracting Officer that using any other access to the work location would provide a greater hazard to the workers or is impossible. Personnel shall not be lifted with a line hoist or friction crane.

g. Portable fire extinguishers shall be inspected, maintained, and recharged.

h. All employees shall be kept clear of loads about to be lifted and of suspended loads.

i. The Contractor shall use cribbing when performing lifts on outriggers.

j. The crane hook/block must be positioned directly over the load. Side loading of the crane is prohibited.

k. A physical barricade must be positioned to prevent personnel from entering the counterweight swing (tail swing) area of the crane.

l. Certification records which include the date of inspection, signature of the person performing the inspection, and the serial number or other identifier of the crane that was inspected shall always be available for review by Contracting Officer personnel.

m. Written reports listing the load test procedures used along with any repairs or alterations performed on the crane shall be available for review by Contracting Officer personnel.

n. Certify that all crane operators have been trained in proper use of all safety devices (e.g. anti-two block devices).

o. Take steps to ensure that wind speed does not contribute to loss of control of the load during lifting operations. Prior to conducting lifting operations the contractor shall set a maximum wind speed at which a crane can be safely operated based on the equipment being used, the load being lifted, experience of operators and riggers, and hazards on the work site. This maximum wind speed determination shall be included as part of the activity hazard analysis plan for that operation.

## 3.5 EXCAVATIONS

The competent person for excavations performed as a result of contract work shall be on-site when excavation work is being performed, and shall inspect, and document the excavations daily prior to entry by workers. The competent person must evaluate all hazards, including atmospheric, that may be associated with the work, and shall have the resources necessary to correct hazards promptly.

### 3.5.1 Utility Locations

Prior to any excavation, all underground utilities in the work area must be positively identified by the contractor utilizing a) a private utility locating service in addition to any station locating service, and/or b) a metal and/or cable-detecting device along the route of the excavation. All underground utilities discovered will be flagged a distance of one-half (1/2) meter on each side of the location, and any markings made during the utility investigation must be maintained throughout the contract.

Damage occurring to existing utilities, when the above procedures are not followed, will be repaired at the Contractor’s expense.

### 3.5.2 Utility Location Verification

The Contractor must physically verify underground utility locations by hand digging using wood or fiberglass handled tools when any adjacent construction work is expected to come within three feet of the underground system. Digging within 0.61 m (2 feet) of a known utility must not be performed by means of mechanical equipment; hand digging shall be used. If construction is parallel to an existing utility the utility shall be exposed by hand digging every 30.5 m (100 feet) if parallel within 1.5 m (5 feet) of the excavation.

### 3.5.3 Shoring Systems

Trench and shoring systems must be identified in the accepted safety plan and AHA. Manufacture tabulated data and specifications or registered engineer tabulated data for shoring or benching systems shall be readily available on-site for review. Job-made shoring or shielding shall have the registered professional engineer stamp, specifications, and tabulated data. Extreme care must be used when excavating near direct burial electric underground cables.

### 3.5.4 Trenching Machinery

Trenching machines with digging chain drives shall be operated only when the spotters/laborers are in plain view of the operator. Operator and spotters/laborers shall be provided training on the

hazards of the digging chain drives with emphasis on the distance that needs to be maintained when the digging chain is operating. Documentation of the training shall be kept on file at the project site.

## 3.6 UTILITIES WITHIN CONCRETE SLABS

Utilities located within concrete slabs or pier structures, bridges, and the like, are extremely difficult to identify due to the reinforcing steel used in the construction of these structures. Whenever contract work involves concrete chipping, saw cutting, or core drilling, the existing utility location must be coordinated with station utility departments in addition to a private locating service. Outages to isolate utility systems shall be used in circumstances where utilities are unable to be positively identified. The use of historical drawings does not alleviate the contractor from meeting this requirement.

## 3.7 ELECTRICAL

### 3.7.1 Conduct of Electrical Work

Underground electrical spaces must be certified safe for entry before entering to conduct work. Cables that will be cut must be positively identified and de-energized prior to performing each cut. Positive cable identification must be made prior to submitting any outage request for electrical systems. Arrangements are to be coordinated with the Contracting Officer and Station Utilities for identification. The Contracting Officer will not accept an outage request until the Contractor satisfactorily documents that the circuits have been clearly identified. Perform all high voltage cable cutting remotely using hydraulic cutting tool. When racking in or live switching of circuit breakers, no additional person other than the switch operator will be allowed in the space during the actual operation. Plan so that work near energized parts is minimized to the fullest extent possible. Use of electrical outages clear of any energized electrical sources is the preferred method. When working in energized substations, only qualified electrical workers shall be permitted to enter. When work requires Contractor to work near energized circuits as defined by the NFPA 70, high voltage personnel must use personal protective equipment that includes, as a minimum, electrical hard hat, safety shoes, insulating gloves with leather protective sleeves, fire retarding shirts, coveralls, face shields, and safety glasses. In addition, provide electrical arc flash protection for personnel as required by NFPA 70E. Insulating blankets, hearing protection, and switching suits may also be required, depending on the specific job and as delineated in the Contractor's AHA.

### 3.7.2 Portable Extension Cords

Portable extension cords shall be sized in accordance with manufacturer ratings for the tool to be powered and protected from damage. All damaged extension cords shall be immediately removed from service. Portable extension cords shall meet the requirements of NFPA 70 or European Union equivalent.

## 3.8 WORK IN CONFINED SPACES

The Contractor shall comply with the requirements in Section 06.I of USACE EM 385-1-1. Any potential for a hazard in the confined space requires a permit system to be used.

a. Entry Procedures. Prohibit entry into a confined space by personnel for any purpose, including hot work, until the qualified person has conducted appropriate tests to ensure the confined or enclosed space is safe for the work intended and that all potential hazards are controlled or eliminated and documented. (See Section 06.I.06 of USACE EM 385-1-1 for entry procedures). All hazards pertaining to the space shall be reviewed with each employee during review of the AHA.

b. Forced air ventilation is required for all confined space entry operations and the minimum air exchange requirements must be maintained to ensure exposure to any hazardous atmosphere is kept below its' action level.

c. Ensure the use of rescue and retrieval devices in confined spaces greater than 1.5 m (5 feet) in depth. Conform to Sections 06.I.08, 06.I.09 and 06.I.10 of USACE EM 385-1-1.

d. Sewer wet wells require continuous atmosphere monitoring with audible alarm for toxic gas detection.

e. Include training information for employees who will be involved as entrants and attendants for the work. Conform to Section 06.I.07 of USACE EM 385-1-1.

f. Daily Entry Permit. Post the permit in a conspicuous place close to the confined space entrance.

## 3.9 CRYSTALLINE SILICA

Grinding, abrasive blasting, and foundry operations of construction materials containing crystalline silica, shall comply with USACE EM 385-1-1, Appendix C. The Contractor shall develop and implement effective exposure control and elimination procedures to include dust control systems, engineering controls, and establishment of work area boundaries, as well as medical surveillance, training, air monitoring, and personal protective equipment.

## 3.10 DEMOLITION

3.101.1 Demolition Plan

The Contractor shall submit a written demolition plan for all demolition work to be carried on the site. In addition, the demolition plan shall be signed by a Professional Registered Engineer and meet the requirements of the Corps of Engineers Safety and Health Manual, EM 385-1-1, section 23. The demolition plan shall be submitted to the COR at least 1 week before the beginning of the work, including structural calculations for the demolition, if necessary. The demolition work shall not begin before the Contractor has received a written approval from the COR.

3.12.1 Protection of Personnel

During the demolition work the Contractor shall continuously evaluate the condition of the structure being demolished and take immediate action to protect all personnel working in and around the demolition site. No area, section, or component of floors, roofs, walls, columns, pilasters, or other structural element will be allowed to be left standing without sufficient bracing, shoring, or lateral support to prevent collapse or failure while workers remove debris or perform other work in the immediate area.

3.10.1 Protection of Structures

Floors, roofs, walls, columns, pilasters, and other structural components that are designed and constructed to stand without lateral support or shoring, and are determined to be in stable condition, shall remain standing without additional bracing, shoring, or lateral support until demolished, unless directed otherwise by the COR. The Contractor shall ensure that no elements determined to be unstable are left unsupported and shall be responsible for placing and securing bracing, shoring, or lateral supports as may be required as a result of any cutting, removal, or demolition work performed under this contract.

Interior concrete or masonry walls shall be demolished from the top down unless a Registered Engineer can demonstrate that an alternate method poses no additional safety hazards

## 3.11 HOUSEKEEPING

### 3.11.1 Clean-Up

The Contractor shall be responsible for cleaning up. The Contractor shall require his personnel to keep the immediate work site clean of all dirt and debris resulting from work under this contract. Accumulated dirt and debris shall be hauled off and disposed of in accordance with local law and at least once a week by the Contractor. Additionally, all debris in work areas shall be cleaned up daily or more frequently if necessary. Construction debris may be temporarily located in an approved location, however garbage accumulation must be removed each day.

Stairwells used by the Contractor during execution of work shall be cleaned daily. Cloths, mops, and brushes containing combustible materials shall be disposed of or stored outside of the buildings in tight covered metal containers. Paints and thinners shall not be poured into inlets of the interior or exterior sewage system. Paint, stains, and other residues on adjacent surfaces or fixtures caused by the Contractor shall be carefully removed and cleaned to original finish. Upon completion of the work, the Contractor shall remove all construction equipment, materials and debris resulting from the work. The entire work site and the area used by Contractor personnel shall be left clean.

**ATTACHMENT**

STR 01525O – SAFETY AND OCCUPATIONAL HEALTH PHASING PLAN

- End of Section -

A. PURPOSE AND RESPONSIBILITIES:

1. The purpose of this SOH Phasing Plan is to establish controls and procedures to reduce the safety and occupational health risks on associated projects to an acceptable level. This SOH Phasing Plan is not intended to address all program SOH requirements, but provides general emphasis to certain procedures and requirements addressed in: EM 385-1-1, U.S. Army Corps of Engineers Safety and Health Requirements Manual

2. For contractor safety on projects associated with this program, compliance with EM 385-1-1 safety requirements will be the long-term goal reached by growing a safety culture. This compliance will, by necessity, be achieved through a phased-in process. In the Commander's letter at the preface of the EM 385-1-1, he acknowledges that in OCONUS locations, strict compliance with the manual may not be possible – and through the hazard analysis process, safety measures can be developed to attain the same degree of safety.

a. The exact timeline and methods of compliance, based generally on the Phase plan below will be determined by in-theater Project Delivery Team (PDT) partners responsible for safety, to include USACE Field Engineering/Construction/ Safety personnel, Prime Contractors and Local Subcontractors. The Prime Contractor, in partnership with the USACE and subcontractors, will develop a Safety and occupational Health Plan (SOHP) consisting of a specific Accident Prevention Plan (APP) and Activity Hazard Analysis for each project.

b. Each project SOHP will evolve as a living document, starting by dividing into phases to provide a goal with a timeline. Focus for the project safety program areas will be based on the following time-based phases.

Phase I: "Saving Lives". Establish achievable compliance methods and basic worker safety education to eliminate or reduce to an acceptable level the life-threatening conditions associated with high hazard construction activities.

- The initial high-hazard focus areas shall include:
  - Excavations
  - Fall Hazards
  - Electrical Work
  - Mobile Construction Equipment
  - Machinery
  - Confined Spaces
- Develop a basic worker safety and health practices manual/ guide and associated mandatory training for each Focus area listed above. These will be in English and local language, based on local conditions and practices and targeted at high-hazard activities.
- On all contract sites, the basic life-support will include First Aid Kits, and emergency communication.
- Contractor Accident Prevention Plans, Activity Hazard Analyses, and other safety-related systems under development with assistance by PDT

Phase II: "Building A Safety Culture" (Approximately one year, beginning at end of Phase I) Advanced safety education of local contractors and LN work force. Full contractor compliance with
USACE safety standards related to high-hazard situations, increased application of standards on all work.

- Workforce education and training to include all applicable requirements of EM 385-1-1 and International Safety Standards
- All required Personal Protective Equipment (PPE) available and used by workers in applicable work practices, as outlined in the EM 385-1-1.

- Contractor Accident Prevention Plans, Activity Hazard Analyses, and other safety-related systems refined to meet standard USACE expectations with assistance by PDT
- Standard Contractor Safety administrative responsibilities required, i.e.: Accident reporting, man-hour tracking, training documentation, First Aid personnel certification, fire protection, etc.

Phase III, "Full Performance" (beginning at end of Phase II) Full performance in compliance with EM 385-1-1 and other applicable laws, regulations, design codes and standards.
Where standard compliance is not possible, local methods may be used in accordance with implementing letter of EM 385-1-1 or through formal waiver process.

3. The PDT shall employ the "Plan, Do, Check, Act" process for implementing this SOHP as a living document. Each PDT member is responsible for planning for safety and health management within their area of responsibility, implementing agreed-on mitigation, checking to assure that the SOHP is being implemented and acting to adjust plans and implementation with a goal of continuous improvement. This plan will be reviewed and revised as needed at the initiation of each Phase listed above.

4. The PDT members shall cooperate in developing a listing of potential hazards associated with each project.

B. GOALS AND OBJECTIVES:

1. Goals. The safety and health goals of all projects are:
   a. Be accident free
   b. Detect and address safety and health problems early in the life of each project
   c. Do not accept unnecessary risk
   d. Every team member, to include contractors shall contribute to the safety and health of their fellow team members and assure that the product is free of inherent hazards to the user.
   e. Educate the workforce and promote Safety as a new way of doing business, show how the project and the employee benefit from Safety.

2. Objectives. The safety and health objectives of this program are:
   a. Managers, supervisors, and workers shall be held accountable, based on the current Phase, for safety and health.
   b. Safety and health expectations shall be communicated with the work force in their native language through the use of banners, flyers, and periodic safety meetings
   c. The work force shall have the safety and health training needed to perform the work at hand, based on the Phase.
   d. Injury and property damage shall be avoided through early detection and management of hazards

Phase I Interim Safety and Occupational Health Work Practices for USACE Contractor Projects

Phase I Safety Program

1. Contractors shall strive to maintain full compliance with the USACE Safety Requirements Manual, EM 385-1-1. This may not be easily achieved during this Phase, due to a number of factors. The focus for safety and health efforts during this Phase is Saving Lives – the prevention of deaths, permanently disabling injuries, and major property loss. The goal during this period is to provide the equipment and methods needed to save lives and to train the workforce in working safely and using the correct personal Protective Equipment (PPE).

2. In order to assist in achieving this goal immediately, the following interim standards shall be used (as a minimum acceptable standard) when full compliance with the EM 385-1-1 is not possible. Contractors shall provide these standards in to their workforce in the local language and shall provide training as needed to ensure worker awareness.

Basic Safety and Health Standards for Construction

A. USACE and the contractors must form a team to assure safety on every job site and prevent serious accidents. All unsafe conditions must be reported and the hazard reduced before work may proceed.

B. Personal Protective Equipment (PPE) may not always be available to every worker during this Phase. Where the equipment required by the USACE Safety Manual, EM 385-1-1, cannot be provided in a timely manner, the contractor shall develop methods that will provide a similar degree of safety (as accepted by USACE) and not expose the workers to serious risk. The mandatory minimum standards for all PPE are:

- Footwear: Closed-toe durable shoes or boots shall be worn by all workers on the project site. No sandals or sports shoes will be allowed, at no time will workers be allowed on the project site with bare feet. Safety footwear (steel-toe or other protection) should be worn by workers using steel rollers, tampers, jack hammers or carrying heavy objects (metal, concrete, stone)
- Head Protection: When they are available, hard hats should be worn by all construction workers when they are at the project. Hard Hats must be worn in overhead hazard areas including material hoisting/ lifting operations, areas below scaffolds and other elevated work, in excavations, and low ceiling areas that have sharp or hazardous projections. If they are not available, then workers must be kept away from these and other overhead hazard areas.
- Respirators: Workers exposed to toxic chemicals, vapors, gases and dusts must wear proper respiratory protection. Such exposure is expected in asbestos removal/ repair work, working with paints and solvents in rooms or enclosed spaces, and fuel production facilities. The employer must train the workers in the uses of the respirator and how to properly wear it. The minimum acceptable respirator is a negative pressure filter or cartridge half-face respirator that is correctly equipped for the hazard. Contractors shall consult and follow the ACGIH guidance for length of allowable exposure to the contaminant and workers shall not exceed the recommended time for exposure. Dust Masks will be worn when the work is producing visible dust.
- Eye Protection: Workers shall wear protective glasses, goggles, or visors when exposed to eye hazards. These hazards include concrete dust, stone and concrete chips from hammering, sandblasting, and power tool cutting or milling. Workers performing welding and cutting with torches or arc-welding equipment shall wear the proper shaded lenses in face shields and/ or goggles.
- Hearing Protection: Protective ear plugs shall be worn when workers are exposed to potentially damaging noise including jack hammers, flight line operations, power saws and grinders, and combustion engines without mufflers.
- Gloves: All workers shall have protective gloves appropriate to the task.
- Clothing: Workers shall wear clothing that protects their skin from damage – shirts and long pants at a minimum. Workers exposed to welding operations, chemicals, abrasive blasting, wet concrete, asbestos, and other hazardous contaminants will wear appropriate clothing for the hazard. Workers using power tools or operating equipment shall not wear very loose or flowing clothing that may get caught in the equipment.

C. Work Methods for Highly Hazardous Work: The following types of work and hazards are recognized as the leading cause of serious injuries and deaths in construction work. Each type

of work has specific PPE and safety equipment that is required to do the work and also specific procedures that must be followed every time the work is done. These interim measures are the minimum acceptable precautions. For each project, an Activity Hazard Analysis (AHA) shall be completed and, when possible, compliance with more restrictive methods of the EM 385-1-1 shall be achieved.

Workers shall be trained on the following safety precautions, the nature of the hazards involved, and any additional work methods used before performing each type of work

- Excavations
  - The Site Safety and Health Officer will be contacted for inspection of the work prior to digging. The SSHO will assist in any safety equipment or techniques that are required to avoid injury. They will also provide a safety check on the location to assure the there are no underground hazards at the site.
  - All excavations or unsafe areas will be marked with barricades or warning tape. These warnings must be maintained and visible until the area is restored to a safe condition.
  - When workers will enter trenches, the walls shall be sloped according to the type of soil or shoring, trench boxes, or other structures will be used to protect workers from collapsing walls
  - Soil removed from trenches will not be placed at the edge of the trench – it must be placed back at least 1 meter from the edge.
  - Vehicles and construction equipment must not be parked closer than 2 meters from the edge of an excavation.
  - Excavation walls shall be inspected regularly during each day to check for cracks, bulges, large stones, sandy areas, and failure of the wall. If these conditions are found, nobody may enter the excavation and the damaged area must be dug out or braced.

- Fall Hazards
  - When working above 2 meters from the ground or another level, all workers shall be protected from falling. The SSHO will inspect prior to beginning work to be sure the work methods are safe. Inspection will include work on ladders, scaffolds, and other elevated work areas.
  - Protection systems shall be sturdy railings, walls, or other structures
  - If there are no structures to protect workers, body belts or harnesses shall be used along with lanyards.
  - Body belts should be mainly be used only to prevent a worker from falling over an edge or off a structure.
  - Body belts and harnesses can both be used as fall protection (stopping a falling worker). The lanyard shall be rope strong enough to withstand the shock of stopping the worker's weight, and they shall be as short as possible, to limit the shock force. Lanyards shall never allow a worker to fall more than 2 meters. It is recommended that lanyards without shock absorber devices be no longer than 1 meter.

- Electrical Work
  - All circuits, wires, and electrical devices shall be tested with a volt meter and found to be de-energized before workers touch the energized parts
  - Controls, switches, and other means for energizing the circuit or equipment shall be tagged "do not operate"
  - Workers shall not work closer to energized systems than the distances listed in the USACE manual.
  - Temporary electrical systems shall be grounded and tested for good ground resistance before use.

  - Power tools shall be protected from water and damage, and their cords must be insulated. Cords must be factory installed or equivalent replacements, including safety grip plug and cord boot.
  - Extension cords will be in safe, good working order.

- Mobile Construction Equipment
  - If equipment, particularly cranes, are damaged the repairs shall be done by a competent repair person and verified by the SSHO prior to being brought back into service.
  - Nobody may ride outside the cab of construction equipment. Specifically, no riders may ever be in loader buckets, bulldozer blades, on forklift forks, or suspended by a crane.
  - When workers are nearby, construction equipment must have reverse signal alarms or shall use a spotter standing away from the equipment. The spotter must be visible by the driver and positioned to see the area behind the equipment.
  - Construction equipment must work a safe distance from electrical systems, based on the voltage.
  - Cranes must be used according to the manufacturer. If no manufacturer data is available, a load chart shall be developed by a qualified engineer.
  - Workers should stay out of the radius of the crane boom during a lift.
  - Lifting ropes shall be inspected daily for breaks and failure of hardware and fittings.
  - Nobody shall ever ride the hook or load of a crane.

- Machinery
  - Rotating shafts, wheels, blades, and other hazardous parts shall have guards to prevent workers from being injured.
  - Fuel-powered machinery must not be operated indoors or near enclosed areas without using powered ventilation to prevent toxic CO build-up.
  - Metal housings of electrically powered equipment must be grounded

- Confined Spaces
  - The SSHO will pre-approve any work in a confined space, such as in a tank, sewer, manhole or any other enclosed area. The SSHO will inspect the work and assist with any safety equipment or techniques that are required.
  - All permit-required confined spaces (PRCS) on a project shall have signs prohibiting entry.
  - Entrants, supervisors, and attendants for PRCS shall be properly trained.
  - When available, oxygen/flammable/toxic gas meters shall be used for all PRCS. This equipment must be used to evaluate the air in all spaces known or suspected to have contained flammable or toxic chemicals or contain sewage, rotting vegetation or other organic matter.
  - For spaces not meeting the above criteria, mechanical ventilation fans shall be used to clear the air in the space when meters are not available. Based on the air flow of the fan, it shall exhaust the total volume of the space a minimum of seven times prior to entry.
  - All entrants shall wear a harness, body belt, or other device attached to a rope sufficient to retrieve the worker in an emergency.
  - Permits should be used during PRCS entry. If not possible, then some visible means, such as flags or tags outside the entrance, shall be used so supervisors can see when workers are in the space.

- Gas Cylinders
  - Pressurized gas cylinders, such as Oxygen and Acetylene tanks will be stored in a holding stand/ cart to prevent them from falling over. Cylinders will not be placed free on the ground or standing free. If the bottle is not in use the valve will be removed.

D. Child Labor. Minors under the age of 18 may not perform any of the above hazardous work. Additionally, these minors can not perform any hazardous work such as operating dangerous power tools (circular saws, jack hammers, lathes, etc), driving vehicles, be exterior assistants for vehicle operators or operating mobile construction equipment, explosives work, work at heights over 2 meters without standard railings, electrical work, entering excavations, and work with toxic substances.

## SPECIFICATION SECTION 01770

## CLOSEOUT PROCEDURES

### PART 1: GENERAL

### 1.1 SUBMITTALS

Government approval is required for submittals with a "G" designation; submittals not having a "G" designation are for information only. When used, a designation following the "G" designation identifies the office that will review the submittal for the Government. The following shall be submitted in accordance with Section 01335 SUBMITTAL PROCEDURES:

SD-10 Operation and Maintenance Data
Equipment/Product Warranty List; G
Submit Data Package 1 in accordance with Section 01781 OPERATION AND MAINTENANCE DATA.

SD-11 Closeout Submittals
As-Built Drawings; G
Record Of Materials; G
Equipment/Product Warranty Tag; G

### 1.2 PROJECT RECORD DOCUMENTS

1.2.1 As-Built Drawings

As built drawings shall be submitted in accordance with Section 01015 SPECIAL CONDITIONS

1.2.2 As-Built Record of Materials

Furnish a record of materials.

Where several manufacturers' brands, types, or classes of the item listed have been used in the project, designate specific areas where each item was used. Designations shall be keyed to the areas and spaces depicted on the contract drawing. Furnish the record of materials used in the following format:

| MATERIALS DESIGNATION | SPECIFICATION | MANUFACTURER | MATERIALS USED (MANUFACTURER'S DESIGNATION) | WHERE USED |
|---|---|---|---|---|
| | | | | |

### 1.3 EQUIPMENT/PRODUCT WARRANTIES

1.3.1 Equipment/Product Warranty List

The Contractor shall develop a warranty management plan which shall contain information relevant to the clause Warranty of Construction. At least 30 days before the planned pre-warranty conference, the Contractor shall submit the warranty management plan for Government approval. The warranty management plan shall include all required actions and documents to assure that the Government receives all warranties to which it is entitled. The plan shall be in narrative form and contain sufficient detail to render it suitable for use by future maintenance and repair personnel, whether tradesmen, or of engineering background, not necessarily familiar with this contract. The term "status" as indicated below shall include due date and whether item has been submitted or was accomplished. Warranty information made available during the construction phase shall be submitted to the Contracting Officer for approval prior to each monthly pay estimate. Approved information shall be assembled in a binder and shall be turned over to the Government upon acceptance of the work. The construction warranty period shall begin on the date of project acceptance and shall continue for the full product warranty period. A joint 4 month and 9 month warranty inspection shall be conducted, measured from time of acceptance, by the Contractor, Contracting Officer and the Customer Representative. Information contained in the warranty management plan shall include, but shall not be limited to, the following:

a. Roles and responsibilities of all personnel associated with the warranty process, including points of contact and telephone numbers within the organizations of the Contractors, subcontractors, manufacturers or suppliers involved.

b. Listing and status of delivery of all Certificates of Warranty for extended warranty items, to include roofs, HVAC balancing, pumps, motors, transformers, and for all commissioned systems such as fire protection and alarm systems, sprinkler systems, lightning protection systems, etc.

c. A list for each warranted equipment, item, feature of construction or system indicating:

1. Name of item.
2. Model and serial numbers.
3. Location where installed.
4. Name and phone numbers of manufacturers or suppliers.
5. Names, addresses and telephone numbers of sources of spare parts.
6. Warranties and terms of warranty. This shall include one-year overall warranty of construction. Items which have extended warranties shall be indicated with separate warranty expiration dates.
7. Cross-reference to warranty certificates as applicable.
8. Starting point and duration of warranty period.
9. Summary of maintenance procedures required to continue the warranty in force.
10. Cross-reference to specific pertinent Operation and Maintenance manuals.
11. Organization, names and phone numbers of persons to call for warranty service.
12. Typical response time and repair time expected for various warranted equipment.

d. The Contractor's plans for attendance at the 4 and 9 month post-construction warranty inspections conducted by the Government.

e. Procedure and status of tagging of all equipment covered by extended warranties.

f. Copies of instructions to be posted near selected pieces of equipment where operation is critical for warranty and/or safety reasons.

1.3.2 Performance of Warranty Work

In the event the Contractor fails to commence and diligently pursue any construction warranty work required, the Contracting Officer will have the work performed by others, and after completion of the

work, will charge the remaining construction warranty funds of expenses incurred by the Government while performing the work, including, but not limited to administrative expenses.

Following oral or written notification of required construction warranty repair work, the Contractor shall respond in a timely manner. Written verification will follow oral instructions. Failure of the Contractor to respond will be cause for the Contracting Officer to proceed against the Contractor.

1.3.3 Pre-Warranty Conference

Prior to contract completion, and at a time designated by the Contracting Officer, the Contractor shall meet with the Contracting Officer to develop a mutual understanding with respect to the requirements of this section. Communication procedures for Contractor notification of construction warranty defects, priorities with respect to the type of defect, reasonable time required for Contractor response, and other details deemed necessary by the Contracting Officer for the execution of the construction warranty shall be established/reviewed at this meeting. In connection with these requirements and at the time of the Contractor's quality control completion inspection, the Contractor shall furnish the name, telephone number and address of a licensed and bonded company which is authorized to initiate and pursue construction warranty work action on behalf of the Contractor. This point of contact will be located within the local service area of the warranted construction, shall be continuously available, and shall be responsive to Government inquiry on warranty work action and status. This requirement does not relieve the Contractor of any of its responsibilities in connection with other portions of this provision.

1.3.4 Warranty Tags

At the time of installation, each warranted item shall be tagged with a durable, oil and water resistant tag approved by the Contracting Officer. Each tag shall be attached with a copper wire and shall be sprayed with a silicone waterproof coating. The date of acceptance and the QC signature shall remain blank until project is accepted for beneficial occupancy. The tag shall show the following information.

a. Type of product/material _____
b. Model number _____
c. Serial number_____
d. Contract number _____
e. Warranty period _____ from _____ to _____
f. Inspector's signature _____
g. Construction Contractor_____
Address _____
Telephone number_____
h. Warranty contact _____
Address _____
Telephone number_____
i. Warranty response time priority code _____
j. WARNING - PROJECT PERSONNEL TO PERFORM ONLY OPERATIONAL MAINTENANCE DURING THE WARRANTY PERIOD.

## 1.4 MECHANICAL TESTING AND BALANCING

All contract requirements for testing/adjusting/balancing shall be fully completed, including all testing, prior to contract completion date. The time required to complete all testing/adjusting/balancing is included in the allotted calendar days for completion.

## 1.5 FINAL CLEANING

The premises shall be left broom clean. Stains, foreign substances, and temporary labels shall be removed from surfaces. Carpet and soft surfaces shall be vacuumed. Equipment and fixtures shall be cleaned to a sanitary condition. Filters of operating equipment shall be replaced. Debris shall be removed from roofs, drainage systems, gutters, and downspouts. Paved areas shall be swept and landscaped areas shall be raked clean. The site shall have waste, surplus materials, and rubbish removed. The project area shall have temporary structures, barricades, project signs, and construction facilities removed. A list of completed clean-up items shall be submitted on the day of final inspection.

## PART 2 PRODUCTS

Not used.

## PART 3 EXECUTION

Not used.

-- End of Section --

# SECTION 01780A

# CLOSEOUT SUBMITTALS

## PART 1 GENERAL

### 1.1 SUBMITTALS

Government approval is required for submittals with a "G" designation; submittals not having a "G" designation are for Contractor Quality Control approval. When used, a designation following the "G" designation identifies the office that will review the submittal for the Government. The following shall be submitted in accordance with Section 01335 SUBMITTAL PROCEDURES:

SD-02 Shop Drawings

As-Built Drawings

Drawings showing final as-built conditions of the project. The final CADD as-built drawings shall consist of one set of electronic CADD drawing files in the specified format, one set of mylar drawings, 2 sets of blue-line prints of the mylars, and one set of the approved working as-built drawings.

SD-03 Product Data

As-Built Record of Equipment and Materials

Two copies of the record listing the as-built materials and equipment incorporated into the construction of the project.

Warranty Management Plan

One set of the warranty management plan containing information relevant to the warranty of materials and equipment incorporated into the construction project, including the starting date of warranty of construction. The Contractor shall furnish with each warranty the name, address, and telephone number of each of the guarantor's representatives nearest to the project location.

Warranty Tags

Two record copies of the warranty tags showing the layout and design.

Final Cleaning

Two copies of the listing of completed final clean-up items.

### 1.2 PROJECT RECORD DOCUMENTS

1.2.1 As-Built Drawings

This paragraph covers as-built drawings complete, as a requirement of the contract. The terms "drawings," "contract drawings," "drawing files," "working as-built drawings" and "final as-built drawings" refer to contract drawings which are revised to be used for final as-built drawings.

1.2.1.1 Government Furnished Materials

One set of electronic CADD files in the specified software and format revised to reflect all bid amendments will be provided by the Government at the preconstruction conference for projects requiring CADD file as-built drawings.

1.2.1.2 Working As-Built and Final As-Built Drawings

The Contractor shall revise 2 sets of paper drawings by red-line process to show the as-built conditions during the prosecution of the project. These working as-built marked drawings shall be kept current on a weekly basis and at least one set shall be available on the jobsite at all times. Changes from the contract plans which are made in the work or additional information which might be uncovered in the course of construction shall be accurately and neatly recorded as they occur by means of details and notes. Final as-built drawings shall be prepared after the completion of each definable feature of work as listed in the Contractor Quality Control Plan (Foundations, Utilities, Structural Steel, etc., as appropriate for the project). The working as-built marked prints and final as-built drawings will be jointly reviewed for accuracy and completeness by the Contracting Officer and the Contractor prior to submission of each monthly pay estimate. If the Contractor fails to maintain the working and final as-built drawings as specified herein, the Contracting Officer will deduct from the monthly progress payment an amount representing the estimated cost of maintaining the as-built drawings. This monthly deduction will continue until an agreement can be reached between the Contracting Officer and the Contractor regarding the accuracy and completeness of updated drawings. The working and final as-built drawings shall show, but shall not be limited to, the following information:

a. The actual location, kinds and sizes of all sub-surface utility lines. In order that the location of these lines and appurtenances may be determined in the event the surface openings or indicators become covered over or obscured, the as-built drawings shall show, by offset dimensions to two permanently fixed surface features, the end of each run including each change in direction. Valves, splice boxes and similar appurtenances shall be located by dimensioning along the utility run from a reference point. The average depth below the surface of each run shall also be recorded.

b. The location and dimensions of any changes within the building structure.

c. Correct grade, elevations, cross section, or alignment of roads, earthwork, structures or utilities if any changes were made from contract plans.

d. Changes in details of design or additional information obtained from working drawings specified to be prepared and/or furnished by the Contractor; including but not limited to fabrication, erection, installation plans and placing details, pipe sizes, insulation material, dimensions of equipment foundations, etc.

e. The topography, invert elevations and grades of drainage installed or affected as part of the project construction.

f. Changes or modifications which result from the final inspection.

g. Where contract drawings or specifications present options, only the option selected for construction shall be shown on the final as-built prints.

h. If borrow material for this project is from sources on Government property, or if Government property is used as a spoil area, the Contractor shall furnish a contour map of the final borrow pit/spoil area elevations.

i. Systems designed or enhanced by the Contractor, such as HVAC

controls, fire alarm, fire sprinkler, and irrigation systems.

j. Modifications (change order price shall include the Contractor's cost to change working and final as-built drawings to reflect modifications) and compliance with the following procedures.

(1) Directions in the modification for posting descriptive changes shall be followed.

(2) A Modification Circle shall be placed at the location of each deletion.

(3) For new details or sections which are added to a drawing, a Modification Circle shall be placed by the detail or section title.

(4) For minor changes, a Modification Circle shall be placed by the area changed on the drawing (each location).

(5) For major changes to a drawing, a Modification Circle shall be placed by the title of the affected plan, section, or detail at each location.

(6) For changes to schedules or drawings, a Modification Circle shall be placed either by the schedule heading or by the change in the schedule.

(7) The Modification Circle size shall be 12.7 mm 1/2 inch diameter unless the area where the circle is to be placed is crowded. Smaller size circle shall be used for crowded areas.

1.2.1.3 Drawing Preparation

The as-built drawings shall be modified as may be necessary to correctly show the features of the project as it has been constructed by bringing the contract set into agreement with approved working as-built prints, and adding such additional drawings as may be necessary. These working as-built marked prints shall be neat, legible and accurate. These drawings are part of the permanent records of this project and shall be returned to the Contracting Officer after approval by the Government. Any drawings damaged or lost by the Contractor shall be satisfactorily replaced by the Contractor at no expense to the Government.

1.2.1.4 Computer Aided Design and Drafting (CADD) Drawings

Only personnel proficient in the preparation of CADD drawings shall be employed to modify the contract drawings or prepare additional new drawings. Additions and corrections to the contract drawings shall be equal in quality and detail to that of the originals. Line colors, line weights, lettering, layering conventions, and symbols shall be the same as the original line colors, line weights, lettering, layering conventions, and symbols. If additional drawings are required, they shall be prepared using the specified electronic file format applying the same graphic standards specified for original drawings. The title block and drawing border to be used for any new final as-built drawings shall be identical to that used on the contract drawings. Additions and corrections to the contract drawings shall be accomplished using CADD files. The Contractor will be furnished "as-designed" drawings in AutoCad Release 2000 or Microstation V8 format compatible with a Window 2000 or Windows XP operating system. The electronic files will be supplied on compact disc, read-only memory (CD-ROM). The Contractor shall be responsible for providing all program files and hardware necessary to prepare final as-built drawings. The Contracting Officer will review final as-built drawings for accuracy and the Contractor shall make required corrections, changes, additions, and deletions.

a. CADD colors shall be the "base" colors of red, green, and blue. Color code for changes shall be as follows:

(1) Deletions (red) - Deleted graphic items (lines) shall be colored red with red lettering in notes and leaders.

(2) Additions (Green) - Added items shall be drawn in green with green lettering in notes and leaders.

(3) Special (Blue) - Items requiring special information, coordination, or special detailing or detailing notes shall be in blue.

b. The Contract Drawing files shall be renamed in a manner related to the contract number (i.e., 98-C-10.DGN) as instructed in the Pre-Construction conference. Marked-up changes shall be made only to those renamed files. All changes shall be made on the layer/level as the original item. There shall be no deletions of existing lines; existing lines shall be over struck in red. Additions shall be in green with line weights the same as the drawing. Special notes shall be in blue on layer#63.

c. When final revisions have been completed, the cover sheet drawing shall show the wording "RECORD DRAWING AS-BUILT" followed by the name of the Contractor in letters at least 5 mm 3/16 inch high. All other contract drawings shall be marked either "AS-Built" drawing denoting no revisions on the sheet or "Revised As-Built" denoting one or more revisions. Original contract drawings shall be dated in the revision block.

d. Within 20days for contracts $5 million and above after Government approval of all of the working as-built drawings for a phase of work, the Contractor shall prepare the final CADD as-built drawings for that phase of work and submit two sets of blue-lined prints of these drawings for Government review and approval. The Government will promptly return one set of prints annotated with any necessary corrections. Within 10 days for contracts $5 million and above the Contractor shall revise the CADD files accordingly at no additional cost and submit one set of final prints for the completed phase of work to the Government. Within 20 days for contracts $5 million and above of substantial completion of all phases of work, the Contractor shall submit the final as-built drawing package for the entire project. The submittal shall consist of one set of electronic files on compact disc, read-only memory (CD-ROM), one set of mylars, two sets of blue-line prints and one set of the approved working as-built drawings. They shall be complete in all details and identical in form and function to the contract drawing files supplied by the Government. Any transactions or adjustments necessary to accomplish this is the responsibility of the Contractor. The Government reserves the right to reject any drawing files it deems incompatible with the customer's CADD system. Paper prints, drawing files and storage media submitted will become the property of the Government upon final approval. Failure to submit final as-built drawing files and marked prints as specified shall be cause for withholding any payment due the Contractor under this contract. Approval and acceptance of final as-built drawings shall be accomplished before final payment is made to the Contractor.

1.2.1.5 Payment

No separate payment will be made for as-built drawings required under this contract, and all costs accrued in connection with such drawings shall be considered a subsidiary obligation of the Contractor.

1.2.2 As-Built Record of Equipment and Materials

The Contractor shall furnish one copy of preliminary record of equipment and materials used on the project 15 days prior to final inspection. This preliminary submittal will be reviewed and returned 2 days after final inspection with Government comments. Two sets of final record of equipment and materials shall be submitted 10 days after final inspection. The designations shall be keyed to the related area depicted on the contract drawings. The record shall list the following data:

RECORD OF DESIGNATED EQUIPMENT AND MATERIALS DATA

| Description | Specification Section | Manufacturer and Catalog, | Composition and Size | Where Used |
|---|---|---|---|---|

Model, and
Serial Number

1.2.3 Final Approved Shop Drawings

The Contractor shall furnish final approved project shop drawings 30 days after transfer of the completed facility.

1.2.4 Construction Contract Specifications

The Contractor shall furnish final as-built construction contract specifications, including modifications thereto, 30 days after transfer of the completed facility.

1.2.5 Real Property Equipment

The Contractor shall furnish a list of installed equipment furnished under this contract. The list shall include all information usually listed on manufacturer's name plate. The "EQUIPMENT-IN-PLACE LIST" shall include, as applicable, the following for each piece of equipment installed: description of item, location (by room number), model number, serial number, capacity, name and address of manufacturer, name and address of equipment supplier, condition, spare parts list, manufacturer's catalog, and warranty. A draft list shall be furnished at time of transfer. The final list shall be furnished 30 days after transfer of the completed facility.

## 1.3 WARRANTY MANAGEMENT

1.3.1 Warranty Management Plan

The Contractor shall develop a warranty management plan which shall contain information relevant to the clause Warranty of Construction. At least 30 days before the planned pre-warranty conference, the Contractor shall submit the warranty management plan for Government approval. The warranty management plan shall include all required actions and documents to assure that the Government receives all warranties to which it is entitled. The plan shall be in narrative form and contain sufficient detail to render it suitable for use by future maintenance and repair personnel, whether tradesmen, or of engineering background, not necessarily familiar with this contract. The term "status" as indicated below shall include due date and whether item has been submitted or was accomplished. Warranty information made available during the construction phase shall be submitted to the Contracting Officer for approval prior to each monthly pay estimate. Approved information shall be assembled in a binder and shall be turned over to the Government upon acceptance of the work. The construction warranty period shall begin on the date of project acceptance and shall continue for the full product warranty period. A joint 4 month and 9 month warranty inspection shall be conducted, measured from time of acceptance, by the Contractor, Contracting Officer and the Customer Representative. Information contained in the warranty management plan shall include, but shall not be limited to, the following:

a. Roles and responsibilities of all personnel associated with the warranty process, including points of contact and telephone numbers within the organizations of the Contractors, subContractors, manufacturers or suppliers involved.

b. Listing and status of delivery of all Certificates of Warranty for extended warranty items, to include roofs, HVAC balancing, pumps, motors, transformers, and for all commissioned systems such as fire protection and alarm systems, sprinkler systems, lightning protection systems, etc.

c. A list for each warranted equipment, item, feature of construction or system indicating:

1. Name of item.
2. Model and serial numbers.
3. Location where installed.

4. Name and phone numbers of manufacturers or suppliers.
5. Names, addresses and telephone numbers of sources of spare parts.
6. Warranties and terms of warranty. This shall include one-year overall warranty of construction. Items which have extended warranties shall be indicated with separate warranty expiration dates.
7. Cross-reference to warranty certificates as applicable.
8. Starting point and duration of warranty period.
9. Summary of maintenance procedures required to continue the warranty in force.
10. Cross-reference to specific pertinent Operation and Maintenance manuals.
11. Organization, names and phone numbers of persons to call for warranty service.
12. Typical response time and repair time expected for various warranted equipment.

d. The Contractor's plans for attendance at the 4 and 9 month post-construction warranty inspections conducted by the Government.

e. Procedure and status of tagging of all equipment covered by extended warranties.

f. Copies of instructions to be posted near selected pieces of equipment where operation is critical for warranty and/or safety reasons.

1.3.2 Pre-Warranty Conference

Prior to contract completion, and at a time designated by the Contracting Officer, the Contractor shall meet with the Contracting Officer to develop a mutual understanding with respect to the requirements of this section. Communication procedures for Contractor notification of construction warranty defects, priorities with respect to the type of defect, reasonable time required for Contractor response, and other details deemed necessary by the Contracting Officer for the execution of the construction warranty shall be established/reviewed at this meeting. In connection with these requirements and at the time of the Contractor's quality control completion inspection, the Contractor shall furnish the name, telephone number and address of a licensed and bonded company which is authorized to initiate and pursue construction warranty work action on behalf of the Contractor. This point of contact will be located within the local service area of the warranted construction, shall be continuously available, and shall be responsive to Government inquiry on warranty work action and status. This requirement does not relieve the Contractor of any of its responsibilities in connection with other portions of this provision.

1.3.3 Contractor's Response to Construction Warranty Service Requirements

Following oral or written notification by the Contracting Officer, the Contractor shall respond to construction warranty service requirements in accordance with the "Construction Warranty Service Priority List" and the three categories of priorities listed below. The Contractor shall submit a report on any warranty item that has been repaired during the warranty period. The report shall include the cause of the problem, date reported, corrective action taken, and when the repair was completed. If the Contractor does not perform the construction warranty within the timeframes specified, the Government will perform the work and backcharge the construction warranty payment item established.

a. First Priority Code 1. Perform onsite inspection to evaluate situation, and determine course of action within 4 hours, initiate work within 6 hours and work continuously to completion or relief.

b. Second Priority Code 2. Perform onsite inspection to evaluate situation, and determine course of action within 8 hours, initiate work within 24 hours and work continuously to completion or relief.

c. Third Priority Code 3. All other work to be initiated within 3 work days and work

continuously to completion or relief.

d. The "Construction Warranty Service Priority List" is as follows:

Code 1-Air Conditioning Systems
1) Recreational support.
2) Air conditioning leak in part of building, if causing damage.
3) Air conditioning system not cooling properly.

Code 1-Doors
1) Overhead doors not operational, causing a security, fire, or safety problem.
2) Interior, exterior personnel doors or hardware, not functioning properly, causing a security, fire, or safety problem.

Code 3-Doors
1) Overhead doors not operational.
2) Interior/exterior personnel doors or hardware not functioning properly.

Code 1-Electrical
1) Power failure (entire area or any building operational after 1600 hours).
2) Security lights
3) Smoke detectors

Code 2-Electrical
1) Power failure (no power to a room or part of building).
2) Receptacle and lights (in a room or part of building).

Code 3-Electrical
Street lights.

Code 1-Gas
1) Leaks and breaks.
2) No gas to family housing unit or cantonment area.

Code 1-Heat
1) Area power failure affecting heat.
2) Heater in unit not working.

Code 2-Kitchen Equipment
1) Dishwasher not operating properly.
2) All other equipment hampering preparation of a meal.

Code 1-Plumbing
1) Hot water heater failure.
2) Leaking water supply pipes.

Code 2-Plumbing
1) Flush valves not operating properly.
2) Fixture drain, supply line to commode, or any water pipe leaking.
3) Commode leaking at base.

Code 3 –Plumbing
Leaky faucets.

Code 3-Interior
1) Floors damaged.

2) Paint chipping or peeling.
3) Casework.

Code 1-Roof Leaks
Temporary repairs will be made where major damage to property is occurring.

Code 2-Roof Leaks
Where major damage to property is not occurring, check for location of leak during rain and complete repairs on a Code 2 basis.

Code 2-Water (Exterior)
No water to facility.

Code 2-Water (Hot)
No hot water in portion of building listed.

Code 3-All other work not listed above.

1.3.5 Warranty Tags

At the time of installation, each warranted item shall be tagged with a durable, oil and water resistant tag approved by the Contracting Officer. Each tag shall be attached with a copper wire and shall be sprayed with a silicone waterproof coating. The date of acceptance and the QC signature shall remain blank until project is accepted for beneficial occupancy. The tag shall show the following information.

a. Type of product/material_____.

b. Model number_____.

c. Serial number_____.

d. Contract number_____.

e. Warranty period_____from_____to_____.

f. Inspector's signature_____.

g. Construction Contractor_____.
Address_____. Telephone number_____.

h. Warranty contact_____.
Address_____. Telephone number_____.

i. Warranty response time priority code_____.

j. WARNING - PROJECT PERSONNEL TO PERFORM ONLY OPERATIONAL MAINTENANCE DURING THE WARRANTY PERIOD.

**1.4 MECHANICAL TESTING, ADJUSTING, BALANCING, AND COMMISSIONING**

Prior to final inspection and transfer of the completed facility; all reports, statements, certificates, and completed checklists for testing, adjusting, balancing, and commissioning of mechanical systems shall be submitted to and approved by the Contracting Officer as specified inapplicable

technical specification sections.

## 1.5 OPERATION AND MAINTENANCE MANUALS

Operation manuals and maintenance manuals shall be submitted as specified. Operation manuals and maintenance manuals provided in a common volume shall be clearly differentiated and shall be separately indexed.

## 1.6 FINAL CLEANING

The premises shall be left broom clean. Stains, foreign substances, and temporary labels shall be removed from surfaces. Carpet and soft surfaces shall be vacuumed. Equipment and fixtures shall be cleaned to a sanitary condition. Filters of operating equipment shall be replaced. Debris shall be removed from roofs, drainage systems, gutters, and downspouts. Paved areas shall be swept and landscaped areas shall be raked clean. The site shall have waste, surplus materials, and rubbish removed. The project area shall have temporary structures, barricades, project signs, and construction facilities removed. A list of completed clean-up items shall be submitted on the day of final inspection.

## PART 2 PRODUCTS (NOT USED)

## PART 3 EXECUTION (NOT USED)

-- End of Section -

# SPECIFICATION SECTION 01781

# OPERATION AND MAINTENANCE DATA

## PART 1GENERAL

### 1.1 SUBMISSION OF OPERATION AND MAINTENANCE DATA

Submit Operation and Maintenance (O&M) Data specifically applicable to this contract and a complete and concise depiction of the provided equipment, product, or system. Organize and present information in sufficient detail to clearly explain O&M requirements at the system, equipment, component, and subassembly level. Include an index preceding each submittal. Submit in accordance with this section and Section 01335 SUBMITTAL PROCEDURES.

1.1.1 Package Quality

Documents must be fully legible. Poor quality copies and material with hole punches obliterating the text or drawings will not be accepted.

1.1.2 Package Content

Data package content shall be as shown in the paragraph titled "Schedule of Operation and Maintenance Data Packages." Comply with the data package requirements specified in the individual technical sections, including the content of the packages and addressing each product, component, and system designated for data package submission.

1.1.3 Changes to Submittals

Manufacturer-originated changes or revisions to submitted data shall be furnished by the Contractor if a component of an item is so affected subsequent to acceptance of the O&M Data. Changes, additions, or revisions required by the Contracting Officer for final acceptance of submitted data, shall be submitted by the Contractor within 30 calendar days of the notification of this change requirement.

### 1.2 TYPES OF INFORMATION REQUIRED IN O&M DATA PACKAGES

1.2.1 Operating Instructions

Include specific instructions, procedures, and illustrations for the following phases of operation:

1.2.1.1 Safety Precautions

List personnel hazards and equipment or product safety precautions for all operating conditions.

1.2.1.2 Operator Prestart

Include procedures required to set up and prepare each system for use.

1.2.1.3 Startup, Shutdown, and Post-Shutdown Procedures

Provide narrative description for Startup, Shutdown and Post-shutdown operating procedures including the control sequence for each procedure.

1.2.1.4 Normal Operations

Provide narrative description of Normal Operating Procedures. Include Control Diagrams with

data to explain operation and control of systems and specific equipment.

1.2.1.5 Emergency Operations

Include Emergency Procedures for equipment malfunctions to permit a short period of continued operation or to shut down the equipment to prevent further damage to systems and equipment. Include Emergency Shutdown Instructions for fire, explosion, spills, or other foreseeable contingencies. Provide guidance and procedures for emergency operation of all utility systems including required valve positions, valve locations and zones or portions of systems controlled.

1.2.1.6 Operator Service Requirements

Include instructions for services to be performed by the operator such as lubrication, adjustment, inspection, and recording gage readings.

1.2.1.7 Environmental Conditions

Include a list of Environmental Conditions (temperature, humidity, and other relevant data) that are best suited for the operation of each product, component or system. Describe conditions under which the item equipment should not be allowed to run.

1.2.2 Preventive Maintenance

Include the following information for preventive and scheduled maintenance to minimize corrective maintenance and repair.

1.2.2.1 Lubrication Data

Include preventative maintenance lubrication data, in addition to instructions for lubrication provided under paragraph titled "Operator Service Requirements":

a. A table showing recommended lubricants for specific temperature ranges and applications.
b. Charts with a schematic diagram of the equipment showing lubrication points, recommended types and grades of lubricants, and capacities.
c. A Lubrication Schedule showing service interval frequency.

1.2.2.2 Preventive Maintenance Plan and Schedule

Include manufacturer's schedule for routine preventive maintenance, inspections, tests and adjustments required to ensure proper and economical operation and to minimize corrective maintenance. Provide manufacturer's projection of preventive maintenance work-hours on a daily, weekly, monthly, and annual basis including craft requirements by type of craft. For periodic calibrations, provide manufacturer's specified frequency and procedures for each separate operation.

1.2.3 Corrective Maintenance (Repair)

Include manufacturer's recommended procedures and instructions for correcting problems and making repairs.

1.2.3.1 Troubleshooting Guides and Diagnostic Techniques

Include step-by-step procedures to promptly isolate the cause of typical malfunctions. Describe clearly why the checkout is performed and what conditions are to be sought. Identify tests or inspections and test equipment required to determine whether parts and equipment may be reused or require replacement.

1.2.3.2 Wiring Diagrams and Control Diagrams

Wiring diagrams and control diagrams shall be point-to-point drawings of wiring and control circuits including factory-field interfaces. Provide a complete and accurate depiction of the actual job specific wiring and control work. On diagrams, number electrical and electronic wiring and pneumatic control tubing and the terminals for each type, identically to actual installation configuration and numbering.

1.2.3.3 Maintenance and Repair Procedures

Include instructions and a list of tools required to repair or restore the product or equipment to proper condition or operating standards.

1.2.3.4 Removal and Replacement Instructions

Include step-by-step procedures and a list required tools and supplies for removal, replacement, disassembly, and assembly of components, assemblies, subassemblies, accessories, and attachments. Provide tolerances, dimensions, settings and adjustments required. Instructions shall include a combination of text and illustrations.

1.2.3.5 Spare Parts and Supply Lists

Include lists of spare parts and supplies required for maintenance and repair to ensure continued service or operation without unreasonable delays. Special consideration is required for facilities at remote locations. List spare parts and supplies that have a long lead-time to obtain.

1.2.4 Corrective Maintenance Work-Hours

Include manufacturer's projection of corrective maintenance work-hours including requirements by type of craft. Corrective maintenance that requires completion or participation of the equipment manufacturer shall be identified and tabulated separately.

1.2.5 Appendices

Provide information required below and information not specified in the preceding paragraphs but pertinent to the maintenance or operation of the product or equipment. Include the following:

1.2.6 Parts Identification

Provide identification and coverage for all parts of each component, assembly, subassembly, and accessory of the end items subject to replacement. Include special hardware requirements, such as requirement to use high-strength bolts and nuts. Identify parts by make, model, serial number, and source of supply to allow reordering without further identification. Provide clear and legible illustrations, drawings, and exploded views to enable easy identification of the items. When illustrations omit the part numbers and description, both the illustrations and separate listing shall show the index, reference, or key number that will cross-reference the illustrated part to the listed part. Parts shown in the listings shall be grouped by components, assemblies, and subassemblies in accordance with the manufacturer's standard practice. Parts data may cover more than one model or series of equipment, components, assemblies, subassemblies, attachments, or accessories, such as typically shown in a master parts catalog

1.2.6.1 Warranty Information

List and explain the various warranties and include the servicing and technical precautions prescribed by the manufacturers or contract documents in order to keep warranties in force.

Include warranty information for primary components such as the compressor of air conditioning system.

1.2.6.2 Personnel Training Requirements

Provide information available from the manufacturers that is needed for use in training designated personnel to properly operate and maintain the equipment and systems.

1.2.6.3 Testing Equipment and Special Tool Information

Include information on test equipment required to perform specified tests and on special tools needed for the operation, maintenance, and repair of components.

1.2.6.4 Contractor Information

Provide a list that includes the name, address, and telephone number of the General Contractor and each Subcontractor who installed the product or equipment, or system. For each item, also provide the name address and telephone number of the manufacturer's representative and service organization most convenient to the project site. Provide the name, address, and telephone number of the product, equipment, and system manufacturers.

## PART 2PRODUCTS

Not used.

## PART 3EXECUTION

### 3.1 TRAINING

Unless provided for elsewhere, the Contractor shall provide operational and maintenance training for all systems furnished under this contract in accordance with this section. The training shall not take place until the operation and maintenance manuals are submitted and approved.

Training will be given to personnel responsible for the operation and maintenance of the system at the installation. Orient training to the specific system being installed under this contract. Use operation and maintenance manual as the primary instructional aid in contractor provided activity personnel training. Manuals shall be delivered for each trainee with two additional sets delivered for archiving at the project site. Submit a training course schedule, syllabus, and training materials 14 days prior to the start of training. Obtain approval of the training course before beginning that phase of training. Furnish a qualified instructor approved by the system manufacturer to conduct training for the specific system.

Training manuals shall include an agenda, defined objectives and a detailed description of the subject matter for each lesson. Furnish audio-visual equipment and all other training materials and supplies. A training day is defined as 8 hours of classroom or lab instruction, including two 15 minute breaks and excluding lunch time, Monday through Friday, during the daytime shift in effect at the training facility. For guidance, the Contractor should assume the attendees will have a high school education.

The Contractor shall videotape the training session on VHS tapes and provide the tapes to the Government.

-- End of Section --

# APPENDIX A

# DRAWINGS

# Afghanistan National Police (ANP)

## District Headquarters Compounds

## 1 Story HQ

### Various Locations, Afghanistan

US Army Corps
of Engineers
Transatlantic Programs Center

15 November 2006

# DRAWING INDEX

| SHT.REF. NO. | FILE NO. | REVISIONS REV. NO. | REVISIONS AM/COP NO. | TITLE |
|---|---|---|---|---|
| | AF0607--GI01GN | | | DRAWING INDEX |
| | | | | |
| | | | | SITE DESIGN |
| | | | | |
| C-1 | AF0607--CI01PN | | | SITE PLAN |
| C-2 | AF0607--CI02DT | | | DETAILS |
| C-3 | AF0607--CI03DT | | | DETAILS |
| | | | | |
| XM-1 | AF0607--MS01PN | | | MECHANICAL SITE PLAN |
| XM-2 | AF0607--MS02DI | | | FUEL OIL SCHEMATIC |
| | | | | |
| XE-1 | AF0607--ES01PN | | | ELECTRICAL SITE PLAN |
| | | | | |
| | | | | |
| | | | | |
| | | | | |
| | | | | 1 STORY BUILDING (A) |
| | | | | |
| A-1 | AF0607A-AR01PN | | | FIRST FLOOR PLAN |
| A-2 | AF0607A-AR02PN | | | SECOND FLOOR PLAN |
| A-3 | AF0607A-AR03SE | | | BUILDING SECTIONS |
| A-4 | AF0607A-AR04SE | | | WALL SECTION |
| A-5 | AF0607A-AR05EL | | | BUILDING ELEVATIONS |
| A-6 | AF0607A-AR06EL | | | BUILDING ELEVATIONS |
| A-7 | AF0607A-AR07PN | | | ROOF PLAN |
| A-8 | AF0607A-AR08DT | | | WINDOW DETAILS |
| A-9 | AF0607A-AR09DT | | | DOOR DETAILS |
| A-10 | AF0607A-AR10DT | | | ROOF DETAILS |
| A-11 | AF0607A-AR11DT | | | DOOR DETAILS |
| A-12 | AF0607A-AR12DT | | | DOOR DETAILS |
| A-13 | AF0607A-AR13LS | | | ENLARGED TOILET PLANS |
| A-14 | AF0607A-AR14LS | | | ENLARGED KITCHEN PLAN |
| | | | | |
| | | | | |
| S-1 | AF0607A-SB01PN | | | FOUNDATION PLAN |
| S-2 | AF0607A-SB02PN | | | GRADE BEAM PLAN |
| S-3 | AF0607A-SB03PN | | | LOWER ROOF BEAM PLAN |
| S-4 | AF0607A-SB04PN | | | HIGH ROOF BEAM PLAN |
| S-5 | AF0607A-SB05PN | | | ROOF SLOPE AND ELEVATIONS |
| S-6 | AF0607A-SB06PN | | | FOOTING AND COLUMN DETAILS |
| S-7 | AF0607A-SB07DT | | | BEAM DETAILS |
| S-8 | AF0607A-SB08DT | | | STANDARD BEAM AND COLUMN DETAIL |
| | | | | |
| | | | | |
| M-1 | AF0607A-MH01PN | | | PROPANE SUPPLY SYSTEM PLAN |
| | | | | |
| P-1 | AF0607A-MP01PN | | | SANITATION SYSTEM PLAN |
| P-2 | AF0607A-MP02DI | | | SANITATION SYSTEM ISOMETRIC DIAGRAM |
| P-3 | AF0607A-MP03DI | | | SANITATION SYSTEM ISOMETRIC DIAGRAM |
| | | | | |
| W-1 | AF0607A-MW01PN | | | WATER SUPPLY SYSTEM PLAN |
| W-2 | AF0607A-MW02DI | | | WATER SUPPLY SYSTEM ISOMETRIC DIAGRAM |
| | | | | |
| | | | | |
| E-1 | AF0607A-EL01PN | | | LIGHTING PLAN |
| E-2 | AF0607A-EP02PN | | | POWER PLAN |
| E-3 | AF0607A-EC03PN | | | COMMUNICATION PLAN |
| E-4 | AF0607A-EL04SC | | | PANEL SCHEDULE |
| E-5 | AF0607A-EP05PN | | | LIGHTNING PROTECTION PLAN |

| SHT.REF. NO. | FILE NO. | REVISIONS REV. NO. | REVISIONS AM/COP NO. | TITLE |
|---|---|---|---|---|
| | | | | GUARD TOWERS (B) |
| | | | | |
| A-1 | AF0607B-AR01PN | | | FRAMING PLAN |
| A-2 | AF0607B-AR02EL | | | ELEVATIONS |
| A-3 | AF0607B-AR03EL | | | ELEVATIONS |
| | | | | |
| | | | | |
| | | | | |
| | | | | |
| | | | | GUARD SHACK (C) |
| | | | | |
| A-1 | AF0607C-AR01PN | | | STRUCTURAL PLAN AND ELEVATIONS |
| A-2 | AF0607C-AR02DT | | | ELEVATION AND DETAIL |
| | | | | |
| M-1 | AF0607C-MH01PN | | | HVAC PLAN |
| | | | | |
| E-1 | AF0607C-EL01PN | | | LIGHTING PLAN |
| | | | | |
| | | | | |
| | | | | |
| | | | | |
| | | | |

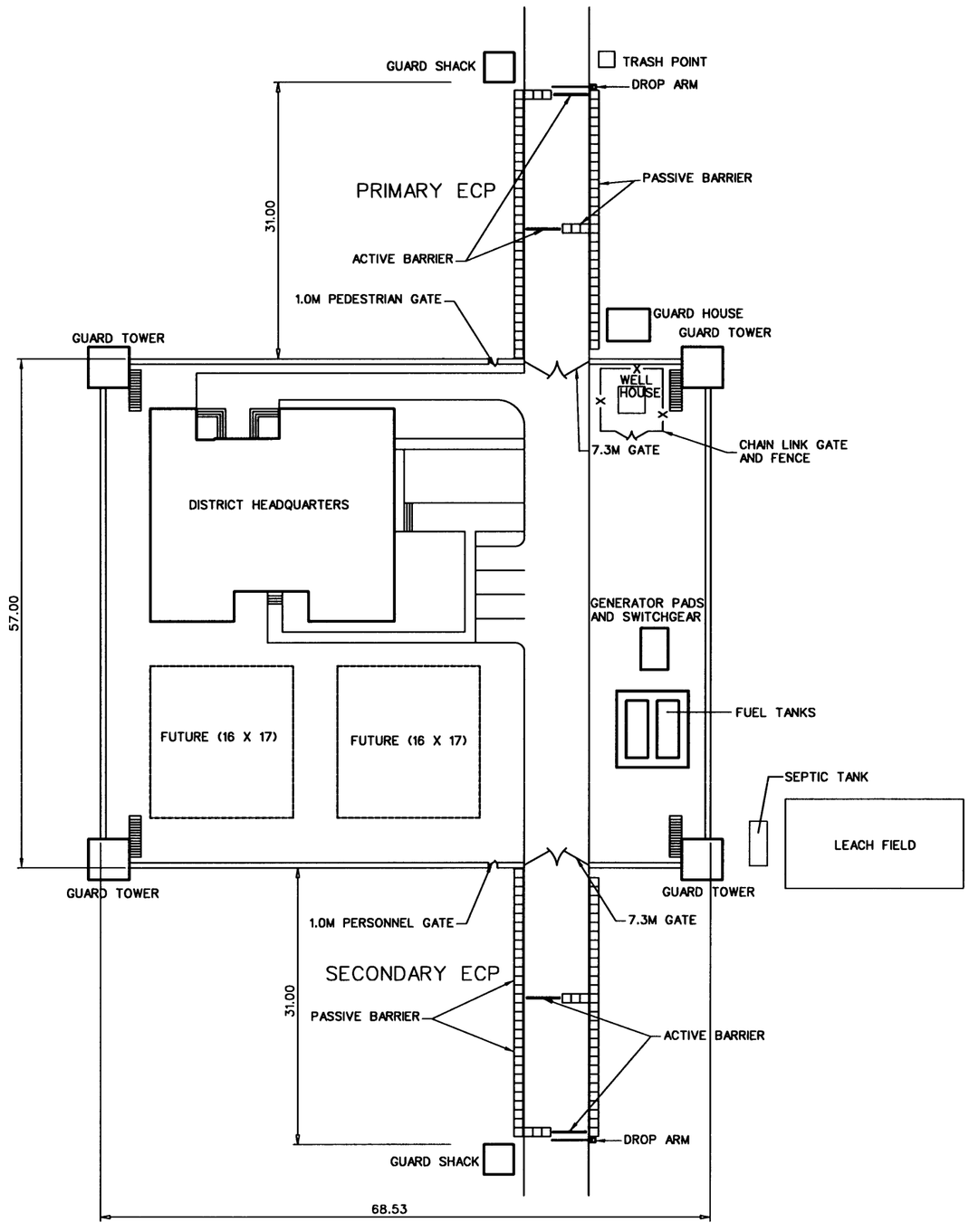


10 0 10 20
1:300

| SYMBOL | DESCRIPTION | DATE | APP |
|---|---|---|---|

DESIGNED BY: MW
DATE: 11-15-06
DWN BY: TSR
SUBMITTED BY: R. KORTYOHANN CHIEF, PDT SITE DEV
CHK BY: REK
FILE NO.: AF0607--CI01PN

US Army Corps of Engineers
Transatlantic Programs Center

AFGHANISTAN NATIONAL POLICE (ANP) DISTRICT HEADQUARTERS COMPOUNDS - 1 STORY HQ
AFGHANISTAN
SITE PLAN

SHEET REFERENCE NUMBER:
C-1

11/14/2006
h:\projects\Afghanistan\af0607\af0607\civ\af0607--ci01pn.dwg

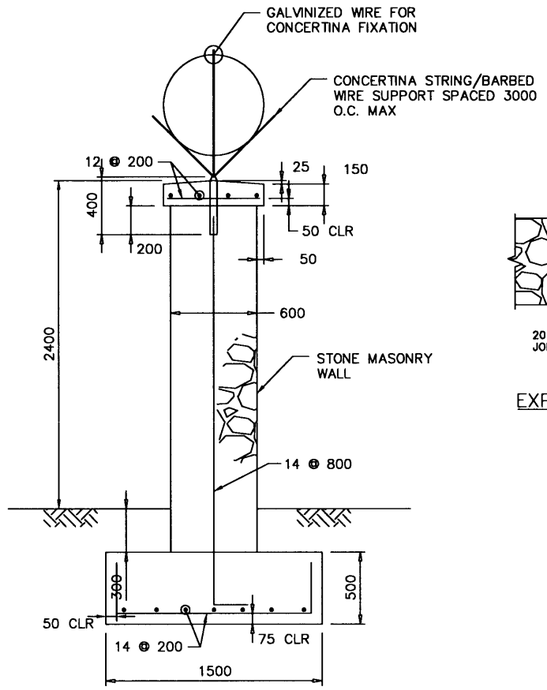


SECTION A
NOT TO SCALE

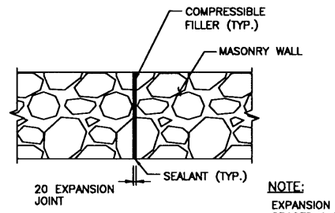


NOTE:
EXPANSION JOINTS SHALL BE SPACED A MAXIMUM OF 40,000.

STONE WALL
EXPANSION JOINT DETAIL
NOT TO SCALE

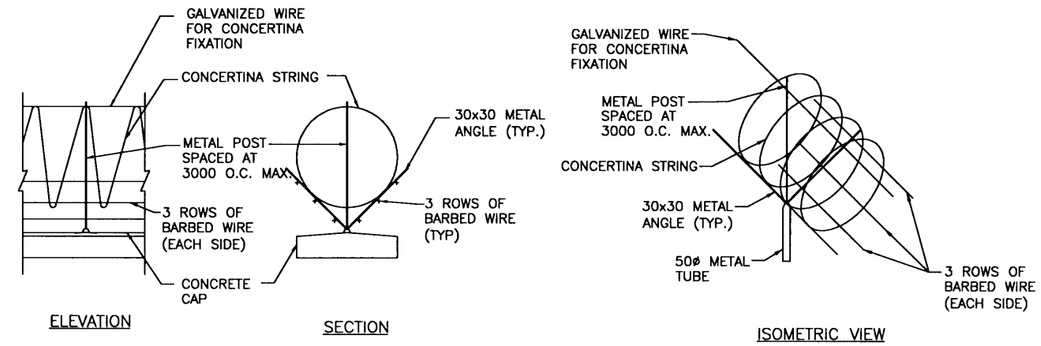


ELEVATION

SECTION

ISOMETRIC VIEW

CONCERTINA STRING & BARBED WIRE DETAILS
NOT TO SCALE

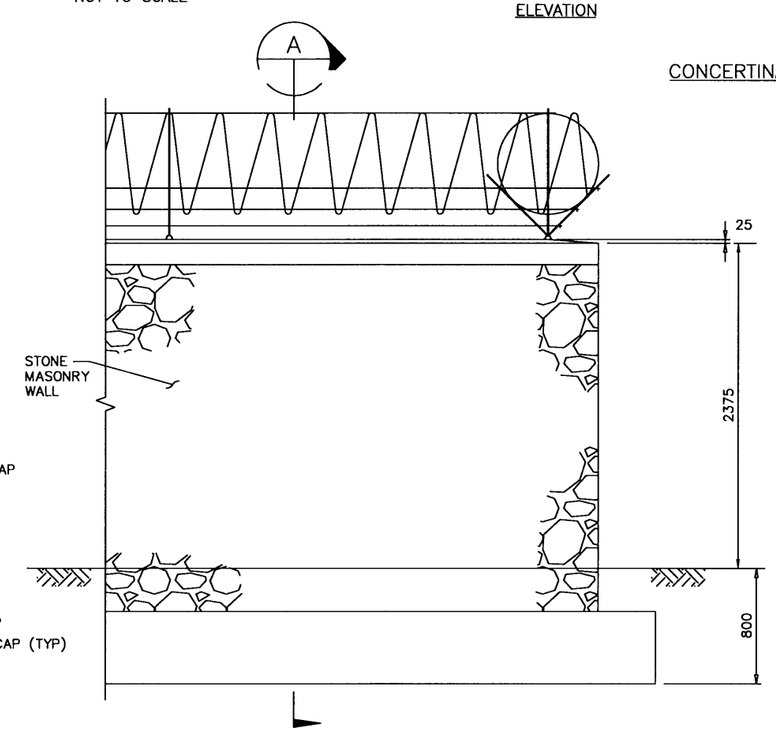


ELEVATION B
NOT TO SCALE

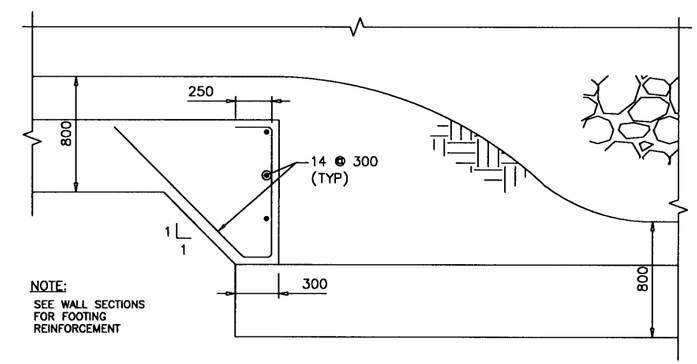


NOTE:
SEE WALL SECTIONS FOR FOOTING REINFORCEMENT

STEPPED FOOTING DETAIL FOR
GRADE CHANGE GREATER THAN 15 DEGREES
NOT TO SCALE

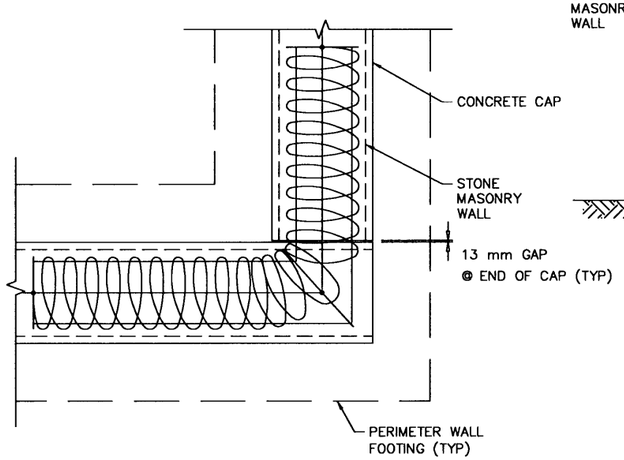


PERIMETER – STONE WALL CORNER – PLAN
(END CONDITION SIMILAR)
NOT TO SCALE

UNLESS OTHERWISE NOTED, LINEAR DIMENSIONS SHOWN ARE IN MILLIMETERS.

| SYMBOL | DESCRIPTION | DATE | APP'D |
|---|---|---|---|

DESIGNED BY: MW
DATE: 11-15-06
DWN BY: TSR
SUBMITTED BY: R. KORTYOHANN, CHIEF, PDT SITE DEV
CHK BY: REK
FILE NO.: AF0607--CI02DT

US Army Corps of Engineers
Transatlantic Programs Center

AFGHANISTAN NATIONAL POLICE (ANP) DISTRICT HEADQUARTERS COMPOUNDS - 1 STORY HQ
AFGHANISTAN

DETAILS

SHEET REFERENCE NUMBER:
C-2

11/14/2006
h:\projects\afghanistan\af0607\af0607\civ\af0607--ci02dt.dwg

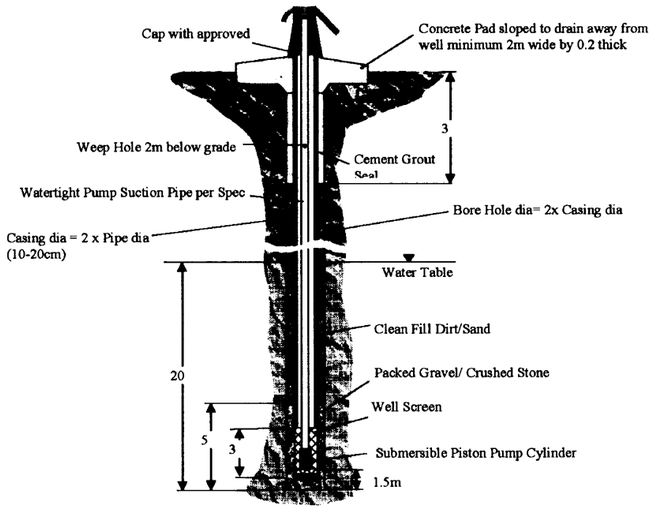


Sample Well Installation Drawing

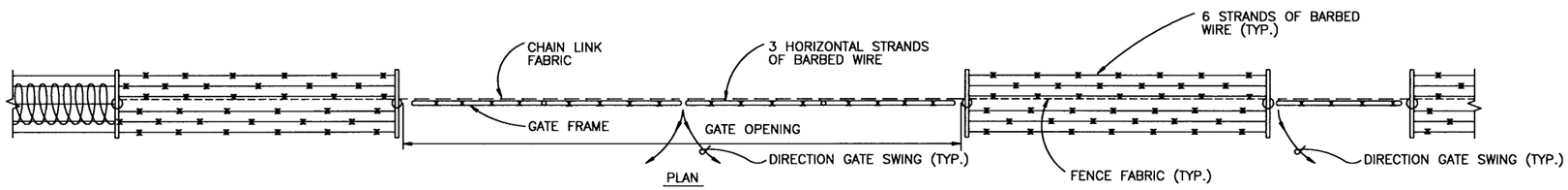


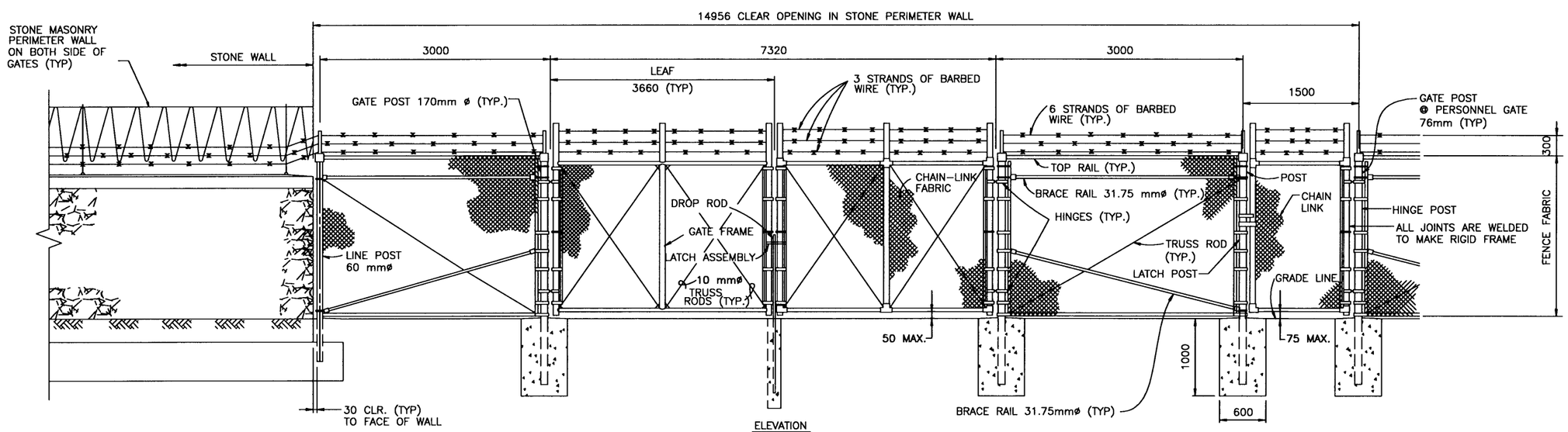


DOUBLE SWING GATE
NTS

PERSONNEL GATE
NTS

UNLESS OTHERWISE NOTED, LINEAR DIMENSIONS SHOWN ARE IN MILLIMETERS.

| SYMBOL | DESCRIPTION | DATE | APR |
|---|---|---|---|

DESIGNED BY: MW | DATE: 11-15-06
DWN BY: TSR | SUBMITTED BY: R. KORTYOHANN, CHIEF, PDT SITE DEV
CHK BY: REK | FILE NO.: AF0607--CI03DT

US Army Corps of Engineers Transatlantic Programs Center

AFGHANISTAN NATIONAL POLICE (ANP) DISTRICT HEADQUARTERS COMPOUNDS - 1 STORY HQ
AFGHANISTAN
DETAILS

SHEET REFERENCE NUMBER: C-3

11/14/2006
h:\projects\afghanistan\af0607\af0607\civ\af0607--ci03dt.dwg

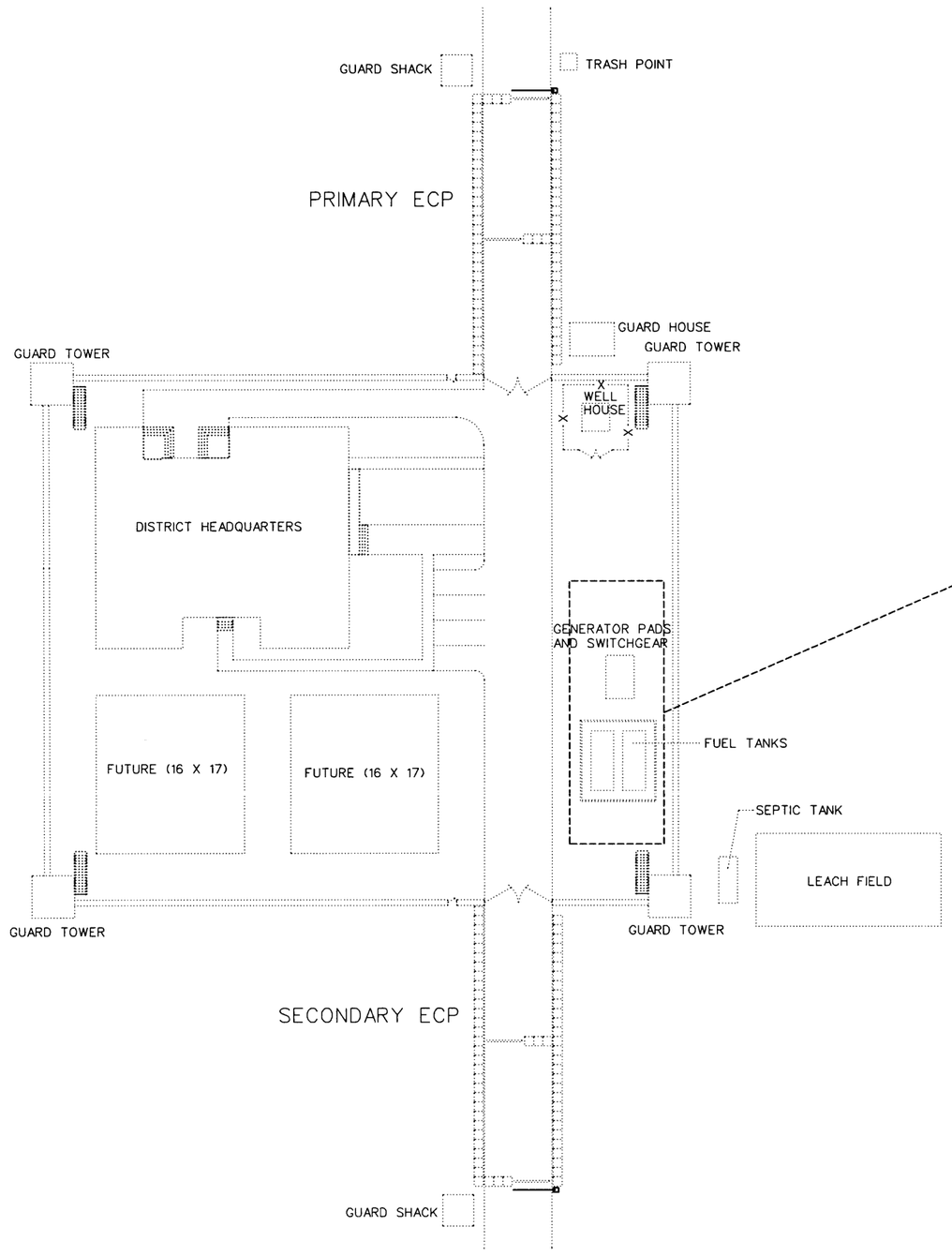


## MECHANICAL SITE PLAN
SCALE 1: 300

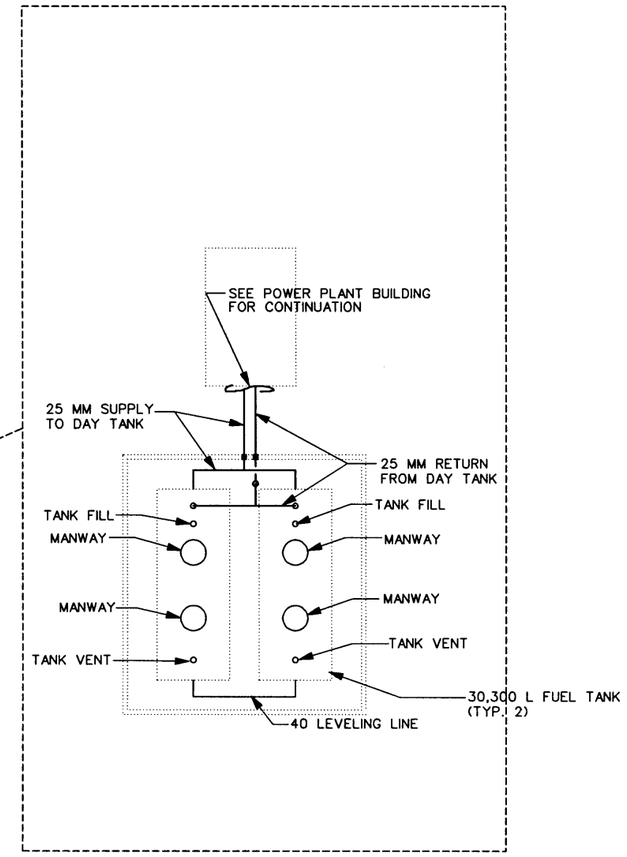


## ENLARGED MECHANICAL SITE PLAN
SCALE 1: 100

10 0 10 20
1:300

| SYMBOL | DESCRIPTION | DATE | APR |
|---|---|---|---|

DESIGNED BY: TWS
DATE: 11-15-06
DWN BY: TWS
SUBMITTED BY: MICHAEL HOWELL CHIEF, PDT BLDG SYSTEMS
CHK BY: MFH
FILE NO.: AF0607--MS01PN

US Army Corps of Engineers
Transatlantic Programs Center

AFGHANISTAN NATIONAL POLICE (ANP) DISTRICT HEADQUARTERS COMPOUNDS - 1 STORY HQ
AFGHANISTAN
SITE DESIGN
MECHANICAL SITE PLAN

SHEET REFERENCE NUMBER:
XM-1

11/14/2006
h:\projects\afghanistan\af0607\af0607\mec\AF0607--MS01PN.DWG

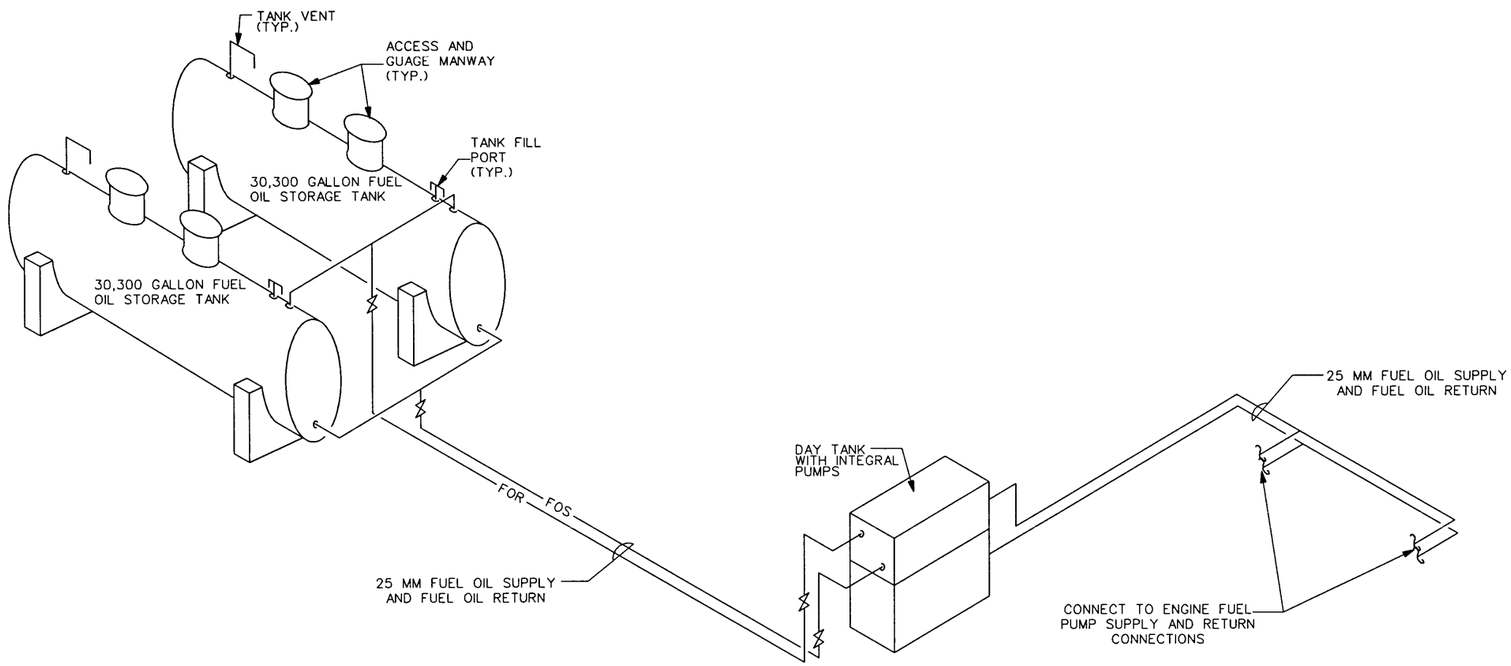


FUEL OIL SCHEMATIC
N.T.S.

| SYMBOL | DESCRIPTION | DATE | APR |
|---|---|---|---|

DESIGNED BY: TWS
DATE: 11-15-06
DWN BY: TWS
SUBMITTED BY: MICHAEL HOWELL CHIEF, PDT BLDG SYSTEMS
CHK BY: MFH
FILE NO.: AF0607--MS02DI

US Army Corps of Engineers
Transatlantic Programs Center

AFGHANISTAN NATIONAL POLICE (ANP) DISTRICT HEADQUARTERS COMPOUNDS - 1 STORY HQ
AFGHANISTAN
SITE DESIGN
FUEL OIL SCHEMATIC

SHEET REFERENCE NUMBER:
XM-2

11/14/2006
h:\projects\afghanistan\af0607\af0607\mec\AF0607--MS02DI.DWG

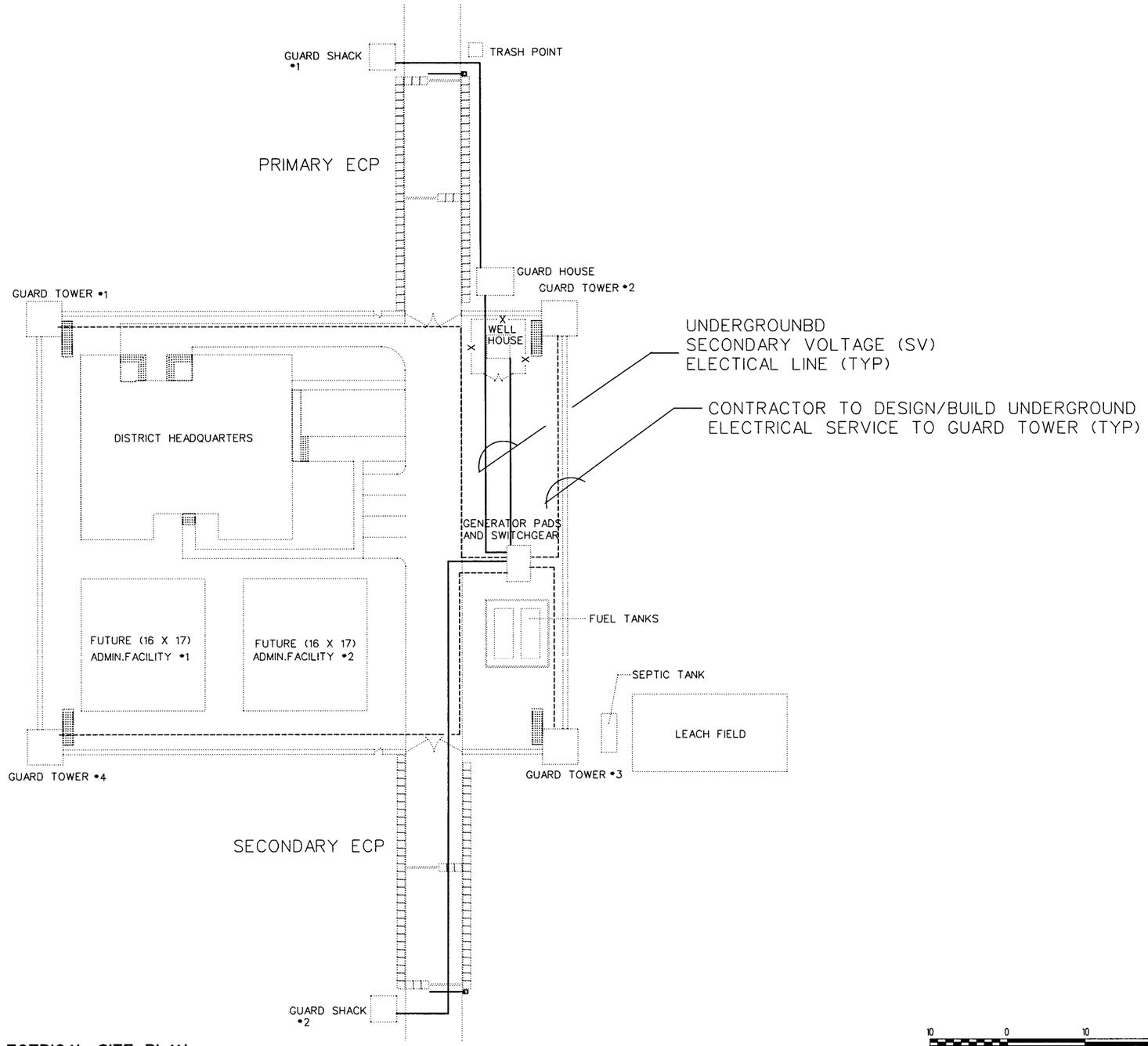


## ELECTRICAL SITE PLAN

SCALE 1: 300

| SYMBOL | DESCRIPTION | DATE | APR |
|---|---|---|---|

DESIGNED BY: MM
DATE: 11-15-06
DWN BY: MM
SUBMITTED BY: MICHAEL HOWELL CHIEF, PDT BLDG SYSTEMS
CHK BY: MFH
FILE NO.: AF0607--ESOIPN

US Army Corps of Engineers
Transatlantic Programs Center

AFGHANISTAN NATIONAL POLICE (ANP) DISTRICT HEADQUARTERS COMPOUNDS - 1 STORY HQ
AFGHANISTAN
SITE DESIGN
ELECTRICAL SITE PLAN

SHEET REFERENCE NUMBER:
XE-1

11/14/2006
h:\projects\afghanistan\af0607\af0607\ele\AF0607--ESOIPN.dwg

NOTES:
1. DIMENSIONS ARE IN CENTIMENTERS, UNLESS OTHERWISE NOTED.

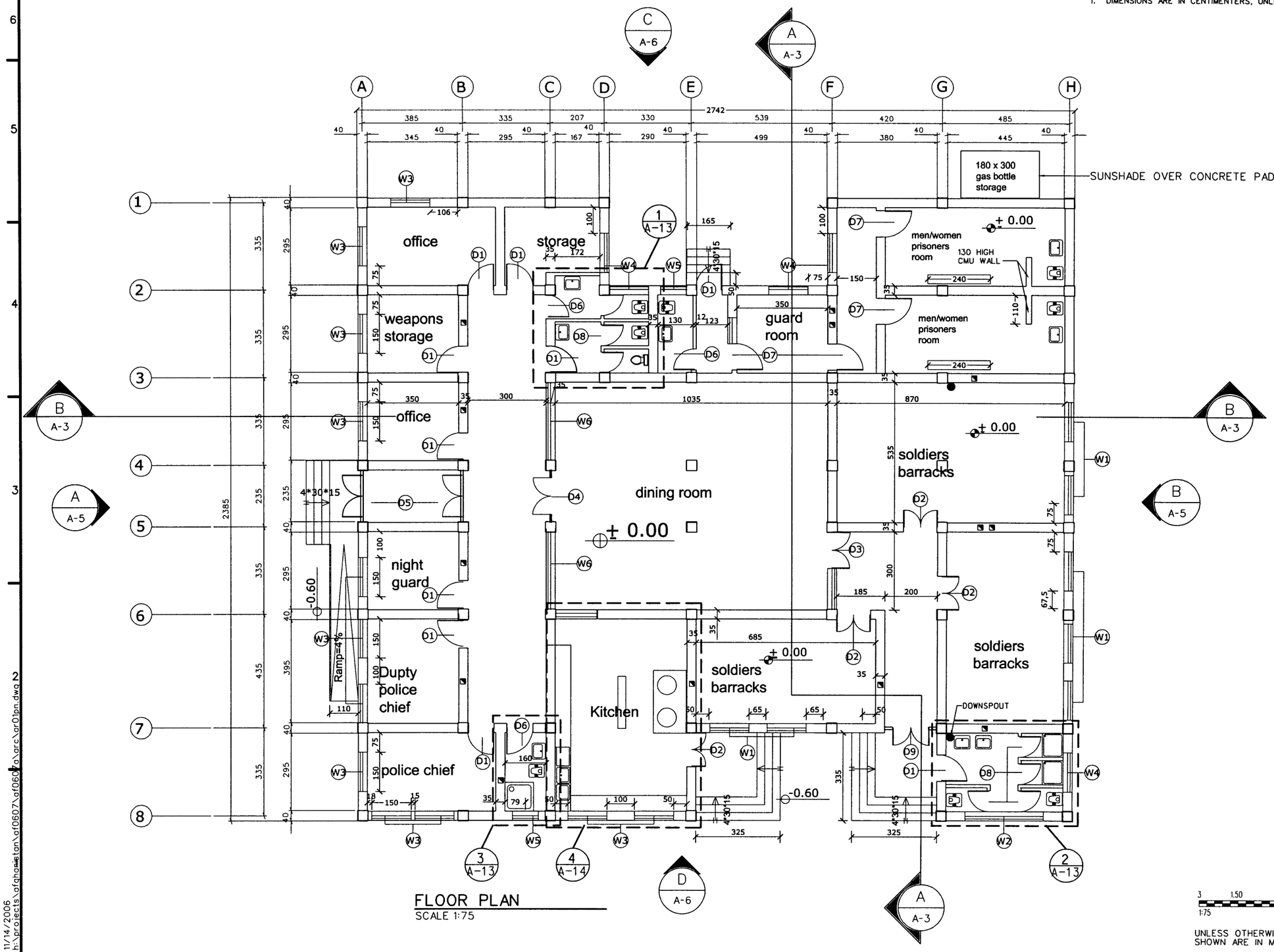


FLOOR PLAN
SCALE 1:75

UNLESS OTHERWISE NOTED, LINEAR DIMENSIONS SHOWN ARE IN MILLIMETERS.

| | | | |
|---|---|---|---|
| DESIGNED BY: GA | DATE: 11-15-06 | | |
| DWN BY: ABB | SUBMITTED BY: PHILIP J. PINELLO CHIEF, PDT FACILITIES DES. | | |
| CHK BY: ABB | FILE NO.: AF0607 A-R01PN | | |

US Army Corps of Engineers
Transatlantic Programs Center

AFGHANISTAN NATIONAL POLICE (ANP) DISTRICT HEADQUARTERS COMPOUNDS - 1 STORY HQ
AFGHANISTAN
1 STORY BUILDING
FIRST FLOOR PLAN

SHEET REFERENCE NUMBER:
A
A-1

11/14/2006
h:\projects\afghanistan\af0607\af0607a\arc\ar01pn.dwg

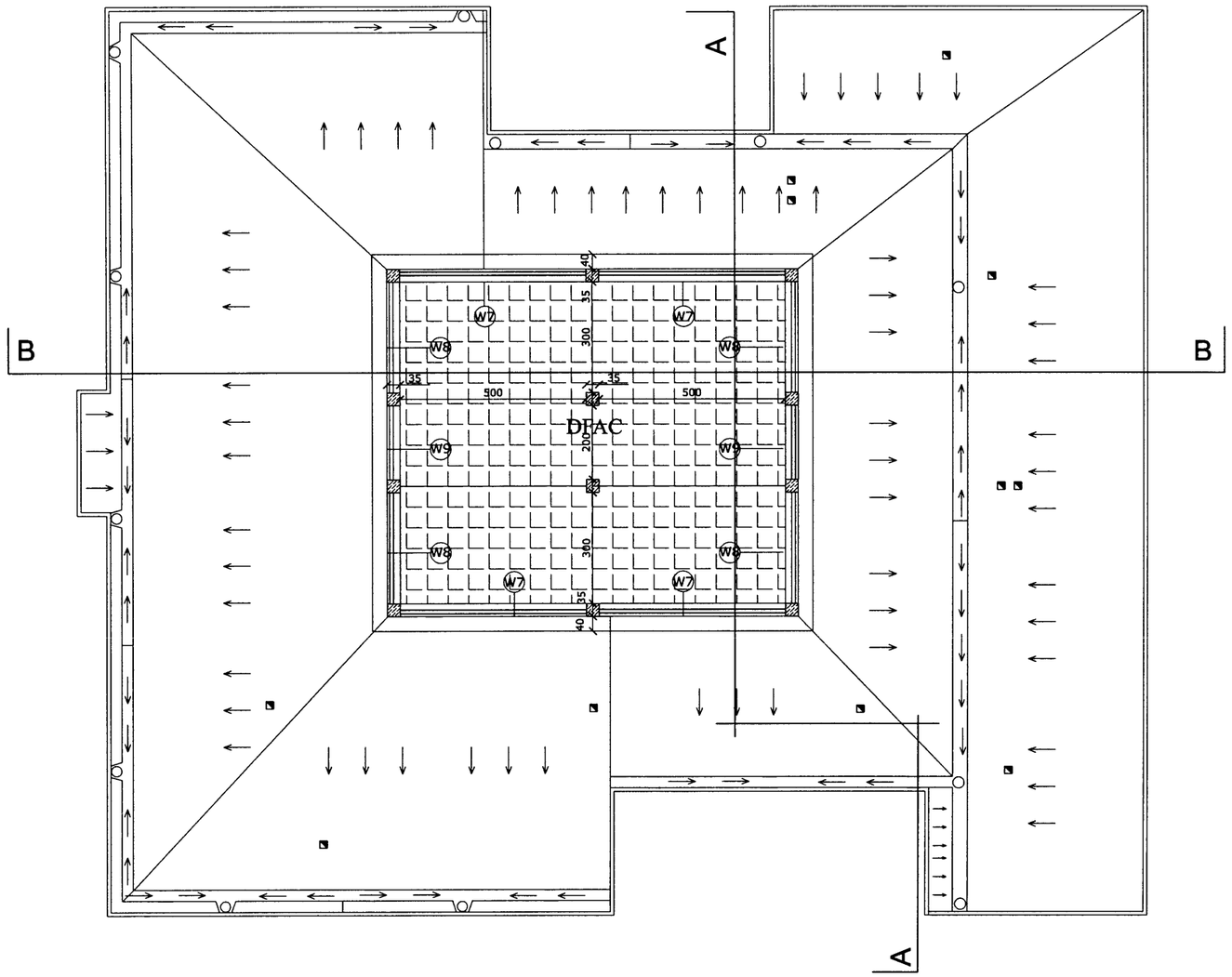


FLOOR PLAN
SCALE- 1:75

3 1.50 0 3 4.5
1:75

UNLESS OTHERWISE NOTED, LINEAR DIMENSIONS SHOWN ARE IN MILLIMETERS.

| SYMBOL | DESCRIPTION | DATE | APR |
|---|---|---|---|

DESIGNED BY: GA
DATE: 11-15-06
DWN BY: VLC
SUBMITTED BY: PHILIP J. PINELLO, CHIEF, PDT FACILITIES DES.
CHK BY: ABB
FILE NO.: AF0607A-AR02PN

US Army Corps of Engineers
Transatlantic Programs Center

AFGHANISTAN NATIONAL POLICE (ANP) DISTRICT HEADQUARTERS COMPOUNDS - 1 STORY HQ
AFGHANISTAN
1 STORY BUILDING
SECOND FLOOR PLAN

SHEET REFERENCE NUMBER:
A
A-2

SHEET SIZE

11/14/2006
h:\projects\afghanistan\af0607\af0607a\arc\ar02pn.dwg
auto_short_design
auto_scale
auto_sysfms

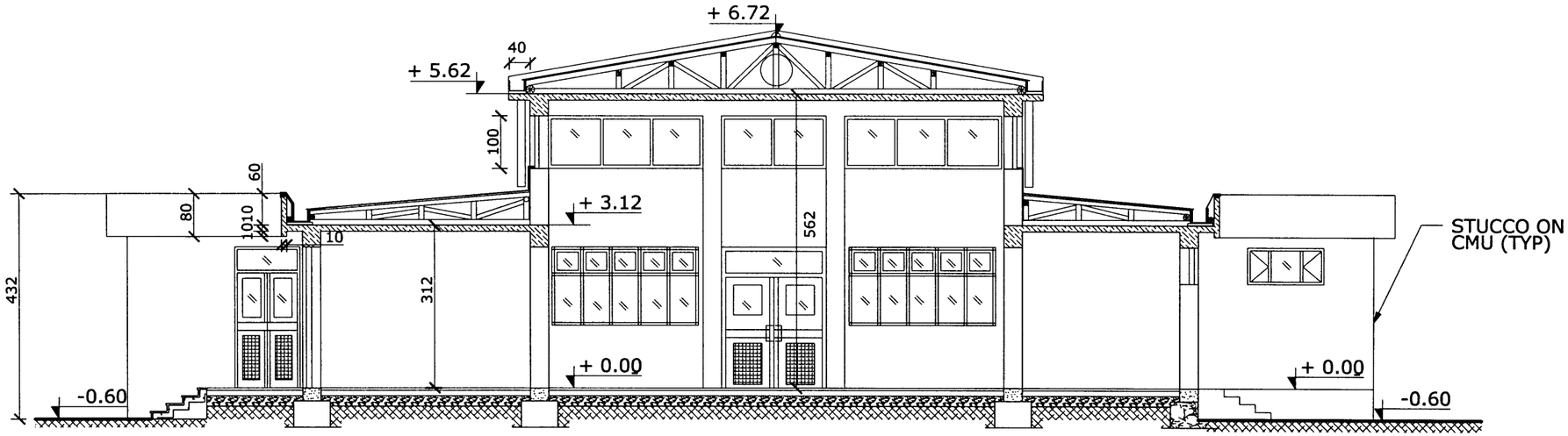


BUILDING SECTION (A–A)
SCALE = 1:50
A-1 A-2 A-3

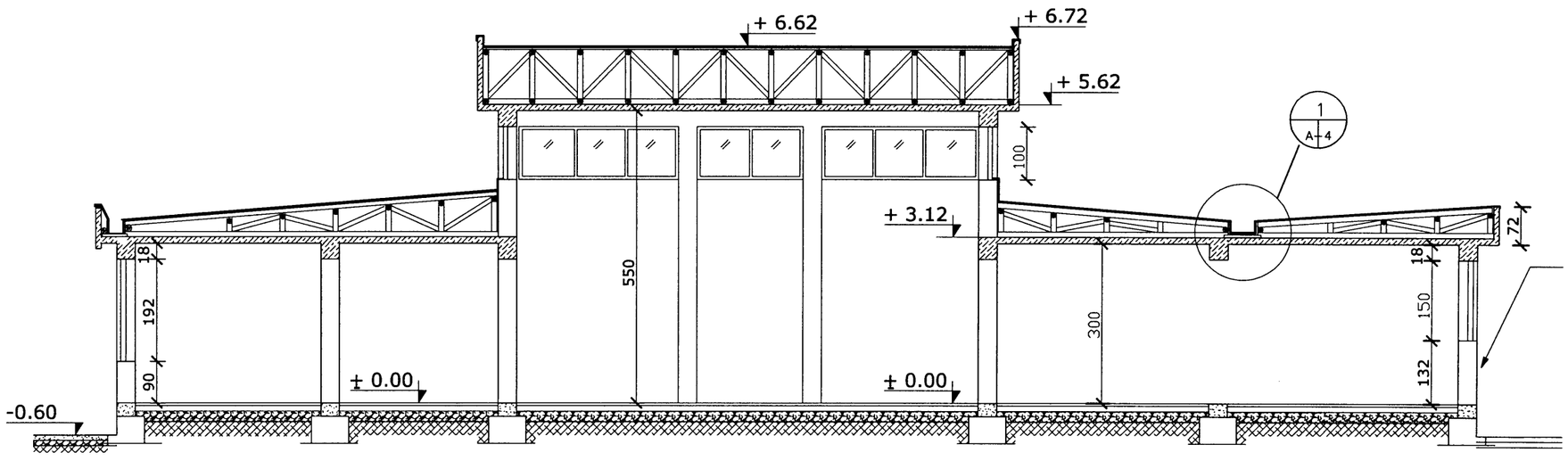


BUILDING SECTION (B–B)
SCALE = 1:50
A-1 A-2 A-3

1 0 1 2 3 4
1:50

UNLESS OTHERWISE NOTED, LINEAR DIMENSIONS SHOWN ARE IN MILLIMETERS.

| SYMBOL | DESCRIPTION | DATE | APP |
|---|---|---|---|

DESIGNED BY: GA
DATE: 11-15-06
DWN BY: VLC
SUBMITTED BY: PHILIP J. PINELLO, CHIEF, PDT FACILITIES DESIGN
CHK BY: ABB
FILE NO.: AF0607 A-AR03SE

US Army Corps of Engineers
Transatlantic Programs Center

AFGHANISTAN NATIONAL POLICE (ANP) DISTRICT HEADQUARTERS COMPOUNDS - 1 STORY HQ
AFGHANISTAN
1 STORY BUILDING
BUILDING SECTIONS

SHEET REFERENCE NUMBER:
A
A-3

11/14/2006
h:\projects\afghanistan\af0607\af0607a\arc\ar03se.dwg

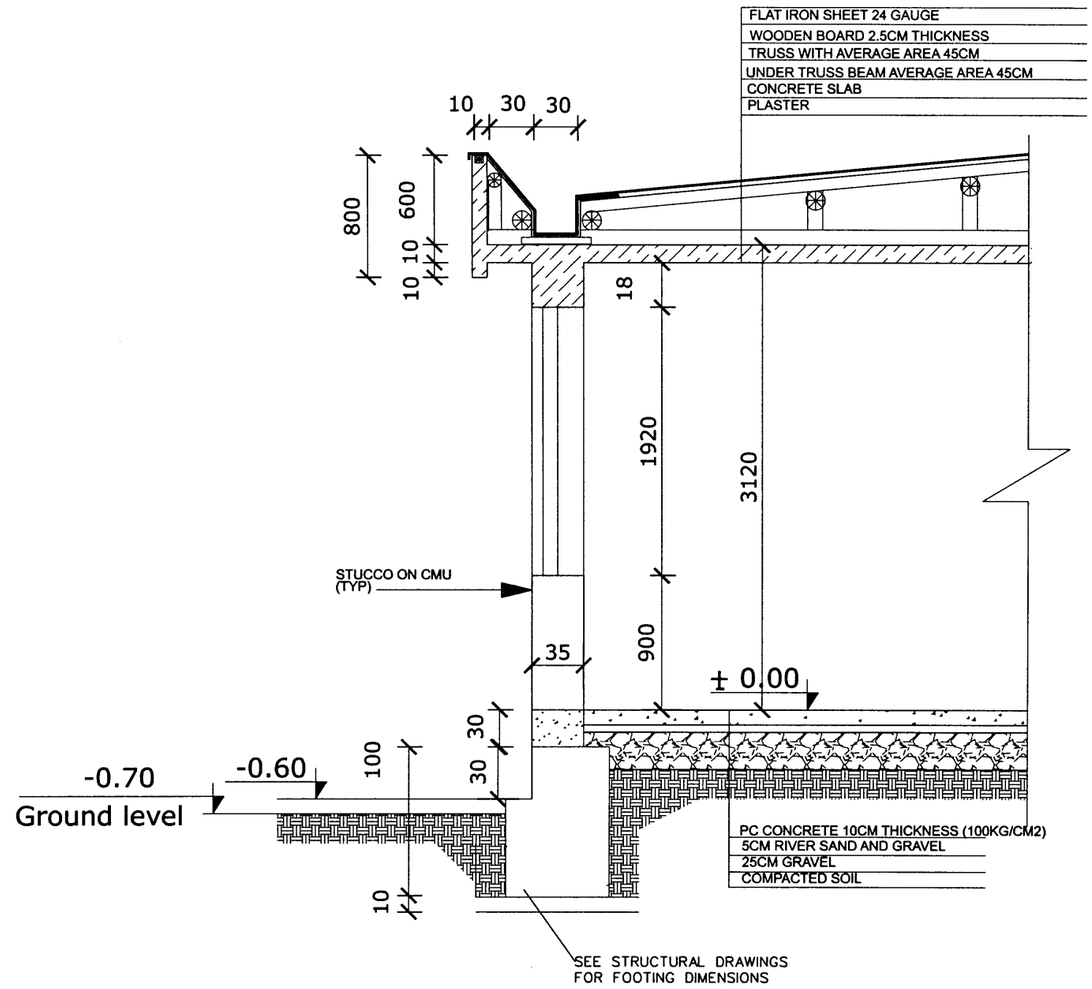


DETAIL 1 A-3 A-4
SCALE-1:20

1 .50 0 1
1:20

UNLESS OTHERWISE NOTED, LINEAR DIMENSIONS SHOWN ARE IN MILLIMETERS.

| SYMBOL | DESCRIPTION | DATE | APR |
|---|---|---|---|

DESIGNED BY: GA
DATE: 11-15-06
DWN BY: VLC
SUBMITTED BY: PHILIP J. PANELLO, CHIEF, PDT FACILITIES DESIGN
CHK BY: ABB
FILE NO.: AF0607 A-AR04SE

US Army Corps of Engineers
Transatlantic Programs Center

AFGHANISTAN NATIONAL POLICE (ANP) DISTRICT HEADQUARTERS COMPOUNDS - 1 STORY HQ
AFGHANISTAN
1 STORY BUILDING
WALL SECTION

SHEET REFERENCE NUMBER:
A
A-4

11/14/2006
h:\projects\afghanistan\af0607\af0607a\arc\ar04se.dwg

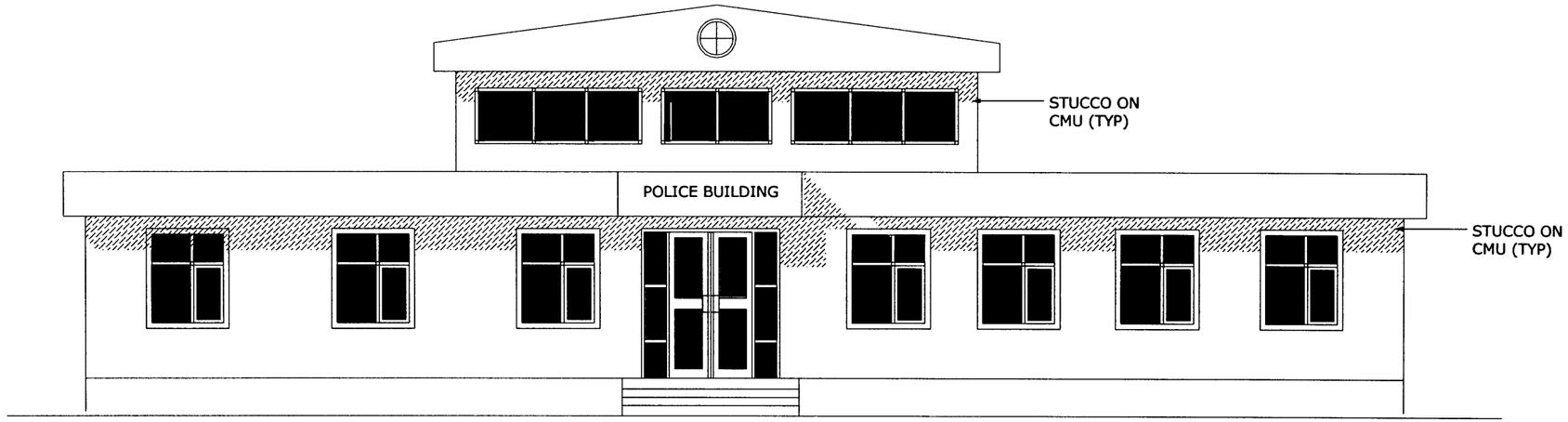


ELEVATION
SCALE 1:50
A
A-1 A-5

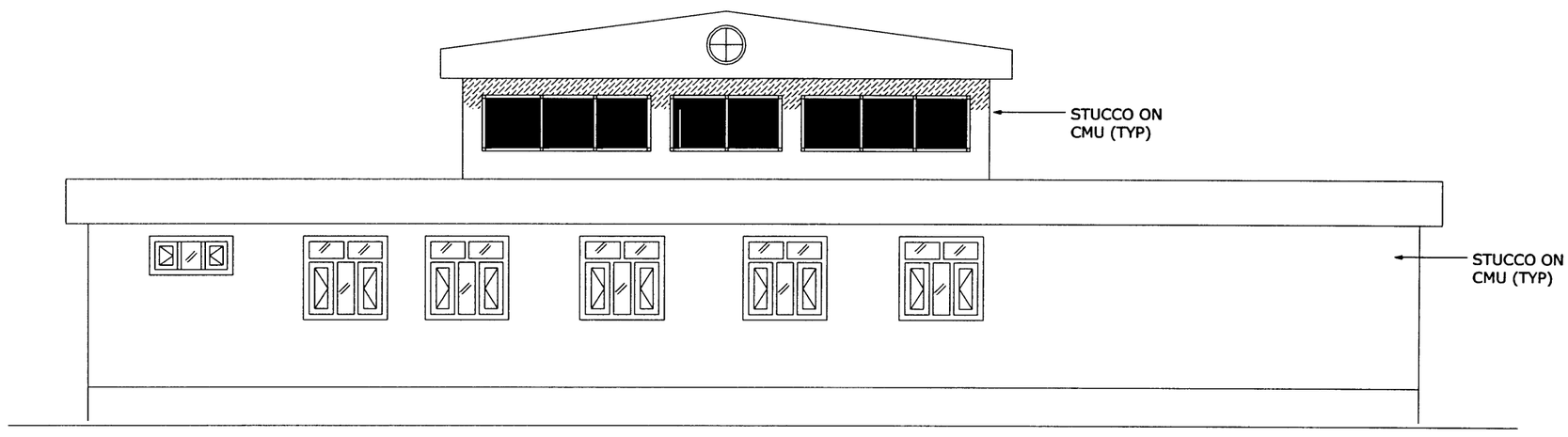


ELEVATION
SCALE 1:50
B
A-1 A-5

1 0 1 2 3 4
1:50

UNLESS OTHERWISE NOTED, LINEAR DIMENSIONS SHOWN ARE IN MILLIMETERS.

| SYMBOL | DESCRIPTION | DATE | APR |
|---|---|---|---|

DESIGNED BY: GA
DATE: 11-15-06
DWN BY: VLC
SUBMITTED BY: PHILIP J. DINELLO CHIEF, PDT FACILITIES DES
CHK BY: ABB
FILE NO.: AF0607 A-AROSEL

US Army Corps of Engineers
Transatlantic Programs Center

AFGHANISTAN NATIONAL POLICE (ANP) DISTRICT HEADQUARTERS COMPOUNDS - 1 STORY HQ
AFGHANISTAN
1 STORY BUILDING
BUILDING ELEVATIONS

SHEET REFERENCE NUMBER:
A
A-5

11/14/2006
h:\projects\afghanistan\af0607\af0607a\arc\ar05el.dwg

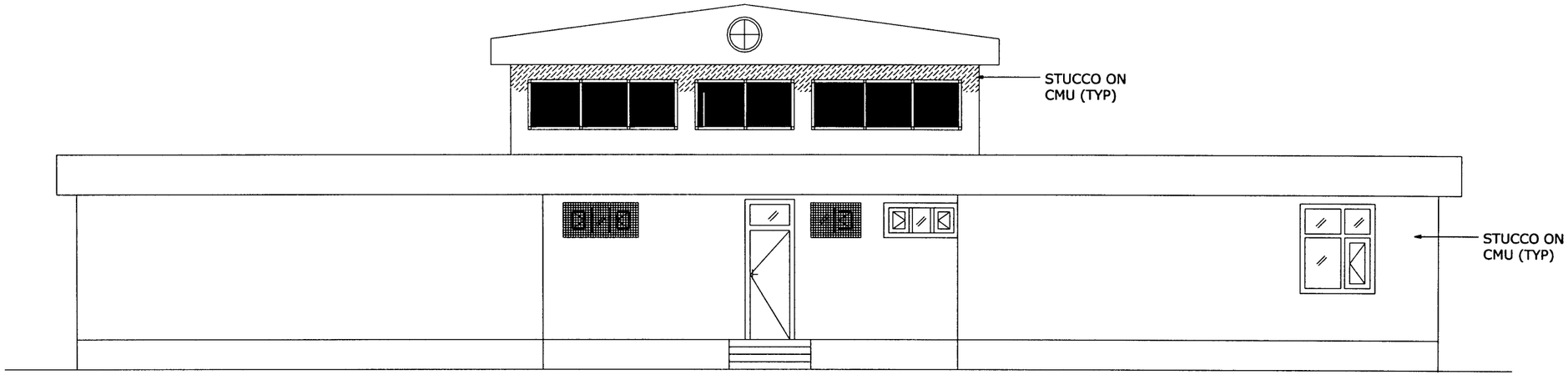


ELEVATION
SCALE 1:50
C
A-1 A-6

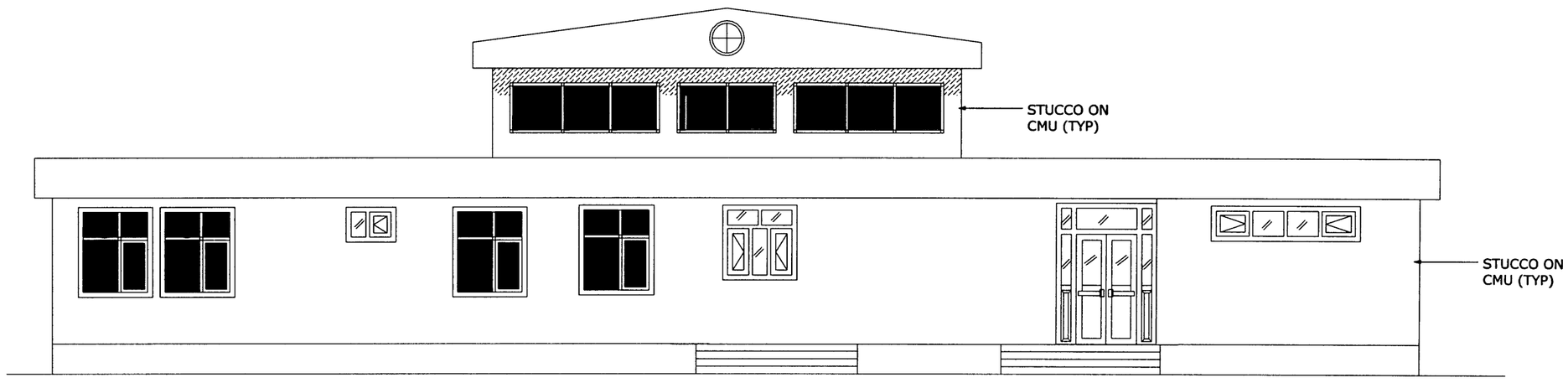


ELEVATION
SCALE 1:50
D
A-1 A-6

1 0 1 2 3 4
1:50

UNLESS OTHERWISE NOTED, LINEAR DIMENSIONS SHOWN ARE IN MILLIMETERS.

| SYMBOL | DESCRIPTION | DATE | APR |
|---|---|---|---|

DESIGNED BY: GA
DATE: 11-15-06
DWN BY: JSG
SUBMITTED BY: PHILIP J. DINELLO, CHIEF, PDT FACILITIES DES.
CHK BY: ABB
FILE NO.: AF0607 A-ARGEL

US Army Corps of Engineers
Transatlantic Programs Center

AFGHANISTAN NATIONAL POLICE (ANP) DISTRICT HEADQUARTERS COMPOUNDS - 1 STORY HQ
AFGHANISTAN
1 STORY BUILDING
BUILDING ELEVATIONS

SHEET REFERENCE NUMBER:
A
A-6

11/14/2006
h:\projects\afghanistan\af0607\af0607a\arc\ar06el.dwg

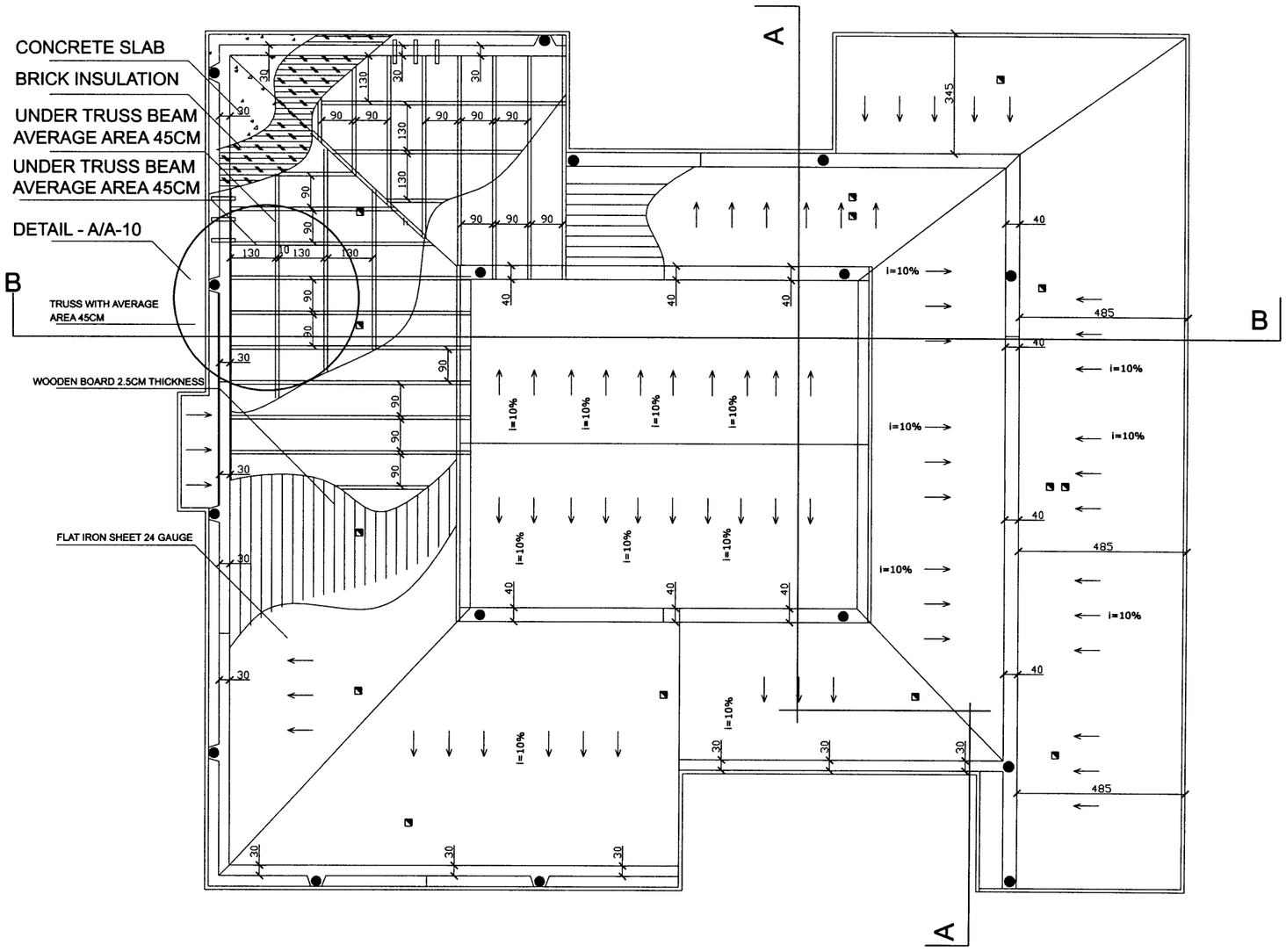


ROOF PLAN
SCALE- 1:75

3 1.50 0 3 4.5
1:75

UNLESS OTHERWISE NOTED, LINEAR DIMENSIONS SHOWN ARE IN MILLIMETERS.

| SYMBOL | DESCRIPTION | DATE | APP |
|---|---|---|---|

| | | |
|---|---|---|
| DESIGNED BY: GA | DATE: 11-15-06 | |
| DWN BY: VLC/JG | SUBMITTED BY: PHILIP J. DINELLO CHIEF, PDT FACILITIES DES | |
| CHK BY: ABB | FILE NO.: AF0607 A-AR07PN | |

US Army Corps of Engineers
Transatlantic Programs Center

AFGHANISTAN NATIONAL POLICE (ANP) DISTRICT HEADQUARTERS COMPOUNDS - 1 STORY HQ
AFGHANISTAN
1 STORY BUILDING
ROOF PLAN

SHEET REFERENCE NUMBER:
A
A-7

SHEET SIZE

11/14/2006
h:\projects\Afghanistan\af0607\af0607a\arc\ar07pn.dwgb

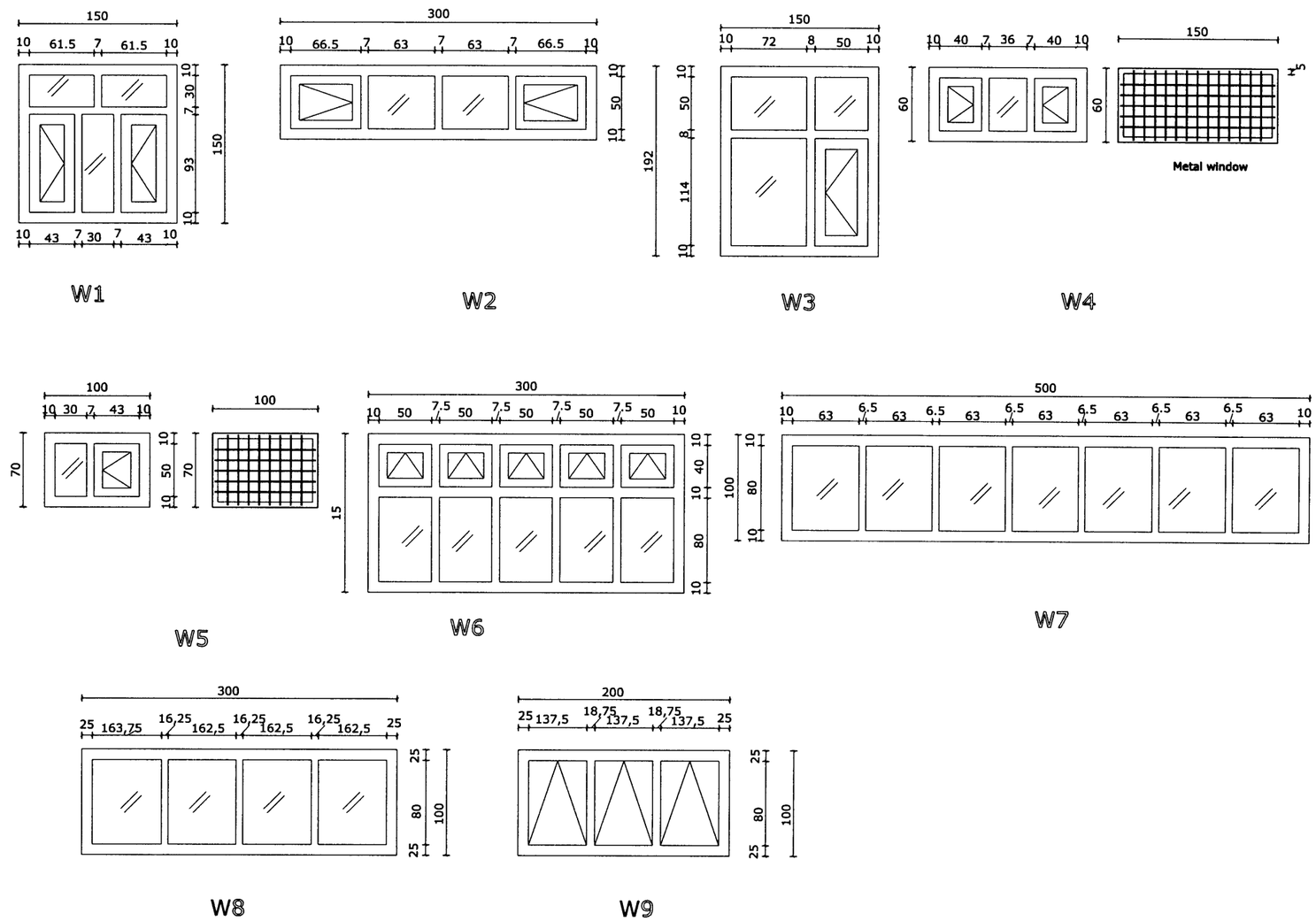


# NOTE:

1. REBARS TO BE INSTALLED ONLY ON WINDOWS AND DOORS OF PRISON ROOMS AND WEAPON ROOM AND ITS HALLWAYS.

2. PROVIDE METAL WINDOW GRILLS ONLY AT THE GUARD ROOM, THE TOILET FOR THE GUARD ROOM, AND THE HALLWAY TO THE PRISONERS ROOMS.

1 .50 0 1 1.5
1:25

UNLESS OTHERWISE NOTED, LINEAR DIMENSIONS SHOWN ARE IN MILLIMETERS.

| SYMBOL | DESCRIPTION | DATE | APP |
|---|---|---|---|

DESIGNED BY: GA | DATE: 11-15-06
DWN BY: VLC | SUBMITTED BY: PHILIP H. PINELLO CHIEF, PDT FACILITIES DES.
CHK BY: ABB | FILE NO.: AF0607 A-AR08DT

US Army Corps of Engineers
Transatlantic Programs Center

AFGHANISTAN NATIONAL POLICE (ANP) DISTRICT HEADQUARTERS COMPOUNDS - 1 STORY HQ
AFGHANISTAN
1 STORY BUILDING
WINDOW DETAILS

SHEET REFERENCE NUMBER:
A
A-8

11/14/2006
h:\projects\afghanistan\af0607\af0607a\arc\ar08dt.dwg

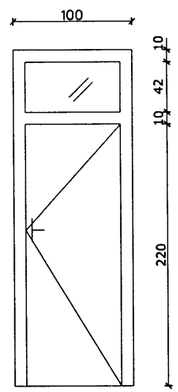


D1

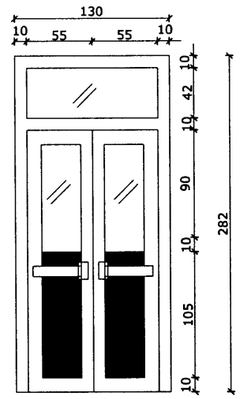


D2

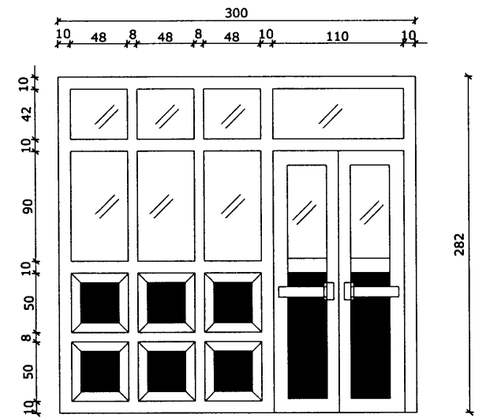


D3

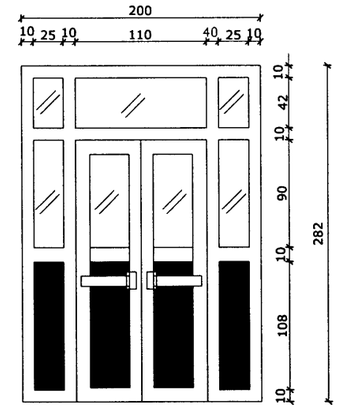


D4

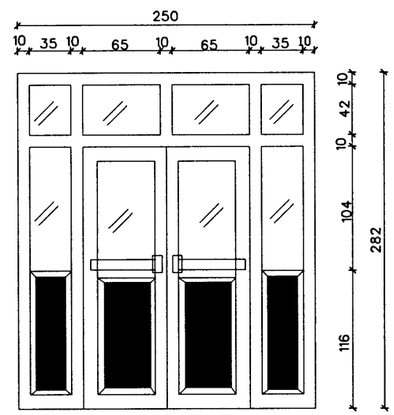


D5

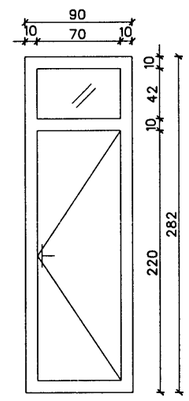


D6

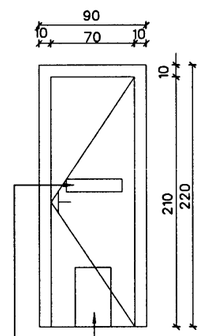


30 WIDE X 50 TALL HINGED DOOR, LOCKABLE FROM THE OUTSIDE

HINGED PASS-THROUGH SLOT FOR FOOD TRAYS. LOCKABLE FROM THE OUTSIDE.

D7
11-13 GAUGE STEEL DOOR

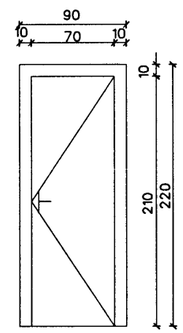


D8

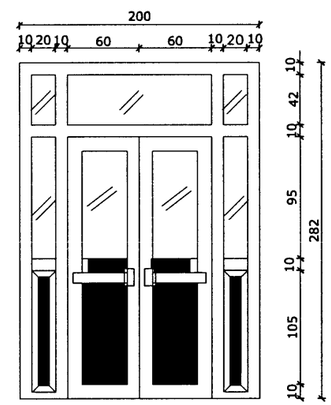


D9

1 .50 0 1 1.5
1:25

UNLESS OTHERWISE NOTED, LINEAR DIMENSIONS SHOWN ARE IN MILLIMETERS.

| SYMBOL | DESCRIPTION | DATE | APR. |
|---|---|---|---|

DESIGNED BY: GA
DATE: 11-15-06
DWN BY: VLC
SUBMITTED BY: PHILIP J. PANELLO PROJECT DIRECTOR
CHK BY: ABB
FILE NO.: AF0607 A-AR09DT

US Army Corps of Engineers
Transatlantic Programs Center

AFGHANISTAN NATIONAL POLICE (ANP) DISTRICT HEADQUARTERS COMPOUNDS - 1 STORY HQ
AFGHANISTAN
1 STORY BUILDING
DOOR DETAILS

SHEET REFERENCE NUMBER:
A
A-9

11/14/2006
h:\projects\afghanistan\af0607\af0607a\arc\ar09dt.dwg

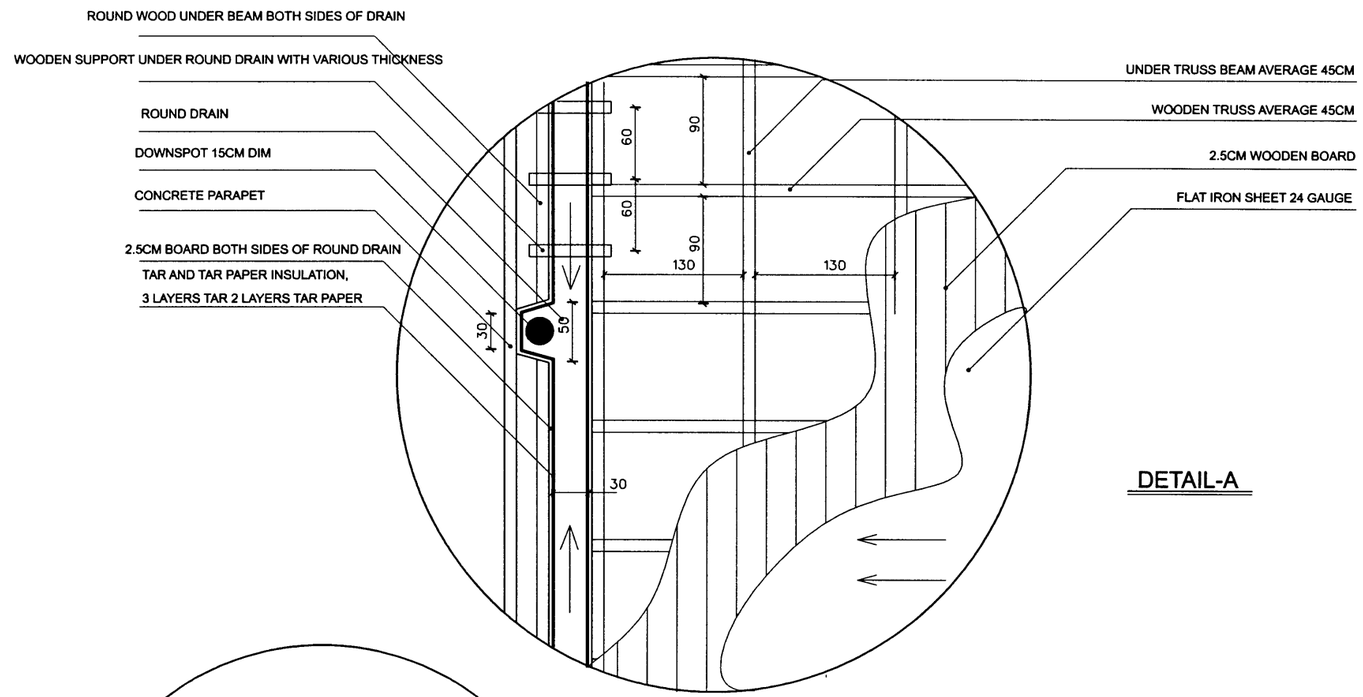


DETAIL-A

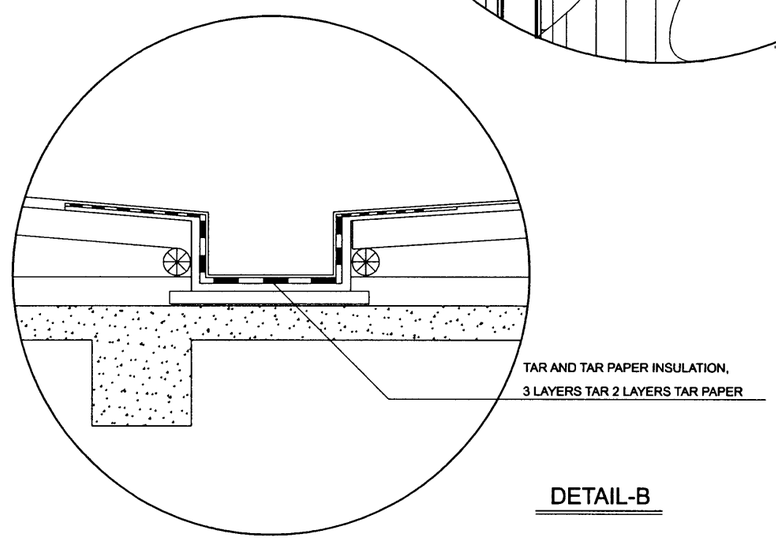


DETAIL-B

UNLESS OTHERWISE NOTED, LINEAR DIMENSIONS SHOWN ARE IN MILLIMETERS.

| SYMBOL | DESCRIPTION | DATE | APP |
|---|---|---|---|

DESIGNED BY: GA | DATE: 11-15-06
DWN BY: VLC | SUBMITTED BY: PHILIP J. PINELLO CHIEF, PDT FACILITIES DES.
CHK BY: ABB | FILE NO.: AF0607 A-AR10DT

US Army Corps of Engineers
Transatlantic Programs Center

AFGHANISTAN NATIONAL POLICE (ANP) DISTRICT HEADQUARTERS COMPOUNDS - 1 STORY HQ
AFGHANISTAN
1 STORY BUILDING
ROOF DETAILS

SHEET REFERENCE NUMBER:
A
A-10

11/14/2006
h:\projects\afghanistan\af0607\af0607a\arc\ar10dt.dwg

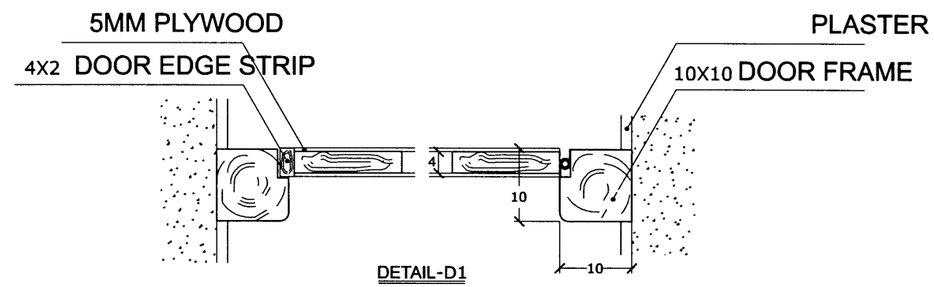


DETAIL-D1

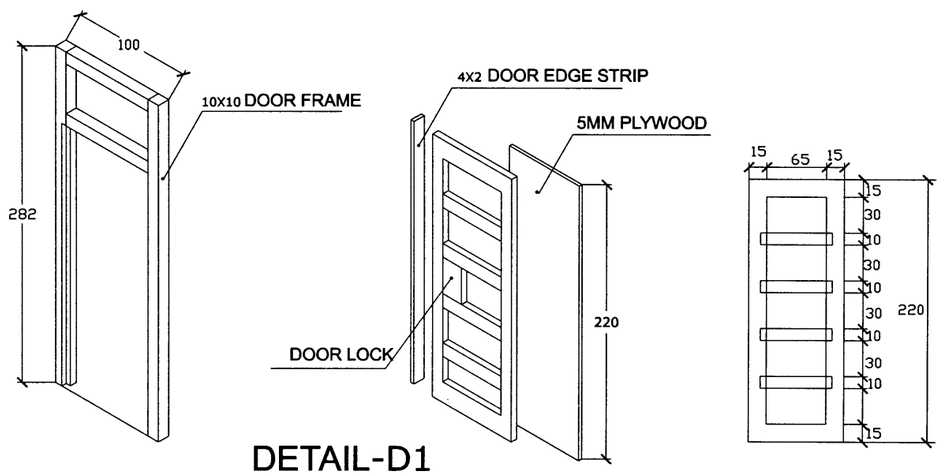


DETAIL-D1

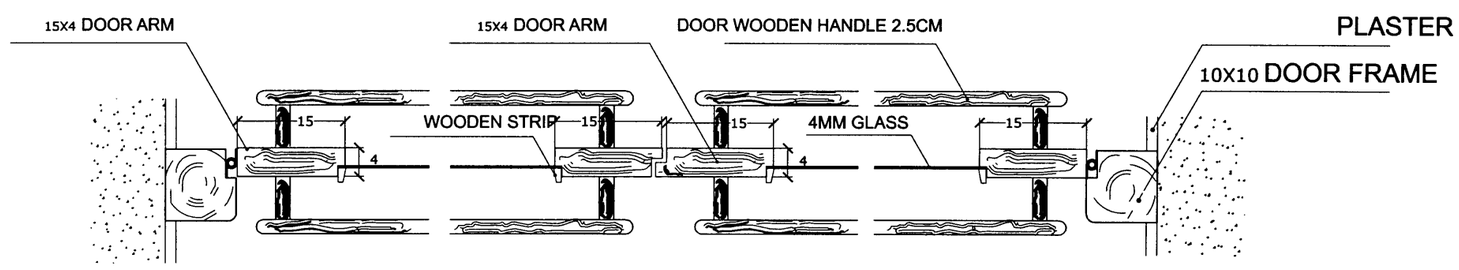


DETAIL-D2

UNLESS OTHERWISE NOTED, LINEAR DIMENSIONS SHOWN ARE IN MILLIMETERS.

| SYMBOL | DESCRIPTION | DATE | APR |
|---|---|---|---|

DESIGNED BY: GA | DATE: 11-15-06
DWN BY: VLC | SUBMITTED BY: PHILIP J. DINELLO, CHIEF, PDT FACILITIES DEV
CHK BY: ABB | FILE NO.: AF0607 A-AR11DT

US Army Corps of Engineers
Transatlantic Programs Center

AFGHANISTAN NATIONAL POLICE (ANP) DISTRICT HEADQUARTERS COMPOUNDS - 1 STORY HQ
AFGHANISTAN
1 STORY BUILDING
DOOR DETAILS

SHEET REFERENCE NUMBER:
A
A-11

11/14/2006
h:\projects\afghanistan\af0607\af0607a\arc\ar11dt.dwg

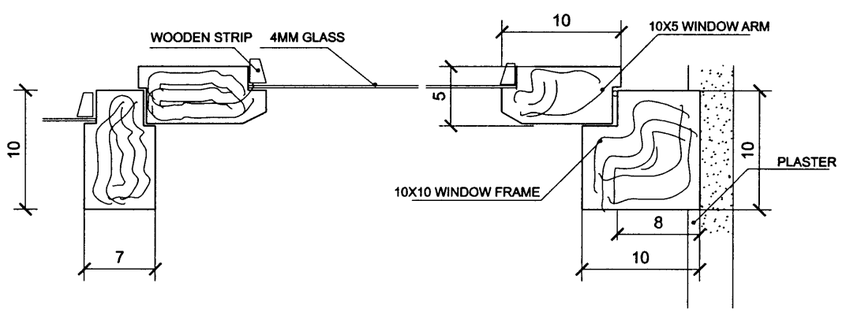


DETAIL OF WOODEN WINDOWS

UNLESS OTHERWISE NOTED, LINEAR DIMENSIONS SHOWN ARE IN MILLIMETERS.

| SYMBOL | DESCRIPTION | DATE | APR |
|---|---|---|---|

DESIGNED BY: GA
DATE: 11-15-06
DWN BY: VLC
SUBMITTED BY: PHILIP J. PINELLO, CHIEF, POT FACILITIES DES.
CHK BY: ABB
FILE NO.: AF0607 A-AR12DT

US Army Corps of Engineers
Transatlantic Programs Center

AFGHANISTAN NATIONAL POLICE (ANP) DISTRICT HEADQUARTERS COMPOUNDS - 1 STORY HQ
AFGHANISTAN
1 STORY BUILDING
DOOR DETAILS

SHEET REFERENCE NUMBER:
A
A-12

11/14/2006
h:\projects\afghanistan\af0607\af0607a\arc\ar12dt.dwg

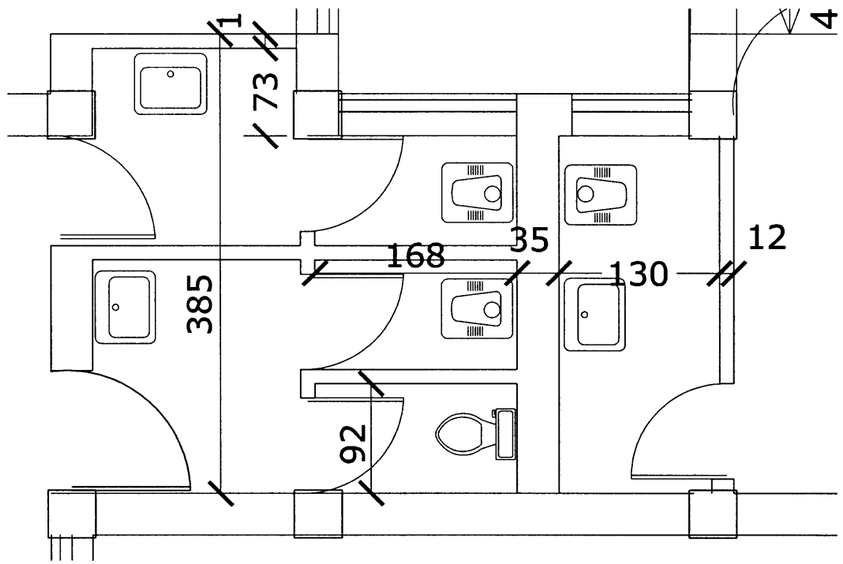


DETAIL 1 (A-1 | A-13)
SCALE-1:25

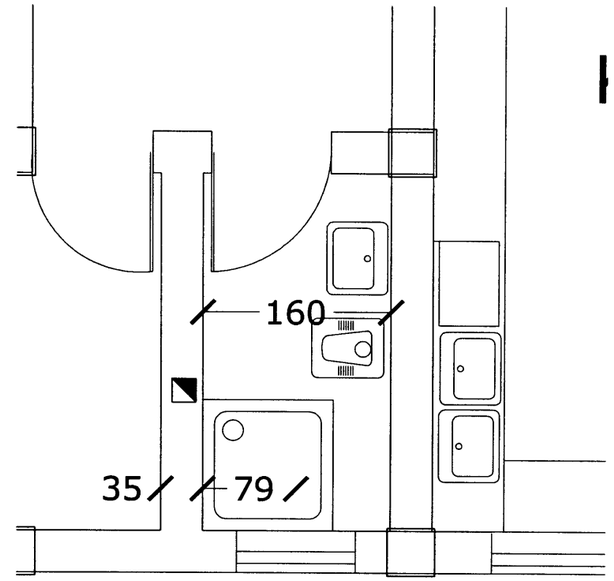


DETAIL 3 (A-1 | A-13)
SCALE-1:25

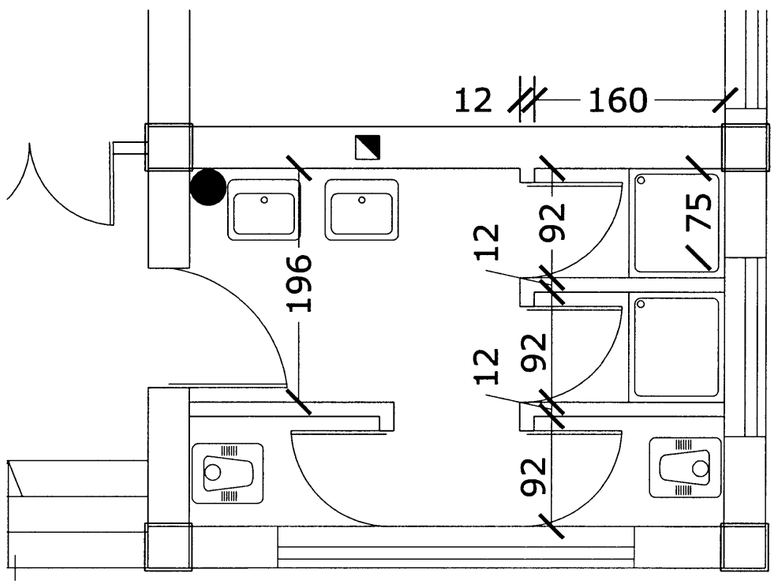


DETAIL 2 (A-1 | A-13)
SCALE-1:25

NOTES:
1. ALL WATER CLOSETS SHALL FACE NORTH OR SOUTH DIRECTION.

1 .50 0 1 1.5
1:25

UNLESS OTHERWISE NOTED, LINEAR DIMENSIONS SHOWN ARE IN MILLIMETERS.

| SYMBOL | DESCRIPTION | DATE | APP |
|---|---|---|---|

DESIGNED BY: GA
DATE: 11-15-06
DWN BY: ABB
SUBMITTED BY: PHILIP J. PINELLO, CHIEF, POT FACILITIES DES
CHK BY: ABB
FILE NO.: AF0607 A-AR13LS

US Army Corps of Engineers
Transatlantic Programs Center

AFGHANISTAN NATIONAL POLICE (ANP) DISTRICT HEADQUARTERS COMPOUNDS - 1 STORY HQ
AFGHANISTAN
1 STORY BUILDING
ENLARGED TOILET PLANS

SHEET REFERENCE NUMBER:
A
A-13

11/14/2006
h:\projects\afghanistan\af0607\af0607a\arc\ar13ls.dwg

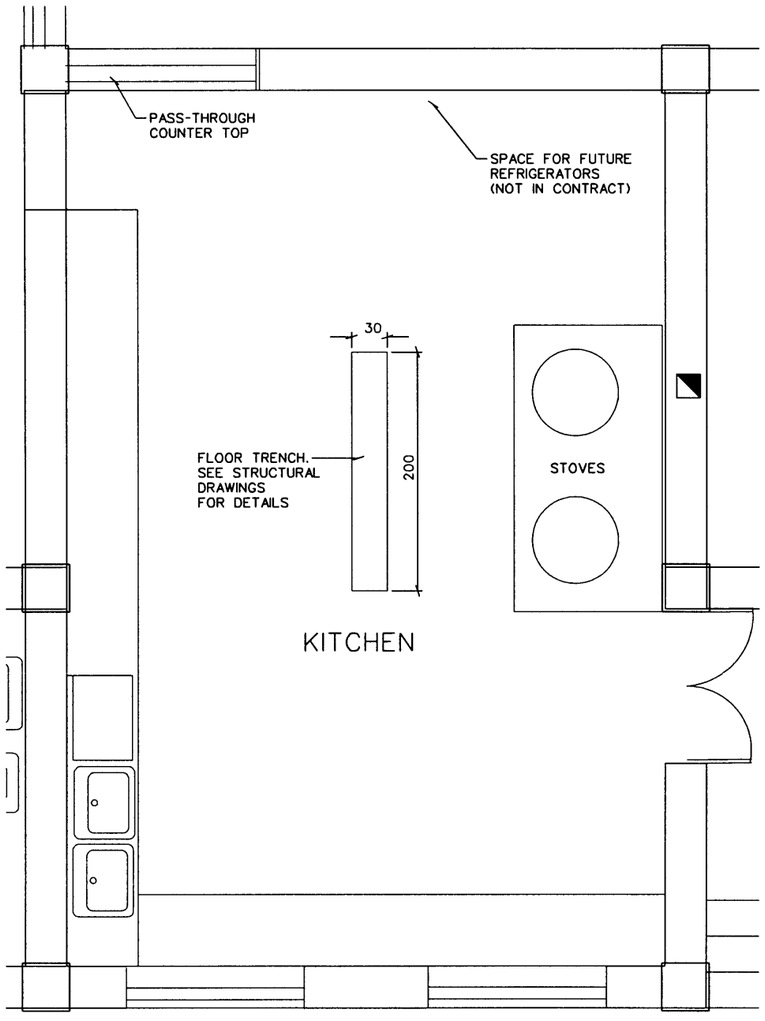


DETAIL 4 A-1 A-14
SCALE - 1:25

1 .50 0 1 1.5
1:25

UNLESS OTHERWISE NOTED, LINEAR DIMENSIONS SHOWN ARE IN MILLIMETERS.

| SYMBOL | DESCRIPTION | DATE | APR |
|---|---|---|---|

DESIGNED BY: GA
DATE: 11-15-06
DWN BY: ABB
SUBMITTED BY: PHILIP J. PINELLO CHIEF, PDT FACILITIES DES.
CHK BY: ABB
FILE NO.: AF0607 A-AR14LS

US Army Corps of Engineers
Transatlantic Programs Center

AFGHANISTAN NATIONAL POLICE (ANP) DISTRICT HEADQUARTERS COMPOUNDS - 1 STORY HQ
AFGHANISTAN
1 STORY BUILDING
ENLARGED KITCHEN PLAN

SHEET REFERENCE NUMBER:
A
A-14

11/14/2006
h:\projects\afghanistan\af0607\af0607a\arc\ar14ls.dwg

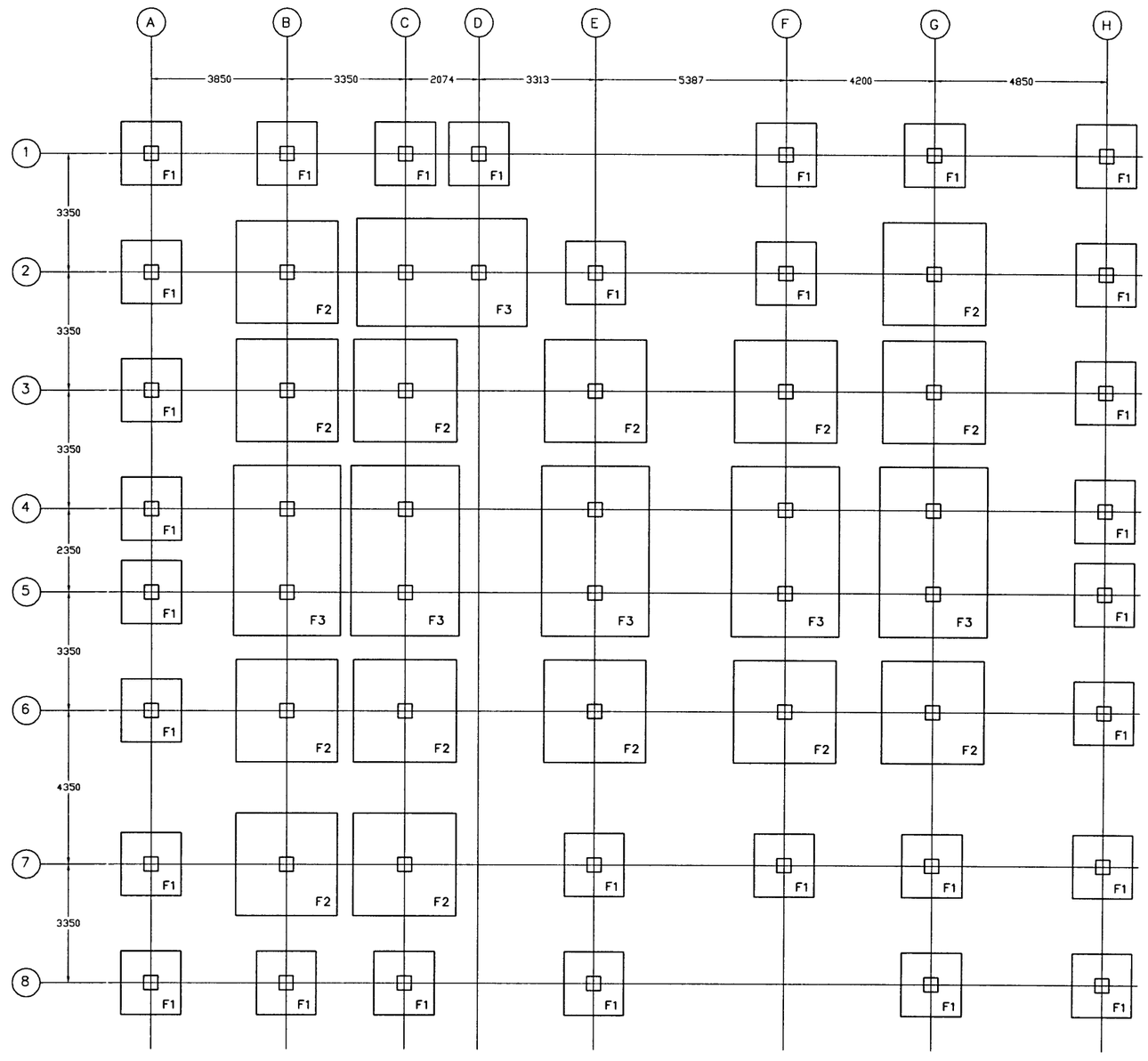


NOTES:
1. GEOTECHNICAL INVESTIGATION SHALL CONFIRM BEARING CAPACITY TO BE NO LESS THAN 0.75 KG/SQ CM. IF GEOTECHNICAL INVESTIGATION SHOWS LESS THAN 0.75 KG/SQ CM, CONTRACTOR SHALL REDESIGN FOOTINGS BASED ON THE GEOTECHNICAL INVESTIGATION. SEE SPECIFICATION 01015 PARA 2.1, GEOTECHNICAL, FOUNDATION AND SURVEY.

2. DEAD LOADS CONSIST OF THE WEIGHTS OF ALL MATERIAL OF CONSTRUCTION INCORPORATED IN THE BUILDING. LIVE LOADS USED FOR DESIGN SHALL BE IN ACCORDANCE WITH THE ASCE STANDARDS AND MINIMUM DESIGN LOADS FOR BUILDINGS AND OTHER STRUCTURES, ASCE 7-02.

3. WIND LOADS SHALL BE CALCULATED IN ACCORDANCE WITH ASCE 7-02 USING A "3 SECOND GUST" WIND SPEED OF 125 KM/HR. ALL FACILITIES SHALL BE CLASSIFIED AS A MINIMUM OF CATEGORY II IN ACCORDANCE WITH TABLE 1-1 IN ASCE 7-02.

4. THE BUILDING AND ALL PARTS THEREOF SHALL BE DESIGNED FOR THE SEISMIC REQUIREMENTS AS DEFINED BY THE INTERNATIONAL BUILDING CODE 2000. SITE SPECIFIC DATA: SPECTRAL COORDINATES SS=1.65g AND S1=0.75g.

| SYMBOL | DESCRIPTION | DATE | APR |
|---|---|---|---|

DESIGNED BY: TCP
DATE: 11-15-06
DWN BY: TCP
SUBMITTED BY: PHILIP J. PINELLO, CHIEF, PDT FACILITIES DES.
CHK BY: KGO
FILE NO.: AF0607A-SB01PN

US Army Corps of Engineers
Transatlantic Programs Center

AFGHANISTAN NATIONAL POLICE (ANP) DISTRICT HEADQUARTERS COMPOUNDS - 1 STORY HQ
AFGHANISTAN
1 STORY BUILDING
FOUNDATION PLAN

SHEET REFERENCE NUMBER:
A
S-1

UNLESS OTHERWISE NOTED, LINEAR DIMENSIONS SHOWN ARE IN MILLIMETERS.

11/14/2006
h:\projects\afghanistan\af0607\af0607a\str\AF0607A-SB01PN.dwg

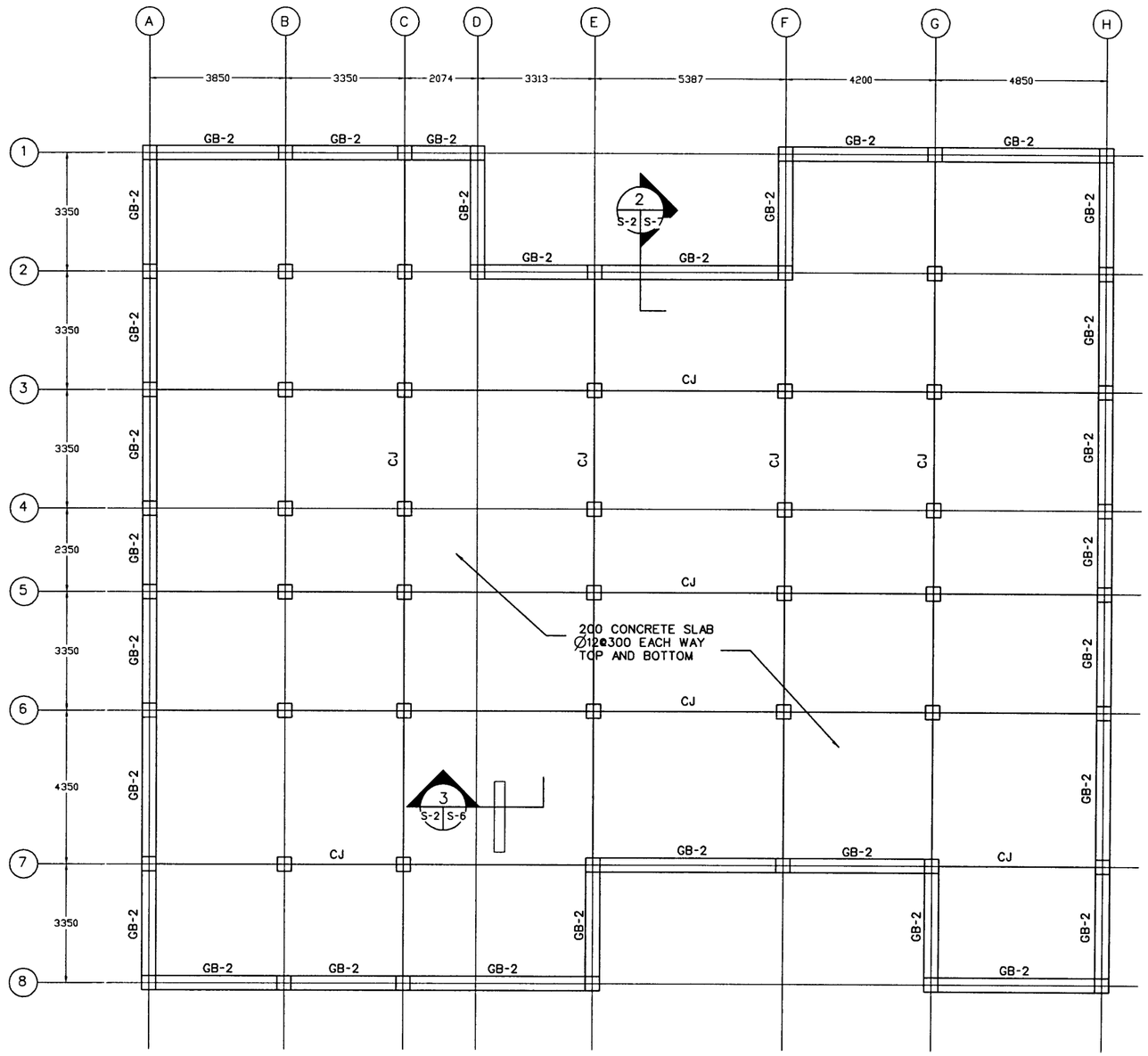


UNLESS OTHERWISE NOTED, LINEAR DIMENSIONS SHOWN ARE IN MILLIMETERS.

| SYMBOL | DESCRIPTION | DATE | APP |
|---|---|---|---|

DESIGNED BY: TCP
DATE: 11-15-06
DWN BY: TCP
SUBMITTED BY: PHILIP J. PINELLO CHIEF, POT FACILITIES DES.
CHK BY: KGO
FILE NO.: AF0607 A-SB02PN

US Army Corps of Engineers
Transatlantic Programs Center

AFGHANISTAN NATIONAL POLICE (ANP) DISTRICT HEADQUARTERS COMPOUNDS - 1 STORY HQ
AFGHANISTAN
1 STORY BUILDING
GRADE BEAM PLAN

SHEET REFERENCE NUMBER:
A
S-2

11/14/2006
h:\projects\afghanistan\af0607\af0607a\str\AF0607A-SB02PN.dwg

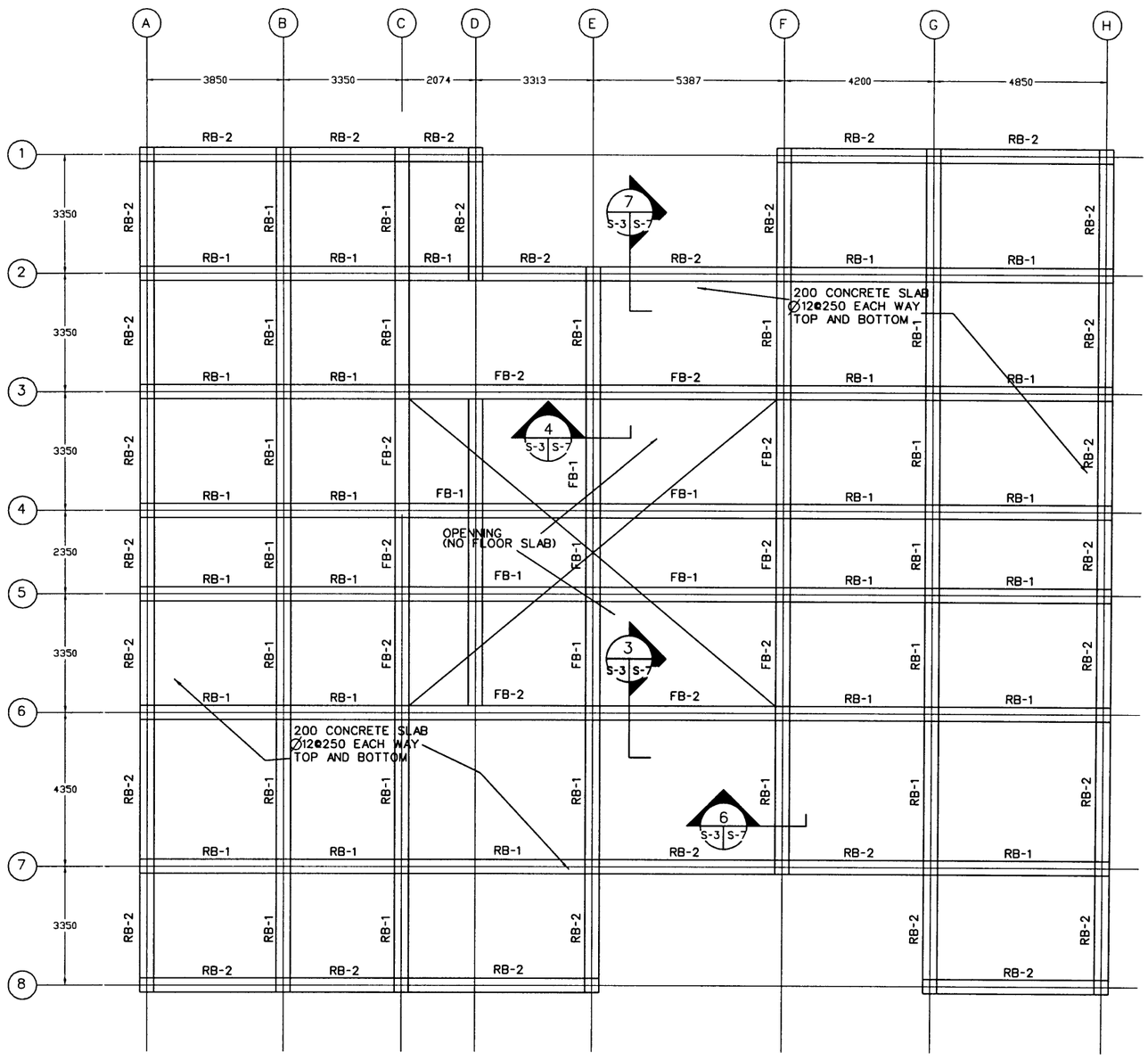


UNLESS OTHERWISE NOTED, LINEAR DIMENSIONS SHOWN ARE IN MILLIMETERS.

| SYMBOL | DESCRIPTION | DATE | APR |
|---|---|---|---|

DESIGNED BY: TCP
DATE: 11-15-06
DWN BY: TCP
SUBMITTED BY: PHILLIP J. PINELLO CHIEF, PDT FACILITIES DES.
CHK BY: KGO
FILE NO.: AF0607 A-SB03PN

US Army Corps of Engineers
Transatlantic Programs Center

AFGHANISTAN NATIONAL POLICE (ANP) DISTRICT HEADQUARTERS COMPOUNDS - 1 STORY HQ
AFGHANISTAN
1 STORY BUILDING
LOWER ROOF BEAM PLAN

SHEET REFERENCE NUMBER:
A
S-3

11/14/2006
h:\projects\afghanistan\af0607\af0607a\str\AF0607A-SB03PN.dwg

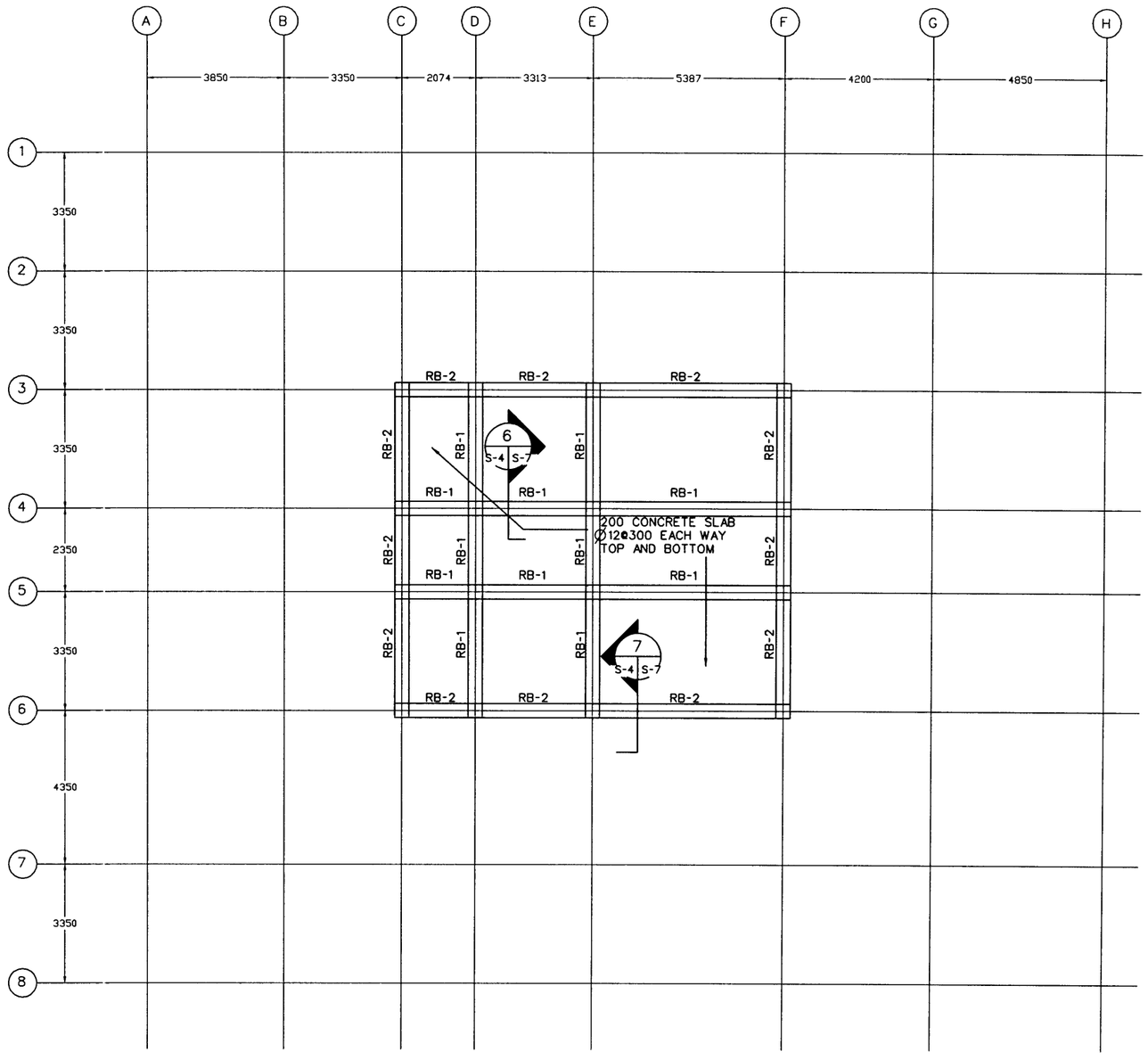


UNLESS OTHERWISE NOTED, LINEAR DIMENSIONS SHOWN ARE IN MILLIMETERS.

| SYMBOL | DESCRIPTION | DATE | APP |
|---|---|---|---|

DESIGNED BY: TCP
DATE: 11-15-06
DWN BY: TCP
SUBMITTED BY: PHILIP J. PINELLO, CHIEF, PDT FACILITIES DES.
CHK BY: KGO
FILE NO.: AF0607 A-SB04PN

US Army Corps of Engineers
Transatlantic Programs Center

AFGHANISTAN NATIONAL POLICE (ANP) DISTRICT HEADQUARTERS COMPOUNDS - 1 STORY HQ
AFGHANISTAN
1 STORY BUILDING
HIGH ROOF BEAM PLAN

SHEET REFERENCE NUMBER:
A
S-4

11/14/2006
h:\projects\afghanistan\af0607\af0607a\str\AF0607A-SB04PN.dwg

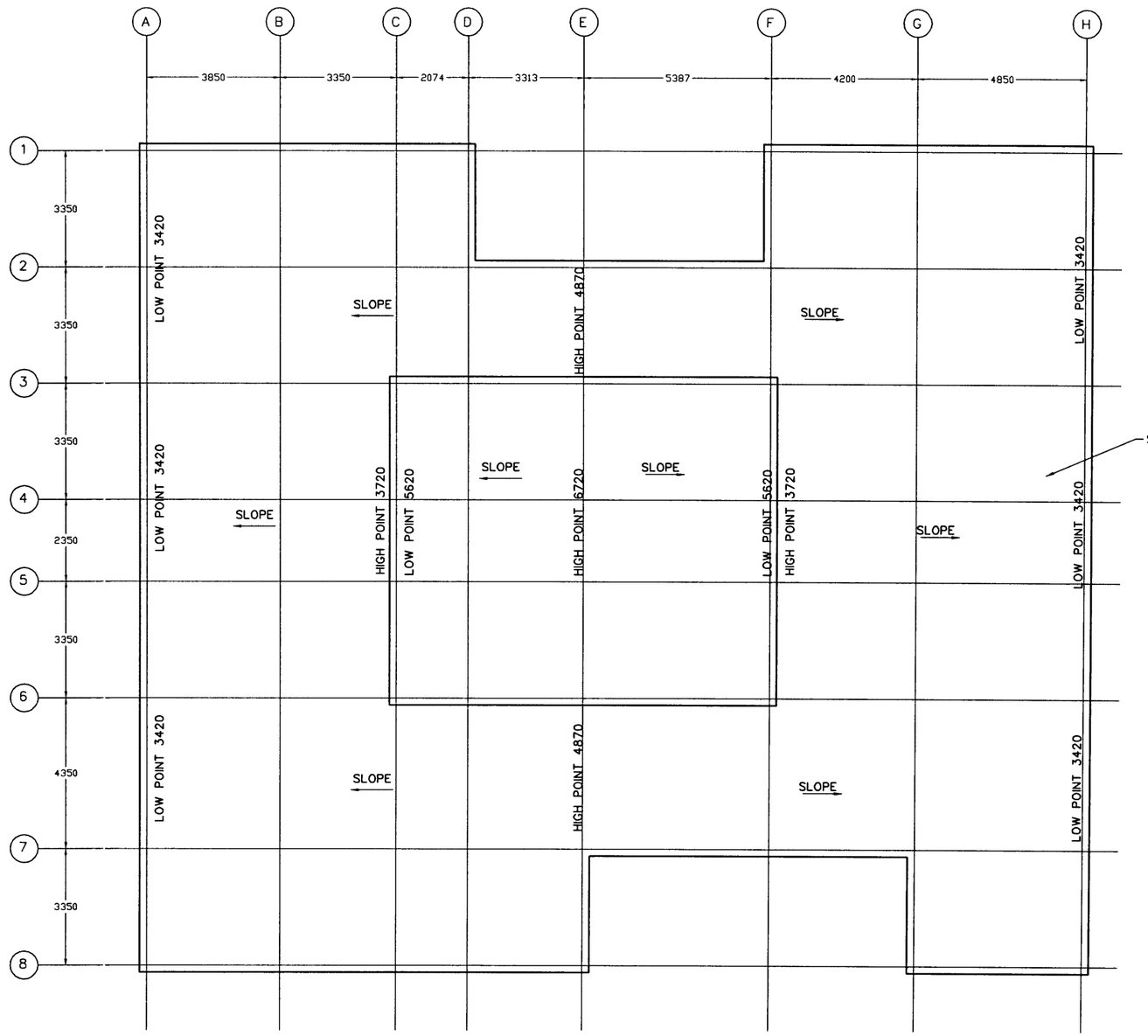


UNLESS OTHERWISE NOTED, LINEAR DIMENSIONS SHOWN ARE IN MILLIMETERS.

| SYMBOL | DESCRIPTION | DATE | APPR |
|---|---|---|---|

DESIGNED BY: TCP
DATE: 11-15-06
DWN BY: TCP
SUBMITTED BY: PHILIP J. PINELLO, CHIEF, PDT FACILITIES DEV
CHK BY: KGO
FILE NO.: AF0607 A-S805PN

US Army Corps of Engineers
Transatlantic Programs Center

AFGHANISTAN NATIONAL POLICE (ANP) DISTRICT HEADQUARTERS COMPOUNDS - 1 STORY HQ
AFGHANISTAN
1 STORY BUILDING
ROOF SLOPE AND ELEVATIONS

SHEET REFERENCE NUMBER:
A
S-5

11/14/2006
h:\projects\afghanistan\af0607\af0607a\str\AF0607A-S805PN.dwg

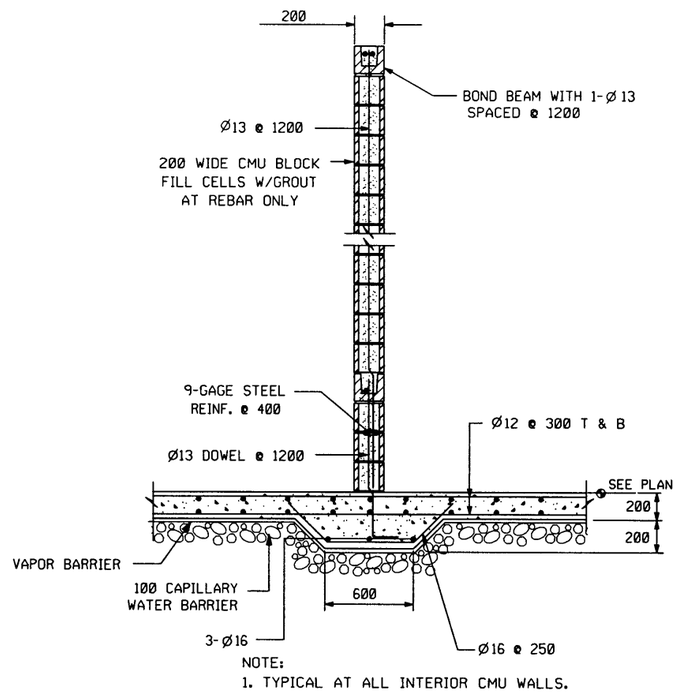


NOTE:
1. TYPICAL AT ALL INTERIOR CMU WALLS.

**WALL SECTION** 2 (S-1 | S-9)
SCALE NTS

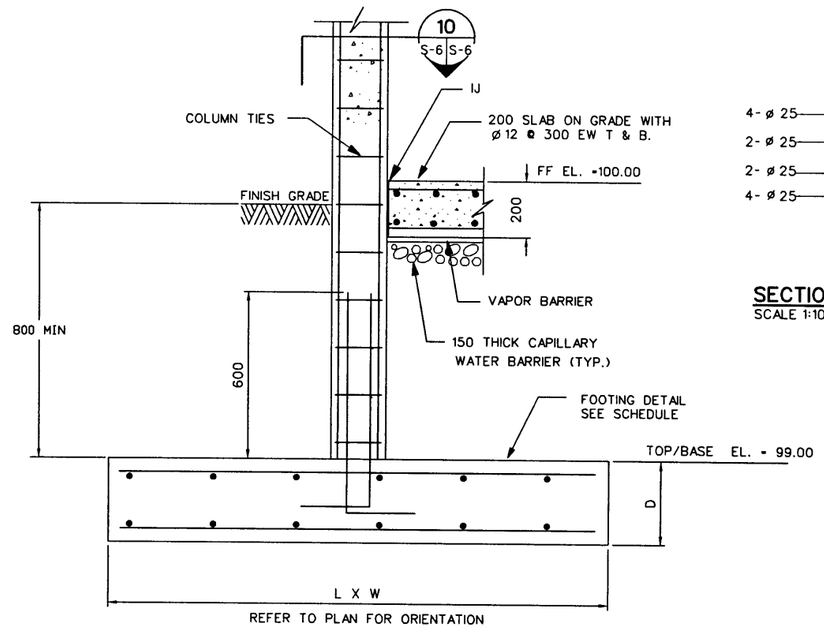


REFER TO PLAN FOR ORIENTATION

**SECTION** 1 (S-1 | S-3)
SCALE 1:10

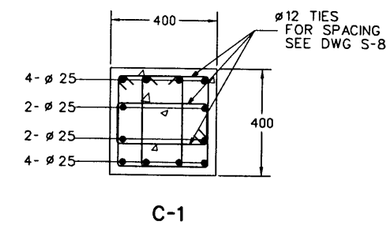


**SECTION** 10 (S-6 | S-6)
SCALE 1:10

| FOOTING SCHEDULE | | | | |
|---|---|---|---|---|
| FTG TYPE | SIZE (L X W) | DEPTH (D)* | REINF. | |
| | | | TOP EW | BOTT EW |
| F1 | 1700 X 1700 | 250 | Ø25 @ 300 | Ø25 @ 300 |
| F2 | 2700 X 2700 | 425 | Ø25 @ 350 | Ø25 @ 350 |
| F3 | 4800 X 3050 | 425 | Ø25 @ 350 | Ø25 @ 350 |

*TOP FOOTING ELEVATION SHALL BE THE SAME FOR ALL FOOTINGS.
*FOR THE COMBINED FOOTINGS, CENTER ON THE CENTROID FOR THE TWO COLUMNS.
*REFER TO PLAN FOR ORIENTATION.

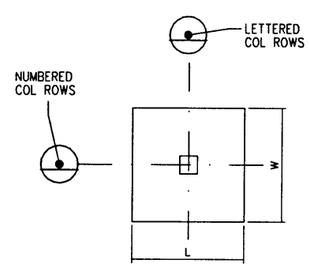


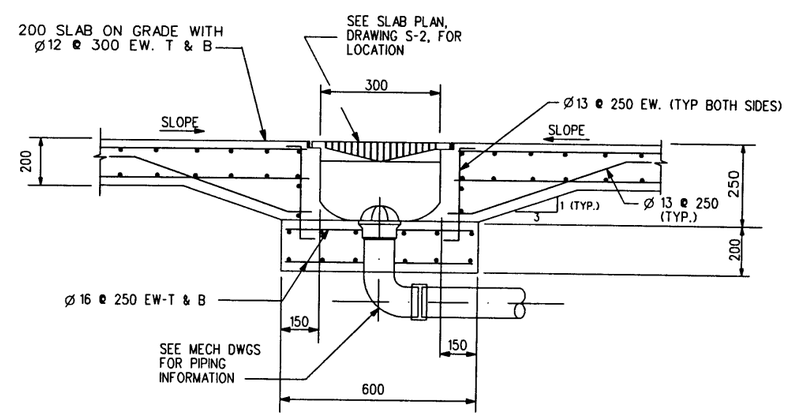


**SECTION** 3 (S-2 | S-6)
N.T.S.

UNLESS OTHERWISE NOTED, LINEAR DIMENSIONS SHOWN ARE IN MILLIMETERS.

| DESIGNED BY: TCP | DATE: 11-15-06 |
|---|---|
| DWN BY: TCP | SUBMITTED BY: PHILLIP J. PINELLO CHIEF, ADT FACILITIES DES. |
| CHK BY: KGO | FILE NO.: AF0607 A-SB06PN |

US Army Corps of Engineers
Transatlantic Programs Center

AFGHANISTAN NATIONAL POLICE (ANP) DISTRICT HEADQUARTERS COMPOUNDS - 1 STORY HQ
AFGHANISTAN
1 STORY BUILDING
FOOTING AND COLUMN DETAILS

SHEET REFERENCE NUMBER:
A
S-6

11/14/2006
h:\projects\afghanistan\af0607\af0607a\str\AF0607A-SB06DT.dwg

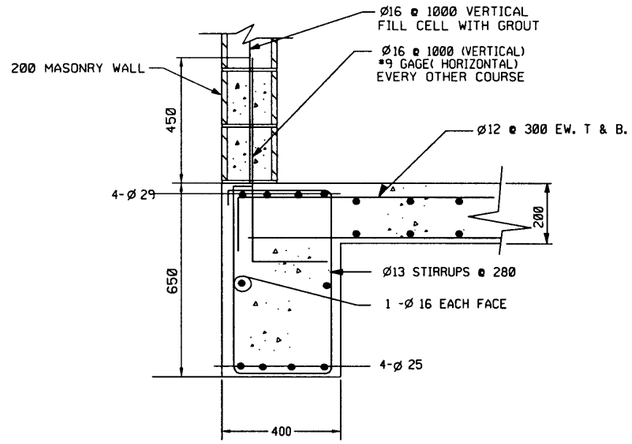


GB-2

SECTION 2 (S-2 | S-7)
SCALE 1:10

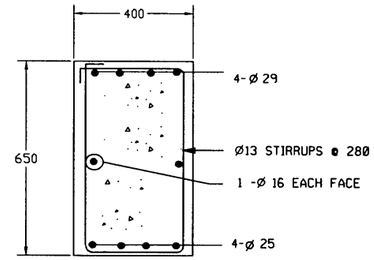


FB-1

SECTION 4 (S-3 | S-7)
SCALE 1:10

NOTE:

1. GRADE BEAM REINFORCING IS CONTINUOUS THROUGH THE COLUMN AND COLUMN FOOTINGS.

2. COORDINATE REBAR PLACEMENT BETWEEN BEAMS OF DIFFERENT WIDTHS SO THAT A MAXIMUM NUMBER OF REBAR IS CONTINUOUS. BEND BARS AS REQUIRED.

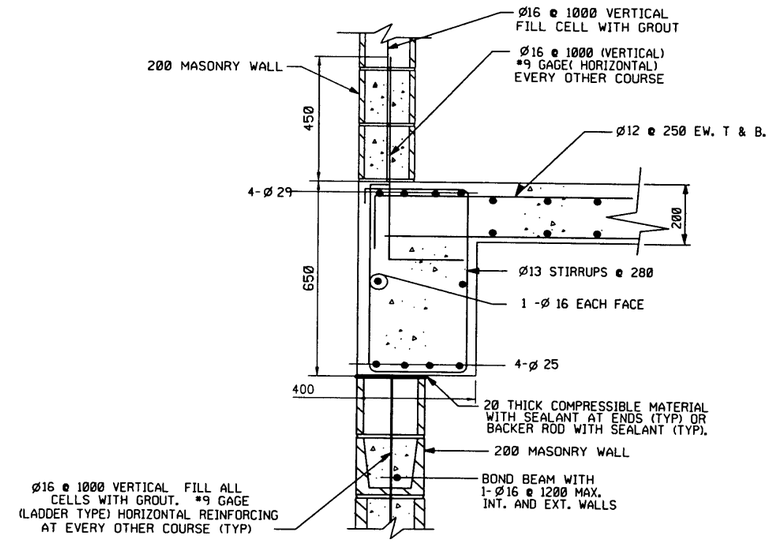


FB-2

SECTION 3 (S-3 | S-7)
SCALE 1:10

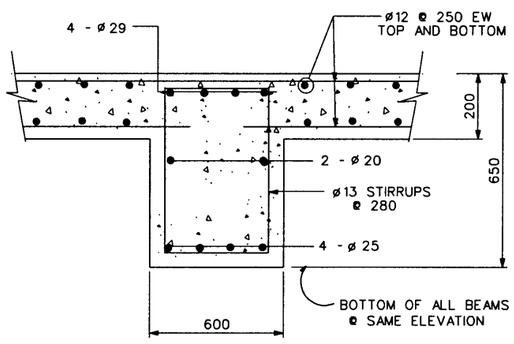


RB-1

SECTION 6 (S-3, S-4 | S-7)
SCALE

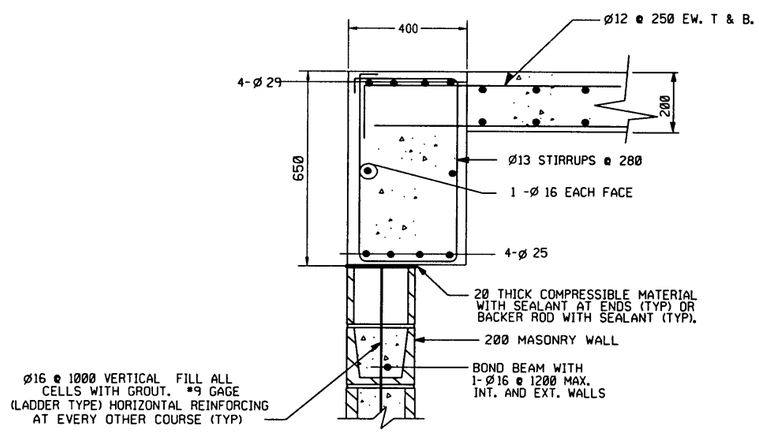


RB-2

SECTION 7 (S-3, S-4 | S-7)
SCALE 1:10

UNLESS OTHERWISE NOTED, LINEAR DIMENSIONS SHOWN ARE IN MILLIMETERS.

| STAMPS | DESCRIPTION | DATE | APR |
|---|---|---|---|

DESIGNED BY: TCP
DATE: 11-15-06
DWN BY: TCP
SUBMITTED BY: PHILLIP J. PINELLO, CHIEF, PDT FACILITIES DES.
CHK BY: KGO
FILE NO.: AF0607 A-SB07DT

US Army Corps of Engineers
Transatlantic Programs Center

AFGHANISTAN NATIONAL POLICE (ANP) DISTRICT HEADQUARTERS COMPOUNDS - 1 STORY HQ
AFGHANISTAN
1 STORY BUILDING
BEAM DETAILS

SHEET REFERENCE NUMBER:
A
S-7

11/14/2006
h:\projects\afghanistan\af0607\af0607a\str\AF0607A-SB07DT.dwg

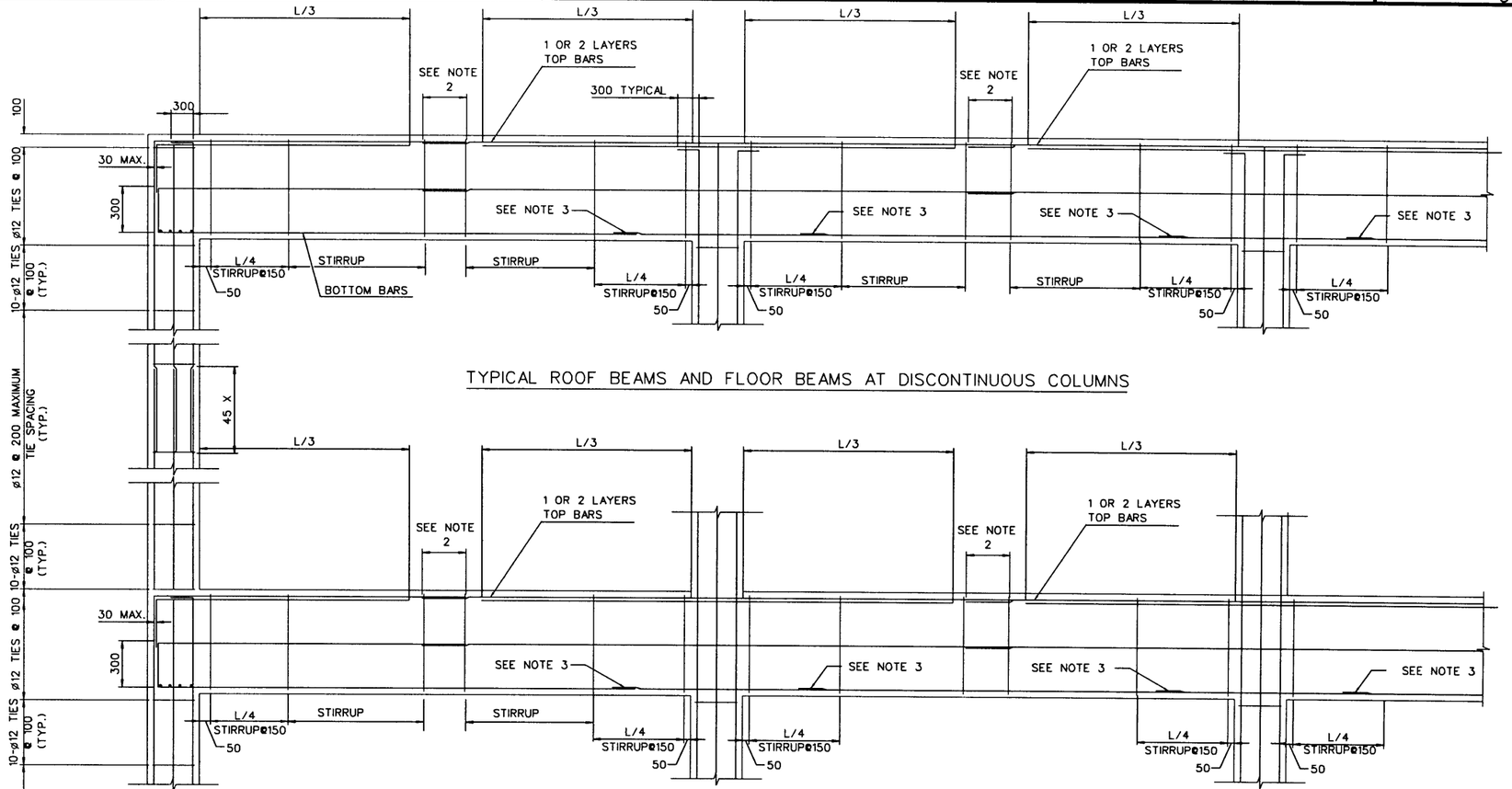


TYPICAL ROOF BEAMS AND FLOOR BEAMS AT DISCONTINUOUS COLUMNS

TYPICAL FLOOR BEAMS

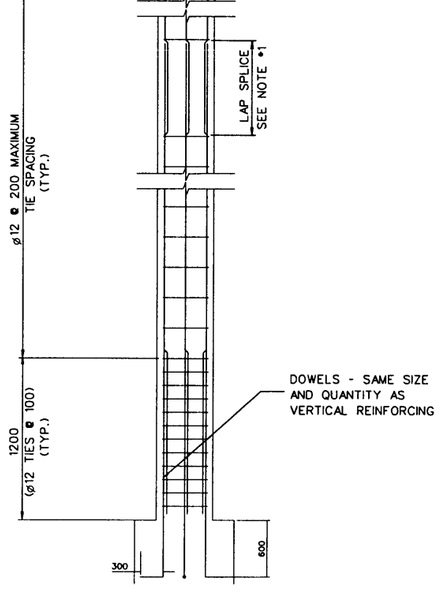


STANDARD BEAM AND COLUMN DETAIL

NOTES:

1. ALL LAP SPLICES IN BEAMS AND COLUMNS SHALL BE CLASS B SPLICES

2. PROVIDE A 150mm MAXIMUM OF STIRRUP SPACING AT LAP SPLICES, AS SHOWN ON DRAWING. ALL SPLICES NOTED SHALL OCCUR AT MIDSPAN. REFER INDIVIDUAL BEAM DETAILS FOR STIRRUP SPACING.

3. THE LAP SPLICES SHOWN SHALL BE PERMITTED IN SPANS MEASURING 6 METERS OR MORE FROM CENTERLINES OF SUPPORTS (COLUMNS OR WALLS) ONLY. SPLICES INDICATED SHALL BE LOCATED ONE METER FROM THE FACE OF THE COLUMN, AS SHOWN.

4. BEAM STEEL NOT SHOWN FOR CLARITY.

UNLESS OTHERWISE NOTED, LINEAR DIMENSIONS SHOWN ARE IN MILLIMETERS.

| STAMPS | DESCRIPTION | DATE | APR |
|---|---|---|---|

DESIGNED BY: TCP
DATE: 11-15-06
DWN BY: TCP
SUBMITTED BY: PHILLIP J. PINELLO CHIEF, PDT FACILITIES DES.
CHK BY: KGO
FILE NO.: AF0607 A-SB08DT

US Army Corps of Engineers
Transatlantic Programs Center

AFGHANISTAN NATIONAL POLICE (ANP) DISTRICT HEADQUARTERS COMPOUNDS - 1 STORY HQ
AFGHANISTAN
1 STORY BUILDING
STANDARD BEAM AND COLUMN DETAIL

SHEET REFERENCE NUMBER:
A
S-8

11/14/2006
h:\projects\afghanistan\af0607\af0607a\str\AF0607A-SB08DT.dwg

## EXHAUST FAN SCHEDULE

| EQUIPT. NO. | LOCATION | AIR QUANTITY CMH | S.P. MM-W.G. | FAN TYPE | ELECTRICAL DATA | | | | CONTROL DIAGRAM | SOUND POWER dBA | REMARKS |
|---|---|---|---|---|---|---|---|---|---|---|---|
| | | | | | W | VOLTS | PH | HZ | | | |
| | TOILETS | 85 | 6 | CEILING CABINET | 49 | 240 | 1 | 50 | E4 | | CEILING MOUNTED WITH GRAVITY BACKDRAFT DAMPER AND CEILING GRILLE |

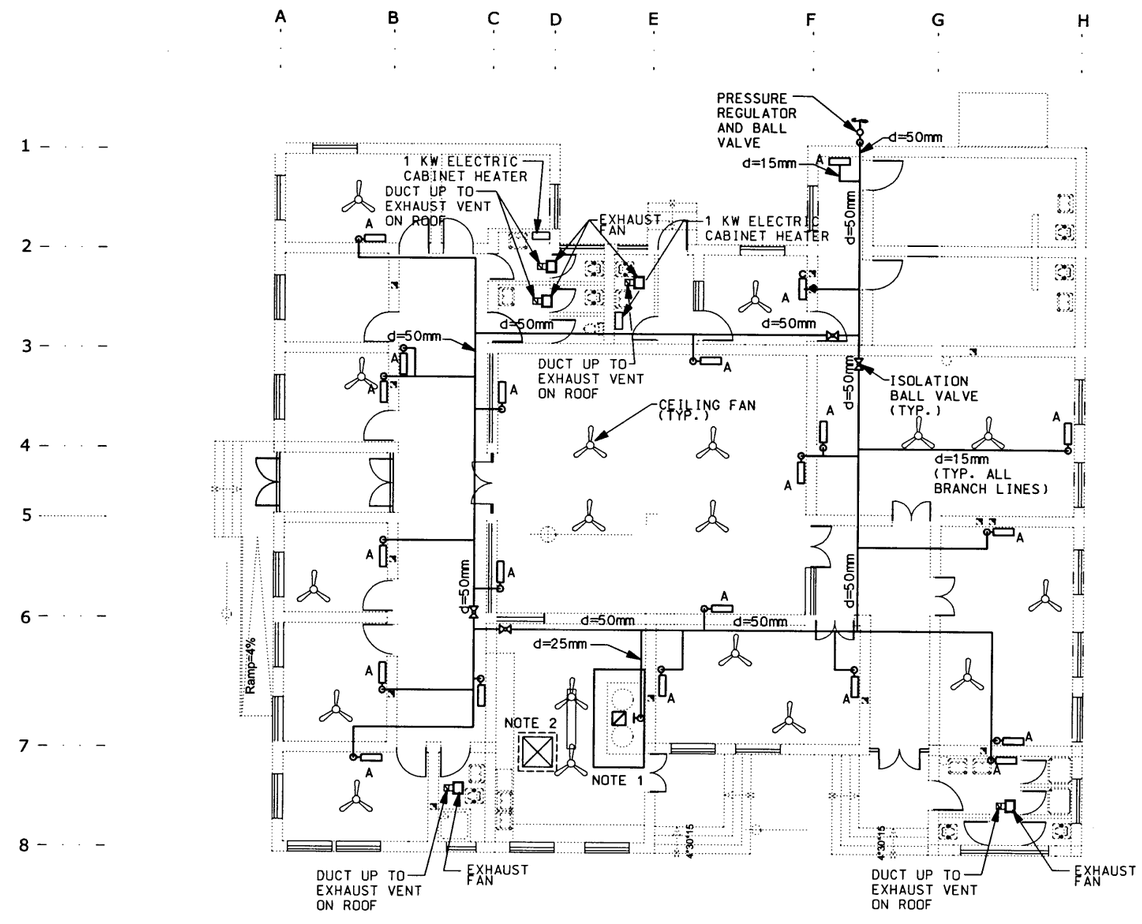


NOTES:

1. KITCHEN EXHAUST HOOD WITH SEALED DUCT CONNECTION TO EXHAUST FAN MOUNTED ON ROOF. SIZE OF HOOD TO BE DETERMINED BY COOKING EQUIPMENT PROVIDED.
2. LOUVERED INTAKE PENTHOUSE WITH FILTER.

A - VENTED PROPANE HEATER 2.93 KW MIN.

## PROPANE SUPPLY SYSTEM PLAN

SCALE 1: 100

1:100

UNLESS OTHERWISE NOTED, LINEAR DIMENSIONS SHOWN ARE IN MILLIMETERS.

| SYMBOL | DESCRIPTION | DATE | APR |
|---|---|---|---|

DESIGNED BY: TWS | DATE: 11-15-06
DWN BY: JMC | SUBMITTED BY: MICHAEL HOWELL CHIEF, PDT BLDG SYSTEMS
CHK BY: MFH | FILE NO.: AF0607 A-MH01PN

US Army Corps of Engineers
Transatlantic Programs Center

AFGHANISTAN NATIONAL POLICE (ANP) DISTRICT HEADQUARTERS COMPOUNDS - 1 STORY HQ
AFGHANISTAN
1 STORY BUILDING
PROPANE SUPPLY SYSTEM PLAN

SHEET REFERENCE NUMBER:
A
M-1

11/14/2006
h:\projects\afghanistan\af0607\af0607a\mec\AF0607A-MH01PN.dwg

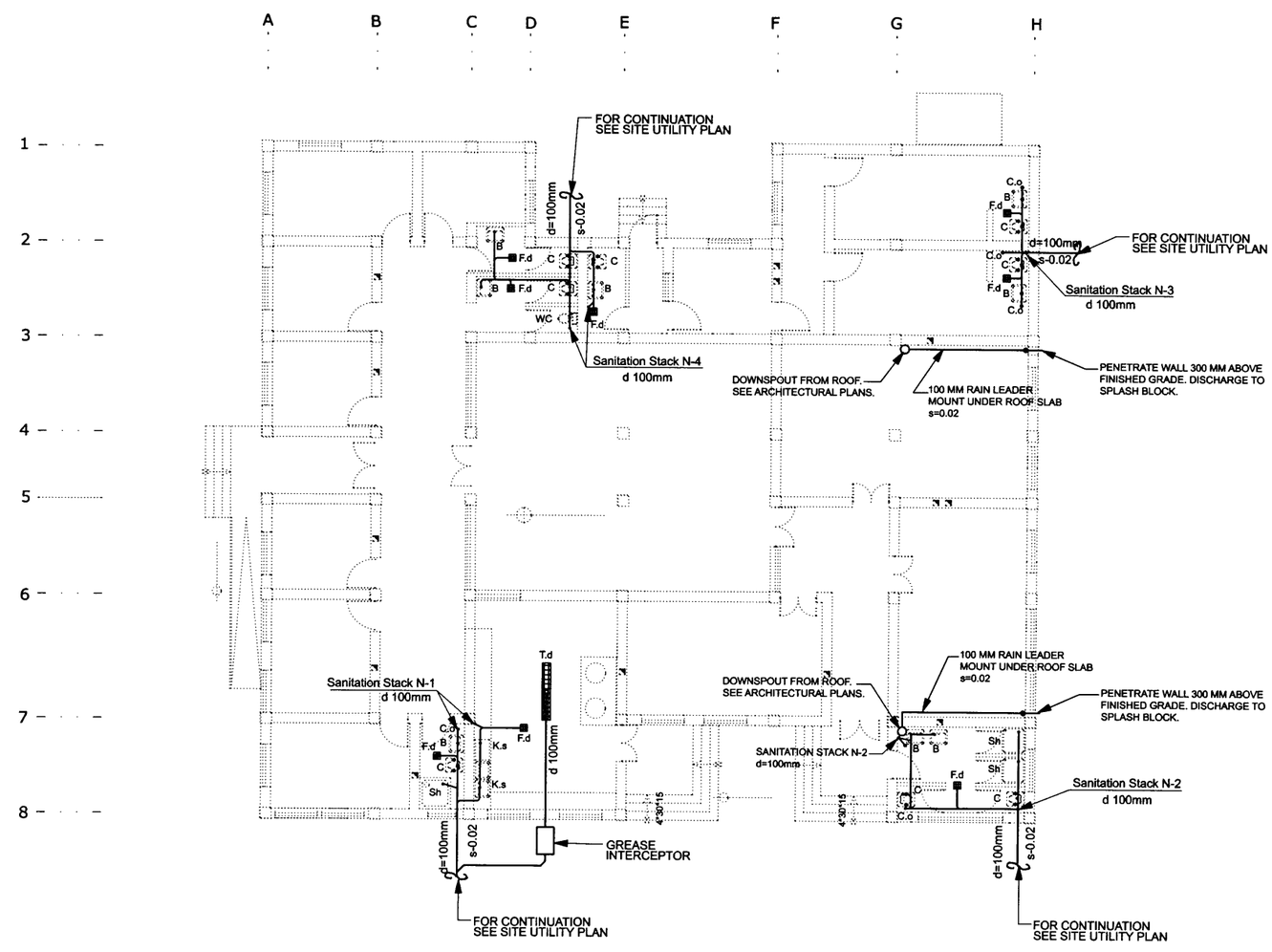


## SANITATION SYSTEM PLAN

SCALE 1: 100

1:100

UNLESS OTHERWISE NOTED, LINEAR DIMENSIONS SHOWN ARE IN MILLIMETERS.

| DESIGNED BY: TWS | DATE: 11-15-06 |
|---|---|
| DWN BY: JMC | SUBMITTED BY: MICHAEL HOWELL CHIEF, PDT BLDG SYSTEMS |
| CHK BY: MFH | FILE NO.: AF0607 A-MP01PN |

US Army Corps of Engineers
Transatlantic Programs Center

AFGHANISTAN NATIONAL POLICE (ANP) DISTRICT HEADQUARTERS COMPOUNDS - 1 STORY HQ
AFGHANISTAN
1 STORY BUILDING
SANITATION SYSTEM PLAN

SHEET REFERENCE NUMBER:
A
P-1

11/14/2006
h:\projects\afghanistan\af0607\af0607a\mec\AF0607A-MP01PN.DWG

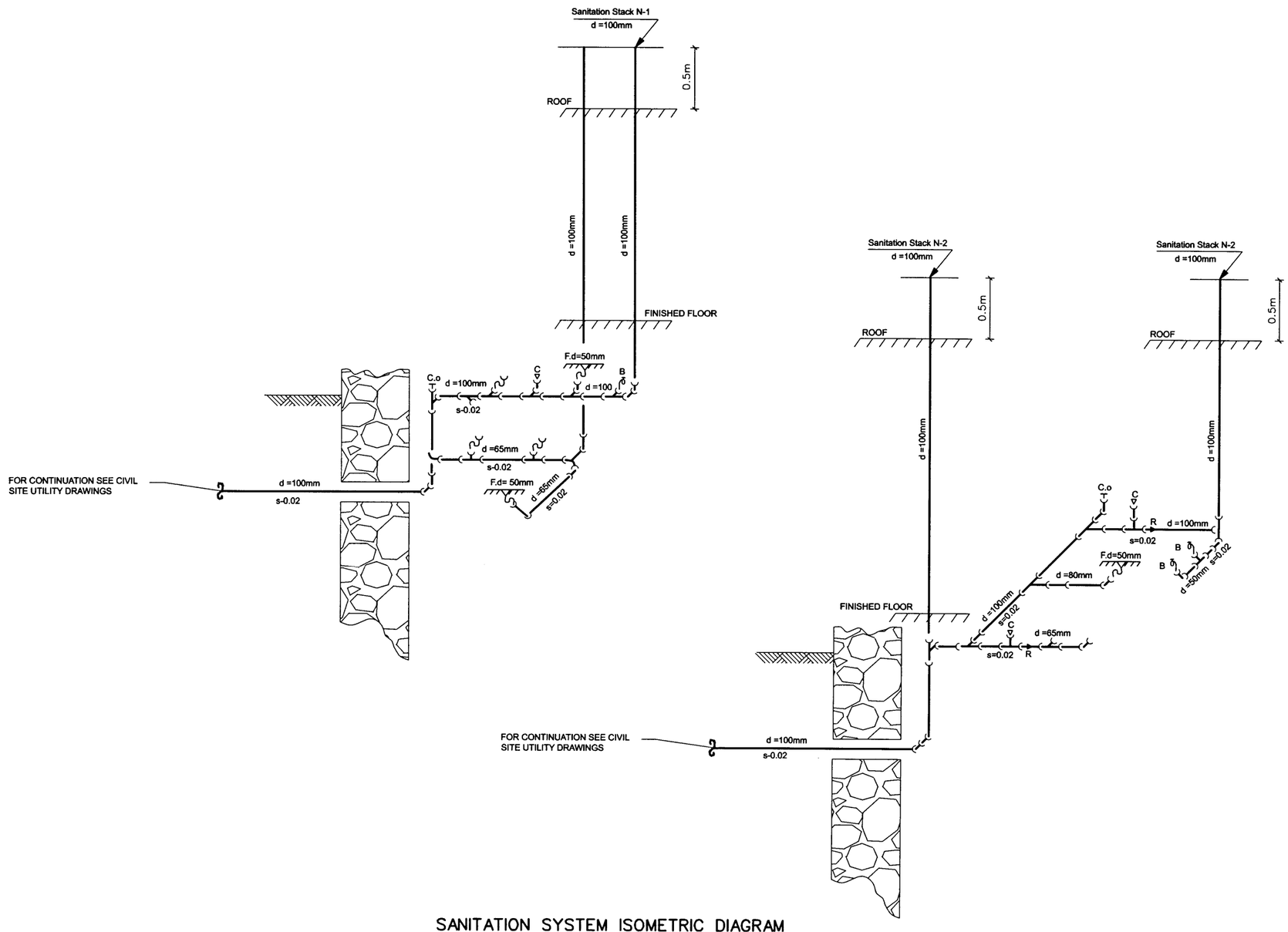


## SANITATION SYSTEM ISOMETRIC DIAGRAM

NOT TO SCALE

UNLESS OTHERWISE NOTED, LINEAR DIMENSIONS SHOWN ARE IN MILLIMETERS.

| SYMBOL | DESCRIPTION | DATE | APP |
|---|---|---|---|

DESIGNED BY: TWS
DATE: 11-15-06
DWN BY: JMC
SUBMITTED BY: MICHAEL HOWELL CHIEF, PDT BLDG SYSTEMS
CHK BY: MFH
FILE NO.: AF0607 A-MP02DI

US Army Corps of Engineers
Transatlantic Programs Center

AFGHANISTAN NATIONAL POLICE (ANP) DISTRICT HEADQUARTERS COMPOUNDS - 1 STORY HQ
AFGHANISTAN
1 STORY BUILDING
SANITATION SYSTEM ISOMETRIC DIAGRAM

SHEET REFERENCE NUMBER:
A
P-2

11/14/2006
h:\projects\afghanistan\af0607\af0607a\mec\AF0607A-MP02DI.DWG

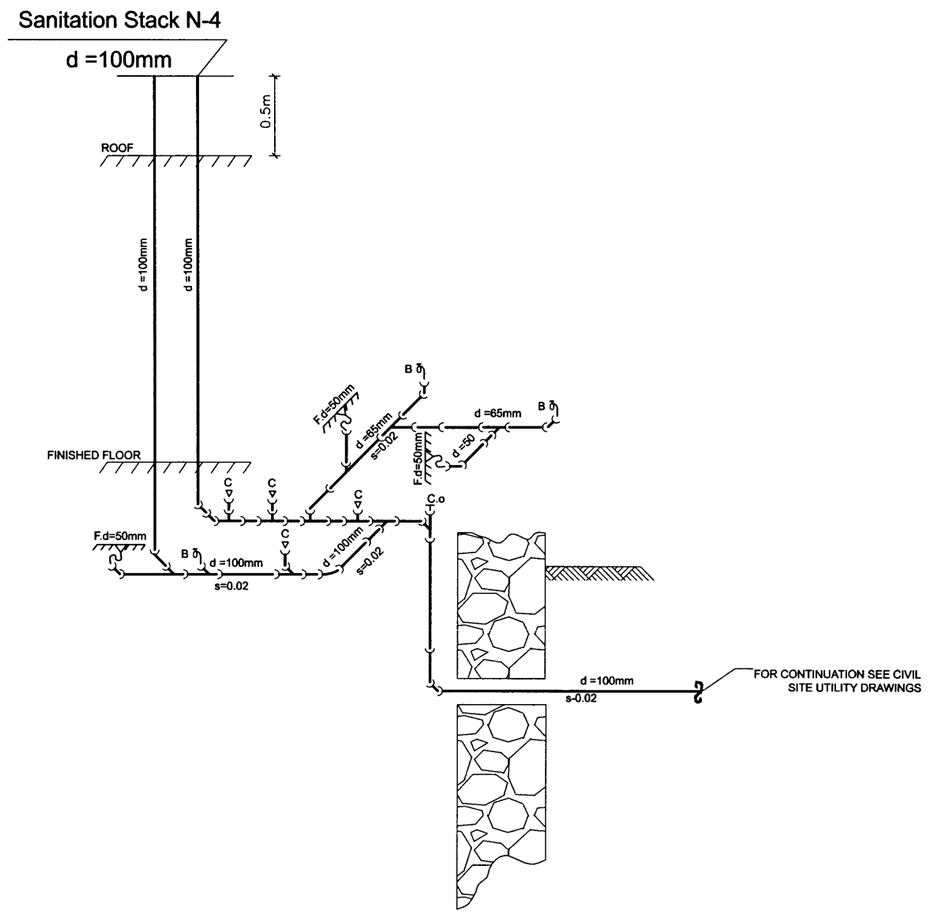


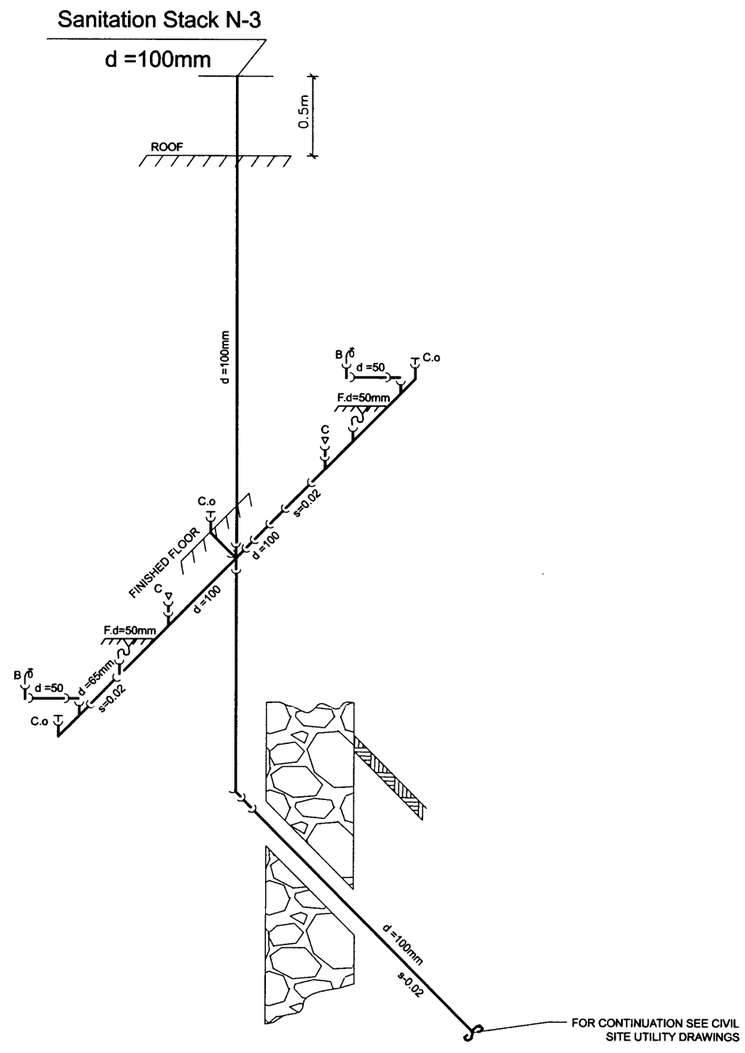


## SANITATION SYSTEM ISOMETRIC DIAGRAM

NOT TO SCALE

UNLESS OTHERWISE NOTED, LINEAR DIMENSIONS SHOWN ARE IN MILLIMETERS.

| | | | |
|---|---|---|---|
| DESIGNED BY: TWS | DATE: 11-15-06 | | |
| DWN BY: JMC | SUBMITTED BY: MICHAEL HOWELL CHIEF, PDT BLDG SYSTEMS | | |
| CHK BY: MFH | FILE NO.: AF0607 A-MP03DI | | |

US Army Corps of Engineers
Transatlantic Programs Center

AFGHANISTAN NATIONAL POLICE (ANP) DISTRICT HEADQUARTERS COMPOUNDS - 1 STORY HQ
AFGHANISTAN
1 STORY BUILDING
SANITATION SYSTEM ISOMETRIC DIAGRAM

SHEET REFERENCE NUMBER:
A
P-3

11/14/2006
h:\projects\afghanistan\af0607\af0607a\mec\AF0607A-MP03DI.DWG

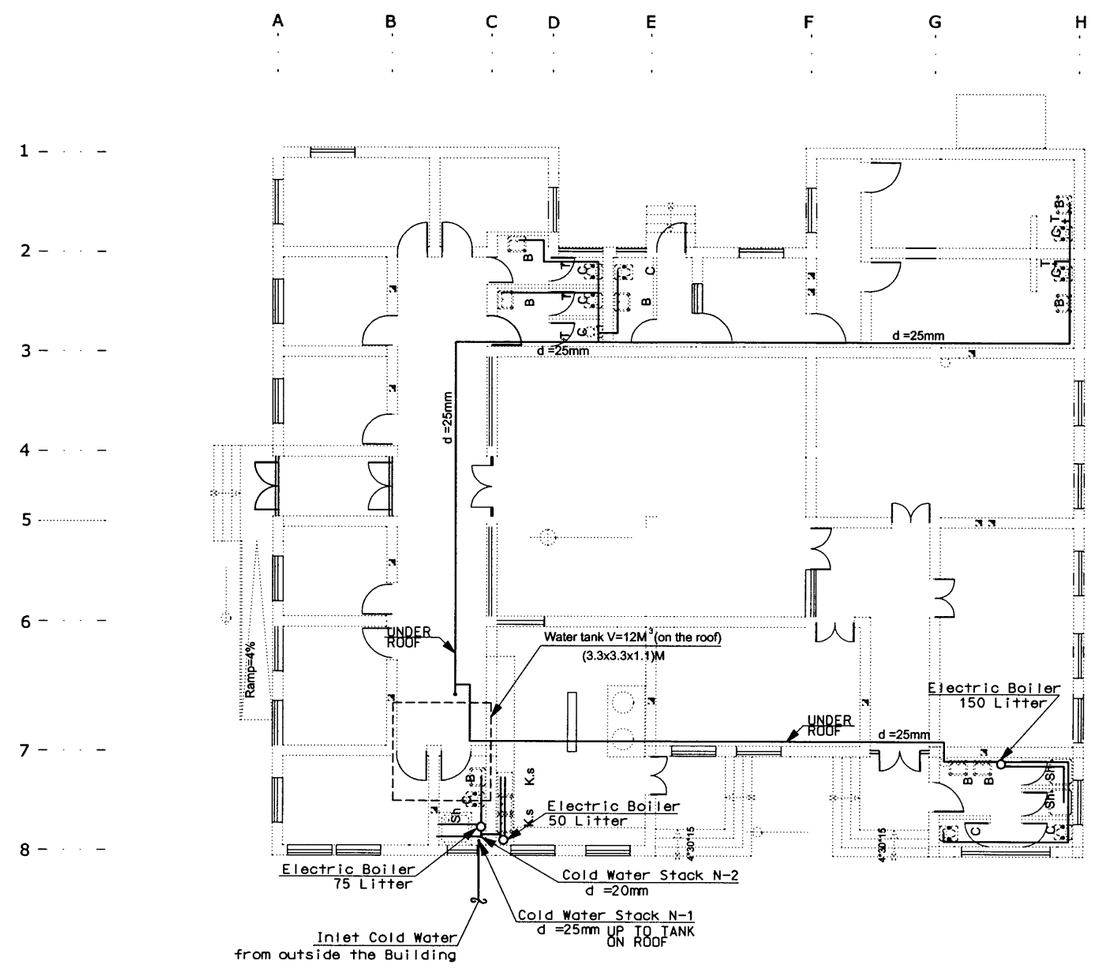


## WATER SUPPLY SYSTEM PLAN

SCALE 1: 100

1:100

UNLESS OTHERWISE NOTED, LINEAR DIMENSIONS SHOWN ARE IN MILLIMETERS.

| SYMBOL | DESCRIPTION | DATE | APP'D |
|---|---|---|---|

DESIGNED BY: TWS
DATE: 11-15-06
DWN BY: JMC
SUBMITTED BY: MICHAEL HOWELL CHIEF, PDT BLDG SYSTEMS
CHK BY: MFH
FILE NO.: AF0607A-MW01PN

US Army Corps of Engineers
Transatlantic Programs Center

AFGHANISTAN NATIONAL POLICE (ANP) DISTRICT HEADQUARTERS COMPOUNDS - 1 STORY HQ
AFGHANISTAN
1 STORY BUILDING
WATER SUPPLY SYSTEM PLAN

SHEET REFERENCE NUMBER:
A
W-1

11/14/2006
h:\projects\afghanistan\af0607\af0607a\mec\AF0607A-MW01PN.DWG

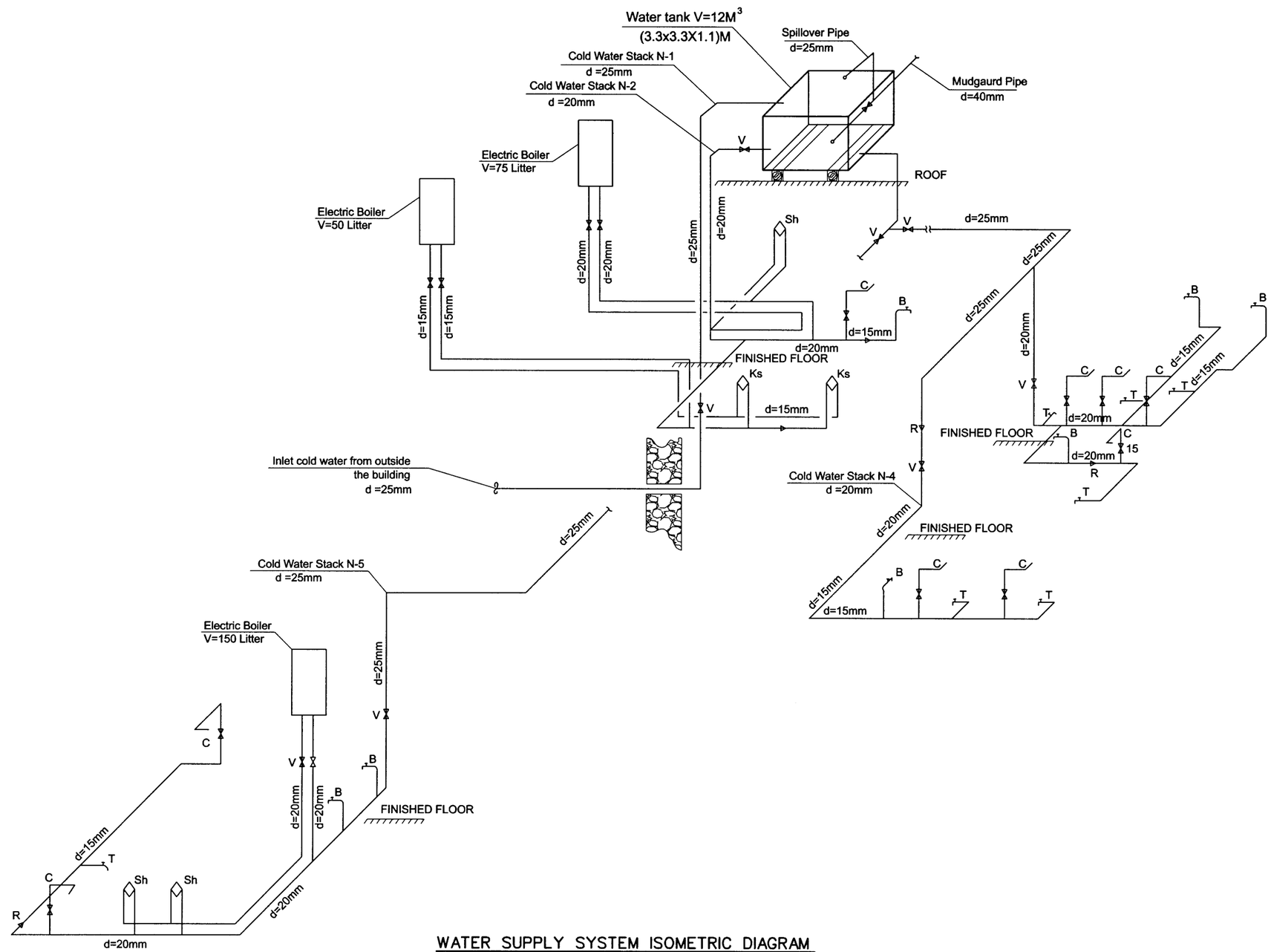


## WATER SUPPLY SYSTEM ISOMETRIC DIAGRAM

NOT TO SCALE

UNLESS OTHERWISE NOTED, LINEAR DIMENSIONS SHOWN ARE IN MILLIMETERS.

| SYMBOL | DESCRIPTION | DATE | APP |
|---|---|---|---|

DESIGNED BY: TWS | DATE: 11-15-06
DWN BY: JMC | SUBMITTED BY: MICHAEL HOWELL CHIEF, PDT BLDG SYSTEMS
CHK BY: MFH | FILE NO.: AF0607 A-MW02DI

US Army Corps of Engineers
Transatlantic Programs Center

AFGHANISTAN NATIONAL POLICE (ANP) DISTRICT HEADQUARTERS COMPOUNDS - 1 STORY HQ
AFGHANISTAN
1 STORY BUILDING
WATER SUPPLY SYSTEM
ISOMETRIC DIAGRAM

SHEET REFERENCE NUMBER:
A
W-2

11/14/2006
h:\projects\afghanistan\af0607\af0607a\mec\AF0607A-MW02DI.DWG

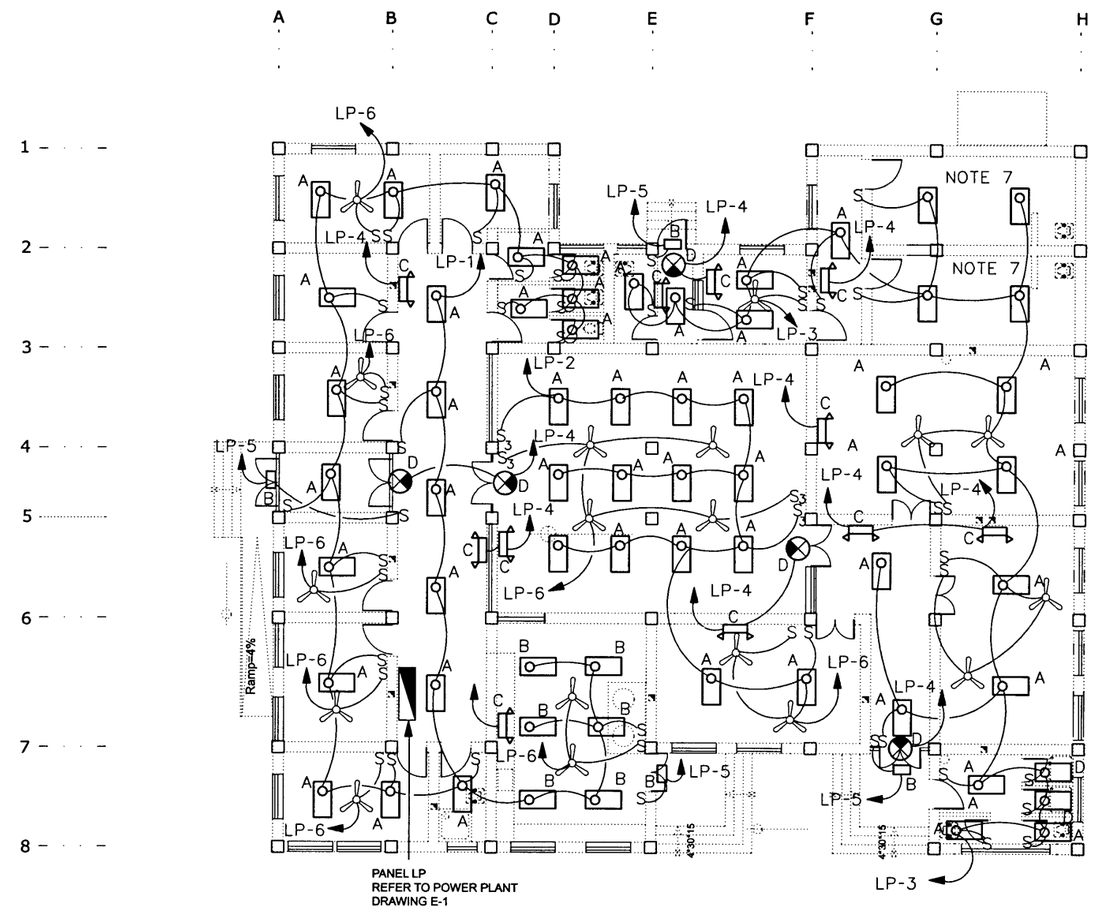


NOTES:

1. FOR LEGEND AND ABBREVIATIONS SEE DRAWING SE-1.

2. EXIT LIGHTS, NIGHT LIGHTS AND EMERGENCY LIGHTS SHALL BE CONNECTED AHEAD OF LIGHT SWITCH.

3. FOR LIGHT FIXTURE SCHEDULE SEE DRAWING SE-2.

4. COORDINATE LOCATION OF ALL ELECTRICAL FIXTURES AND EQUIPMENT WITH ALL OTHER TRADES.

5. FOR ONE LINE DIAGRAM SEE DRAWING E- I, POWER PLANT.

6. ALL LIGHT FIXTURES IN JAIL CELLS SHALL BE TWO LAMP FLUORESCENT TYPE FIXTURES SUITABLE FOR VANDAL RESISTANCE/ DETENTION CENTER. LIGHT FIXTURES SHALL WITHSTAND THE PHYSICAL ABUSE AND THE INTENT- TO- DESTROY TYPE ABUSE.

7. ALL WIRING SHALL BE SURFACE MOUNTED IN METAL CONDUIT.

8. COORDINATE LOCATION OF THE CEILING FANS WITH LIGHT FIXTURES.

9. EXHUAST FANS SHALL BE CONTROLLED BY LIGHT SWITCH IN ITS RESPECTIVE ROOM.

## LIGHTING PLAN
SCALE 1: 100

1 0 1 2 3 4 5 6 7 8 9
1:100

UNLESS OTHERWISE NOTED, LINEAR DIMENSIONS SHOWN ARE IN MILLIMETERS.

| SYMBOL | DESCRIPTION | DATE | APP |
|---|---|---|---|

DESIGNED BY: MM | DATE: 11-15-06
DWN BY: MM | SUBMITTED BY: MICHAEL HOWELL CHIEF, PDT BLDG SYSTEMS
CHK BY: MFH | FILE NO.: AF0607 A-ELOIPN

US Army Corps of Engineers
Transatlantic Programs Center

AFGHANISTAN NATIONAL POLICE (ANP) DISTRICT HEADQUARTERS COMPOUNDS - 1 STORY HQ
AFGHANISTAN
1 STORY BUILDING
LIGHTING PLAN

SHEET REFERENCE NUMBER:
A
E-1

11/14/2006
h:\projects\afghanistan\af0607\af0607a\ele\AF0607A-ELOIPN.dwg

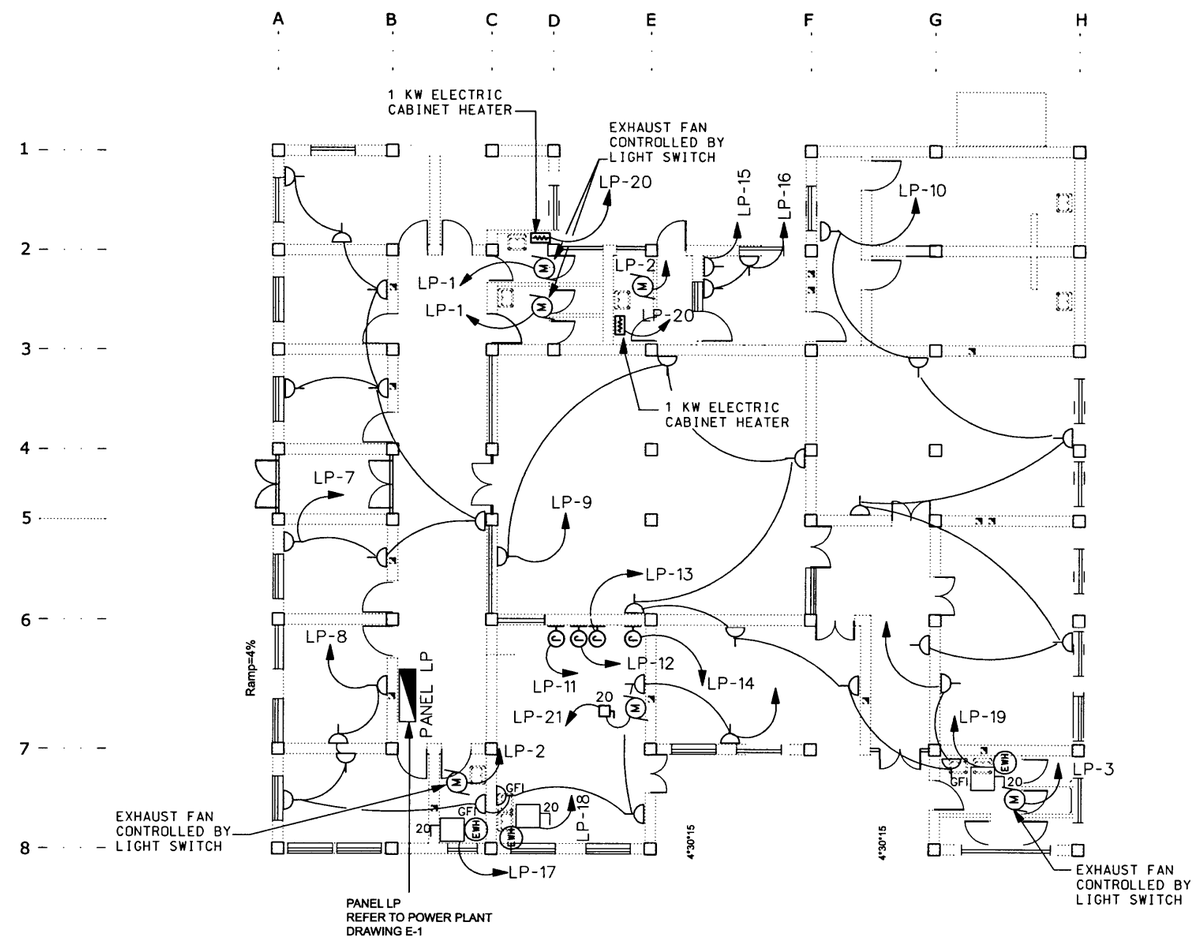


NOTES:

1. FOR LEGEND AND ABBREVIATIONS SEE DRAWING SE-1.

2.COORDINATE LOCATION OF ALL ELECTRICAL FIXTURES AND EQUIPMENT WITH ALL OTHER TRADES.

3. FOR ONE LINE DIAGRAM SEE DRAWING E- 1, POWER PLANT.

4. ALL WIRING SHALL BE SURFACE MOUNTED IN METAL CONDUIT.

5. FOR EXACT LOCATION OF MECHANICAL EQUIPMENT SEE MECHANICAL DRAWINGS.

6. EXHAUST FANS SHALL BE CONTROLLED BY LIGHT SWITCH IN ITS RESPECTIVE ROOM.

## POWER PLAN

SCALE 1: 100

1 0 1 2 3 4 5 6 7 8 9
1:100

UNLESS OTHERWISE NOTED, LINEAR DIMENSIONS SHOWN ARE IN MILLIMETERS.

| SYMBOL | DESCRIPTION | DATE | APP'D |
|---|---|---|---|

DESIGNED BY: MM
DATE: 11-15-06
DWN BY: MM
SUBMITTED BY: MICHAEL HOWELL CHIEF, PDT BLDG SYSTEMS
CHK BY: MFH
FILE NO.: AF0607 A-EP02PN

US Army Corps of Engineers
Transatlantic Programs Center

AFGHANISTAN NATIONAL POLICE (ANP) DISTRICT HEADQUARTERS COMPOUNDS - 1 STORY HQ
AFGHANISTAN
1 STORY BUILDING
POWER PLAN

SHEET REFERENCE NUMBER:
A
E-2

11/14/2006
h:\projects\afghanistan\af0607\af0607a\ele\AF0607A-EP02PN.DWG

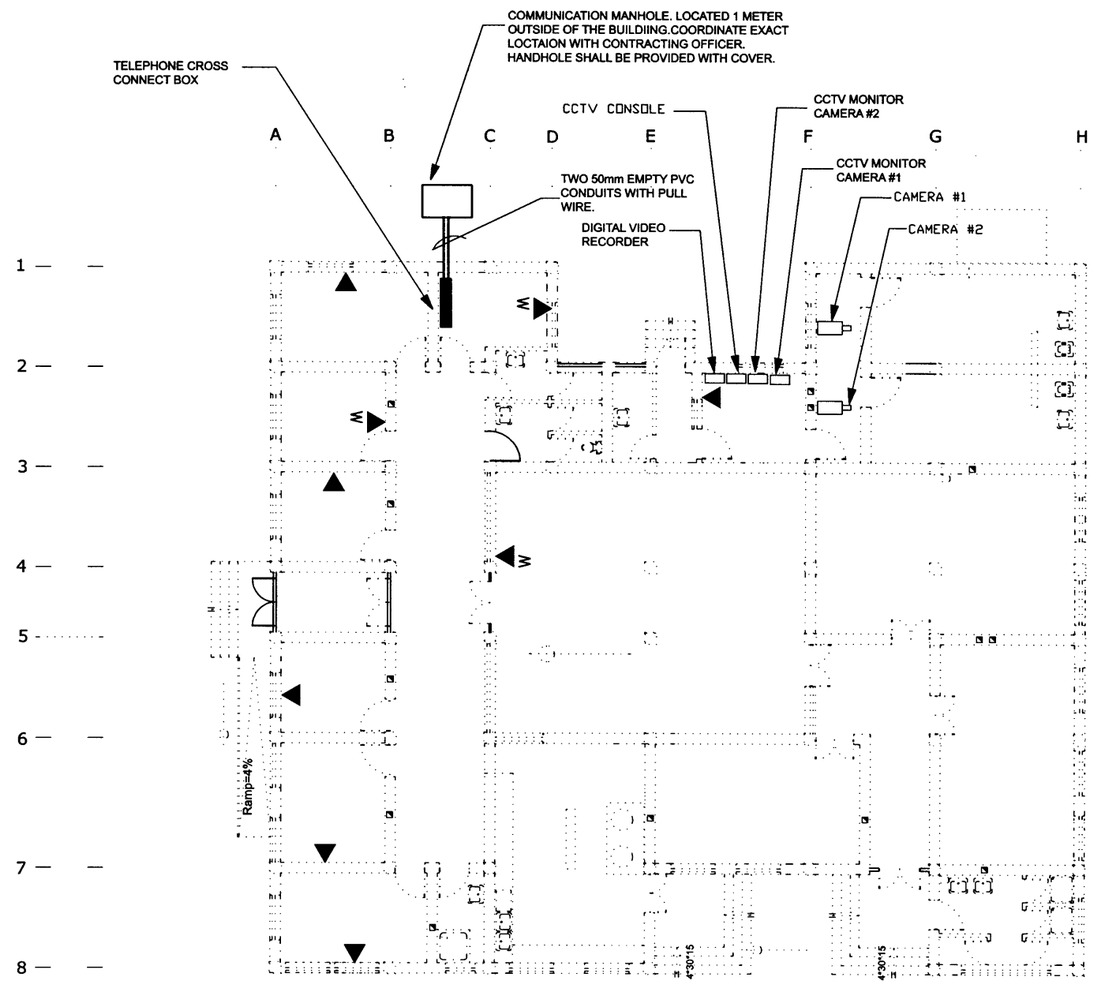


NOTES:

1. FOR LEGEND AND ABBREVIATIONS SEE DRAWING SE-1.
2. COORDINATE LOCATION OF ALL COMMUNICATION FIXTURES AND EQUIPMENT WITH ALL OTHER TRADES.
3. ALL EMPTY CONDUITS SHALL BE PROVIDED WITH PULL WIRES.
4. FOR TELEPHONE RISER DIAGRAM AND CCTV RISER DIAGRAM SEE DRAWING E-4.
5. CCTV WIRING SHALL BE SURFACE MOUNTED IN METAL CONDUIT.
6. TELEPHONE RACEWAY SYSTEM SHALL BE METAL CONDUIT. WIRING SHALL BE BY OTHERS.

## COMMUNICATION PLAN

SCALE 1: 100

1 0 1 2 3 4 5 6 7 8 9
1:100

UNLESS OTHERWISE NOTED, LINEAR DIMENSIONS SHOWN ARE IN MILLIMETERS.

| SYMBOL | DESCRIPTION | DATE | APR |
|---|---|---|---|

DESIGNED BY: MM
DATE: 11-15-06
DWN BY: MM
SUBMITTED BY: MICHAEL HOWELL, CHIEF, PDT BLDG SYSTEMS
CHK BY: MFH
FILE NO.: AF0607 A-ECO3PN

US Army Corps of Engineers
Transatlantic Programs Center

AFGHANISTAN NATIONAL POLICE (ANP) DISTRICT HEADQUARTERS COMPOUNDS - 1 STORY HQ
AFGHANISTAN
1 STORY BUILDING
COMMUNICATIONS PLAN

SHEET REFERENCE NUMBER:
A
E-3

11/14/2006
H:\Projects\Afghanistan\af0607\af0607a\ele\AF0607A-ECO3PN.DWG

PANELBOARD LP FLUSH MOUNTED MINIMUM 22,000 ASYM. A.I.C. MIN.

_____ AMP. MAIN LUGS (OR) 100 AMP. MAIN BREAKER W/ 100 AMP. TRIP

CIRCUIT BREAKER TYPE 380/220 VOLTS 3 PHASE 4 WIRE 100 AMP. BUS 50 HZ

| CKT. NO. | TRIP AMPS | NO. POLES | WIRE MM2 | GND MM2 | CONDUIT MM | LOAD SERVED | LOAD-V.A. AØ | LOAD-V.A. BØ | LOAD-V.A. CØ | LOAD-V.A. AØ | LOAD-V.A. BØ | LOAD-V.A. CØ | LOAD SERVED | CONDUIT MM | GND MM2 | WIRE MM2 | NO. POLES | TRIP AMPS | CKT. NO. |
|---|---|---|---|---|---|---|---|---|---|---|---|---|---|---|---|---|---|---|---|
| 1 | 20 | 1 | 4 | 4 | 20 | LIGHTING & EF | 3300 | | | 3300 | | | LIGHTING & EXHAUST FAN | 20 | 4 | 4 | 1 | 15 | 2 |
| 3 | 20 | 1 | 4 | 4 | 20 | LGHT.EF.CEILING FAN | | 3300 | | | 700 | | EXIT AND EMERGENCY LIGHTING | 20 | 4 | 4 | 1 | 20 | 4 |
| 5 | 20 | 1 | 4 | 4 | 20 | EXTERIOR LIGHTING | | | 500 | | | 3300 | CEILING FANS | 20 | 4 | 4 | 1 | 20 | 6 |
| 7 | 20 | 1 | 4 | 4 | 20 | RECEPTACLES | 1440 | | | 1440 | | | RECEPTACLES | 20 | 4 | 4 | 1 | 20 | 8 |
| 9 | 20 | 1 | 4 | 4 | 20 | RECEPTACLES | | 1440 | | | 1080 | | RECEPTACLES | 20 | 4 | 4 | 1 | 20 | 10 |
| 11 | 20 | 1 | 4 | 4 | 20 | JB FOR REFRIGERATOR/FREEZER | | | 2000 | | | 2000 | JB FOR REFRIGERATOR/FREEZER | 20 | 4 | 4 | 1 | 20 | 12 |
| 13 | 20 | 1 | 4 | 4 | 20 | JB FOR REFRIGERATOR/FREEZER | 2000 | | | 2000 | | | JB FOR REFRIGERATOR/FREEZER | 20 | 4 | 4 | 1 | 20 | 14 |
| 15 | 20 | 1 | 4 | 4 | 20 | RECEPTACLES CCTV CONSOLE | | 720 | | | 360 | | RECEPTACLES | 20 | 4 | 4 | 1 | 20 | 16 |
| 17 | 20 | 1 | 4 | 4 | 20 | ELECTRIC WATER HEATER | | | 4500 | | | 4500 | ELECTRIC WATER HEATER | 20 | 4 | 4 | 1 | 20 | 18 |
| 19 | 20 | 1 | 4 | 4 | 20 | ELECTRIC WATER HEATER | 4500 | | | 2000 | | | ELECTRIC CABINET HEATERS | 20 | 4 | 4 | 1 | 20 | 20 |
| 21 | 20 | 3 | 4 | 4 | 20 | KITCHEN EXHAUST FAN 1 HP | | 483 | | | 3000 | | SPARE | | | | 1 | 20 | 22 |
| 23 | | | | | | | | | 483 | | | 3000 | SPARE | | | | 1 | 20 | 24 |
| 25 | | | | | | | 483 | | | 3000 | | | SPARE | | | | 1 | 20 | 26 |
| 27 | 20 | 1 | | | | SPARE | | 3000 | | | | | SPACE | | | | | | 28 |
| 29 | 20 | 1 | | | | SPARE | | | 3000 | | | | SPACE | | | | | | 30 |
| 31 | | | | | | SPACE | | | | | | | SPACE | | | | | | 32 |
| 33 | | | | | | SPACE | | | | | | | SPACE | | | | | | 34 |
| 35 | | | | | | SPACE | | | | | | | SPACE | | | | | | 36 |
| 37 | | | | | | SPACE | | | | | | | SPACE | | | | | | 38 |
| 39 | | | | | | SPACE | | | | | | | SPACE | | | | | | 40 |
| 41 | | | | | | SPACE | | | | | | | SPACE | | | | | | 42 |
| | | | | | | | 11723 | 8943 | 8233 | 7740 | 5140 | 13000 | | | | | | | |

TOTAL CONN. LOAD 54.77 KVA. 60 % DEMAND = ESTIMATED DEMAND LOAD: 32.86 KVA

TOTAL CONN. LOAD PER PHASE (KVA): AØ 19.46 BØ 14.08 CØ 21.23

SUPPLIED FROM POWER PLANT SWITCHBOARD

NOTES:

1. FOR LEGEND AND ABBREVIATIONS SEE DRAWING E-6.

2. CONTRACTOR SHALL CONFIRM THAT ALL CIRCUIT RATINGS ARE BASED ON THE ACTUAL NAMEPLATE OF THE SUPPLIED EQUIPMENT.

3. CABLING FOR CCTV SYSTEM SHALL BE PER MANUFACTURER'S RECOMMENDATION.

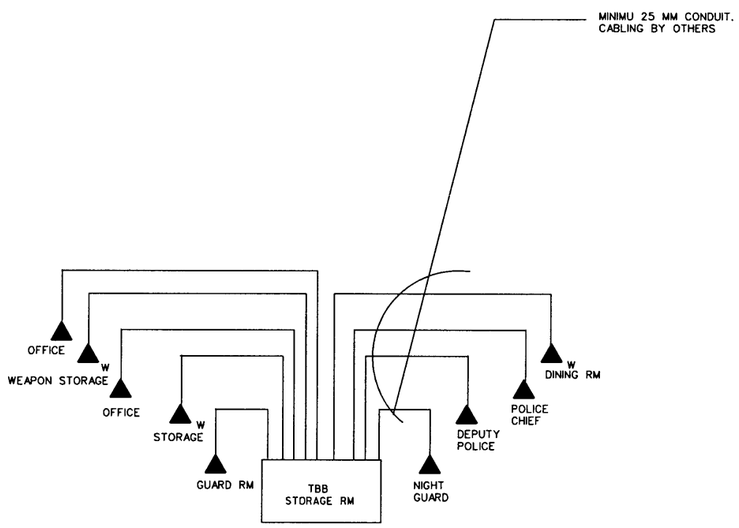


TELEPHONE RISER DIAGRAM

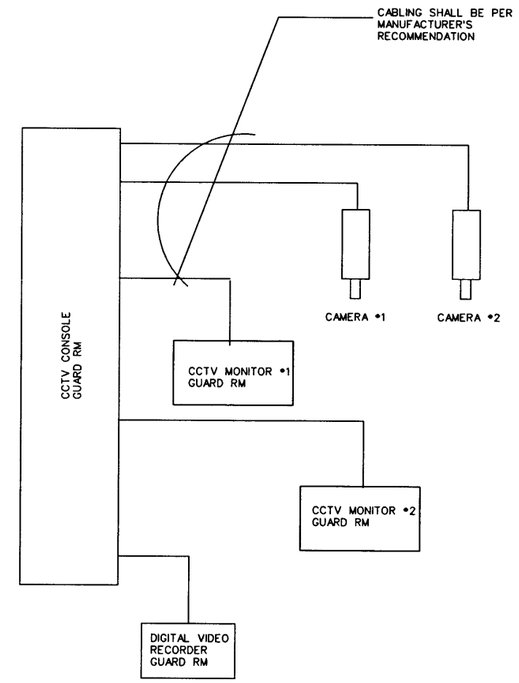


CCTV RISER DIAGRAM

UNLESS OTHERWISE NOTED, LINEAR DIMENSIONS SHOWN ARE IN MILLIMETERS.

| SYMBOL | DESCRIPTION | DATE | APP |
|---|---|---|---|

DESIGNED BY: MM DATE: 11-15-06
DWN BY: MM SUBMITTED BY: MICHAEL HOWELL CHIEF, PDT BLDG SYSTEMS
CHK BY: MFH FILE NO.: AF0607 A-EL04SC

US Army Corps of Engineers
Transatlantic Programs Center

AFGHANISTAN NATIONAL POLICE (ANP) DISTRICT HEADQUARTERS COMPOUNDS - 1 STORY HQ
AFGHANISTAN
1 STORY BUILDING
PANEL SCHEDULE

SHEET REFERENCE NUMBER:
A
E-4

11/14/2006
h:\projects\afghanistan\af0607\af0607a\ele\AF0607A-EL04SC.DWG

NOTES:

1. FOR LEGEND AND ABBREVIATIONS SEE DRAWING SE-1.
2. ALL CONNECTION SHALL BE EXOTHERMIC.

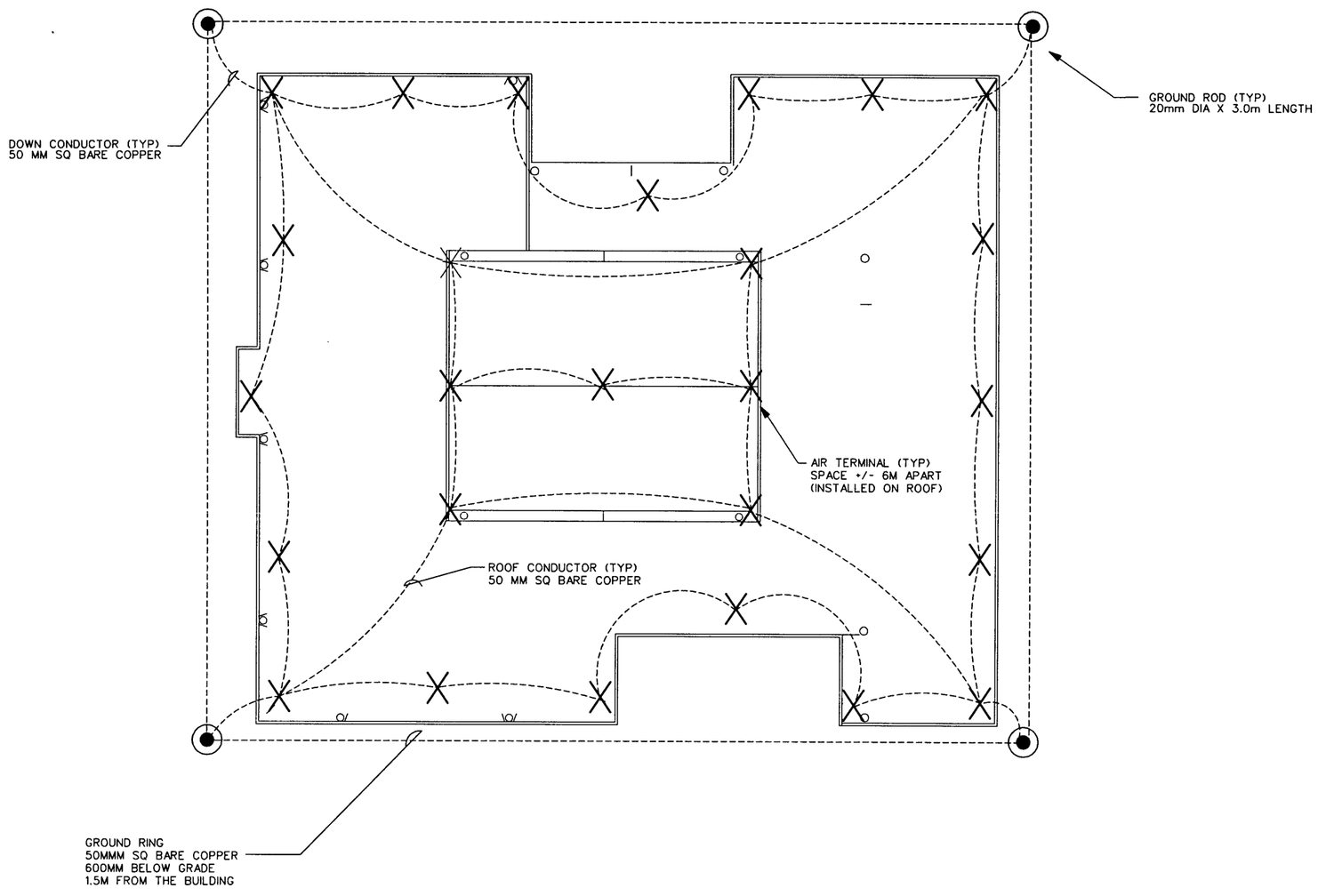


## LIGHTNING PROTECTION PLAN

SCALE 1: 100

1 0 1 2 3 4 5 6 7 8 9
1:100

UNLESS OTHERWISE NOTED, LINEAR DIMENSIONS SHOWN ARE IN MILLIMETERS.

| SYMBOL | DESCRIPTION | DATE | APP'D |
|---|---|---|---|

DESIGNED BY: MM
DATE: 11-15-06
DWN BY: MM
SUBMITTED BY: MICHAEL HOWELL CHIEF, PDT BLDG SYSTEMS
CHK BY: MFH
FILE NO.: AF0607 A-EP05PN

US Army Corps of Engineers
Transatlantic Programs Center

AFGHANISTAN NATIONAL POLICE (ANP) DISTRICT HEADQUARTERS COMPOUNDS - 1 STORY HQ
AFGHANISTAN
1 STORY BUILDING
LIGHTNING PROTECTION PLAN

SHEET REFERENCE NUMBER:
A
E-5

11/14/2006
h:\projects\afghanistan\af0607\af0607a\ele\AF0607A-EP05PN.DWG

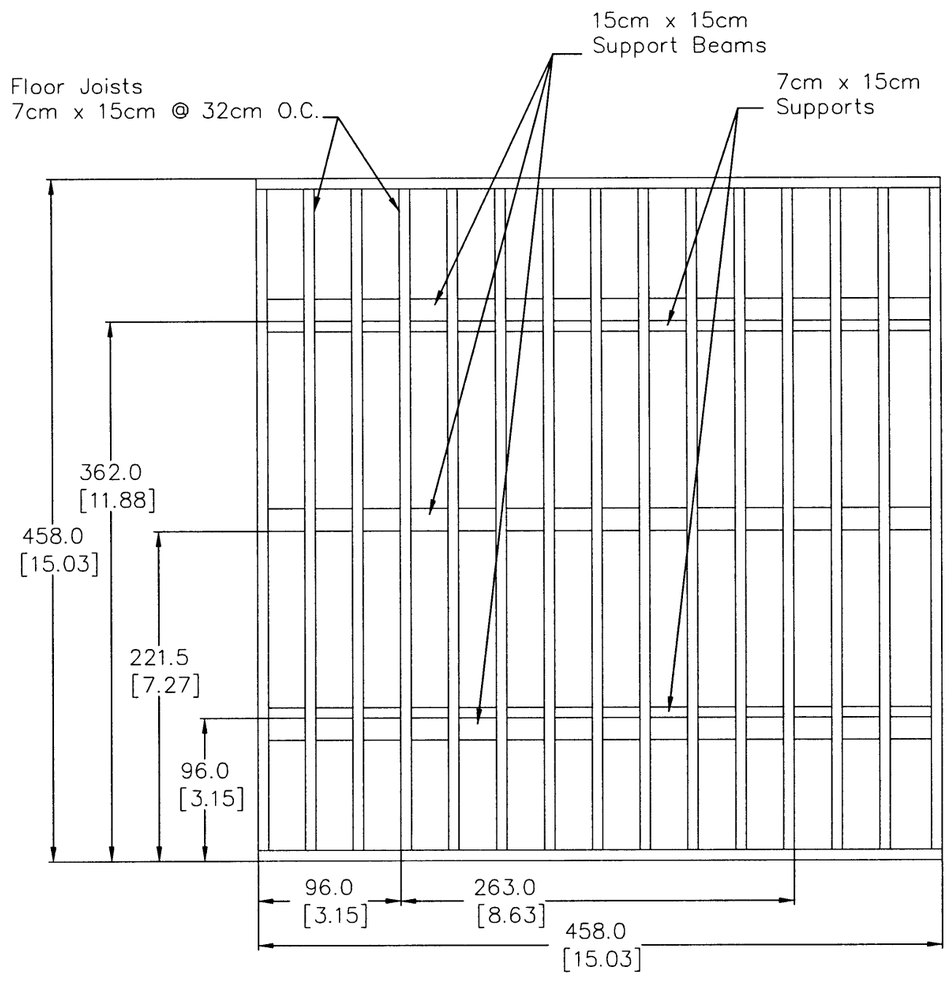


## Floor Framing Plan

(**no** scale)

Centimeters

[Feet]

UNLESS OTHERWISE NOTED, LINEAR DIMENSIONS SHOWN ARE IN MILLIMETERS.

| SYMBOL | DESCRIPTION | DATE | APR. |
|---|---|---|---|

DESIGNED BY: AED
DATE: 11-15-06
DWN BY: AED
SUBMITTED BY: PHILIP J. PINELLO
CHIEF, PDT PACIFICS DEV.
CHK BY: ABB
FILE NO.: AF0607 B-AR01PN

US Army Corps of Engineers
Transatlantic Programs Center

AFGHANISTAN NATIONAL POLICE (ANP) DISTRICT HEADQUARTERS COMPOUNDS - 1 STORY HQ
AFGHANISTAN
GUARD TOWERS
FRAMING PLAN

SHEET REFERENCE NUMBER:
B
A-1

11/14/2006
h:\projects\afghanistan\af0607\af0607b\arc\AR0607B-AR01PN.dwg

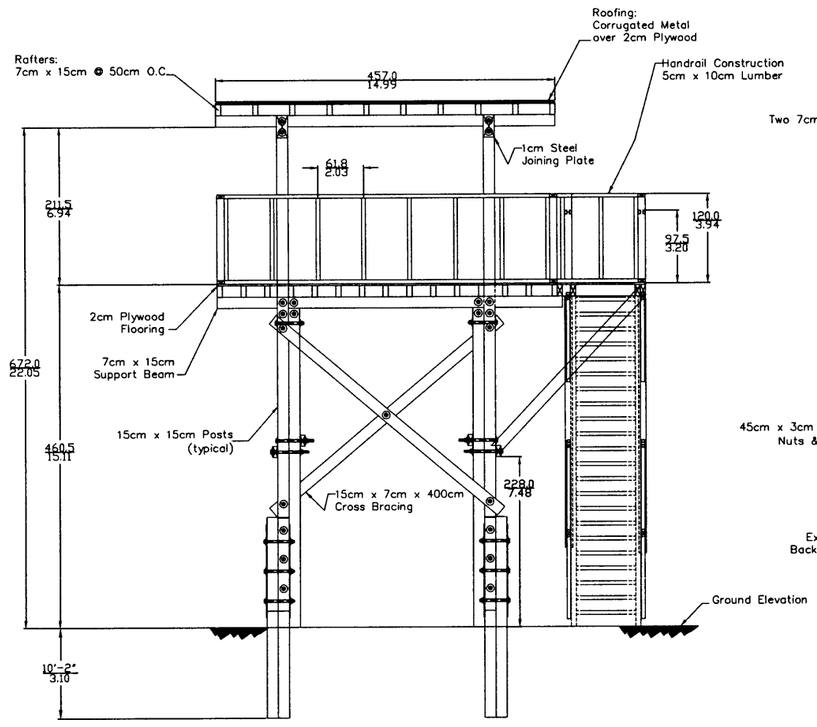


**Stairs, Railing & Supports**
**Elevation View**

Scale: 1:200

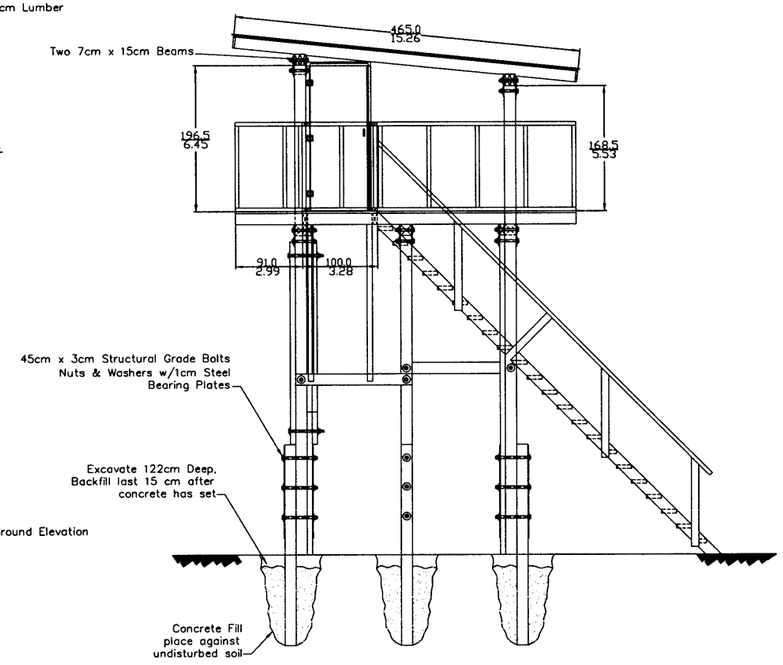


**Side View**
(components omitted for clarity)

Scale: 1:200

Centimeters
[Feet]

5 0 5 10 15
1:200

UNLESS OTHERWISE NOTED, LINEAR DIMENSIONS SHOWN ARE IN MILLIMETERS.

| SYMBOL | DESCRIPTION | DATE | APR |
|---|---|---|---|

DESIGNED BY: AED
DWN BY: AED
CHK BY: ABB
DATE: 11-15-06
SUBMITTED BY: PHILLIP A. PANELLO
CHIEF, DIV. FACILITIES DES.
FILE NO.: AF0607 B-AR02EL

US Army Corps of Engineers
Transatlantic Programs Center

AFGHANISTAN NATIONAL POLICE (ANP) DISTRICT HEADQUARTERS COMPOUNDS - 1 STORY HQ
AFGHANISTAN
GUARD TOWERS
ELEVATIONS

SHEET REFERENCE NUMBER:
B
A-2

11/14/2006
h:\projects\afghanistan\af0607\af0607b\arc\AR0607B-AR02EL.dwg

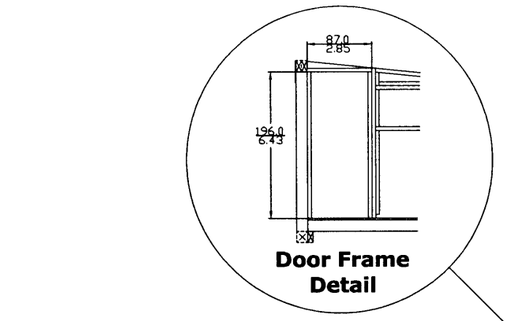


**Notes:**

1. Use structural grade (A325) bolts, nuts, washers and lockwashers.

Centimeters
[Feet]

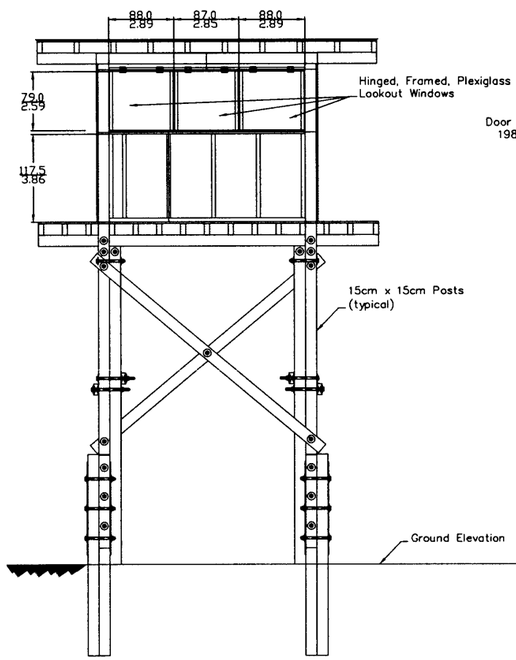


**Wall Framing Elevation View**
(Components omitted for clarity)
Scale: 1:200

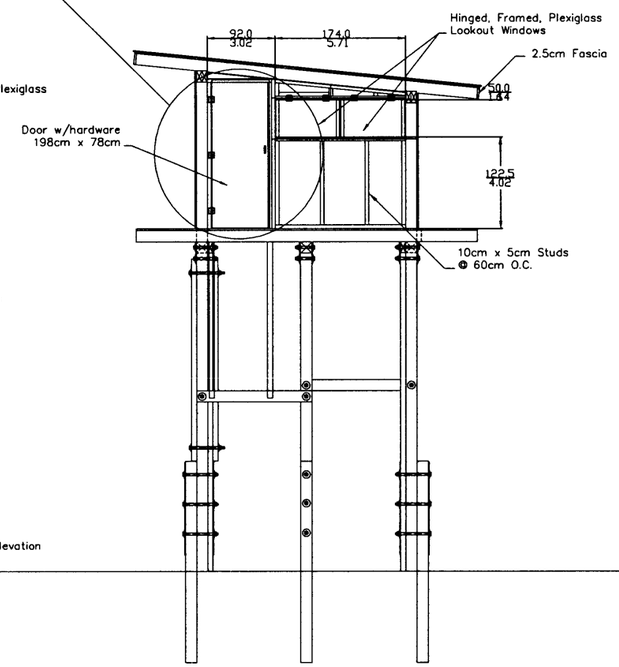


**Side View**
(components omitted for clarity)
Scale: 1:200

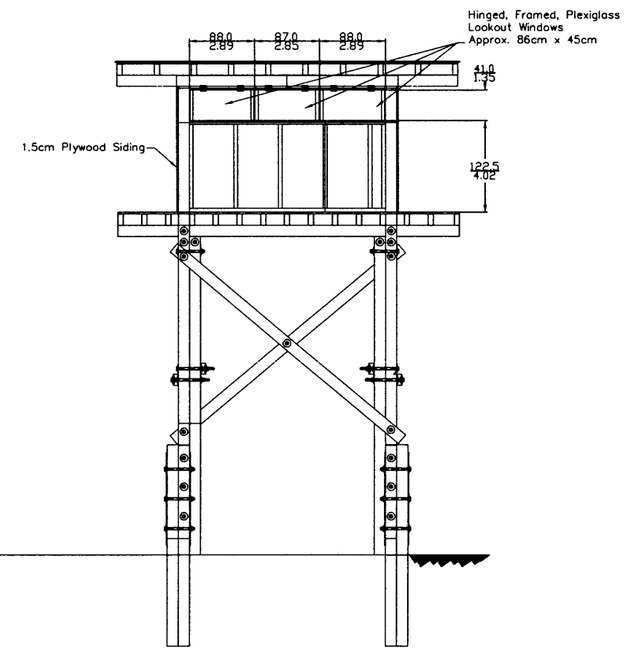


**Back View**
(Components omitted for clarity)
Scale: 1:200

5 0 5 10 15
1:200

UNLESS OTHERWISE NOTED, LINEAR DIMENSIONS SHOWN ARE IN MILLIMETERS.

| SYMBOL | DESCRIPTION | DATE | APR |
|---|---|---|---|

DESIGNED BY: AED
DATE: 11-15-06
DWN BY: AED
SUBMITTED BY: PHILIP J. PINELLO CHIEF, PDT PACILITIES DESIGN
CHK BY: ABB
FILE NO.: AF0607 B-AR03EL

US Army Corps of Engineers
Transatlantic Programs Center

AFGHANISTAN NATIONAL POLICE (ANP) DISTRICT HEADQUARTERS COMPOUNDS - 1 STORY HQ
AFGHANISTAN
GUARD TOWERS
ELEVATIONS

SHEET REFERENCE NUMBER:
B
A-3

11/14/2006
h:\projects\afghanistan\af0607\af0607b\arc\AR0607B-AR03EL.dwg

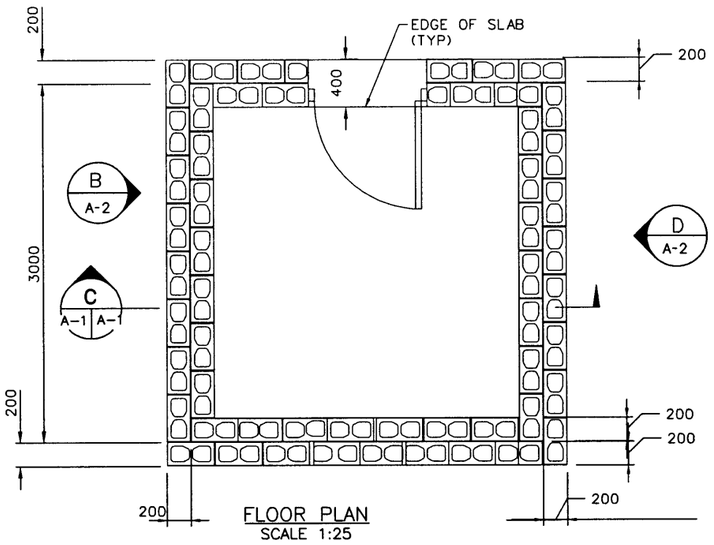


FLOOR PLAN
SCALE 1:25

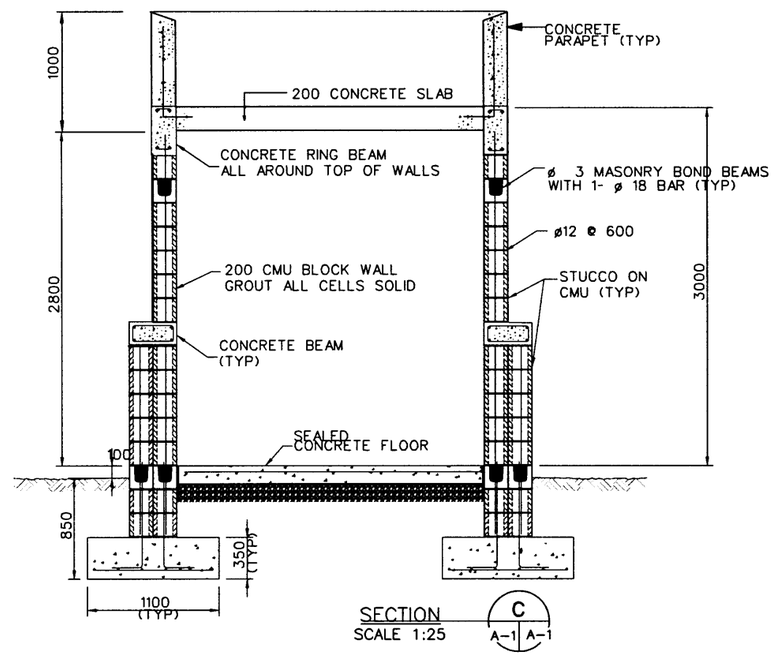


SECTION
SCALE 1:25

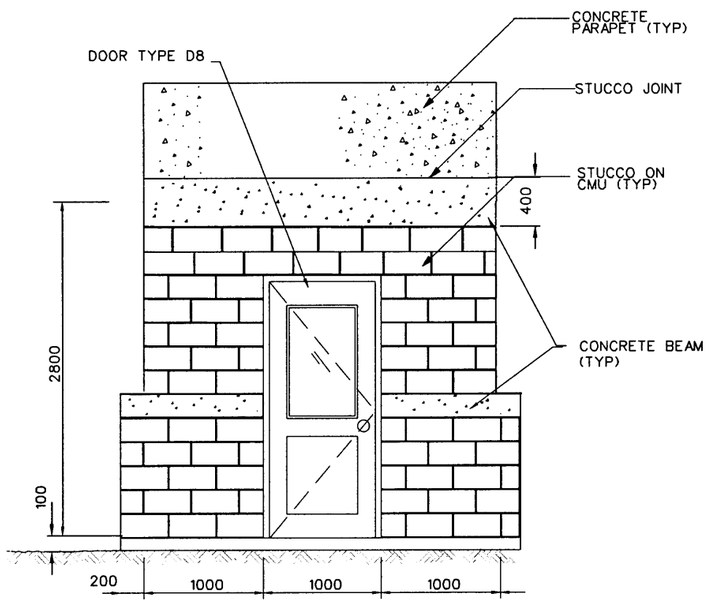


ELEVATION
SCALE 1:25

1 .50 0 1 1.5
1:25

| SYMBOL | DESCRIPTION | DATE | APR |
|---|---|---|---|

DESIGNED BY: TCP
DATE: 11-15-06
DWN BY: JSG
SUBMITTED BY:
CHK BY: ABB
FILE NO.: AF0607 C-AR01PN

US Army Corps of Engineers
Transatlantic Programs Center

AFGHANISTAN NATIONAL POLICE (ANP) DISTRICT HEADQUARTERS COMPOUNDS - 1 STORY HQ
AFGHANISTAN
GUARD SHACK
STRUCTURAL PLAN AND ELEVATIONS

SHEET REFERENCE NUMBER:
C
A-1

11/14/2006
h:\projects\Afghanistan\af0607\af0607c\arc\AF0607C-AR01PN.dwg

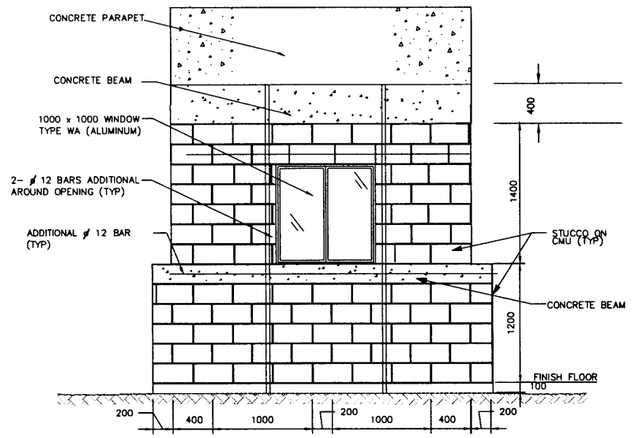


ELEVATIONS
SCALE 1:25
B & D
A–2 A–2

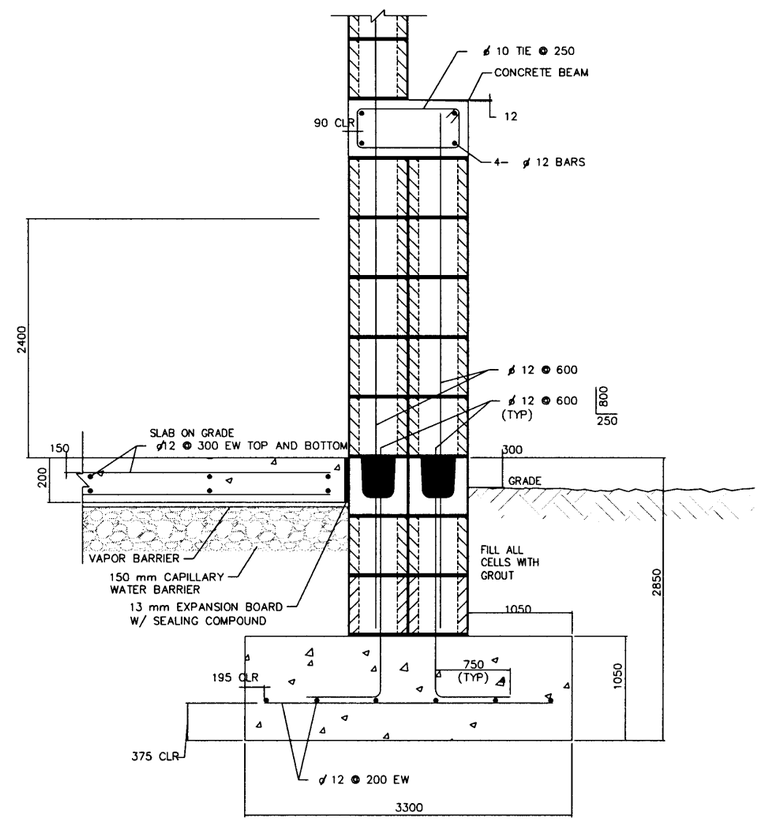


DETAIL 2
SCALE 1:10

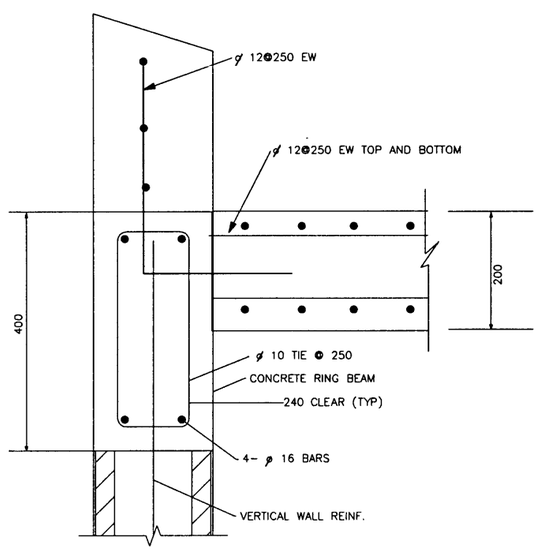


SECTION D
SCALE 1:5

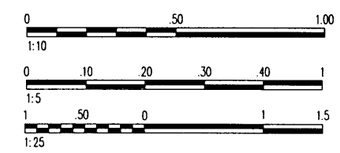


UNLESS OTHERWISE NOTED, LINEAR DIMENSIONS SHOWN ARE IN MILLIMETERS.

| SYMBOL | DESCRIPTION | DATE | APR |
|---|---|---|---|

DESIGNED BY: TCP
DATE: 11-15-06
DWN BY: JSG
SUBMITTED BY: PHILIP J. PINELLO CHIEF, PDT I FACILITIES DES.
CHK BY: ABB
FILE NO.: AF0607 C-AR02DT

US Army Corps of Engineers
Transatlantic Programs Center

AFGHANISTAN NATIONAL POLICE (ANP) DISTRICT HEADQUARTERS COMPOUNDS - 1 STORY HQ
AFGHANISTAN
GUARD SHACK
ELEVATION AND DETAILS

SHEET REFERENCE NUMBER:
C
A-2

11/14/2006
h:\projects\Afghanistan\af0607\af0607c\arc\AF0607C-AR02DT.dwg

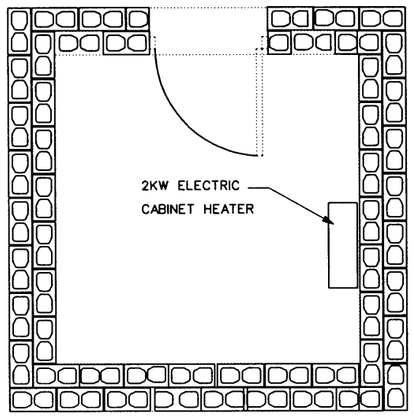


## HVAC PLAN
SCALE 1: 25

1 .50 0 1 1.5
1:25

UNLESS OTHERWISE NOTED, LINEAR DIMENSIONS SHOWN ARE IN MILLIMETERS.

| SYMBOL | DESCRIPTION | DATE | APR |
|---|---|---|---|

DESIGNED BY: TWS
DATE: 11-15-06
DWN BY: JMC
SUBMITTED BY: MICHAEL HOWELL CHIEF, PDT BLDG SYSTEMS
CHK BY: MFH
FILE NO.: AF0607 C-MH01PN

US Army Corps of Engineers
Transatlantic Programs Center

AFGHANISTAN NATIONAL POLICE (ANP) DISTRICT HEADQUARTERS COMPOUNDS - 1 STORY HQ
AFGHANISTAN
GUARD SHACK
HVAC PLAN

SHEET REFERENCE NUMBER:
C
M-1

11/14/2006
h:\projects\afghanistan\af0607\af0607c\mec\AF0607C-MH01PN.DWG

NOTES:
1. FOR LEGEND AND ABBREVIATIONS SEE DRAWING SE-1.
2. EMERGENCY LIGHT SHALL BE CONNECTED AHEAD OF LIGHT SWITCH.
3. FOR LIGHT FIXTURE SCHEDULE SEE DRAWING SE-2.
4. COORDINATE LOCATION OF ALL ELECTRICAL FIXTURES AND EQUIPMENT WITH ALL OTHER TRADES.
5. ALL WIRING SHALL BE SURFACE MOUNTED IN METAL CONDUIT.
6. PLAN IS TYPICAL FOR GUARD SHACK #1 AND #2, EXCEPT GUARD SHACK #1 WILL BE FED FROM LOAD CENTER 'E' LOCATED IN THE GUARD HOUSE. SEE PANEL SCHEDULE ON DRAWING E-1 FOR GUARD HOUSE.
7. SEE DRAWING XE-1 FOR LOCATION OF GUARD SHACKS.

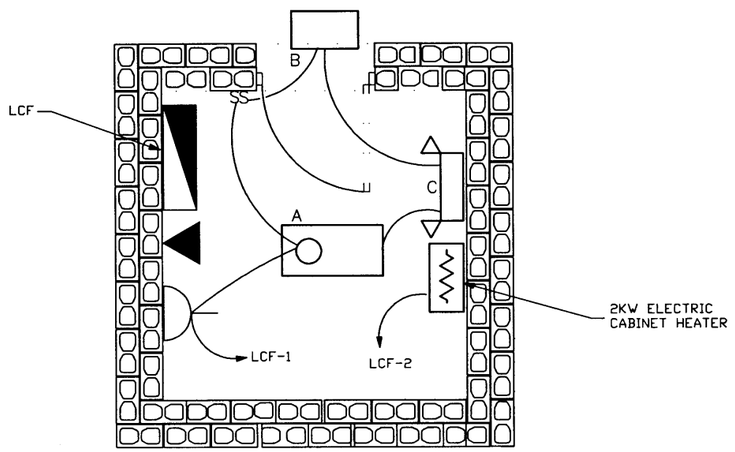


LIGHTING PLAN
SCALE 1: 25

LOAD CENTER "F" GUARD SHACK #2

40 AMP MAIN CIRCUIT BREAKER, 220V, 1 PH, 2W, 50 HZ, 100A BUS, 10000 AIC

| CKT. NO. | TRIP AMPS | NO. POLES | WIRE $MM^2$ | GND $MM^2$ | CONDUIT MM | LOAD SERVED | LOAD-V.A. |
|---|---|---|---|---|---|---|---|
| 1 | 20 | 1 | 4 | 4 | 20 | LIGHTING& RECEP.GUARD SHACK#2 | 430 |
| 2 | 20 | 1 | 4 | 4 | 20 | ELECT.HEAT GUARD SHACK#2 | 2000 |
| 3 | 20 | 1 | | | | SPARE | 500 |
| 4 | 20 | 1 | | | | SPARE | 500 |
| 5 | | | | | | SPACE | |
| 6 | | | | | | SPACE | |
| 7 | | | | | | SPACE | |
| 8 | | | | | | SPACE | |
| | | | | | | TOTAL CONN. LOAD | 3430 |

TOTAL CONN. LOAD 3.43 KVA.
80 %DEMAND = EST. DEMAND LOAD: 2.75 SERVED FROM: PPSB

1 .50 0 1 1.5
1:25

UNLESS OTHERWISE NOTED, LINEAR DIMENSIONS SHOWN ARE IN MILLIMETERS.

| SYMBOL | DESCRIPTION | DATE | APR |
|---|---|---|---|

DESIGNED BY: MM | DATE: 11-15-06
DWN BY: MM | SUBMITTED BY: MICHAEL HOWELL CHIEF, PDT BLDG SYSTEMS
CHK BY: MFH | FILE NO.: AF0607 C-EL01PN

US Army Corps of Engineers
Transatlantic Programs Center

AFGHANISTAN NATIONAL POLICE (ANP) DISTRICT HEADQUARTERS COMPOUNDS - 1 STORY HQ
AFGHANISTAN
GUARD SHACK
LIGHTING PLAN

SHEET REFERENCE NUMBER:
C
E-1

11/14/2006
h:\projects\afghanistan\af0607\af0607c\ele\AF0607C-EL01PN.DWG

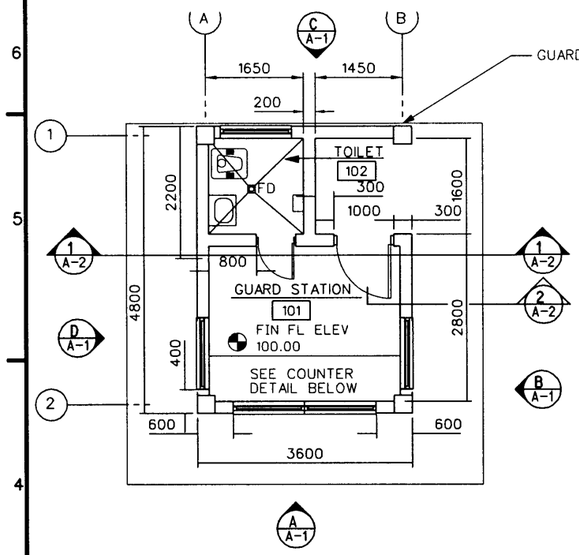


## FLOOR PLAN
SCALE 1 : 50

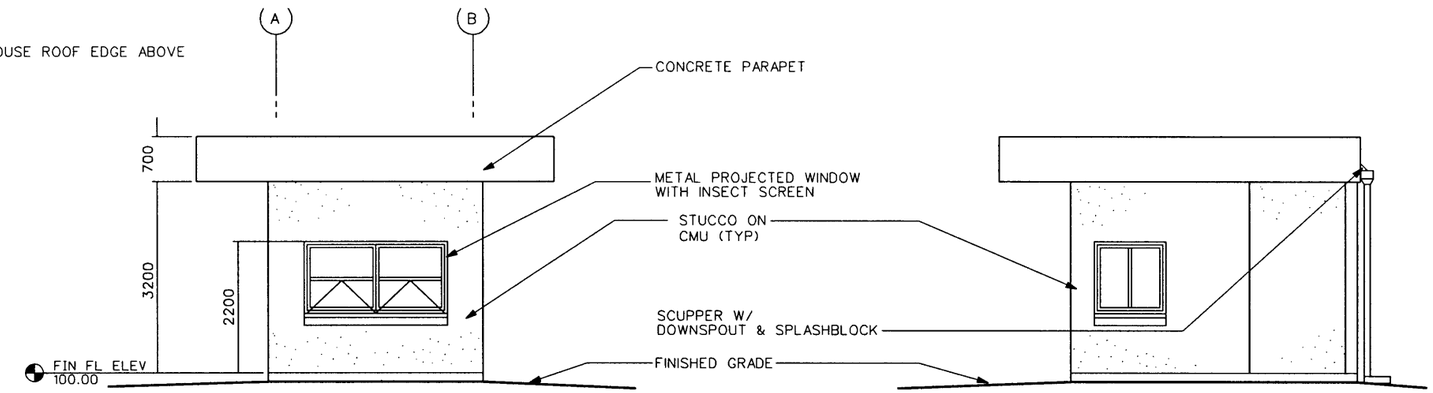


## ELEVATION A
SCALE 1 : 50

## ELEVATION B
SCALE 1 : 50

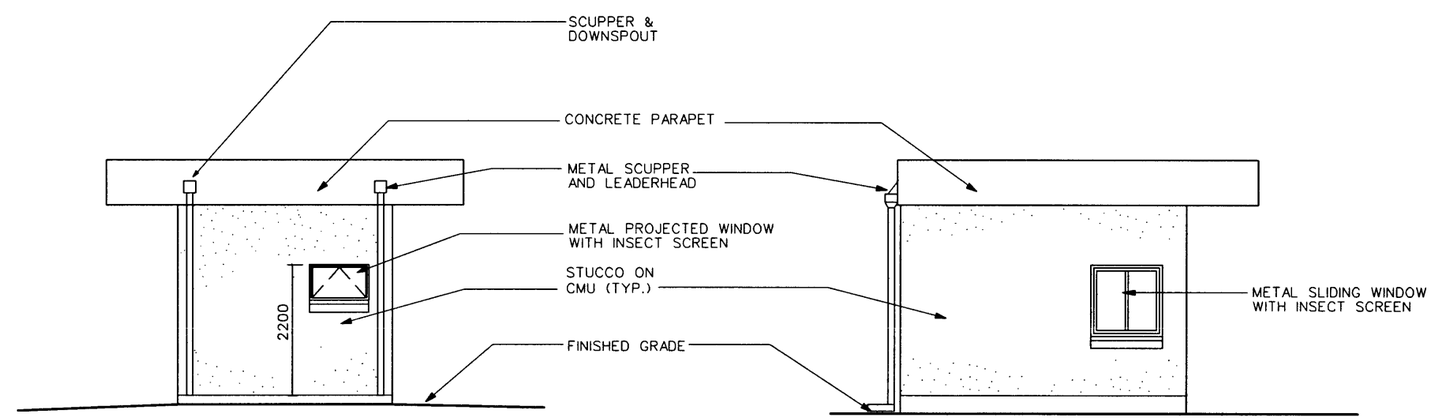


## ELEVATION C
SCALE 1 : 50

## ELEVATION D
SCALE 1 : 50

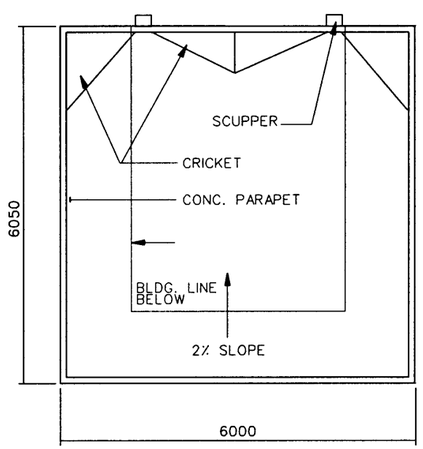


## ROOF PLAN
SCALE 1 : 50

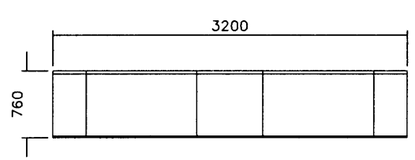


## COUNTER PLAN @ GUARD STATION
NOT TO SCALE

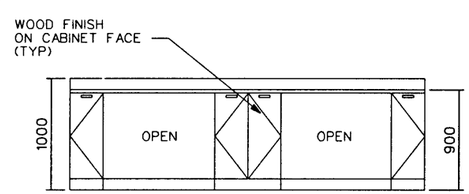


## ELEVATION OF COUNTER
NOT TO SCALE

NOTES:

1. EASTERN WATER CLOSET SHALL FACE NORTH-SOUTH.
2. SEE CIVIL DRAWINGS FOR EXACT LOCATION OF NORTH ARROW.

1 0 1 2 3 4
1:50

| SYMBOL | DESCRIPTION | DATE | APV |
|---|---|---|---|

DESIGNED BY: ABB
DATE: 11-15-06
DWN BY: JSG
SUBMITTED BY: PHILIP J. PANELLO CHIEF, ARCH. & FACILITIES DES.
CHK BY: ABB
FILE NO.: AF0607 D-AR01PN

US Army Corps of Engineers
Transatlantic Programs Center

AFGHANISTAN NATIONAL POLICE (ANP) DISTRICT HEADQUARTERS COMPOUNDS - 1 STORY HQ
AFGHANISTAN
GUARD HOUSE
FLOOR PLAN,
ELEVATIONS AND SECTIONS

SHEET REFERENCE NUMBER:
D
A-1

11/14/2006
h:\projects\afghanistan\af0607\af0607d\arc\af0607d-ar01pn.dwg

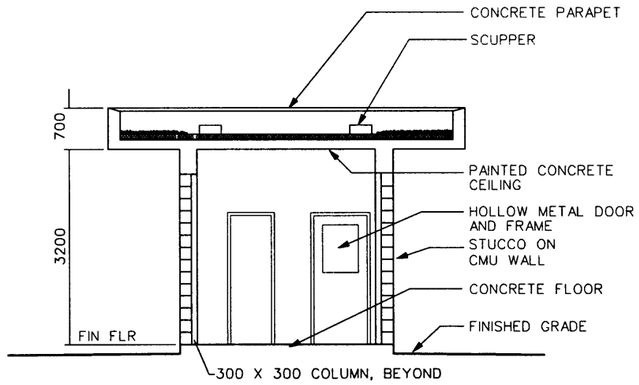


## SECTION 1 (A-1/A-2)
SCALE 1 : 50

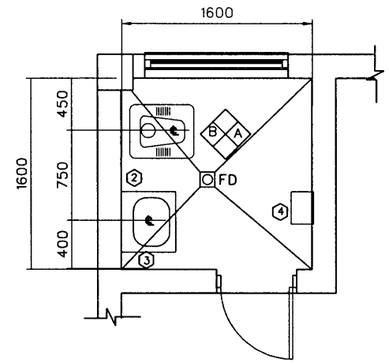


## ENLARGED TOILET PLAN
NOT TO SCALE

## TOILET ACCESSORY SCHEDULE

| | | |
|---|---|---|
| 1 | NOT USED | |
| 2 | MG | METAL FRAMED MIRROR (650W X 550H) |
| 3 | SD | SOAP DISPENSER |
| 4 | PTDHC | COMBINATION PAPER TOWEL DISPENSER/WASTE RECEPTACLE |

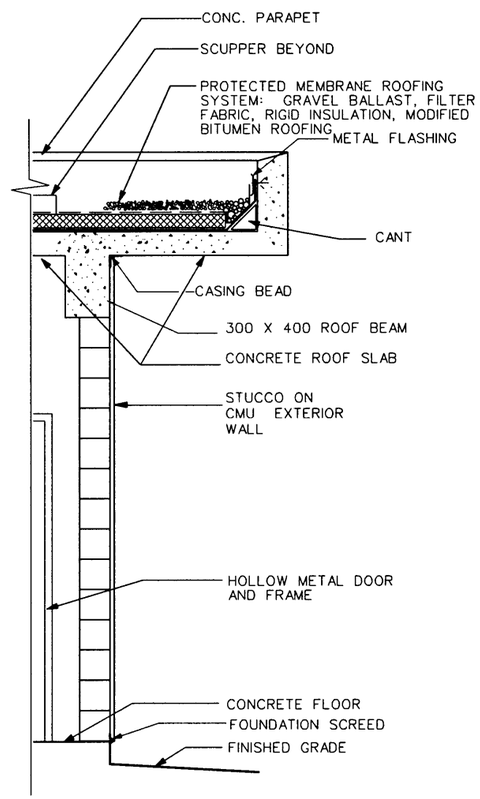


## WALL SECTION 2 (A-1/A-2)
SCALE 1 : 20

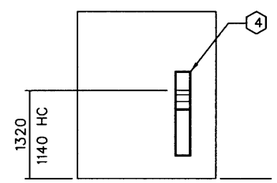


## ELEVATION A
SCALE NTS

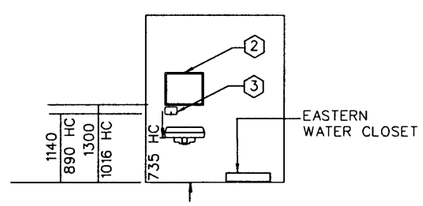


## ELEVATION B
SCALE NTS

## TOILET FIXTURE AND ACCESSORY MOUNTING HEIGHTS (TYP)

NOTES:

1. THESE ARE NOT ACTUAL INTERIOR TOILET ROOM ELEVATIONS. THEY ARE SHOWN TO GIVE TYPICAL MOUNTING HEIGHTS ONLY.
2. WHERE FLOOR DRAIN OCCURS, SLOPE FINISHED FLOOR TO DRAIN AT 1%.
3. DEPRESS CONCRETE FLOOR SLAB 50 MM WHERE FLOOR FINISH IS CERAMIC TILE.

ROOM FINISH SCHEDULE NOTES:

1. ALL INTERIOR AND EXTERIOR SURFACES NOT PROVIDED WITH A COLOR FACTORY FINISH SHALL RECEIVE PAINT IN ACCORDANCE WITH SPECIFICATIONS UNLESS OTHERWISE DIRECTED BY THE CONTRACTING OFFICER.
2. WHERE SCHEDULED, PLASTER OR TILE WALL FINISH SHALL EXTEND 100 MM ABOVE THE SUSPENDED CEILING.
3. ALL WALL PENETRATIONS SHALL BE SEALED TO PROVIDE A NEAT APPEARANCE. PENETRATIONS OF EXTERIOR WALLS SHALL BE SEALED TO BE WATER-TIGHT. SEALANT SHALL BE APPLIED IN ACCORDANCE WITH SPECIFICAITONS.
4. SEALANTS SHALL MATCH THE COLOR OF ADJACENT SURFACES.

1 0 1 2 3 4
1:50
1 .50 0 1
1:20

| SYMBOL | DESCRIPTION | DATE | APR |
|---|---|---|---|

DESIGNED BY: ABB | DATE: 11-15-06
DWN BY: JSG | SUBMITTED BY: PHILIP L. PINELLO, CHIEF, PDT FACILITIES DES
CHK BY: ABB | FILE NO.: AF0607 D-AR02SE

US Army Corps of Engineers
Transatlantic Programs Center

AFGHANISTAN NATIONAL POLICE (ANP) DISTRICT HEADQUARTERS COMPOUNDS - 1 STORY HQ
AFGHANISTAN
GUARD HOUSE
SECTIONS AND TOILET PLANS

SHEET REFERENCE NUMBER:
D
A-2

11/14/2006
h:\projects\Afghanistan\af0607\af0607d\arc\af0607d-ar02se.dwg
auto_sysime

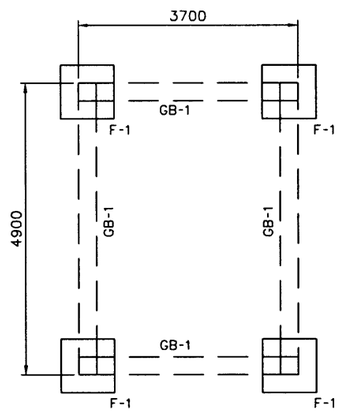


FOUNDATION PLAN
SCALE 1:50

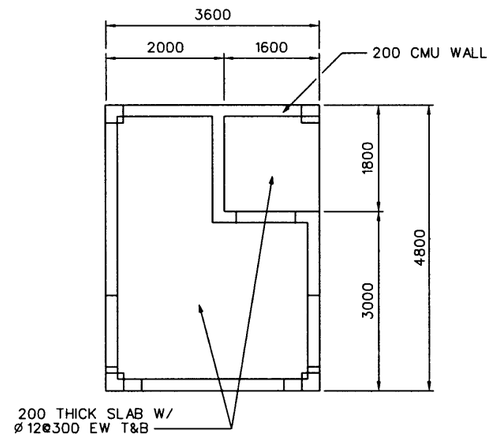


FLOOR PLAN
SCALE 1:50

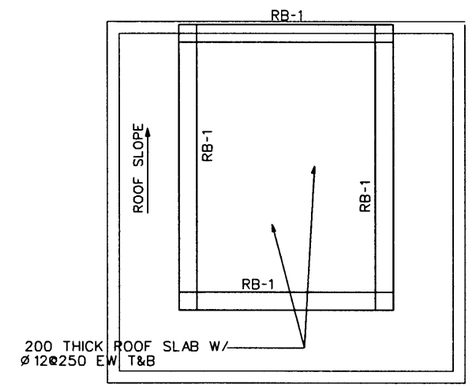


ROOF PLAN
SCALE 1:50

| | |
|---|---|
| DESIGNED BY: TCP | DATE: 11-15-06 |
| DWN BY: TCP | SUBMITTED BY: PHILIP J. PINELLO CHIEF, PDT FACILITIES DES. |
| CHK BY: KGO | FILE NO.: AF0607 D-S801PN |

US Army Corps of Engineers
Transatlantic Programs Center

AFGHANISTAN NATIONAL POLICE (ANP) DISTRICT HEADQUARTERS COMPOUNDS - 1 STORY HQ
AFGHANISTAN
GUARD HOUSE
STRUCTURAL PLAN

SHEET REFERENCE NUMBER:
D
S-1

11/14/2006
h:\projects\Afghanistan\af0607\af0607d\str\af0607d-S801PN.dwg
auto_sylme

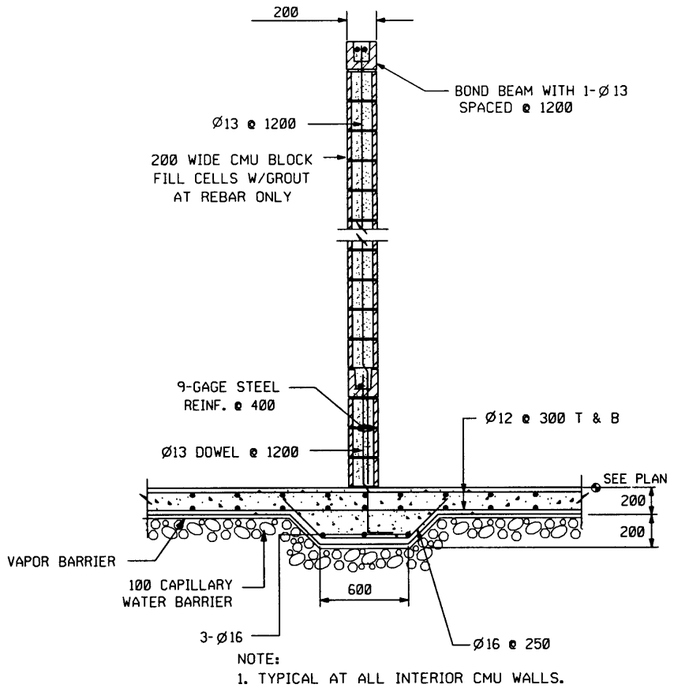


WALL SECTION (1 / S-1 | S-2)
SCALE NTS

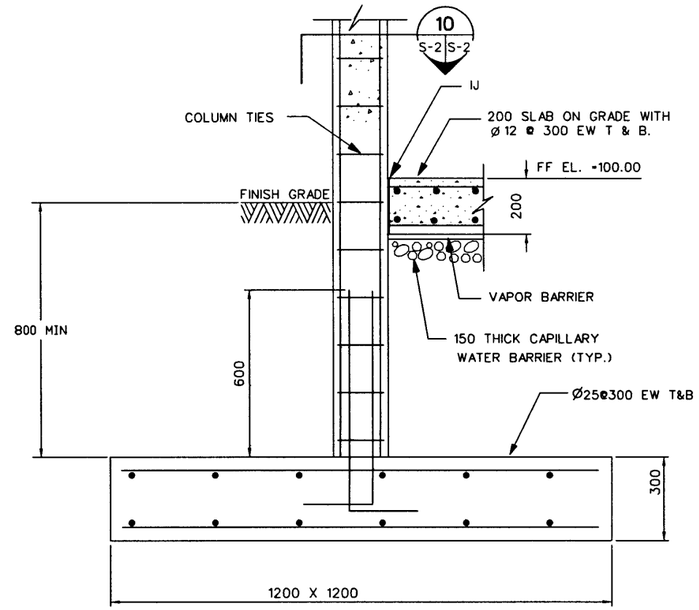


SECTION (2 / S-1 | S-2)
SCALE 1:10

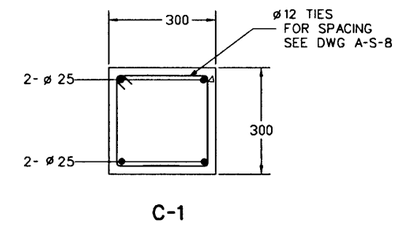


SECTION (10 / S-2 | S-2)
SCALE 1:10

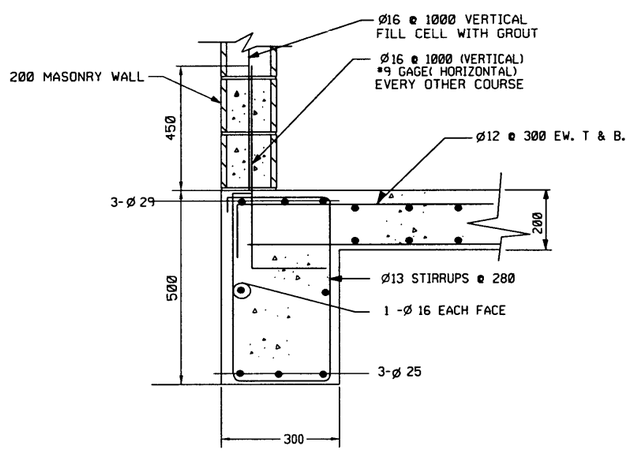


SECTION (3 / S-1 | S-2)
SCALE 1:10

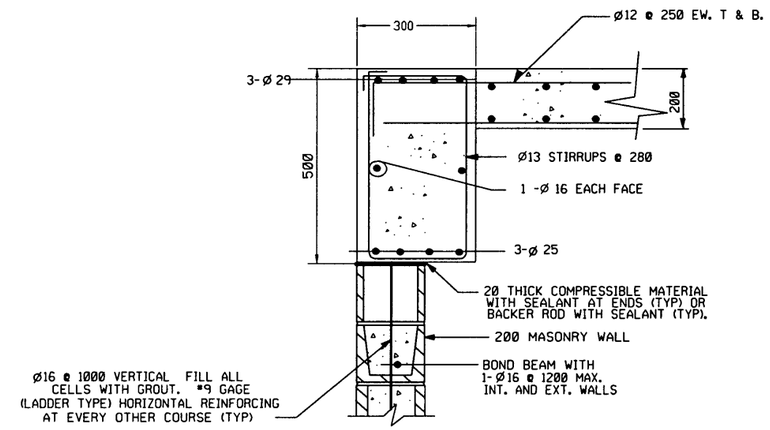


SECTION (4 / S-1 | S-2)
SCALE 1:10

| SYMBOL | DESCRIPTION | DATE | APR |
|---|---|---|---|

DESIGNED BY: TCP
DATE: 11-15-06
DWN BY: TCP
SUBMITTED BY: PHILIP J. PINELLO CHIEF, PDT FACILITIES DES
CHK BY: KGO
FILE NO.: AF0607 D-SB02SE

US Army Corps of Engineers
Transatlantic Programs Center

AFGHANISTAN NATIONAL POLICE (ANP) DISTRICT HEADQUARTERS COMPOUNDS - 1 STORY HQ
AFGHANISTAN
GUARD HOUSE
STRUCTURAL SECTIONS

SHEET REFERENCE NUMBER:
D
S-2

11/14/2006
h:\projects\afghanistan\af0607\af0607d\str\af0607d-SB02SE.dwg
auto_system

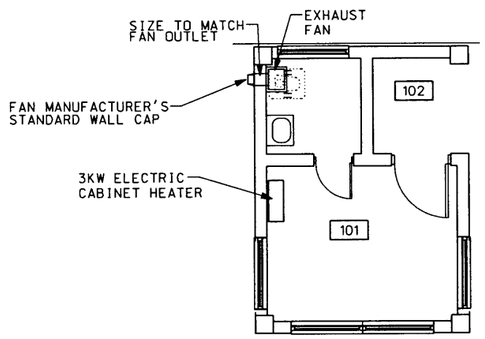


HVAC PLAN
SCALE- 1: 50

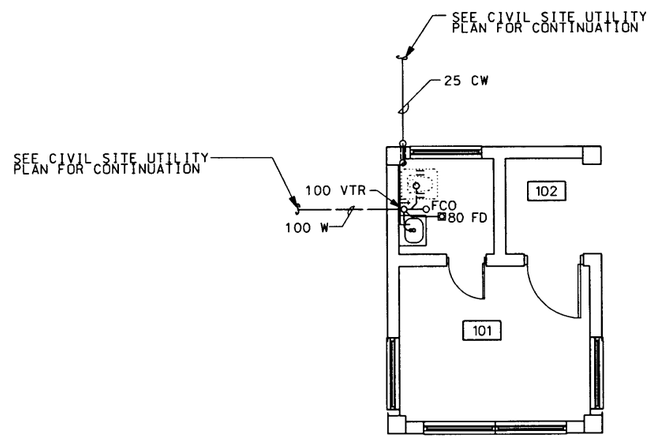


PLUMBING PLAN
SCALE- 1: 50

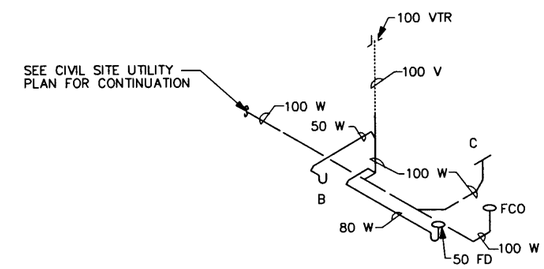


WASTE WATER RISER DIAGRAM
NOT TO SCALE

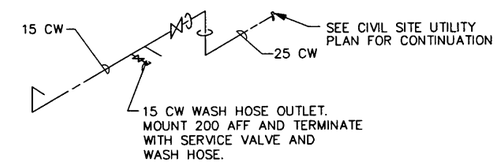


COLD WATER RISER DIAGRAM
NOT TO SCALE

EXHAUST FAN SCHEDULE

| EQUIPT. NO. | LOCATION | AIR QUANTITY CMH | S.P. MM–W.G. | FAN TYPE | ELECTRICAL DATA | | | | CONTROL DIAGRAM | SOUND POWER dBA | REMARKS |
|---|---|---|---|---|---|---|---|---|---|---|---|
| | | | | | W | VOLTS | PH | HZ | | | |
| | GUARD HOUSE | 85 | 6 | CEILING CABINET | 49 | 240 | 1 | 50 | E4 | | CEILING MOUNTED WITH GRAVITY BACKDRAFT DAMPER AND CEILING GRILLE |

1 0 1 2 3 4
1:50

UNLESS OTHERWISE NOTED, LINEAR DIMENSIONS SHOWN ARE IN MILLIMETERS.

| SYMBOL | DESCRIPTION | DATE | APP |
|---|---|---|---|

DESIGNED BY: TWS
DATE: 11-15-06
DWN BY: JMC
SUBMITTED BY: MICHAEL HOWELL CHIEF, PDT BLDG SYSTEMS
CHK BY: MFH
FILE NO.: AF0607D-MN01PN

US Army Corps of Engineers
Transatlantic Programs Center

AFGHANISTAN NATIONAL POLICE (ANP) DISTRICT HEADQUARTERS COMPOUNDS - 1 STORY HQ
AFGHANISTAN
GUARD HOUSE
HVAC & PLMBING PLAN

SHEET REFERENCE NUMBER:
D
MP-1

11/14/2006
h:\projects\afghanistan\af0607\af0607d\mec\AF0607D-MN01PN.DWG

LOAD CENTER "E" GUARD SHACK #1 & GUARD HOUSE, PRIMARY ECP

60 AMP MAIN CIRCUIT BREAKER, 220V, 1 PH, 2W, 50 HZ, 100A BUS, 10000 AIC

| CKT. NO. | TRIP AMPS | NO. POLES | WIRE $MM^2$ | GND. $MM^2$ | CONDUIT MM | LOAD SERVED | LOAD-V.A. |
|---|---|---|---|---|---|---|---|
| 1 | 20 | 1 | 4 | 4 | 20 | LIGHTING& RECEP.GUARD SHACK#1 | 430 |
| 2 | 20 | 1 | 4 | 4 | 20 | ELECT.HEAT GUARD SHACK | 2000 |
| 3 | 20 | 1 | 4 | 4 | 20 | LIGHTING& RECEP.GUARD HOUSE | 710 |
| 4 | 20 | 1 | 4 | 4 | 20 | ELECT.HEAT GUARD HOUSE | 3000 |
| 5 | 20 | 1 | | | | SPARE | 500 |
| 6 | 20 | 1 | | | | SPARE | 500 |
| 7 | | | | | | SPACE | 500 |
| 8 | | | | | | SPACE | 500 |
| | | | | | | TOTAL CONN. LOAD | 8140 |

TOTAL CONN. LOAD 8.14 KVA.
80 %DEMAND = EST. DEMAND LOAD: 6.52 SERVED FROM: PPSB

NOTES:
1. FOR LEGEND AND ABBREVIATIONS SEE DRAWING SE-1.
2. EMERGENCY LIGHT SHALL BE CONNECTED AHEAD OF LIGHT SWITCH.
3. FOR LIGHT FIXTURE SCHEDULE SEE DRAWING SE-2.
4. COORDINATE LOCATION OF ALL ELECTRICAL FIXTURES AND EQUIPMENT WITH ALL OTHER TRADES.
5. ALL WIRING SHALL BE SURFACE MOUNTED IN METAL CONDUIT.
6. SEE DRAWING XE-1 FOR LOCATION OF GUARD HOUSE.

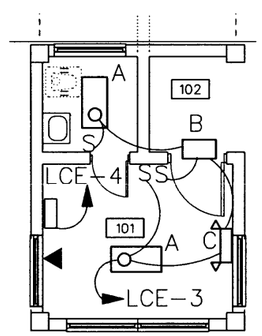


LIGHTING & COMMUNICATION PLAN
SCALE= 1: 50

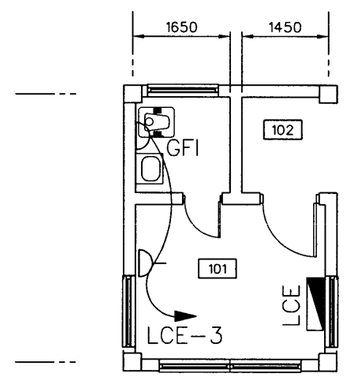


POWER PLAN
SCALE= 1: 50

1 0 1 2 3 4
1:50

UNLESS OTHERWISE NOTED, LINEAR DIMENSIONS SHOWN ARE IN MILLIMETERS.

| SYMBOL | DESCRIPTION | DATE | APP. |
|---|---|---|---|

DESIGNED BY: MM
DATE: 11-15-06
DWN BY: MM
SUBMITTED BY: MICHAEL HOWELL CHIEF, PDT BLDG SYSTEMS
CHK BY: MFH
FILE NO.: AF0607 D-ELOIPN

US Army Corps of Engineers
Transatlantic Programs Center

AFGHANISTAN NATIONAL POLICE (ANP) DISTRICT HEADQUARTERS COMPOUNDS - 1 STORY HQ
AFGHANISTAN
GUARD HOUSE
LIGHTING & POWER PLAN

SHEET REFERENCE NUMBER:
D
E-1

11/14/2006
h:\projects\afghanistan\af0607\af0607d\ele\AF0607D-ELOIPN.DWG

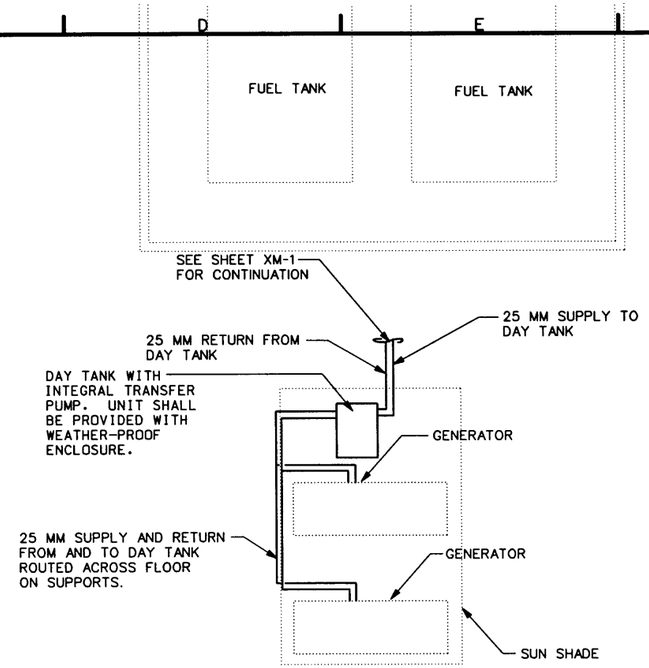


FUELING SYSTEM PLAN
SCALE 1: 50

1 0 1 2 3 4
1:50

UNLESS OTHERWISE NOTED, LINEAR DIMENSIONS SHOWN ARE IN MILLIMETERS.

| SYMBOL | DESCRIPTION | DATE | APP |
|---|---|---|---|

DESIGNED BY: TWS
DATE: 11-15-06
DWN BY: JMC
SUBMITTED BY: MICHAEL HOWELL CHIEF, PDT BLDG SYSTEMS
CHK BY: MFH
FILE NO.: AF0607 E-MN01PN

US Army Corps of Engineers
Transatlantic Programs Center

AFGHANISTAN NATIONAL POLICE (ANP) DISTRICT HEADQUARTERS COMPOUNDS - 1 STORY HQ
AFGHANISTAN
POWER PLANT
FUELING SYSTEM PLAN

SHEET REFERENCE NUMBER:
E
MP-1

11/14/2006
h:\projects\afghanistan\af0607\af0607e\mec\AF0607E-MN01PN.DWG

GENERATORS OPERATING LOGIC:

1. ONE GENERATOR SHALL OPERATE AT ALL TIME.

2. WHEN THE OPERATING GENERATOR REACHES 90% OF IT'S RATED CAPACITY (90KVA), THE SECOND GENERATOR SHALL START, SYNCHRONIZE WITH THE OPERATING GENERATOR AND COME ON-LINE TO SHARE THE TOTAL DEMAND LOAD EQUALLY.

3. WHEN THE TOTAL DEMAND LOAD ON THE SWITCHBOARD REACHES 80% OF THE FIRST GENERATOR RATING (80KVA), THE SECOND GENERATOR SHALL COME OFF-LINE, RUN THROUGH A COOL DOWN CYCLE AND GO INTO A STAND-BY MODE.

4. GENERATOR SYNCHRONIZING EQUIPMENT SHALL BE ADJUSTABLE BETWEEN 60% TO 95% OF THE GENERATOR RATING.

NOTES:

1. FOR LEGEND AND ABBREVIATIONS SEE DRAWING E-10.

2. CONTRACTOR SHALL CONFIRM THAT ALL CIRCUIT RATINGS ARE BASED ON THE ACTUAL NAMEPLATE OF THE SUPPLIED EQUIPMENT.

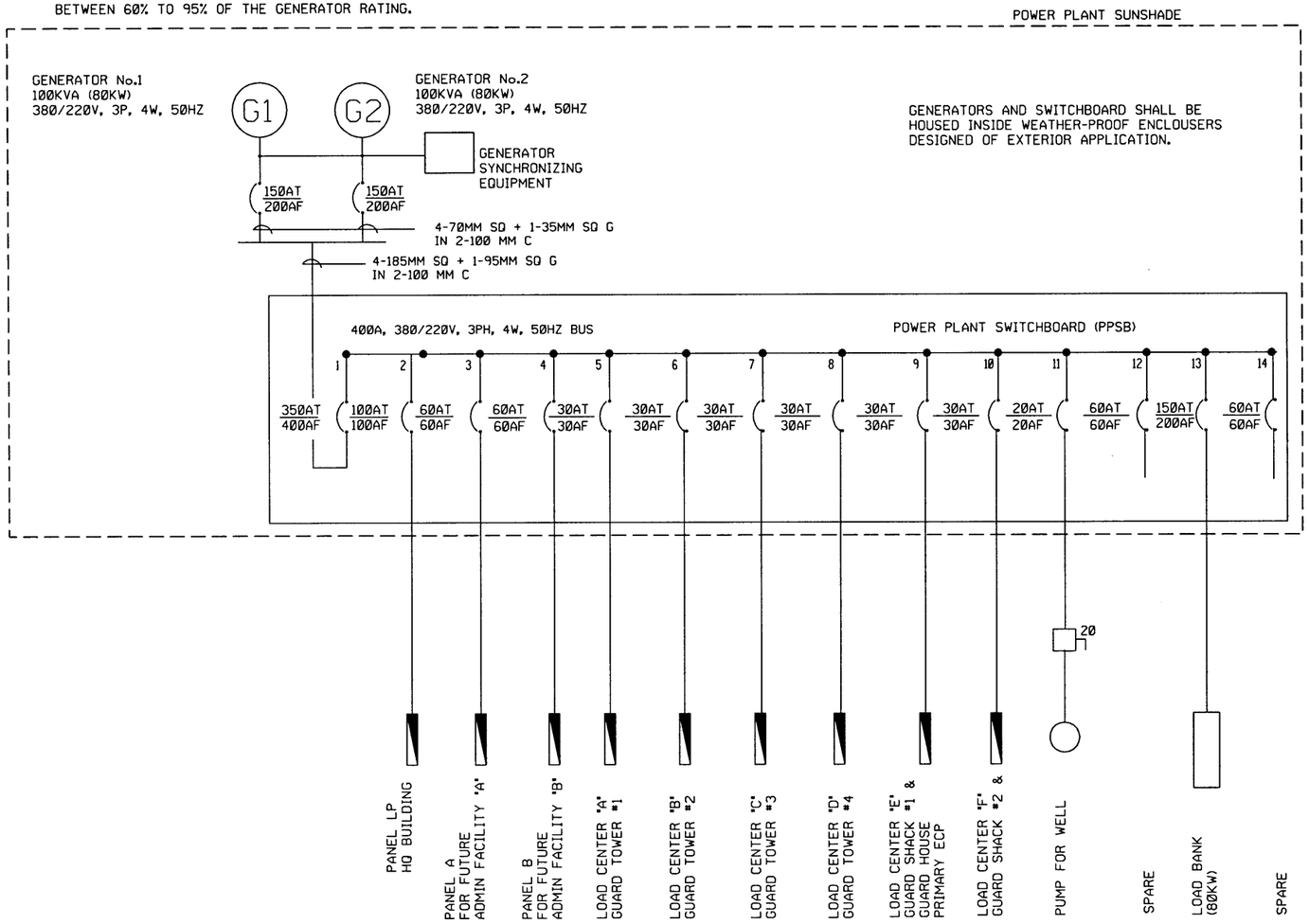


ONE LINE DIAGRAM
NOT TO SCALE

PANELBOARD: PPSB
MOUNTED: FLOOR
ASYM. A.I.C. MIN: MINIMUM 22,000
MAIN BREAKER (AF/AT): 400/350
VOLTAGE RATING: 380/220V, 3PH, 4W, 50HZ
AMP. RATING: 400

| | CKT. NO. | TRIP AMPS | NO. POLES | WIRE MM2 | GND MM2 | CONDUIT MM | CONN. KW | REMARKS |
|---|---|---|---|---|---|---|---|---|
| | 1 | 350 | 3 | SEE PANEL SCHEDULE THIS SHEET | | | | MAIN BREAKER |
| | 2 | 100 | 3 | 35 | 16 | 50 | 54.77 | PANEL LP.HEADQUARTERS BUILDING |
| * | 3 | 60 | 3 | | | | 30.00 | PANEL A. FUTURE |
| * | 4 | 60 | 3 | | | | 30.00 | PANEL B. FUTURE |
| * | 5 | 30 | 1 | | | | 6.00 | LOAD CENTER A.GURD TOWER#1 |
| * | 6 | 30 | 1 | | | | 6.00 | LOAD CENTER B.GUARD TOWER #2 |
| * | 7 | 30 | 1 | | | | 6.00 | LOAD CENTER C.GUARD TOWER #3 |
| * | 8 | 30 | 1 | | | | 6.00 | LOAD CENTER D.GUARD TOWER #4 |
| | 9 | 30 | 1 | 6 | 6 | 50 | 8.14 | LOAD CENTER E.GUARD SHACK#1&GH |
| | 10 | 30 | 1 | 6 | 6 | 50 | 3.43 | LOAD CENTER F.GUARD SHACK #2 |
| | 11 | 20 | 3 | 6 | 6 | 50 | 6.55 | PUMP FOR WELL |
| | 12 | 60 | 3 | | | | | SPARE |
| | 13 | 150 | 3 | | | | | LOAD BANK |
| | 14 | 60 | 3 | | | | | SPARE |
| | | | | | | TOTAL CON. KW | 156.89 | OR 196.11 KVA |

CONN. LOAD: 196.11 KVA. 60% DEMAND=EST DEM LOAD 117.67
SUPPLIED FROM: POWER PLANT SWITCHBOARD KVA.

* ESTIMATED DEMAND LOAD. CONTRACTOR SHALL DESIGN / BUILD SECONDARY SERVICE ENTRANCE.

| SYMBOL | DESCRIPTION | DATE | APR |
|---|---|---|---|

DESIGNED BY: MM | DATE: 11-15-06
DWN BY: MM | SUBMITTED BY: MICHAEL HOWELL, CHIEF, PDT BLDG SYSTEMS
CHK BY: MFH | FILE NO.: AF0607 E-EP01DI

US Army Corps of Engineers
Transatlantic Programs Center

AFGHANISTAN NATIONAL POLICE (ANP) DISTRICT HEADQUARTERS COMPOUNDS - 1 STORY HQ
AFGHANISTAN
POWER PLANT
ONE LINE DIAGRAM

SHEET REFERENCE NUMBER:
E
E-1

11/14/2006
h:\projects\afghanistan\af0607\af0607e\ele\AF0607E-EP01DI.DWG

# GENERAL NOTES

## GENERAL

1. DESIGN REFERENCES:
   - A. AMERICAN CONCRETE INSTITUTE (ACI) BUILDING CODE REQUIREMENTS FOR REINFORCED CONCRETE (ACI 318).
   - B. SPECIFICATION FOR STRUCTURAL STEEL BUILDINGS - ALLOWABLE STRESS DESIGN AND PLASTIC DESIGN (S335).
   - C. AMERICAN WELDING SOCIETY (AWS) STRUCTURAL WELDING CODE - STEEL (AWS D 1.1).
   - E. MASONRY STRUCTURAL DESIGN FOR BUILDINGS (TM 5-809-3).
   - F. STEEL JOIST INSTITUTE (SJI) STANDARD SPECIFICATIONS, AND TABLES
   - G. STEEL DECK INSTITUTE (SDI) DESIGN MANUAL FOR COMPOSITE DECKS, FORM DECKS, AND ROOF DECKS.
   - H. MBMA MANUAL FOR LOW RISE BUILDING SYSTEMS.
2. DIMENSIONS PROVIDED IN SECTIONS OR DETAILS AND ON PLAN AND ELEVATION VIEWS ARE SHOWN USING MILLIMETERS. UNLESS OTHERWISE NOTED.
3. ALL BUILDING ELEVATIONS ARE GIVEN AS REFERENCE ELEVATIONS TO THE FINISHED GROUND FLOOR ELEVATION. A REFERENCE FLOOR ELEVATION OF 100.00 IS USED FOR THE FINISHED GROUND FLOOR.
4. CONTRACTOR SHALL VERIFY ALL DIMENSIONS AND CONDITIONS AFFECTING THE WORK AT THE JOB SITE.
5. ALL STRUCTURAL WORK AND MATERIALS SHALL CONFORM TO THE REQUIREMENTS OF THE PROJECT SPECIFICATIONS.
6. DO NOT SCALE DRAWINGS.
7. FOR LOCATION AND DIMENSIONS OF PARTITIONS, DEPRESSIONS, GROOVES, SLEEVES, CURBS, OPENINGS, EMBEDDED OR ATTACHED ITEMS, REFER TO ARCHITECTURAL, MECHANICAL, ELECTRICAL, AND PLUMBING DRAWINGS.
8. FOR ADDITIONAL INFORMATION REFER TO INDIVIDUAL SHEETS FOR EACH STRUCTURE.
9. METAL BUILDING SYSTEMS SHALL BE AS REQUIRED ON THE DRAWINGS AND NOTES.
10. FOOTING ELEVATIONS GIVEN ARE AT TOP OF FOOTING BASE.
11. ALL FOOTING EXCAVATIONS SHALL BE INSPECTED AND APPROVED BY THE CONTRACTING OFFICER OR HIS APPROVED AGENT PRIOR TO PLACING CONCRETE.

## CONCRETE

1. EMBEDDED MATERIAL:
   - A. BEFORE PLACING CONCRETE, CARE SHALL BE TAKEN TO INSURE THAT ALL EMBEDDED ITEMS ARE IN POSITION AND SECURELY FASTENED IN PLACE.
   - B. ELECTRIC CONDUITS AND PIPING TO BE EMBEDDED IN CONCRETE SHALL MEET THE APPLICABLE REQUIREMENTS OF ACI 318.
   - C. WATERSTOPS, WHERE REQUIRED, SHALL BE MADE CONTINUOUS. ALL PROJECTING WATERSTOPS SHALL BE SUPPORTED AND PROTECTED FROM DAMAGE DURING CONSTRUCTION.
2. PROVIDE 20 MILLIMETER CHAMFER FOR ALL EXPOSED EDGES OF COLUMNS, BEAMS, WALLS AND ANY OTHER MEMBERS AS DIRECTED BY THE CONTRACTING OFFICER.
3. NOT USED
4. PROVIDE APPROPRIATE DEPRESSIONS IN SLABS FOR TILE OR OTHER SIMILAR MATERIALS. MAINTAIN FULL SLAB THICKNESS BELOW THESE DEPRESSIONS. SEE ARCHITECTURAL INTERIOR FINISH SCHEDULES, FLOOR PLANS, AND DETAILS FOR REQUIRED DEPRESSIONS.
5. JOINTS SHALL BE LOCATED IN ACCORDANCE WITH ACI-318.
6. FOR SLABS ON GRADE, CONTROL JOINTS SHALL BE LOCATED NOT MORE THAN 7.6 METERS APART IN EITHER DIRECTION UNLESS OTHERWISE NOTED.
7. CONSTRUCTION JOINTS FOR STRUCTURAL SLABS, BEAMS AND GIRDERS SHALL BE LOCATED WITHIN THE MIDDLE THIRD OF THEIR SPAN. JOINTS IN GIRDERS SHALL BE OFFSET A MINIMUM DISTANCE OF TWO TIMES THE WIDTH OF AN INTERSECTING BEAM.
8. A SET OF DRAWINGS SHOWING CONCRETE PLACING SEQUENCE AND LOCATION OF JOINTS SHALL BE SUBMITTED TO THE CONTRACTING OFFICER FOR APPROVAL PRIOR TO PREPARATION OF AFFECTED REINFORCING SHOP DRAWINGS.
9. ALL REINFORCING BARS SHALL BE PLACED IN ACCORDANCE WITH ACI BUILDING CODE (ACI-318).
10. ALL REINFORCING BARS SHALL BE DEFORMED BILLET-STEEL CONFORMING TO ASTM A 615, GRADE 60, OR APPROVED EQUAL WITH THE FOLLOWING MINIMUM REQUIREMENTS: MINIMUM YIELD STRENGTH 413 MPa (60000 PSI).
11. WELDED WIRE FABRIC SHALL BE COLD DRAWN CONFORMING TO ASTM A-185, GRADE 60, OR APPROVED EQUAL WITH THE FOLLOWING MINIMUM REQUIREMENTS: MINIMUM YIELD STRENGTH 413 MPa. (60000 PSI)
12. DETAILING OF REINFORCEMENT SHALL BE IN ACCORDANCE WITH THE LATEST ACI MANUAL FOR DETAILING (SP-66).
13. DIMENSIONS AND SPACING OF BARS ARE IN MILLIMETERS UNLESS OTHERWISE NOTED. THUS, Ø 20 X 300 LG.
14. CONCRETE SHALL HAVE A MINIMUM 28 DAY COMPRESSIVE STRENGTH OF 28 MPa (4,000 PSI) AND CONTAIN ASTM C-150 TYPE I CEMENT UNLESS OTHERWISE NOTED.
15. REINFORCEMENT MAY BE MOVED WITH APPROVAL OF THE CONTRACTING OFFICER TO CLEAR PIPES, SEALS, RECESSES, EMBEDDED METALWORK, AND CONDUITS.
16. CLEAR CONCRETE COVER FOR REINFORCING BARS IN CAST-IN-PLACE CONCRETE SHALL BE PROVIDED AS FOLLOWS, UNLESS OTHERWISE NOTED:
    - A. FOOTINGS OR BEAMS CAST AGAINST AND PERMANENTLY EXPOSED TO EARTH 75 MM.
    - B. FORMED SURFACES EXPOSED TO WEATHER OR EARTH:
      - (1). ø 16 BARS OR SMALLER 40MM
      - (2). ALL OTHERS 50MM
    - C. FORMED SURFACES NOT EXPOSED DIRECTLY TO WEATHER OR EARTH:
      - (1). SLABS, WALLS 20MM
      - (2). BEAMS, GIRDERS, COLUMNS: PRINCIPAL REINFORCEMENT, TIES OR STIRRUPS 40MM
17. REINFORCEMENT SHALL BE CONTINUOUS THROUGH ALL CONSTRUCTION JOINTS, BUT DISCONTINUOUS AT ALL CONTROL JOINTS, UNLESS OTHERWISE INDICATED.
18. REINFORCING BARS SHALL NOT BE BENT OR STRAIGHTENED IN A MANNER THAT WILL INJURE THE MATERIAL. BARS WITH KINKS OR IMPROPER BENDS SHALL NOT BE USED.
19. THE FIRST AND LAST BAR IN SLABS AND WALLS SHALL BE PLACED A MAXIMUM OF ONE-HALF OF THE BAR SPACING SHOWN UNLESS OTHERWISE NOTED.
20. THE CLEAR DISTANCE BETWEEN PARALLEL BARS IN A LAYER SHALL NOT BE LESS THAN THE NOMINAL DIAMETER OF THE BAR, NOR 33 MM. THE CLEAR DISTANCE BETWEEN LONGITUDINAL BARS IN COLUMNS SHALL NOT BE LESS THAN 1.5 TIMES THE NOMINAL BAR DIAMETER NOR 40 MM.
21. PROVIDE 1- Ø12 REBAR IN MID - DEPTH OF SLAB AT ALL RE-ENTRANT CORNERS.
22. PROVIDE SEALANT AT ALL CONTROL AND ISOLATION JOINTS. WHERE CONCRETE SLAB WORK WILL NOT BE COVERED BY SOME OTHER FINISH FLOOR MATERIAL PROVIDE TOOLED CONTROL JOINTS HAVING A RADIUS OF 3 MILLMETERS.
23. ALL CMU WALLS SHALL BE REINFORCED AS SHOWN ON THE DRAWINGS.

## STRUCTURAL STEEL

1. ALL METAL WORK SHOWN ON DRAWINGS SHALL BE FABRICATED OF STRUCTURAL STEEL UNLESS OTHERWISE NOTED.
2. DESIGN OF STRUCTURAL STEEL WORK SHALL BE IN ACCORDANCE WITH THE REQUIREMENTS OF THE SPECIFICATION FOR STRUCTURAL STEEL BUILDINGS - ALLOWABLE STRESS DESIGN AND PLASTIC DESIGN (S335).
3. ALL WELDING SHALL BE IN ACCORDANCE WITH THE APPLICABLE REQUIREMENTS OF THE CURRENT AWS, D1.1, STRUCTURAL WELDING CODE - STEEL.
4. WHERE WELD SIZE IS NOT CALLED OUT, USE AISC MINIMUM SIZE.
5. STRUCTURAL STEEL SHALL CONFORM TO THE REQUIREMENTS OF ASTM A500, GRADE B FOR STRUCTURAL TUBING AND ASTM A36 FOR OTHER STRUCTURAL SHAPES (UNLESS OTHERWISE NOTED).
6. ALL BOLTED CONNECTIONS SHALL BE BEARING TYPE CONNECTIONS MADE WITH Ø 19 DIAMETER BOLTS MEETING REQUIREMENTS OF ASTM A325, TYPE X (UNLESS NOTED OTHERWISE)
7. SHOP CONNECTIONS MAY BE EITHER BOLTED OR WELDED. ALL FIELD CONNECTIONS SHALL BE BOLTED UNLESS OTHERWISE SHOWN ON THE DRAWINGS.
8. UNLESS OTHERWISE NOTED BEAM END CONNECTIONS SHALL COMFORM TO A.I.S.C. STANDARD TWO ANGLE WEB CONNECTIONS. WHETHER BOLTED OR WELDED, EACH END CONNECTION SHALL BE CAPABLE OF SUPPORTING ONE - HALF THE TOTAL UNIFORM LOAD CAPACITY SHOWN IN THE ALLOWABLE UNIFORM LOAD TABLES, PART II , OF THE A.I.S.C. MANUAL OF STEEL CONSTRUCTION. HOLES WILL BE SHORT - SLOTTED IN THE OUTSTANDING ANGLE LEGS (THOSE CONNECTED TO THE SUPPORTING MEMBER) AND STANDARD OTHERWISE.
9. NO CONNECTION SHALL CONSIST OF LESS THAN 2 Ø 19 BOLTS OR A WELD CAPABLE OF RESISTING 2720 KILOGRAMS.
10. ALL ANCHOR BOLTS SHALL BE ASTM A36, EXCEPT AS OTHERWISE NOTED.
11. STRUCTURAL STEEL DESIGN IS BASED ON ALLOWABLE STRESS DESIGN.

## LEGENDS AND NOTATIONS: (UNLESS OTHERWISE NOTED)

- A. PLATE SIZES ARE GIVENIN MILLIMETERS. THUS, PL 200 x 600 X 10.
- B. ROLLED STEEL SHAPES ARE INDICATED BY AISC METRIC NOTATION THUS, W200 x 150.
- C. ANGLE SIZES ARE GIVEN IN MILLIMETERSTHUS, L 100 x 100 x 10 x 600 LG.
- D. WELDING NOTATION SIZE,LENGTH AND SPACING ARE GIVEN IN MILLIMETERS WITH SYMBOLS IN ACCORDANCE WITH AWS.
- E. BOLT SIZE DIAMETERS ARE GIVEN IN MILLIMETERS. LENGTH IS GIVEN IN MILLIMETERS. THUS, ø 19 X 300 LG.

## ABBREVIATIONS

| | |
|---|---|
| A.B. | ANCHOR BOLT |
| ADD | ADDED OR ADDITIONAL |
| AFF | ABOVE FINISH FLOOR |
| ARCH | ARCHITECTURAL |
| @ | AT THE RATE OF |
| BM | BEAM |
| BRG | BEARING |
| B OR BOT | BOTTOM |
| ℄ | CENTERLINE |
| CONC | CONCRETE |
| CJ | CONTROL JOINT |
| CJT | CONSTRUCTION JOINT |
| CIP | CAST-IN-PLACE |
| COL | COLUMN |
| CONT | CONTINUOUS |
| DIA OR Ø | DIAMETER |
| DIR | DIRECTION |
| DWG | DRAWING |
| EE | EACH END |
| EF | EACH FACE |
| ⊕ OR ELEV | ELEVATION |
| ES | EACH SIDE |
| EW | EACH WAY |
| EJT | EXPANSION JOINT |
| FF | FAR FACE |
| FTG | FOOTING |
| FDN | FOUNDATION |
| GB | GRADE BEAM |
| H OR HORZ | HORIZONTAL |
| HP | HIGH POINT |
| IJ | ISOLATION JOINT |
| JT | JOINT |
| KSM | KILOGRAMS PER SQUARE METER |
| LG | LONG |
| LL | LOWER LAYER |
| LP | LOW POINT |
| MCJ | MASONRY CONTROL JOINT |
| M | METERS |
| MM | MILLIMETERS |
| MAX | MAXIMUM |
| MECH | MECHANICAL |
| MIN | MINIMUM |
| NF | NEAR FACE |
| NO OR # | NUMBER |
| NTS | NOT TO SCALE |
| O/C | ON CENTER |
| OPNG | OPENING |
| PC | PRECAST |
| PEJ | PREMOLDED EXPANSION JOINT |
| PL | PLATE |
| PSF | POUNDS PER SQUARE FOOT |
| PSI | POUNDS PER SQUARE INCH |
| REINF | REINFORCEMENT |
| REF | REFERENCE |
| REQ | REQUIRED |
| SCH | SCHEDULE |
| SHT | SHEET |
| SIM | SIMILAR |
| STD | STANDARD |
| SQ | SQUARE |
| T | TOP |
| TB | TIE BEAM |
| T & B | TOP AND BOTTOM |
| TOC | TOP OF CONCRETE |
| TOF | TOP OF FOOTING |
| TOS | TOP OF SLAB OR TOP OF STEEL |
| TYP | TYPICAL |
| UL | UPPER LAYER |
| UON | UNLESS OTHERWISE NOTED |
| VERT | VERTICAL |
| WWF | WELDED WIRE FABRIC |
| WP | WORKING POINT |
| W/ | WITH |

UNLESS OTHERWISE NOTED, LINEAR DIMENSIONS SHOWN ARE IN MILLIMETERS.

| SYMBOL | DESCRIPTION | DATE | APR |
|---|---|---|---|

DESIGNED BY: TCP | DATE: 11-15-06
DWN BY: TCP | SUBMITTED BY: PHILIP J. PINELLO CHIEF, PDT PACILITIES DES
CHK BY: KGO | FILE NO.: AF0607 S-SB01GN

US Army Corps of Engineers
Transatlantic Programs Center

AFGHANISTAN NATIONAL POLICE (ANP) DISTRICT HEADQUARTERS COMPOUNDS - 1 STORY HQ
AFGHANISTAN
STANDARD DETAILS
GENERAL NOTES AND ABBREVIATIONS

SHEET REFERENCE NUMBER:
SS-1

11/14/2006
h:\projects\afghanistan\af0607\gener\str\AF0607S-SB01GN.dwg

## SPLICES

LOCATION OF SOME SPLICES ARE SHOWN ON DRAWINGS. SPLICES NOT SHOWN ON DRAWINGS SHALL BE IN ACCORDANCE WITH THE APPLICABLE REQUIREMENTS FOR DETAILING REINFORCEMENT AND AS APPROVED BY THE CONTRACTING OFFICER.

WHEN REINFORCEMENT OF DIFFERENT SIZE SPLICES, THE LAP LENGTH IS GOVERNED BY THE SMALLER BAR UNLESS NOTED OTHERWISE.

WALL AND SLAB REINFORCEMENT SPLICES ARE TO BE MADE SO THAT REQUIRED CLEARANCES ARE MAINTAINED.

| TENSION LAP SPLICES | | |
|---|---|---|
| AS (PROVIDED) / AS (REQUIRED) | MAXIMUM % OF REBARS SPLICED WITHIN REQ. LAP LENGTH | |
| | 50 | 100 |
| EQUAL TO OR GREATER THAN 2 | CLASS A | CLASS B |
| LESS THAN 2 | CLASS B | CLASS B |

TENSION LAP SPLICE LENGTH SHALL BE AS FOLLOWS:

FOR CLASS "A" SPLICES 1.0 ld
FOR CLASS "B" SPLICES 1.3 ld

WHERE ld IS THE BASIC TENSION DEVELOPMENT LENGTH.

BASIC TENSION DEVELOPMENT ld (mm)& TENSION DOWEL EMBEDMENT LENGTH

| CONCRETE | TYPE OF BARS | BAR SIZE | | | | | | | | |
|---|---|---|---|---|---|---|---|---|---|---|
| | | #3 | #4 | #5 | #6 | #7 | #8 | #9 | #10 | #11 |
| 4000 PSI | TOP BARS | 400 | 500 | 600 | 700 | 800 | 1000 | 1200 | 1600 | 2000 |
| | OTHER | 300 | 400 | 450 | 600 | 600 | 750 | 950 | 1200 | 1500 |

NOTES:
1. FOR BARS WITH CLEAR SPACING NOT LESS THAN 5X BAR DIAMETER AND WITH COVER FROM FACE OF MEMBER TO EDGE BARS, MEASURED IN THE PLANE OF THE BARS, NOT LESS THAN 2.5X BAR DIAMETER USE 0.8ld, BUT THE LAP SPLICE LENGTH SHALL NOT BE LESS THAN 300MM.

2. TOP BARS ARE HORIZONTAL AND INCLINED REINFORCING BARS SO PLACED THAT MORE THAN 300MM. OF CONCRETE IS CAST IN THE MEMBER BELOW THE BARS.

STANDARD COMPRESSION LAP SPLICE LENGTH (MM)

| BAR SIZE | #3 | #4 | #5 | #6 | #7 | #8 | #9 | #10 | #11 |
|---|---|---|---|---|---|---|---|---|---|
| SPLICE LENGTH | 300 | 380 | 480 | 580 | 660 | 760 | 860 | 960 | 1070 |

BASIC COMPRESSION DEVELOPMENT (MM) & COMPRESSION DOWEL EMBEDMENT LENGTH

| CONCRETE | BAR SIZE | | | | | | | | |
|---|---|---|---|---|---|---|---|---|---|
| | #3 | #4 | #5 | #6 | #7 | #8 | #9 | #10 | #11 |
| 4000 PSI | 200 | 250 | 300 | 360 | 420 | 480 | 550 | 610 | 680 |

ALL BARS MARKED CONTINUOUS SHALL BE PROPERLY LAPPED AT SPLICES AND CORNERS AND HOOKED AT NON-CONTINUOUS ENDS.
AN

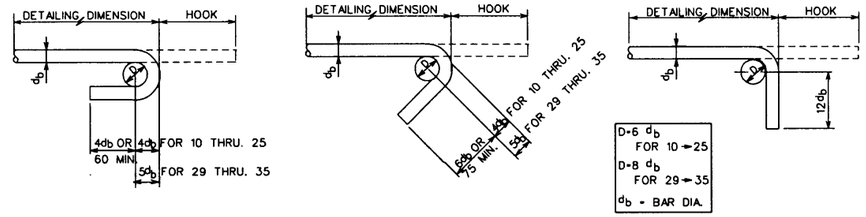


BAR BENDING DETAILS

| EQUIVALENT REINFORCING BAR SIZE CHART | |
|---|---|
| ACI DESIGNATION | METRIC DIAMETER (MM) |
| #3 | 10 |
| #4 | 13 (ø 12 ACCEPTABLE) |
| #5 | 16 |
| #6 | 19 (ø 20 ACCEPTABLE) |
| #7 | 22 |
| #8 | 25 |
| #9 | 29 |
| #10 | 32 |
| #11 | 35 |

| EQUIVALENT STEEL FABRIC SIZE CHART | | |
|---|---|---|
| WIRE REINFORCING INSTITUTE DESIGNATION | METRIC SIZES (MM) | |
| | WIRE SPACING | WIRE DIAMETER |
| 6 X 6 - W2.9 X W2.9 | 150 X 150 | 5.0 X 5.0 |

| FILLET WELD STRENGTH * | |
|---|---|
| SIZE INCHES | STRENGTH KIPS/INCH |
| 1/8 | 1.86 |
| 3/16 | 2.78 |
| 1/4 | 3.71 |
| 5/16 | 4.64 |
| 3/8 | 5.57 |
| 7/16 | 6.50 |
| 1/2 | 7.42 |
| 9/16 | 8.35 |

* AWS A5.1 OR A5.5 E70 XX ELECTRODES FOR A36 MATCHING BASE MATERIAL

DESIGN LOADS

SERVICE LOADS

DEAD ----------CALCULATED
LIVE ----------REFER TO INDIVIDUAL SHEETS

WIND LOAD

BASIC WIND VELOCITY IS 125 KM/H

EARTHQUAKE:
SITE SEISMICITY:
$S_S$ = 1.65g, $S_1$ = 0.75g

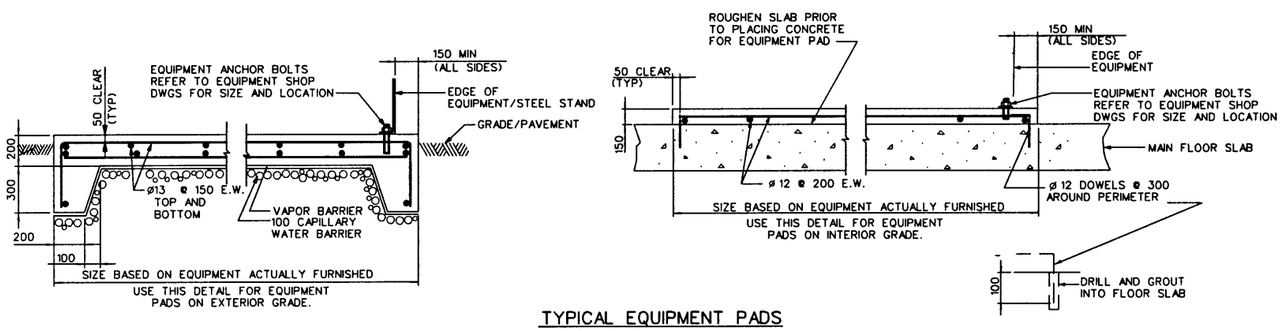


TYPICAL EQUIPMENT PADS
NOT TO SCALE

UNLESS OTHERWISE NOTED, LINEAR DIMENSIONS SHOWN ARE IN MILLIMETERS.

| SYMBOL | DESCRIPTION | DATE | APR |
|---|---|---|---|

DESIGNED BY: KGO | DATE: 11-15-06
DWN BY: KGO | SUBMITTED BY: PHILIP J. PINELLO CHIEF, PDT I FACILITIES DES.
CHK BY: KMP | FILE NO.: AF0607 $-SB02DT

US Army Corps of Engineers
Transatlantic Programs Center

AFGHANISTAN NATIONAL POLICE (ANP) DISTRICT HEADQUARTERS COMPOUNDS - 1 STORY HQ
AFGHANISTAN
STANDARD DETAILS
STANDARD DETAILS

SHEET REFERENCE NUMBER:
SS-2

11/14/2006
h:\projects\afghanistan\af0607\gener\str\AF0607$-SB02DT.dwg

| MASONRY LINTEL SCHEDULE | | | | |
|---|---|---|---|---|
| OPENING WIDTH | NOMINAL SIZE | REBAR BOTTOM | DETAIL | |
| 0-1800 | 200X200 | 2-Ø13 | A | |
| 1800-2000 | 200X200 | 2-Ø16 | A | |
| 2000-2200 | 200X200 | 2-Ø19 | A | |
| 2200-4000 | 200X400 | 2-Ø13 | B | |
| 4000-4400 | 200X400 | 2-Ø16 | B | |
| 4400-4600 | 200X400 | 2-Ø19 | B | |

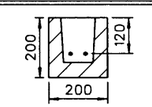


DETAIL-A

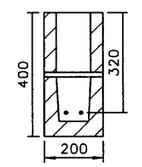


DETAIL-B

MASONRY NOTES:

1. WORK THIS SHEET WITH ARCHITECTURAL SHEETS.
2. PROVIDE JOINT REINFORCEMENT AT A MAXIMUM SPACING OF 400 MILLIMETERS ON CENTERS.
3. BOND BEAMS SHALL BE PROVIDED IN BOTH EXTERIOR AND INTERIOR WALLS AT A MAXIMUM SPACING OF 1.0 METERS AND/OR AS SHOWN. REINFORCE BOND BEAMS WITH 1-ø16 REBAR UNLESS OTHERWISE NOTED.
4. DISCONTINUE BOND BEAM AND JOINT REINFORCEMENT AT MASONRY CONTROL JOINTS UNLESS OTHERWISE NOTED.
5. NOT USED.
6. WHERE REINFORCEMENT FOR A BOND BEAM AND LINTEL ARE ALIGNED WITHIN A MASONRY COURSING EXTEND (OR OTHERWISE ANCHOR) REBAR FOR THE LINTEL A MINIMUM OF 600 MILLIMETERS BEYOND EACH FACE OF OPENING.
7. FOR WALLS USING 200 MILLIMETER WIDE MASONRY UNITS PROVIDE 1-ø16 VERTICALLY AT A MAXIMUM SPACING OF 1.0 METER ON CENTER UNLESS NOTED OTHERWISE.
8. PROVIDE 1-ø16 DOWEL AT EACH VERTICAL REINFORCING BAR IDENTIFIED FOR PLACEMENT IN NOTE 7. ABOVE. UNLESS NOTED OTHERWISE.
9. IN ADDITION TO THE VERTICAL REINFORCEMENT IDENTIFIED FOR PLACEMENT IN NOTE 7. ABOVE PROVIDE 1-ø16 REBAR ADJACENT TO MASONRY CONTROL JOINTS. SIDES OF WALL OPENINGS GREATER THAN ONE METER AND AT ABRUPT CHANGES IN WALL HEIGHT.
10. PROVIDE A MASONRY BOND TO INTERSECTING LOAD-BEARING WALLS AT CORNERS ONLY. WHERE A LOAD-BEARING WALL TERMINATES AT THE FACE OF ANOTHER LOAD-BEARING WALL. PROVIDE A CONTROL JOINT. FOR LATERAL SUPPORT BETWEEN SUCH WALLS PROVIDE STEEL Z ANCHORS. SPACED NOT MORE THAN 800mm ON CENTER VERTICALLY.
11. PROVIDE A MASONRY BOND TO INTERSECTING NONLOAD-BEARING WALLS OR PARTITIONS AT CORNERS ONLY. WHERE NONLOAD-BEARING WALLS OR PARTITIONS TERMINATE AT THE FACE OF ANOTHER WALL OR PARTITION PROVIDE A CONTROL JOINT. FOR LATERAL SUPPORT BETWEEN SUCH WALLS OR PARTITIONS PROVIDE STRIPS OF METAL LATH OR ONE-QUARTER INCH MESH SPACED NOT MORE THAN 400mm ON CENTER VERTICALLY.
12. PROVIDE MASONRY CONTROL JOINT LOCATIONS WITHOUT CUTTING BLOCK. MAXIMUM SPACING OF CONTROL JOINTS SHALL BE 7.2 METERS.
13. PROVIDE VERTICAL REINFORCEMENT OF 1 - Ø12 REBAR IN PARTITION/ NON - LOADBEARING WALLS AT 1800 mm ON CENTER. Ø12 DOWELS HAVING 300 mm LAP (COVER) IN MASONRY SHALL BE PROVIDED AT 1800 mm OC. WITH 200 HORIZONTAL HOOK IN SLAB. UNLESS OTHERWISE NOTED.

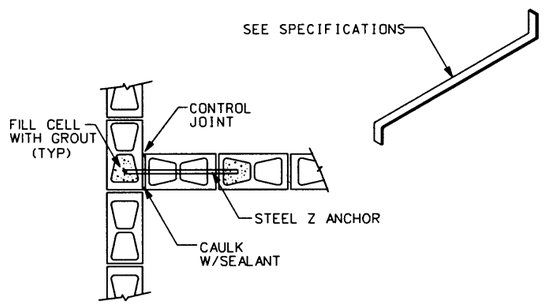


INTERSECTION OF WALLS OR PARTITIONS
SEE NOTES 10 AND 11

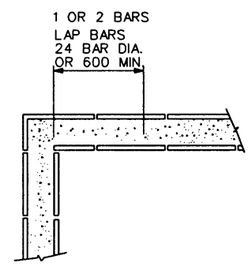


DETAIL OF BOND BEAM REINFORCING SPLICE AT CORNER
N.T.S.

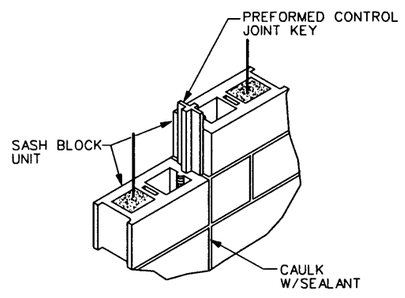


MASONRY CONTROL JOINT DETAILS

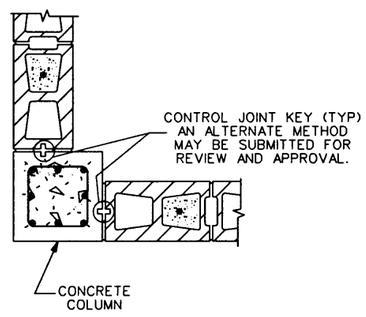


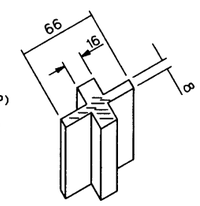


DETAIL- A
CONTROL JOINTS AT COLUMNS
N.T.S.

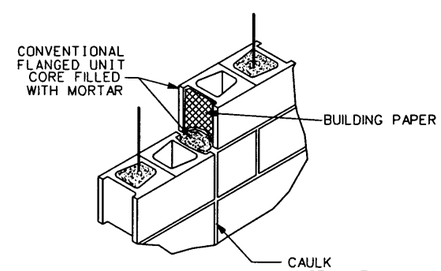


ALTERNATE-1

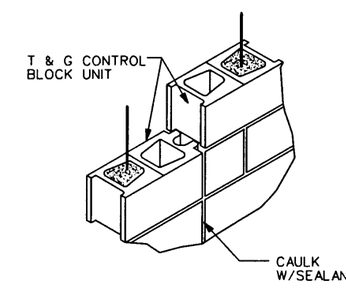


ALTERNATE-2

UNLESS OTHERWISE NOTED, LINEAR DIMENSIONS SHOWN ARE IN MILLIMETERS.

| SYMBOL | DESCRIPTION | DATE | APR |
|---|---|---|---|

DESIGNED BY: KGO | DATE: 11-15-06
DWN BY: KGO | SUBMITTED BY: PHILIP J. PINELLO CHIEF, PDT FACILITIES DES.
CHK BY: | FILE NO.: AF0607 #-SB03DT

US Army Corps of Engineers
Transatlantic Programs Center

AFGHANISTAN NATIONAL POLICE (ANP) DISTRICT HEADQUARTERS COMPOUNDS - 1 STORY HQ
AFGHANISTAN
STANDARD DETAILS
MASONRY NOTES AND DETAILS

SHEET REFERENCE NUMBER:
SS-3

11/14/2006
h:\projects\afghanistan\af0607\general\str\AF0607#-SB03DT.dwg

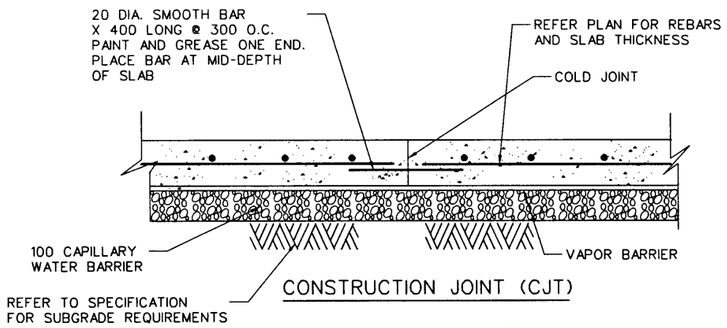


CONSTRUCTION JOINT (CJT)

DETAIL A
NTS
S-1 SS-7

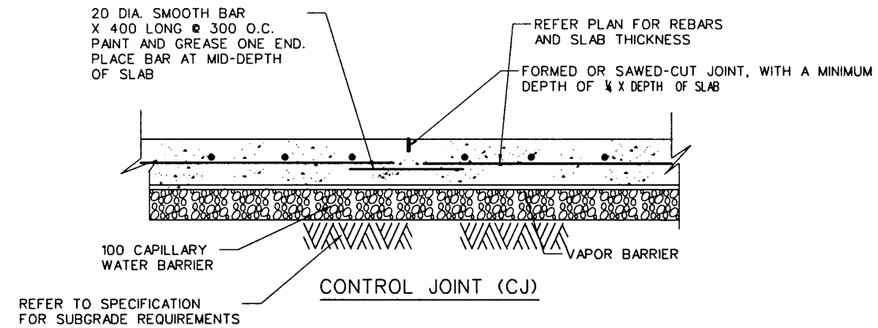


CONTROL JOINT (CJ)

DETAIL B
NTS
S-1 SS-7

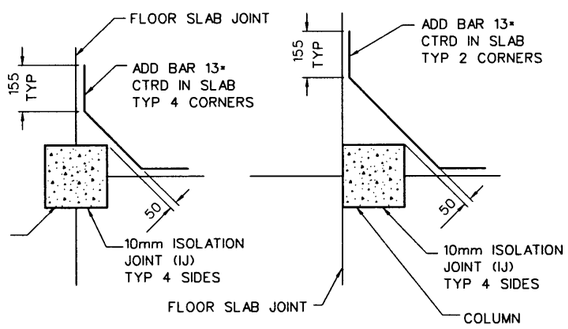


UNLESS OTHERWISE NOTED, LINEAR DIMENSIONS SHOWN ARE IN MILLIMETERS.

| SYMBOL | DESCRIPTION | DATE | APV |
|---|---|---|---|

DESIGNED BY: TCP
DATE: 11-15-06
DWN BY: TCP
SUBMITTED BY: PHILLIP PINELLO CHIEF, DIST FACILITIES DES.
CHK BY: KGO
FILE NO.: AF0607S-SB04DT

US Army Corps of Engineers
Transatlantic Programs Center

AFGHANISTAN NATIONAL POLICE (ANP) DISTRICT HEADQUARTERS COMPOUNDS - 1 STORY HQ
AFGHANISTAN
STANDARD DETAILS

DETAILS

SHEET REFERENCE NUMBER:
SS-4

11/14/2006
h:\projects\afghanistan\af0607\general\str\AF0607S-SB04DT.dwg

## LEGEND

- FLUORESCENT LIGHT FIXTURE, LETTER INDICATES FIXTURE MARK
- EXIT SIGN, TYPE F FIXTURE
- EMERGENCY LIGHT
- WP,S — DUPLEX SOCKET OUTLET (13A, 250V), BS 1363
  S - A/C OR WATER HEATER SWITCH-RECEPTACLE COMBINATION
  WP - WEATHERPROOF
- JUNCTION BOX
- S 3,WP — SWITCH, WP-WEATHERPROOF, 3-3 WAY, EP-EXPLOSION PROOF
- S — SWITCH
- SAFETY DISCONNECT SWITCH, SWITCH SHALL BE 1P, 20A UNO
- 1/3 — MOTOR (1/3 HP)
- LP-2 — HOMERUN, PNL LP, CIRCUIT 2
- COMBINATION LIGHTING AND POWER PANEL
- CIRCUIT BREAKER
- TELEPHONE/DATA OUTLET. SEE SHEET SE-5 FOR DETAIL MOUNTED 0.5m AFF
- W — SINGLE TELEPHONE ONLY OUTLET, WALL MOUNTED 1.2m AFF
- WALL MOUNTED CLOSED CIRCUIT TELEVISION (CCTV) CAMERA, FIXED TYPE UNLESS PAN-TILT-ZOOM (PTZ) IS INDICATED, MH 2.4M AFF UNO
- GROUND ROD (EARTH ELECTRODE), COPPER, 20mm DIA X 3.0m LENGTH

GENERAL NOTES:

1. REFER TO SECTION 01015 FOR ADDITIONAL / DETAIL REQUIREMENTS.

## LIGHTING FIXTURE SCHEDULE

* SEE LIGHTING FIXTURE DETAILS ON DRAWINGS SE-2 & SE-3

| FIXTURE MARK | LINE VOLT. | TYPE | LAMPS NO. | LAMPS WATTAGE | MOUNTING | REMARKS |
|---|---|---|---|---|---|---|
| A | 230 | 230 | 2 | 40 | SURFACE/PENDANT | INDUSTRIAL FLUORESCENT, WITH ELECTRONIC BALLAST |
| B | 240 | 232 | 2 | 40 | SURFACE | VAPORTIGHT FLUORESCENT |
| C | 240 | 603 | - | - | SURFACE | EMERGENCY BATTERY PACK |
| D | 240 | XL1 | 1 | 8, T5 | SURFACE/PENDANT | EXIT LIGHT |
| E | 240 | - | 1 | 1000 | - | SPOT LIGHT |

## ABBREVIATIONS

| | |
|---|---|
| AFG | ABOVE FINISHED GRADE |
| AFF | ABOVE FINISHED FLOOR |
| ACCU | AIR COOLED CONDENSING UNIT |
| A | AMPERE |
| AHU | AIR HANDLING UNIT |
| AIC | AMPERE INTERRUPTING CAPACITY |
| CHH | COMMUNICATIONS HANDHOLE |
| CKT | CIRCUIT |
| CMH | COMMUNICATIONS MANHOLE |
| C | CONDUIT |
| EF | EXHAUST FAN |
| EHH | ELECTRIC POWER HANDHOLE |
| EMH | ELECTRIC POWER MANHOLE |
| EP | EXPLOSION PROOF |
| ELCB | EARTH LEAKAGE CIRCUIT BREAKER |
| FACP | FIRE ALARM CONTROL PANEL |
| GFI | GROUND FAULT INTERRUPTING |
| GFCI | GOVERNMENT FURNISHED CONTRACTOR INSTALLED |
| HP | HORSEPOWER |
| HPS | HIGH PRESSURE SODIUM |
| HZ | HERTZ |
| KV | KILOVOLT |
| KW | KILOWATT |
| KVA | KILOVOLT-AMPERE |
| M | METERS |
| MBB | METERING BACK BOARD |
| MDF | MAIN DISTRIBUTION FRAME |
| MEW | HOST NATION MINISTRY OF ELECTRICITY AND WATER |
| MTD | MOUNTED |
| NIC | NOT IN CONTRACT |
| PH. Ø | PHASE |
| P | POLE |
| XXX | HOST NATION ARMED FORCES |
| TEL | TEL CO. |
| RM | ROOM |
| SN | SOLID NEUTRAL |
| TBB | TELEPHONE BACKBOARD |
| TCB | TELEPHONE CONNECTION BOX (BY TEL CO) |
| TYP. | TYPICAL |
| UNO | UNLESS NOTED OTHERWISE |
| V | VOLT |
| W | WIRE |
| WP | WEATHERPROOF |
| XFMR.T | TRANSFORMER |

| SYMBOL | DESCRIPTION | DATE | APR |
|---|---|---|---|

DESIGNED BY: MM | DATE: 11-15-06
DWN BY: MM | SUBMITTED BY: MICHAEL HOWELL, CHIEF, PDT BLDG SYSTEMS
CHK BY: MFH | FILE NO.: AF0607 8-ELO1GN

US Army Corps of Engineers
Transatlantic Programs Center

AFGHANISTAN NATIONAL POLICE (ANP) DISTRICT HEADQUARTERS COMPOUNDS - 1 STORY HQ
AFGHANISTAN
STANDARD DETAILS
LEGEND & ABBREVIATIONS

SHEET REFERENCE NUMBER:
SE-1

11/14/2006
h:\projects\afghanistan\af0607\general\ele\AF0607S-ELO1SN.DWG

## FIXTURE MARK A

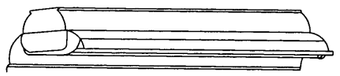

TYPE 230
SUSPENSION MOUNTED, INDUSTRIAL,
OPEN TYPE FLUORESCENT FIXTURE, 4-FOOT

| FIRST SUFFIX | SECOND-SUFFIX | DESCRIPTION |
|---|---|---|
| A | | TWO LAMPS |
| B | | THREE LAMPS |
| | 1 | 8 TO 15 PERCENT UPLIGHT |
| | 2 | 18 TO 25 PERCENT UPLIGHT |

FIXTURE SHALL CONFORM TO UL1570. STANDARD BALLAST(S) SHALL BE THE CLASS P, HIGH POWER FACTOR TYPE APPROVED FOR THE APPLICATION BY THE CERTIFIED BALLAST MANUFACTURERS. CHANNEL HOUSING, END FITTINGS, AND REFLECTOR SHALL BE CONSTRUCTED WITH DIE-FORMED, COLD-ROLLED STEEL. REFLECTOR FINISH SHALL BE PORCELIAN ENAMEL, BAKED WHITE ENAMEL OR ALUMINUM OXIDE. SOCKETS SHALL BE OF THE TYPE REQUIRING A FORCED MOVEMENT ALONG THE LONGITUDINAL AXIS OF THE LAMP FOR INSERTION AND REMOVAL OF THE LAMP. FIXTURE SHALL BE PREWIRED. FLUORESCENT TUBES SHALL BE PROTECTED BY A VIRGIN ACRYLIC PROTECTIVE SLEEVE AND CLEAR PLASTIC VENTED END CAPS.

## FIXTURE MARK B

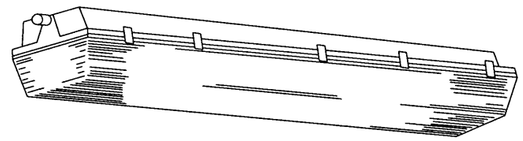

TYPE 232
4-FOOT FIXTURE LENGTH

TYPE 233
8-FOOT FIXTURE LENGTH

ENCLOSED AND GASKETED, VAPOR-TIGHT FLUORESCENT FIXTURE
FOR SURFACE OR PENDANT MOUNTING

FIXTURE SHALL CONFORM TO UL1570 AND SHALL BE VAPOR-TIGHT AND SUITABLE FOR USE IN WET LOCATIONS. FIXTURE SHALL HAVE ONE-PIECE HOUSINGOF MOLDED HIGH-IMPACT PLASTIC OR REINFORCED FIBERGLASS. HOUSING BODY SHALL HAVE AN INTERNAL, DIE-FORMED, COLD-ROLLED STEEL CHANNEL WITH COVER TO PROVIDE FIXTURE RIGIDITY AND TO CONTAIN ELECTRIC COMPONENTS. THE METAL CHANNEL AND COVER SHALL RECEIVE A RUST INHIBITIVE COATING BEFORE APPLICATION OF THE FINISH COAT, WHICH SHALL CONSIST OF BAKED WHITE ENAMEL OR PORCELAIN ENAMEL. THE LENS SHALL BE ONE PIECE, OF HIGH-IMPACT-RESISTANT ACRYLIC, AND SHALL HAVE SMOOTH EXTERIOR SURFACE AND STIPPLED OR PEBBLED INTERIOR SURFACE. THE LENS SHALL BE SECURED TO THE HOUSING WITH CAPTIVE MOLDED PLASTIC OR STAINLESS STEEL SPRING LATCHES. A CONTINUOUS GASKET SHALL BE PROVIDED TO FORM A VAPOR SEAL BETWEEN THE LENS AND THE FIXTURE BODY. ALL OPENINGS IN THE HOUSING FOR MOUNTING, CONDUIT, ETC., SHALL BE CAPABLE OF FORMING A VAPOR-TIGHT SEAL. BALLAST(S) SHALL BE COLD WEATHER TYPE FOR STARTING TEMPERATURES DOWN TO MINUS 20 DEGREES F. STANDARD BALLAST(S) SHALL BE THE CLASS P, HIGH POWER FACTOR TYPE APPROVED FOR THE APPLICATION BY THE CERTIFIED BALLAST MANUFACTURERS. FIXTURE SHALL BE PREWIRED, AND PROVIDED WITH LAMPS THAT ARE PROPERLY MATED TO THE BALLAST OPERATING CHARACTERISTICS.

## FIXTURE MARK C

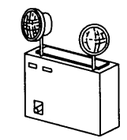

TYPE 603

UNIT SHALL CONFORM TO IEC 60598-2-22 AND SHALL HAVE AN IP20 RATED ENCLOSURE. THE UNIT SHALL BE RATED FOR USE AT VOLTAGE OF LIGHTING CIRCUIT. FIXTURE SHALL HAVE 2 x 20W TUNSGSTEN HALOGEN SPOT LIGHTS. FOLLOWING SUSTAINED LOSS OF THE NORMAL POWER SUPPLY, THE UNIT SHALL BE CAPABLE OF AUTOMATICALLY AND INSTANTANEOUSLY ILLUMINATING THE TWO 12-VOLT LIGHTING FIXTURES FOR A PERIOD OF NOT LESS THAN 3 HOURS AT A BATTERY VOLTAGE IN EXCESS OF 87.5 PERCENT OF THE NOMINAL VOLTAGE RATING.THE BATTERY SHALL BE DESIGNED TO BE MAINTENANCE FREE DURING THE EXPECTED BATTERY LIFE, AND SHALL BE WARRANTED FOR NOT LESS THAN 3 YEARS FROM THE DATE OF PURCHASE OF THE UNIT. AND SHALL BE FIELD REPLACEABLE WITHOUT REQUIRING REMOVAL OF OTHER COMPONENTS. THE BATTERY CHARGER SHALL BE THE SOLID-STATE TYPE AND SHALL PROVIDE A CONTINUOUS, VARIABLE, CURRENT LIMITED, FILTERED, AND REGULATED CHARGE RATE. THE BATTERY AND CHARGER SHALL BE CONTAINED IN A STEEL CABINET NOT LESS THAN 18 GAUGE THICKNESS WITH AN ENAMEL FINISH. UNLESS OTHERWISE APPROVED, WHICH SHALL BE EQUIPPED WITH A PUSH-TO-TEST SWITCH. MOUNTING BRACKETS OR SHELF SHALL BE PROVIDED. COMPLETE WITH ALL MOUNTING HARDWARE. ALL WITH A FINISH TO MATCH THE FINISH OR COLOR OF THE CABINET. THE UNIT SHALL BE PREWIRED AND EQUIPPED WITH TWO 12-VOLT, 20 WATT FLOODLIGHTS AS INDICATED.

## FIXTURE MARK D

TYPE: XL1

FEATURES
LAMP TYPE: LED
MOUNTING: UNIVERSAL
SHIELDING: FLAT SHEET ACRYLIC
LETTERS: GREEN

OTHER: BATTERY BACKUP TO MAINTAIN OPERATION FOR MINIMUM 3 HOUR DURATION

SIGN TO COMPLY WITH EN 60598-2.22
NOM. DIMENSIONS 300 mm X 200 mm X 44 mm

GENERAL DESCRIPTION
HOUSING: DIE-CAST ALUMINUM OR 20 GA. COLD ROLLED STEEL, HARDWARE FINISH TO MATCH HOUSING FINISH. 150 mm H LETTERS WITH 19 mm STROKE. DIRECTIONAL ARROWS AS REQUIRED

ELECTRICAL: 230 VOLT

FINISH: BLACK OR BRUSHED ALUMINUM

OTHER: MINIMUM BRIGHTNESS 20 CD/SQ METER ON FACE OF SIGN.

## FIXTURE MARK E

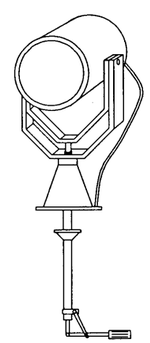

SEALED BEAM SPOTLIGHT, MOUNTED TO GUARD TOWER ROOF, WITH 1000 WATT HALOGEN NARROW SPOT PAR 56 LAMP. SPOTLIGHT SHALL BE PROVIDED WITH TWIST LEVER CONTROL, MINIMUM 10" DIAMETER LIGHT HEAD, WORKING RANGE OF 1/2 MILE, COUPLING FOR OPERATION FROM GUARD TOWER PLATFORM AND RATED FOR OUTDOOR ROUGH SERVICE.

FIXTURE TYPE INDICATED ON THIS SHEET SHALL ALSO CONFORM TO REQUIREMENTS SPECIFIED AND INDICATED IN THE CONTRACT DOCUMENTS.

UNLESS OTHERWISE NOTED, LINEAR DIMENSIONS SHOWN ARE IN MILLIMETERS.

| SYMBOL | DESCRIPTION | DATE | APPD |
|---|---|---|---|

DESIGNED BY: MM
DATE: 11-15-06
DWN BY: MM
SUBMITTED BY: MICHAEL HOWELL CHIEF, PDT BLDG SYSTEMS
CHK BY: MFH
FILE NO.: AF0607&-EL02DT

US Army Corps of Engineers
Transatlantic Programs Center

AFGHANISTAN NATIONAL POLICE (ANP) DISTRICT HEADQUARTERS COMPOUNDS - 1 STORY HQ
AFGHANISTAN
STANDARD DETAILS
STANDARD LIGHTING DETAILS

SHEET REFERENCE NUMBER:
SE-2

11/14/2006
h:\projects\afghanistan\af0607\general\ele\AF0607&-EL02DT.DWG

# APPENDIX B

# TEMPLATE FORMAT GUIDANCE ONLY

APPENDIX B

# TEMPLATE FORMAT GUIDANCE ONLY

FACTOR 1

PAST EVALUATIONS/ PERFORMANCE

**The following projects are to be the same projects submitted under Factor 2 Experience.**

1. Project Name & Location:

2. Customer Point of Contact: (Note: the Government may contact this customer to verify the information provided on this form)
   Name:
   Address:
   Phone number:
   Email Address:

3. Problems encountered and corrective actions taken:

4. List Change Orders and their circumstances:

5. Project scheduled Completion date Actual Completion date:
   IF the above dates are different, explain reason for the change:

6. Initial Project Budget (US Dollars)
   Final Actual Project cost (US Dollars)
   IF the above dates are different, explain reason for the change:

7. Safety record and accident reports:

8. References: Submit the following, Customer Satisfaction letters, Letters of Appreciation, Performance Evaluations, Certification of Achievements, Letters of Recommendations.

(Note: A neutral rating with unknown risk will be assigned IF no past performance is submitted)

# TEMPLATE FORMAT GUIDANCE ONLY

FACTOR 2

EXPERIENCE

a. Project Name & Location:

b. Contract Number if applicable:

c. Project type: Construction: (Y/N) Design: (Y/N) Design/Build: (Y/N)

d. Project owner's name:
Address:
Telephone:
eMail:

e. Prime Contractor: (Y/N) Sub-Contractor: (Y/N)

f. Project completion Date:

g. Construction Cost:

h. Brief explanation that illustrates your design/build capabilities and relevant experiences:

# TEMPLATE FORMAT GUIDANCE ONLY

FACTOR 3

PROJECT MANAGEMENT PLAN

1. Provide an Organizational Chart: (include key personnel Names and their titles)
   a. Show the key design personnel
   b. Show the key construction personnel
   c. Show other firms involved such as partnerships and sub-contractors if applicable
   d. Show the relationship between the quality control and health & safety personnel, project level management and corporate management

2. Explain the quality control process for design:

3. Explain quality control management throughout the construction process including;
   a. Testing
   b. Inspection
   c. Safety

4. Explain how interactions with the Corps of Engineers and the roles that different team members will play when dealing with;
   a. Resolving problems with modifications to the contract (design and/or construction)
   b. Resolving potential design and/or construction delays
   c. Reviewing and approving submittals
   d. Attending progress meetings
   e. Facilitating contract completion and closeouts
   f. Explain process to control cost over runs while maintaining the project budget during design and construction.

This portion of the contractor's proposal shall be limited to no more than 10 pages. Pages beyond 10 pages may not be evaluated.

# TEMPLATE FORMAT GUIDANCE ONLY

## CONTRACTOR'S ORGANIZATIONAL CHART

*Notes:*

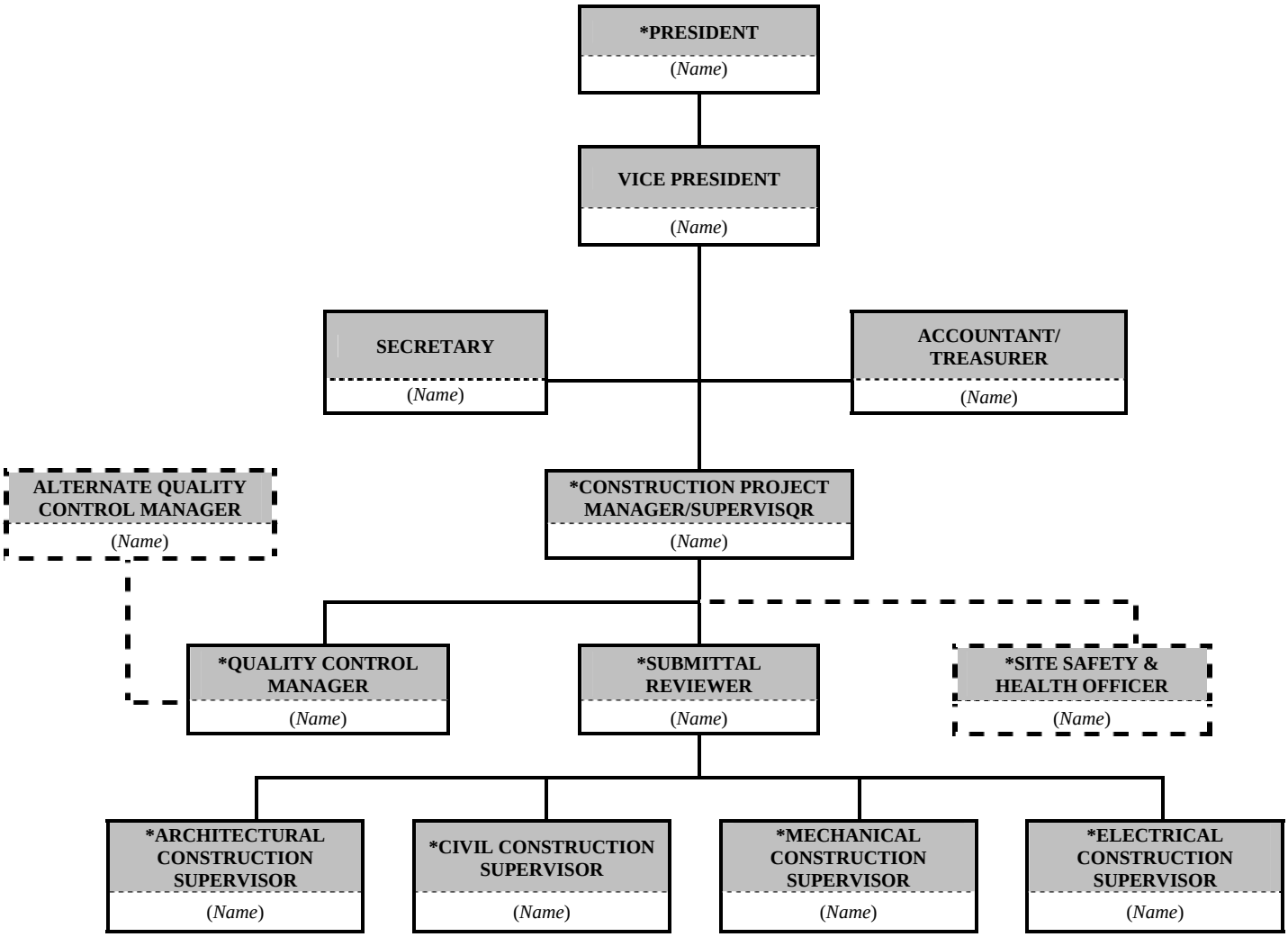


1. *This is only a sample of Organizational Chart. Actual personnel, assignments, and flow chart shall be adapted and provided by the Offeror. As a minimum requirement, assignments with asterisk (*) are considered as "Key Personnel".*
2. *Additional Charts from Sub-Contractor(s), and/or Partnership or Joint Venture from other Contractor(s) may be submitted in separate sheet(s).*

# TEMPLATE FORMAT GUIDANCE ONLY

FACTOR 4

PESONNEL & EQUIPMENT RESOURCES PLAN

SUB-FACTOR 1: PERSONNEL for the following:

- Project Manager for design and for construction
- Quality Control Manager
- Project Architect
- Senior Structural Engineer
- Senior Civil Engineer
- Senior Mechanical Engineer
- Senior Electrical Engineer
- Safety Officer
- Construction Superintendent or Manager
- Construction Foreman (if different from above)
- Safety Manager

All key personnel shall have a minimum of **five** years of professional experience. The following information is required for each of the key personnel below: Information to be provided for key personnel should be limited to no more than **one page** per person.

a. Name:
b. Project Title:
c. Project Responsibilities:
d. Years of Experience: with this Company:with other firms:
e. Education: Degree(s) Year:Specialization:
f. Active Registration:First year Registered:
g. Other relevant experiences & qualifications:

- How many or the percentage of the Afghan ktrs & laborers who will be working on this project:

SUB-FACTOR 2: EQUIPMENT

List of equipment, facilities and other resources available for this project: