AMENDMENT OF SOLICITATION/MODIFICATION OF CONTRACT

1. CONTRACT ID CODE	PAGE OF PAGES	
	1	46

2. AMENDMENT/MODIFICATION NO.	3. EFFECTIVE DATE	4. REQUISITION/PURCHASE REQ. NO.	5. PROJECT NO.(If applicable)
0001	21-Mar-2007		

6. ISSUED BY	CODE W917PM	7. ADMINISTERED BY (If other than item 6)	CODE
AFGHANISTAN ENGINEER DISTRICT US ARMY CORPS OF ENGINEERS KABUL APO AE 09356		**See Item 6**	

8. NAME AND ADDRESS OF CONTRACTOR (No., Street, County, State and Zip Code)			
		X	9A. AMENDMENT OF SOLICITATION NO. W917PM-07-R-0056
		X	9B. DATED (SEE ITEM 11) 14-Mar-2007
			10A. MOD. OF CONTRACT/ORDER NO.
			10B. DATED (SEE ITEM 13)
CODE	FACILITY CODE		

11. THIS ITEM ONLY APPLIES TO AMENDMENTS OF SOLICITATIONS

[X] The above numbered solicitation is amended as set forth in Item 14. The hour and date specified for receipt of Offer [ ] is extended, [X] is not extended.

Offer must acknowledge receipt of this amendment prior to the hour and date specified in the solicitation or as amended by one of the following methods: (a) By completing Items 8 and 15, and returning 1 copies of the amendment; (b) By acknowledging receipt of this amendment on each copy of the offer submitted; or (c) By separate letter or telegram which includes a reference to the solicitation and amendment numbers. FAILURE OF YOUR ACKNOWLEDGMENT TO BE RECEIVED AT THE PLACE DESIGNATED FOR THE RECEIPT OF OFFERS PRIOR TO THE HOUR AND DATE SPECIFIED MAY RESULT IN REJECTION OF YOUR OFFER. If by virtue of this amendment you desire to change an offer already submitted, such change may be made by telegram or letter, provided each telegram or letter makes reference to the solicitation and this amendment, and is received prior to the opening hour and date specified.

12. ACCOUNTING AND APPROPRIATION DATA (If required)

13. THIS ITEM APPLIES ONLY TO MODIFICATIONS OF CONTRACTS/ORDERS. IT MODIFIES THE CONTRACT/ORDER NO. AS DESCRIBED IN ITEM 14.

[ ] A. THIS CHANGE ORDER IS ISSUED PURSUANT TO: (Specify authority) THE CHANGES SET FORTH IN ITEM 14 ARE MADE IN THE CONTRACT ORDER NO. IN ITEM 10A.

[ ] B. THE ABOVE NUMBERED CONTRACT/ORDER IS MODIFIED TO REFLECT THE ADMINISTRATIVE CHANGES (such as changes in paying office, appropriation date, etc.) SET FORTH IN ITEM 14, PURSUANT TO THE AUTHORITY OF FAR 43.103(B).

[ ] C. THIS SUPPLEMENTAL AGREEMENT IS ENTERED INTO PURSUANT TO AUTHORITY OF:

[ ] D. OTHER (Specify type of modification and authority)

E. IMPORTANT: Contractor [ ] is not, [ ] is required to sign this document and return _____ copies to the issuing office.

14. DESCRIPTION OF AMENDMENT/MODIFICATION (Organized by UCF section headings, including solicitation/contract subject matter where feasible.)

Six (6) Afghanistan National Police (ANP) Ghow r and Herat Provinces

Section 01015 Technical Requirements delete in its entirety and replace w ith Revised Section 01015 Technical requirements.

Delete Draw ing in its entirety and replace w ith Revised Draw ings.

All other terms and conditions remain unchanged.

Except as provided herein, all terms and conditions of the document referenced in Item 9A or 10A, as heretofore changed, remains unchanged and in full force and effect.

15A. NAME AND TITLE OF SIGNER (Type or print)		16A. NAME AND TITLE OF CONTRACTING OFFICER (Type or print) TEL: EMAIL:	
15B. CONTRACTOR/OFFEROR (Signature of person authorized to sign)	15C. DATE SIGNED	16B. UNITED STATES OF AMERICA BY (Signature of Contracting Officer)	16C. DATE SIGNED 21-Mar-2007

Afghanistan National Police (ANP)

Headquarters (2 Story) Compound

Afghanistan

US Army Corps
of Engineers
Transatlantic Programs Center

09 March 2007

AF0701--cvr

DRAWING INDEX

SHT.REF. NO.	FILE NO.	REVISIONS REV. NO.	REVISIONS AM/COP NO.	TITLE
	AF0701--GI01GN			DRAWING INDEX
				SITE DESIGN
C-1	AF0701--CI01PN			SITE PLAN
C-2	AF0701--CI02DT			DETAILS
C-3	AF0701--CI03DT			DETAILS
C-4	AF0701--CI04DT			WELL PLAN AND SECTION
C-5	AF0701--CI05DT			WELL PLAN DETAILS
C-6	AF0701--CI06DT			BOOSTER STATION SECTION
C-7	AF0701--CI07DT			PIPING DETAILS
C-8	AF0701--CI08DT			STANDARD PLUMBING DETAILS
C-9	AF0701--CI09DT			SEPTIC TANK DETAILS
XM-1	AF0701--MS01PN			MECHANICAL SITE PLAN
XM-2	AF0701--MS02DI			FUEL OIL SCHEMATIC
XE-1	AF0701--ES01PN			ELECTRICAL SITE PLAN
XE-2	AF0701--ES02DI			ONE LINE DIAGRAM
				POLICE HEADQUARTERS (A)
A-1	AF0701A-AR01PN			FIRST FLOOR PLAN
A-2	AF0701A-AR02PN			SECOND FLOOR PLAN
A-3	AF0701A-AR03EL			BUILDING ELEVATIONS
A-4	AF0701A-AR04SE			BUILDING SECTION
A-5	AF0701A-AR05PN			ROOF PLAN
A-6	AF0701A-AR06SC			DOOR SCHEDULE
A-7	AF0701A-AR07SC			FINISH SCHEDULE
S-1	AF0701A-SB01PN			FOUNDATION PLAN
S-2	AF0701A-SB02PN			FIRST FLOOR STRUCTURAL PLAN
S-3	AF0701A-SB03PN			LOWER ROOF STRUCTURAL PLAN
S-4	AF0701A-SB04PN			UPPER ROOF STRUCTURAL PLAN
S-5	AF0701A-SB05SE			INTERIOR TYPICAL STAIRWAY
S-6	AF0701A-SF06DT			SLAB-ON-GRADE DETAILS
S-7	AF0701A-SF07DT			ROOF BEAM AND STRUCTURAL SLAB DETAILS
S-8	AF0701A-SB08DT			STANDARD BEAM AND COLUMN DETAIL
M-1	AF0701A-MH01PN			FIRST FLOOR HVAC PLAN
M-2	AF0701A-MH02PN			SECOND FLOOR HVAC PLAN
M-3	AF0701A-MH03PN			FIRST FLOOR HEATING PLAN
M-4	AF0701A-MH04PN			SECOND FLOOR HEATING PLAN
M-5	AF0701A-MH05PN			PARTIAL ROOF PLAN
P-1	AF0701A-MP01PN			FIRST FLOOR PLUMBING PLAN
P-2	AF0701A-MP02PN			SECOND FLOOR PLUMBING PLAN
P-3	AF0701A-MP03LS			FIRST FLOOR ENLARGED TOILET PLANS-WTR SUPPLY
P-4	AF0701A-MP04LS			SECOND FLOOR ENLRGED TOILET PLANS-WTR SUPPLY
P-5	AF0701A-MP05LS			FIRST FLOOR ENLARGED TOILET PLANS-WASTE & VENT
P-6	AF0701A-MP06LS			SECOND FLOOR ENLARGED TOILET PLANS-WASTE & VENT
P-7	AF0701A-MP07DI			WATER SUPPLY RISER DIAGRAM
P-8	AF0701A-MP08SC			PLUMBING SCHEDULES
E-1	AF0701A-EL01PN			FIRST FLOOR LIGHTING PLAN
E-2	AF0701A-EL02PN			SECOND FLOOR LIGHTING PLAN
E-3	AF0701A-EP03PN			FIRST FLOOR POWER PLAN
E-4	AF0701A-EP04PN			SECOND FLOOR POWER PLAN
E-5	AF0701A-EL05PN			GROUNDING AND LIGHTNING PROTECTION PLAN
E-6	AF0701A-EP06SC			PANEL SCHEDULES
E-7	AF0701A-EP07SC			PANEL SCHEDULES
TC-1	AF0701A-TC01PN			FIRST FLOOR COMMUNICATIONS PLAN
TC-2	AF0701A-TC02PN			SECOND FLOOR COMMUNICATIONS PLAN

SHT.REF. NO.	FILE NO.	REVISIONS REV. NO.	REVISIONS AM/COP NO.	TITLE
				GUARD HOUSE (D)
A-1	AF0701D-AR01PN			BUILDING PLANS & ELEVATIONS
A-2	AF0701D-AR02SC			ROOM/FINISH SCHEDULES
S-1	AF0701D-SB01PN			FOUNDATION AND SLAB PLAN ROOF FRAMING PLAN
S-2	AF0701D-SB02DT			FOOTING DETAILS
S-3	AF0701D-SF03DT			SLAB-ON-GRADE DETAILS
S-4	AF0701D-SB04DT			ROOF BEAM AND STRUCTURAL SLAB DETAILS
M-1	AF0701D-MH01PN			HVAC PLAN
E-1	AF0701D-EL01PN			LIGHTING & POWER PLAN
				GUARD TOWER (E)
A-1	AF0701E-AR01PN			FLOOR PLANS AND ELEVATIONS
S-1	AF0701E-SB01PN			FOUNDATION AND SLAB PLAN ROOF FRAMING PLAN
S-2	AF0701E-SB02DT			FOOTING DETAILS
S-3	AF0701E-SF03DT			SLAB-ON-GRADE DETAILS
S-4	AF0701E-SF04DT			ROOF BEAM AND STRUCTURAL SLAB DETAILS
M-1	AF0701E-MH01PN			HVAC PLAN
E-1	AF0701E-EL01PN			LIGHTING & POWER PLAN
				GUARD SHACK (F)
A-1	AF0701F-AR01PN			FLOOR PLANS AND ELEVATIONS
S-1	AF0701F-SB01PN			FOUNDATION AND SLAB PLAN ROOF FRAMING PLAN
S-2	AF0701F-SB02DT			FOOTING DETAILS
S-3	AF0701F-SF03DT			SLAB-ON-GRADE DETAILS
S-4	AF0701F-SF04DT			ROOF BEAM AND STRUCTURAL SLAB DETAILS
M-1	AF0701F-MH01PN			HVAC PLAN
E-1	AF0701F-EL01PN			LIGHTING & POWER PLAN

SYMBOL	DESCRIPTION	DATE	APP

US Army Corps of Engineers
Transatlantic Programs Center

AFGHANISTAN NATIONAL POLICE HEADQUARTERS (2 STORY) COMPOUND
AFGHANISTAN
DRAWING INDEX SHEET 1

DRAWING INDEX

SHT.REF. NO.	FILE NO.	REVISIONS REV. NO.	REVISIONS AM/COP NO.	TITLE
	AF0701--GI02GN			DRAWING INDEX
				SUNSHADE (G)
A-1	AF0701G-AR01PN			FLOOR PLANS AND BUILDING ELEVATIONS
S-1	AF0701G-SB01PN			STRUCTURAL PLAN AND DETAILS
E-1	AF0701G-EL01PN			LIGHTING AND POWER PLAN
				WELL HOUSE BUILDING (H)
A-1	AF0701H-AR01PN			FLOOR PLAN/ELEVATION/SCHEDULE
S-1	AF0701H-SB01PN			FOUNDATION PLAN AND ROOF PLAN
S-2	AF0701H-SB02DT			FOOTING DETAILS
S-3	AF0701H-SF03DT			SLAB-ON-GRADE DETAILS
S-4	AF0701H-SB04DT			ROOF BEAM AND STRUCTURAL SLAB DETAILS
M-1	AF0701H-MH01PN			HVAC PLAN
E-1	AF0701H-EL01PN			LIGHTING AND POWER PLAN
E-2	AF0701H-EP02SC			PANEL SCHEDULES
				BOOSTER PUMP HOUSE (I)
A-1	AF0701I-AR01PN			BUILDING/ELEVATION DOOE/FINISH SCHEDULES
S-1	AF0701I-SB01PN			FOUNDATION, SLAB AND ROOF PLAN
S-2	AF0701I-SB02DT			FOOTING DETAILS
S-3	AF0701I-SF03DT			SLAB-ON-GRADE DETAILS
S-4	AF0701I-SF04DT			ROOF BEAM AND STRUCTURAL SLAB DETAILS
P-1	AF0701I-MN01PN			HVAC AND PLUMBING PLANS
E-1	AF0701I-EL01PN			LIGHTING AND POWER PLAN
E-2	AF0701I-EP02SC			PANEL SCHEDULES
				WATER TANK (J)
S-1	AF0701J-SB01PN			FOUNDATION PLAN AND TOP COVER SLAB PLAN
S-2	AF0701J-SB02SE			WATER STORAGE TANK SECTION AND DETAILS
S-3	AF0701J-SB03SE			SECTION AND DETAILS

SHT.REF. NO.	FILE NO.	REVISIONS REV. NO.	REVISIONS AM/COP NO.	TITLE
				STANDARD DETAILS
SA-1	AF0701S-AR01GN			SYMBOLS AND ABBREVIATIONS
SA-2	AF0701S-AR02DT			DOOR DETAILS AND WALL SECTION
SA-3	AF0701S-AR03DT			WALL TYPES
SA-4	AF0701S-AR04EL			WINDOW DETAILS
SS-1	AF0701S-SB01GN			GENERAL NOTES
SS-2	AF0701S-SB02GN			NOTATIONS AND BAR DEVELOPMENT LENGTHS
SS-3	AF0701S-SB03DT			MASONRY DETAILS
SS-4	AF0701S-SB04DT			SLAB-ON-GRADE DETAILS
SS-5	AF0701S-SB05DT			JOINT DETAILS
SS-6	AF0701S-SB06DT			EXTRA REINFORCING AT OPENINGS AND CORNERS
SM-1	AF0701S-MH01GN			LEGEND AND ABBREVIATIONS
SM-2	AF0701S-MH02SC			MECHANICAL SCHEDULES
SM-3	AF0701S-MH03DT			MECHANICAL STANDARD DETAILS
SP-1	AF0701S-MP01GN			LEGEND AND ABBREVIATIONS
SP-2	AF0701S-MP02DT			STANDARD PLUMBING DETAILS
SE-1	AF0701S-EL01GN			LEGENDS AND ABBREVIATIONS
SE-2	AF0701S-EL02DT			STANDARD LIGHTING DETAILS
SE-3	AF0701S-EL03DT			STANDARD LIGHTING DETAILS
SE-4	AF0701S-EL04DT			DUCTBANK DETAILS
SE-5	AF0701S-EL05DT			STANDARD ELECTRICAL DETAILS
SE-6	AF0701S-EL06DT			POWER PLAND DETAILS
SE-7	AF0701S-EL07DT			LIGHTNING PROTECTION DETAILS
SE-8	AF0701S-EL08DT			HAND HOLE DETAILS

SYMBOL	DESCRIPTION	DATE	APP

US Army Corps of Engineers
Transatlantic Programs Center

AFGHANISTAN NATIONAL POLICE HEADQUARTERS (2 STORY) COMPOUND
AFGHANISTAN
DRAWING INDEX SHEET 2

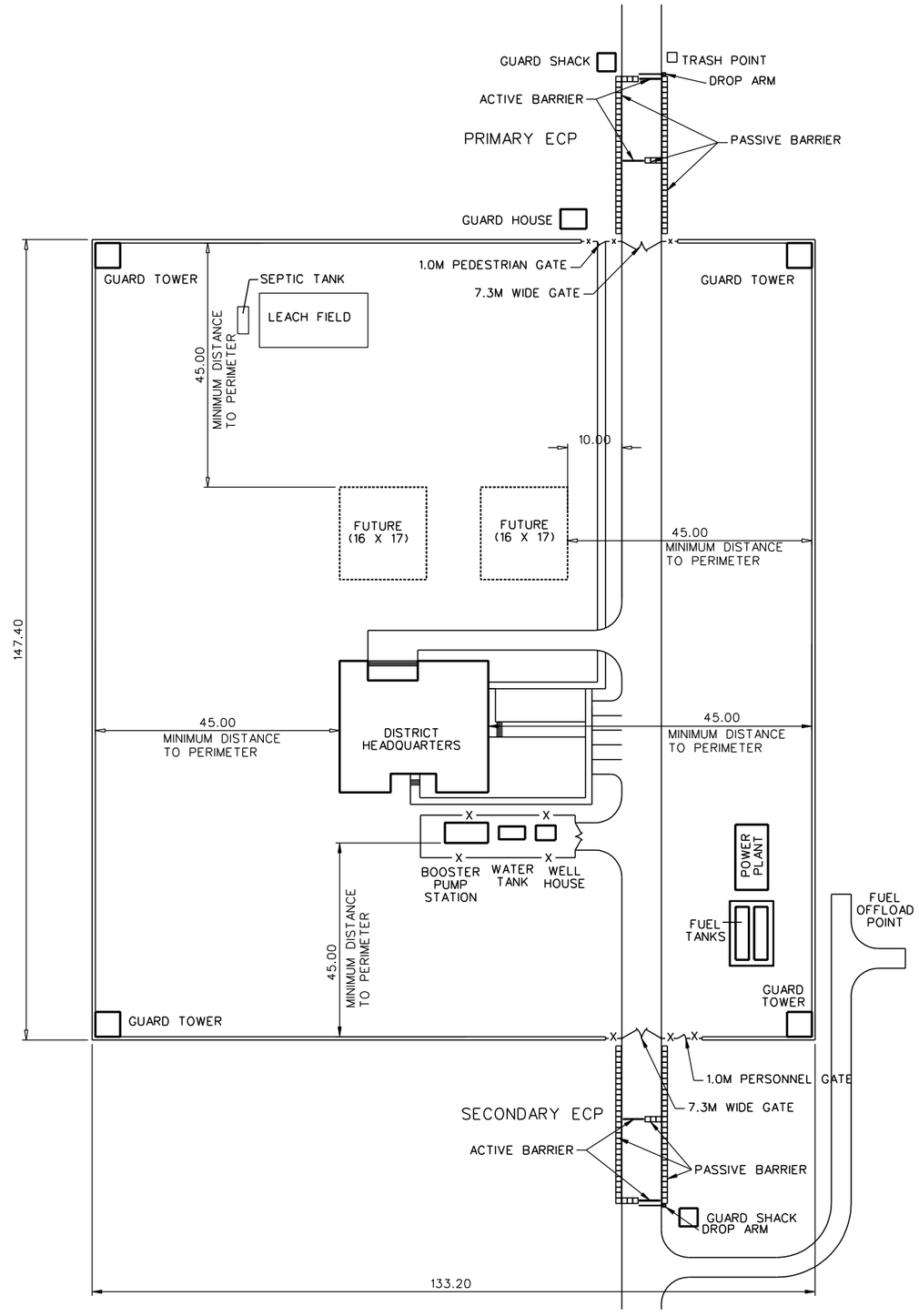

10 0 10 20 30 40
1:500

SYMBOL	DESCRIPTION	DATE	APP

DESIGNED BY: MW
DATE: 02-05-07
DWN BY: TSR
SUBMITTED BY: R. KORTYOHANN CHIEF, PDT SITE DEV.
CHK BY: REK
FILE NO.: AF0701--C101PN

US Army Corps of Engineers
Transatlantic Programs Center

AFGHAN NATIONAL POLICE HEADQUARTERS (2 STORY) COMPOUND
AFGHANISTAN
SITE DESIGN
SITE PLAN

SHEET REFERENCE NUMBER:
C-1

3/9/2007
h:\projects\afghanistan\af0701\af0701\civ\af0701--c01pn2.dwg

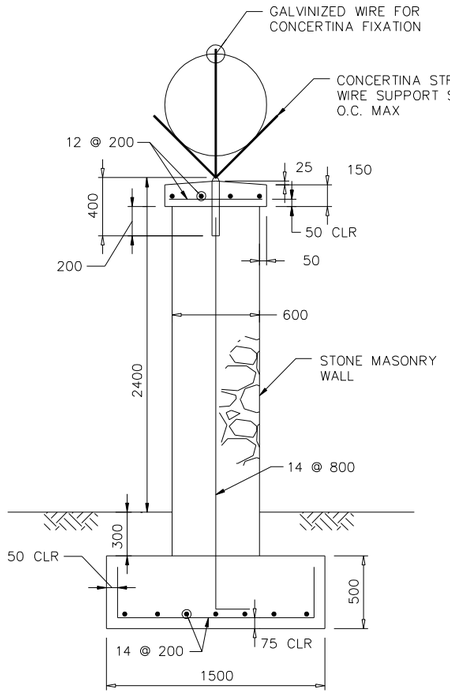

SECTION A
NOT TO SCALE

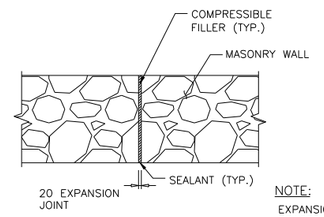

NOTE:
EXPANSION JOINTS SHALL BE SPACED A MAXIMUM OF 40,000.

STONE WALL
EXPANSION JOINT DETAIL
NOT TO SCALE

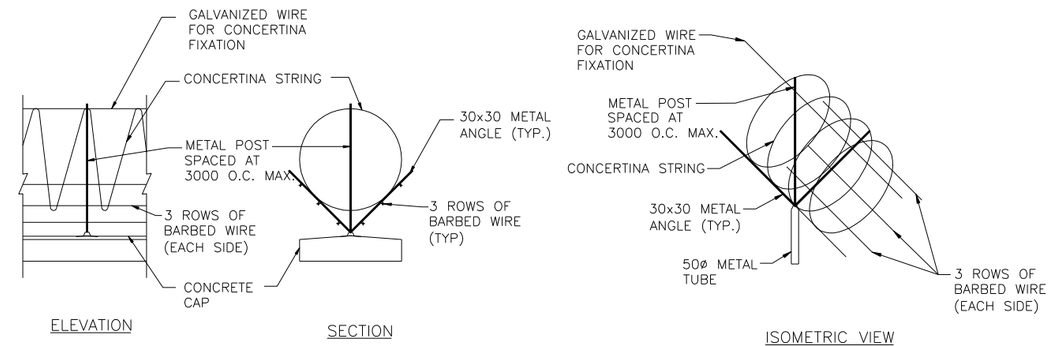

ELEVATION

SECTION

ISOMETRIC VIEW

CONCERTINA STRING & BARBED WIRE DETAILS
NOT TO SCALE

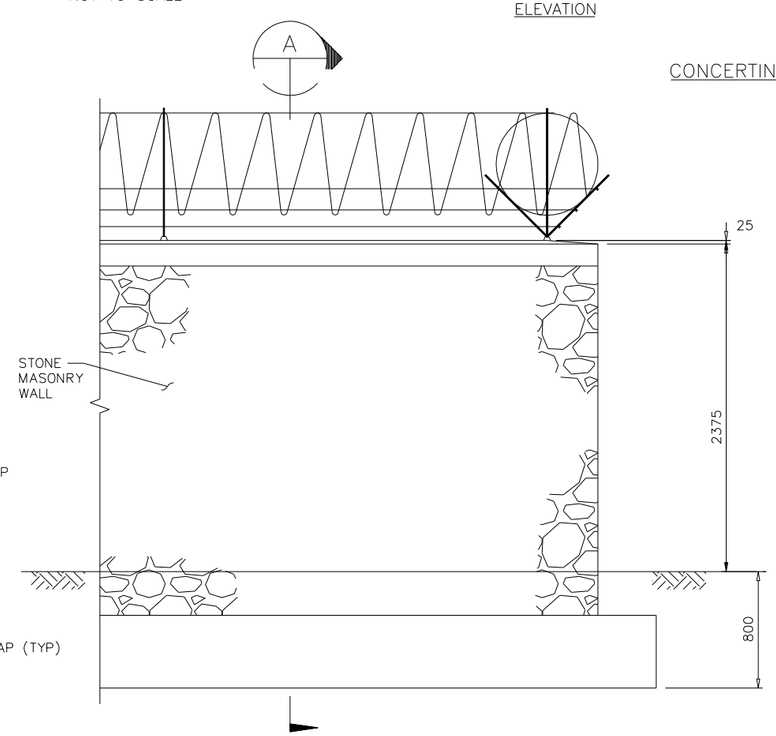

ELEVATION B
NOT TO SCALE

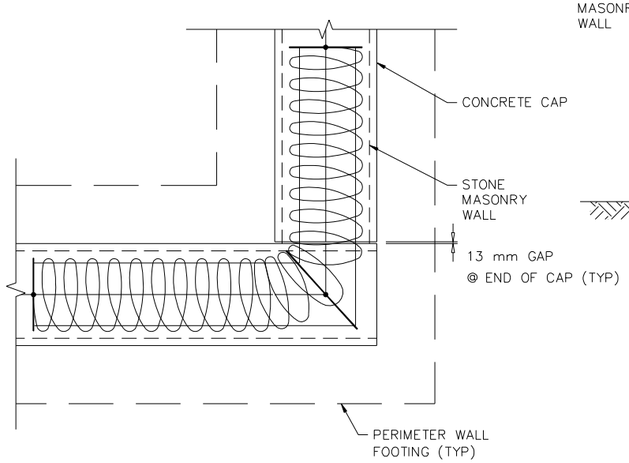

PERIMETER – STONE WALL CORNER – PLAN
(END CONDITION SIMILAR)
NOT TO SCALE

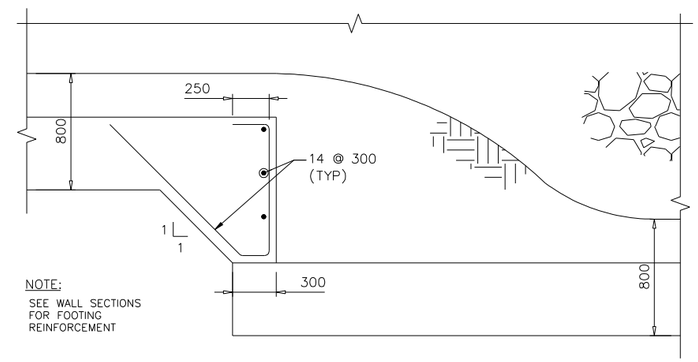

NOTE:
SEE WALL SECTIONS FOR FOOTING REINFORCEMENT

STEPPED FOOTING DETAIL FOR
GRADE CHANGE GREATER THAN 15 DEGREES
NOT TO SCALE

SYMBOL	DESCRIPTION	DATE	APP.

DESIGNED BY: MW
DATE: 02-05-07
DWN BY: TSR
SUBMITTED BY: R. KORTYOHANN CHIEF, PDT SITE DEV.
CHK BY: REK
FILE NO.: AF0701 --CI02DT

US Army Corps of Engineers
Transatlantic Programs Center

AFGHAN NATIONAL POLICE HEADQUARTERS (2 STORY) COMPOUND
AFGHANISTAN
SITE DESIGN
DETAILS

SHEET REFERENCE NUMBER:
C-2

3/9/2007
h:\projects\afghanistan\af0701\af0701\civ\af0701--ci02dt.dwg

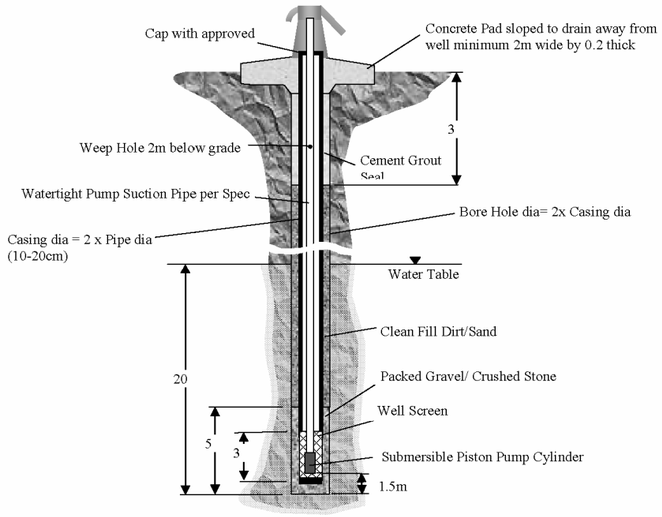

Sample Well Installation Drawing

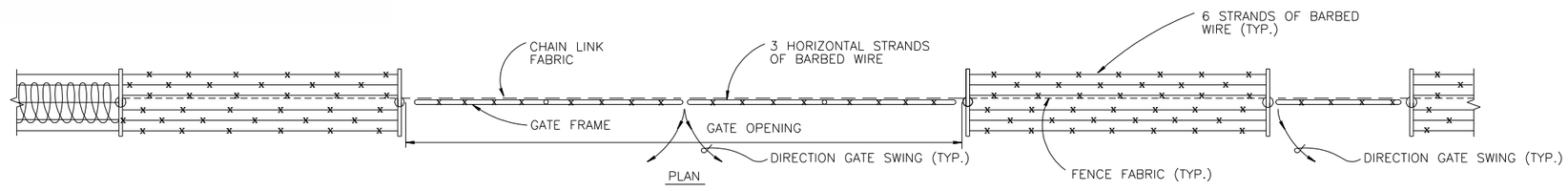

PLAN

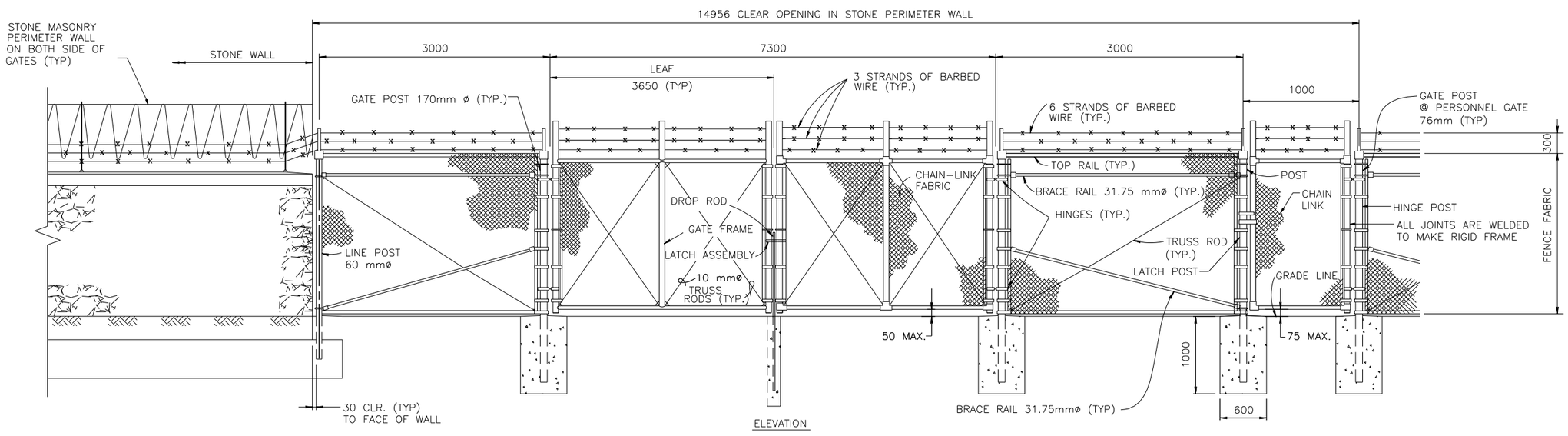

ELEVATION

DOUBLE SWING GATE
NTS

PERSONNEL GATE
NTS

SYMBOL	DESCRIPTION	DATE	APP

DESIGNED BY: MW
DATE: 02-05-07
DWN BY: TSR
SUBMITTED BY: R. KORTYOHANN CHIEF, PDT SITE DEV.
CHK BY: REK
FILE NO.: AF0701 --CI03DT

US Army Corps of Engineers
Transatlantic Programs Center

AFGHAN NATIONAL POLICE HEADQUARTERS (2 STORY) COMPOUND
AFGHANISTAN
SITE DESIGN
DETAILS

SHEET REFERENCE NUMBER:
C-3

3/9/2007
h:\projects\afghanistan\af0701\af0701\civ\af0701--ci03dt.dwg

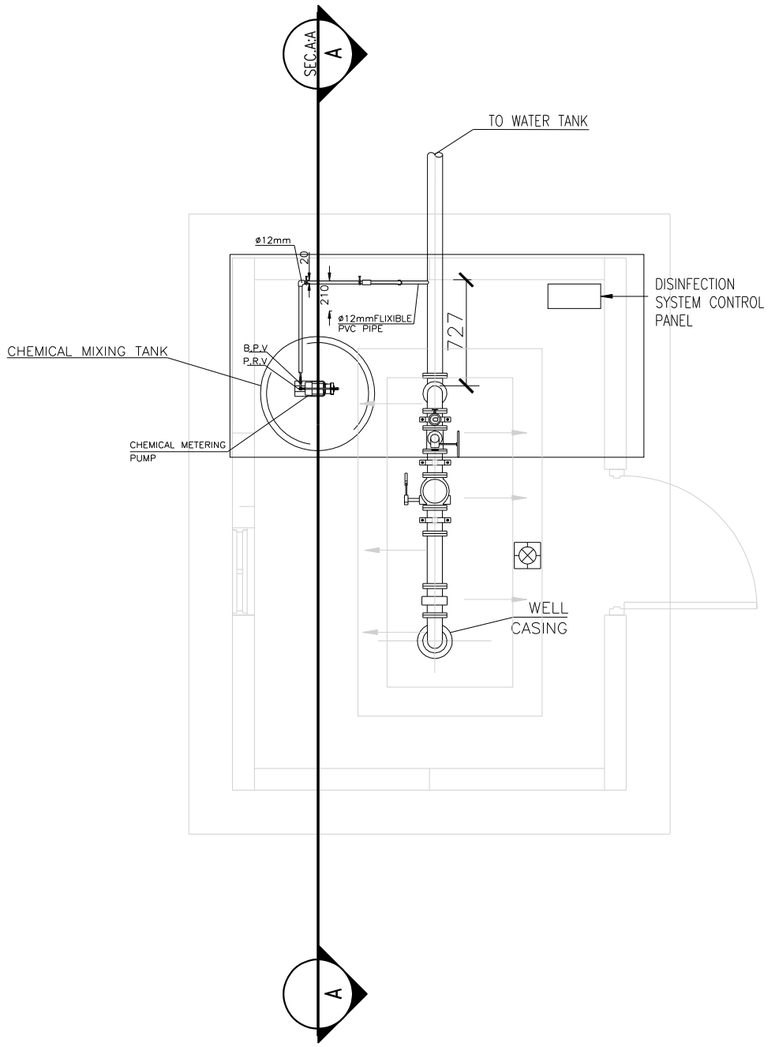

FLOOR PLAN
NOT TO SCALE

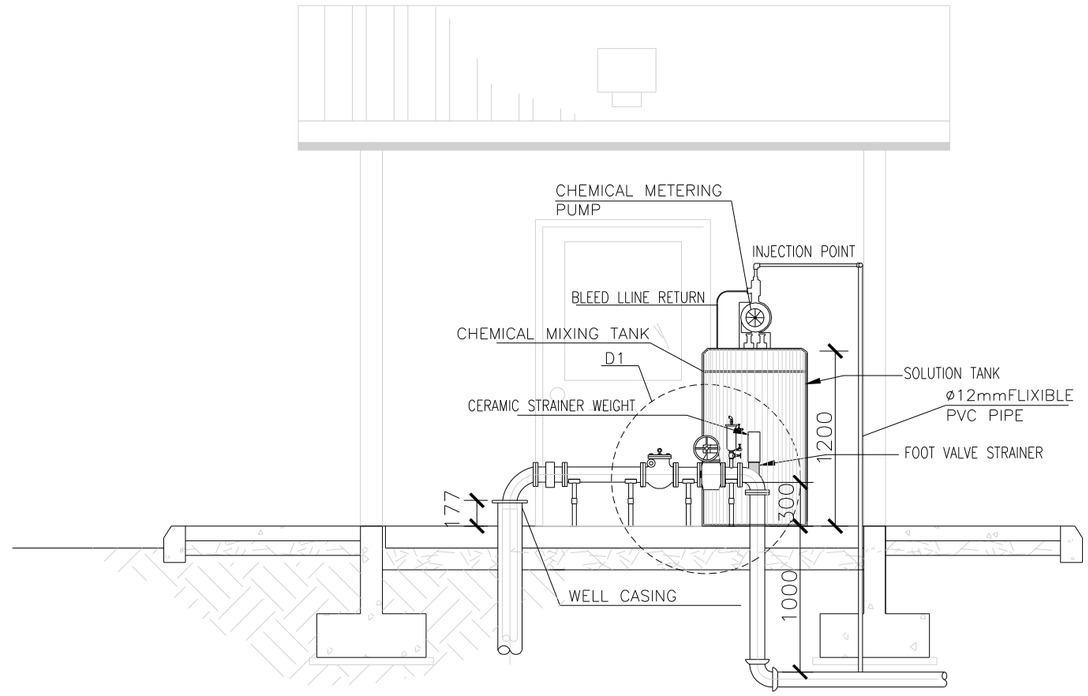

SECTION A-A
NOT TO SCALE

SYMBOL	DESCRIPTION	DATE	APP

DESIGNED BY: MW
DATE: 02-05-07
DWN BY: TSR
SUBMITTED BY: R. KOIRTYOHANN CHIEF, PDT SITE DEV.
CHK BY: REK
FILE NO.: AF0701 --CI04DT

US Army Corps of Engineers
Transatlantic Programs Center

AFGHAN NATIONAL POLICE HEADQUARTERS (2 STORY) COMPOUND
AFGHANISTAN
SITE DESIGN
WELL PLAN AND SECTION

SHEET REFERENCE NUMBER:
C-4

UNLESS OTHERWISE NOTED, LINEAR DIMENSIONS SHOWN ARE IN MILLIMETERS.

3/9/2007
h:\projects\afghanistan\af0701\af0701\civ\af0701--ci04dt02.dwg

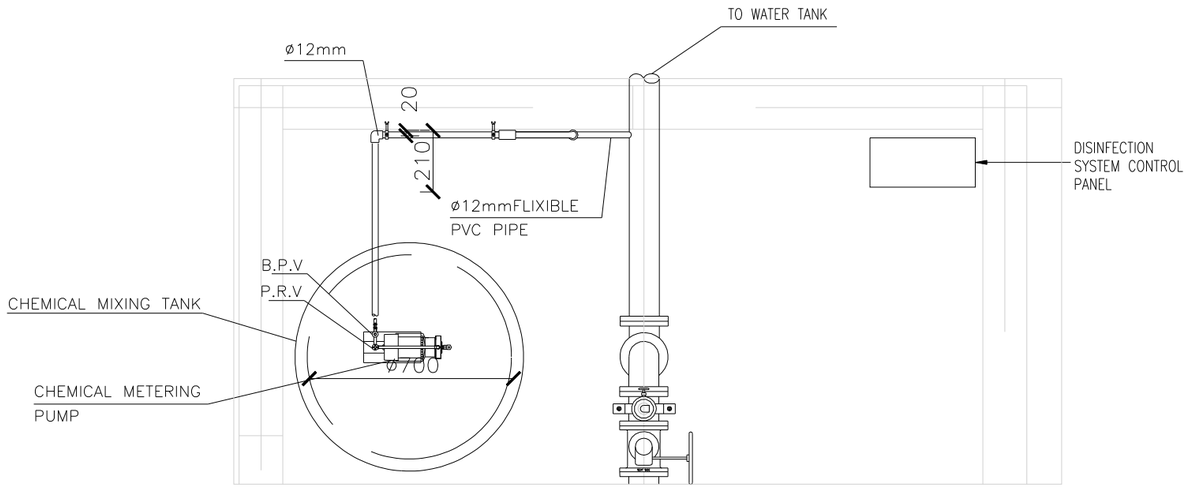

DETAIL 2
NOT TO SCALE

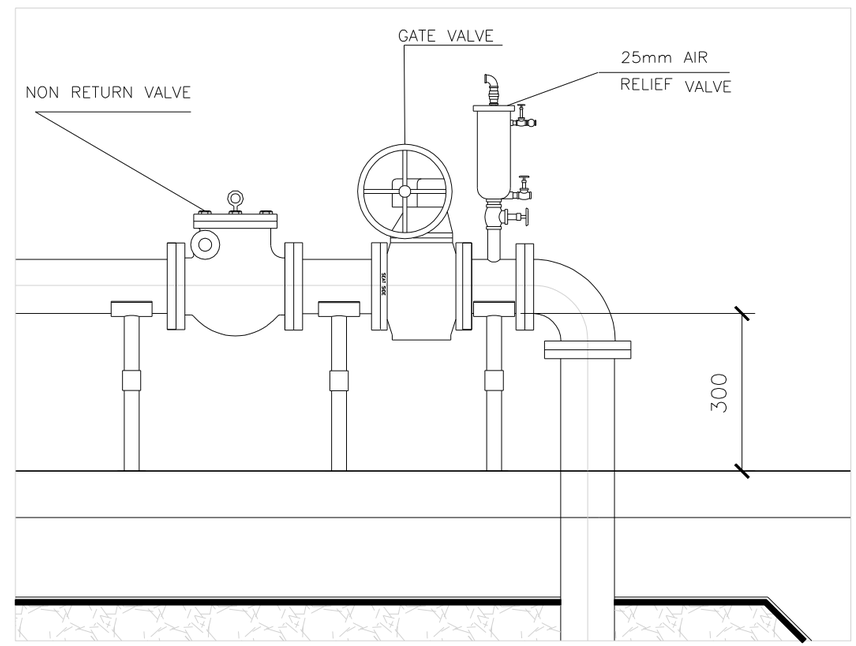

DETAIL 1
NOT TO SCALE

UNLESS OTHERWISE NOTED, LINEAR DIMENSIONS SHOWN ARE IN MILLIMETERS.

SYMBOL	DESCRIPTION	DATE	APP'D

DESIGNED BY: MW
DATE: 02-05-07
DWN BY: TSR
SUBMITTED BY: R. KORTYOHANN CHIEF, PDT SITE DEV
CHK BY: REK
FILE NO.: AF0701--CI05DT

US Army Corps of Engineers
Transatlantic Programs Center

AFGHAN NATIONAL POLICE HEADQUARTERS (2 STORY) COMPOUND
AFGHANISTAN
SITE DESIGN
WELL PLAN DETAILS

SHEET REFERENCE NUMBER:
C-5

3/9/2007
h:\projects\afghanistan\af0701\af0701\civ\af0701--ci05dt.dwg

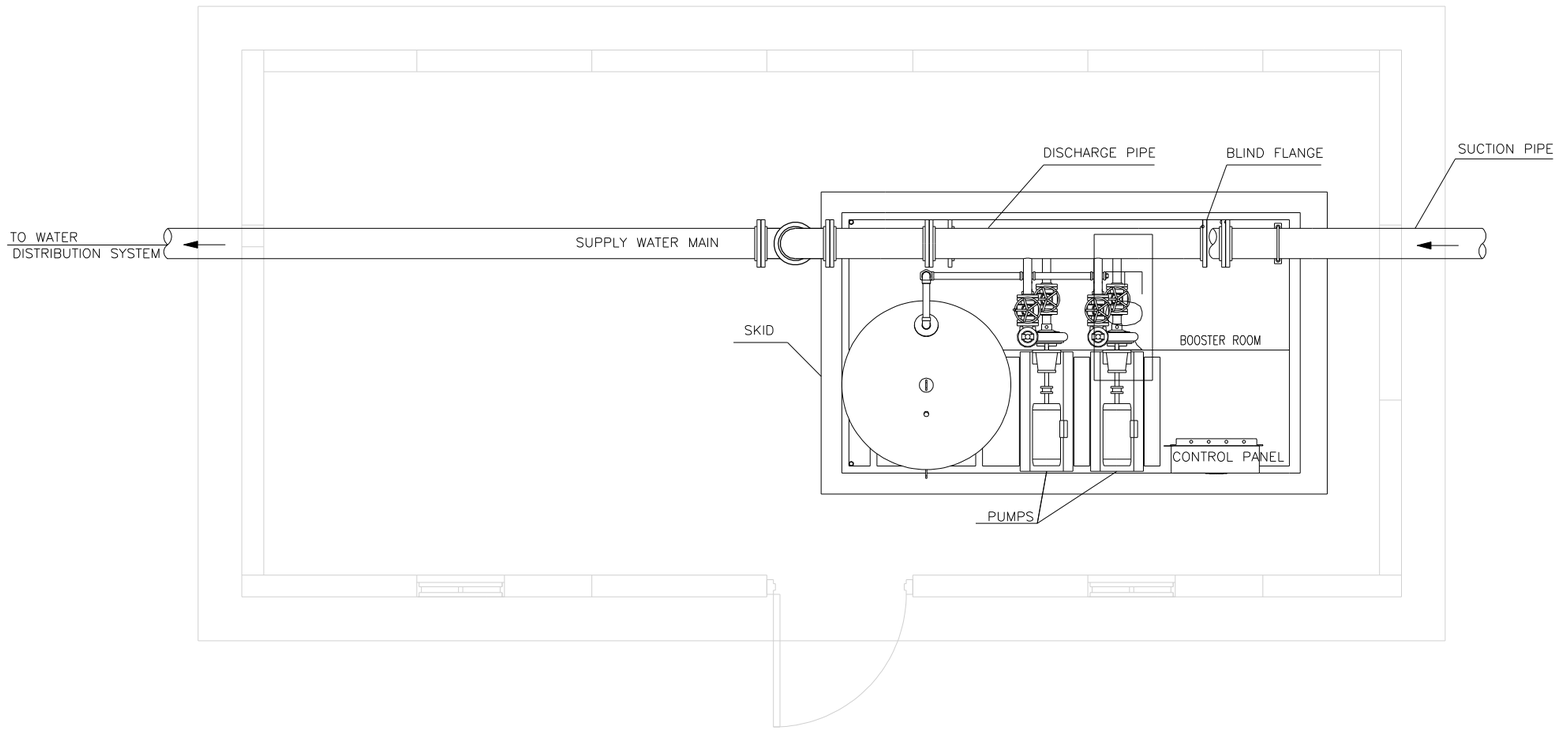

BOOSTER STATION DETAIL

NTO TO SCALE

UNLESS OTHERWISE NOTED, LINEAR DIMENSIONS SHOWN ARE IN MILLIMETERS.

SYMBOL	DESCRIPTION	DATE	APP

DESIGNED BY: MW
DATE: 02-05-07
DWN BY: TSR
SUBMITTED BY: R. KORTYOHANN CHIEF, PDT SITE DEV.
CHK BY: REK
FILE NO.: AF0701--CI06DT

US Army Corps of Engineers
Transatlantic Programs Center

AFGHAN NATIONAL POLICE HEADQUARTERS (2 STORY) COMPOUND
AFGHANISTAN
SITE DESIGN
BOOSTER STATION SECTION

SHEET REFERENCE NUMBER:
C-6

3/9/2007
h:\projects\afghanistan\af0701\af0701\civ\af0701--ci06dt.dwg

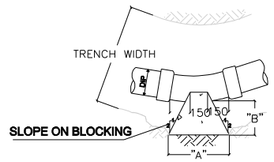

PLAN VIEW

NOTE:
VERTICAL HIGHT "C" DIMENSION

45°	A	B	C
50	100	NOTE 9	300
75	200	NOTE 9	400
100	300	NOTE 9	400
150	500	NOTE 9	500

22 1/2°	A	B	C
50	100	NOTE 9	200
75	200	NOTE 9	300
100	200	NOTE 9	300
150	400	NOTE 9	400

BLOCKING DETAIL FOR 22 ½° & 45° BENDS

SCALE :NTS

D1

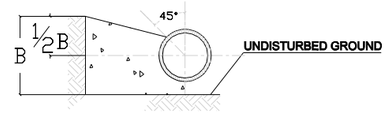

BENDS & TEES

SCALE 1:20

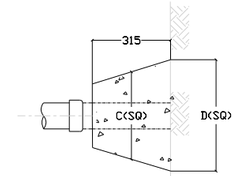

PLUG DETAIL

SCALE 1:20

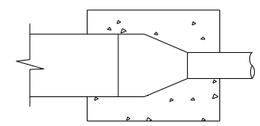

REDUCER DETAIL

SCALE 1:20

D2

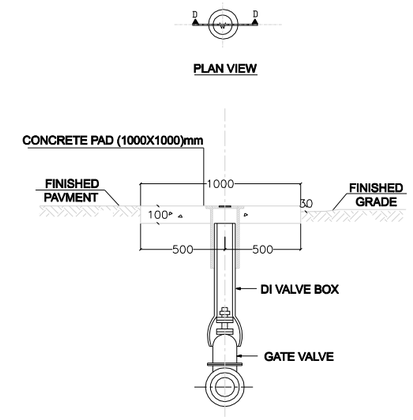

CROSS SECTION

INLINE VALVE BLOCKING DETAIL

SCALE :NTS

D3

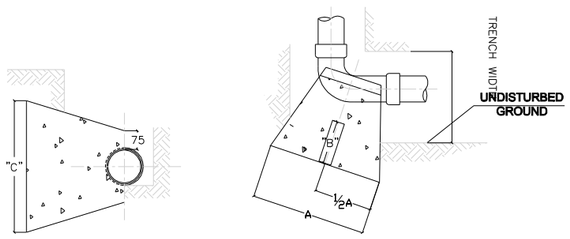

CROSS SECTION PLAN VIEW

90°	A	B	C
50	200	NOTE 9	300
75	300	NOTE 9	400
100	400	NOTE 9	500
150	600	NOTE 9	700

BLOCKING DETAIL FOR 90° ELBOWS

SCALE :NTS

D4

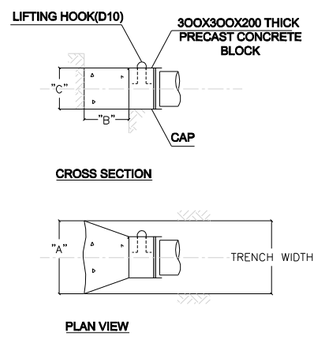

CROSS SECTION

PLAN VIEW

	A	B	C
50	200	NOTE 9	300
75	300	NOTE 9	400
100	300	NOTE 9	500
150	500	NOTE 9	700

BLOCKING DETAIL FOR DEADEND AND BRANCHES

SCALE :NTS

D5

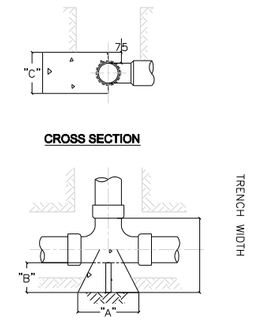

CROSS SECTION

PLAN VIEW

TEE	A	B	C
50	200	NOTE 9	300
75	300	NOTE 9	400
100	300	NOTE 9	500
150	500	NOTE 9	700

BLOCKING DETAIL FOR TEE

SCALE :NTS

D6

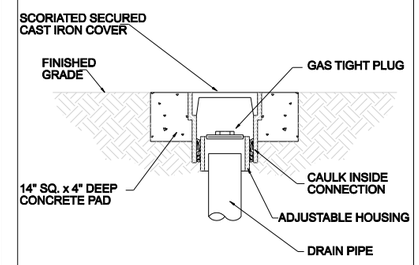

CLEANOUT TO GRADE

SCALE. NTS

D7

NOTE

1. REACTION BEARING AREAS SHALL BE IN A VERTICAL PLAN IN THE TRENCH SIDE AT AN ANGLE OF 90° TO THE THRUST VECTOR.
2. CONCRETE BLOCKING IS TO BE FORMED TO ENSURE ACCESSIBILITY TO FITTING AND POURED AGAINST UNDISTURBED EARTH.
3. FITTING ARE TO COMPLETELY WRAPPED WITH PLASTIC,PRIOR TO POURING CONCRETE.
4. CONCRETE SHALL BE 20 MPa.
5. CONCRETE SHALL NOT CONTACT BOLTS OR ENDS OF MECHANICAL JOINT FITTINGS.
6. TRENCHES SHALL CONFORM TO STANDARD BEDDING DETAIL
7. NOT USED
8. ALL BENDS AND INTERSECTION SHALL HAVE CONCRETE THRUST BLOCKING .
9. USE ONE HALF TRENCH WIDTH PLUS 75mm.

UNLESS OTHERWISE NOTED, LINEAR DIMENSIONS SHOWN ARE IN MILLIMETERS.

SYMBOL	DESCRIPTION	DATE	APP

DESIGNED BY: MW
DATE: 02-05-07
DWN BY: TSR
SUBMITTED BY: R. KOIRTYOHANN CHIEF, PDT SITE DEV
CHK BY: REK
FILE NO.: AF0701--CI07DT

US Army Corps of Engineers
Transatlantic Programs Center

AFGHAN NATIONAL POLICE HEADQUARTERS (2 STORY) COMPOUND
AFGHANISTAN
SITE DESIGN
PIPING DETAILS

SHEET REFERENCE NUMBER:
C-7

3/9/2007
h:\projects\afghanistan\af0701\af0701\civ\af0701--ci07dt.dwg

NOTE: Hand tamp the backfill fully at the sides of the pipe while tamping lightly over the crown. Hand tamping should continue until a minimum thickness of 300mm has been placed over the pipe.

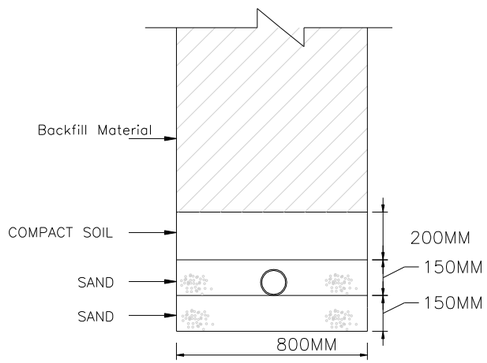

FOR WATER PIPES

NOTE: Hand tamp the backfill fully at the sides of the pipe while tamping lightly over the crown.Hand tamping should continue until a minimum thickness of 300mm has been placed over the pipe.

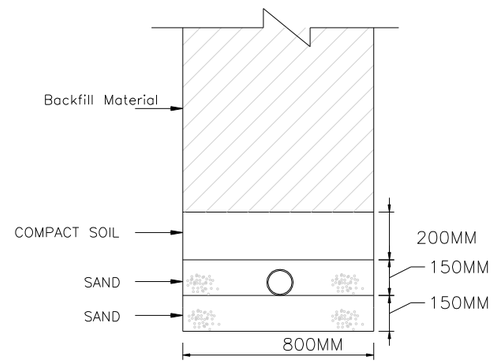

FOR SEWER PIPES

NOTE:WATER LINES LESS THAN 1250mm DEEP UNDER ROAD CROSSING SHALL HAVE A REINFORCED CONCRETE COVER OF AT LEAST 150mm THICKNESS AROUND THE PIPE

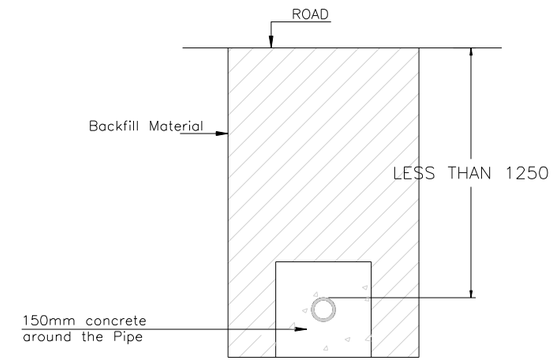

WATER OR SEWER PIPES UNDER THE ROAD

NOTE:

1. WHERE WATER LINES CROSS UNDER GRAVITY FLOW SEWER LINES, THE SEWER PIPE, FOR A DISTANCE OF AT LEAST 3000MM EACH SIDE OF THE CROSSING, SHALL BE FULLY ENCASED IN CONCRETE OR SHALL BE MADE OF PRESSURE PIPE WITH NO JOINT LOCATED WITHIN 900MM HORIZONTALLY OF THE CROSSING.

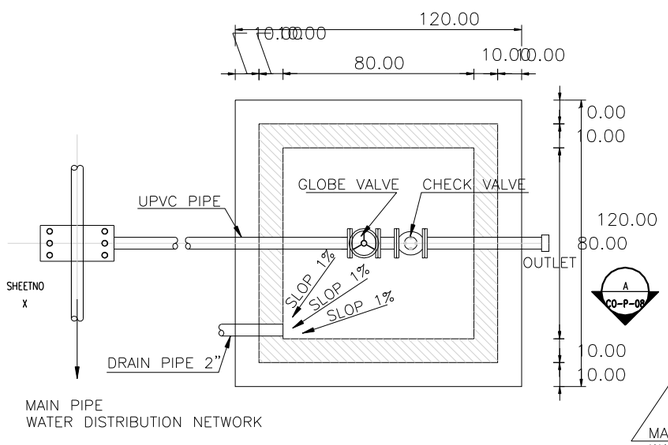

PIPE CONNECTION TO BUILDING PLAN

SCALE: 1:20

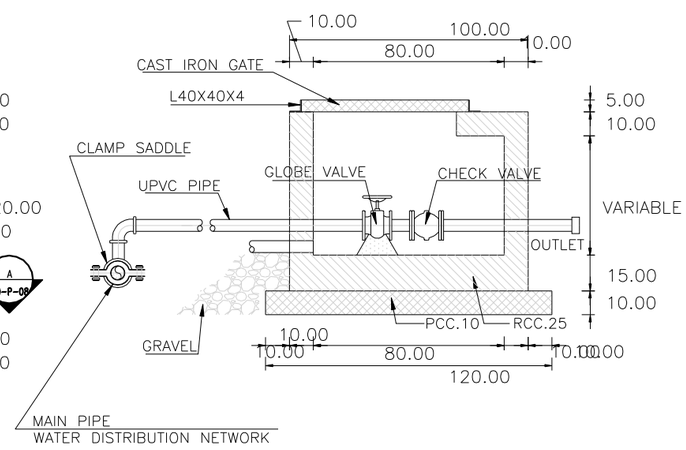

WATER DISTRIBUTION SECTION A–A

SCALE: 1:20

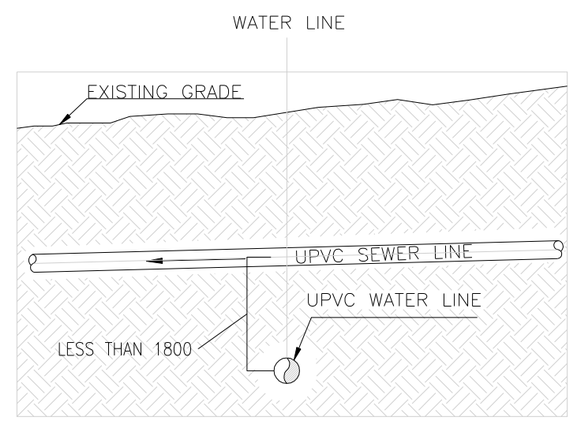

WATER AND SEWER PIPE VERTICAL CROSS SECTION

SCALE: NTS

UNLESS OTHERWISE NOTED, LINEAR DIMENSIONS SHOWN ARE IN MILLIMETERS.

SYMBOL	DESCRIPTION	DATE	APP

DESIGNED BY: MW
DATE: 02-05-07
DWN BY: TSR
SUBMITTED BY: R. KORTYOHANN CHIEF, PDT SITE DEV
CHK BY: REK
FILE NO.: AF0701 --CI08DT

US Army Corps of Engineers
Transatlantic Programs Center

AFGHAN NATIONAL POLICE HEADQUARTERS (2 STORY) COMPOUND
AFGHANISTAN
SITE DESIGN
STANDARD PLUMBING DETAILS

SHEET REFERENCE NUMBER:
C-8

3/9/2007
h:\projects\afghanistan\af0701\af0701\civ\af0701--ci08dt2.dwg

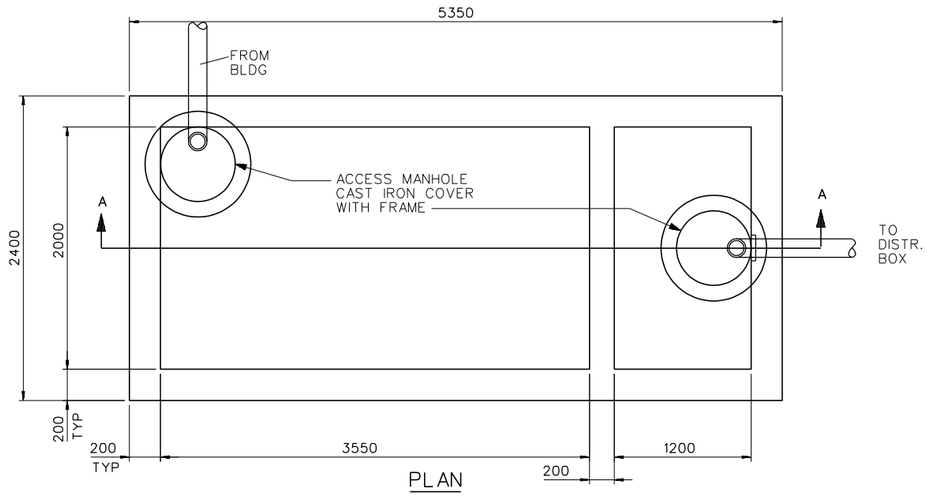

PLAN

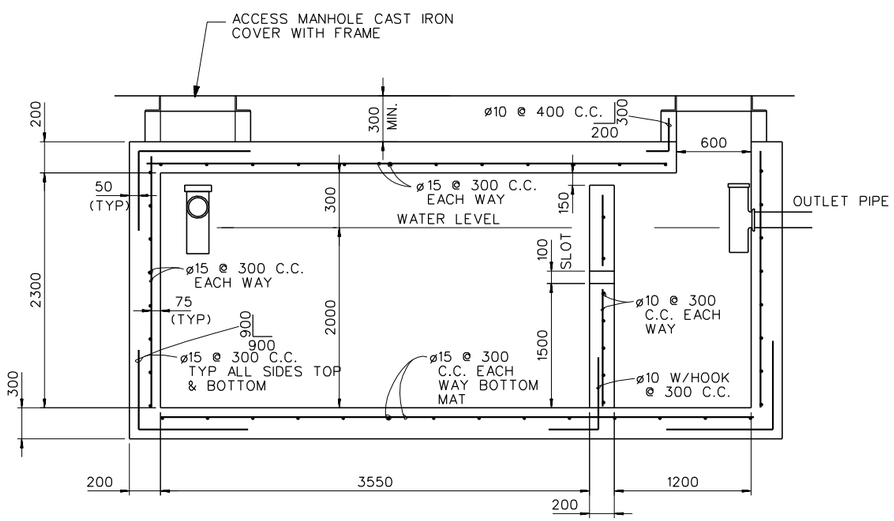

SECTION A-A

CONCRETE SEPTIC TANK DETAILS

NOT TO SCALE

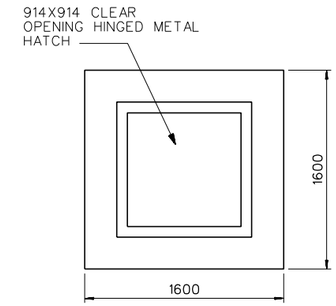

TOP SLAB PLAN

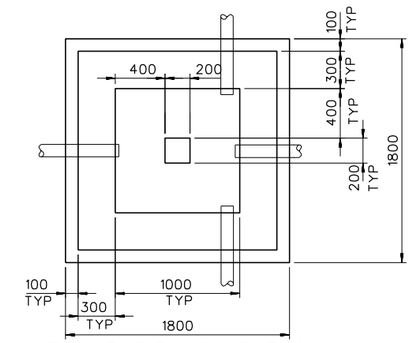

FOUNDATION SLAB PLAN

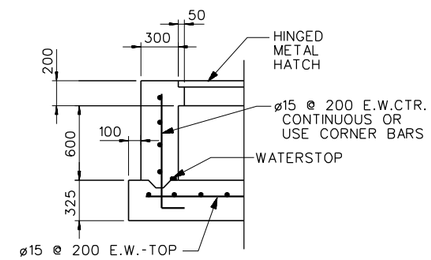

TYP WALL SECTION

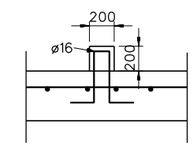

SECTION

DISTRIBUTION BOX

NOT TO SCALE

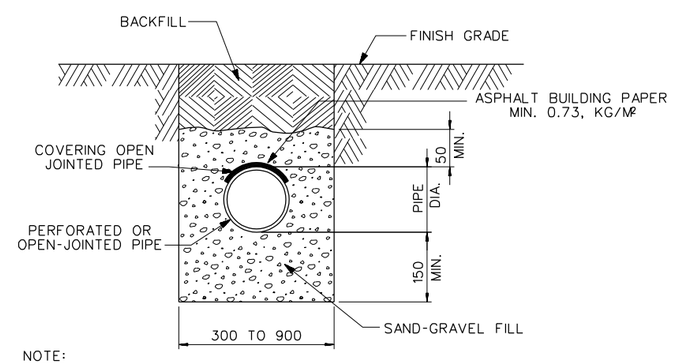

NOTE:
OPEN JOINTS SHALL BE 5 - 10mm WIDE.

TILE FIELD, TRENCH

NOT TO SCALE

UNLESS OTHERWISE NOTED, LINEAR DIMENSIONS SHOWN ARE IN MILLIMETERS.

SYMBOL	DESCRIPTION	DATE	APP

DESIGNED BY: MW	DATE: 02-05-07		
DWN BY: TSR	SUBMITTED BY: R. KORTYOHANN CHIEF, PDT SITE DEV.		
CHK BY: REK	FILE NO.: AF0701 --CI09DT		

US Army Corps of Engineers
Transatlantic Programs Center

AFGHAN NATIONAL POLICE HEADQUARTERS (2 STORY) COMPOUND
AFGHANISTAN
SITE DESIGN
SEPTIC TANK DETAILS

SHEET REFERENCE NUMBER:
C-9

3/9/2007
h:\projects\afghanistan\af0701\af0701\civ\af0701--ci09dt.dwg

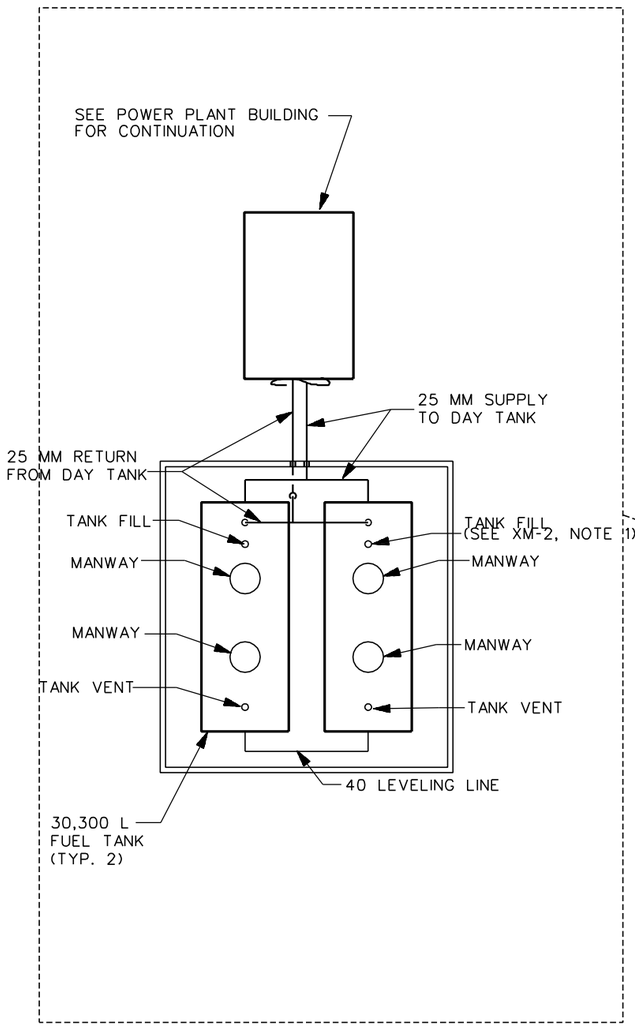

ENLARGED MECHANICAL SITE PLAN

SCALE 1: 100

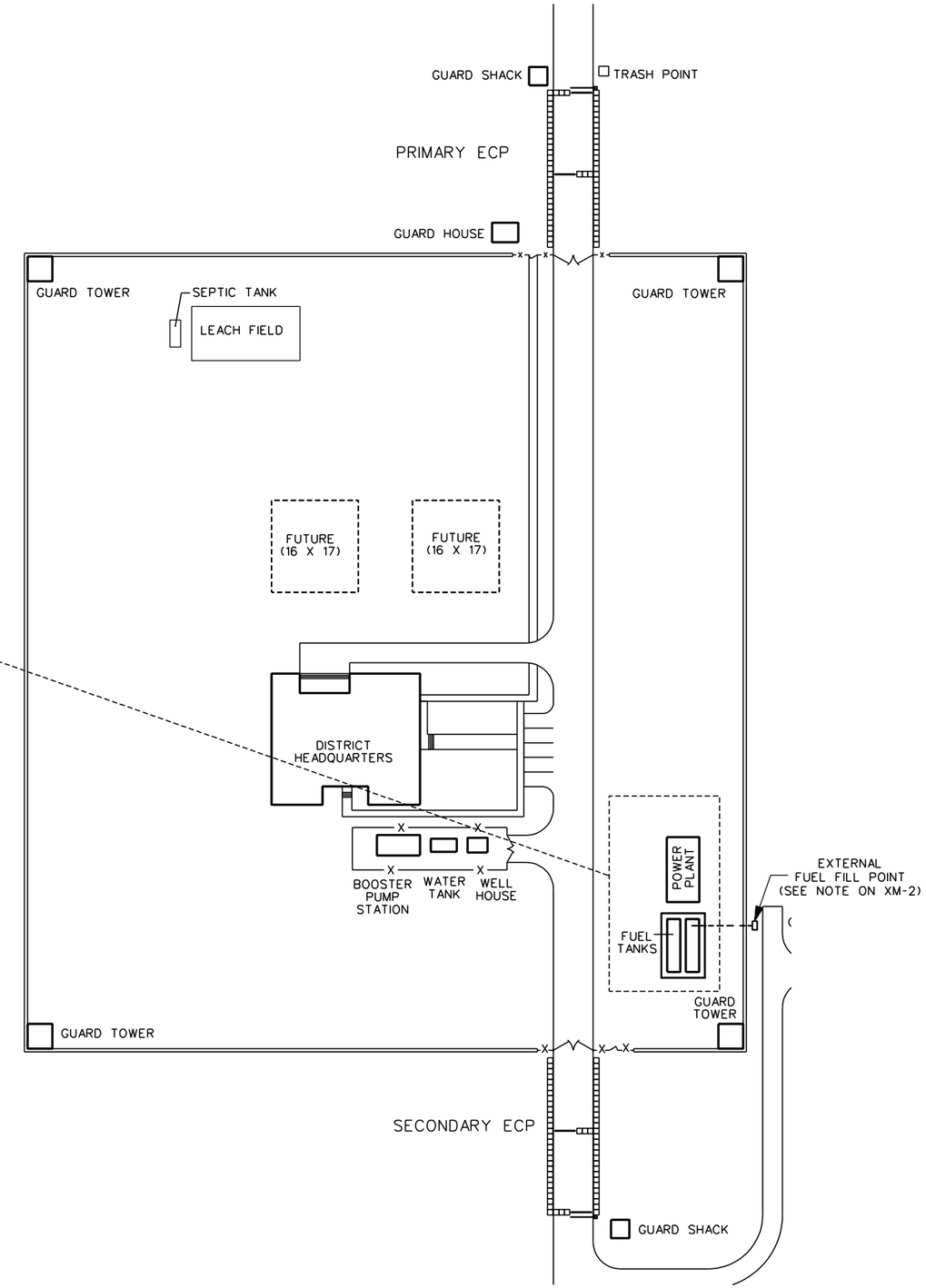

SYMBOL	DESCRIPTION	DATE	APP.

DESIGNED BY: RMS
DATE: 02-05-07
DWN BY: JMC
SUBMITTED BY: SYED ENAYATULLA, CHIEF, PDU BLDG SYSTEMS
CHK BY: SE
FILE NO.: AF0701 --MSOIPN

US Army Corps of Engineers
Transatlantic Programs Center

AFGHAN NATIONAL POLICE HEADQUARTERS (2 STORY) COMPOUND
AFGHANISTAN
SITE DESIGN
MECHANICAL SITE PLAN

SHEET REFERENCE NUMBER:
XM-1

3/9/2007
h:\projects\afghanistan\af0701\af0701\mec\AF0701--MSOIPN.DWG

NOTE:

1. SEE SPECIFICATION SECTION 01015 FOR PROVIDING REMOTE FUEL UNLOADING POINT OUTSIDE OF THE PERIMETER WALL TO FACILITATE TRANSFER OF FUEL FROM FUEL TANKER TO BULK STORAGE TANK.

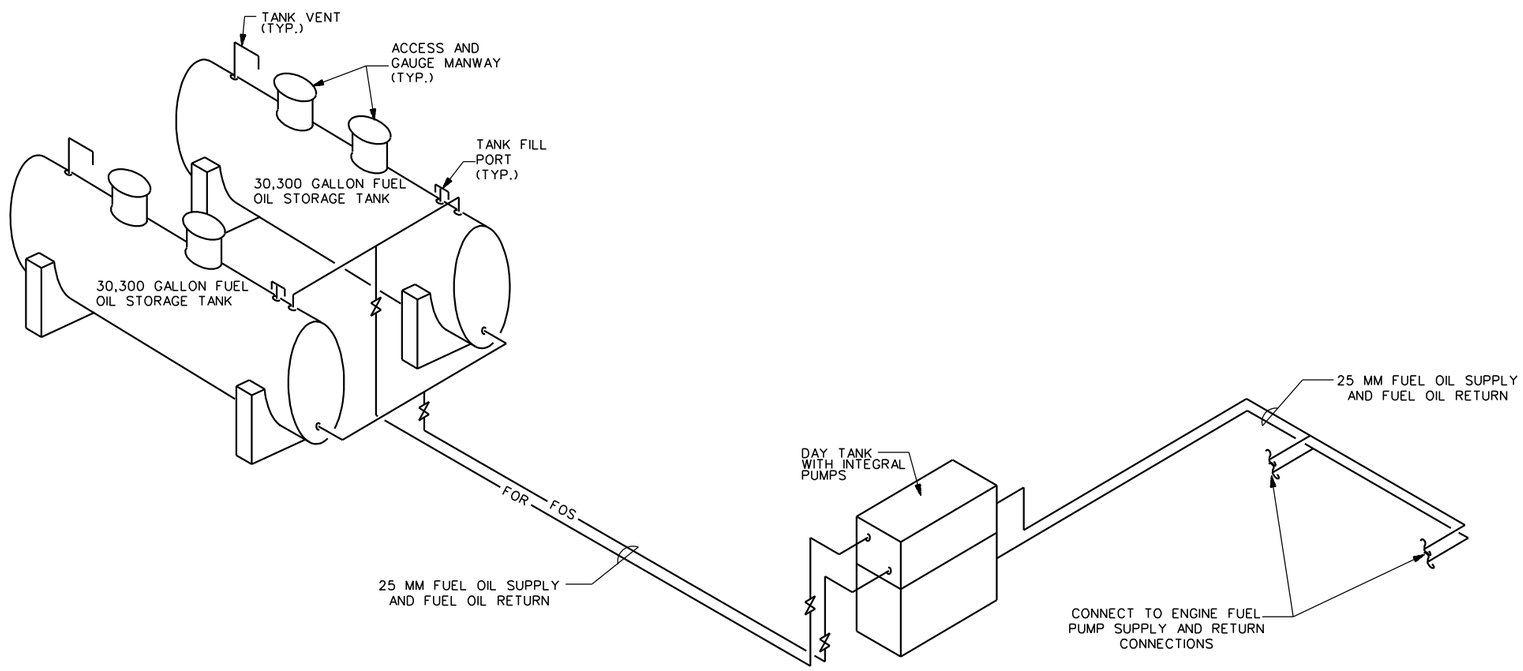

FUEL OIL SCHEMATIC
N.T.S.

UNLESS OTHERWISE NOTED, LINEAR DIMENSIONS SHOWN ARE IN MILLIMETERS.

SYMBOL	DESCRIPTION	DATE	APP

DESIGNED BY: RMS
DATE: 02-05-07
DWN BY: JMC
SUBMITTED BY: SYED ENAYATULLA CHIEF, PDT BLDG SYSTEMS
CHK BY: RMS
FILE NO.: AF0701 --MS02DI

US Army Corps of Engineers
Transatlantic Programs Center

AFGHAN NATIONAL POLICE HEADQUARTERS (2 STORY) COMPOUND
AFGHANISTAN
SITE DESIGN
FUEL OIL SCHEMATIC

SHEET REFERENCE NUMBER:
XM-2

3/9/2007
h:\projects\afghanistan\af0701\af0701mec\AF0701--MS02DI.DWG

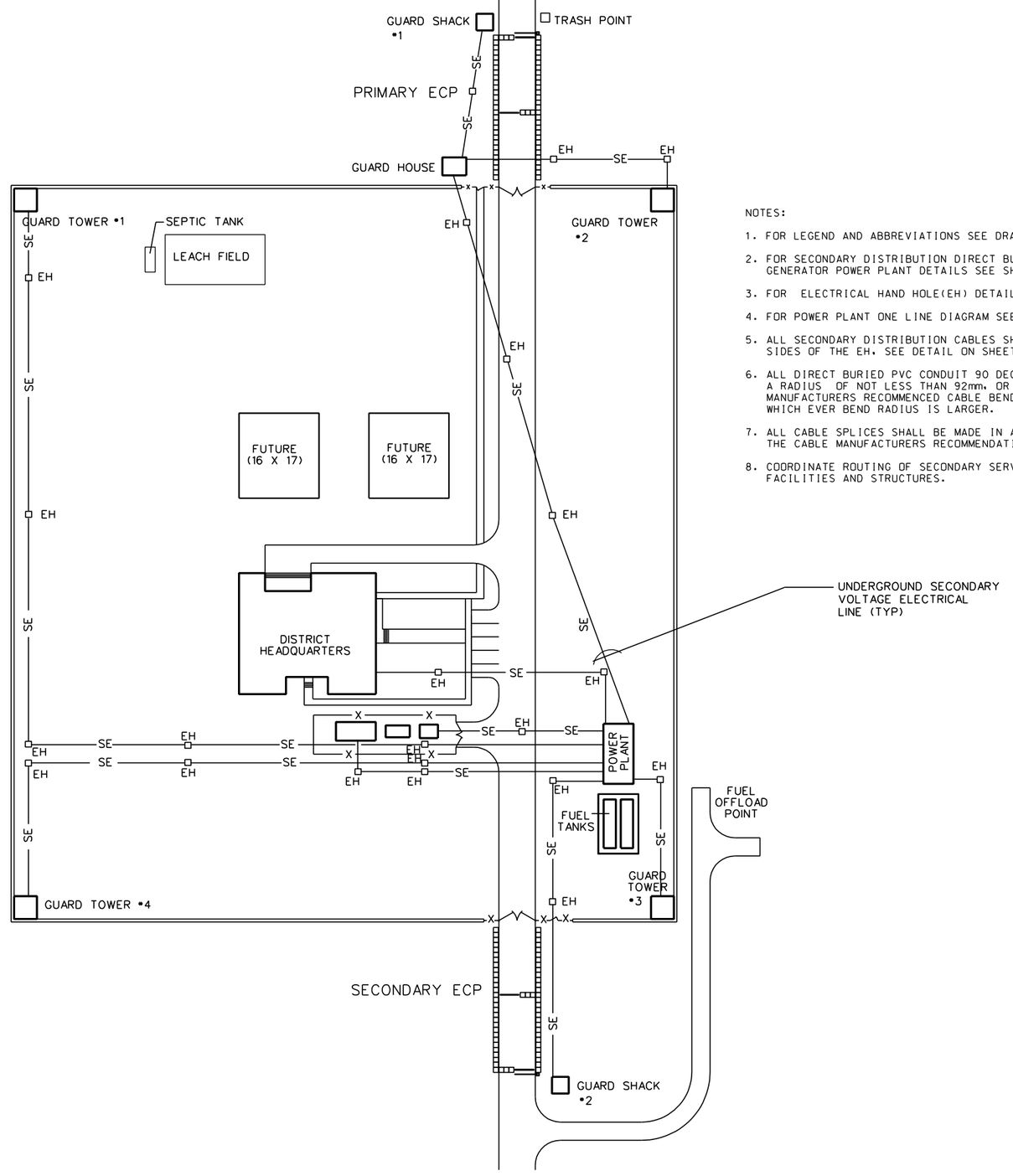

NOTES:

1. FOR LEGEND AND ABBREVIATIONS SEE DRAWING SE-1.
2. FOR SECONDARY DISTRIBUTION DIRECT BURIED (DB) DUCT DETAILS AND GENERATOR POWER PLANT DETAILS SEE SHEET SE-4 AND SE-6.
3. FOR ELECTRICAL HAND HOLE(EH) DETAILS SEE SHEET SE-8.
4. FOR POWER PLANT ONE LINE DIAGRAM SEE DRAWING XE-2.
5. ALL SECONDARY DISTRIBUTION CABLES SHALL BE RACKED ON THE SIDES OF THE EH. SEE DETAIL ON SHEET SE-4.
6. ALL DIRECT BURIED PVC CONDUIT 90 DEGREE BENDS SHALL HAVE A RADIUS OF NOT LESS THAN 92mm. OR NOT LESS THAN THE CABLE MANUFACTURERS RECOMMENCED CABLE BENDING RADIUS. WHICH EVER BEND RADIUS IS LARGER.
7. ALL CABLE SPLICES SHALL BE MADE IN AN EH AND IN ACCORDANCE WITH THE CABLE MANUFACTURERS RECOMMENDATIONS.
8. COORDINATE ROUTING OF SECONDARY SERVICES AS NECESSARY TO AVOID FACILITIES AND STRUCTURES.

10 0 10 20 30 40
1:500

SYMBOL	DESCRIPTION	DATE	APP

DESIGNED BY: MM | DATE: 02-05-07
DWN BY: MM | SUBMITTED BY: SYED EMAYATULLA, CHIEF, PDT BLDG SYSTEMS
CHK BY: SE | FILE NO.: AF0701 --ESOIPN

US Army Corps of Engineers
Transatlantic Programs Center

AFGHAN NATIONAL POLICE HEADQUARTERS (2 STORY) COMPOUND
AFGHANISTAN
SITE DESIGN
ELECTRICAL SITE PLAN

SHEET REFERENCE NUMBER:
XE-1

3/9/2007
h:\projects\afghanistan\af0701\af0701\ele\af0701--ESOIPN.DWG

GENERATORS OPERATING LOGIC:
1. ONE GENERATOR SHALL OPERATE AT ALL TIMES.
2. WHEN THE OPERATING GENERATOR REACHES 90% OF IT'S RATED CAPACITY (108KW), THE SECOND GENERATOR SHALL START, SYNCHRONIZE WITH THE OPERATING GENERATOR AND COME ON-LINE TO SHARE THE TOTAL DEMAND LOAD EQUALLY.
3. WHEN THE TOTAL DEMAND LOAD ON THE SWITCHBOARD REACHES 80% OF THE FIRST GENERATOR RATING (96KW), THE SECOND GENERATOR SHALL COME OFF-LINE, RUN THROUGH A COOL DOWN CYCLE AND GO INTO A STAND-BY MODE.
4. GENERATOR SYNCHRONIZING EQUIPMENT SHALL BE ADJUSTABLE BETWEEN 60% TO 95% OF THE GENERATOR RATING.

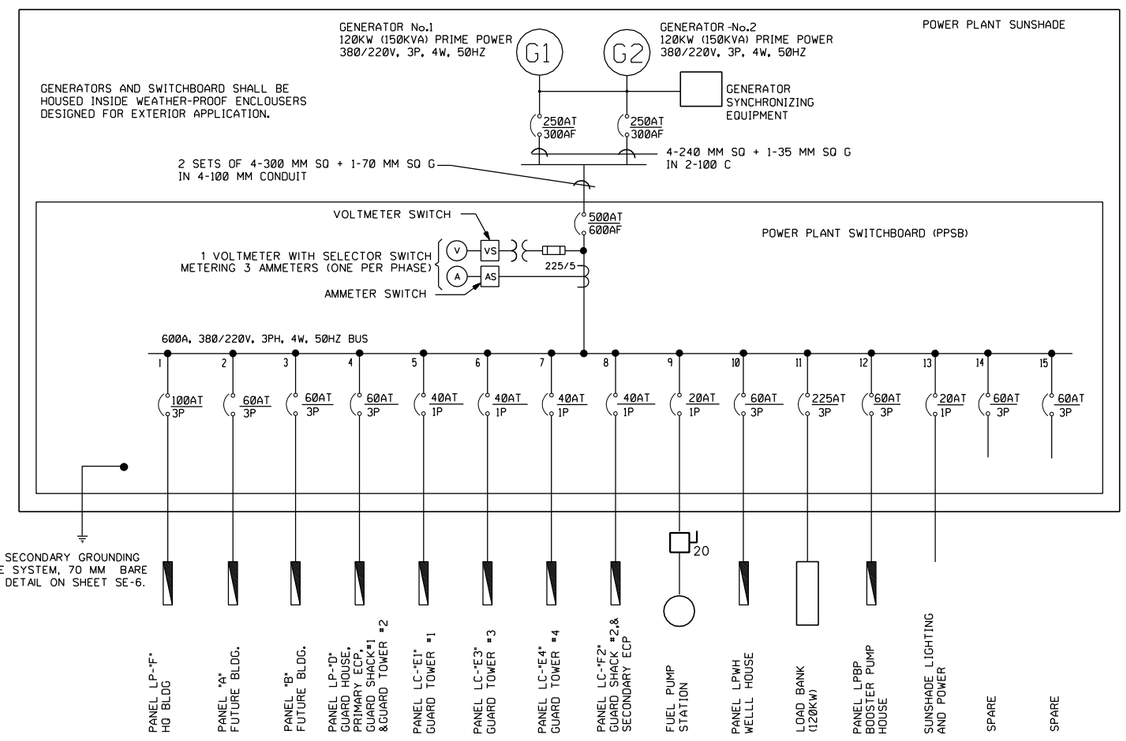

ONE LINE DIAGRAM
NOT TO SCALE

NOTES:

1. FOR LEGEND AND ABBREVIATIONS SEE DRAWING SE-1.
2. FOR POWER PLANT GROUNDING DETAILS SEE SHEET SE-6.
3. CONTRACTOR SHALL CONFIRM THAT ALL FINAL CIRCUIT RATINGS ARE BASED ON THE ACTUAL NAMEPLATE OF THE SUPPLIED EQUIPMENT.
4. ALL PPSB SECONDARY DISTRIBUTION CIRCUIT CONDUITS SHALL BE RAN FROM THE BOTTOM OF PPSB THROUGH GENERATOR CONCRETE SLAB TO ELECRIC HAND HOLES IN SCHEDULE 40 PVC CONDUIT.
5. ALL SECONDARY DISTRIBUTION CABLES SHALL BE 600V - FOUR CORE OR TWO CORE (AS INDICATED) COPPER CONDUCTOR PVC INSULATED PVC SHEATHED CABLES (CU/PVC/PVC).
6. THE POWER PLANT SWITCHBOARD SHALL BE A MANUFACTURERS STANDARD PRODUCT WITH MOLDED CASE CKT BREAKERS. DEAD FRONT CONSTRUCTION IN AN APPROVED IP54 ENCLOSURE.
7. FOR A TYPICAL POWER PLANT EQUIPMENT LAYOUT SEE THE GROUNDING PLAN ON SHEET SE-6.
8. CONTRACTOR SHALL DESIGN AND CONSTRUCT A COVERED SHELTER/SUNSHADE TO HOUSE THE GENERATORS AND ASSOCIATED SWITCHBOARD AND EQUIPMENT.

PANELBOARD: PPSB
MOUNTED: FLOOR
ASYM. A.I.C. MIN: MINIMUM 22,000
MAIN BREAKER (AT/AF): 400/500
VOLTAGE RATING: 380/220V, 3PH, 4W, 50HZ
BUS AMP. RATING: 600

CKT. NO.	TRIP AMPS	NO. POLES	WIRE MM2	GND MM2	CONDUIT MM	CONNECTED	REMARKS
1	225	3	150	50	100	125.94	PANEL LPF, HEADQUARTERS BUILDING
2	60	3				30.00	PANEL "A" FUTURE
3	60	3				30.00	PANEL "B", FUTURE
4	60	3	16	6	38	16.70	PANEL LP-"D": GUARD HOUSE, PRIMARY ECP, GUARD SHACK #1, GUARD TOWER #2
5	40	1	25	16	38	5.0	PANEL LC-"E1": GUARD TOWER #1
6	40	1	10	6	25	5.0	PANEL LC-"E3": GUARD TOWER #3
7	40	1	16	6	32	5.0	PANEL LC-"E4": GUARD TOWER #4
8	40	1	25	16	38	4.3	PANEL LC-"F2": GUARD SHACK #2 & SECONDARY ECP
9	20	1	16	6	32	3.5	FUEL PUMPS
10	60	3	16	6	38	9.94	WELL PUMP
11	225	3	70	70	50		LOAD BANK
12	60	3	16	6	38	12.87	PANEL LPBP, BOOSTER PUMP HOUSE
13	20	1	6	4	25	0.51	SUNSHADE LIGHTING AND POWER
14	60	3					SPARE
15	60	3					SPARE
TOTAL CONNECTED LOAD						248.76 KVA	

CONN. LOAD: 248.76 KVA 80 % DEMAND = EST DEM LOAD 199.00 KVA
SUPPLIED FROM: GENERATORS

UNLESS OTHERWISE NOTED, LINEAR DIMENSIONS SHOWN ARE IN MILLIMETERS.

SYMBOL	DESCRIPTION	DATE	APP

DESIGNED BY: MM | DATE: 02-05-07
DWN BY: MM | SUBMITTED BY: SYED ENAYATULLA, CHIEF, POLY BLDG SYSTEMS
CHK BY: SE | FILE NO.: AF0701 --ES02DI

US Army Corps of Engineers
Transatlantic Programs Center

AFGHAN NATIONAL POLICE HEADQUARTERS (2 STORY) COMPOUND
AFGHANISTAN
SITE DESIGN
ONE LINE DIAGRAM

SHEET REFERENCE NUMBER:
XE-2

3/9/2007
h:\projects\afghanistan\af0701\af0701\ele\AF0701--ES02DI.DWG

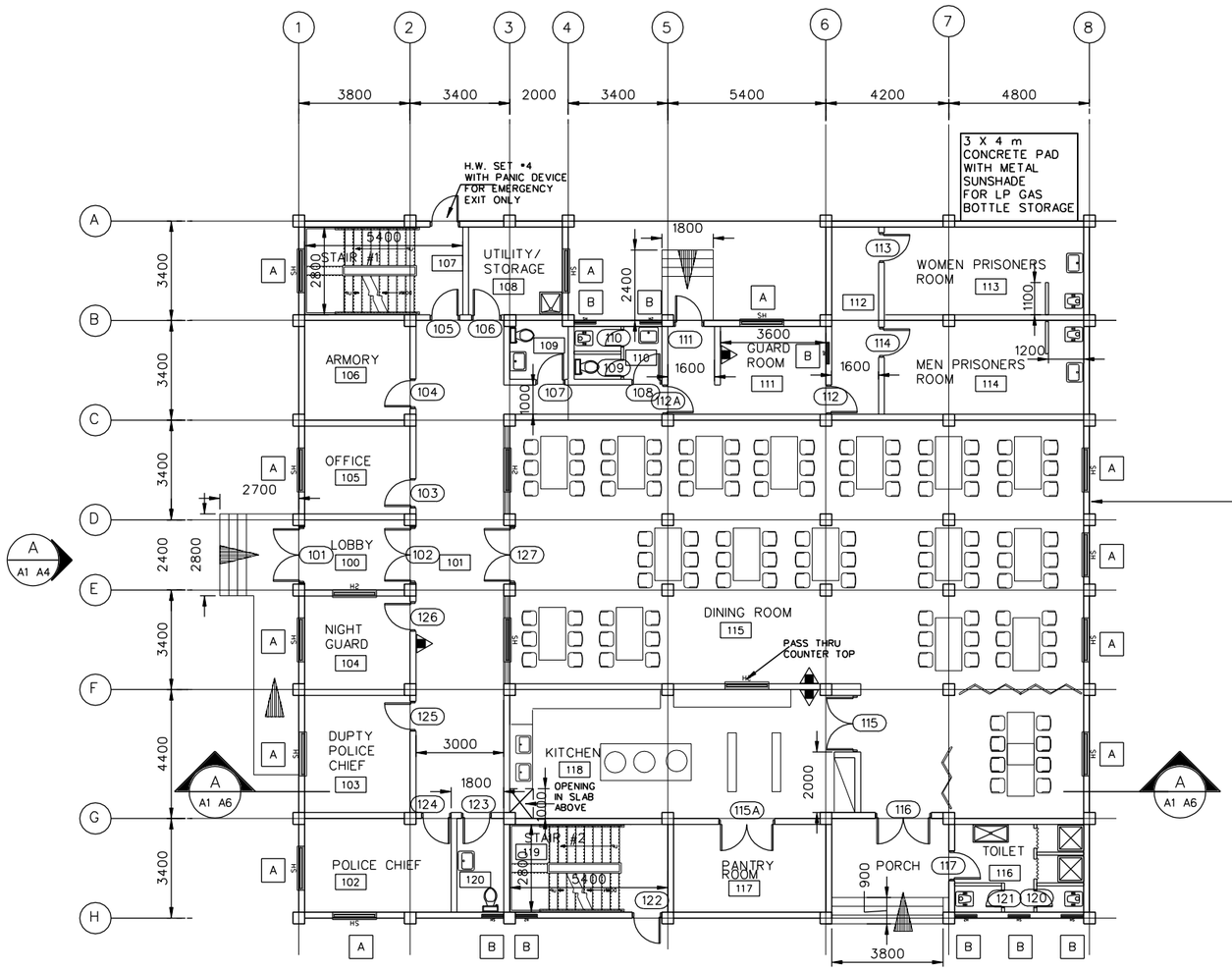

FLOOR PLAN
SCALE=1 :100

FLOOR PLAN NOTES:

1. ALL INTERIOR WALLS ARE 200 CMU EXTENDING TO THE ROOF SLAB UNLESS NOTED OTHERWISE.

PROVIDE PORTABLE FIRE EXTINGUISHERS, ABC DRY CHEMICAL 4A:60B:C

2. ALL SHOWER WILL BE PROVIDED WITH SHOWER CURTAIN SEE PARAGRAPH 4.11.3 OF SECTION 01015.

3. ALL EXTERIOR WALL SHALL BE CAVITY WALL, SEE SA-2 FOR WALL SECTION DETAIL.

4. SEE SA-4 FOR WINDOW DETAILS

1 0 1 2 3 4 5 6 7 8 9
1:100

SYMBOL	DESCRIPTION	DATE	APP

DESIGNED BY: S. Hanna
DATE: 02-05-07
DWN BY: S. Hanna
SUBMITTED BY: PHILIP L. DINELLO CHIEF, POST FACILITIES DEV.
CHK BY:
FILE NO.: AF0701 A-ARO1PN

US Army Corps of Engineers
Transatlantic Programs Center

AFGHAN NATIONAL POLICE HEADQUARTERS (2 STORY) COMPOUND
AFGHANISTAN
POLICE HEADQUARTERS
FIRST FLOOR PLAN

SHEET REFERENCE NUMBER:
A
A-1

3/9/2007
h:\projects\afghanistan\af0701\af0701\arc\af0701A-aro01pn.dwg

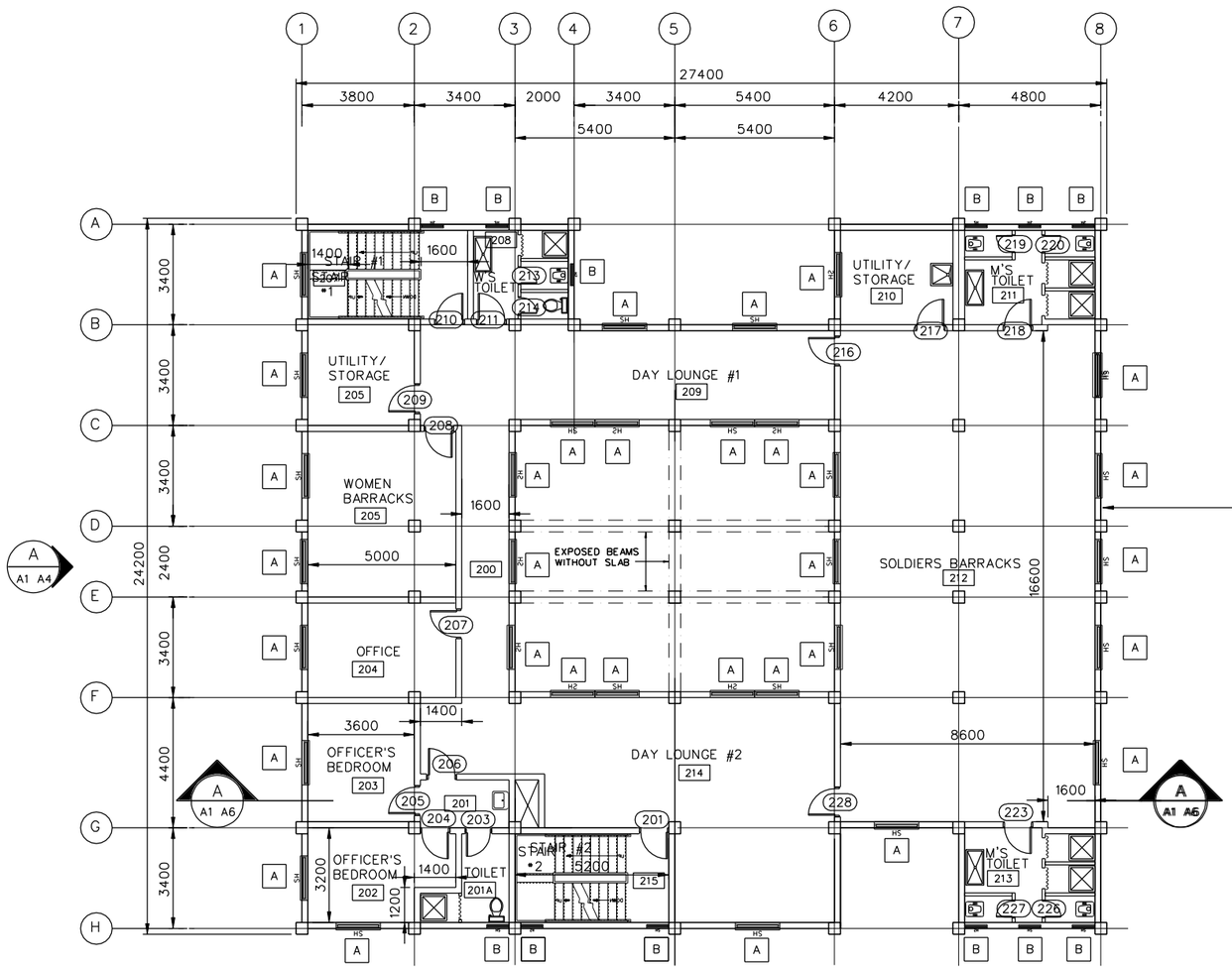

FLOOR PLAN
SCALE• 1 : 100

FLOOR PLAN NOTES:

1. ALL INTERIOR WALLS ARE 200 CMU EXTENDING TO THE ROOF SLAB UNLESS NOTED OTHERWISE.

PROVIDE PORTABLE FIRE EXTINGUISHERS, ABC DRY CHEMICAL 4A:60B:C

2. ALL SHOWER WILL BE PROVIDED WITH SHOWER CURTAIN SEE PARAGRAPH 4.11.3 OF SECTION 01015.

3. ALL EXTERIOR WALL SHALL BE CAVITY WALL, SEE SA-2 FOR WALL SECTION DETAIL.

4. SEE SA-4 FOR WINDOW DETAILS

1 0 1 2 3 4 5 6 7 8 9
1:100

UNLESS OTHERWISE NOTED, LINEAR DIMENSIONS SHOWN ARE IN MILLIMETERS.

SYMBOL	DESCRIPTION	DATE	APP

DESIGNED BY: S.Hanna
DATE: 02-05-07
DWN BY: S. Hanna
SUBMITTED BY: PHILIP L. DINELLO CHIEF, POST FACILITIES DEV.
CHK BY: CHECK_BY
FILE NO.: AF0701 A-AR02PN

US Army Corps of Engineers
Transatlantic Programs Center

AFGHAN NATIONAL POLICE HEADQUARTERS (2 STORY) COMPOUND
AFGHANISTAN
POLICE HEADQUARTERS
SECOND FLOOR PLAN

SHEET REFERENCE NUMBER:
A
A-2

3/9/2007
h:\projects\afghanistan\af0701\af0701b\arc\af0701a-ar02pn.dwg

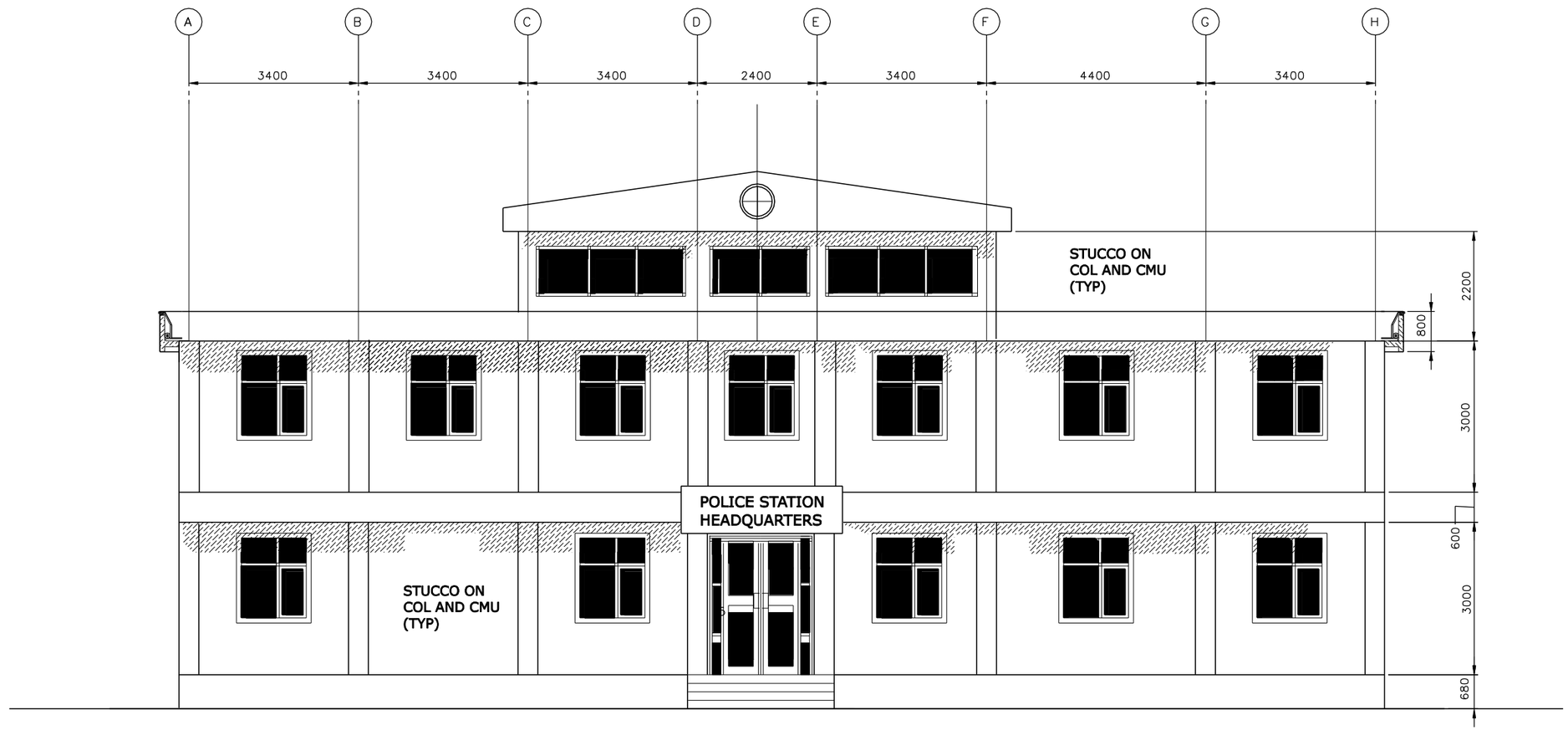

ELEVATION
SCALE = 1 : 50

A
A1 | A3

1 0 1 2 3 4
1:50

UNLESS OTHERWISE NOTED, LINEAR DIMENSIONS SHOWN ARE IN MILLIMETERS.

SYMBOL	DESCRIPTION	DATE	APP

DESIGNED BY: S. Hanna
DATE: 02-05-07
DWN BY: S. Hanna
SUBMITTED BY: PHILIP L. DINELLO, CHIEF, PDT FACILITIES DEV
CHK BY: CHECK_BY
FILE NO.: AF0701 A-ARO3EL

US Army Corps of Engineers
Transatlantic Programs Center

AFGHAN NATIONAL POLICE HEADQUARTERS (2 STORY) COMPOUND
AFGHANISTAN
POLICE HEADQUARTERS
BUILDING ELEVATION

SHEET REFERENCE NUMBER:
A
A-3

3/9/2007
h:\projects\afghanistan\af0701\af0701a\arc\af0701A-arO3el.dwg

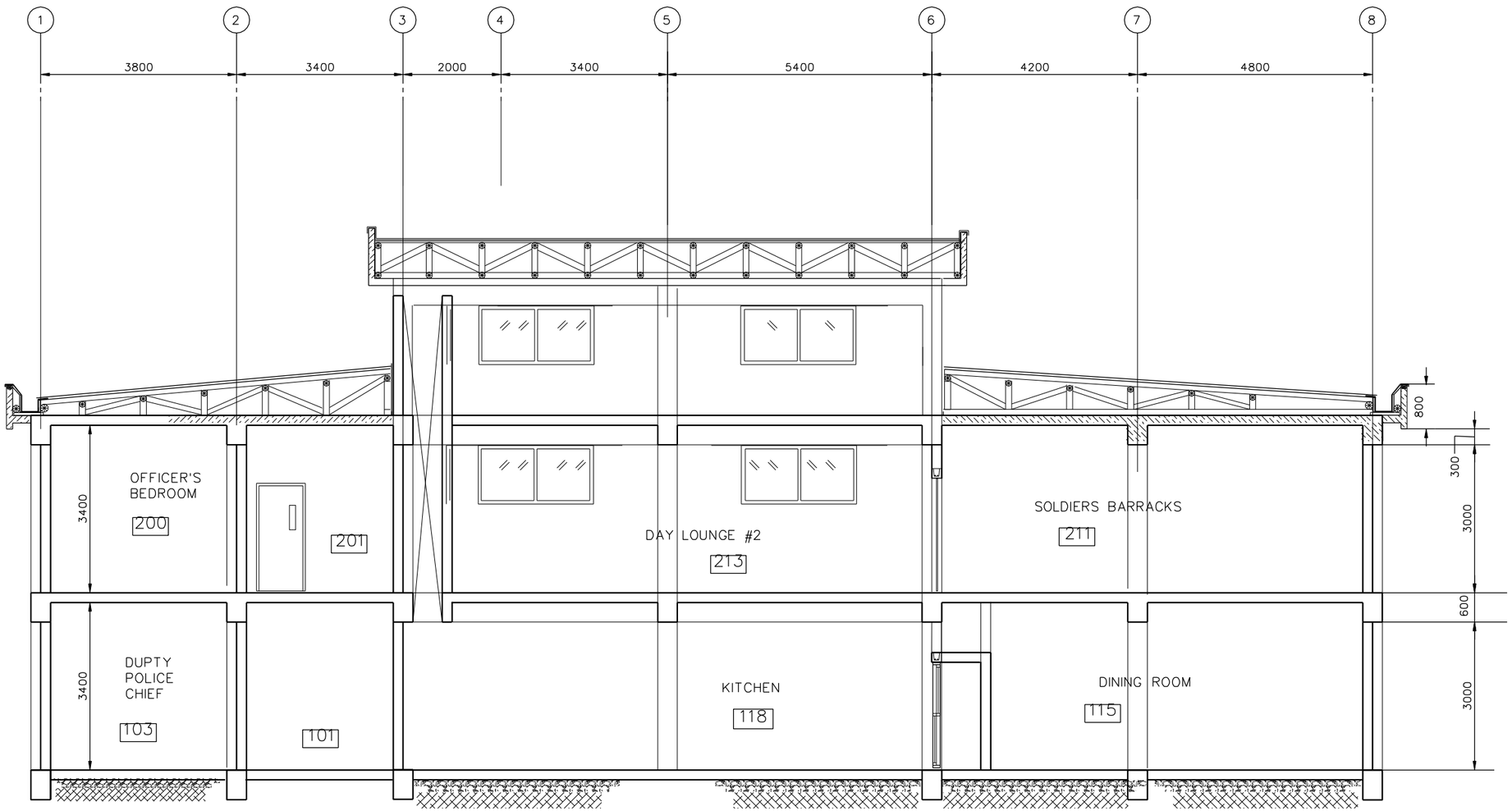

BUILDING SECTION (A / A1 A6)
SCALE: 1 = 100

1 0 1 2 3 4
1:50

UNLESS OTHERWISE NOTED, LINEAR DIMENSIONS SHOWN ARE IN MILLIMETERS.

SYMBOL	DESCRIPTION	DATE	APP

DESIGNED BY: S. Hanna
DATE: 02-05-07
DWN BY: S. Hanna
SUBMITTED BY: PHILIP L. DINELLO, CHIEF, POST FACILITIES DEV.
CHK BY: CHECK_BY
FILE NO.: AF0701 A-AR04SE

US Army Corps of Engineers
Transatlantic Programs Center

AFGHAN NATIONAL POLICE HEADQUARTERS (2 STORY) COMPOUND
AFGHANISTAN
POLICE HEADQUARTERS
BUILDING SECTION

SHEET REFERENCE NUMBER:
A
A-4

3/9/2007
h:\projects\afghanistan\af0701\af0701b\arc\af0701A-ar04se.dwg

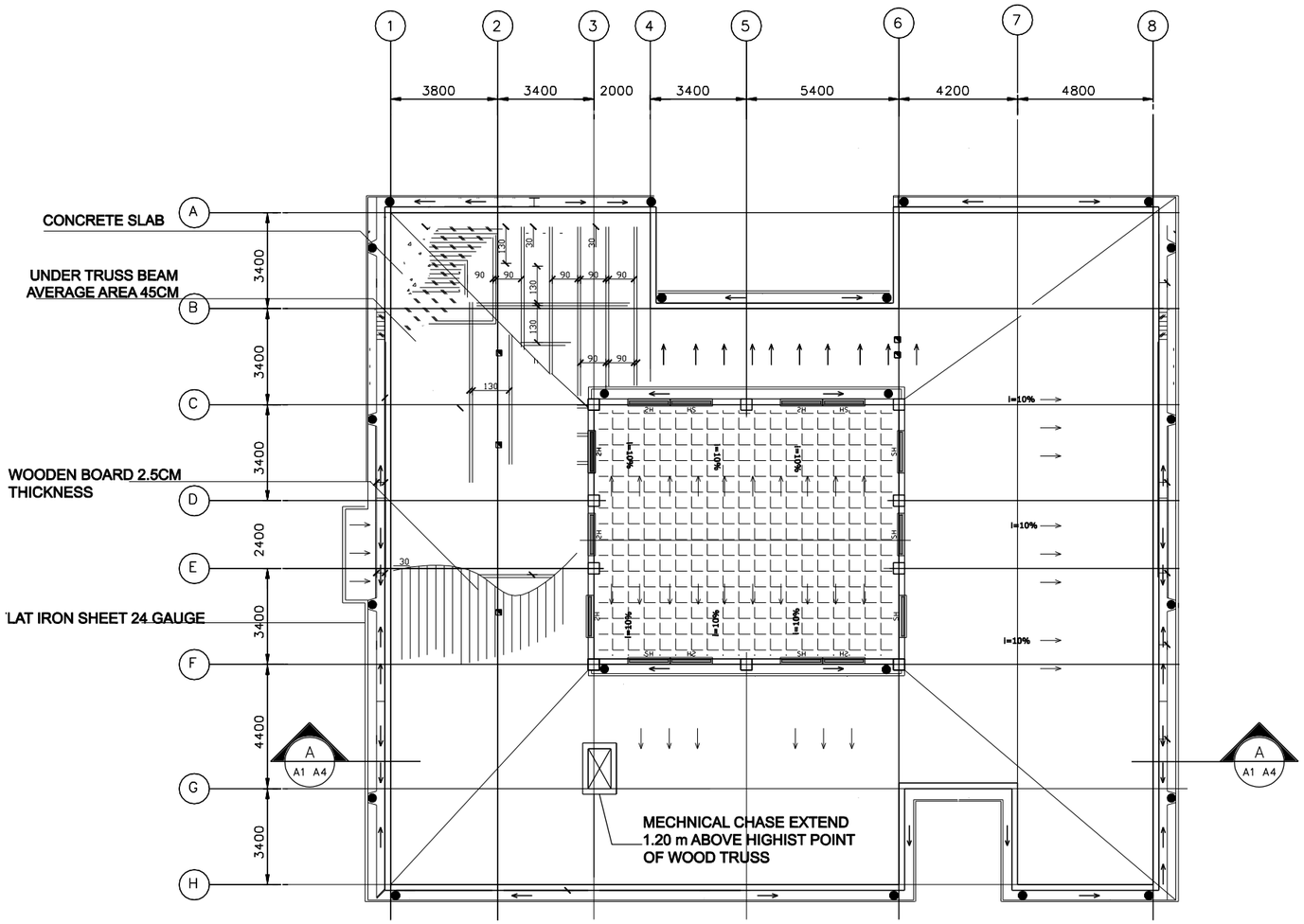

ROOF PLAN
SCALE = 1 : 100

UNLESS OTHERWISE NOTED, LINEAR DIMENSIONS SHOWN ARE IN MILLIMETERS.

SYMBOL	DESCRIPTION	DATE	APP

DESIGNED BY: S. Hanna
DATE: 02-05-07
DWN BY: S. Hanna
SUBMITTED BY: PHILIP L. DINELLO, CHIEF, POST FACILITIES DEV.
CHK BY: CHECK_BY
FILE NO.: AF0701 A-ARO5PN

US Army Corps of Engineers
Transatlantic Programs Center

AFGHAN NATIONAL POLICE HEADQUARTERS (2 STORY) COMPOUND
AFGHANISTAN
POLICE HEADQUARTERS
ROOF PLAN

SHEET REFERENCE NUMBER:
A
A-5

3/9/2007
h:\projects\afghanistan\af0701\af0701\arc\af0701A-ar05pn.dwg

DOOR SCHEDULE

NO.	LOCATION	DOOR TYPE	DOOR MAT'L	WIDTH	HEIGHT	THICK	FRAME HEAD	FRAME JAMB	FRAME SILL	FRAME MAT''L	FIRE LABEL	HDW SET	REMARKS
FIRST FLOOR													XXXXXXXXXXX
101	LOBBY	G (PR)	H.M.	1800	2150	45	H-1/SA-2	J-1/SA-2	S-1/SA-2	H.M.		2	
102	COORIDOR	G (PR)		1800								2	
103	OFFICE	N		900								4	
104	ARMORY	V		900								8	
105	STAIR #1	F		900								4	
106	UTILITY/STORAGE	F		900								6	
107	WOMEN'S TOILET	L		900								5	
108	MEN'S TOILET	L		900								5	
109	TOILET	L		600								7	
110	TOILET	L		600								7	
111	ENTRANCE	G		900								1	
112	TO PRISONERS CELL	N		900								4	
112A	CORRIDOR	N		900								4	
113	W'S PRISONERS CELL	F (C)		900								11	
114	M'S PRISONER CELL	F (C)		900								11	
115	KITCHEN	N (PR)		1800								2	
115A	PANTRY ROOM	N (PR)		1800								2	
116	ENTRANCE	G (PR)		1800								2	
117	MEN'S TOILET	L		900								5	
NOT USED	SHOWER	OPENING		700								---	
NOT USED	SHOWER	OPENING		700								---	
120	TOILET	L		600								7	
121	TOILET	L		600								7	
122	STAIR #2	F		900								4	
123	OFFICER'S TOILET	L		900								4	
124	POLICE CHIEF OFF	N		900								3	
125	DUPTY CHIEF OFF	N		900								3	
126	NIGHT GUARD OFF	N		900								3	
127	DINING ROOM	G (PR)		1800								2	
SECOND FLOOR													
201	STAIR #2	F		900								4	
NOT USED	NOT USED	NOT USED		NOT USED								---	
203	OFFICER'S TOILET	L		900								4	
204	OFFICER'S BD. RM	F		900								7	
205	OFFICER'S BD. RM	F		900								7	
206	OFFICER'S SUITE	N		900								4	
207	OFFICE	N		900								4	
208	WOMEN'S BARRECKS	F		900								7	
209	UTILITY/STORAGE	N		900								6	
210	STAIR #1	F		900								4	
211	WOMEN'S TOILET	L		900								5	
NOT USED	SHOWER	OPENING		700								---	
213	TOILET	L		600								7	
214	TOILET	L		600								7	
NOT USED	NOT USED	NOT USED										---	
216	DAY LOUNGE #1	N		900								4	
217	UTILITY/STORAGE	N		900								6	
218	MEN'S TOILET	L		900								5	
219	TOILET	L		600								7	
220	TOILET	L		600								7	
NOT USED	SHOWER	OPENING		700								---	
NOT USED	SHOWER	OPENING		700								---	
223	MEN'S TOILET	L		900								5	
NOT USED	SHOWER	OPENING		700								---	
NOT USED	SHOWER	OPENING		700								---	
226	TOILET	L		600								7	
227	TOILET	L		600								7	
228	DAY LOUNGE #2	N		900								4	

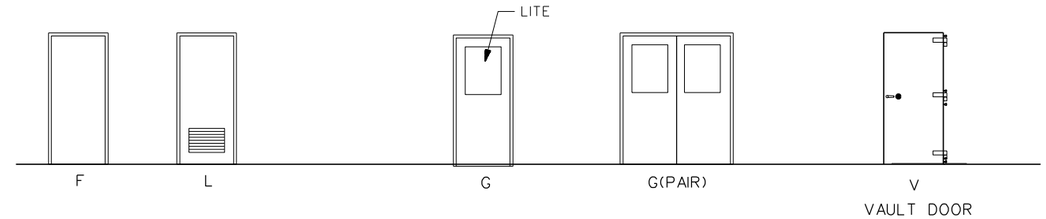

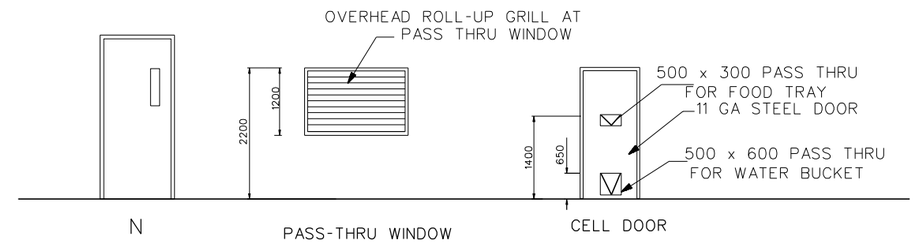

DOOR NOTES:

1. FOR HEAD, JAMB AND SILL DETAILS, SEE SHEET SA-2.
2. SEE DOOR SCHEDULE FOR DOOR AND FRAME SIZES.

TYPICAL DOOR TYPES
(NOT TO SCALE)

DOOR SCHEDULE NOTES:

1. CELL DOOR SHALL BE 11 GA STEEL DOOR WITH PASS-THRU WINDOWS AS SHOWN ON SA-2. PROVIDE HINGED DOORS TO
2. PROVIDE 600 X 400 LOUVERS IN DOOR TYPE (L)
3. UNDERCUT ALL DOORS BY 12 mm.

   THESE PASS-THRU WINDOWS WITH PADLOCKS TO THE OUTSIDE.
4. DOOR TO BE CERTIFIED CLASS V VAULT DOOR. SEE SPECIFICATIONS.

UNLESS OTHERWISE NOTED, LINEAR DIMENSIONS SHOWN ARE IN MILLIMETERS.

SYMBOL	DESCRIPTION	DATE	APP.

DESIGNED BY: S. Hanna
DATE: 02-05-07
DWN BY: S. Hanna
SUBMITTED BY: PHILIP L. DINELLO, CHIEF, POST FACILITIES DEV.
CHK BY: CHECK_BY
FILE NO.: AF0701 A-AR06SC

US Army Corps of Engineers
Transatlantic Programs Center

AFGHAN NATIONAL POLICE HEADQUARTERS (2 STORY)
COMPOUND
AFGHANISTAN
POLICE HEADQUARTERS
DOOR SCHEDULE

SHEET REFERENCE NUMBER:
A
A-6

3/9/2007
h:\projects\afghanistan\af0701\af0701\arc\af0701A-ar06sc.dwg

ROOM FINISH SCHEDULE

ROOM NO.	ROOM NAME	FLOOR MAT'L.	FLOOR COLOR	BASE MAT'L.	BASE COLOR	WALLS MAT'L.	WALLS COLOR	CEILING MAT'L.	CEILING COLOR	HEIGHT	REMARKS
	FIRST FLOOR										XXXXXXXXXX
100	LOBBY	F2	2	B2	11	W2	21	C2	31	3.4 m	
101	COORIDOR	F2	2	B2	11	W2	21	C2			
102	POLICE CHIEF OFF	F2	2	B2	11	W2	21	C2			
103	DUPTY CHIEF OFF	F2	2	B2	11	W2	21	C2			
104	NIGHT GUARD OFF	F2	2	B2	11	W2	21	C2			
105	OFFICE	F2	2	B2	11	W2	21	C2			
106	ARMORY	F2	2	B2	11	W2	21	C2			
107	STAIR #1	F4	4	B4	13	W1	20	C2			
108	UTILITY/STORAGE	F2	2	B2	11	W2	21	C2			
109	WOMEN'S TOILET	F3	3	B3	12	W3	23	C2			
110	MEN'S TOILET	F3	3	B3	12	W3	23	C2			
111	PRISONERS GUARD ROOM	F2	2	B2	11	W2	21	C2			
112	PRISONERS GUARD ROOM	F2	2	B2	11	W2	21	C2			
113	W'S PRISONERS CELL	F2	2	B2	11	W2	21	C2			
114	M'S PRISONER CELL	F2	2	B2	11	W2	21	C2			
115	DINING ROOM	F2	2	B2	11	W2	21	C2			
116	MEN'S TOILET	F3	3	B3	12	W3	23	C2			
117	PANTRY	F2	2	B2	11	W2	21	C2			
118	KITCHEN	F2	2	B2	11	W2	21	C2			
119	STAIR #2	F4	4	B4	13	W1	20	C2			
120	OFFICER'S TOILET	F3	3	B3	12	W3	23	C2			
	SECOND FLOOR										
200	COORIDOR	F2	2	B2	11	W2	21	C2			
201	OFFICER'S LOBBY	F2	2	B2	11	W2	21	C2			
201A	OFFICER'S TOILET	F3	3	B3	12	W3	23	C2			
202	OFFICER'S BEDROOM	F2	2	B2	11	W2	21	C2			
203	OFFICER'S BEDROOM	F2	2	B2	11	W2	21	C2			
204	OFFICE	F2	2	B2	11	W2	21	C2			
205	WOMEN'S BARRECKS	F2	2	B2	11	W2	21	C2			
206	UTILITY/STORAGE	F2	2	B2	11	W2	21	C2			
207	STAIR #1	F4	4	B4	13	W1	20	C2			
208	WOMEN'S TOILET	F3	3	B3	12	W3	23	C2			
209	DAY LOUNGE #1	F2	2	B2	11	W2	21	C2			
210	UTILITY/STORAGE	F2	2	B2	11	W2	21	C2			
211	MEN'S TOILET	F3	3	B3	12	W3	23	C2			
212	SOLDER,S BARRECKS	F2	2	B2	11	W2	21	C2			
213	MEN'S TOILET	F3	3	B3	12	W3	23	C2			
214	DAY LOUNGE #2	F2	2	B2	11	W2	21	C2			
215	STAIR #2	F4	4	B4	13	W1	20	C2			

ROOM FINISH SCHEDULE NOTES:

1. ALL NEW INTERIOR AND EXTERIOR SURFACES NOT PROVIDED WITH A COLOR FACTORY FINISH SHALL RECEIVE PAINT IN ACCORDANCE AS DIRECTED BY THE CONTRACTING OFFICER.
2. WHERE SCHEDULED, PLASTER OR TILE WALL FINISH SHALL EXTEND 100 MM ABOVE THE SUSPENDED CEILING.
3. ALL WALL PENETRATIONS SHALL BE SEALED TO PROVIDE A NEAT APPEARANCE. PENETRATIONS OF EXTERIOR WALLS SHALL BE SEALED TO BE WATER-TIGHT. SEALANT SHALL BE APPLIED IN ACCORDANCE WITH SPECIFICATION SECTION 07920.
4. SEALANTS SHALL MATCH THE COLOR OF ADJACENT SURFACES

ROOM FINISH SCHEDULE LEGEND

FLOOR TYPE

F1 SEALED CONCRETE
F2 TERRAZZO TILE
F3 CERAMIC TILE
F4 RUBBER

FLOOR COLOR

1 SEALED CONCRETE - NATURAL FINISH
2 TERRAZZO TILE - NAT'L TERRAZZO & MOSAIC ASSN, INC, NO. S-330
3 CERAMIC TILE - AMERICAN OLEAN, C-11, ALABASTER
4 DARK GRAY

BASE TYPE

B2 TERRAZZO
B3 CERAMIC
B4 100 m RUBBER
B5 NO BASE

BASE COLOR

11 TERRAZZO TILE - NAT'L TERRAZZO & MOSAIC ASSN, INC, NO. S-330
12 CERAMIC TILE - AMERICAN OLEAN, D-12, ALMOND
13 DARK GRAY

WALL TYPE

W1 PAINTED CMU
W2 PAINTED PLASTER
W3 CERAMIC TILE

WALL COLOR

20 PAINTED CMU -HEMPEL, 1005-Y50R-25400, LIGHT BEIGE
21 PAINTED PLASTER-HEMPEL, 0502-Y-15420, OFF WHITE
22 METAL PANEL - HEMPEL, 0502-Y-15420, OFF WHITE
23 CERAMIC TILE -AMERICAN OLEAN, D-12, ALMOND

CEILING TYPE

C1 PAINTED EXPOSED STRUCTURE
C2 PAINTED PLASTER

CEILING COLOR

30 PAINTED EXPOSED STRUCTURE - HEMPEL, 0502-Y-15420, OFF WHITE
31 PAINTED PLASTER HEMPEL, 0502-Y-15420, OFF WHITE

NOTE: PATTERN AND COLOR ARE SHOWN FOR REFERENCE ONLY, OTHER MANUFACTURER'S SIMILAR PATTERN AND COLOR MAY BE USED AS APPROVED BY THE CONTRACTING OFFICER.

EXTERIOR FINISH SCHEDULE

ROOF

METAL ROOF:
SHERWIN WILLIAMS #SW2445, CREAMY WHITE

WALL

INTEGRALLY COLORED SPLIT-FACED CMU
SHERWIN WILLIAMS #SW2036, PELICAN TAN

EXTERNAL INSULATION FINISH SYSTEM (EIFS):
SHERWIN WILLIAMS #SW2036, PELICAN TAN

WINDOW AND DOOR FRAMES

ALUMINUM FRAMES:
SHERWIN WILLIAMS #SW2042, TERRACE BROWN

HOLLOW METAL FRAMES:
SHERWIN WILLIAMS #SW2294, CARRIAGE DOOR

DOORS:

SHERWIN WILLIAMS #SW2036, PELICAN TAN

HANDRAILS & GUARD RAILS: SHERWIN WILLIAMS #SW2042, TERRACE BROWN

CONCRETE FRAMES, BEAMS, FRAMES ETC

SHERWIN WILLIAMS #SW2036, PELICAN TAN

DOWNSPOUTS, GUTTERS, LOUVERS, FLASHING AND SEALANTS SHALL MATCH ADJACENT WALL COLOR.

SOFFITS:

METAL SOFFIT PANELS: SHERWIN WILLIAMS, #SW2205, TOWNHALL TAN

NOTES:

1. PATTERN, COLOR AND TEXTURE ARE SHOWN FOR REFERENCE ONLY. OTHER MANUFACTURER'S SIMILAR PATTERN, COLOR AND TEXTURE MAY BE USED AS APPROVED BY THE CONTRACTING OFFICER.
2. ALL INTERIOR AND EXTERIOR DOORS, WINDOWS AND FRAMES SHALL HAVE A SEMI-GLOSS FINISH.
3. TOILETS AND JANITOR CLOSET WALLS AND PLASTER CEILINGS, WHERE THEY OCCUR SHALL HAVE A SEMI-GLOSS FINISH.

SYMBOL	DESCRIPTION	DATE	APP

DESIGNED BY: S. Hanna
DWN BY: S. Hanna
CHK BY: CHECK_BY
DATE: 02-05-07
SUBMITTED BY: PHILIP L. DINELLO, CHIEF, POST FACILITIES DEV.
FILE NO.: AF0701 A-AR07SC

US Army Corps of Engineers
Transatlantic Programs Center

AFGHAN NATIONAL POLICE HEADQUARTERS (2 STORY) COMPOUND
AFGHANISTAN
POLICE HEADQUARTERS
FINISH SCHEDULE

SHEET REFERENCE NUMBER:
A
A-7

3/9/2007
h:\projects\afghanistan\af0701\af0701\arc\af0701A-ar07sc.dwg

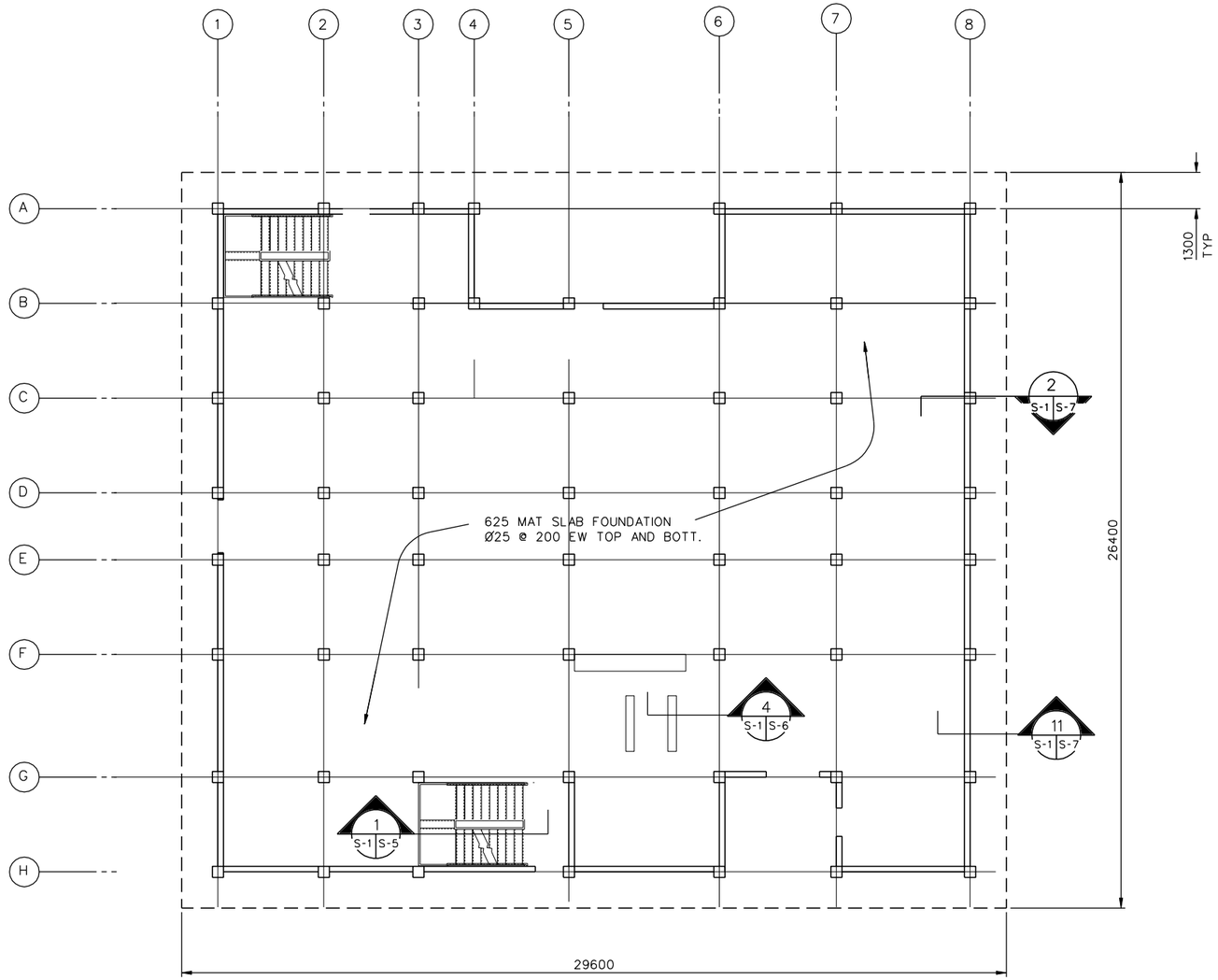

FOUNDATION PLAN

SCALE- 1:100

1. DESIGN LOADS (SERVICE)

   LIVE LOADS:

   ROOF: 1.0 KPA (20 PSF)
   OTHERS: 4.8 KPA (100 PSF)
   8.9 KN (2.0 K) CONCENTRATED LOAD

   WIND LOADS PER IBC-2003

   USING A "3-SECOND" WIND VELOCITY OF 125 KPH (78 MPH), EXPOSURE C AND IMPORTANCE FACTOR I=1.0

   EARTHQUAKE LOADS PER IBC-2003:

   USING A SEISMICITY: S_s=1.65g AND S_1 =0.75g

2. MATERIALS:

   CONCRETE: 28 MPa (4 KSI)
   CYLINDER STRENGTH AT 28 DAYS

   REINFORCING: ASTM A615 GRADE 60 (60 KSI)

   WELDED WIRE FABRIC: ASTM A185

   CONCRETE MASONRY UNITS:
   ASTM C90, TYPE I (NORMAL WEIGHT, MOISTURE CONTROLLED) MORTAR, ASTM C270, TYPE S
   GROUT, ASTM C 476
   JOINT REINFORCEMENT, LADDER TYPE

3. WORK THESE STRUCTURAL DRAWINGS WITH THE STANDARD-DETAILS DRAWINGS.

4. A RELATIVE (DATUM) FINISH FLOOR ELEVATION EQUAL TO 100.00 M. IS USED AS REFERENCE ELEVATION FOR ALL STRUCTURAL DRAWINGS. REFER TO CIVIL DRAWINGS FOR ACTUAL FINISH ELEVATIONS.

5. NO CONTROL JOINTS IN THE MAT SLAB..

6. FOUNDATIONS ARE DESIGNED USING AN ALLOWABLE BEARING PRESSURE OF 0.75 KG/SQ. CM (1500 PSF), AND BOTTOM OF FOOTINGS ARE PLACED AS SHOWN ON DRAWINGS. GEOTECHNICAL INVESTIGATION SHALL CONFIRM BEARING CAPACITY TO BE NO LESS THAN 0.75 KG/SQ CM. IF GEOTECHNICAL INVESTIGATION SHOWS LESS THAN 0.75 KG/SQ CM THE CONTRACTOR SHALL REDESIGN FOOTINGS BASED ON THE GEOTECHNICAL INVESTIGATION. SEE SPECIFICAITON 01015 PARAGRAPH, GEOTECHNICAL, FOUNDATION AND SURVEY.

7. MAT SLAB FOUNDATION IS OFFSET FROM OUTSIDE COLUMN LINES 1.3 METERS.

8. ALL COLUMNS ARE C-1 AS SHOWN ON S-6 COLUMN TYPES.

1 0 1 2 3 4 5 6 7 8 9
1:100

UNLESS OTHERWISE NOTED, LINEAR DIMENSIONS SHOWN ARE IN MILLIMETERS.

SYMBOL	DESCRIPTION	DATE	APP

DESIGNED BY: TCP
DWN BY: TCP
CHK BY: KGO
DATE: 02-05-07
SUBMITTED BY: PHILIP L. DINELLO, CHIEF, PDT FACILITIES DEV.
FILE NO.: AF0701 A-S801PN

US Army Corps of Engineers
Transatlantic Programs Center

AFGHAN NATIONAL POLICE HEADQUARTERS (2 STORY) COMPOUND
AFGHANISTAN

POLICE HEADQUARTERS
FOUNDATION PLAN

SHEET REFERENCE NUMBER:
A
S-1

3/9/2007
h:\projects\afghanistan\af0701\af0701b\str\AF0701A-S801PN.dwg

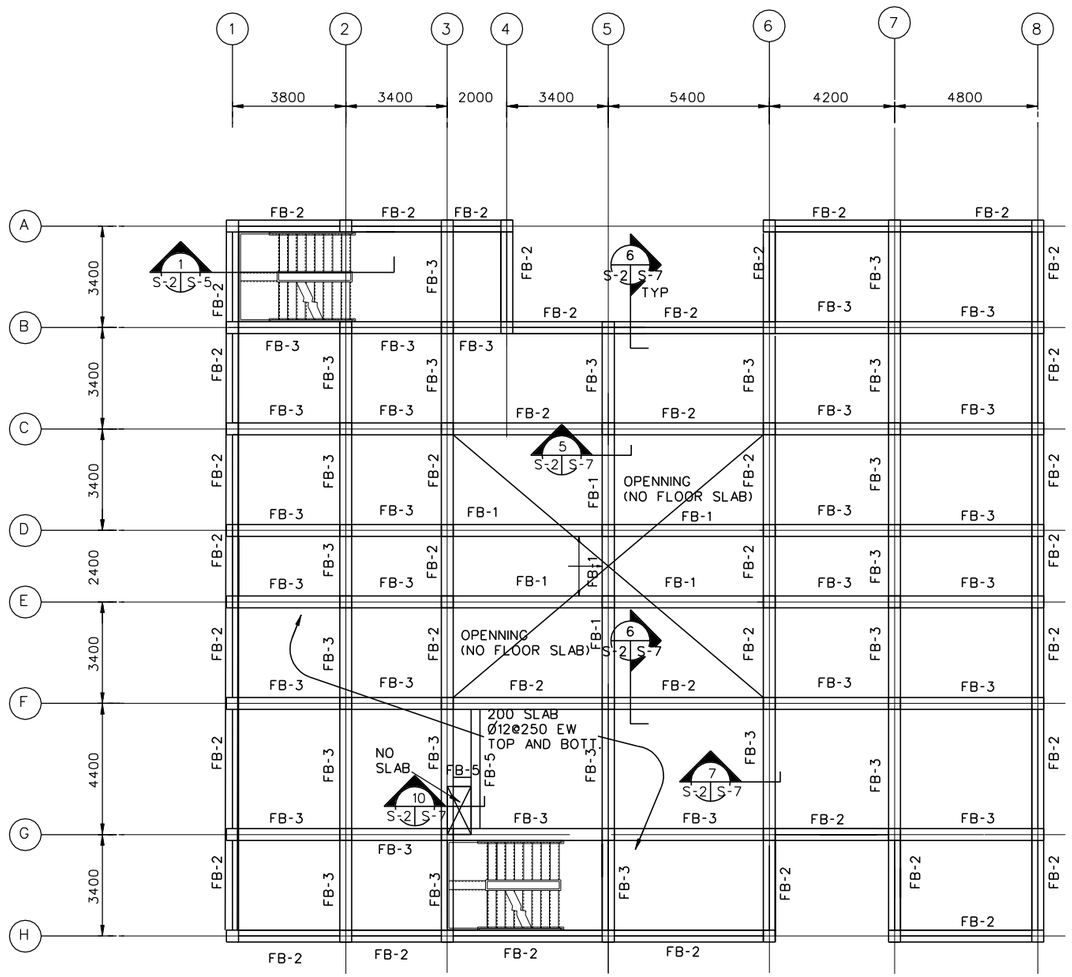

SECOND FLOOR STRUCTURAL PLAN
SCALE: 1:100

NOTES:

1. ALL COLUMNS ON THE SECOND FLOOR ARE C2 AS SHOWN ON S-6 COLUMN TYPES.

SYMBOL	DESCRIPTION	DATE	APP.

DESIGNED BY: TCP
DATE: 02-05-07
DWN BY: TCP
SUBMITTED BY: PHILIP L. DINELLO, CHIEF, POST FACILITIES DEV.
CHK BY: KGO
FILE NO.: AF0701 A-SB02PN

US Army Corps of Engineers
Transatlantic Programs Center

AFGHAN NATIONAL POLICE HEADQUARTERS (2 STORY) COMPOUND
AFGHANISTAN
POLICE HEADQUARTERS
SECOND FLOOR STRUCTURAL PLAN

SHEET REFERENCE NUMBER:
A
S-2

UNLESS OTHERWISE NOTED, LINEAR DIMENSIONS SHOWN ARE IN MILLIMETERS
1:100

3/9/2007
h:\projects\afghanistan\af0701\af0701b\str\AF0701A-SB02PN.dwg

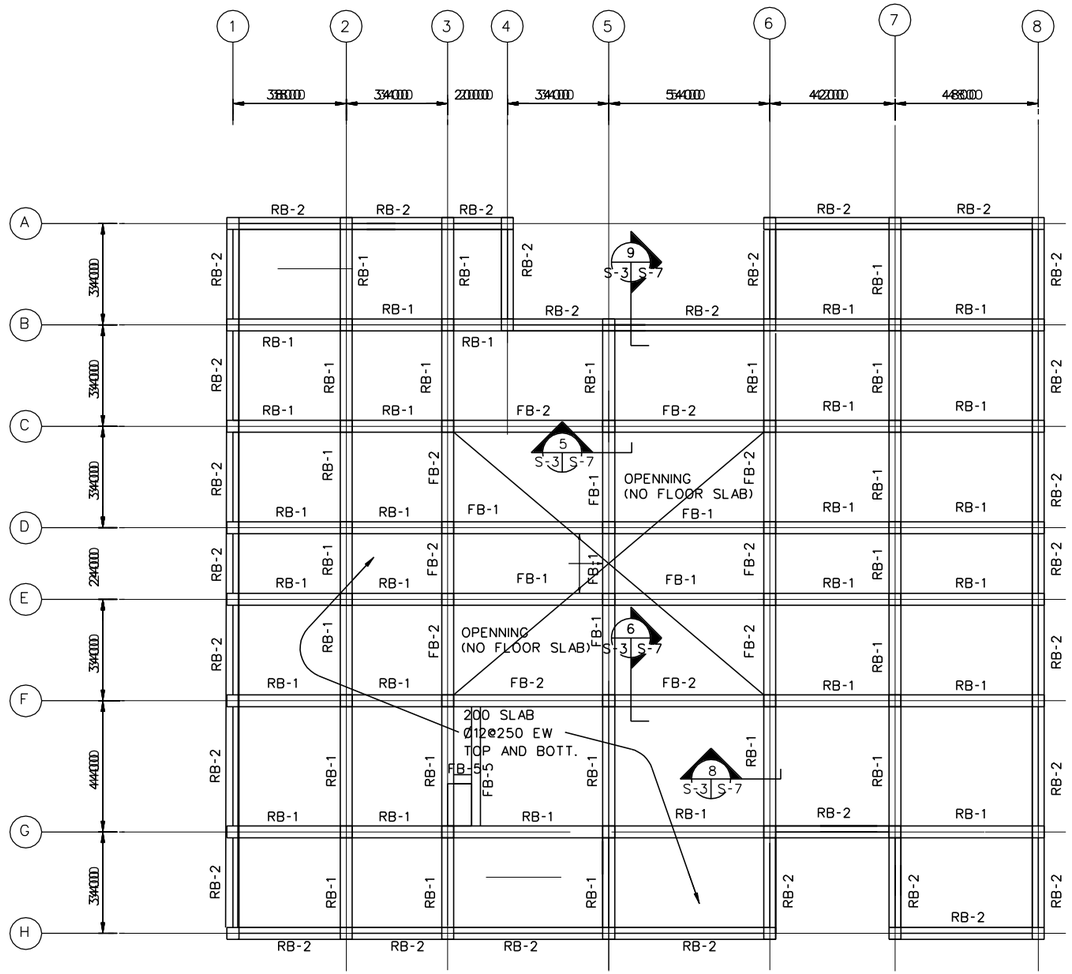

LOWER ROOF STRUCTURAL PLAN
SCALE= 1:100

NOTE:

1. ALL COLUMNS ARE C2, AS SHOWN ON S-6 COLUMN TYPES.

2. A WOODEN TRUSS SYSTEM IS TO BE PROVIDED ON TOP OF THE ROOF SLAB. THIS IS TO BE DESIGNED AND CONSTRUCTED BY THE CONTRACTOR. THE TRUSSES SHALL USE NO LESS THAN 50 X 100 LUMBER AND THE TRUSSES SHALL BE SPACED NO MORE THAN 1 METER ON CENTER. SEE SHEET A-5 FOR MORE INFORMATION.

DESIGN LOADS:
A. LIVE LOAD: 1.0 KPA (20 PSF)
B. WIND LOAD: PER IBC-2003
USE A "3-SECOND" WIND VELOCITY OF 125 KPH (78 MPH),
EXPOSURE C AND IMPORTANCE FACTOR I=1.0.
C. EARTHQUAKE LOAD: PER IBC-2003
SEISMICITY: S_a=1.65g AND S_1=0.75g

1 0 1 2 3 4 5 6 7 8 9
1:100

UNLESS OTHERWISE NOTED, LINEAR DIMENSIONS SHOWN ARE IN MILLIMETERS.

SYMBOL	DESCRIPTION	DATE	APP.

DESIGNED BY: TCP
DATE: 02-05-07
DWN BY: TCP
SUBMITTED BY: PHILIP L. DINELLO, CHIEF, POST FACILITIES DEV.
CHK BY: KGO
FILE NO.: AF0701 A-SB03PN

US Army Corps of Engineers
Transatlantic Programs Center

AFGHAN NATIONAL POLICE HEADQUARTERS (2 STORY) COMPOUND
AFGHANISTAN
POLICE HEADQUARTERS
LOWER ROOF STRUCTURAL PLAN

SHEET REFERENCE NUMBER:
A
S-3

3/9/2007
h:\projects\afghanistan\af0701\af0701\str\AF0701A-SB03PN.dwg

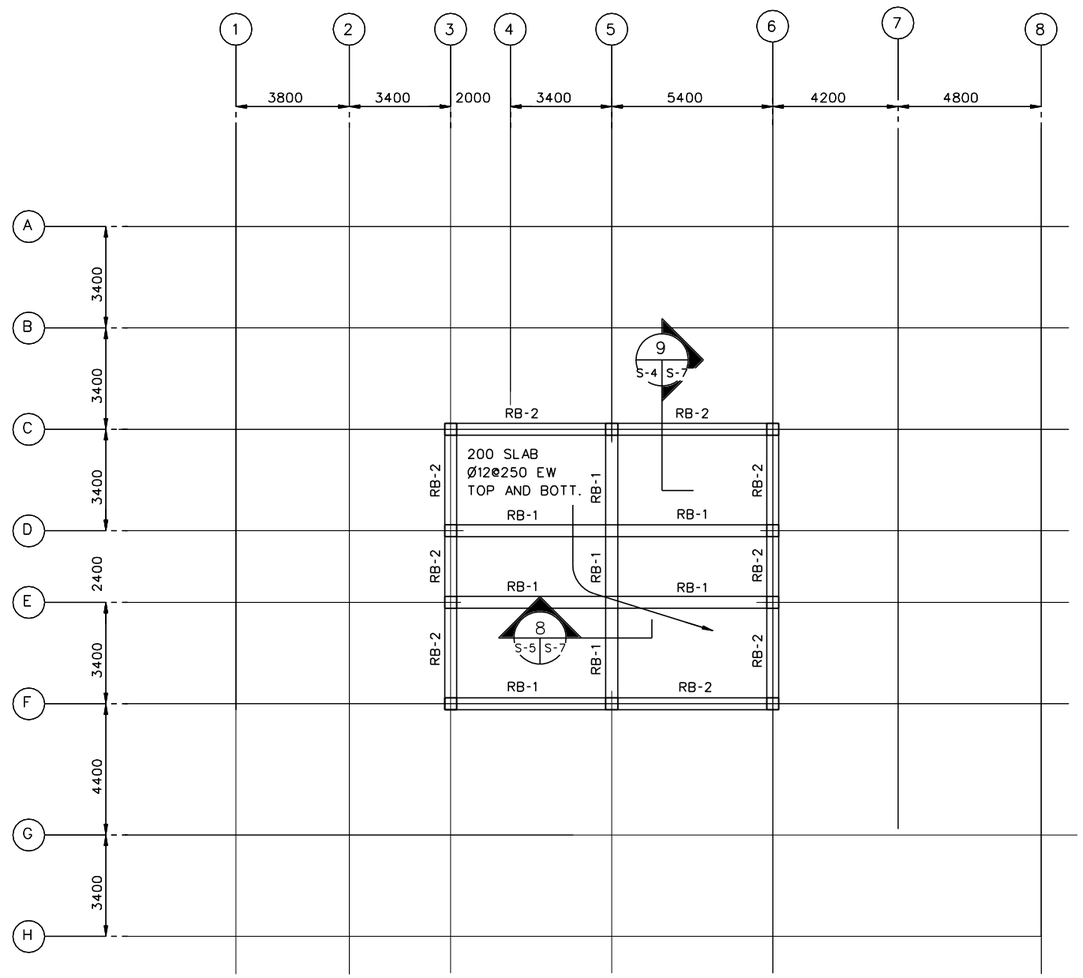

UPPER ROOF STRUCTURAL PLAN
SCALE- 1:100

NOTE:

1. ALL COLUMNS ARE C2, AS SHOWN ON S-6 COLUMN TYPES.

2. A WOODEN TRUSS SYSTEM IS TO BE PROVIDED ON TOP OF THE ROOF SLAB. THIS IS TO BE DESIGNED AND CONSTRUCTED BY THE CONTRACTOR. THE TRUSSES SHALL USE NO LESS THAN 50 X 100 LUMBER AND THE TRUSSES SHALL BE SPACED NO MORE THAN 1 METER ON CENTER. SEE SHEET A-5 FOR MORE INFORMATION.

DESIGN LOADS:
A. LIVE LOAD: 1.0 KPA (20 PSF)
B. WIND LOAD: PER IBC-2003
USE A "3-SECOND" WIND VELOCITY OF 125 KPH (78 MPH), EXPOSURE C AND IMPORTANCE FACTOR I=1.0.
C. EARTHQUAKE LOAD: PER IBC-2003
SEISMICITY: S_a=1.65g AND S^1=0.75g

1 0 1 2 3 4 5 6 7 8 9
1:100

UNLESS OTHERWISE NOTED, LINEAR DIMENSIONS SHOWN ARE IN MILLIMETERS.

SYMBOL	DESCRIPTION	DATE	APP

DESIGNED BY: TCP
DATE: 02-05-07
DWN BY: TCP
SUBMITTED BY: PHILIP L. DINELLO, CHIEF, PDT FACILITIES DEV.
CHK BY: KGO
FILE NO.: AF0701 A-SB04PN

US Army Corps of Engineers
Transatlantic Programs Center

AFGHAN NATIONAL POLICE HEADQUARTERS (2 STORY) COMPOUND
AFGHANISTAN
POLICE HEADQUARTERS
UPPER ROOF STRUCTURAL PLAN

SHEET REFERENCE NUMBER:
A
S-4

3/9/2007
h:\projects\afghanistan\af0701\af0701b\str\AF0701A-SB04PN.dwg

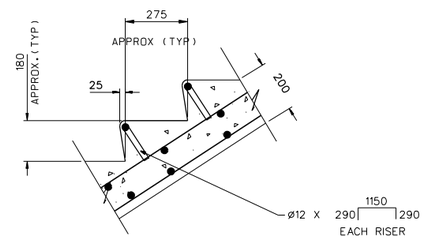

DETAIL
SCALE NTS

A
S-5 S-5

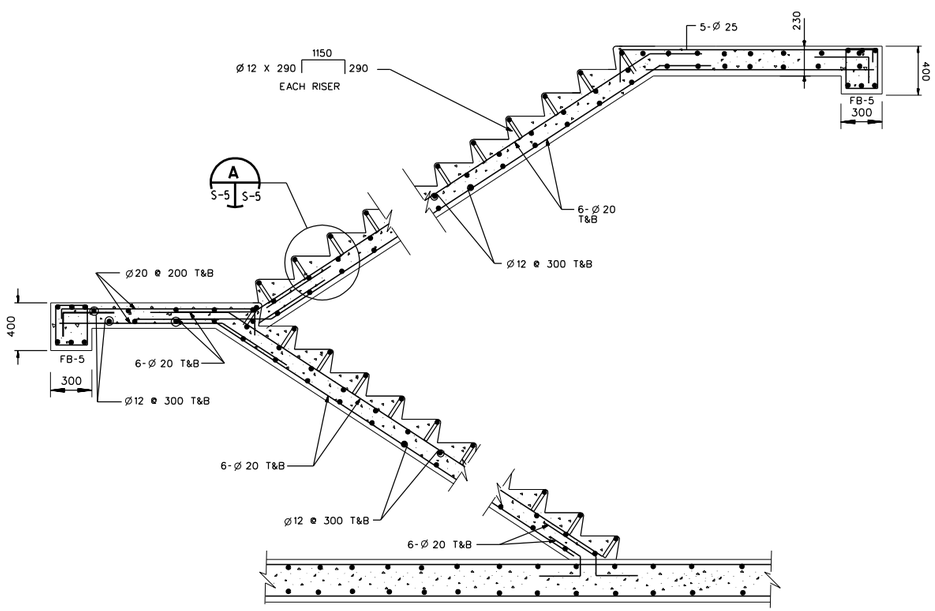

INTERIOR TYPICAL STAIRWAY
SCALE

SECTION
SCALE NTS

1
S-2 S-5

1 .50 0 1
1:20

UNLESS OTHERWISE NOTED, LINEAR DIMENSIONS SHOWN ARE IN MILLIMETERS.

SYMBOL	DESCRIPTION	DATE	APP

DESIGNED BY: TCP
DATE: 02-05-07
DWN BY: TCP
SUBMITTED BY: PHILIP L. DINELLO, CHIEF, POST FACILITIES DEV.
CHK BY: KGO
FILE NO.: AF0701 A-SB05SE

US Army Corps of Engineers
Transatlantic Programs Center

AFGHAN NATIONAL POLICE HEADQUARTERS (2 STORY) COMPOUND
AFGHANISTAN

POLICE HEADQUARTERS
INTERIOR TYPICAL STAIRWAY

SHEET REFERENCE NUMBER:
A
S-5

3/9/2007
h:\projects\afghanistan\af0701\af0701\str\AF0701A-SB05SE.dwg

COLUMN SCHEDULE

COLUMN GRIDS	STORY	COLUMN TYPE	CONCRETE DIMENSIONS		VERTICAL REINFORCEMENT	TIE REINFORCEMENT		
			WIDTH	DEPTH		SIZE	SPACING	SETS
A-1, A-2, A-3, A-4, A-6, A-7, A-8 B-1, B-2, B-3, B-4, B-5, B-6, B-7, B-8 C-1, C-2, C-3, C-5, C-6, C-7, C-8 D-1, D-2, D-3, D-5, D-6, D-7, D-8 E-1, E-2, E-3, E-5, E-6, E-7, E-8 F-1, F-2, F-3, F-5, F-6, F-7, F-8 G-1, G-2, G-3, G-5, G-6, G-7, G-8 H-1, H-2, H-3, H-5, H-6, H-7, H-8	FIRST FLOOR	C1	600	600	16-Ø 25	Ø13	400	3
A-1, A-2, A-3, A-4, A-6, A-7, A-8 B-1, B-2, B-3, B-4, B-5, B-6, B-7, B-8 C-1, C-2, C-3, C-5, C-6, C-7, C-8 D-1, D-2, D-3, D-5, D-6, D-7, D-8 E-1, E-2, E-3, E-5, E-6, E-7, E-8 F-1, F-2, F-3, F-5, F-6, F-7, F-8 G-1, G-2, G-3, G-5, G-6, G-7, G-8 H-1, H-2, H-3, H-5, H-6, H-7, H-8	SECOND FLOOR	C2	600	600	8-Ø 25	Ø13	400	2
C-3, C-5, C-6 D-3, D-5, D-6 E-3, E-5, E-6 F-3, F-5, F-6	THIRD LEVEL	C2	600	600	8-Ø 25	Ø13	400	2

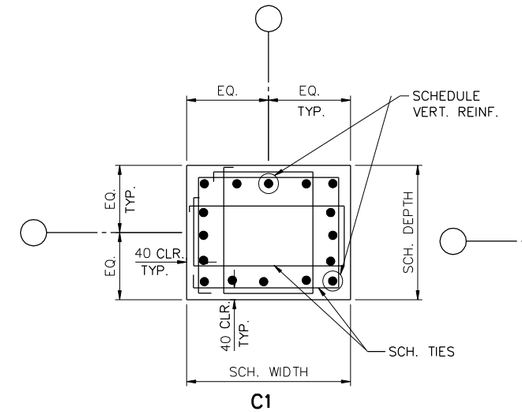

C1

COLUMNS C-1 ARE FOR GROUND FLOOR ONLY

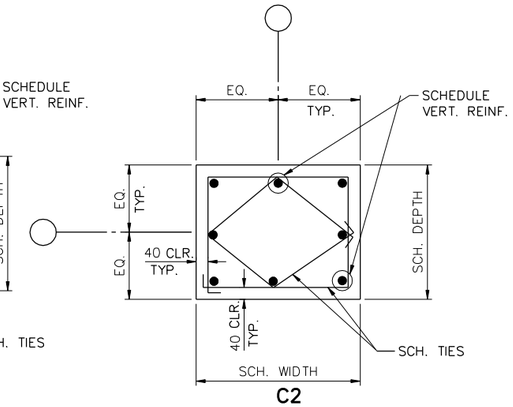

C2

COLUMNS C-2 ARE FOR ALL FLOORS ABOVE GROUND FLOOR. TWO INTERIOR (NOT CENTER) REBAR FROM EACH FACE SHALL NOT BE CONTINUED BEYOND FIRST FLOOR.

COLUMN TYPES

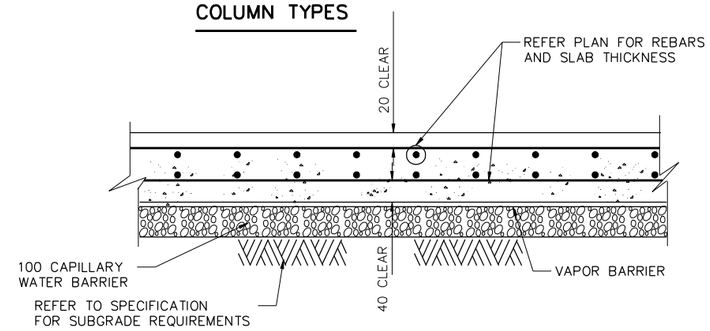

MAT SLAB WITH TOP & BOTTOM REINFORCEMENTS

DETAIL D
N.T.S. S-6 | S-6

DETAIL A
N.T.S. S-6 | S-6

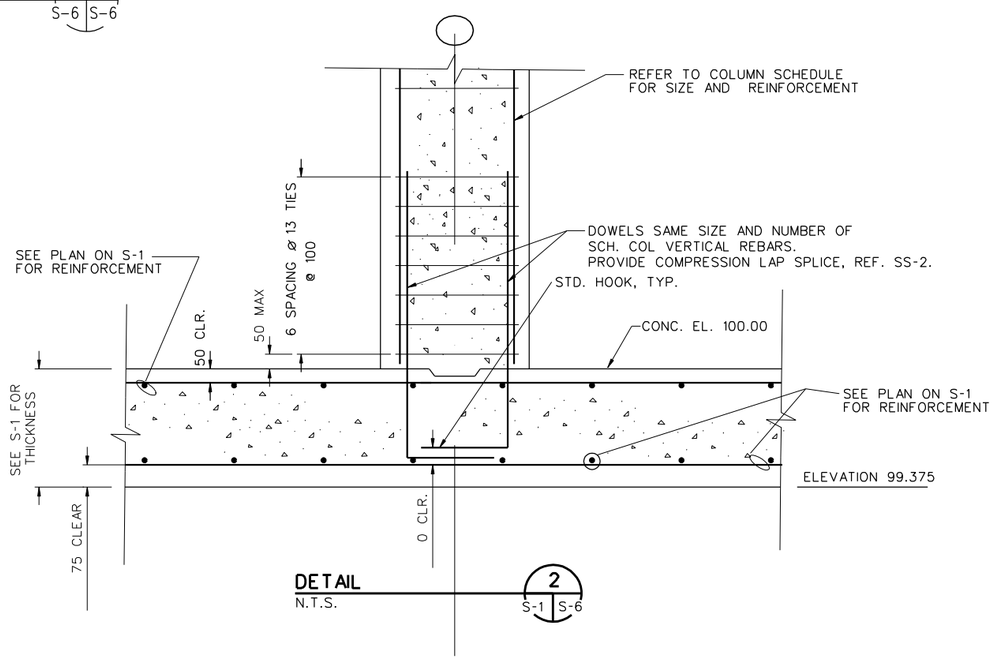

DETAIL 2
N.T.S. S-1 | S-6

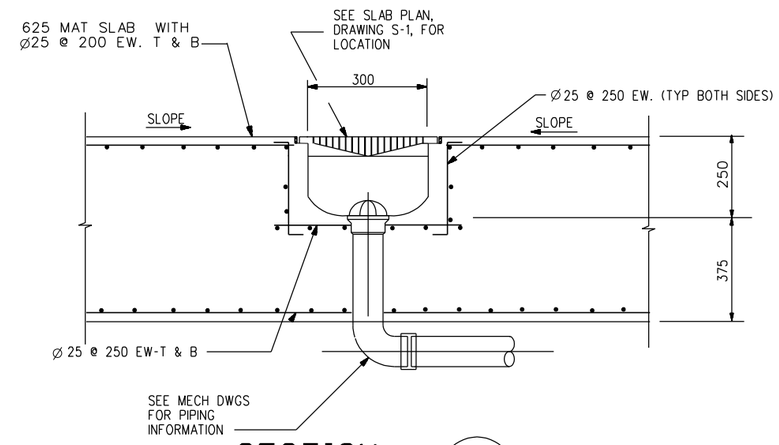

SECTION 4
N.T.S. S-2 | S-6

UNLESS OTHERWISE NOTED, LINEAR DIMENSIONS SHOWN ARE IN MILLIMETERS.

SYMBOL	DESCRIPTION	DATE	APP.

DESIGNED BY: RG
DATE: 02-05-07
DWN BY: TCP
SUBMITTED BY: PHILIP L. DINELLO, CHIEF, POST FACILITIES DEV.
CHK BY: KGO
FILE NO.: AF0701 A-SF06DT

US Army Corps of Engineers
Transatlantic Programs Center

AFGHAN NATIONAL POLICE HEADQUARTERS (2 STORY) COMPOUND
AFGHANISTAN

POLICE HEADQUARTERS
SLAB-ON-GRADE DETAILS

SHEET REFERENCE NUMBER:
A
S-6

3/9/2007
h:\projects\afghanistan\af0701\af0701b\str\AF0701A-SF06DT.dwg

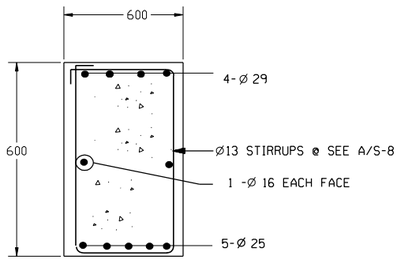

FB-1

SECTION 5 (S-3 | S-7)
SCALE 1:10

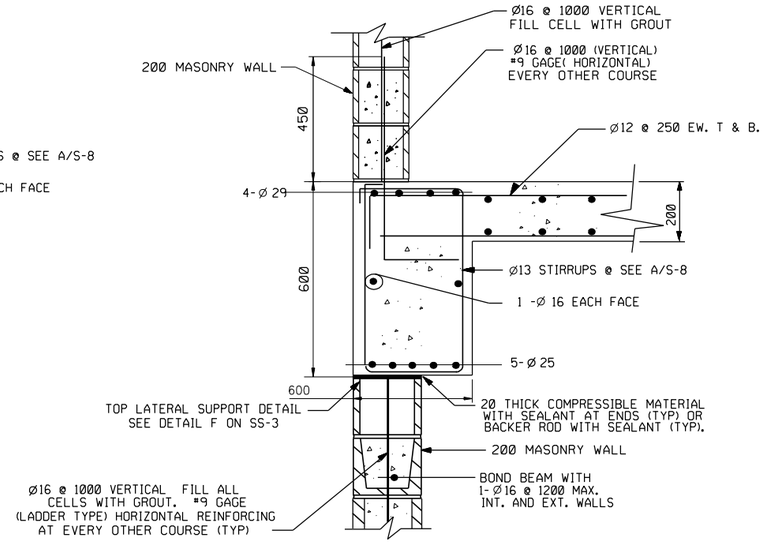

FB-2

SECTION 6 (S-3 | S-7)
SCALE 1:10

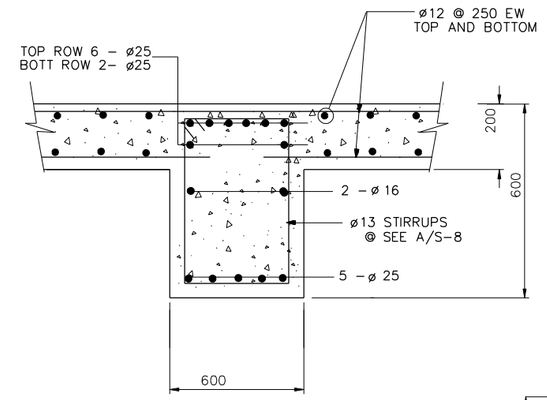

FB-3

SECTION 7 (S-3 | S-7)
SCALE 1:10

NOTE:

1. GRADE BEAM REINFORCING IS CONTINUOUS THROUGH THE COLUMN AND COLUMN FOOTINGS.

2. COORDINATE REBAR PLACEMENT BETWEEN BEAMS OF DIFFERENT WIDTHS SO THAT A MAXIMUM NUMBER OF REBAR IS CONTINUOUS. BEND BARS AS REQUIRED.

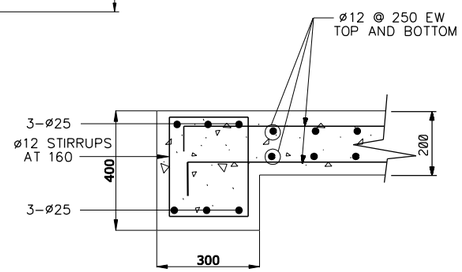

FB-5

SECTION 10 (S-2, S-3, S-5 | S-7)
SCALE 1:10

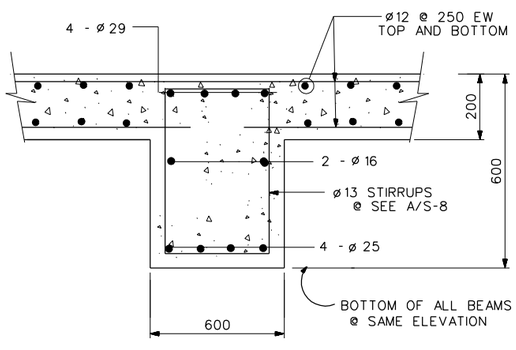

RB-1

SECTION 8 (S-3, S-4 | S-7)
SCALE

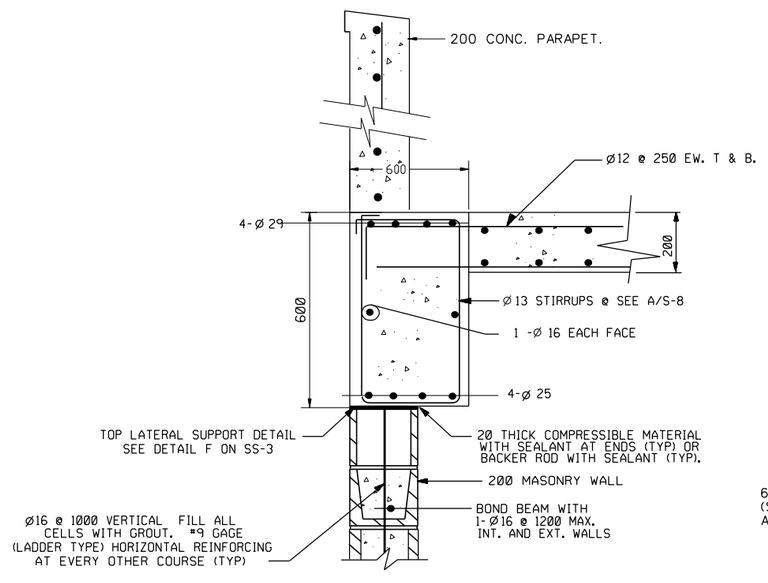

RB-2

SECTION 9 (S-3 | S-7)
SCALE 1:10

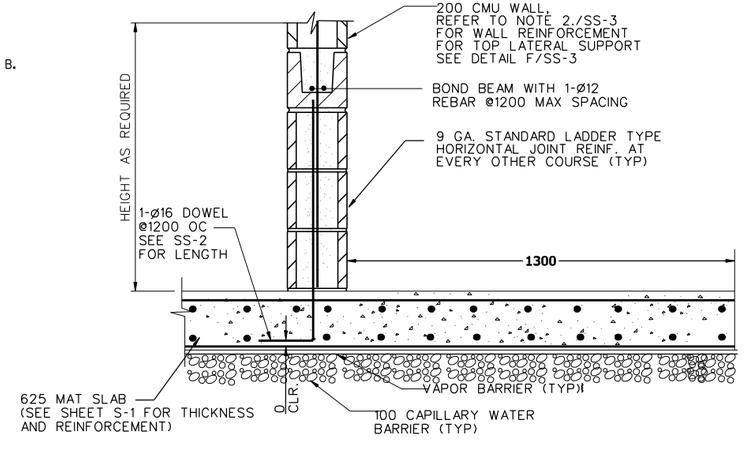

EXTERIOR WALL DETAIL
SCALE: 1:10

SECTION 11 (S-1 | S-7)
SCALE 1:10

UNLESS OTHERWISE NOTED, LINEAR DIMENSIONS SHOWN ARE IN MILLIMETERS.

SYMBOL	DESCRIPTION	DATE	APR

DESIGNED BY: RG
DATE: 02-05-07
DWN BY: TCP
SUBMITTED BY: PHILIP L. DINELLO, CHIEF, POST FACILITIES DEV.
CHK BY: KGO
FILE NO.: AF0701 A-SF07DT

US Army Corps of Engineers
Transatlantic Programs Center

AFGHAN NATIONAL POLICE HEADQUARTERS (2 STORY) COMPOUND
AFGHANISTAN

POLICE HEADQUARTERS
ROOF BEAM AND STRUCTURAL SLAB DETAILS

SHEET REFERENCE NUMBER:
A
S-7

3/9/2007
h:\projects\afghanistan\af0701\af0701b\str\AF0701A-SF07DT.dwg

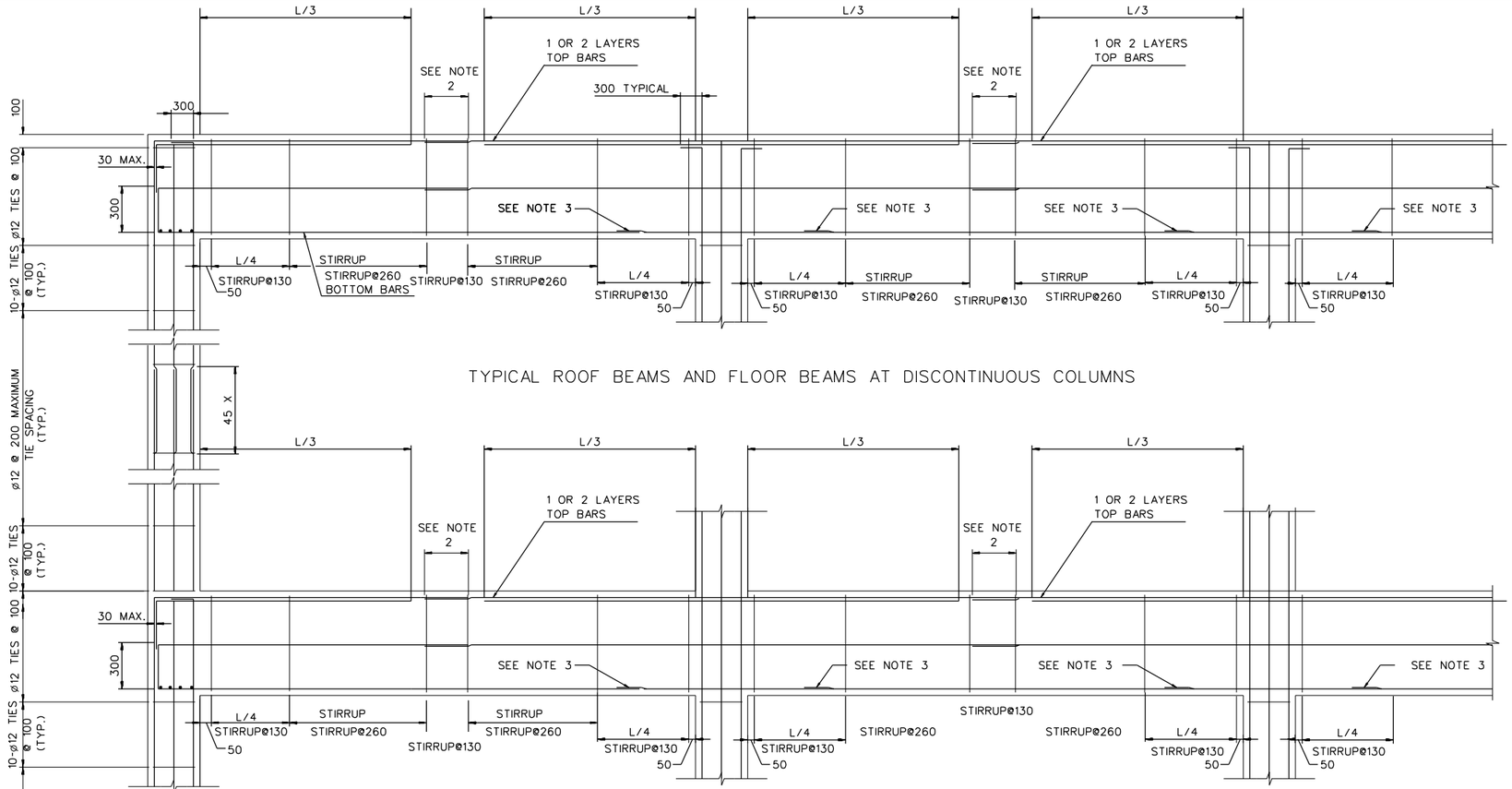

TYPICAL ROOF BEAMS AND FLOOR BEAMS AT DISCONTINUOUS COLUMNS

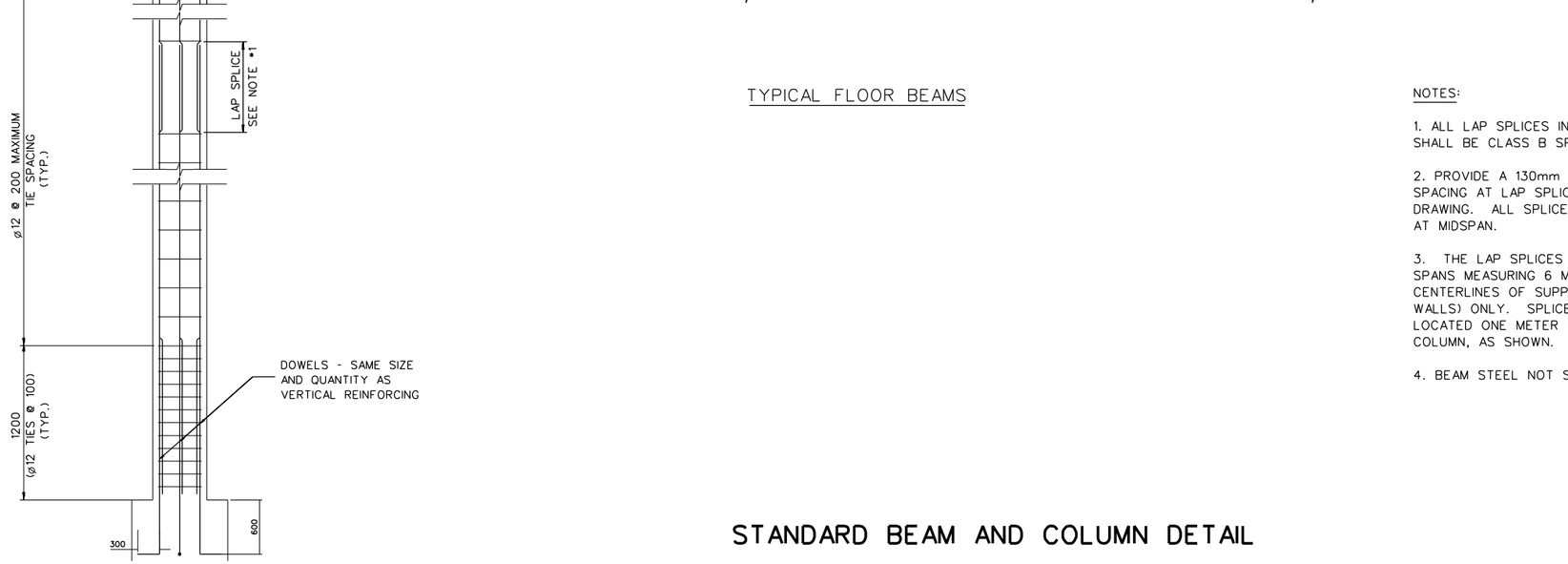

TYPICAL FLOOR BEAMS

ALL COLUMN TIES ARE Ø 12

NOTES:

1. ALL LAP SPLICES IN BEAMS AND COLUMNS SHALL BE CLASS B SPLICES

2. PROVIDE A 130mm MAXIMUM OF STIRRUP SPACING AT LAP SPLICES, AS SHOWN ON DRAWING. ALL SPLICES NOTED SHALL OCCUR AT MIDSPAN.

3. THE LAP SPLICES SHOWN SHALL BE PERMITTED IN SPANS MEASURING 6 METERS OR MORE FROM CENTERLINES OF SUPPORTS (COLUMNS OR WALLS) ONLY. SPLICES INDICATED SHALL BE LOCATED ONE METER FROM THE FACE OF THE COLUMN, AS SHOWN.

4. BEAM STEEL NOT SHOWN FOR CLARITY.

STANDARD BEAM AND COLUMN DETAIL

UNLESS OTHERWISE NOTED, LINEAR DIMENSIONS SHOWN ARE IN MILLIMETERS.

SYMBOL	DESCRIPTION	DATE	APP.

DESIGNED BY: TCP
DATE: 02-05-07
DWN BY: RG
SUBMITTED BY: PHILIP L. DINELLO, CHIEF, POST FACILITIES DEV.
CHK BY: KGO
FILE NO.: AF0701 A-SB08DT

US Army Corps of Engineers
Transatlantic Programs Center

AFGHAN NATIONAL POLICE HEADQUARTERS (2 STORY) COMPOUND
AFGHANISTAN

POLICE HEADQUARTERS
STANDARD BEAM AND COLUMN DETAIL

SHEET REFERENCE NUMBER:
A
S-8

3/9/2007
h:\projects\afghanistan\af0701\af0701b\str\AF0701A-SB08DT.dwg

NOTES:
1. FOR LEGENDS, ABBREVIATIONS AND STANDARD MECHANICAL DETAILS SEE SHEETS SM-1 AND SM-3.
2. FOR EQUIPMENT SCHEDULES AND CONTROL DIAGRAMS SEE SHEET SM-2.
3. ALL DIMENSIONS ARE IN MM (IN) UNLESS NOTED OTHERWISE.
4. PROVIDE EACH EXHAUST FAN WITH MANUFACTURER'S STANDARD EXHAUST GRILL AND GRAVITY BACKDRAFT DAMPER.
5. PROVIDE 300 x 200 ALL-WEATHER LOUVER WITH BIRDSCREEN.
6. KITCHEN EXHAUST HOOD WITH ALUMINUM FILTERS AND SEALED DUCT CONNECTION TO EXHAUST FAN. SIZE OF HOOD TO MATCH COOKING EQUIPMENT PROVIDED.
7. INSTALL EXHAUST FAN EF-A-11 IS SIZED AT A MINIMUM CAPACITY BASED ON 1200W X 3000L HOOD: ITS CAPACITY SHALL BE REVISED UPWARD TO MATCH AIRFLOW PERFORMANCE REQUIRED BY THE KITCHEN HOOD EQUIPMENT MANUFACTURER.
8. INSTALL OUTDOOR CONDENSING UNIT ON A 300 MM HIGH STEEL STAND ON A 150 MM THICK CONCRETE PAD ON GRADE.

DUCT SIZING LEGEND

1	200 X 100
2	200 X 150
3	200 X 200
4	350 X 300
5	375 X 300

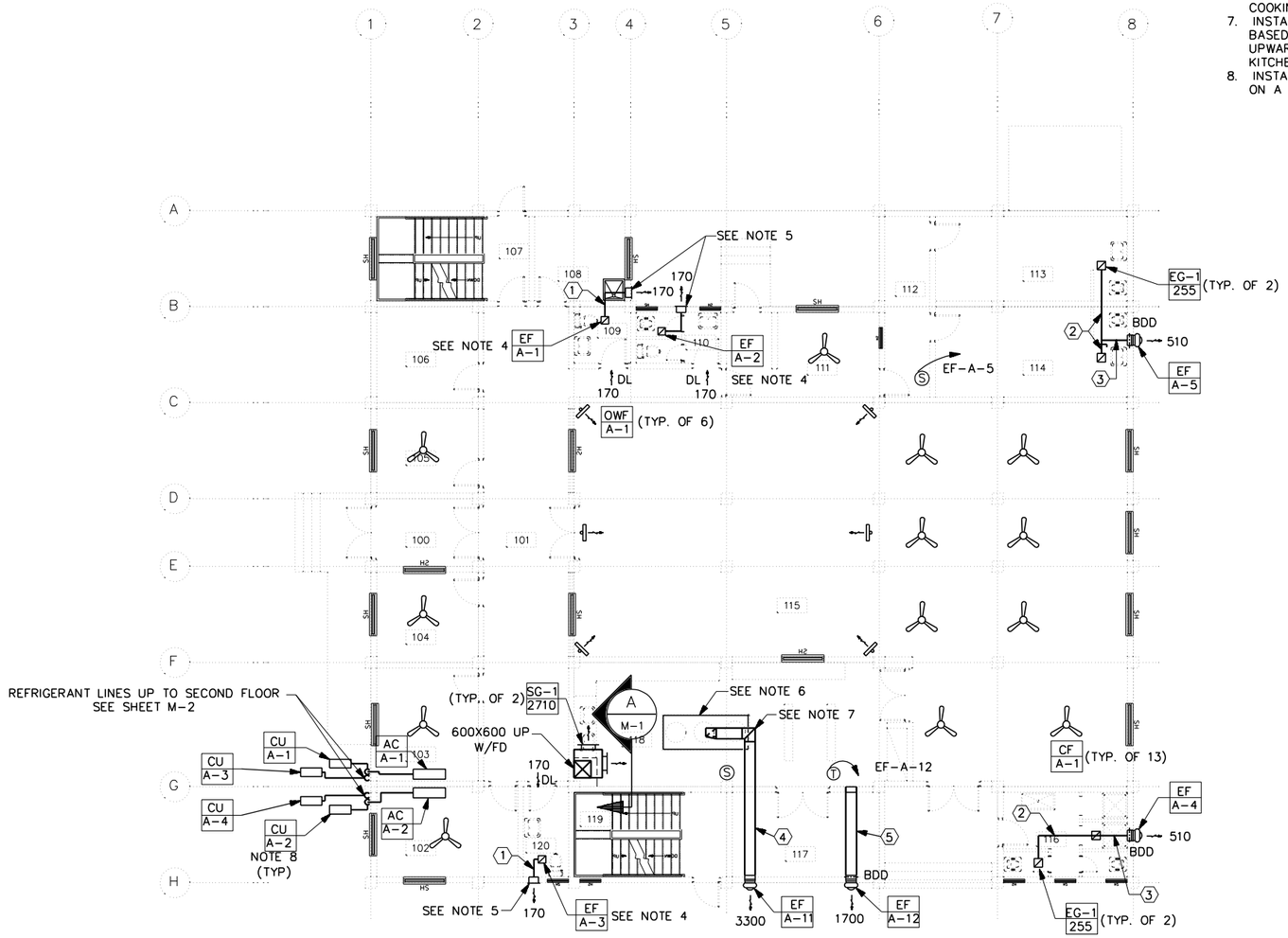

FIRST FLOOR HVAC PLAN
SCALE: 1:100

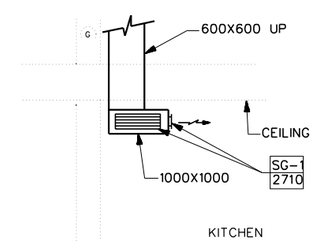

DETAIL A M-1
SCALE 1: 50

1:50 (1 0 1 2 3 4)

1:100 (1 0 1 2 3 4 5 6 7 8 9)

UNLESS OTHERWISE NOTED, LINEAR DIMENSIONS SHOWN ARE IN MILLIMETERS.

SYMBOL	DESCRIPTION	DATE	APP

DESIGNED BY: RMS
DATE: 02-05-07
DWN BY: RMS
SUBMITTED BY: SYED EMAYATULLA CHIEF, PDU BLDG SYSTEMS
CHK BY: SE
FILE NO.: AF0701 A-MH01PN

US Army Corps of Engineers
Transatlantic Programs Center

AFGHAN NATIONAL POLICE HEADQUARTERS (2 STORY) COMPOUND
AFGHANISTAN
POLICE HEADQUARTERS
FIRST FLOOR HVAC PLAN

SHEET REFERENCE NUMBER:
A
M-1

3/9/2007
h:\projects\afghanistan\af0701\af0701\mec\AF0701A-MH01PN.DWG

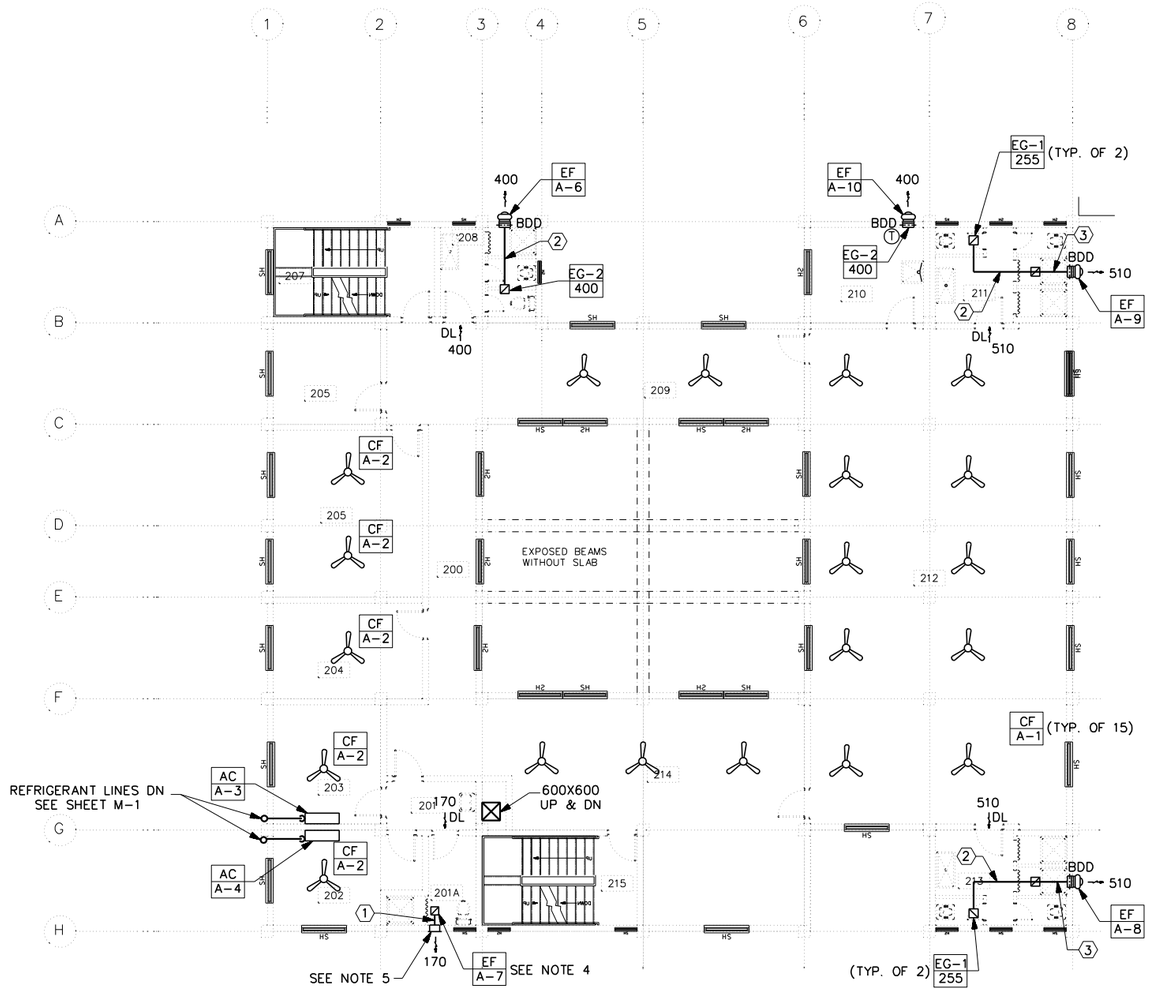

SECOND FLOOR HVAC PLAN

SCALE= 1:100

DUCT SIZING LEGEND

1. 200 X 100
2. 200 X 150
3. 200 X 200

1 0 1 2 3 4 5 6 7 8 9
1:100

UNLESS OTHERWISE NOTED, LINEAR DIMENSIONS SHOWN ARE IN MILLIMETERS.

SYMBOL	DESCRIPTION	DATE	APP

DESIGNED BY: RMS
DATE: 02-05-07
DWN BY: RMS
SUBMITTED BY: SYED EMAYATULLA CHIEF, PDU BLDG SYSTEMS
CHK BY: SE
FILE NO.: AF0701 A-MH02PN

US Army Corps of Engineers
Transatlantic Programs Center

AFGHAN NATIONAL POLICE HEADQUARTERS (2 STORY) COMPOUND
AFGHANISTAN
POLICE HEADQUARTERS
SECOND FLOOR HVAC PLAN

SHEET REFERENCE NUMBER:
A
M-2

3/9/2007
h:\projects\afghanistan\af0701\af0701b\mec\AF0701A-MH02PN.DWG

NOTES:

1. FOR ALL GAS SPACE HEATERS LOCATED NEXT TO EXTERIOR WALL, PROVIDE A DIRECT VENT (DOUBLE WALL TYPE) THROUGH REAR WALL TO ALLOW FOR FRESH AIR INTAKE AND FOR DIRECT VENTING OF ALL COMBUSTION PRODUCTS. INSTALL VENT PIPE, FITTINGS AND CAP AS PROVIDED BY AND IN ACCORDANCE WITH THE FURNACE MANUFACTURER RECOMMENDATIONS.
2. FOR ALL GAS SPACE HEATERS LOCATED AWAY FROM THE EXTERIOR WALL PROVIDE CONVENTIONAL VENT OR STACK AS PER THE HEATER MANUFACTURER RECOMMENDATION. PRIOR TO INSTALLATION THE CONTRACTOR SHALL VERIFY LOCATION OF EACH HEATER AND SUBMIT VENT ROUTING AND DISCHARGE LOCATIONS FOR APPROVAL BY THE CONTRACTING OFFICER.
3. PROVIDE 25MM GAS SUPPLY LINE WITH A SERVICE SHUT-OFF VALVE DOWN TO THE COOKING STOVES. GAS PIPING AND CONNECTION TO INDIVIDUAL STOVES SHALL BE IN CONFORMANCE WITH STOVE MANUFACTURER RECOMMENDATIONS.
4. METAL FLUE SIZE SHALL BE AS PER HEATER MANUFACTURER RECOMMENDATION AND ROUTED CLOSE TO THE CEILING.

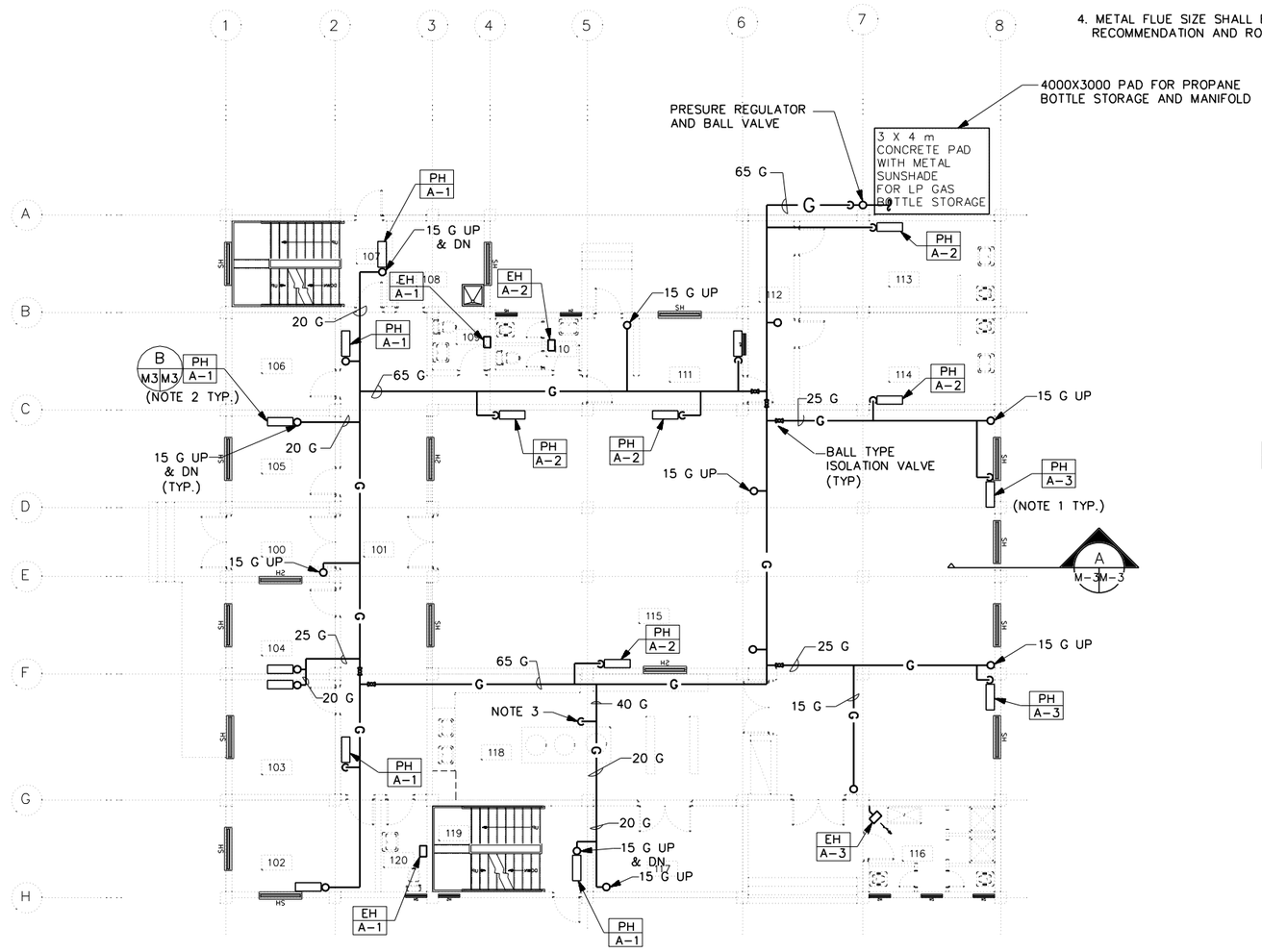

FIRST FLOOR HEATING PLAN
SCALE• 1:100

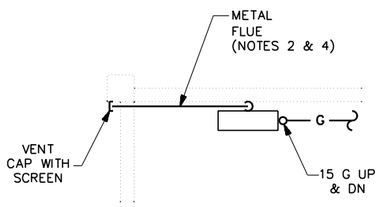

DETAIL B
NOT TO SCALE
M-3 M-3 M-4

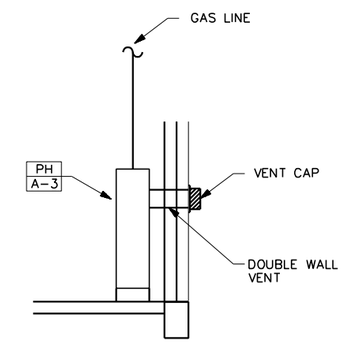

DETAIL A
NOT TO SCALE
M-3 M-3 M-4

1 0 1 2 3 4 5 6 7 8 9
1:100

UNLESS OTHERWISE NOTED, LINEAR DIMENSIONS SHOWN ARE IN MILLIMETERS.

SYMBOL	DESCRIPTION	DATE	APP

DESIGNED BY: RMS
DATE: 02-05-07
DWN BY: RMS
SUBMITTED BY: SYED EMAYATULLA CHIEF, PDU BLDG SYSTEMS
CHK BY: SE
FILE NO.: AF0701 A-MH03PN

US Army Corps of Engineers
Transatlantic Programs Center

AFGHAN NATIONAL POLICE HEADQUARTERS (2 STORY) COMPOUND
AFGHANISTAN
POLICE HEADQUARTERS
FIRST FLOOR HEATING PLAN

SHEET REFERENCE NUMBER:
A
M-3

3/9/2007
h:\projects\afghanistan\af0701\af0701\mec\AF0701A-MH03PN.DWG

NOTES:

1. FOR ALL GAS SPACE HEATERS LOCATED NEXT TO EXTERIOR WALL, PROVIDE A DIRECT VENT (DOUBLE WALL TYPE) THROUGH REAR WALL TO ALLOW FOR FRESH AIR INTAKE AND FOR DIRECT VENTING OF ALL COMBUSTION PRODUCTS. INSTALL VENT PIPE, FITTINGS AND CAP AS PROVIDED BY AND IN ACCORDANCE WITH THE FURNACE MANUFACTURER RECOMMENDATIONS.

2. FOR ALL GAS SPACE HEATERS LOCATED AWAY FROM THE EXTERIOR WALL PROVIDE CONVENTIONAL VENT OR STACK AS PER THE HEATER MANUFACTURER RECOMMENDATION. PRIOR TO INSTALLATION THE CONTRACTOR SHALL VERIFY LOCATION OF EACH HEATER AND SUBMIT VENT ROUTING AND DISCHARGE LOCATIONS FOR APPROVAL BY THE CONTRACTING OFFICER.

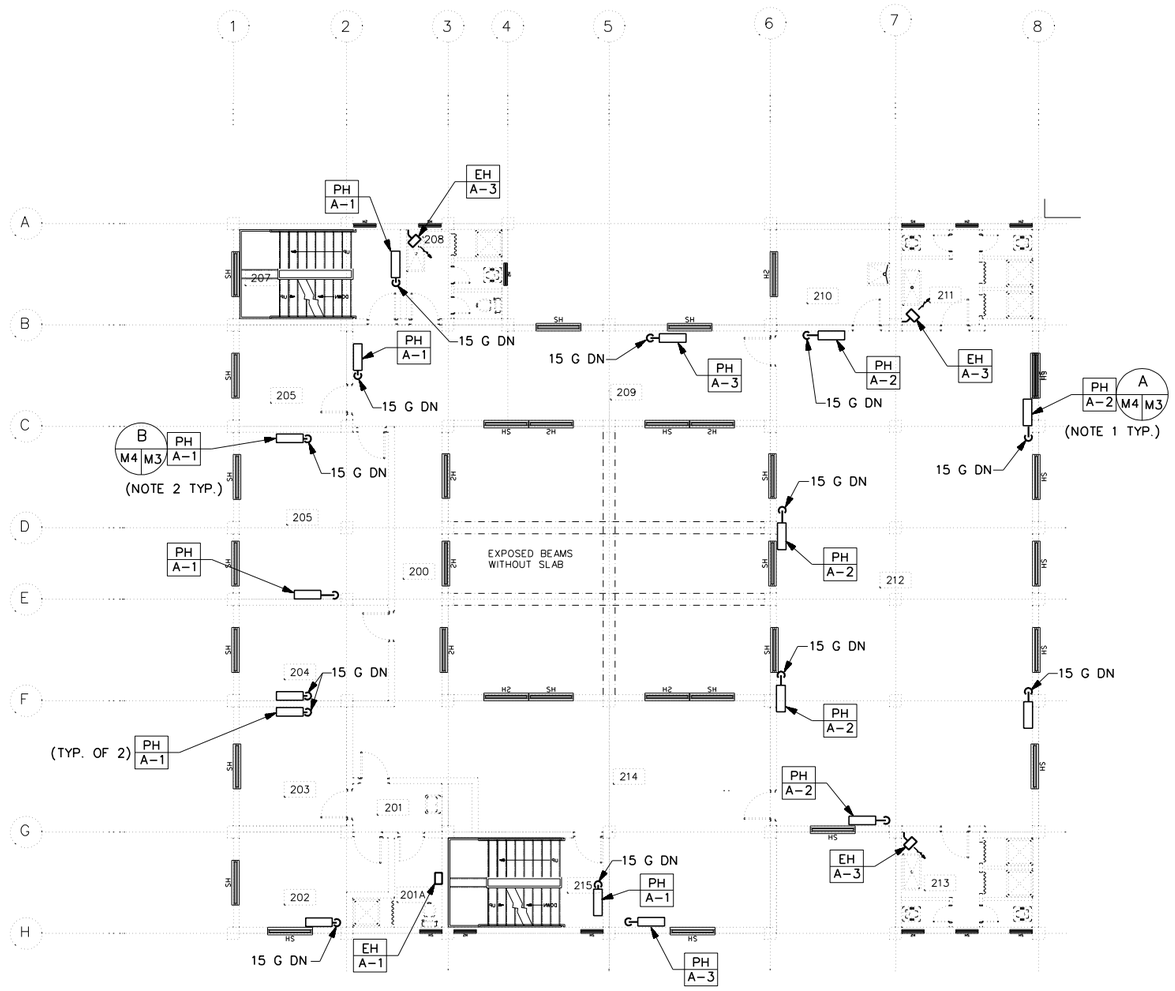

SECOND FLOOR HEATING PLAN
SCALE: 1:100

1 0 1 2 3 4 5 6 7 8 9
1:100

UNLESS OTHERWISE NOTED, LINEAR DIMENSIONS SHOWN ARE IN MILLIMETERS.

SYMBOL	DESCRIPTION	DATE	APP.

DESIGNED BY: RMS
DATE: 02-05-07
DWN BY: RMS
SUBMITTED BY: SYED EMAYATULLA, CHIEF, PDU, BLDG SYSTEMS
CHK BY: SE
FILE NO.: AF0701 A-MH04PN

US Army Corps of Engineers
Transatlantic Programs Center

AFGHAN NATIONAL POLICE HEADQUARTERS (2 STORY) COMPOUND
AFGHANISTAN
POLICE HEADQUARTERS
SECOND FLOOR HEATING PLAN

SHEET REFERENCE NUMBER:
A
M-4

3/9/2007
h:\projects\afghanistan\af0701\af0701\mec\AF0701A-MH04PN.DWG

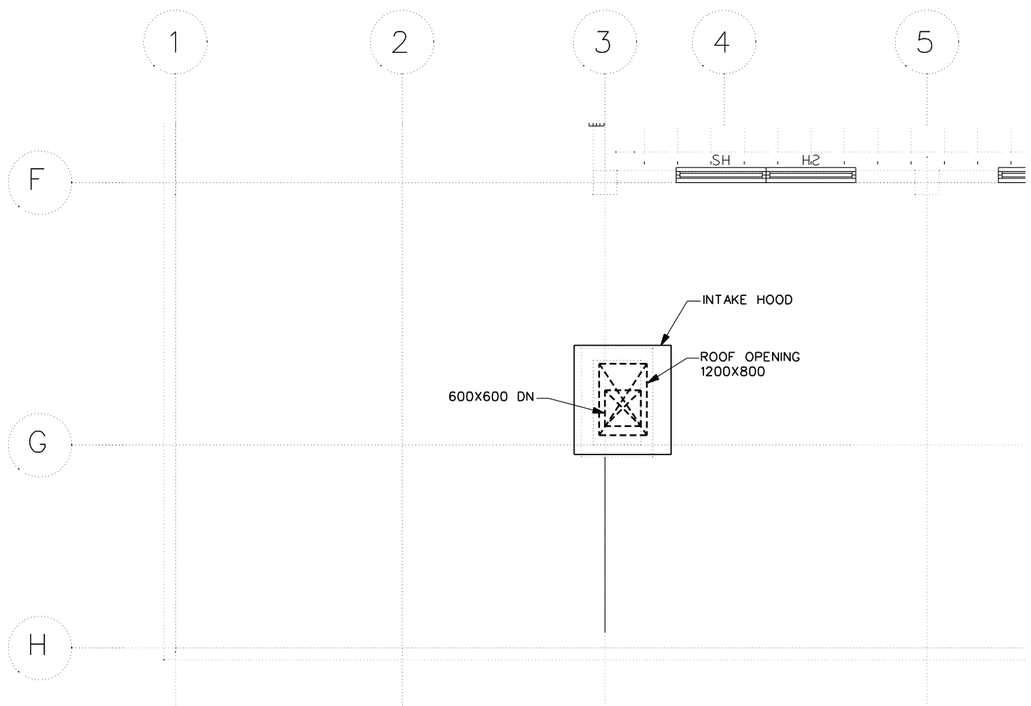

PARTIAL ROOF PLAN
SCALE- 1: 50

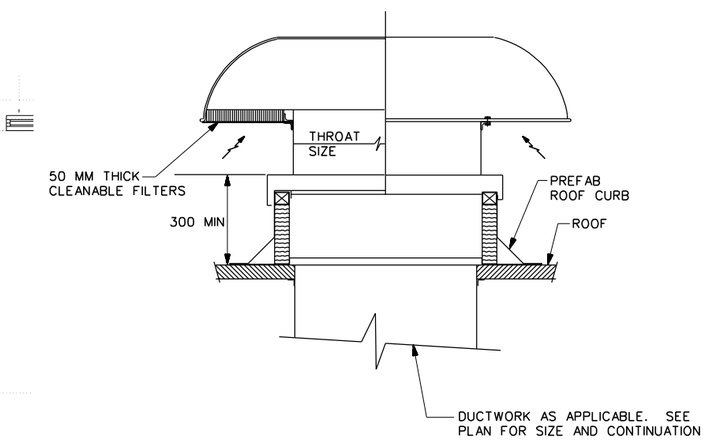

NOTE:
1. FILTER AREA SELECTION AT MAXIMUM FACE VELOCITY OF 300 FPM OR 1.52 MPS.

AIR INTAKE HOOD (A / M-5)
NOT TO SCALE

1 0 1 2 3 4
1:50

UNLESS OTHERWISE NOTED, LINEAR DIMENSIONS SHOWN ARE IN MILLIMETERS.

SYMBOL	DESCRIPTION	DATE	APP

DESIGNED BY: RMS
DATE: 02-05-07
DWN BY: JMC
SUBMITTED BY: SYED ENAYATULLA, CHIEF, PDU BLDG SYSTEMS
CHK BY: SE
FILE NO.: AF0701 A-MH05PN

US Army Corps of Engineers
Transatlantic Programs Center

AFGHAN NATIONAL POLICE HEADQUARTERS (2 STORY) COMPOUND
AFGHANISTAN
POLICE HEADQUARTERS
PARTIAL ROOF PLAN

SHEET REFERENCE NUMBER:
A
M-5

3/9/2007
h:\projects\afghanistan\af0701\af0701b\mec\AF0701A-MH05PN.DWG

NOTES:

1. FOR LEGENDS, ABBREVIATIONS AND PLUMBING FIXTURE SCHEDULE SEE SHEET SP-1.
2. FOR STANDARD PLUMBING DETAILS SEE SHEET SP-2.
3. MINIMUM GREASE INTERCEPTOR FLOW RATE SHALL BE 135 LPM (35 GPM).
4. PROVIDE WALL MOUNTED, 15MM DIA. 12.5m LONG HOSE REEL IN THE KITCHEN.

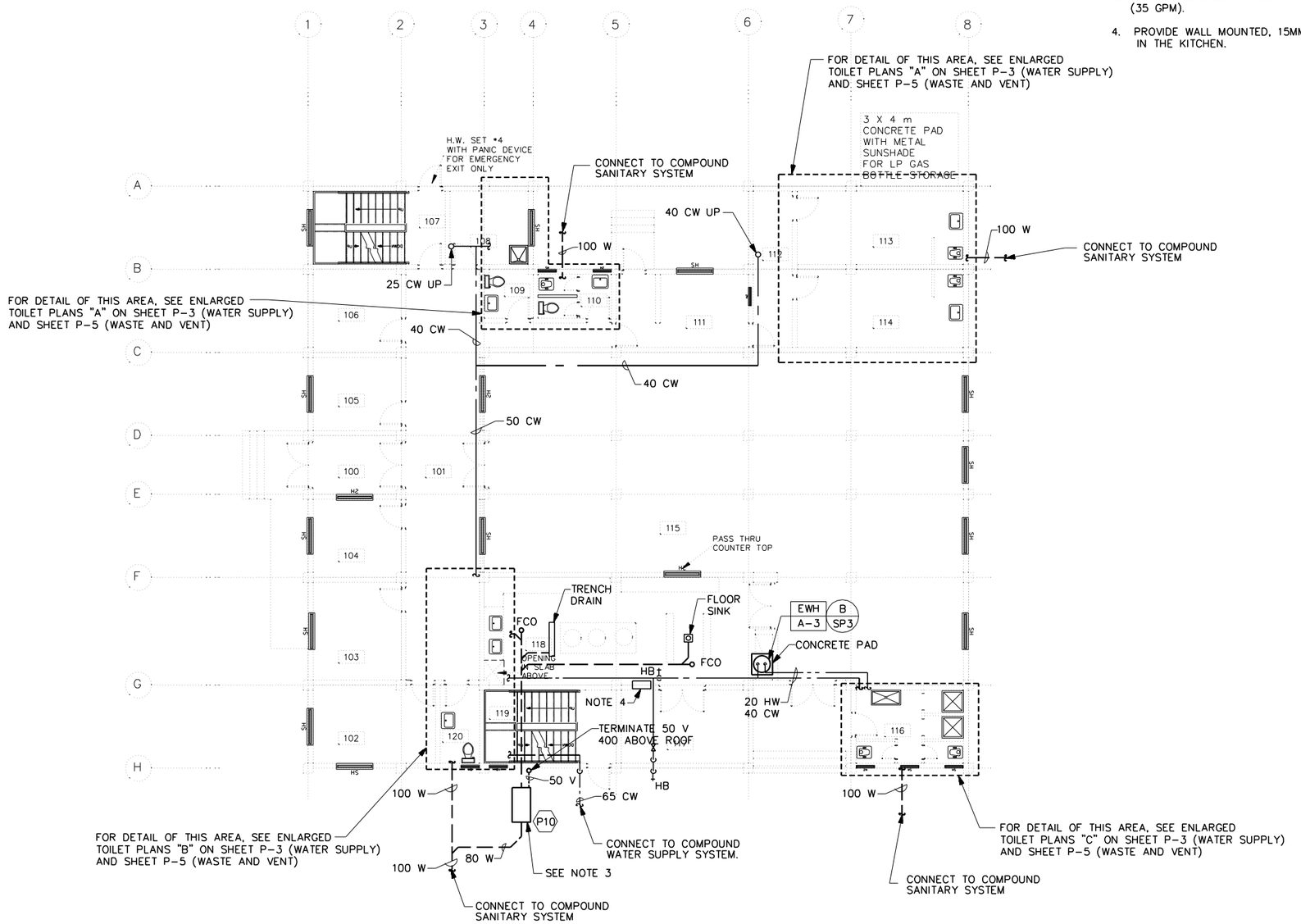

FIRST FLOOR PLUMBING PLAN
SCALE: 1:100

1 0 1 2 3 4 5 6 7 8 9
1:100

UNLESS OTHERWISE NOTED, LINEAR DIMENSIONS SHOWN ARE IN MILLIMETERS.

SYMBOL	DESCRIPTION	DATE	APP

DESIGNED BY: RMS
DATE: 02-05-07
DWN BY: RMS
SUBMITTED BY: SYED EMAYATULLA CHIEF, PDU BLDG SYSTEMS
CHK BY: SE
FILE NO.: AF0701 A-MP01PN

US Army Corps of Engineers
Transatlantic Programs Center

AFGHAN NATIONAL POLICE HEADQUARTERS (2 STORY) COMPOUND
AFGHANISTAN
POLICE HEADQUARTERS
FIRST FLOOR PLUMBING PLAN

SHEET REFERENCE NUMBER:
A
P-1

3/9/2007
h:\projects\afghanistan\af0701\af0701\mec\AF0701A-MP01PN.DWG

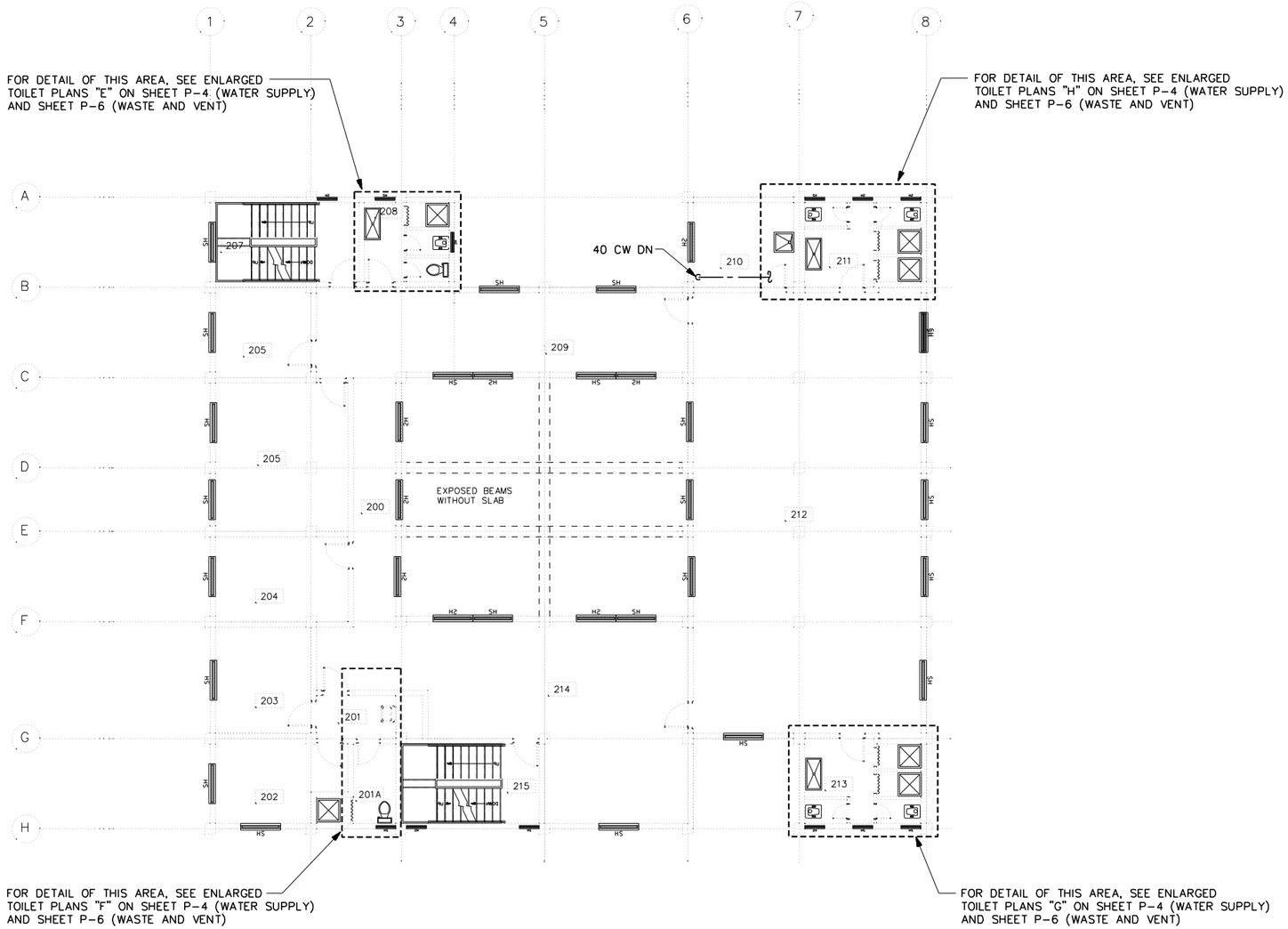

SECOND FLOOR PLUMBING PLAN
SCALE= 1:100

1 0 1 2 3 4 5 6 7 8 9
1:100

UNLESS OTHERWISE NOTED, LINEAR DIMENSIONS SHOWN ARE IN MILLIMETERS.

SYMBOL	DESCRIPTION	DATE	APP

DESIGNED BY: RMS
DATE: 02-05-07
DWN BY: RMS
SUBMITTED BY: SYED EMAYATULLA CHIEF, PDU BLDG SYSTEMS
CHK BY: SE
FILE NO.: AF0701 A-MP02PN

US Army Corps of Engineers
Transatlantic Programs Center

AFGHAN NATIONAL POLICE HEADQUARTERS (2 STORY) COMPOUND
AFGHANISTAN
POLICE HEADQUARTERS
SECOND FLOOR PLUMBING PLAN

SHEET REFERENCE NUMBER:
A
P-2

3/9/2007
h:\projects\afghanistan\af0701\af0701b\mec\AF0701A-MP02PN.DWG

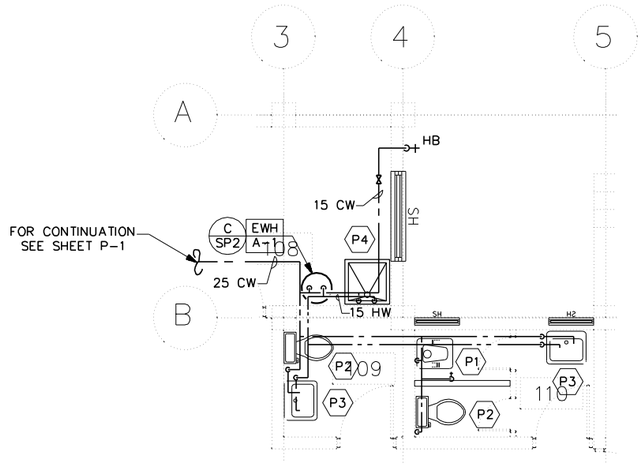

ENLARGED FIRST FLOOR TOILET PLAN "A"- WATER SUPPLY
SCALE 1: 50

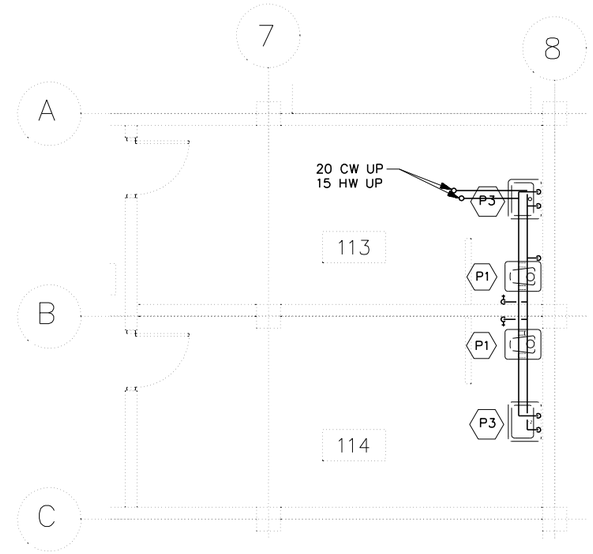

ENLARGED FIRST FLOOR TOILET PLAN "D"- WATER SUPPLY
SCALE 1: 50

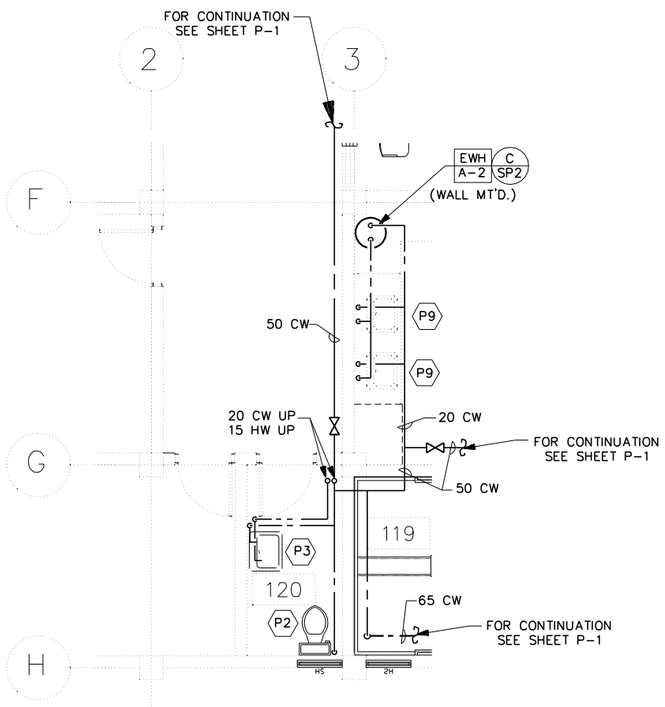

ENLARGED FIRST FLOOR TOILET PLAN "B"- WATER SUPPLY
SCALE 1: 50

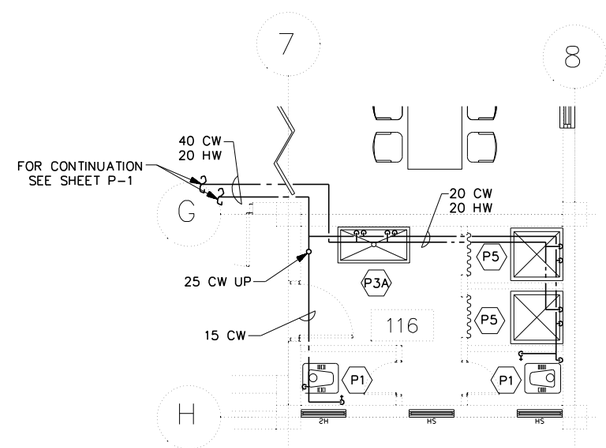

ENLARGED FIRST FLOOR TOILET PLAN "C"- WATER SUPPLY
SCALE 1: 50

1 0 1 2 3 4
1:50

UNLESS OTHERWISE NOTED, LINEAR DIMENSIONS SHOWN ARE IN MILLIMETERS.

SYMBOL	DESCRIPTION	DATE	APP

DESIGNED BY: RMS
DATE: 02-05-07
DWN BY: RMS
SUBMITTED BY: SYED ENAYATULLA CHIEF, PDU BLDG SYSTEMS
CHK BY: SE
FILE NO.: AF0701 A-MP03LS

US Army Corps of Engineers
Transatlantic Programs Center

AFGHAN NATIONAL POLICE HEADQUARTERS (2 STORY) COMPOUND
AFGHANISTAN

POLICE HEADQUARTERS
FIRST FLOOR ENLARGED TOILET PLANS- WATER SUPPLY

SHEET REFERENCE NUMBER:
A
P-3

3/9/2007
h:\projects\afghanistan\af0701\af0701\mec\AF0701A-MP03LS.DWG

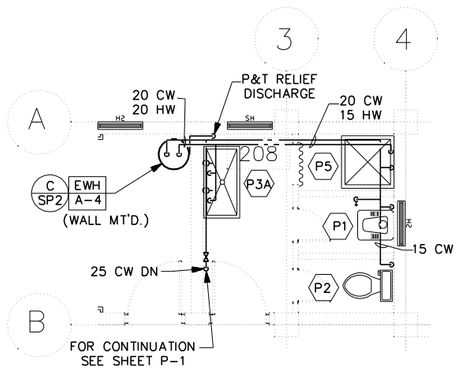

ENLARGED SECOND FLOOR TOILET PLAN "E"- WATER SUPPLY
SCALE- 1: 50

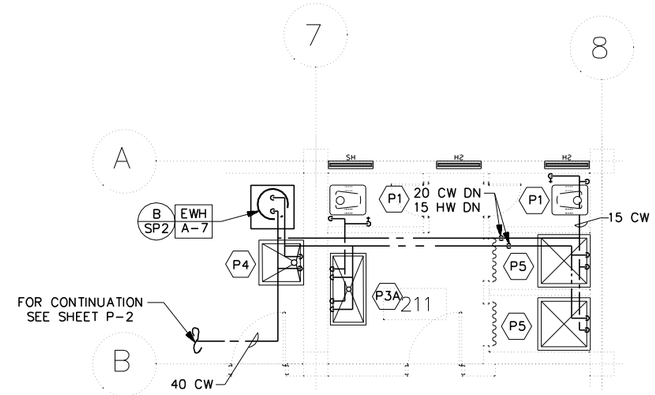

ENLARGED SECOND FLOOR TOILET PLAN "H"- WATER SUPPLY
SCALE- 1: 50

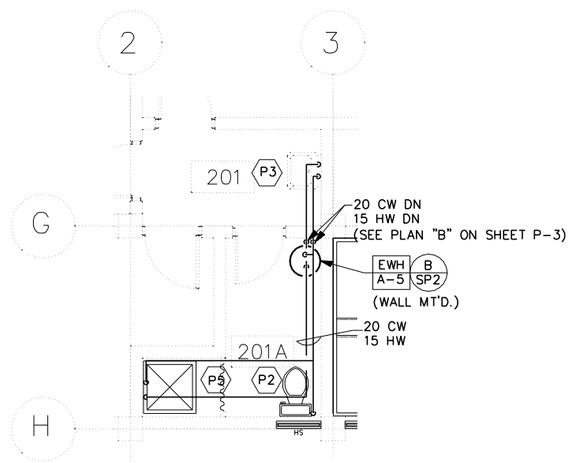

ENLARGED SECOND FLOOR TOILET PLAN "F"- WATER SUPPLY
SCALE- 1: 50

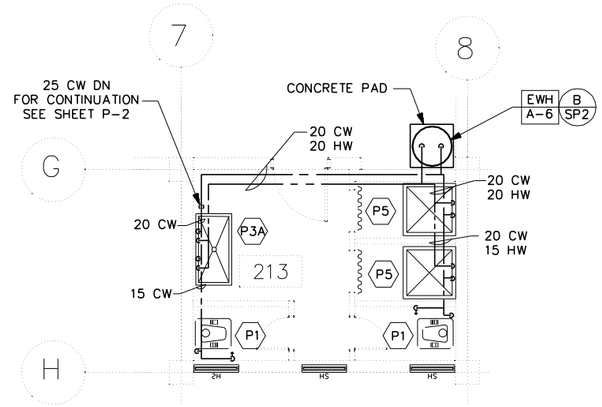

ENLARGED SECOND FLOOR TOILET PLAN "G"- WATER SUPPLY
SCALE- 1: 50

1 0 1 2 3 4
1:50

UNLESS OTHERWISE NOTED, LINEAR DIMENSIONS SHOWN ARE IN MILLIMETERS.

SYMBOL	DESCRIPTION	DATE	APP.

DESIGNED BY: RMS
DATE: 02-05-07
DWN BY: RMS
SUBMITTED BY: SYED ENAYATULLA CHIEF, PDU BLDG SYSTEMS
CHK BY: SE
FILE NO.: AF0701 A-MP04LS

US Army Corps of Engineers
Transatlantic Programs Center

AFGHAN NATIONAL POLICE HEADQUARTERS (2 STORY) COMPOUND
AFGHANISTAN
POLICE HEADQUARTERS
SECOND FLOOR ENLARGED TOILET PLANS- WATER SUPPLY

SHEET REFERENCE NUMBER:
A
P-4

3/9/2007
h:\projects\afghanistan\af0701\af0701\mec\AF0701A-MP04LS.DWG

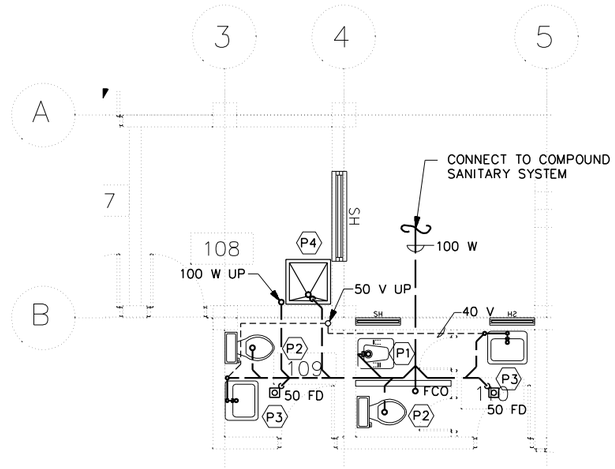

ENLARGED FIRST FLOOR TOILET PLAN "A"- WASTE AND VENT
SCALE 1: 50

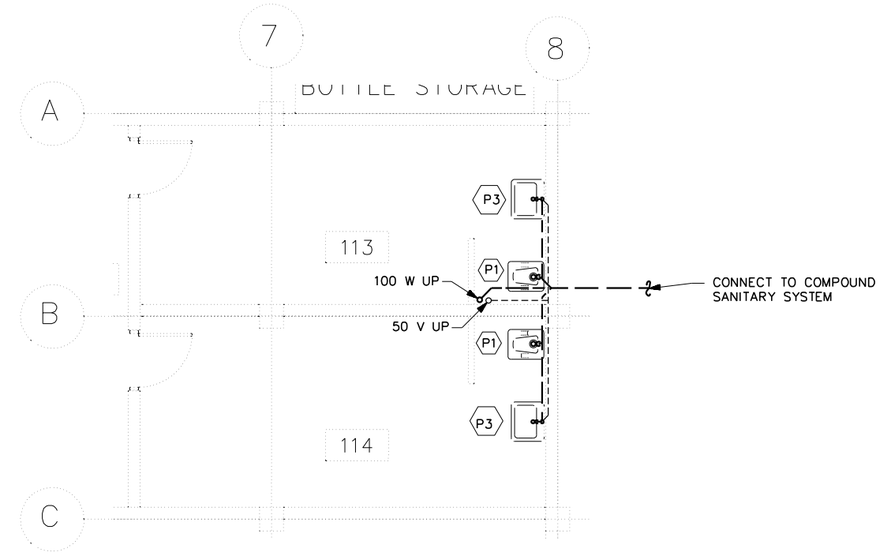

ENLARGED FIRST FLOOR TOILET PLAN "D"- WASTE AND VENT
SCALE 1: 50

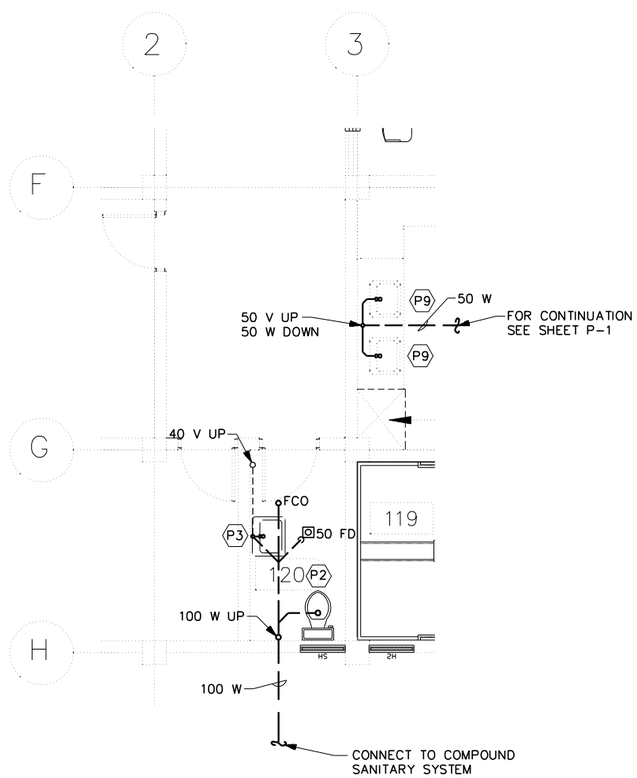

ENLARGED FIRST FLOOR TOILET PLAN "B"- WASTE AND VENT
SCALE 1: 50

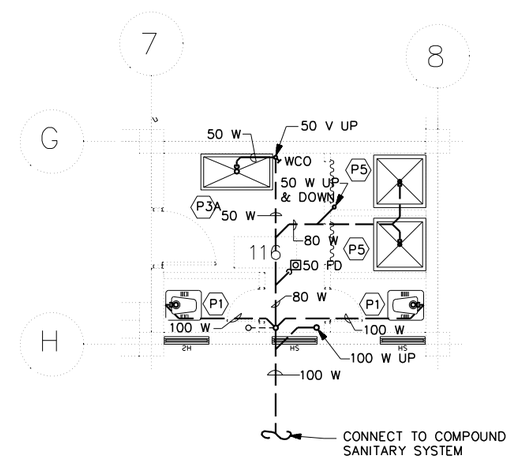

ENLARGED FIRST FLOOR TOILET PLAN "C"- WASTE AND VENT
SCALE 1: 50

1:50

UNLESS OTHERWISE NOTED, LINEAR DIMENSIONS SHOWN ARE IN MILLIMETERS.

SYMBOL	DESCRIPTION	DATE	APP

DESIGNED BY: RMS
DATE: 02-05-07
DWN BY: RMS
SUBMITTED BY: SYED EMAYATULLA, CHIEF, PDU BLDG SYSTEMS
CHK BY: SE
FILE NO.: AF0701 A-MP05LS

US Army Corps of Engineers
Transatlantic Programs Center

AFGHAN NATIONAL POLICE HEADQUARTERS (2 STORY) COMPOUND
AFGHANISTAN

POLICE HEADQUARTERS
FIRST FLOOR ENLARGED TOILET PLANS- WASTE AND VENT

SHEET REFERENCE NUMBER:
A
P-5

3/9/2007
h:\projects\afghanistan\af0701\af0701\mec\AF0701A-MP05LS.DWG

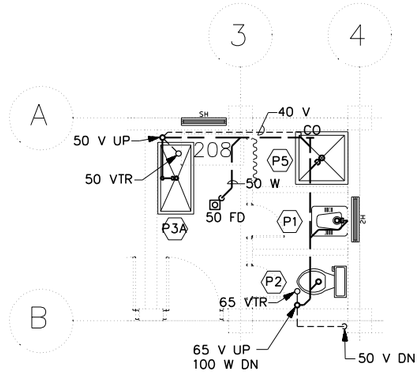

ENLARGED SECOND FLOOR TOILET PLAN "E"- WASTE AND VENT
SCALE- 1: 50

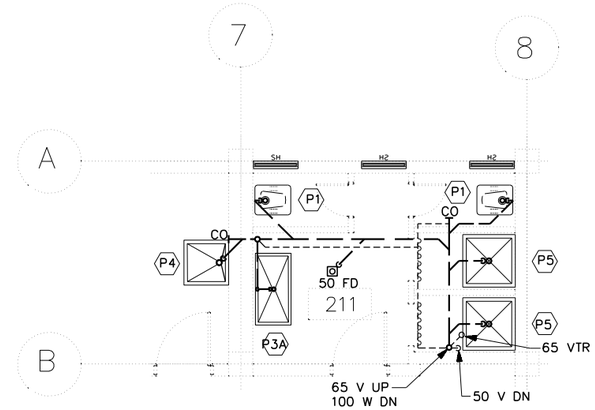

ENLARGED SECOND FLOOR TOILET PLAN "H"- WASTE AND VENT
SCALE- 1: 50

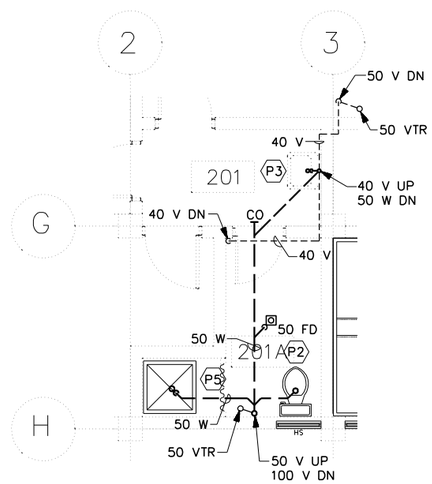

ENLARGED SECOND FLOOR TOILET PLAN "F"- WASTE AND VENT
SCALE- 1: 50

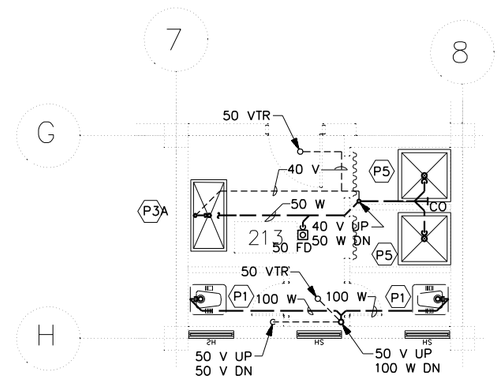

ENLARGED SECOND FLOOR TOILET PLAN "G"- WASTE AND VENT
SCALE- 1: 50

1 0 1 2 3 4
1:50

UNLESS OTHERWISE NOTED, LINEAR DIMENSIONS SHOWN ARE IN MILLIMETERS.

SYMBOL	DESCRIPTION	DATE	APP

DESIGNED BY: RMS
DATE: 02-05-07
DWN BY: RMS
SUBMITTED BY: SYED EMAYATULLA CHIEF, PDU BLDG SYSTEMS
CHK BY: SE
FILE NO.: AF0701 A-MP06LS

US Army Corps of Engineers
Transatlantic Programs Center

AFGHAN NATIONAL POLICE HEADQUARTERS (2 STORY) COMPOUND
AFGHANISTAN
POLICE HEADQUARTERS
SECOND FLOOR ENLARGED TOILET PLANS- WASTE AND VENT

SHEET REFERENCE NUMBER:
A
P-6

3/9/2007
h:\projects\afghanistan\af0701\af0701a\mec\AF0701A-MP06LS.DWG

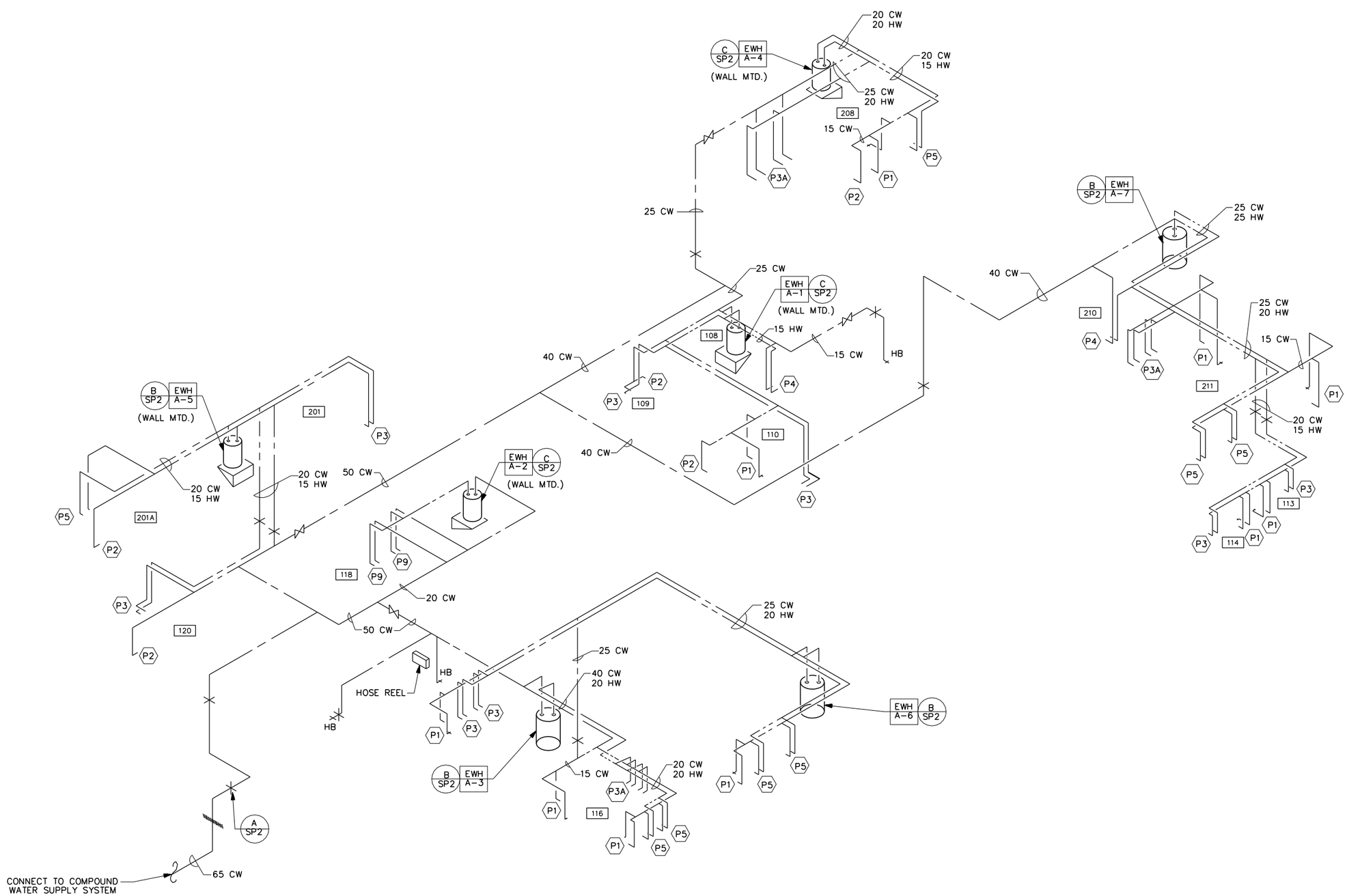

WATER SUPPLY RISER DIAGRAM
NOT TO SCALE

SYMBOL	DESCRIPTION	DATE	APP.

DESIGNED BY: RMS
DATE: 02-05-07
DWN. BY: RMS
SUBMITTED BY: SYED EMAYATULLA, CHIEF, PDU BLDG SYSTEMS
CHK BY: SE
FILE NO.: AF0701 A-MP07DI

US Army Corps of Engineers
Transatlantic Programs Center

AFGHAN NATIONAL POLICE HEADQUARTERS (2 STORY) COMPOUND
AFGHANISTAN
POLICE HEADQUARTERS
WATER SUPPLY RISER DIAGRAM

SHEET REFERENCE NUMBER:
A
P-7

3/9/2007
h:\projects\afghanistan\af0701\af0701\mec\AF0701A-MP07DI.DWG

EWH A-X ELECTRIC WATER HEATER SCHEDULE

UNIT NUMBER	LOCATION (ROOM NO.)	STORAGE CAPACITY (LITERS)	MINIMUM RECOVERY RATE (LITERS/HOUR) @ 55.5 C RISE	NUMBER OF ELEMENTS	ELECTRICAL REQUIREMENTS				REMARKS
					KW INPUT	VOLTS	PH	HZ	
A-1	UTILITY	114	39	1	2.5	220	1	50	WALL MOUNTED
A-2	KITCHEN	114	89	2	6.0	380	3	50	WALL MOUNTED
A-3	DINING ROOM	300	186	3	12.0	380	3	50	FLOOR MOUNTED
A-4	STAIRWELL (UPSTAIRS)	114	39	1	4.0	380	3	50	WALL MOUNTED
A-5	TOILET	72	31	1	2.0	220	1	50	WALL MOUNTED
A-6	BARRACKS	300	186	3	12.0	380	3	50	FLOOR MOUNTED
A-7	UTILITY	450	186	3	12.0	380	3	50	FLOOR MOUNTED

SYMBOL	DESCRIPTION	DATE	APP

DESIGNED BY: RMS
DATE: 02-05-07
DWN BY: RMS
SUBMITTED BY: SYED ENAYATULLA CHIEF, PDT BLDG SYSTEMS
CHK BY: SE
FILE NO.: AF0701 A-MP8SC

US Army Corps of Engineers
Transatlantic Programs Center

AFGHAN NATIONAL POLICE HEADQUARTERS (2 STORY) COMPOUND
AFGHANISTAN
POLICE HEADQUARTERS
PLUMBING SCHEDULES

SHEET REFERENCE NUMBER:
A
P-8

3/9/2007
h:\projects\afghanistan\af0701\af0701\mec\AF0701A-MP8SC.DWG

NOTES:

1. FOR LEGEND AND ABBREVIATIONS SEE DRAWING SE-1.

2. EXIT LIGHTS AND EMERGENCY LIGHTS SHALL BE CONNECTED AHEAD OF LIGHT SWITCH.

3. FOR LIGHT FIXTURE SCHEDULE SEE DRAWING SE-1.

4. COORDINATE LOCATION OF ALL ELECTRICAL FIXTURES AND EQUIPMENT WITH ALL OTHER TRADES.

5. FOR ONE LINE DIAGRAM SEE DRAWING XE- I, POWER PLANT.

6. ALL LIGHT FIXTURES IN JAIL CELLS SHALL BE TWO LAMP FLUORESCENT TYPE FIXTURES SUITABLE FOR VANDAL RESISTANCE/ DETENTION CENTER. LIGHT FIXTURES SHALL WITHSTAND THE PHYSICAL ABUSE AND THE INTENT- TO- DESTROY TYPE ABUSE.

7. ALL WIRING SHALL BE SURFACE MOUNTED IN METAL CONDUIT.

8. COORDINATE LOCATION OF THE CEILING FANS WITH LIGHT FIXTURES.

9. CONNECT THE LIGHT SWITCH TO FIXTURE TYPE "D" ON SECOND FLOOR. SEE DRAWING E-2.

10. COORDINATE LOCATION AND MOUNTING HEIGHT OF THE LIGHT FIXTURE IN THIS ROOM WITH THE EXHAUST FAN AND THE DUCT TO PROVIDE REQUIRED CLEARANCE.

11. COORDINATE LOCATION OF THE LIGHT FIXTURES IN THIS ROOM WITH THE KITCHEN EXHAUST HOOD.

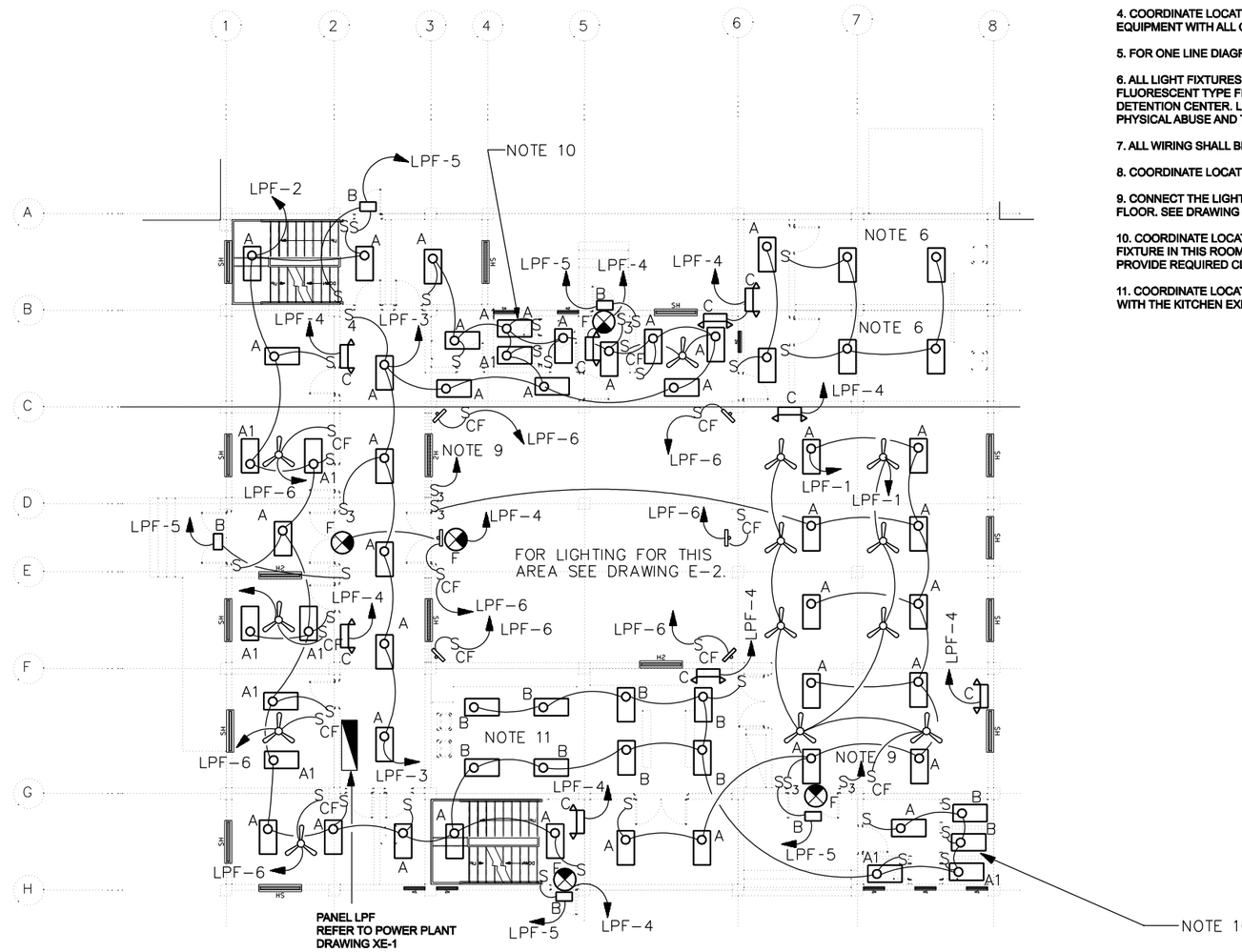

FIRST FLOOR LIGHTING PLAN
SCALE= 1:100

1 0 1 2 3 4 5 6 7 8 9
1:100

UNLESS OTHERWISE NOTED, LINEAR DIMENSIONS SHOWN ARE IN MILLIMETERS.

SYMBOL	DESCRIPTION	DATE	APP.

DESIGNED BY: MM
DATE: 02-05-07
DWN BY: MM
SUBMITTED BY: SYED EMAYATULLA CHIEF, PDU BLDG SYSTEMS
CHK BY: SE
FILE NO.: AF0701 A-ELOIPN

US Army Corps of Engineers
Transatlantic Programs Center

AFGHAN NATIONAL POLICE HEADQUARTERS (2 STORY) COMPOUND
AFGHANISTAN
POLICE HEADQUARTERS
FIRST FLOOR LIGHTING PLAN

SHEET REFERENCE NUMBER:
A
E-1

3/9/2007
h:\projects\afghanistan\af0701\af0701\ele\AF0701A-ELOIPN.DWG

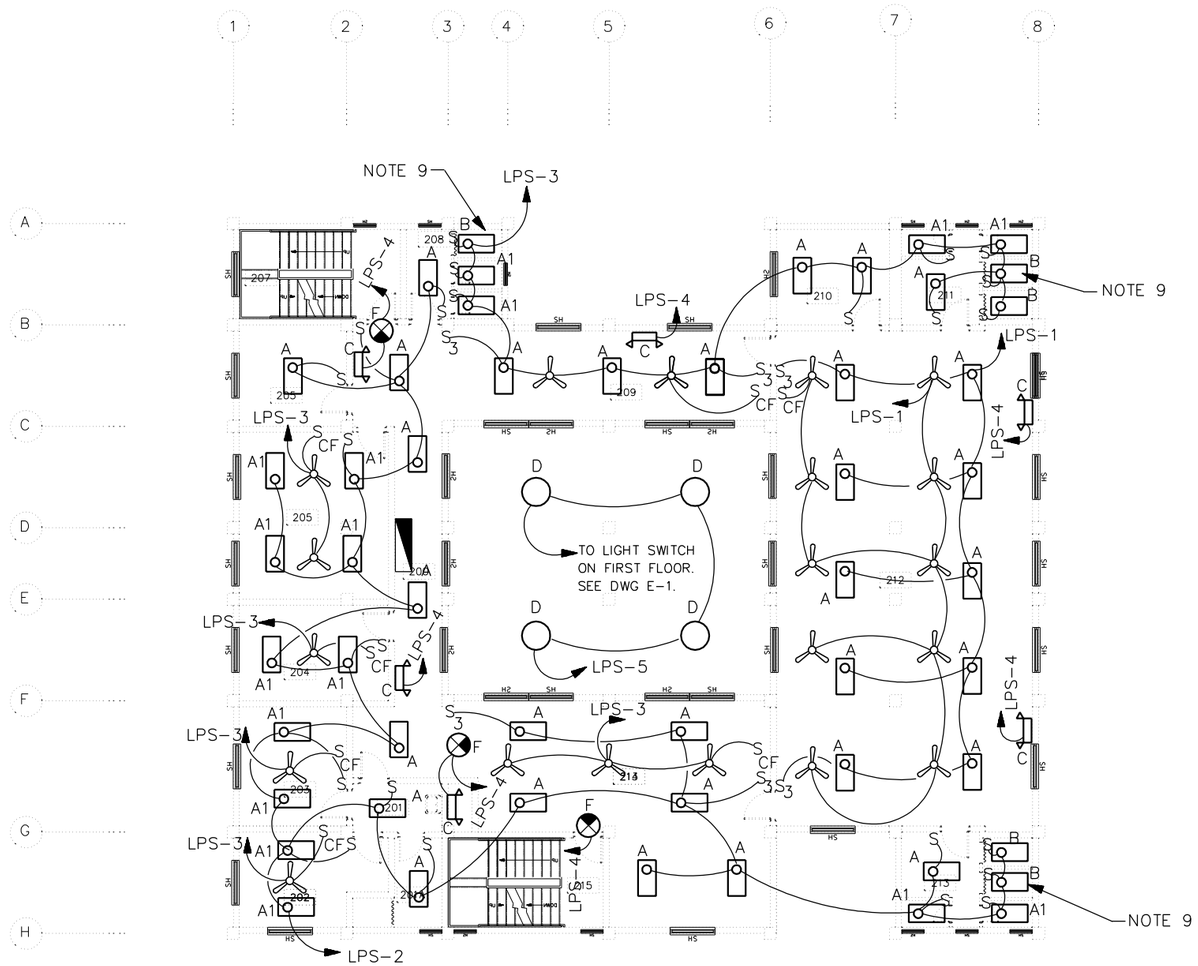

SECOND FLOOR LIGHTING PLAN
SCALE= 1:100

NOTES:

1. FOR LEGEND AND ABBREVIATIONS SEE DRAWING SE-1.
2. EXIT LIGHTS AND EMERGENCY LIGHTS SHALL BE CONNECTED AHEAD OF LIGHT SWITCH.
3. FOR LIGHT FIXTURE SCHEDULE SEE DRAWING SE-1.
4. COORDINATE LOCATION OF ALL ELECTRICAL FIXTURES AND EQUIPMENT WITH ALL OTHER TRADES.
5. FOR ONE LINE DIAGRAM SEE DRAWING XE- I, POWER PLANT.
6. ALL LIGHT FIXTURES IN JAIL CELLS SHALL BE TWO LAMP FLUORESCENT TYPE FIXTURES SUITABLE FOR VANDAL RESISTANCE/ DETENTION CENTER. LIGHT FIXTURES SHALL WITHSTAND THE PHYSICAL ABUSE AND THE INTENT- TO- DESTROY TYPE ABUSE.
7. ALL WIRING SHALL BE SURFACE MOUNTED IN METAL CONDUIT.
8. COORDINATE LOCATION OF THE CEILING FANS WITH LIGHT FIXTURES.
9. COORDINATE LOCATION AND MOUNTING HEIGHT OF THE LIGHT FIXTURE IN THIS ROOM WITH EXHAUST FAN AND THE DUCT TO PROVIDE REQUIRED CLEARANCE.

1 0 1 2 3 4 5 6 7 8 9
1:100

UNLESS OTHERWISE NOTED, LINEAR DIMENSIONS SHOWN ARE IN MILLIMETERS.

SYMBOL	DESCRIPTION	DATE	APP

DESIGNED BY: MM
DATE: 02-05-07
DWN BY: MM
SUBMITTED BY: SYED EMAYATULLA, CHIEF, PDT BLDG SYSTEMS
CHK BY: SE
FILE NO.: AF0701 A-EL02PN

US Army Corps of Engineers
Transatlantic Programs Center

AFGHAN NATIONAL POLICE HEADQUARTERS (2 STORY) COMPOUND
AFGHANISTAN
POLICE HEADQUARTERS
SECOND FLOOR LIGHTING PLAN

SHEET REFERENCE NUMBER:
A
E-2

3/9/2007
h:\projects\afghanistan\af0701\af0701b\ele\AF0701A-EL02PN.DWG

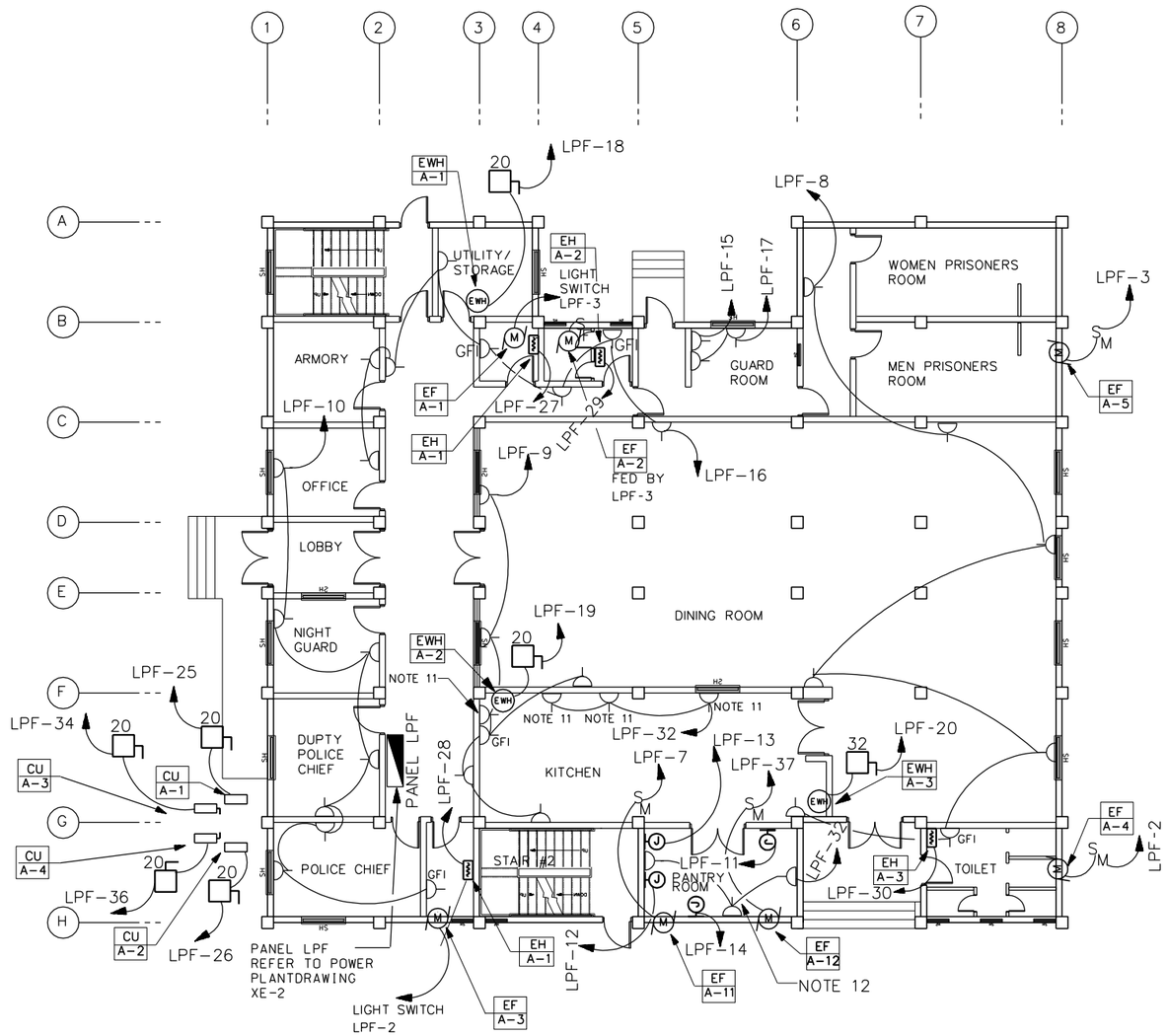

FIRST FLOOR POWER PLAN
SCALE- 1:100

NOTES:

1. FOR LEGEND AND ABBREVIATIONS SEE DRAWING SE-1.

2.COORDINATE LOCATION OF ALL ELECTRICAL FIXTURES AND EQUIPMENT WITH ALL OTHER TRADES.

3. FOR ONE LINE DIAGRAM SEE DRAWING XE- 2, POWER PLANT.

4. ALL WIRING SHALL BE SURFACE MOUNTED IN METAL CONDUIT.

5. FOR EXACT LOCATION OF MECHANICAL EQUIPMENT SEE MECHANICAL DRAWINGS.

6. EXHAUST FANS A-4,,A-6,A-8, AND A-9 SHALL BE CONTROLLED BY MANUAL MOTOR STARTER LOCATED BESIDE EACH EXHAUST FAN 2.4 METER ABOVE FINISHED FLOOR. EXHAUST FAN A-5 SHALL BE CONTROLLED BY A MANUAL MOTOR STARTER SWITCH LOCATED IN THE HALLWAY 112. EXACT LOCATION SHALL BE COORDINATED WITH THE CONTRACTING OFFICER.

7. EXHAUST FANS A-1,A-3, AND A-7 SHALL BE CONTROLLED BY LIGHT SWITCH IN ITS RESPECTIVE ROOM.

8. EXHAUST FAN A-2, AND A-10 SHALL BE CONTROLLED BY LOCAL FAN SWITCH AS SHOWN ON THE DRAWINGS.

9. EXHAUST FAN A-11 AND A-12 SHALL BE CONTROLLED BY A MANUAL MOTOR STARTER .SWITCH LOCATIONS SHALL BE AS SHOWN ON THE DRAWINGS.

10. ALL EXTERIOR DISCONNECT SWITCHES SHALL HAVE NEMA 4 STAINLESS STEEL ENCLOSURE.

11. RECEPTACLES IN THIS AREA TO BE MOUNTED ABOVE THE COUNTER.

12. COORDINATE EXACT LOCATION OF THE JUNCTION BOXES WITH THE CONTRACTING OFFICER.

SYMBOL	DESCRIPTION	DATE	APP

DESIGNED BY: MM
DATE: 02-05-07
DWN BY: MM
SUBMITTED BY: SYED EMAYATULLA CHIEF, PDU BLDG SYSTEMS
CHK BY: SE
FILE NO.: AF0701 A-EP03PN

US Army Corps of Engineers
Transatlantic Programs Center

AFGHAN NATIONAL POLICE HEADQUARTERS (2 STORY) COMPOUND
AFGHANISTAN
POLICE HEADQUARTERS
FIRST FLOOR POWER PLAN

SHEET REFERENCE NUMBER:
A
E-3

1 0 1 2 3 4 5 6 7 8 9
1:100

UNLESS OTHERWISE NOTED, LINEAR DIMENSIONS SHOWN ARE IN MILLIMETERS.

3/9/2007
h:\projects\afghanistan\af0701\af0701\xele\AF0701A-EP03PN.DWG

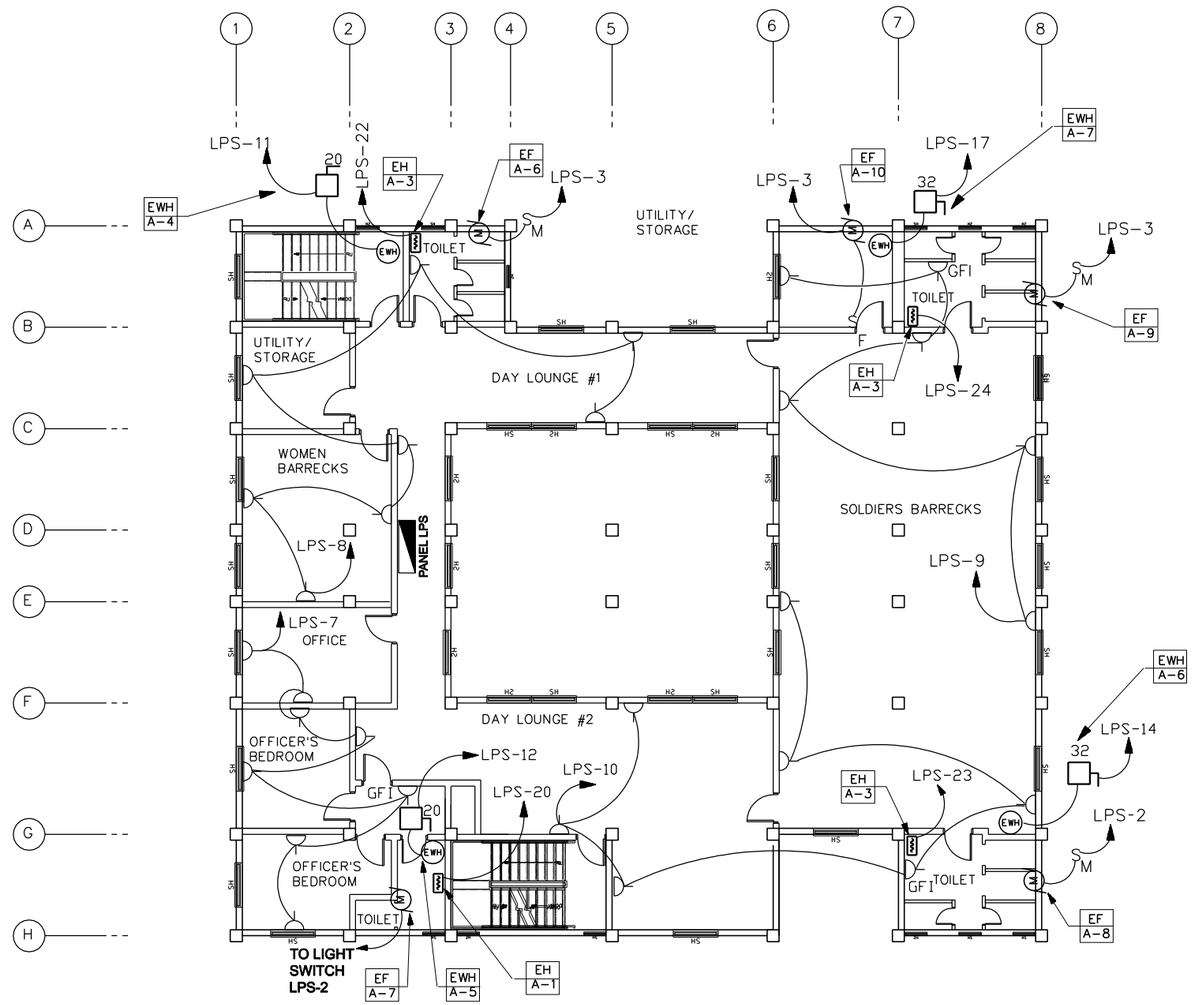

SECOND FLOOR POWER PLAN

SCALE- 1:100

NOTES:

1. FOR LEGEND AND ABBREVIATIONS SEE DRAWING SE-1.

2.COORDINATE LOCATION OF ALL ELECTRICAL FIXTURES AND EQUIPMENT WITH ALL OTHER TRADES.

3. FOR ONE LINE DIAGRAM SEE DRAWING XE- 2, POWER PLANT.

4. ALL WIRING SHALL BE SURFACE MOUNTED IN METAL CONDUIT.

5. FOR EXACT LOCATION OF MECHANICAL EQUIPMENT SEE MECHANICAL DRAWINGS.

6. EXHAUST FANS A-4,A-5,A-6,A-8, AND A-9 SHALL BE CONTROLLED BY MANUAL MOTOR STARTER LOCATED BESIDE EACH EXHAUST FAN 2.4 METER ABOVE FINISHED FLOOR.

7. EXHAUST FANS A-1,A-3, AND A-7 SHALL BE CONTROLLED BY LIGHT SWITCH IN ITS RESPECTIVE ROOM.

8. EXHAUST FAN A-2, A-10, A-11 AND A-12 SHALL BE CONTROLLED BY LOCAL FAN SWITCH.

9. ALL EXTERIOR DISCONNECT SWITCHES SHALL HAVE NEMA 4 STAINLESS STEEL ENCLOSURE.

SYMBOL	DESCRIPTION	DATE	APP

DESIGNED BY: MM
DATE: 02-05-07
DWN. BY: MM
SUBMITTED BY: SYED EMAYATULLA CHIEF, PDU BLDG SYSTEMS
CHK BY: SE
FILE NO.: AF0701 A-EP04PN

US Army Corps of Engineers
Transatlantic Programs Center

AFGHAN NATIONAL POLICE HEADQUARTERS (2 STORY) COMPOUND
AFGHANISTAN
POLICE HEADQUARTERS
SECOND FLOOR POWER PLAN

SHEET REFERENCE NUMBER:
A
E-4

1 0 1 2 3 4 5 6 7 8 9
1:100

UNLESS OTHERWISE NOTED, LINEAR DIMENSIONS SHOWN ARE IN MILLIMETERS.

3/9/2007
h:\projects\afghanistan\af0701\af0701\ele\AF0701A-EP04PN.DWG

NOTES:

1. FOR LEGEND AND ABBREVIATIONS SEE DRAWING SE-1.

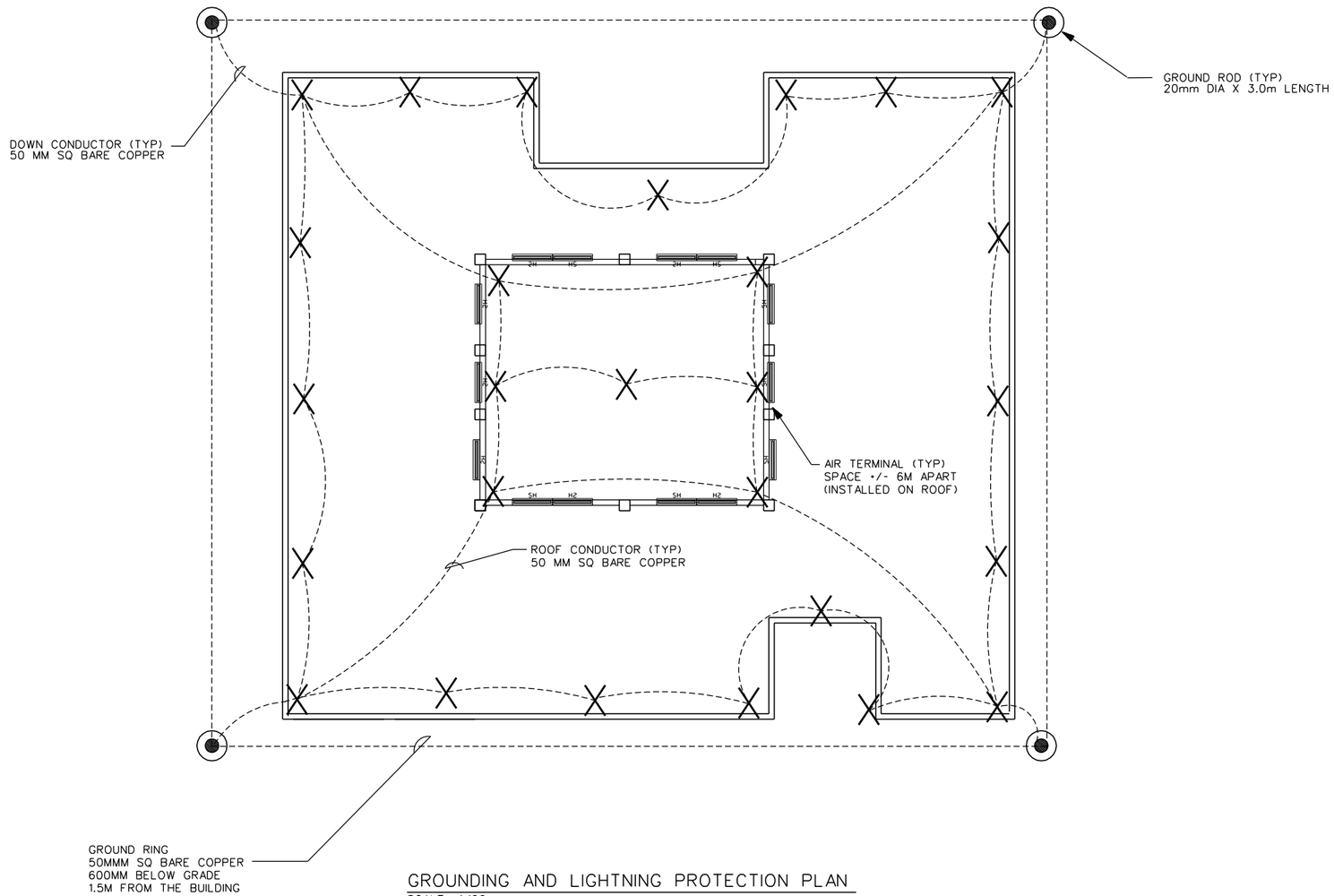

GROUNDING AND LIGHTNING PROTECTION PLAN

SCALE- 1:100

1 0 1 2 3 4 5 6 7 8 9
1:100

UNLESS OTHERWISE NOTED, LINEAR DIMENSIONS SHOWN ARE IN MILLIMETERS.

SYMBOL	DESCRIPTION	DATE	APP

DESIGNED BY: MM
DATE: 02-05-07
DWN BY: MM
SUBMITTED BY: SYED EMAYATULLA CHIEF, PDU BLDG SYSTEMS
CHK BY: SE
FILE NO.: AF0701 A-EP05PN

US Army Corps of Engineers
Transatlantic Programs Center

AFGHAN NATIONAL POLICE HEADQUARTERS (2 STORY) COMPOUND
AFGHANISTAN

POLICE HEADQUARTERS
GROUNDING AND LIGHTNING PROTECTION PLAN

SHEET REFERENCE NUMBER:
A
E-5

3/9/2007
h:\projects\afghanistan\af0701\af0701b\ele\AF0701A-EP05PN.DWG

PANELBOARD LPF FLUSH MOUNTED MINIMUM 22,000 ASYM. A.I.C. MIN.

_____ AMP. MAIN LUGS (OR) 225 AMP. MAIN BREAKER W/ 225 AMP. TRIP

CIRCUIT BREAKER TYPE 380/220 VOLTS 3 PHASE 4 WIRE 250 AMP. BUS 50 HZ

CKT. NO.	TRIP AMPS	NO. POLES	WIRE MM2	GND MM2	CONDUIT MM	LOAD SERVED	LOAD-V.A. A0	LOAD-V.A. B0	LOAD-V.A. C0	LOAD-V.A. A0	LOAD-V.A. B0	LOAD-V.A. C0	LOAD SERVED	CONDUIT MM	GND MM2	WIRE MM2	NO. POLES	TRIP AMPS	CKT. NO.
1	20	1	4	4	20	LIGHTING & CEILING FAN	3400			3360			LIGHTING & EXHAUST FAN	20	4	4	1	20	2
3	20	1	4	4	20	LGHT.EF.CEILING FAN		3440			650		EXIT AND EMERGENCY LIGHTING	20	4	4	1	20	4
5	20	1	4	4	20	EXTERIOR LIGHTING			500			2000	CEILING FANS	20	4	4	1	20	6
7	20	1	4	4	20	EF-A-11	750			1260			RECEPTACLES	20	4	4	1	20	8
9	20	1	4	4	20	RECEPTACLES		1260			1440		RECEPTACLES	20	4	4	1	20	10
11	20	1	4	4	20	JB FOR REFRIGERATOR/FREEZER			2000			2000	JB FOR REFRIGERATOR/FREEZER	20	4	4	1	20	12
13	20	1	4	4	20	JB FOR REFRIGERATOR/FREEZER	2000			2000			JB FOR REFRIGERATOR/FREEZER	20	4	4	1	20	14
15	20	1	4	4	20	RECEPTACLES CCTV CONSOLE		720			1440		RECEPTACLES	20	4	4	1	20	16
17	20	1	4	4	20	RECEPTACLES.GUARD RM			180			2500	ELECTRIC WATER HEATER A-1	20	4	4	1	20	18
19	20	3	4	4	20	ELECTRIC WATER HEATER-2	2000			4000			ELECTRIC WATER HEATER A-3	25	4	6	3	30	20
21								2000			4000								22
23									2000			4000							24
25	20	1	4	4	20	CU-A-1	750			900			CU-A-2	20	4	4	1	20	26
27	20	1	4	4	20	EH-A-1		750			750		EH-A-1	20	4	4	1	20	28
29	20	1	4	4	20	EH-A-2			1500			3000	EH-A-3	20	4	4	1	20	30
31	150	3	70	50	100	PANEL LPS SECOND FLOOR	21403			540			RECEPTACLES	20	4	4	1	20	32
33								21403			750		CU-A-3	20	4	4	1	20	34
35									21403			900	CU-A-4	20	4	4	1	20	36
37	20	1	4	4	20	EF-A-12	250						SPARE				1	20	38
39	20	1				SPARE							SPARE				1	20	40
41	20	1				SPARE							SPARE				1	20	42
							30553	32326	27583	12060	9030	14400							

TOTAL CONN. LOAD 125.94 KVA. 60 % DEMAND = ESTIMATED DEMAND LOAD: 75.56 kVA

TOTAL CONN. LOAD PER PHASE (KVA): A0 42.61 B0 41.35 C0 41.98

SUPPLIED FROM POWER PLANT SWITCHBOARD(PPSB)

NOTES:

1. FOR LEGEND AND ABBREVIATIONS SEE DRAWING SE-6.
2. CONTRACTOR SHALL CONFIRM THAT ALL CIRCUIT RATINGS ARE BASED ON THE ACTUAL NAMEPLATE OF THE SUPPLIED EQUIPMENT.
3. CABLING FOR CCTV SYSTEM SHALL BE PER MANUFACTURER'S RECOMMENDATION.

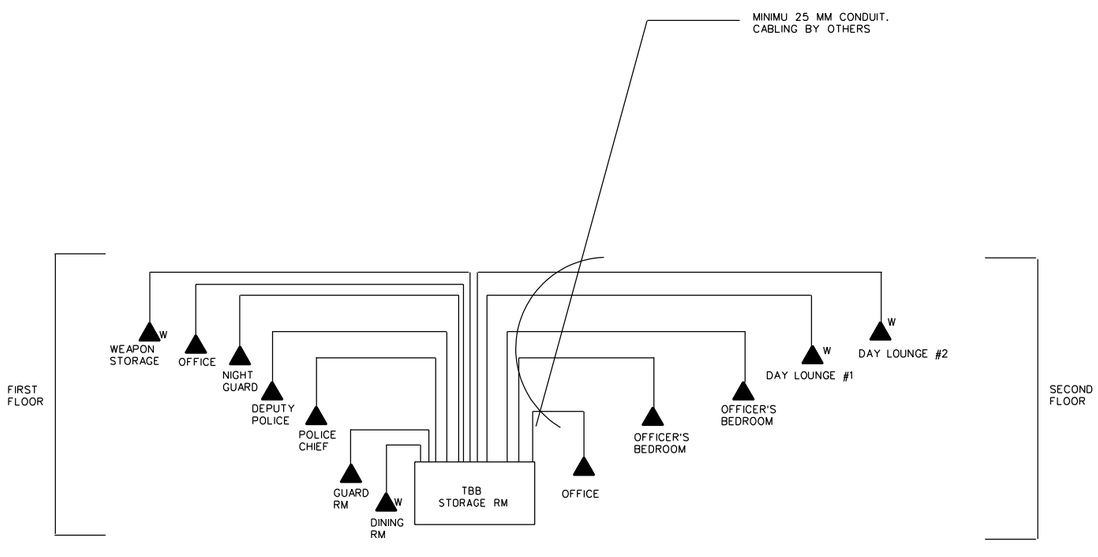

TELEPHONE RISER DIAGRAM

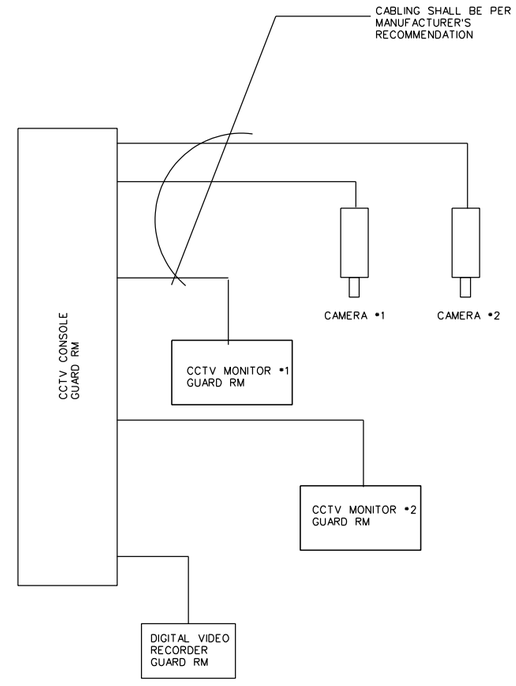

CCTV RISER DIAGRAM

UNLESS OTHERWISE NOTED, LINEAR DIMENSIONS SHOWN ARE IN MILLIMETERS.

SYMBOL	DESCRIPTION	DATE	APP

DESIGNED BY: MM DATE: 02-05-07
DWN BY: MM SUBMITTED BY: SYED EMAYATULLA CHIEF, PDD BLDG SYSTEMS
CHK BY: SE FILE NO.: AF0701 A-EP06SC

US Army Corps of Engineers Transatlantic Programs Center

AFGHAN NATIONAL POLICE HEADQUARTERS (2 STORY) COMPOUND AFGHANISTAN
POLICE HEADQUARTERS
PANEL SCHEDULES

SHEET REFERENCE NUMBER: A E-6

3/9/2007
h:\projects\afghanistan\af0701\af0701b\ele\AF0701A-EP06SC.DWG

PANELBOARD LPS FLUSH MOUNTED MINIMUM 22,000 ASYM. A.I.C. MIN.

_____ AMP. MAIN LUGS (OR) 150 AMP. MAIN BREAKER W/ 100 AMP. TRIP

CIRCUIT BREAKER TYPE 380/220 VOLTS 3 PHASE 4 WIRE 150 AMP. BUS 50 HZ

CKT. NO.	TRIP AMPS	NO. POLES	WIRE MM2	GND MM2	CONDUIT MM	LOAD SERVED	LOAD-V.A. A0	LOAD-V.A. B0	LOAD-V.A. C0	LOAD-V.A. A0	LOAD-V.A. B0	LOAD-V.A. C0	LOAD SERVED	CONDUIT MM	GND MM2	WIRE MM2	NO. POLES	TRIP AMPS	CKT. NO.
1	20	1	4	4	20	LIGHTING & CEILING FAN	3500			3510			LIGHTING. EXHAUST FAN &EF	20	4	4	1	20	2
3	20	1	4	4	20	LGHT.EF.CEILING FAN		3540			400		EXIT AND EMERGENCY LIGHTING	20	4	4	1	20	4
5	20	1	4	4	20	LIGHTING FIXTURE TYPE D			1200			3300	CEILING FANS	20	4	4	1	20	6
7	20	1	4	4	20	RECEPTACLES	1440			1440			RECEPTACLES	20	4	4	1	20	8
9	20	1	4	4	20	RECEPTACLES		1080			1260		RECEPTACLES	20	4	4	1	20	10
11	20	3	4	4	20	EWH-A-4			1333			2000	EWH-A-5	20	4	4	1	20	12
13							1333			4000			EWH-A-6	25	4	6	3	30	14
15								1333			4000								16
17	30	3	6	4	25	ELECTRIC WATER HEATER A-7			4000			4000							18
19							4000			2000			ELECTRIC HEAT A-1	20	4	4	1	20	20
21								4000			3000		ELECTRIC HEAT A-3	20	4	4	1	20	22
23	20	1	4	4	20	EWH-A-3			3000			3000	ELECTRIC HEAT A-3	20	4	4	1	20	24
25	20	1				SPARE							SPARE				1	20	26
27	20	1				SPARE							SPARE				1	20	28
29	20	1				SPARE							SPARE				1	20	30
31						SPACE							SPACE						32
33						SPACE							SPACE						34
35						SPACE							SPACE						36
37						SPACE							SPACE						38
39						SPACE							SPACE						40
41						SPACE							SPACE						42
							10273	9953	9533	12222	9932	12300							

TOTAL CONN. LOAD 64.21 KVA. 60 % DEMAND = ESTIMATED DEMAND LOAD: 38.52 kVA

TOTAL CONN. LOAD PER PHASE (KVA): A0 22.50 B0 19.88 C0 21.83

SUPPLIED FROM PANEL LPF ON FIRST FLOOR

NOTES:

1. FOR LEGEND AND ABBREVIATIONS SEE DRAWING E-6.
2. CONTRACTOR SHALL CONFIRM THAT ALL CIRCUIT RATINGS ARE BASED ON THE ACTUAL NAMEPLATE OF THE SUPPLIED EQUIPMENT.
3. CABLING FOR CCTV SYSTEM SHALL BE PER MANUFACTURER'S RECOMMENDATION.

UNLESS OTHERWISE NOTED, LINEAR DIMENSIONS SHOWN ARE IN MILLIMETERS.

SYMBOL	DESCRIPTION	DATE	APP

DESIGNED BY: MM
DATE: 02-05-07
DWN. BY: MM
SUBMITTED BY: SYED EMAYATULLA CHIEF, PDT BLDG SYSTEMS
CHK BY: SE
FILE NO.: AF0701 A-EP07SC

US Army Corps of Engineers
Transatlantic Programs Center

AFGHAN NATIONAL POLICE HEADQUARTERS (2 STORY) COMPOUND
AFGHANISTAN
POLICE HEADQUARTERS
PANEL SCHEDULES

SHEET REFERENCE NUMBER:
A
E-7

3/9/2007
h:\projects\afghanistan\af0701\af0701\ele\AF0701A-EP07SC.DWG

NOTES:
1. FOR LEGEND AND ABBREVIATIONS SEE DRAWING SE-1.

2. COORDINATE LOCATION OF ALL COMMUNICATION FIXTURES AND EQUIPMENT WITH ALL OTHER TRADES.

3. ALL EMPTY CONDUITS SHALL BE PROVIDED WITH PULL WIRES.

4. FOR TELEPHONE RISER DIAGRAM AND CCTV RISER DIAGRAM SEE DRAWING E-7.

5. CCTV WIRING SHALL BE SURFACE MOUNTED IN METAL CONDUIT.

6. TELEPHONE RACEWAY SYSTEM SHALL BE METAL CONDUIT. WIRING SHALL BE BY OTHERS.

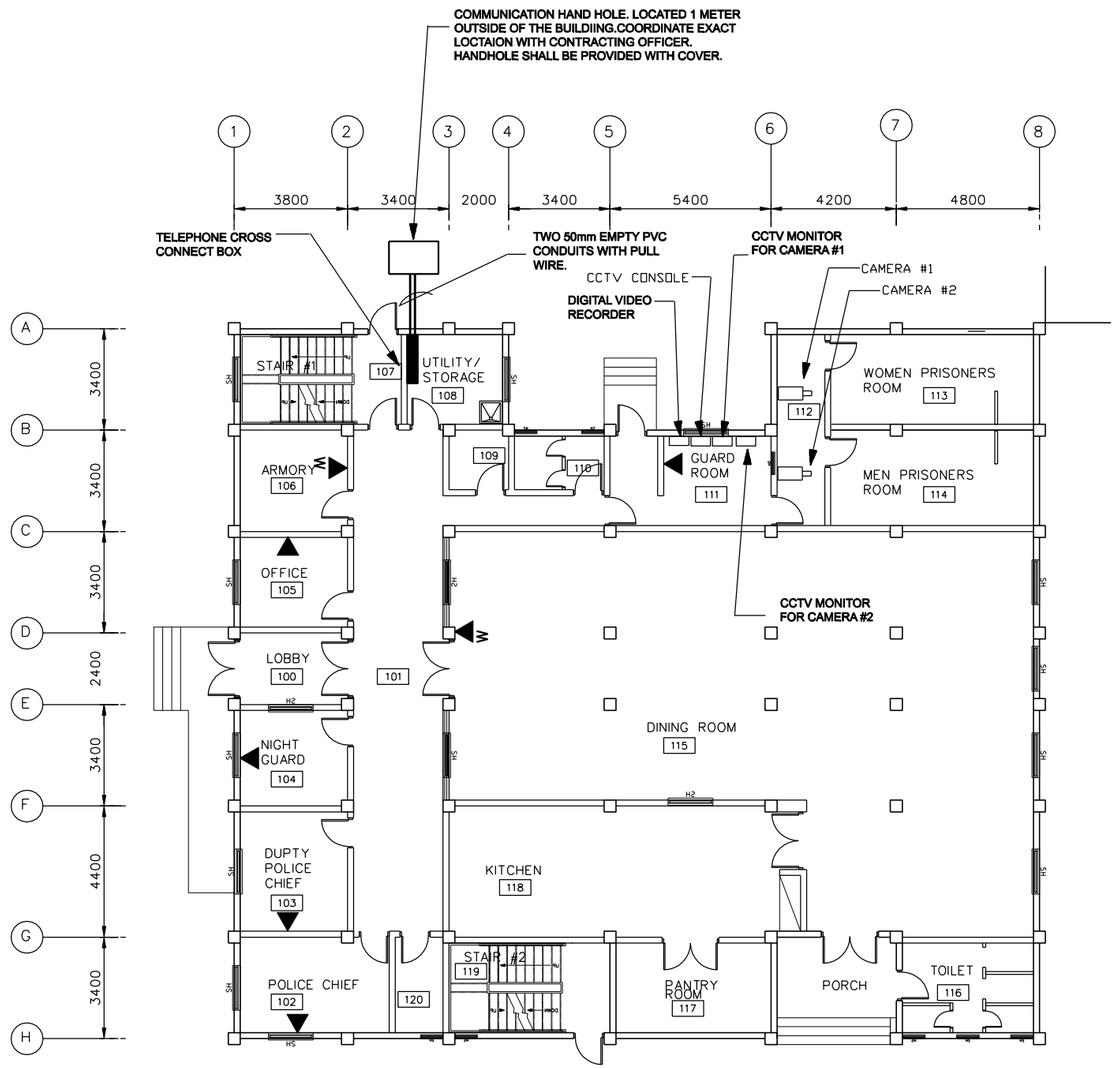

FIRST FLOOR COMMUNICATIONS PLAN
SCALE= 1:100

1 0 1 2 3 4 5 6 7 8 9
1:100

UNLESS OTHERWISE NOTED, LINEAR DIMENSIONS SHOWN ARE IN MILLIMETERS.

SYMBOL	DESCRIPTION	DATE	APP

DESIGNED BY: MM
DATE: 02-05-07
DWN BY: MM
SUBMITTED BY: SYED EMAYATULLA CHIEF, PDU BLDG SYSTEMS
CHK BY: SE
FILE NO.: AF0701 A-TCOIPN

US Army Corps of Engineers
Transatlantic Programs Center

AFGHAN NATIONAL POLICE HEADQUARTERS (2 STORY) COMPOUND
AFGHANISTAN
POLICE HEADQUARTERS
FIRST FLOOR COMMUNICATIONS PLAN

SHEET REFERENCE NUMBER:
A
TC-1

3/9/2007
h:\projects\afghanistan\af0701\af0701\ele\AF0701A-TCOIPNLDWG

NOTES:

1. FOR LEGEND AND ABBREVIATIONS SEE DRAWING SE-1.

2. COORDINATE LOCATION OF ALL COMMUNICATION FIXTURES AND EQUIPMENT WITH ALL OTHER TRADES.

3. ALL EMPTY CONDUITS SHALL BE PROVIDED WITH PULL WIRES.

4. FOR TELEPHONE RISER DIAGRAM AND CCTV RISER DIAGRAM SEE DRAWING E-6.

5.TELEPHONE RACEWAY SYSTEM SHALL BE METAL CONDUIT. WIRING SHALL BE BY OTHERS.

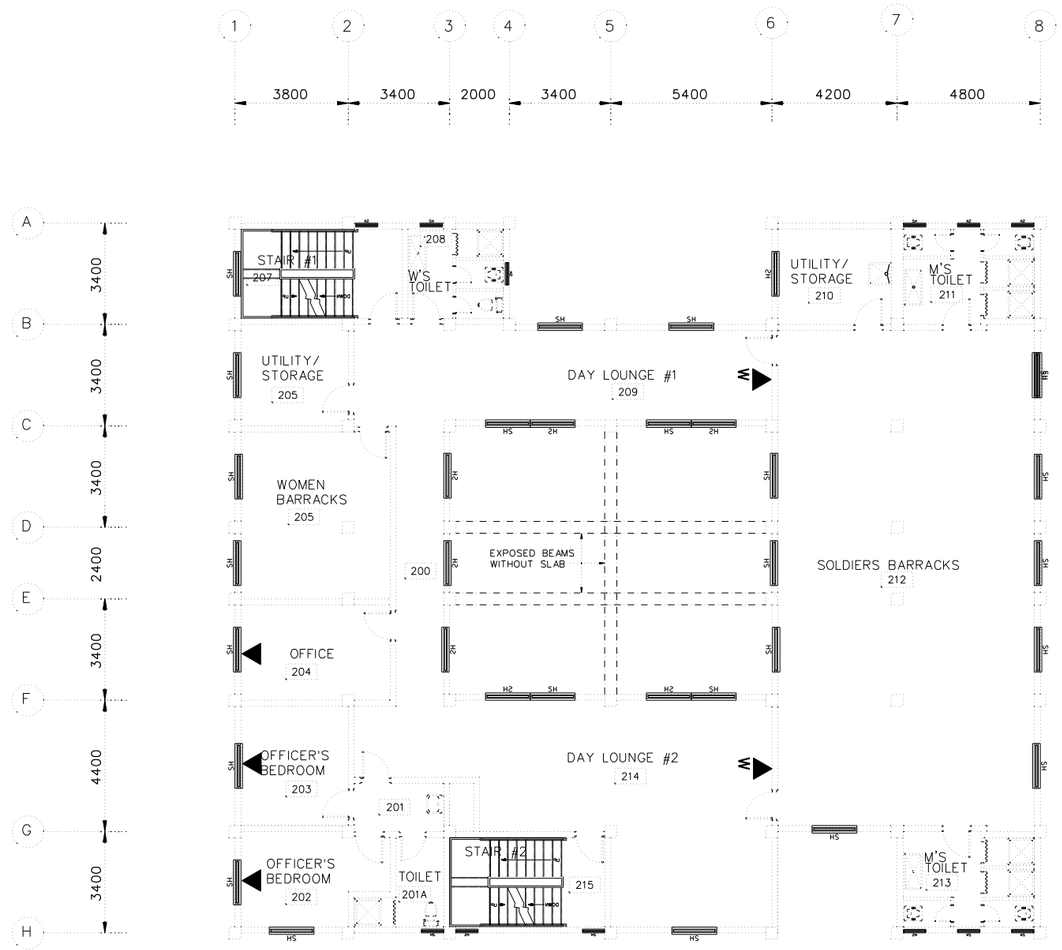

SECOND FLOOR COMMUNICATIONS PLAN
SCALE• 1:100

1 0 1 2 3 4 5 6 7 8 9
1:100

UNLESS OTHERWISE NOTED, LINEAR DIMENSIONS SHOWN ARE IN MILLIMETERS.

SYMBOL	DESCRIPTION	DATE	APP

DESIGNED BY: MM
DATE: 02-05-07
DWN BY: MM
SUBMITTED BY: SYED EMAYATULLA CHIEF, PDT BLDG SYSTEMS
CHK BY: SE
FILE NO.: AF0701 A-TC02PN

US Army Corps of Engineers
Transatlantic Programs Center

AFGHAN NATIONAL POLICE HEADQUARTERS (2 STORY) COMPOUND
AFGHANISTAN

POLICE HEADQUARTERS
SECOND FLOOR COMMUNICATIONS PLAN

SHEET REFERENCE NUMBER:
A
TC-2

3/9/2007
h:\projects\afghanistan\af0701\af0701\ele\AF0701A-TC02PN.DWG

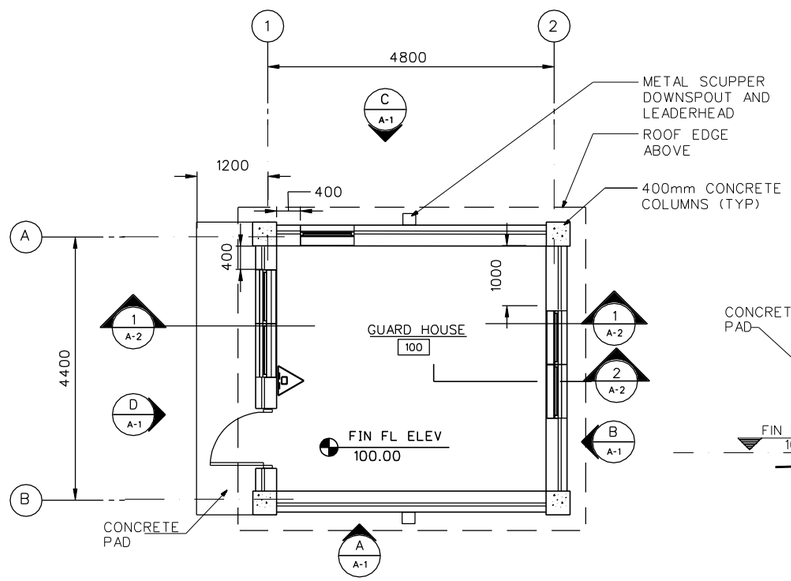

FLOOR PLAN
SCALE = 1:50

PROVIDE PORTABLE FIRE EXTINGUISHER, ABC

DRY CHEMICAL 4A:60B:C

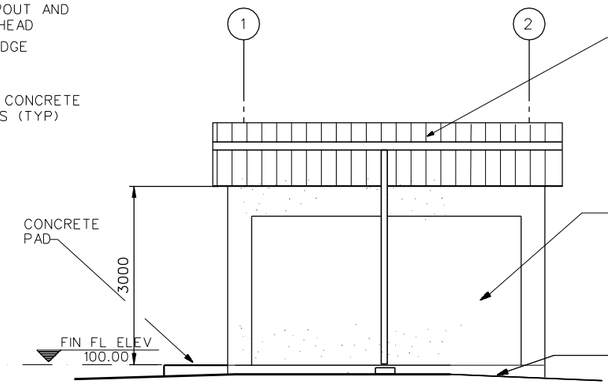

ELEVATION
SCALE = 1: 50

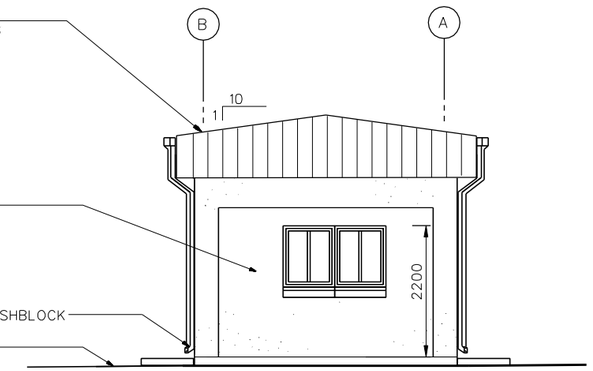

ELEVATION
SCALE = 1: 50

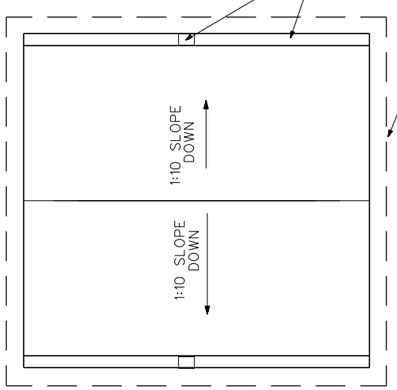

ROOF PLAN
SCALE = 1:50

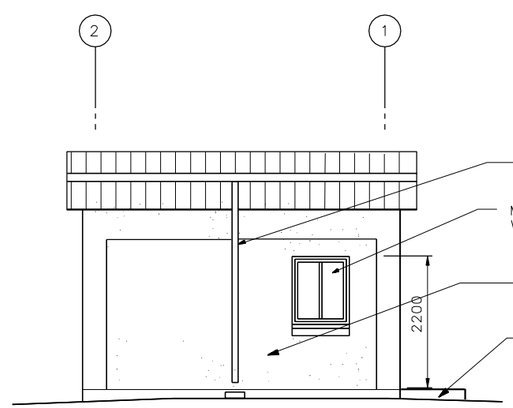

ELEVATION
SCALE = 1: 50

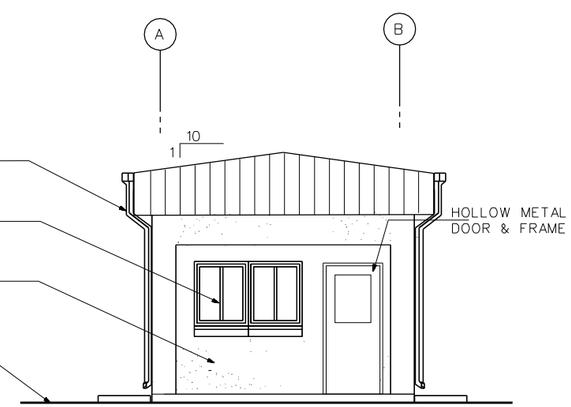

ELEVATION
SCALE = 1: 50

UNLESS OTHERWISE NOTED, LINEAR DIMENSIONS SHOWN ARE IN MILLIMETERS.

SYMBOL	DESCRIPTION	DATE	APP

DESIGNED BY: S. Hanna
DATE: 02-05-07
DWN. BY: S. Hanna
SUBMITTED BY: PHILIP L. DINELLO, CHIEF, POT FACILITIES DEV.
CHK BY: CHECK_BY
FILE NO.: AF0701 D-AR01pn

US Army Corps of Engineers
Transatlantic Programs Center

AFGHAN NATIONAL POLICE HEADQUARTERS (2 STORY) COMPOUND
AFGHANISTAN
GUARD HOUSE
BUILDING PLANS & ELEVATIONS

SHEET REFERENCE NUMBER:
D
A-1

3/9/2007
h:\projects\afghanistan\af0701\af0701\arc\af0701D-ar01pn.dwg

ROOM FINISH SCHEDULE

ROOM NO.	ROOM NAME	FLOOR		BASE		WALLS		CEILING			REMARKS
		MAT'L.	COLOR	MAT'L.	COLOR	MAT'L.	COLOR	MAT'L.	COLOR	HEIGHT	
101	GUARD HOUSE	F2	2	B2	11	W2	21	C2	31	--	

DOOR SCHEDULE

DOOR							FRAME				FIRE LABEL	HDW SET	REMARKS
NO.	LOCATION	TYPE	MAT'L	WIDTH	HEIGHT	THICK	HEAD	JAMB	SILL	MAT''L			
100	GUARD HOUSE	G	HM	900	2150	45	H-1/SA2	J-1/SA2	S-1/SA2	HM		1	

ROOM FINISH SCHEDULE LEGEND

FLOOR TYPE

F1 SEALED CONCRETE
F2 TERRAZZO TILE
F3 CERAMIC TILE
F4 QUARRY TILE

FLOOR COLOR

1 SEALED CONCRETE - NATURAL FINISH
2 TERRAZZO TILE - NAT'L TERRAZZO & MOSAIC ASSN, INC, NO. S-330
3 CERAMIC TILE - AMERICAN OLEAN, C-11, ALABASTER
4 QUARRY TILE - AMERICAN OLEAN, NO. Q03, SAHARA

BASE TYPE

B2 TERRAZZO
B3 CERAMIC
B4 QUARRY
B5 NO BASE

BASE COLOR

11 TERRAZZO TILE - NAT'L TERRAZZO & MOSAIC ASSN, INC, NO. S-330
12 CERAMIC TILE - AMERICAN OLEAN, D-12, ALMOND
13 QUARRY TILE -AMERICAN OLEAN, NO. Q03, SAHARA

WALL TYPE

W1 PAINTED CMU
W2 PAINTED PLASTER
W3 CERAMIC TILE

WALL COLOR

20 PAINTED CMU -HEMPEL, 1005-Y50R-25400, LIGHT BEIGE
21 PAINTED PLASTER-HEMPEL, 0502-Y-15420, OFF WHITE
22 METAL PANEL - HEMPEL, 0502-Y-15420, OFF WHITE
23 CERAMIC TILE -AMERICAN OLEAN, D-12, ALMOND

CEILING TYPE

C1 PAINTED EXPOSED STRUCTURE
C2 PAINTED PLASTER

CEILING COLOR

30 PAINTED EXPOSED STRUCTURE - HEMPEL, 0502-Y-15420, OFF WHITE
31 PAINTED SUSPENDED PLASTER HEMPEL, 0502-Y-15420, OFF WHITE

NOTE: PATTERN AND COLOR ARE SHOWN FOR REFERENCE ONLY, OTHER MANUFACTURER'S SIMILAR PATTERN AND COLOR MAY BE USED AS APPROVED BY THE CONTRACTING OFFICER.

ROOM FINISH SCHEDULE NOTES:

1. ALL WALL PENETRATIONS SHALL BE SEALED TO PROVIDE A NEAT APPEARANCE. PENETRATIONS OF EXTERIOR WALLS SHALL BE SEALED TO BE WATER-TIGHT.

2. SEALANTS SHALL MATCH THE COLOR OF ADJACENT SURFACES.

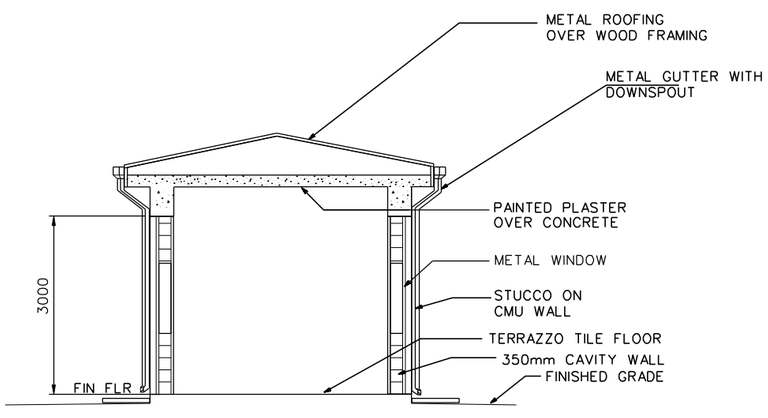

SECTION 1 (A-1 / A-2)
SCALE 1 : 50

UNLESS OTHERWISE NOTED, LINEAR DIMENSIONS SHOWN ARE IN MILLIMETERS.

SYMBOL	DESCRIPTION	DATE	APR

DESIGNED BY: S. Hanna
DATE: 02-05-07
DWN BY: S. Hanna
SUBMITTED BY: PHILIP L. DINELLO, CHIEF, POST FACILITIES DEV.
CHK BY: CHECK_BY
FILE NO.: AF0701 D-AR02SC

US Army Corps of Engineers
Transatlantic Programs Center

AFGHAN NATIONAL POLICE HEADQUARTERS (2 STORY) COMPOUND
AFGHANISTAN
GUARD HOUSE
ROOM/FINISH SCHEDULES

SHEET REFERENCE NUMBER:
D
A-2

3/9/2007
h:\projects\afghanistan\af0701\af0701\arc\af0701D-ar02sc.dwg

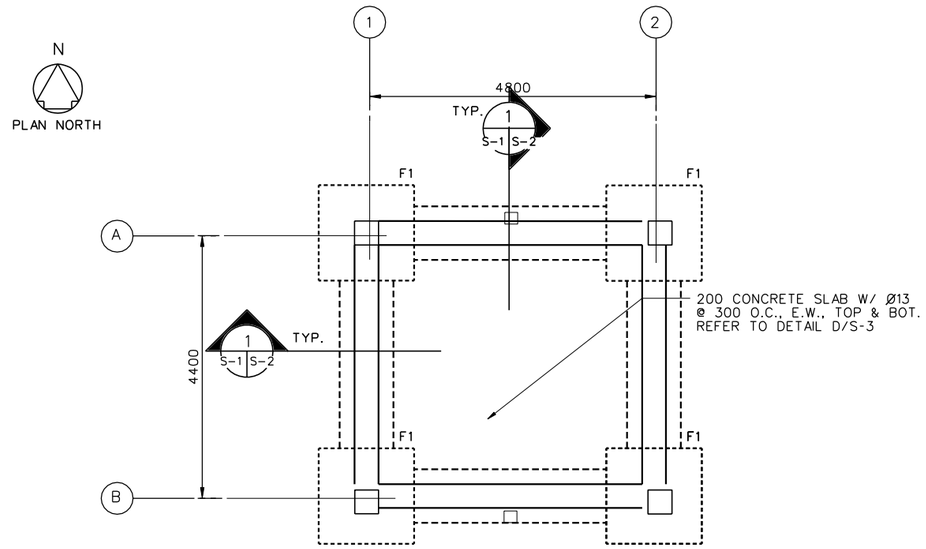

FOUNDATION AND SLAB PLAN
SCALE= 1:50

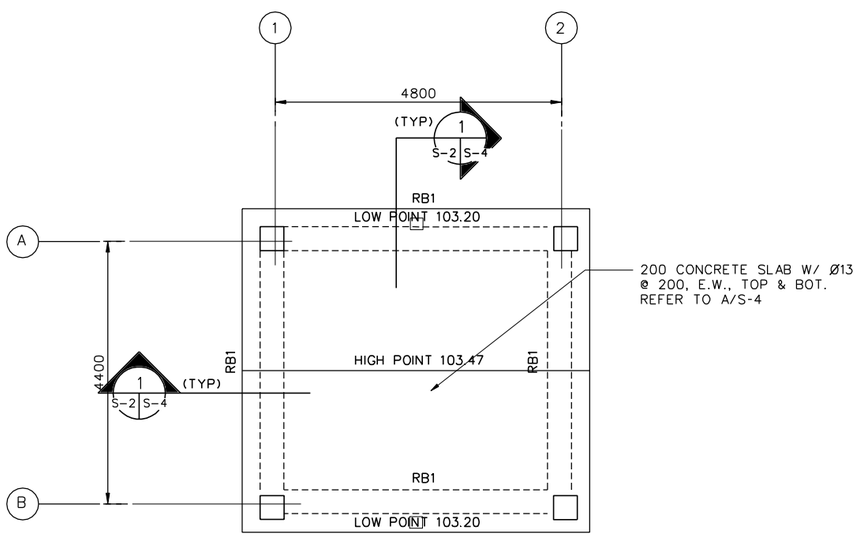

ROOF FRAMING PLAN
SCALE= 1:50

1. DESIGN LOADS (SERVICE)

LIVE LOADS:

ROOF: 1.0 KPA (20 PSF)
OTHERS: 4.8 KPA (100 PSF)
8.9 KN (2.0 K) CONCENTRATED LOAD

WIND LOADS PER IBC-2003

USING A "3-SECOND" WIND VELOCITY OF 125 KPH (78 MPH), EXPOSURE C AND IMPORTANCE FACTOR I=1.0

EARTHQUAKE LOADS PER IBC-2003:

USING A SEISMICITY: Ss=1.65g AND S_1 =0.75g

2. MATERIALS:

CONCRETE: 28 MPa (4 KSI)
CYLINDER STRENGTH AT 28 DAYS

REINFORCING: ASTM A615 GRADE 60 (60 KSI)

WELDED WIRE FABRIC: ASTM A185

CONCRETE MASONRY UNITS:
ASTM C90, TYPE I (NORMAL WEIGHT, MOISTURE CONTROLLED) MORTAR, ASTM C270, TYPE S
GROUT, ASTM C 476
JOINT REINFORCEMENT, LADDER TYPE

3. WORK THESE STRUCTURAL DRAWINGS WITH THE STANDARD-DETAILS DRAWINGS.

4. A RELATIVE (DATUM) FINISH FLOOR ELEVATION EQUAL TO 100.00 M. IS USED AS REFERENCE ELEVATION FOR ALL STRUCTURAL DRAWINGS. REFER TO CIVIL DRAWINGS FOR ACTUAL FINISH ELEVATIONS.

5. FOUNDATIONS ARE DESIGNED USING AN ALLOWABLE BEARING PRESSURE OF 0.75 KG/SQ. CM (1500 PSF), AND BOTTOM OF FOOTINGS ARE PLACED AS SHOWN ON DRAWINGS. GEOTECHNICAL INVESTIGATION SHALL CONFIRM BEARING CAPACITY TO BE NO LESS THAN 0.75 KG/SQ CM. IF GEOTECHNICAL INVESTIGATION SHOWS LESS THAN 0.75 KG/SQ CM THE CONTRACTOR SHALL REDESIGN FOOTINGS BASED ON THE GEOTECHNICAL INVESTIGATION. SEE SPECIFICAITON 01015 PARAGRAPH, GEOTECHNICAL, FOUNDATION AND SURVEY.

1 0 1 2 3 4
1:50

UNLESS OTHERWISE NOTED, LINEAR DIMENSIONS SHOWN ARE IN MILLIMETERS.

SYMBOL	DESCRIPTION	DATE	APP

DESIGNED BY: RG
DWN BY: TCP
CHK BY: KGO
DATE: 02-05-07
SUBMITTED BY: PHILIP L. DINELLO, CHIEF, PDT FACILITIES DEV.
FILE NO.: AF0701 D-SB01PN

US Army Corps of Engineers
Transatlantic Programs Center

AFGHAN NATIONAL POLICE HEADQUARTERS (2 STORY) COMPOUND
AFGHANISTAN
GUARD HOUSE
FOUNDATION AND SLAB PLAN
ROOF FRAMING PLAN

SHEET REFERENCE NUMBER:
D
S-1

3/9/2007
h:\projects\afghanistan\af0701\af0701\str\af0701d-sb01n.dwg

FOOTING SCHEDULE

NOTE:
REFER TO A/S-2 FOR TYPICAL SECTION OF FOOTINGS.

MARK	CONCRETE DIMENSIONS			REINFORCEMENT		FTG. BOTTOM EL. METERS	REMARKS
	WIDTH	LENGTH	THICKNESS	TOP	BOTTOM		
F1	1600	1600	300	——	5-Ø25 E.W.	98.5	

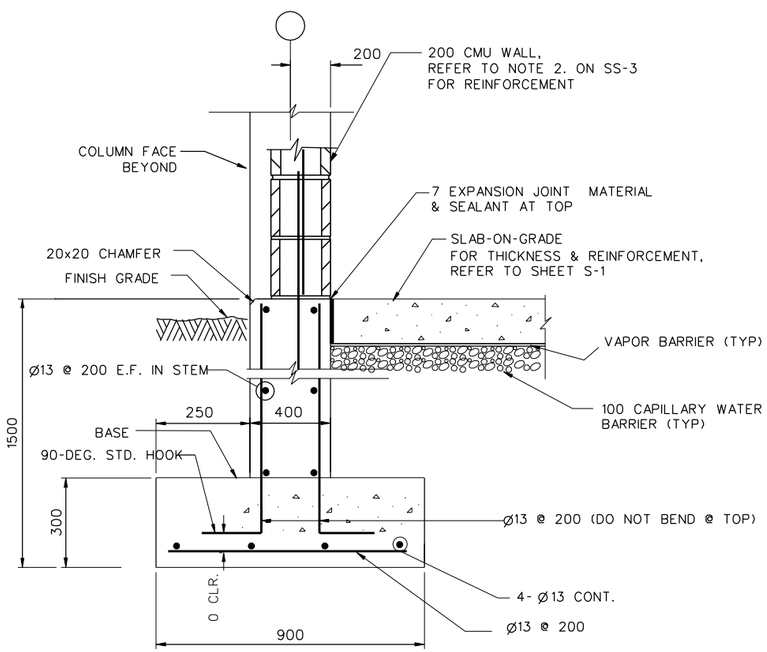

TYPICAL WALL FOOTING

SECTION 1 S-1 S-2
SCALE - N.T.S.

NOTES:
1. HORIZONTAL STEM WALL AND FOOTING REINFORCEMENTS ARE CONTINUOUS THROUGH COLUMN AND COLUMN FOOTING
2. AT DISCONTINUOUS STEM WALL BARS TERMINATE WITH STANDARD HOOK IN COLUMN. FOOTING BARS TERMINATE WITH 600 MM EMBEDMENT IN COLUMN FOOTING.
3. REFER TO CIVIL DWGS FOR ACTUAL FINISH FLOOR ELEVATIONS.

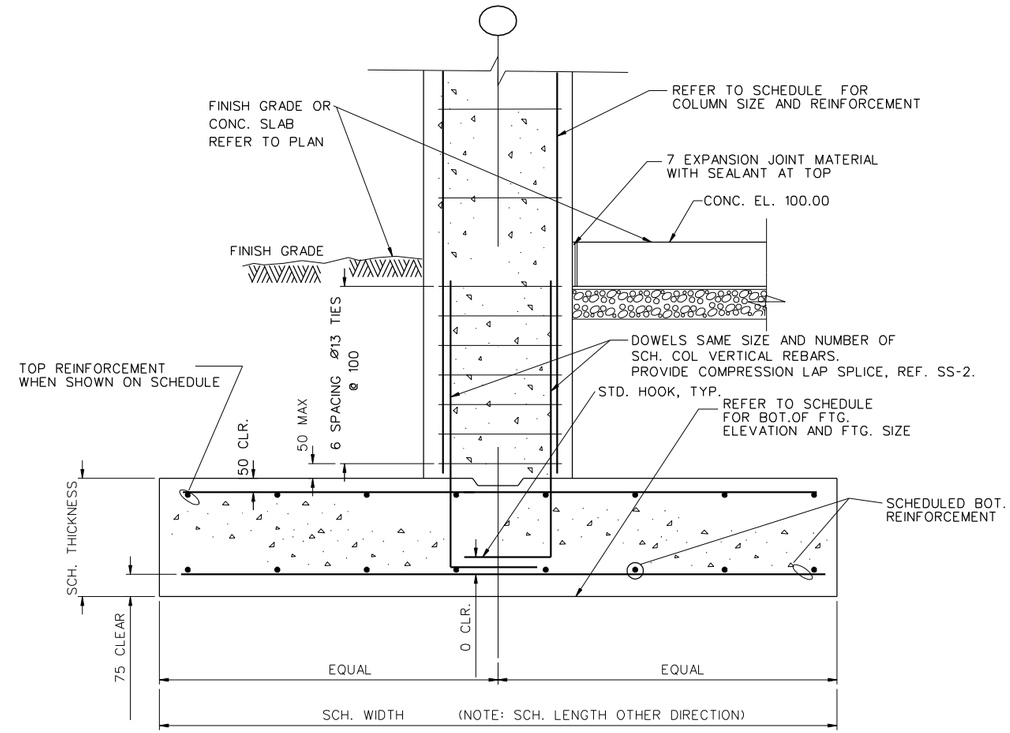

DETAIL A S-2 S-2
SCALE - N.T.S.

TYPICAL COLUMN FOOTING

UNLESS OTHERWISE NOTED, LINEAR DIMENSIONS SHOWN ARE IN MILLIMETERS.

SYMBOL	DESCRIPTION	DATE	APP.

DESIGNED BY: RG
DWN BY: TCP
CHK BY: KGO
DATE: 02-05-07
SUBMITTED BY: PHILIP L. DINELLO, CHIEF, PDT FACILITIES DEV.
FILE NO.: AF0701 D-SB02DT

US Army Corps of Engineers
Transatlantic Programs Center

AFGHAN NATIONAL POLICE HEADQUARTERS (2 STORY) COMPOUND
AFGHANISTAN
GUARD HOUSE
FOOTING DETAILS

SHEET REFERENCE NUMBER:
D
S-2

3/9/2007
h:\projects\afghanistan\af0701\af0701d\str\af0701d-sb02dt.dwg

COLUMN SCHEDULE

NOTES: 1. REFER TO DETAILS B&C/S-3 AND A/S-2 FOR TYPICAL COLUMN DETAILS.

COLUMN GRIDS	COLUMN TYPE	CONCRETE DIMENSIONS		VERTICAL REINFORCEMENT	TIE REINFORCEMENT	
		WIDTH	DEPTH		SIZE	SPACING
A-1, A-2 B-1, B-2	C1	400	400	8-Ø 29	Ø13	300

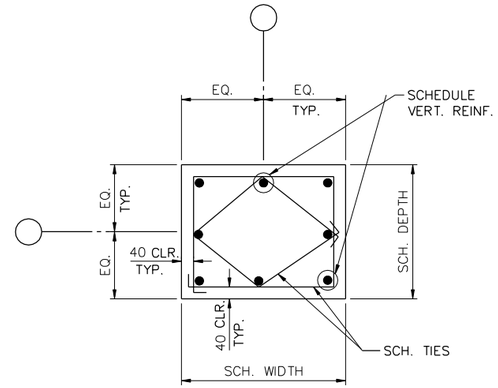

C1

COLUMN TYPE

DETAIL A S-3 | S-3
SCALE=N.T.S.

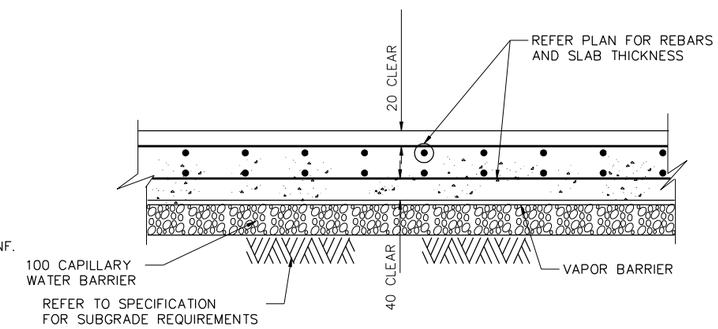

SLAB-ON-GRADE WITH TOP & BOTTOM REINFORCEMENTS

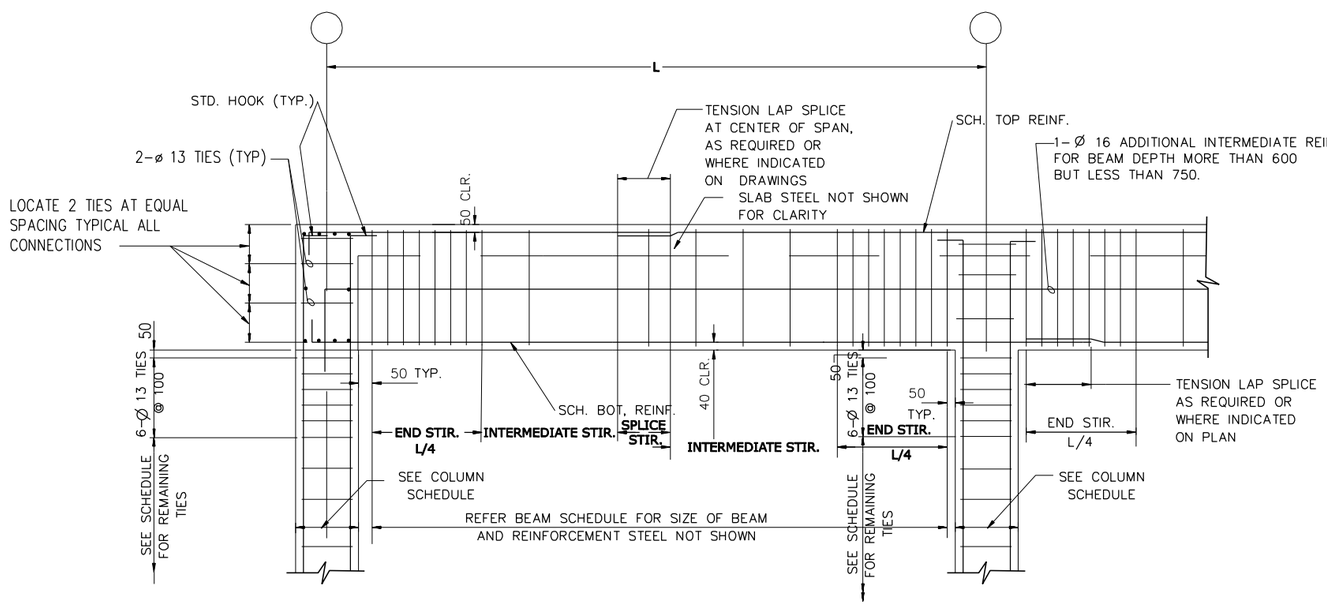

TYPICAL BEAM TO COLUMN END CONNECTION

DETAIL B S-3 | S-3
SCALE=N.T.S.

TYPICAL BEAM TO COLUMN INTERIOR CONNECTION

DETAIL C S-3 | S-3
SCALE=N.T.S.

UNLESS OTHERWISE NOTED, LINEAR DIMENSIONS SHOWN ARE IN MILLIMETERS.

SYMBOL	DESCRIPTION	DATE	APP.

DESIGNED BY: RG | DATE: 02-05-07
DWN BY: TCP | SUBMITTED BY: PHILIP L. DINELLO, CHIEF, POST FACILITIES DEV.
CHK BY: KGO | FILE NO.: AF0701 D-SF03DT

US Army Corps of Engineers
Transatlantic Programs Center

AFGHAN NATIONAL POLICE HEADQUARTERS (2 STORY) COMPOUND
AFGHANISTAN
GUARD HOUSE
SLAB-ON-GRADE DETAILS

SHEET REFERENCE NUMBER:
D
S-3

3/9/2007
h:\projects\afghanistan\af0701\af0701\str\af070ld-sf03dt.dwg

BEAM SCHEDULE

MARK	CONCRETE DIMENSIONS		FLEXURAL REINFORCEMENT		STIRRUP REINFORCEMENT				REMARKS
					SIZE	TYPE	SPACING		
	WIDTH	DEPTH	TOP	BOTTOM			ENDS & SPLICE	INTERMEDIATE	
RB1	400	700	4-Ø 22	4-Ø 22	Ø13		160	320	

NOTE: REFER TO DETAILS B&C/S-3 FOR TYPICAL BEAM ELEVATIONS AND SECTION 1/S-4 FOR TYPICAL BEAM SECTION.

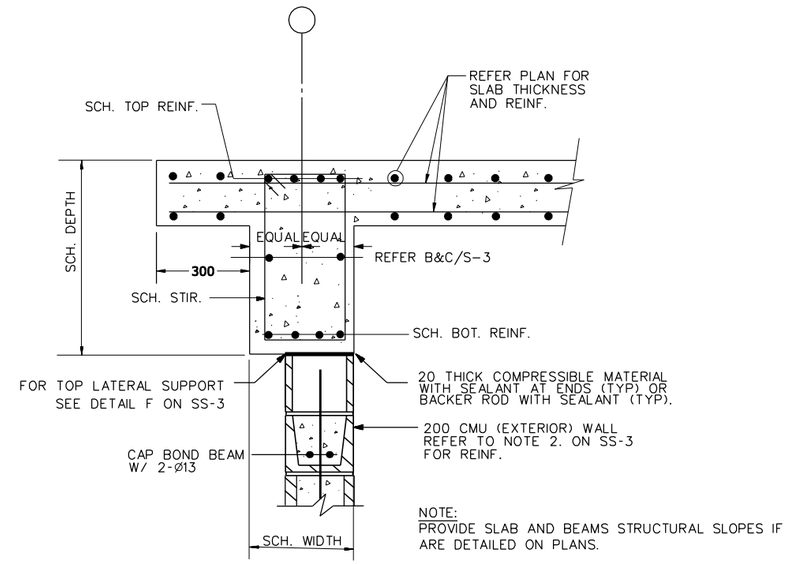

NOTE:
PROVIDE SLAB AND BEAMS STRUCTURAL SLOPES IF ARE DETAILED ON PLANS.

SECTION 1 (S-1 | S-4)
SCALE = N.T.S.

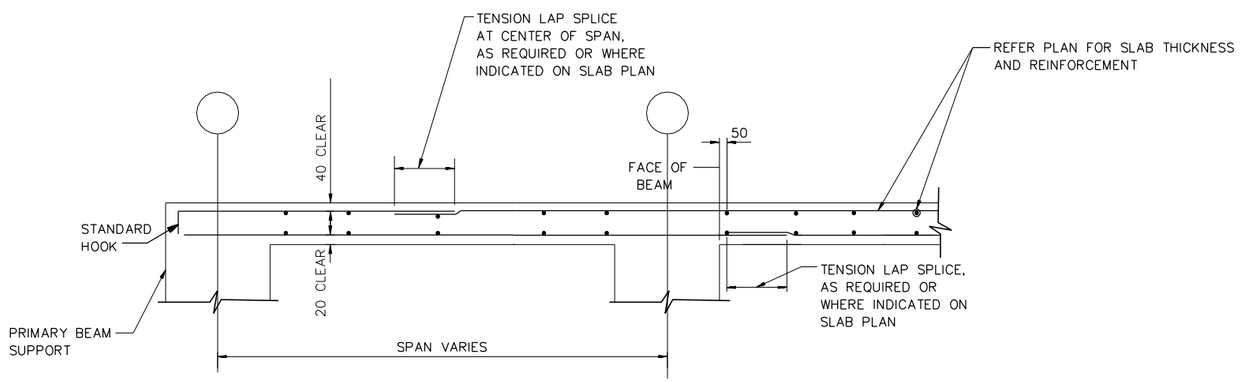

STRUCTURAL SLAB WITH TOP & BOTTOM REINFORCEMENTS

NOTE:

1. PROVIDE SIMILAR REINFORCEMENT PATTERNS FOR REINFORCEMENT RUNNING PERPENDICULAR TO SECTIONS.
2. PROVIDE SLAB AND BEAMS STRUCTURAL SLOPES IF ARE DETAILED ON PLANS.

TYPICAL SECTIONS FOR STRUCTURAL SLABS (A | S-4 | S-4)
SCALE = N.T.S.

UNLESS OTHERWISE NOTED, LINEAR DIMENSIONS SHOWN ARE IN MILLIMETERS.

SYMBOL	DESCRIPTION	DATE	APP

DESIGNED BY: RG
DATE: 02-05-07
DWN BY: TCP
SUBMITTED BY: PHILIP L. DINELLO, CHIEF, POST FACILITIES DEV.
CHK BY: KGO
FILE NO.: AF0701 D-SF04DT

US Army Corps of Engineers
Transatlantic Programs Center

AFGHAN NATIONAL POLICE HEADQUARTERS (2 STORY) COMPOUND
AFGHANISTAN
GUARD HOUSE
ROOF BEAM AND STRUCTURAL SLAB DETAILS

SHEET REFERENCE NUMBER:
D
S-4

3/9/2007
h:\projects\afghanistan\af0701\af0701\str\af0701d-sf04t.dwg

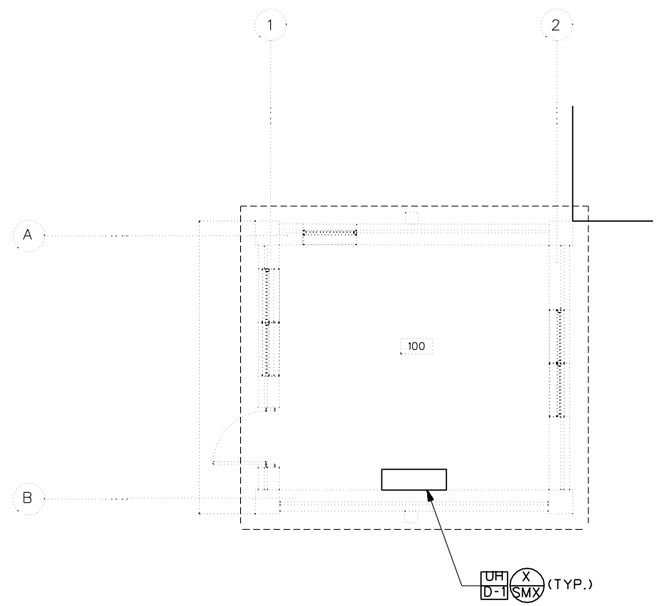

HVAC PLAN
SCALE= 1: 50

1 0 1 2 3 4
1:50

UNLESS OTHERWISE NOTED, LINEAR DIMENSIONS SHOWN ARE IN MILLIMETERS.

SYMBOL	DESCRIPTION	DATE	APP

DESIGNED BY: RMS
DATE: 02-05-07
DWN BY: RMS
SUBMITTED BY: SYED EMAYATULLA, CHIEF, PDU BLDG SYSTEMS
CHK BY: SE
FILE NO.: AF0701 D-MH01PN

US Army Corps of Engineers
Transatlantic Programs Center

AFGHAN NATIONAL POLICE HEADQUARTERS (2 STORY) COMPOUND
AFGHANISTAN
GUARD HOUSE
HVAC PLAN

SHEET REFERENCE NUMBER:
D
M-1

3/9/2007
h:\projects\afghanistan\af0701\af0701d\mec\AF0701D-MH01PN.DWG

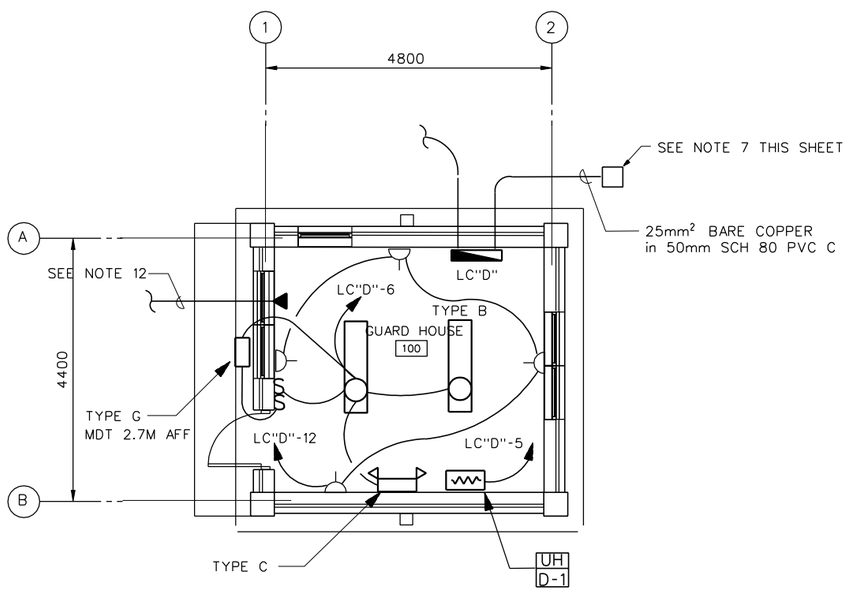

LIGHTING & POWER
NOT TO SCALE

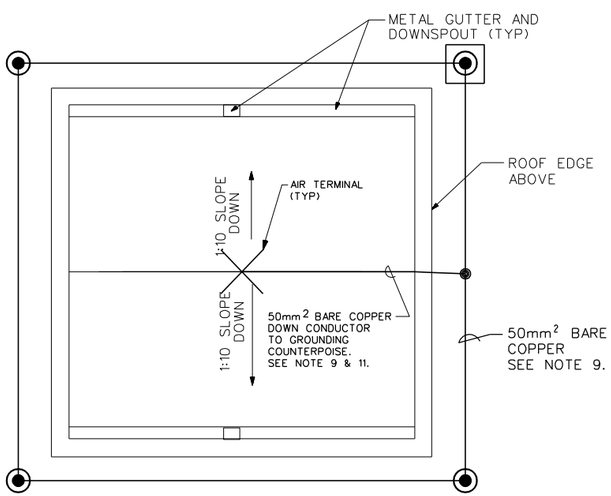

LIGHTNING PROTECTION
NOT TO SCALE

NOTES:

1. FOR LEGEND AND ABBREVIATIONS SEE DRAWING SE-1.
2. EMERGENCY LIGHT SHALL BE CONNECTED AHEAD OF LIGHT SWITCH.
3. FOR LIGHT FIXTURE SCHEDULE SEE DRAWING SE-1.
4. COORDINATE LOCATION OF ALL ELECTRICAL FIXTURES AND MECHANICAL EQUIPMENT WITH ALL OTHER TRADES.
5. ALL WIRING SHALL BE IN CONCEALED OR SURFACE MOUNTED METAL CONDUIT.
6. SEE DRAWING XE-1 FOR LOCATION OF GUARD SHACKS AND GUARD TOWERS.
7. FOR GROUNDING ROD ACCESS BOX DETAIL SEE SHEET SE-3.
8. FOR SECONDARY DISTRIBUTION SYSTEM (SDS) SEE SHEET XE-1 & XE-2. FOR SDS DETAILS SEE SHEET SE-4.
9. GROUNDING COUNTERPOISE 760 BELOW FINISHED GRADE (BFG) 1.5M FROM BUILDING FOUNDATION. ALL CONNECTIONS SHALL BE EXOTHERMIC WELD. SEE DETAILS ON SHEET SE-3 AND SE-7.
10. FOR LIGHTNING PROTECTION DETAILS SE SHEET SE-7.
11. REFER TO DRAWING XE-2 FOR CONDUIT AND CONDUCTOR SIZE.
12. PROVIDE 25MM EMPTY PVC CONDUIT WITH PULL WIRE TO A COMMUNICATION HAND HOLE LOCATED 1 METER OUTSIDE OF THE BUILDING. COORDINATE EXACT LOCATION OF THE HAND HOLE WITH THE CONTRACTING OFFICER. HAND HOLE SHALL BE PROVIDED WITH COVER.

PANELBOARD LC "D" SURFACE MOUNTED MINIMUM 14,000 ASYM. A.I.C. MIN.

_____ AMP. MAIN LUGS (OR) 60 AMP. MAIN BREAKER W/ 60 AMP. TRIP

CIRCUIT BREAKER TYPE 380/220 VOLTS 3 PHASE 4 WIRE 100 AMP. BUS

CKT. NO.	TRIP AMPS	NO. POLES	WIRE MM2	GND MM2	CONDUIT MM	LOAD SERVED	LOAD-V.A.			LOAD-V.A.			LOAD SERVED	CONDUIT MM	GND MM2	WIRE MM2	NO. POLES	TRIP AMPS	CKT. NO.
							AØ	BØ	CØ	AØ	BØ	CØ							
1	40	1	16	6	38	PANEL LC"F1" (GUARD SHACK #1)	5400						SPARE				1	20	2
3	40	1	16	6	38	PANEL LC"E2" (GUARD TOWER #2)		6280					SPARE				1	20	4
5	20	1	4	4	20	ELECT UNIT HEATER			4000			310	LIGHTING CIRCUITS	20	4	4	1	20	6
7						SPACE							SPARE				1	20	8
9						SPACE							SPARE				1	20	10
11						SPACE						720	RECEPTICAL CIRCUITS	20	4	4	1	20	12
13						SPACE							SPACE						14
15						SPACE							SPACE						16
							5400	6280	4000	0	0	1030							

TOTAL CONN. LOAD 16.7 KVA 80 % DEMAND = ESTIMATED DEMAND LOAD: 13.4 KVA

TOTAL CONN. LOAD
PER PHASE (KVA): AØ 5.4 BØ 6.3 CØ 5.0
SUPPLIED FROM POWER PLANT SWITCHBOARD(PPSB)

1 .50 0 1 1.5
1:25

UNLESS OTHERWISE NOTED, LINEAR DIMENSIONS SHOWN ARE IN MILLIMETERS.

SYMBOL	DESCRIPTION	DATE	APP

DESIGNED BY: MM
DATE: 02-05-07
DWN. BY: MM
SUBMITTED BY: SYED EMAYATULLA CHIEF, PDT BLDG SYSTEMS
CHK BY: SE
FILE NO.: AF0701 D-ELOIPN

US Army Corps of Engineers
Transatlantic Programs Center

AFGHAN NATIONAL POLICE HEADQUARTERS (2 STORY) COMPOUND
AFGHANISTAN
GUARD HOUSE
LIGHTING & POWER PLAN

SHEET REFERENCE NUMBER:
D
E-1

3/9/2007
h:\projects\afghanistan\af0701\af0701\ele\AF0701D-ELOIPN.dwg

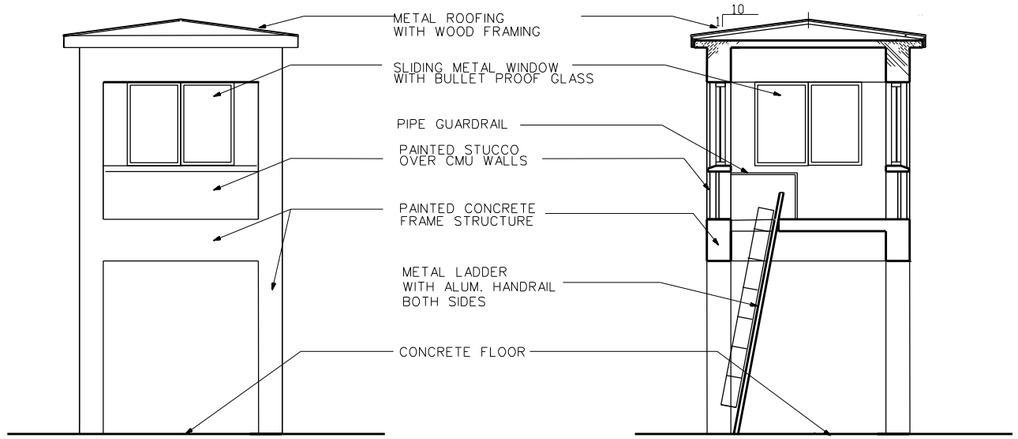

ELEVATION
SCALE = 1:50
A
A-1 A-1

SECTION
SCALE = 1:50
1
A-1 A-1

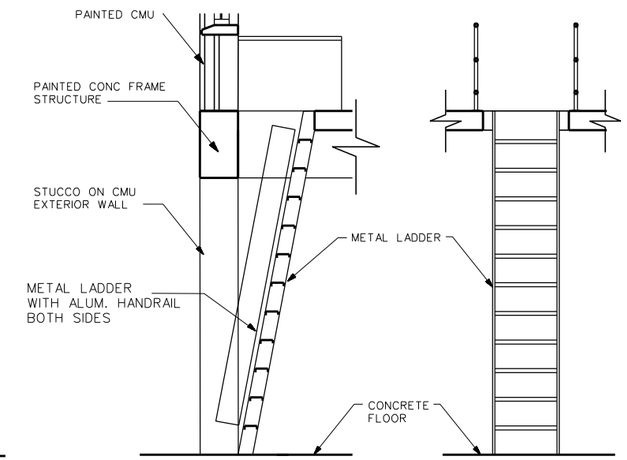

SECTION ELEVATION

GUARD TOWER ACCESS LADDER
(NOT TO SCALE)
A
SA-4

GENERAL NOTES:

1. ALL CMU WALLS AND CEILINGS SHALL BE PLASTERED AND PAINTED.
2. CONTRACTOR SHALL CONFIGURE THE METAL ROOFING AS SHOWN AND CONSTRUCT WITH APPROPRIATE WOOD FRAMING.
3. FLOOR SHALL BE SEALED CONCRETE.

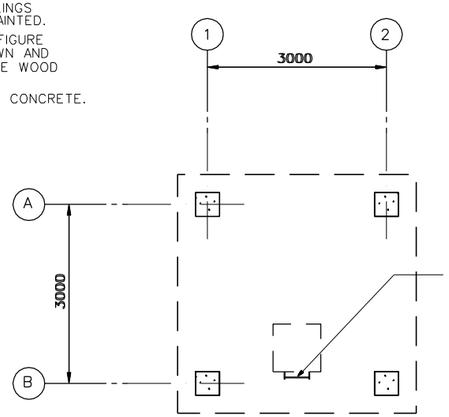

GROUND LEVEL PLAN
SCALE = 1:50

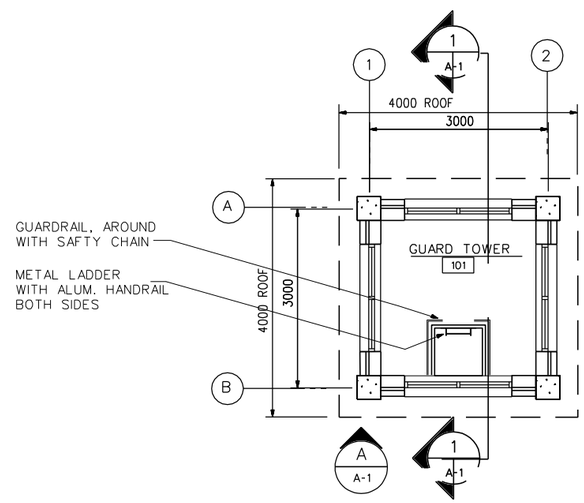

FIRST FLOOR PLAN
SCALE = 1:50

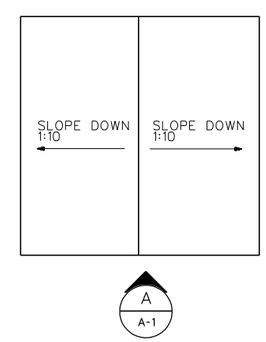

ROOF PLAN
SCALE = 1:50

UNLESS OTHERWISE NOTED, LINEAR DIMENSIONS SHOWN ARE IN MILLIMETERS.

SYMBOL	DESCRIPTION	DATE	APP

DESIGNED BY: S. Hanna
DATE: 02-05-07
DWN BY: S. Hanna
SUBMITTED BY: PHILIP L. DINELLO, CHIEF, POST FACILITIES DEV.
CHK BY:
FILE NO.: AF0701 E-AR01PN

US Army Corps of Engineers
Transatlantic Programs Center

AFGHAN NATIONAL POLICE HEADQUARTERS (2 STORY) COMPOUND
AFGHANISTAN
GUARD TOWER
FLOOR PLANS AND ELEVATIONS

SHEET REFERENCE NUMBER:
E
A-1

3/9/2007
h:\projects\afghanistan\af0701\af0701\arc\af0701E-ar01pn.dwg

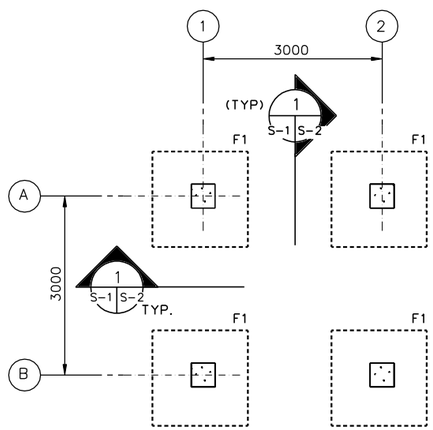

FOUNDATION AND SLAB PLAN
SCALE- 1:50

1. DESIGN LOADS (SERVICE)

LIVE LOADS:

ROOF: 1.0 KPA (20 PSF)
OTHERS: 4.8 KPA (100 PSF)
8.9 KN (2.0 K) CONCENTRATED LOAD

WIND LOADS PER IBC-2003

USING A "3-SECOND" WIND VELOCITY OF 125 KPH (78 MPH), EXPOSURE C AND IMPORTANCE FACTOR I=1.0

EARTHQUAKE LOADS PER IBC-2003:

USING A SEISMICITY: Ss=1.65g AND S_1=0.75g

2. MATERIALS:

CONCRETE: 28 MPa (4 KSI)
CYLINDER STRENGTH AT 28 DAYS

REINFORCING: ASTM A615 GRADE 60 (60 KSI)

WELDED WIRE FABRIC: ASTM A185

CONCRETE MASONRY UNITS:
ASTM C90, TYPE I (NORMAL WEIGHT, MOISTURE CONTROLLED) MORTAR, ASTM C270, TYPE S
GROUT, ASTM C 476
JOINT REINFORCEMENT, LADDER TYPE

3. WORK THESE STRUCTURAL DRAWINGS WITH THE STANDARD-DETAILS DRAWINGS.

4. A RELATIVE (DATUM) FINISH FLOOR ELEVATION EQUAL TO 100.00 M. IS USED AS REFERENCE ELEVATION FOR ALL STRUCTURAL DRAWINGS. REFER TO CIVIL DRAWINGS FOR ACTUAL FINISH ELEVATIONS.

5. FOUNDATIONS ARE DESIGNED USING AN ALLOWABLE BEARING PRESSURE OF 0.75 KG/SQ. CM (1500 PSF), AND BOTTOM OF FOOTINGS ARE PLACED AS SHOWN ON DRAWINGS. GEOTECHNICAL INVESTIGATION SHALL CONFIRM BEARING CAPACITY TO BE NO LESS THAN 0.75 KG/SQ CM. IF GEOTECHNICAL INVESTIGATION SHOWS LESS THAN 0.75 KG/SQ CM THE CONTRACTOR SHALL REDESIGN FOOTINGS BASED ON THE GEOTECHNICAL INVESTIGATION. SEE SPECIFICAITON 01015 PARAGRAPH, GEOTECHNICAL, FOUNDATION AND SURVEY.

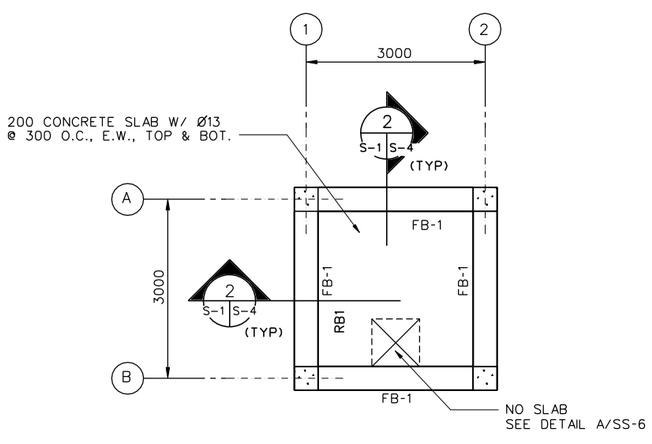

FIRST FLOOR PLAN
SCALE- 1:50

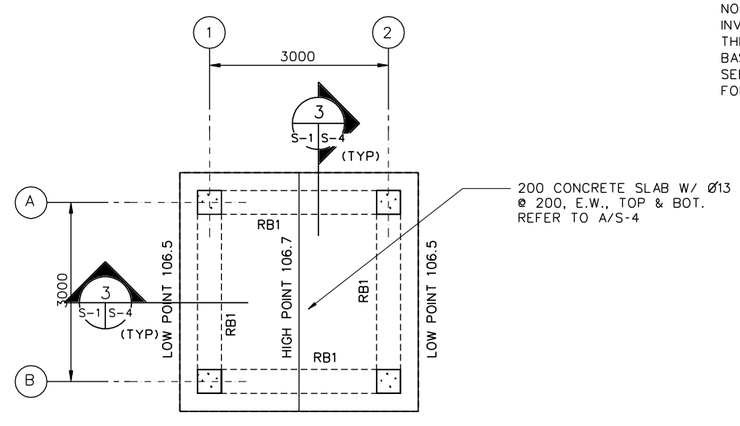

ROOF FRAMING PLAN
SCALE- 1:50

1 0 1 2 3 4
1:50

UNLESS OTHERWISE NOTED, LINEAR DIMENSIONS SHOWN ARE IN MILLIMETERS.

SYMBOL	DESCRIPTION	DATE	APP.

DESIGNED BY: RG
DATE: 02-05-07
DWN BY: TCP
SUBMITTED BY: PHILIP L. DINELLO CHIEF, POST FACILITIES DEV.
CHK BY: KGO
FILE NO.: AF0701 E-SB01PN

US Army Corps of Engineers
Transatlantic Programs Center

AFGHAN NATIONAL POLICE HEADQUARTERS (2 STORY) COMPOUND
AFGHANISTAN
GUARD TOWER
FOUNDATION AND SLAB PLAN
ROOF FRAMING PLAN

SHEET REFERENCE NUMBER:
E
S-1

3/9/2007
h:\projects\afghanistan\af0701\af0701e\str\AR0701E-SB01PN.dwg

FOOTING SCHEDULE

NOTE:
REFER TO 1/S-2 FOR TYPICAL SECTION OF FOOTINGS.

MARK	CONCRETE DIMENSIONS			REINFORCEMENT		FTG. BOTTOM EL. METERS	REMARKS
	WIDTH	LENGTH	THICKNESS	TOP	BOTTOM		
F1	1600	1600	300	——	5-Ø25 E.W.	98.5	

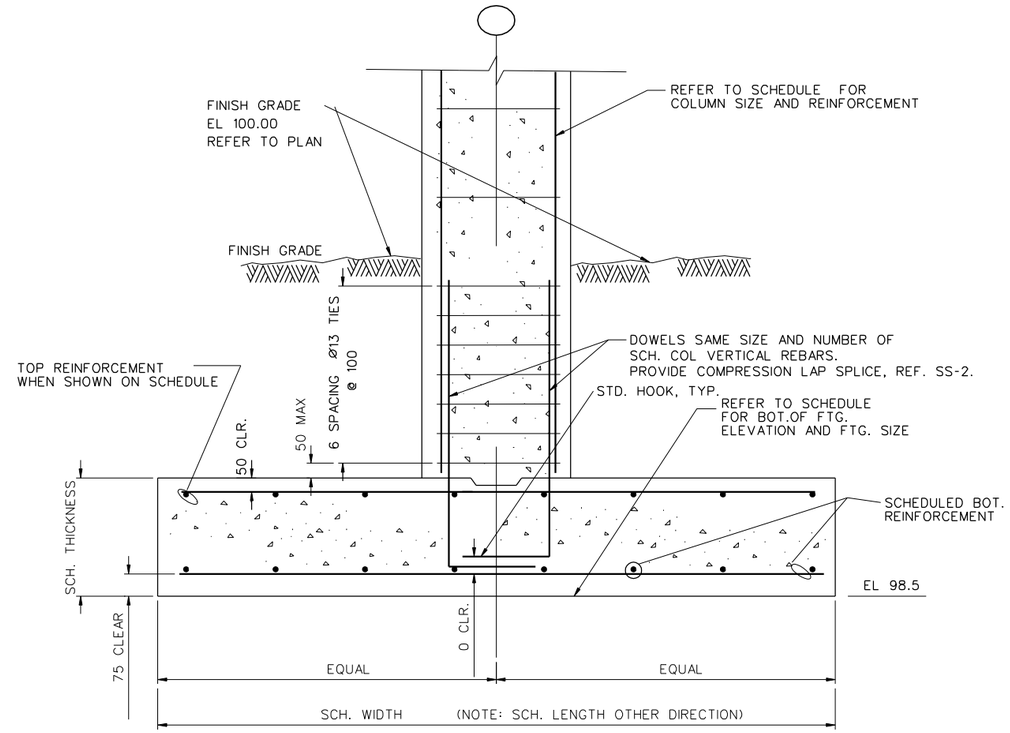

SECTION 1 S-1 S-2
SCALE • N.T.S.

UNLESS OTHERWISE NOTED, LINEAR DIMENSIONS SHOWN ARE IN MILLIMETERS.

SYMBOL	DESCRIPTION	DATE	APP

DESIGNED BY: RG
DATE: 02-05-07
DWN BY: TCP
SUBMITTED BY: PHILIP L. DINELLO CHIEF, POST FACILITIES DEV.
CHK BY: KGO
FILE NO.: AF0701 E-SB02DT

US Army Corps of Engineers
Transatlantic Programs Center

AFGHAN NATIONAL POLICE HEADQUARTERS (2 STORY) COMPOUND
AFGHANISTAN
GUARD TOWER
FOOTING DETAILS

SHEET REFERENCE NUMBER:
E
S-2

3/9/2007
h:\projects\afghanistan\af0701\af0701s\str\AR0701E-SB02DT.dwg

COLUMN SCHEDULE

NOTES: 1. REFER TO DETAILS B/S-3 AND 1/S-2 FOR TYPICAL COLUMN DETAILS.

COLUMN GRIDS	COLUMN TYPE	CONCRETE DIMENSIONS		VERTICAL REINFORCEMENT	TIE REINFORCEMENT	
		WIDTH	DEPTH		SIZE	SPACING
A-1, A-2 B-1, B-2	C1	400	400	8-Ø 29	Ø13	300

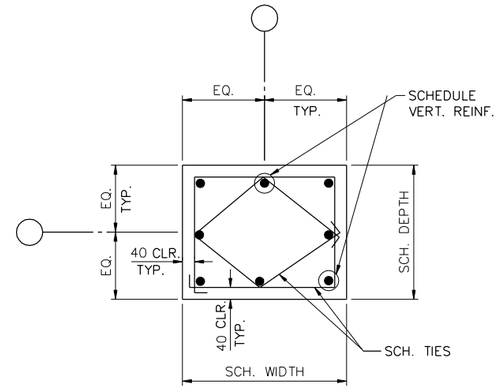

C1

COLUMN TYPE

DETAIL
SCALE = N.T.S.
A
S-3 S-3

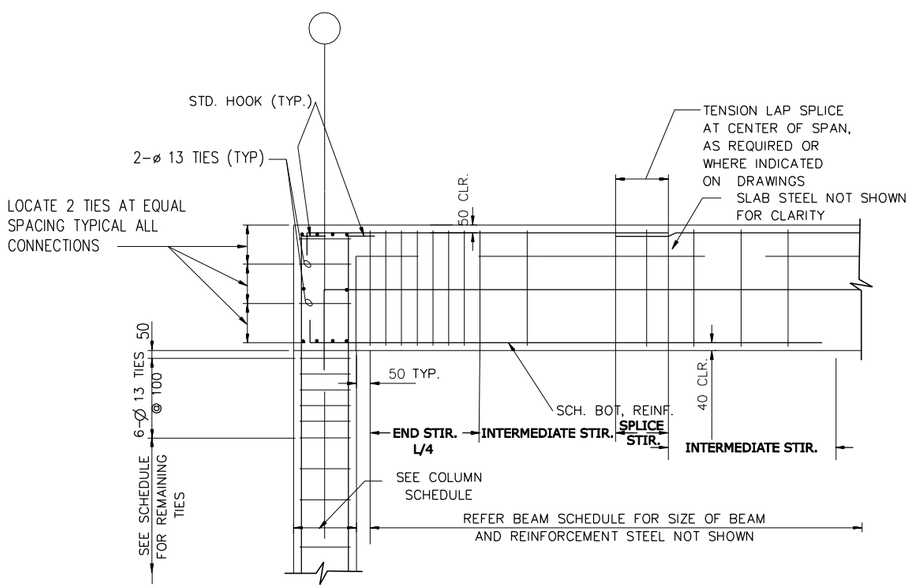

TYPICAL BEAM TO COLUMN END CONNECTION

DETAIL
SCALE = N.T.S.
B
S-3 S-3

UNLESS OTHERWISE NOTED, LINEAR DIMENSIONS SHOWN ARE IN MILLIMETERS.

SYMBOL	DESCRIPTION	DATE	APP.

DESIGNED BY: RG
DATE: 02-05-07
DWN BY: TCP
SUBMITTED BY: PHILIP L. DINELLO CHIEF, POST FACILITIES DEV.
CHK BY: KGO
FILE NO.: AF0701 E-SF03DT

US Army Corps of Engineers
Transatlantic Programs Center

AFGHAN NATIONAL POLICE HEADQUARTERS (2 STORY) COMPOUND
AFGHANISTAN
GUARD TOWER
SLAB-ON-GRADE DETAILS

SHEET REFERENCE NUMBER:
E
S-3

3/9/2007
h:\projects\afghanistan\af0701\af0701\str\AR0701E-SF03DT.dwg

BEAM SCHEDULE

MARK	CONCRETE DIMENSIONS		FLEXURAL REINFORCEMENT		STIRRUP REINFORCEMENT				REMARKS
					SIZE	TYPE	SPACING		
	WIDTH	DEPTH	TOP	BOTTOM			ENDS & SPLICE	INTERMEDIATE	
FB1	400	700	4-Ø 25	4-Ø 25	Ø13		160	320	
RB1	400	700	4-Ø 22	4-Ø 22	Ø13		160	320	

NOTE: REFER TO DETAILS B/S-3 FOR TYPICAL BEAM ELEVATIONS AND SECTION 2&3/S-4 FOR TYPICAL BEAM SECTION.

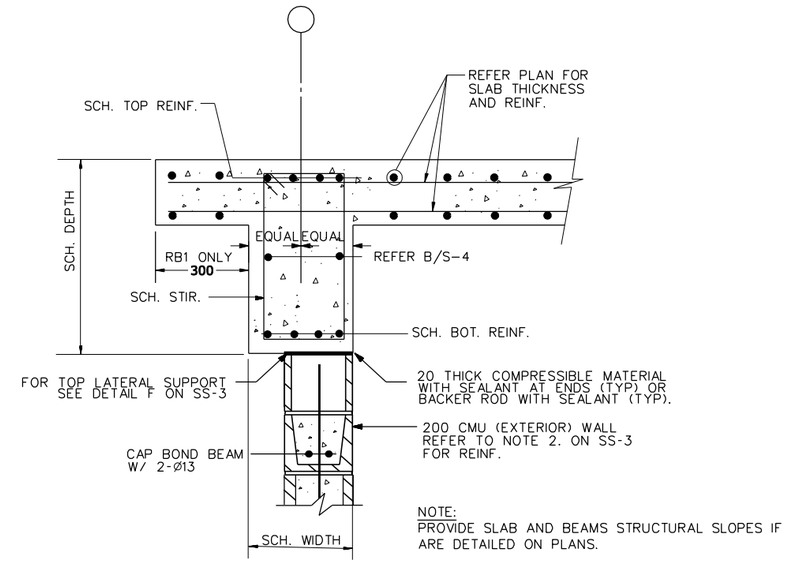

SECTION 3 S-1 S-4
SCALE = N.T.S.

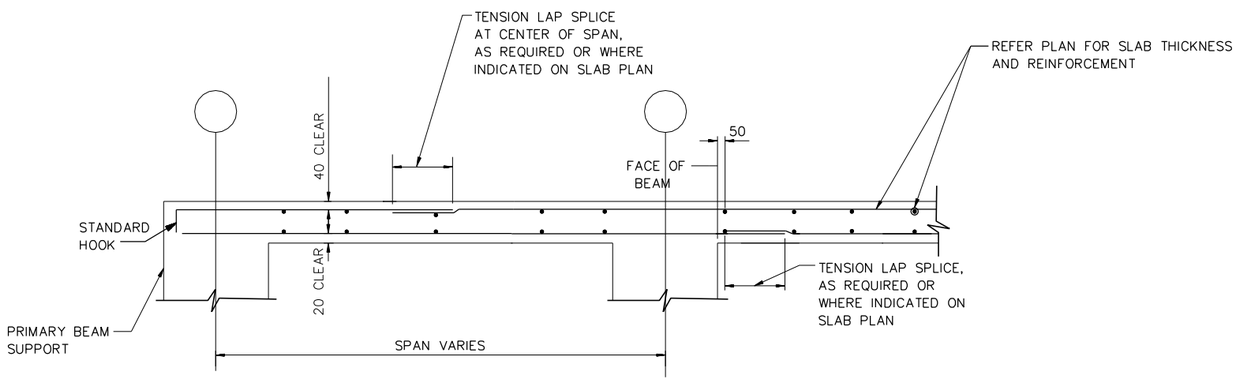

STRUCTURAL SLAB WITH TOP & BOTTOM REINFORCEMENTS

TYPICAL SECTIONS FOR STRUCTURAL SLABS A S-4 S-4
SCALE = N.T.S.

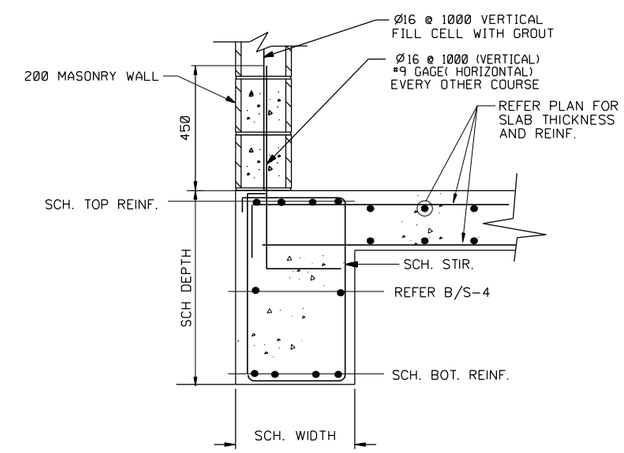

SECTION 2 S-1 S-4
SCALE 1:10

NOTE:

1. PROVIDE SIMILAR REINFORCEMENT PATTERNS FOR REINFORCEMENT RUNNING PERPENDICULAR TO SECTIONS.
2. PROVIDE SLAB AND BEAMS STRUCTURAL SLOPES IF ARE DETAILED ON PLANS.

UNLESS OTHERWISE NOTED, LINEAR DIMENSIONS SHOWN ARE IN MILLIMETERS.

SYMBOL	DESCRIPTION	DATE	APP

DESIGNED BY: RG
DATE: 02-05-07
DWN BY: TCP
SUBMITTED BY: PHILIP L. DINELLO, CHIEF, POST FACILITIES DEV.
CHK BY: KGO
FILE NO.: AF0701 E-SF04DT

US Army Corps of Engineers
Transatlantic Programs Center

AFGHAN NATIONAL POLICE HEADQUARTERS (2 STORY) COMPOUND
AFGHANISTAN
GUARD TOWER
ROOF BEAM AND STRUCTURAL SLAB DETAILS

SHEET REFERENCE NUMBER:
E
S-4

3/9/2007
h:\projects\afghanistan\af0701\af0701\str\AR0701E-SF04DT.dwg

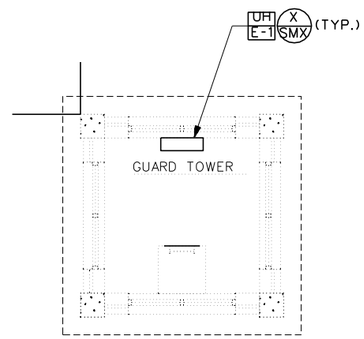

HVAC PLAN
SCALE: 1: 50

1 0 1 2 3 4
1:50

UNLESS OTHERWISE NOTED, LINEAR DIMENSIONS SHOWN ARE IN MILLIMETERS.

SYMBOL	DESCRIPTION	DATE	APP

DESIGNED BY: RMS
DATE: 02-05-07
DWN BY: RMS
SUBMITTED BY: SYED ENAYATULLA, CHIEF, PDU BLDG SYSTEMS
CHK BY: SE
FILE NO.: AF0701 E-MH01PN

US Army Corps of Engineers
Transatlantic Programs Center

AFGHAN NATIONAL POLICE HEADQUARTERS (2 STORY) COMPOUND
AFGHANISTAN
GUARD TOWER
HVAC PLAN

SHEET REFERENCE NUMBER:
E
M-1

3/9/2007
h:\projects\afghanistan\af0701\af0701e\mec\AF0701E-MH01PN.DWG

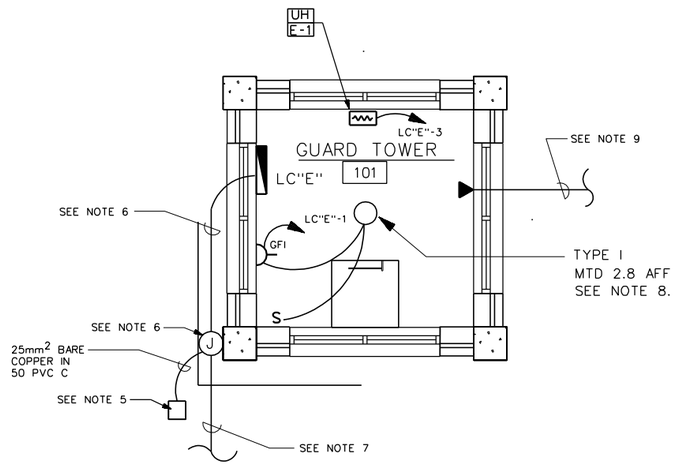

LIGHTING & POWER

NOT TO SCALE

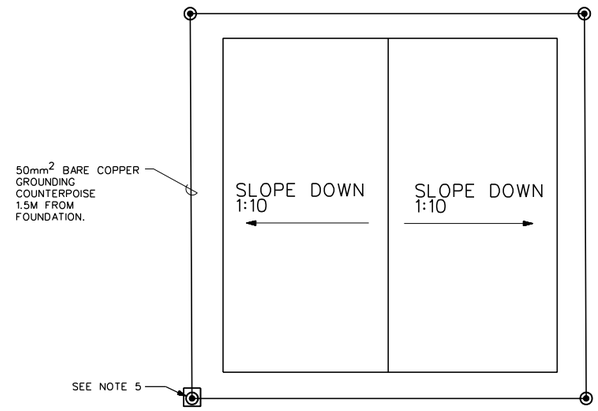

GROUNDING SYSTEM

NOT TO SCALE

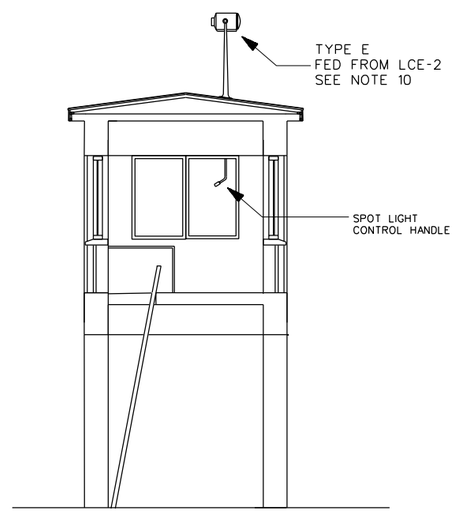

SPOTLIGHT MOUNTING DETAIL

NOT TO SCALE

NOTES:

1. FOR LEGEND, ABBREVIATIONS AND LIGHT FIXTURE SCHEDULE SEE DRAWING SE-1.
2. COORDINATE LOCATION OF ALL ELECTRICAL DEVICES AND EQUIPMENT WITH ALL OTHER TRADES.
3. ALL WIRING SHALL BE IN CONCEALED OR SURFACE MOUNTED METAL CONDUIT.
4. PLAN IS TYPICAL FOR ALL GUARD TOWERS 1-4. GUARD TOWERS #1, 3, & 4 ARE POWERED FROM PPSB. GUARD TOWER #2 IS POWERED FROM THE GUARD HOUSE PANEL LC"D", SEE GUARD HOUSE PANEL SCHEDULE DRAWING E-1.
5. FOR GROUNDING ROD ACCESS BOX DETAIL SEE SHEET SE-3.
6. PROVIDE 50MM METAL CONDUIT WITH TWO 16mm2 COPPER CONDUCTORS AND 16mm2 COPPER GROUNDING CONDUCTOR TO JUNCTION BOX. FOR JUNCTION BOX DETAIL SEE SHEET SE-5.
7. REFER TO DRAWING XE-1 FOR CONDUIT AND CONDUCTOR SIZE.
8. PROVIDE A MANUFACTURER SUPPLIED RED, BLUE, AND BLACK LIGHT FIXTURE GLOBE.
9. PROVIDE 25MM EMPTY PVC CONDUIT WITH PULL WIRE TO A COMMUNICATION HAND HOLE LOCATED 1 METER OUTSIDE OF THE BUILDING. COORDINATE EXACT LOCATION OF THE HAND HOLE WITH THE CONTRACTING OFFICER. HAND HOLE SHALL BE PROVIDED WITH COVER.
10. SPOT LIGHT SHALL BE BALLISTIC RESISTANT TYPE AND SHALL HAVE ANTI-SHOCK LAMPHOLDER TO PREVENT BREAKAGE OF THE FILAMENT DUE TO IMPACT FROM BULLETS.

LOAD CENTER "E" GUARD TOWER #1, 2, 3, & 4 (SEE NOTE 4)

40 AMP MAIN CIRCUIT BREAKER, 220V, 1 PH, 2W, 50 HZ, 100A BUS, 10000 AIC

CKT. NO.	TRIP AMPS	NO. POLES	WIRE MM2	GND MM2	CONDUIT MM	LOAD SERVED	LOAD-V.A.
1	20	1	4	4	20	LIGHTING & RECEPTACLES	280
2	20	1	4	4	20	SPOT LIGHT, 1000W	1000
3	20	1	4	4	20	ELECT.HEAT GUARD SHACK#2	4000
4	20	1				SPARE	500
5	20	1				SPARE	500
6						SPACE	
7						SPACE	
8						SPACE	
						TOTAL CONN. LOAD	6280

TOTAL CONN. LOAD 6.3 KVA.

80 %DEMAND = EST. DEMAND LOAD: 5.0 SERVED FROM: PPSB

UNLESS OTHERWISE NOTED, LINEAR DIMENSIONS SHOWN ARE IN MILLIMETERS.

SYMBOL	DESCRIPTION	DATE	APP.

DESIGNED BY: MM
DATE: 02-05-07
DWN. BY: MM
SUBMITTED BY: SYED EMAYATULLA CHIEF, PDT BLDG SYSTEMS
CHK BY: SE
FILE NO.: AF0701 E-ELOIPN

US Army Corps of Engineers
Transatlantic Programs Center

AFGHAN NATIONAL POLICE HEADQUARTERS (2 STORY) COMPOUND
AFGHANISTAN
GUARD TOWER
LIGHTING & POWER PLAN

SHEET REFERENCE NUMBER:
E
E-1

3/9/2007
h:\projects\afghanistan\af0701\af0701e\ele\AF0701E-ELOIPN.dwg

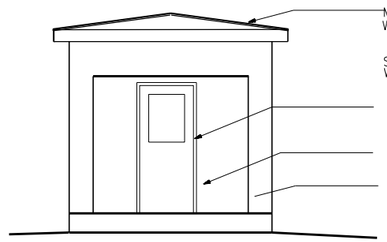

ELEVATION
SCALE = 1:50
A
A-1 A-1

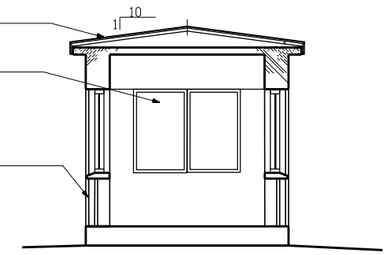

SECTION
SCALE = 1:50
1
A-1 A-1

GENERAL NOTES:

1. ALL CMU WALLS AND CEILINGS SHALL BE PLASTERED AND PAINTED.
2. CONTRACTOR SHALL CONFIGURE THE METAL ROOFING AS SHOWN AND CONSTRUCT WITH APPROPRIATE WOOD FRAMING.
3. FLOOR SHALL BE SEALED CONCRETE.

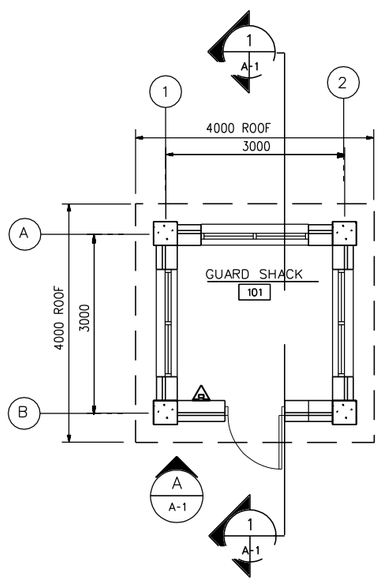

FIRST FLOOR PLAN
SCALE = 1:50

PROVIDE PORTABLE FIRE EXTINGUISHERS, ABC DRY CHEMICAL 4A:60B:C

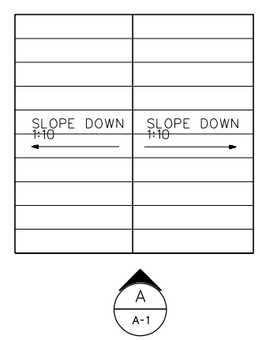

ROOF PLAN
SCALE = 1:50

UNLESS OTHERWISE NOTED, LINEAR DIMENSIONS SHOWN ARE IN MILLIMETERS.

SYMBOL	DESCRIPTION	DATE	APP

DESIGNED BY: S. Hanna
DATE: 02-05-07
DWN BY: S. Hanna
SUBMITTED BY: PHILIP L. DINELLO, CHIEF, POST FACILITIES DEV.
CHK BY: CHECK_BY
FILE NO.: AF0701 F-AR01PN

US Army Corps of Engineers
Transatlantic Programs Center

AFGHAN NATIONAL POLICE HEADQUARTERS (2 STORY) COMPOUND
AFGHANISTAN
GUARD SHACK
FLOOR PLANS AND ELEVATIONS

SHEET REFERENCE NUMBER:
F
A-1

3/9/2007
h:\projects\afghanistan\af0701\af0701\arc\af0701F-ar01n.dwg

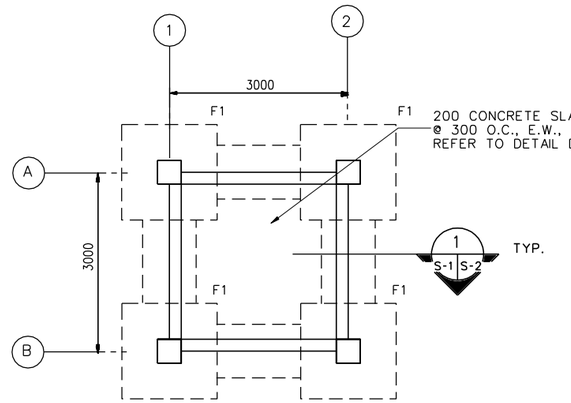

FOUNDATION AND SLAB PLAN

SCALE=1:50

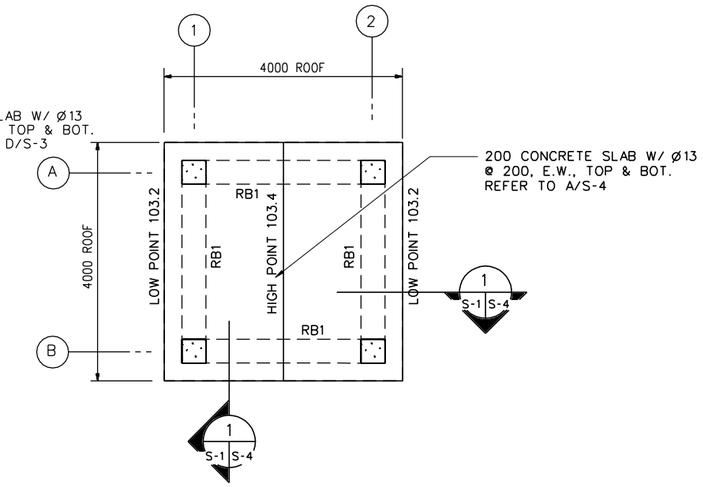

ROOF PLAN

SCALE=1:50

1. DESIGN LOADS (SERVICE)

LIVE LOADS:

ROOF: 1.0 KPA (20 PSF)
OTHERS: 4.8 KPA (100 PSF)
8.9 KN (2.0 K) CONCENTRATED LOAD

WIND LOADS PER IBC-2003

USING A "3-SECOND" WIND VELOCITY OF 125 KPH (78 MPH), EXPOSURE C AND IMPORTANCE FACTOR I=1.0

EARTHQUAKE LOADS PER IBC-2003:

USING A SEISMICITY: S_s=1.65g AND S_1=0.75g

2. MATERIALS:

CONCRETE: 28 MPa (4 KSI)
CYLINDER STRENGTH AT 28 DAYS

REINFORCING: ASTM A615 GRADE 60 (60 KSI)

WELDED WIRE FABRIC: ASTM A185

CONCRETE MASONRY UNITS:
ASTM C90, TYPE I (NORMAL WEIGHT, MOISTURE CONTROLLED) MORTAR, ASTM C270, TYPE S
GROUT, ASTM C 476
JOINT REINFORCEMENT, LADDER TYPE

3. WORK THESE STRUCTURAL DRAWINGS WITH THE STANDARD-DETAILS DRAWINGS.

4. A RELATIVE (DATUM) FINISH FLOOR ELEVATION EQUAL TO 100.00 M. IS USED AS REFERENCE ELEVATION FOR ALL STRUCTURAL DRAWINGS. REFER TO CIVIL DRAWINGS FOR ACTUAL FINISH ELEVATIONS.

5. FOUNDATIONS ARE DESIGNED USING AN ALLOWABLE BEARING PRESSURE OF 0.75 KG/SQ. CM (1500 PSF), AND BOTTOM OF FOOTINGS ARE PLACED AS SHOWN ON DRAWINGS. GEOTECHNICAL INVESTIGATION SHALL CONFIRM BEARING CAPACITY TO BE NO LESS THAN 0.75 KG/SQ CM. IF GEOTECHNICAL INVESTIGATION SHOWS LESS THAN 0.75 KG/SQ CM THE CONTRACTOR SHALL REDESIGN FOOTINGS BASED ON THE GEOTECHNICAL INVESTIGATION. SEE SPECIFICAITON 01015 PARAGRAPH, GEOTECHNICAL, FOUNDATION AND SURVEY.

1 0 1 2 3 4
1:50

UNLESS OTHERWISE NOTED, LINEAR DIMENSIONS SHOWN ARE IN MILLIMETERS.

SYMBOL	DESCRIPTION	DATE	APP.

DESIGNED BY: RG
DATE: 02-05-07
DWN BY: TCP
SUBMITTED BY: PHILIP L. DINELLO CHIEF, PDT FACILITIES DEV.
CHK BY: KGO
FILE NO.: AF0701 F-SB01PN

US Army Corps of Engineers
Transatlantic Programs Center

AFGHAN NATIONAL POLICE HEADQUARTERS (2 STORY) COMPOUND
AFGHANISTAN
GUARD SHACK
FOUNDATION AND SLAB PLAN
ROOF FRAMING PLAN

SHEET REFERENCE NUMBER:
F
S-1

3/9/2007
h:\projects\afghanistan\af0701\af0701\str\AF0701F-SB01PN.dwg

FOOTING SCHEDULE

NOTE:
REFER TO A/S-2 FOR TYPICAL SECTION OF FOOTINGS.

MARK	CONCRETE DIMENSIONS			REINFORCEMENT		FTG. BOTTOM EL. METERS	REMARKS
	WIDTH	LENGTH	THICKNESS	TOP	BOTTOM		
F1	1600	1600	300	——	5-Ø25 E.W.	98.5	

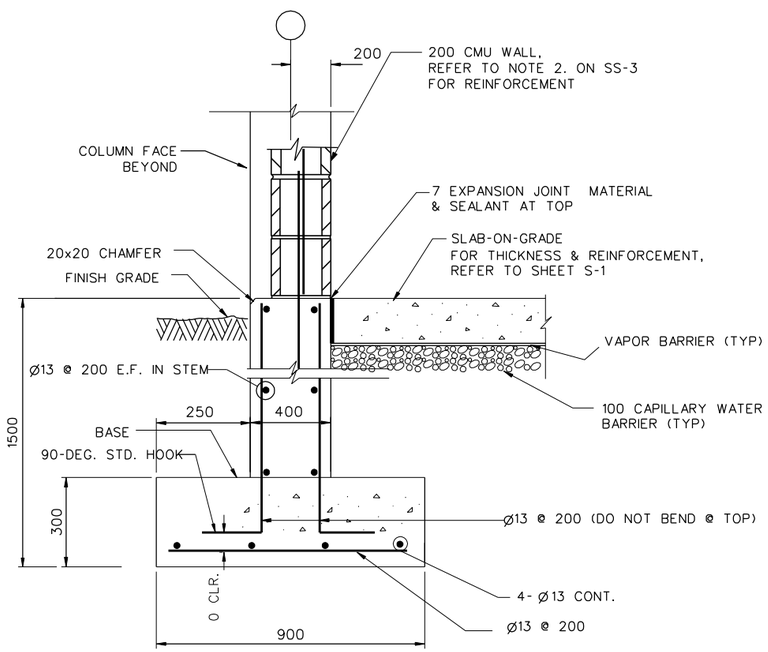

TYPICAL WALL FOOTING

SECTION 1 / S-1 S-2
SCALE=N.T.S.

NOTES:
1. HORIZONTAL STEM WALL AND FOOTING REINFORCEMENTS ARE CONTINUOUS THROUGH COLUMN AND COLUMN FOOTING
2. AT DISCONTINUOUS STEM WALL BARS TERMINATE WITH STANDARD HOOK IN COLUMN. FOOTING BARS TERMINATE WITH 600 MM EMBEDMENT IN COLUMN FOOTING.
3. REFER TO CIVIL DWGS FOR ACTUAL FINISH FLOOR ELEVATIONS.

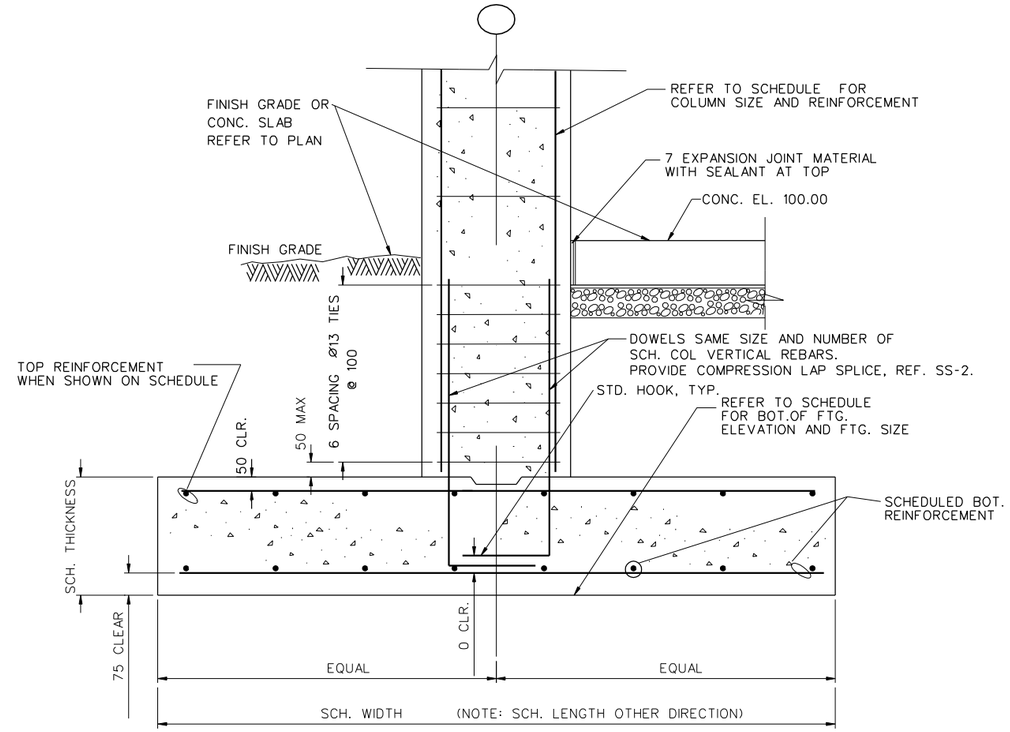

TYPICAL COLUMN FOOTING

DETAIL A / S-2 S-2
SCALE=N.T.S.

UNLESS OTHERWISE NOTED, LINEAR DIMENSIONS SHOWN ARE IN MILLIMETERS.

SYMBOL	DESCRIPTION	DATE	APP.

DESIGNED BY: RG
DATE: 02-05-07
DWN BY: TCP
SUBMITTED BY: PHILIP L. DINELLO, CHIEF, POST FACILITIES DEV.
CHK BY: KGO
FILE NO.: AF0701 F-SB02DT

US Army Corps of Engineers
Transatlantic Programs Center

AFGHAN NATIONAL POLICE HEADQUARTERS (2 STORY) COMPOUND
AFGHANISTAN
GUARD SHACK
FOOTING DETAILS

SHEET REFERENCE NUMBER:
F
S-2

3/9/2007
h:\projects\afghanistan\af0701\af0701\str\AR0701F-SB02DT.dwg

COLUMN SCHEDULE

NOTES: 1. REFER TO DETAILS B&C/S-3 AND A/S-2 FOR TYPICAL COLUMN DETAILS.

COLUMN GRIDS	COLUMN TYPE	CONCRETE DIMENSIONS		VERTICAL REINFORCEMENT	TIE REINFORCEMENT	
		WIDTH	DEPTH		SIZE	SPACING
A-1, A-2 B-1, B-2	C1	400	400	8-Ø 29	Ø13	300

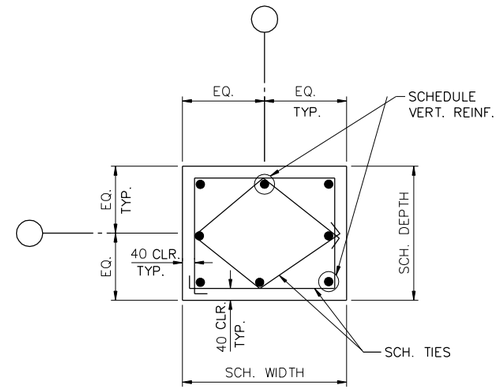

C1

COLUMN TYPE

DETAIL
SCALE = N.T.S.
A S-3 S-3

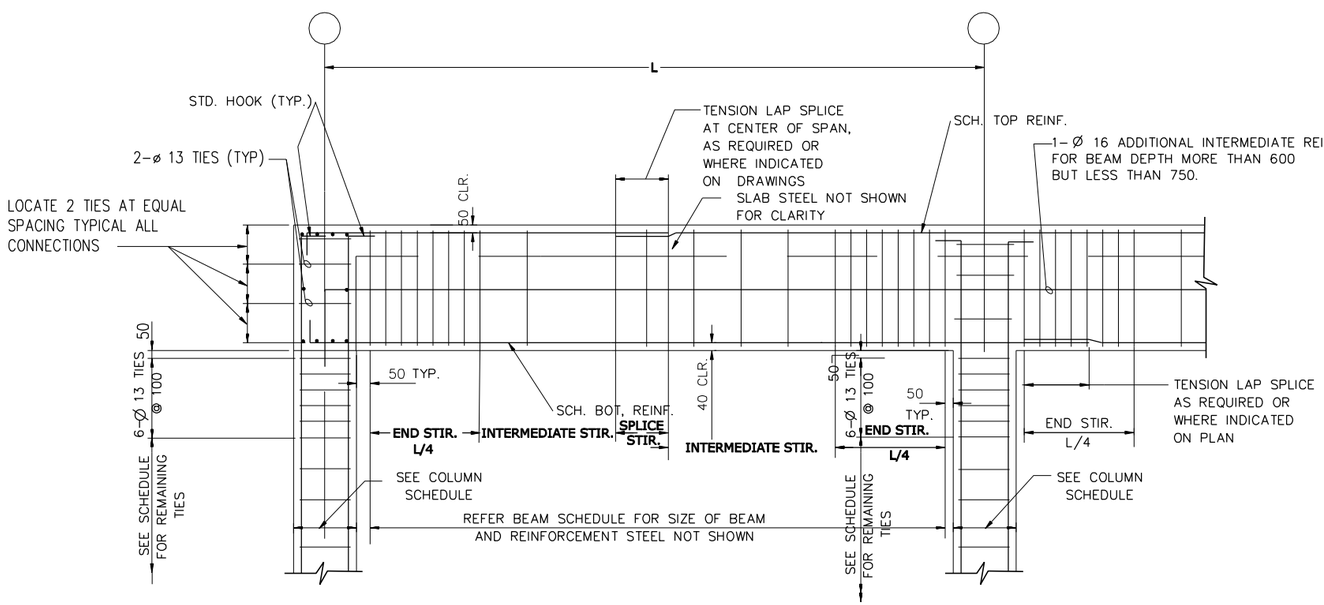

TYPICAL BEAM TO COLUMN END CONNECTION

DETAIL
SCALE = N.T.S.
B S-3 S-3

TYPICAL BEAM TO COLUMN INTERIOR CONNECTION

DETAIL
SCALE = N.T.S.
C S-3 S-3

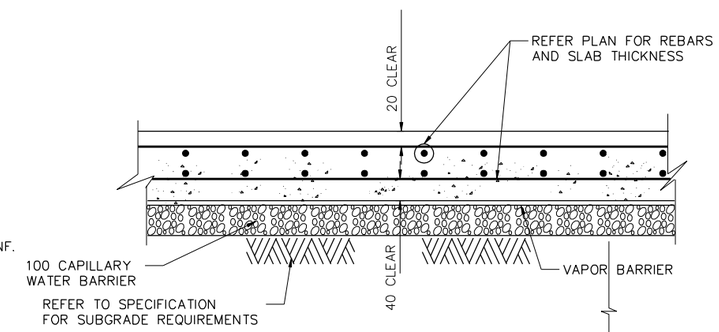

SLAB-ON-GRADE WITH TOP & BOTTOM REINFORCEMENTS

DETAIL
SCALE = N.T.S.
D S-3 S-3

UNLESS OTHERWISE NOTED, LINEAR DIMENSIONS SHOWN ARE IN MILLIMETERS.

SYMBOL	DESCRIPTION	DATE	APP.

DESIGNED BY: RG
DATE: 02-05-07
DWN BY: TCP
SUBMITTED BY: PHILIP L. DINELLO, CHIEF, POST FACILITIES DEV.
CHK BY: KGO
FILE NO.: AF0701 F-SB03DT

US Army Corps of Engineers
Transatlantic Programs Center

AFGHAN NATIONAL POLICE HEADQUARTERS (2 STORY) COMPOUND
AFGHANISTAN
GUARD SHACK
SLAB-ON-GRADE DETAILS

SHEET REFERENCE NUMBER:
F
S-3

3/9/2007
h:\projects\afghanistan\af0701\af0701\str\AR0701F-SF03DT.dwg

BEAM SCHEDULE

MARK	CONCRETE DIMENSIONS		FLEXURAL REINFORCEMENT		STIRRUP REINFORCEMENT				REMARKS
					SIZE	TYPE	SPACING		
	WIDTH	DEPTH	TOP	BOTTOM			ENDS & SPLICE	INTERMEDIATE	
RB1	400	700	4-Ø 22	4-Ø 22	Ø13		160	320	

NOTE: REFER TO DETAILS B&C/S-3 FOR TYPICAL BEAM ELEVATIONS AND SECTION 1/S-4 FOR TYPICAL BEAM SECTION.

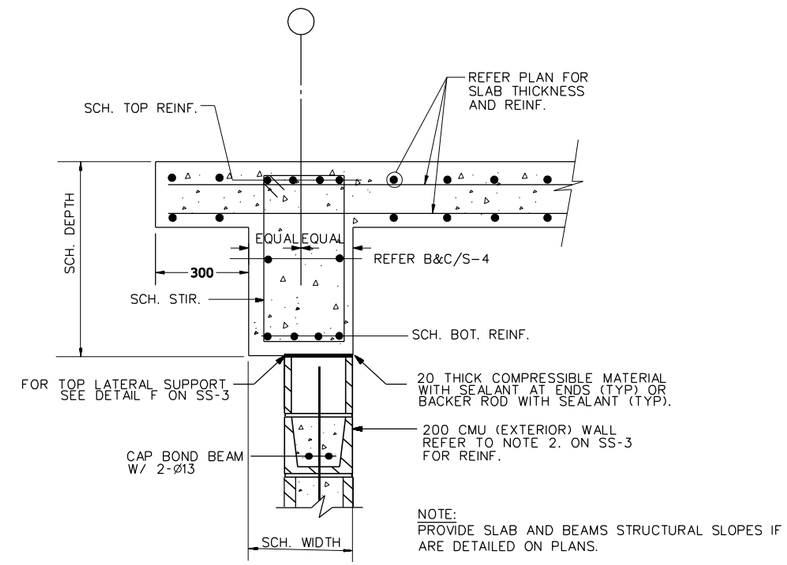

NOTE:
PROVIDE SLAB AND BEAMS STRUCTURAL SLOPES IF ARE DETAILED ON PLANS.

SECTION 1 S-1 S-4
SCALE = N.T.S.

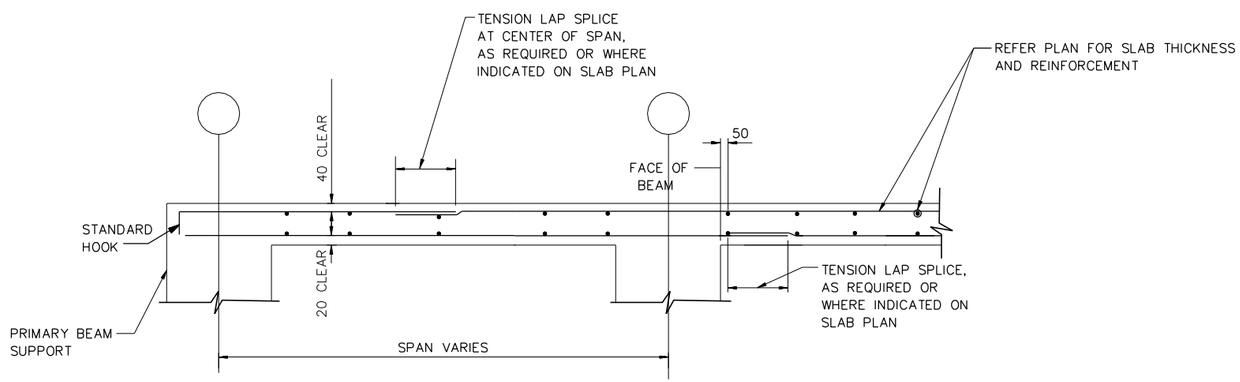

STRUCTURAL SLAB WITH TOP & BOTTOM REINFORCEMENTS

TYPICAL SECTIONS FOR STRUCTURAL SLABS A S-4 S-4
SCALE = N.T.S.

NOTE:

1. PROVIDE SIMILAR REINFORCEMENT PATTERNS FOR REINFORCEMENT RUNNING PERPENDICULAR TO SECTIONS.
2. PROVIDE SLAB AND BEAMS STRUCTURAL SLOPES IF ARE DETAILED ON PLANS.

UNLESS OTHERWISE NOTED, LINEAR DIMENSIONS SHOWN ARE IN MILLIMETERS.

SYMBOL	DESCRIPTION	DATE	APP

DESIGNED BY: RG
DATE: 02-05-07
DWN BY: TCP
SUBMITTED BY: PHILIP L. DINELLO CHIEF, POST FACILITIES DEV
CHK BY: KGO
FILE NO.: AF0701 F-SF04DT

US Army Corps of Engineers
Transatlantic Programs Center

AFGHAN NATIONAL POLICE HEADQUARTERS (2 STORY) COMPOUND
AFGHANISTAN
GUARD SHACK
ROOF BEAM AND STRUCTURAL SLAB DETAILS

SHEET REFERENCE NUMBER:
F
S-4

3/9/2007
h:\projects\afghanistan\af0701\af0701\str\AR0701F-SF04DT.dwg

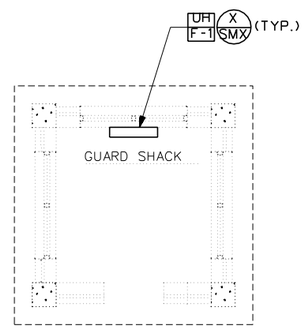

HVAC PLAN
SCALE- 1: 50

1 0 1 2 3 4
1:50

UNLESS OTHERWISE NOTED, LINEAR DIMENSIONS SHOWN ARE IN MILLIMETERS.

SYMBOL	DESCRIPTION	DATE	APP

DESIGNED BY: RMS
DATE: 02-05-07
DWN BY: RMS
SUBMITTED BY: SYED EMAYATULLA, CHIEF, PDU BLDG SYSTEMS
CHK BY: SE
FILE NO.: AF0701 F-MH01PN

US Army Corps of Engineers
Transatlantic Programs Center

AFGHAN NATIONAL POLICE HEADQUARTERS (2 STORY) COMPOUND
AFGHANISTAN
GUARD SHACK
HVAC PLAN

SHEET REFERENCE NUMBER:
F
M-1

3/9/2007
h:\projects\afghanistan\af0701\af0701\mec\AF0701F-MH01PN.DWG

NOTES:
1. FOR LEGEND AND ABBREVIATIONS SEE DRAWING SE-1.

2. EMERGENCY LIGHT SHALL BE CONNECTED AHEAD OF LIGHT SWITCH.

3. FOR LIGHT FIXTURE SCHEDULE SEE DRAWING SE-1.

4. COORDINATE LOCATION OF ALL ELECTRICAL FIXTURES AND MECHANICAL EQUIPMENT WITH ALL OTHER TRADES.

5. ALL WIRING SHALL BE CONCEALED OR SURFACE MOUNTED IN METAL CONDUIT.

6. PLAN IS TYPICAL FOR GUARD SHACK #1 AND #2. GUARD SHACK #1 SECONDARY SERVICE IS SUPPLIED FROM PANEL LOAD CENTER "D" (LC "D") LOCATED IN THE GUARD HOUSE (GH). GUARD SHACK #2 SECONDARY SERVICE IS SUPPLIED FROM PPSB.

7. SEE DRAWING XE-1 FOR LOCATION OF GUARD SHACKS.

8. FOR GROUNDING ROD ACCESS BOX SEE SHEET SE-3.

9. FOR SECONDARY DISTRIBUTION SEE DRAWINGS XE-1 AND XE-2.

10. PROVIDE 25MM EMPTY PVC CONDUIT WITH PULL WIRE TO A COMMUNICATION HAND HOLE LOCATED 1 METER OUTSIDE OF THE BUILDING. COORDINATE THE EXACT LOCATION OF THE HAND HOLE WITH THE CONTRACTING OFFICER. HAND HOLE SHALL BE PROVIDED WITH COVER.

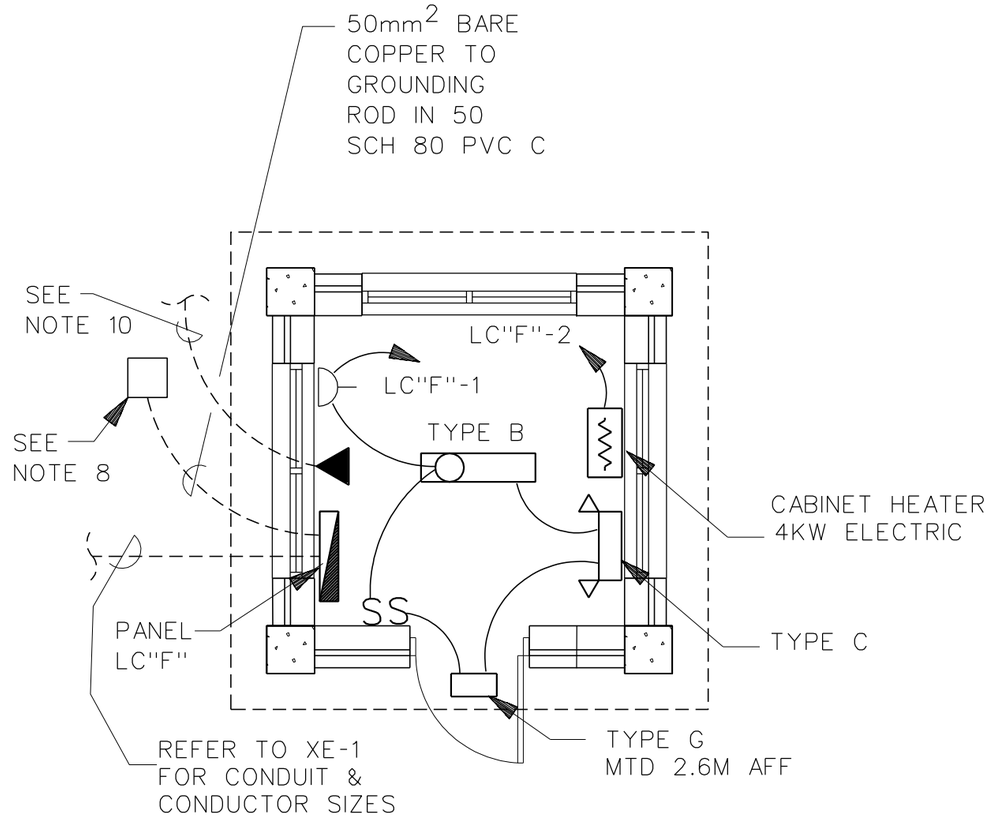

LIGHTING & POWER
SCALE: 1:25

LOAD CENTER "F" GUARD SHACK #1 & #2 (SEE NOTE 6)

40 AMP MAIN CIRCUIT BREAKER, 220V, 1 PH, 2W, 50 HZ, 100A BUS, 10000 AIC

CKT. NO.	TRIP AMPS	NO. POLES	WIRE MM2	GND MM2	CONDUIT MM	LOAD SERVED	LOAD-V.A.
1	20	1	4	4	20	LIGHTING& RECEP.GUARD SHACK#2	400
2	30	1	4	4	20	ELECT.HEAT GUARD SHACK#2	4000
3	20	1				SPARE	500
4	20	1				SPARE	500
5						SPACE	
6						SPACE	
7						SPACE	
8						SPACE	
						TOTAL CONN. LOAD	5400

TOTAL CONN. LOAD 5.4 KVA.
80 %DEMAND = EST. DEMAND LOAD: 4.3 SERVED FROM: PPSB

1 .50 0 1 1.5
1:25

UNLESS OTHERWISE NOTED, LINEAR DIMENSIONS SHOWN ARE IN MILLIMETERS.

SYMBOL	DESCRIPTION	DATE	APP

DESIGNED BY: MM
DATE: 02-05-07
DWN BY: MM
SUBMITTED BY: SYED ENAYATULLA CHIEF, PDU BLDG SYSTEMS
CHK BY: SE
FILE NO.: AF0701 F-ELOIPN

US Army Corps of Engineers
Transatlantic Programs Center

AFGHAN NATIONAL POLICE HEADQUARTERS (2 STORY) COMPOUND
AFGHANISTAN
GUARD SHACK
LIGHTING & POWER PLAN

SHEET REFERENCE NUMBER:
F
E-1

3/9/2007
h:\projects\afghanistan\af0701\af0701\ele\AF0701F-ELOIPN.dwg

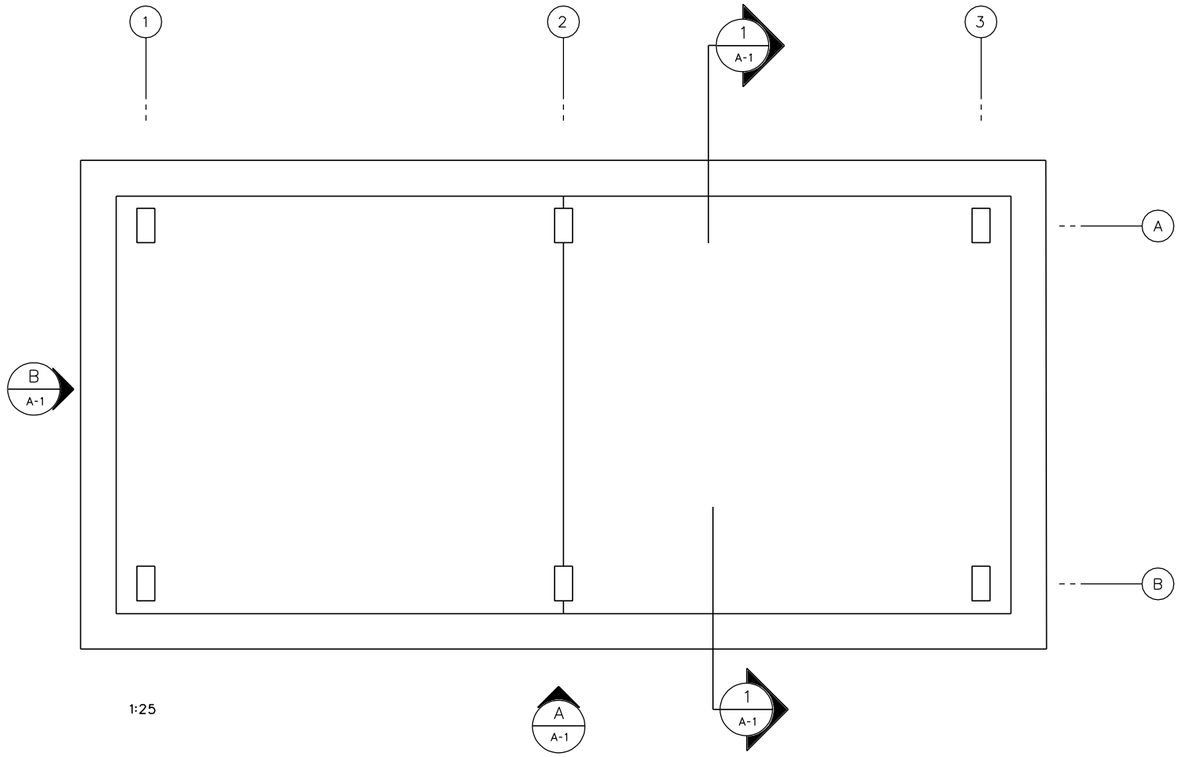

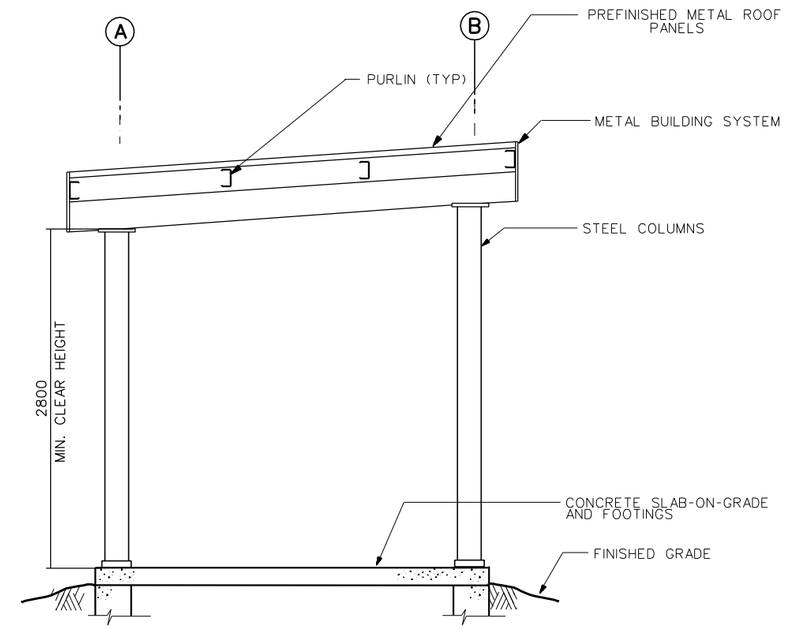

SECTION 1 (A-1 | A-1)
SCALE 1:25

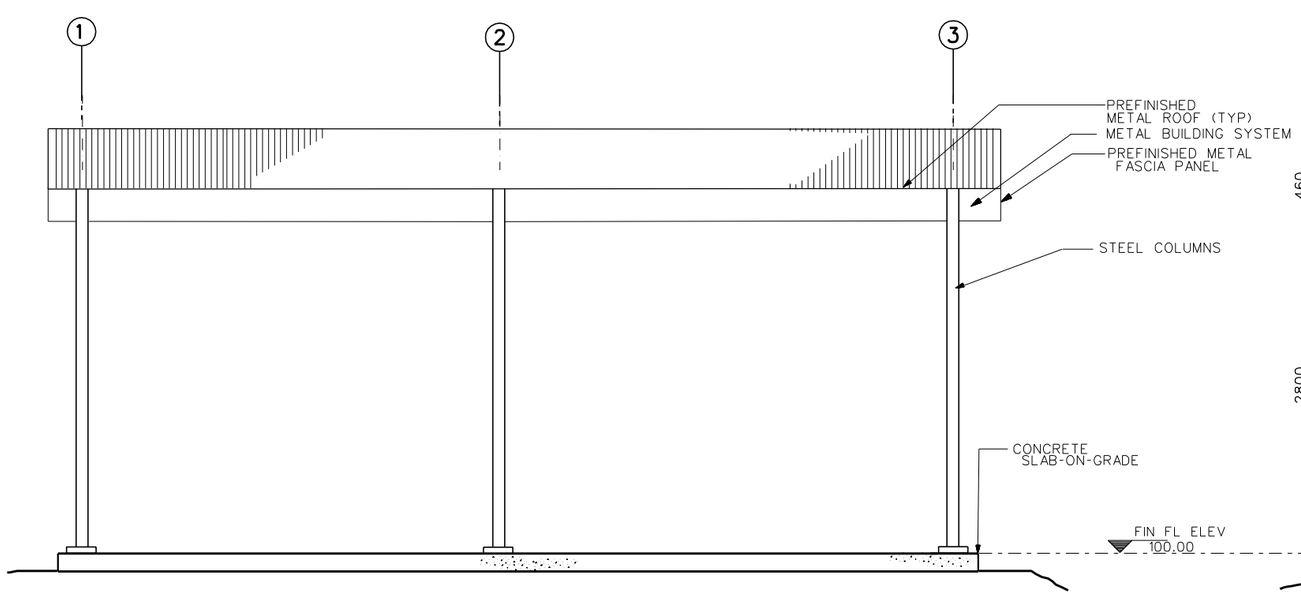

ELEVATION A (A-1 | A-1)
SCALE 1:25

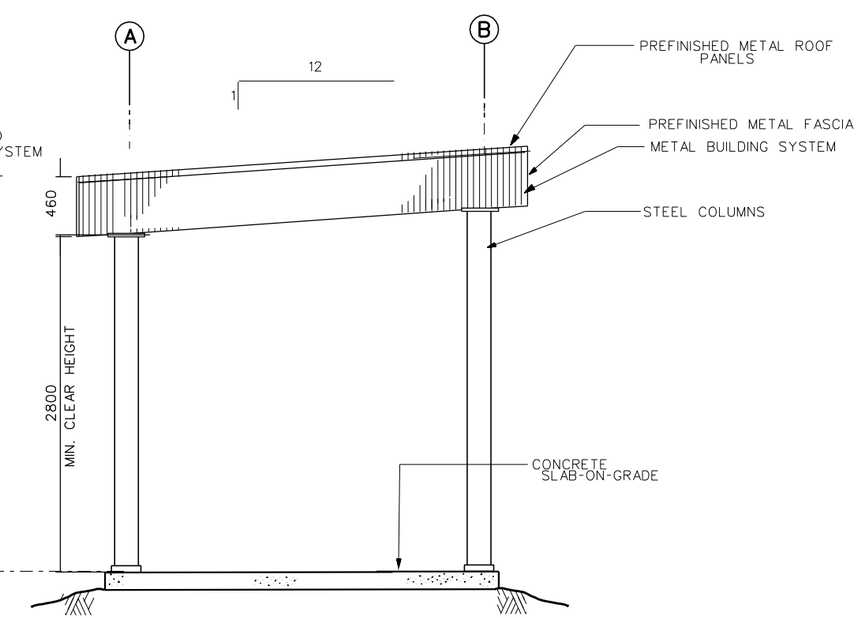

ELEVATION B (A-1 | A-1)
SCALE 1:25

GENERAL NOTES:

1. SEE CIVIL DRAWINGS FOR BUILDING LOCATION AND ACTUAL FINISH FLOOR ELEVATION.

1 .50 0 1 1.5
1:25

UNLESS OTHERWISE NOTED, LINEAR DIMENSIONS SHOWN ARE IN MILLIMETERS.

(SEE CIVIL DRAWINGS FOR EXACT LOCATION OF NORTH ARROW)

SYMBOL	DESCRIPTION	DATE	APP

DESIGNED BY: S. Hanna
DATE: 02-05-07
DWN BY: S. Hanna
SUBMITTED BY: PHILLIP L. DINELLO, CHIEF, POST FACILITIES DEV.
CHK BY: CHECK_BY
FILE NO.: AF0701 G-ARCIPN

US Army Corps of Engineers
Transatlantic Programs Center

AFGHAN NATIONAL POLICE HEADQUARTERS (2 STORY) COMPOUND
AFGHANISTAN
SUNSHADE
FLOOR PLAN AND BUILDING ELEVATIONS

SHEET REFERENCE NUMBER:
G
A-1

3/9/2007
h:\projects\afghanistan\af0701\af0701a\arc\af0701a-arc01pn.dwg

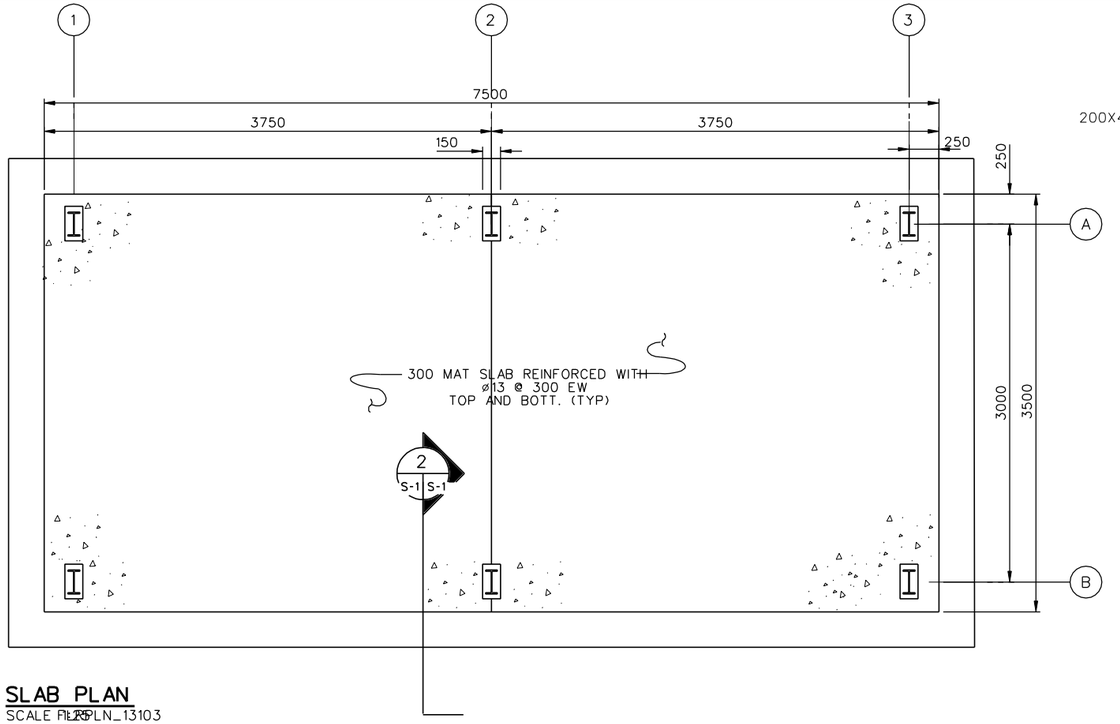

SLAB PLAN

SCALE FILE: PLN_13103

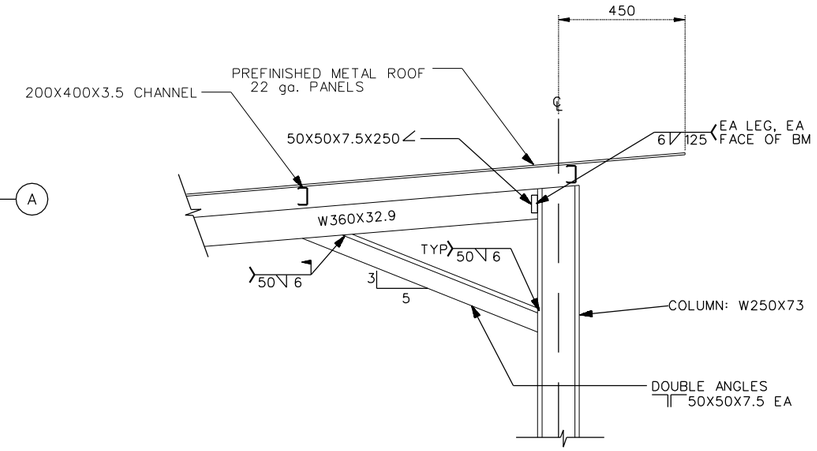

CANOPY

NOT TO SCALE

SECTION 1 S-1 S-1

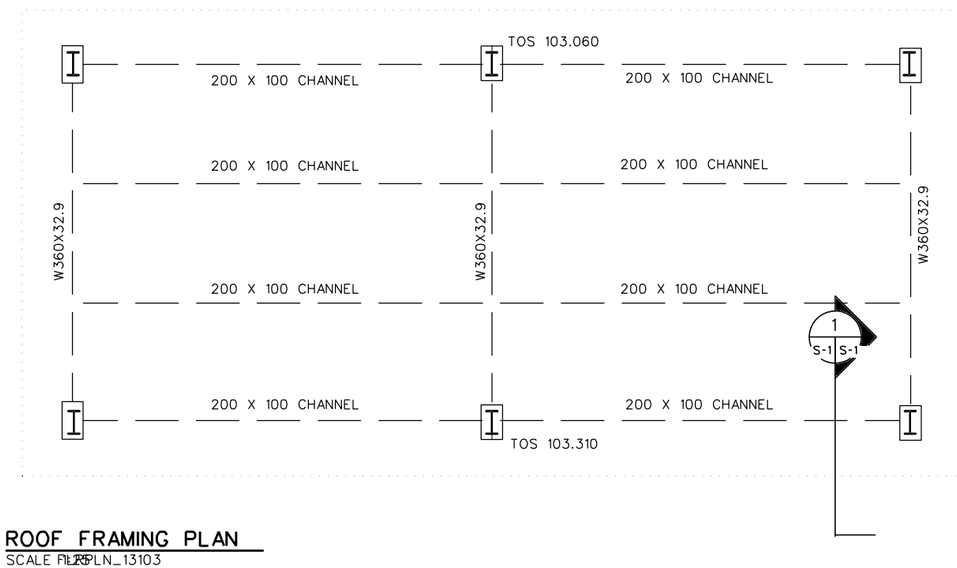

ROOF FRAMING PLAN

SCALE FILE: PLN_13103

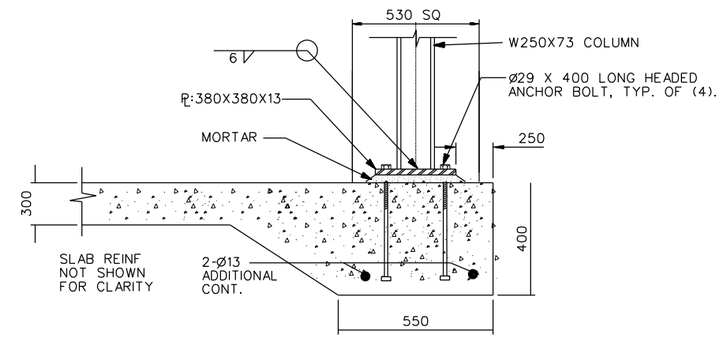

CANOPY COLUMN BASE

NOT TO SCALE

SECTION 2 S-1 S-1

UNLESS OTHERWISE NOTED, LINEAR DIMENSIONS SHOWN ARE IN MILLIMETERS.

SYMBOL	DESCRIPTION	DATE	APP

DESIGNED BY: TCP
DATE: 02-05-07
DWN BY: TCP
SUBMITTED BY: PHILIP L. DINELLO, CHIEF, POST FACILITIES DEV.
CHK BY: KGO
FILE NO.: AF0701 G-S801PN

US Army Corps of Engineers
Transatlantic Programs Center

AFGHAN NATIONAL POLICE HEADQUARTERS (2 STORY) COMPOUND
AFGHANISTAN
SUNSHADE
STRUCTURAL PLAN AND DETAILS

SHEET REFERENCE NUMBER:
G
S-1

3/9/2007
h:\projects\afghanistan\af0701\af0701\str\AF0701G-S801PN.dwg

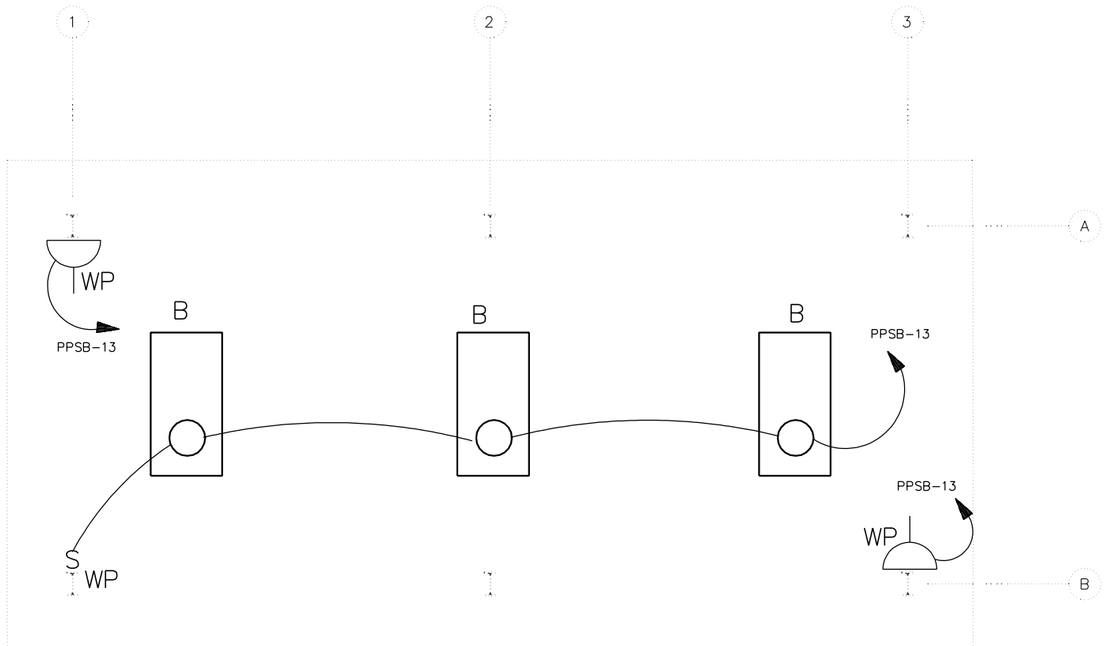

LIGHTING AND POWER PLAN
SCALE- 1: 25

NOTES:

1. FOR LEGEND AND ABBREVIATIONS SEE DRAWING SE-1.
2. FOR LIGHT FIXTURE SCHEDULE SEE DRAWING SE-1.
3. FOR ONE LINE DIAGRAM SEE DRAWING XE- I, POWER PLANT.
4. ALL WIRING SHALL BE SURFACE MOUNTED IN METAL CONDUIT.
5. LIGHT SWITCH AND RECEPTACLES SHALL BE MOUNTED ON THE COLUMN OF THE SUNSHADE 1.2 M ABOVE FINISHED FLOOR.
6. LIGHT SWITCH AND RECEPTACLES FOR THE SUNSHADE SHALL BE WEATHERPROOF TYPE.

1 .50 0 1 1.5
1:25

UNLESS OTHERWISE NOTED, LINEAR DIMENSIONS SHOWN ARE IN MILLIMETERS.

SYMBOL	DESCRIPTION	DATE	APP

DESIGNED BY: MM
DATE: 02-05-07
DWN. BY: MM
SUBMITTED BY: SYED EMAYATULLA CHIEF, PDU BLDG SYSTEMS
CHK BY: SE
FILE NO.: AF0701 G-ELOIPN

US Army Corps of Engineers
Transatlantic Programs Center

AFGHAN NATIONAL POLICE HEADQUARTERS (2 STORY) COMPOUND
AFGHANISTAN
SUNSHADE

LIGHTING AND POWER PLAN

SHEET REFERENCE NUMBER:
G
E-1

3/9/2007
h:\projects\afghanistan\af0701\af0701\ele\AF0701G-ELOIPN.DWG

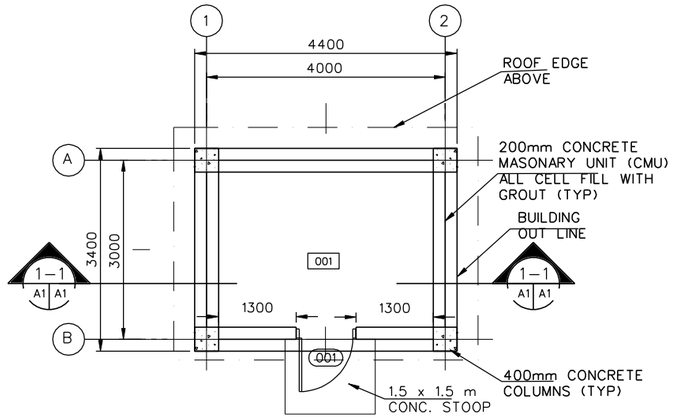

FLOOR PLAN
SCALE• 1 : 50

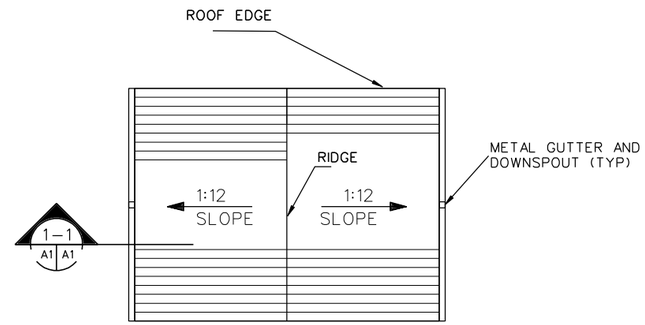

ROOF PLAN
SCALE• 1:50

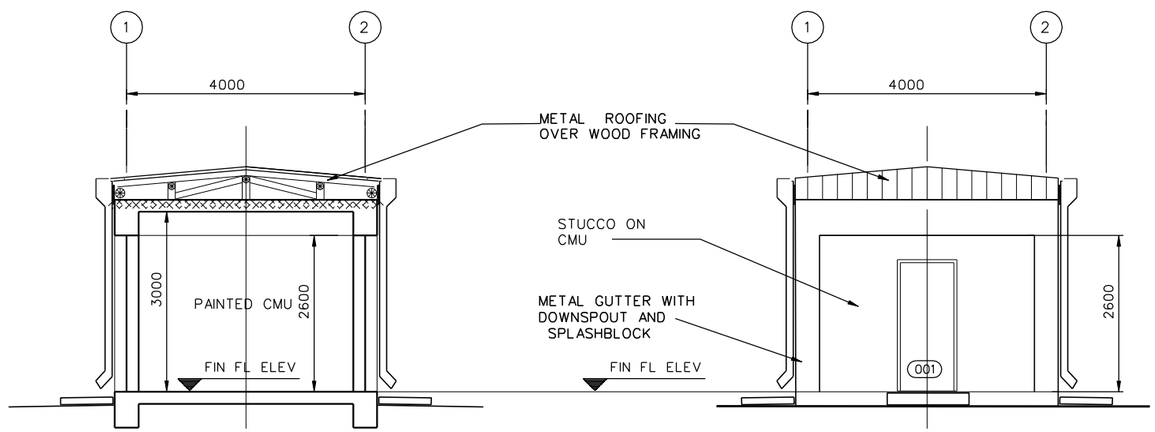

BUILDING SECTION
SCALE• 1 = 100

ELEVATION
SCALE• 1: 50

ROOM FINISH SCHEDULE

ROOM NO.	ROOM NAME	FLOOR		BASE		WALLS		CEILING			REMARKS
		MAT'L.	COLOR	MAT'L.	COLOR	MAT'L.	COLOR	MAT'L.	COLOR	HEIGHT	
001	WELL HOUSE ROOM	F1	1	--	--	W1	20	C1	30	3400	

DOOR SCHEDULE

DOOR							FRAME				FIRE LABEL	HDW SET	REMARKS
NO.	LOCATION	TYPE	MAT'L	WIDTH	HEIGHT	THICK	HEAD	JAMB	SILL	MAT'L			
001	WELL HOUSE ROOM	F	HM	900	2150	45	H-1/SA2	J-1/SA2	S-1/SA2	HM	--	6	

ROOM FINISH SCHEDULE LEGEND

FLOOR TYPE
F1 SEALED CONCRETE

FLOOR COLOR
1 SEALED CONCRETE - NATURAL FINISH

WALL TYPE
W1 PAINTED CMU

WALL COLOR
20 PAINTED CMU -HEMPEL, 1005-Y50R-25400,

CEILING TYPE
C1 PAINTED EXPOSED STRUCTURE

CEILING COLOR
30 PAINTED EXPOSED STRUCTURE - HEMPEL, 0502-Y-15420, OFF WHITE

ROOM FINISH SCHEDULE NOTES:

1. ALL WALL PENETRATIONS SHALL BE SEALED TO PROVIDE A NEAT APPEARANCE. PENETRATIONS OF EXTERIOR WALLS SHALL BE SEALED TO BE WATER-TIGHT.
2. SEALANTS SHALL MATCH THE COLOR OF ADJACENT SURFACES.

1:50

SYMBOL	DESCRIPTION	DATE	APP

DESIGNED BY: S. Hanna
DATE: 02-05-07
DWN BY: S. Hanna
SUBMITTED BY: PHILIP L. DINELLO, CHIEF, POST FACILITIES DEV.
CHK BY:
FILE NO.: AF0701 H-AR01PN

US Army Corps of Engineers
Transatlantic Programs Center

AFGHAN NATIONAL POLICE HEADQUARTERS (2 STORY) COMPOUND
AFGHANISTAN
WELL HOUSE BUILDING
FLOOR PLAN/ELEVATION/SCHEDULE

SHEET REFERENCE NUMBER:
H
A-1

3/9/2007
h:\projects\afghanistan\af0701\af0701h\arc\af0701h-ar01p.dwg

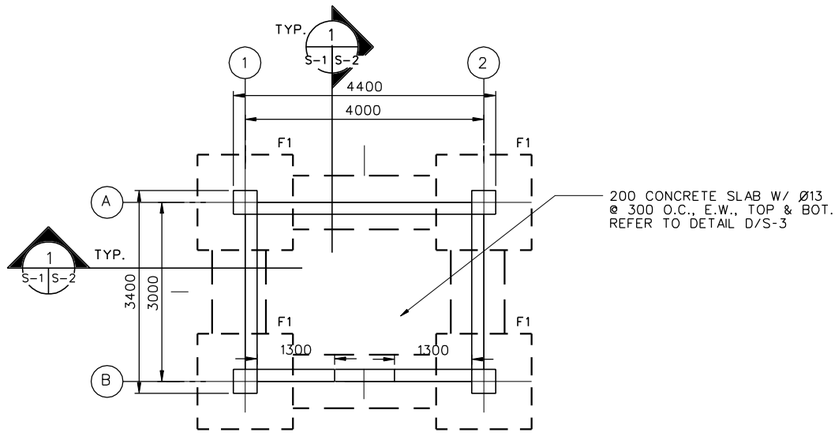

FOUNDATION AND SLAB PLAN
SCALE=1:50

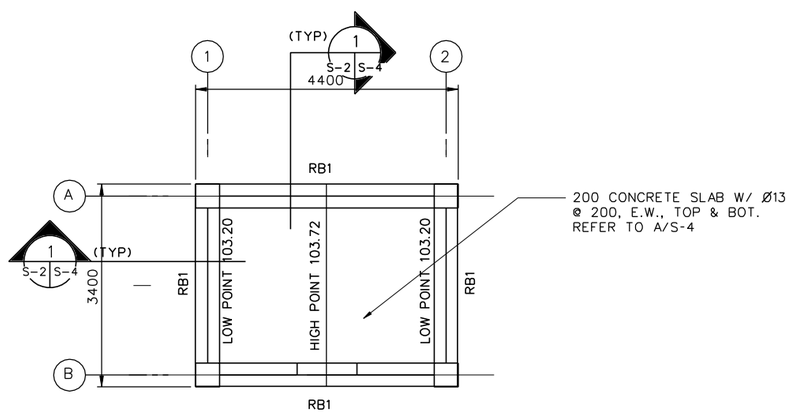

ROOF FRAMING PLAN
SCALE=1:50

1. DESIGN LOADS (SERVICE)

LIVE LOADS:

ROOF: 1.0 KPA (20 PSF)
OTHERS: 4.8 KPA (100 PSF)
8.9 KN (2.0 K) CONCENTRATED LOAD

WIND LOADS PER IBC-2003

USING A "3-SECOND" WIND VELOCITY OF 125 KPH (78 MPH), EXPOSURE C AND IMPORTANCE FACTOR I=1.0

EARTHQUAKE LOADS PER IBC-2003:

USING A SEISMICITY: Ss=1.65g AND S_1=0.75g

2. MATERIALS:

CONCRETE: 28 MPa (4 KSI)
CYLINDER STRENGTH AT 28 DAYS

REINFORCING: ASTM A615 GRADE 60 (60 KSI)

3. WORK THESE STRUCTURAL DRAWINGS WITH THE STANDARD-DETAILS DRAWINGS.

4. A RELATIVE (DATUM) FINISH FLOOR ELEVATION EQUAL TO 100.00 M. IS USED AS REFERENCE ELEVATION FOR ALL STRUCTURAL DRAWINGS. REFER TO CIVIL DRAWINGS FOR ACTUAL FINISH ELEVATIONS.

5. FOUNDATIONS ARE DESIGNED USING AN ALLOWABLE BEARING PRESSURE OF 0.75 KG/SQ. CM (1500 PSF), AND BOTTOM OF FOOTINGS ARE PLACED AS SHOWN ON DRAWINGS. GEOTECHNICAL INVESTIGATION SHALL CONFIRM BEARING CAPACITY TO BE NO LESS THAN 0.75 KG/SQ CM. IF GEOTECHNICAL INVESTIGATION SHOWS LESS THAN 0.75 KG/SQ CM THE CONTRACTOR SHALL REDESIGN FOOTINGS BASED ON THE GEOTECHNICAL INVESTIGATION. SEE SPECIFICAITON 01015 PARAGRAPH, GEOTECHNICAL, FOUNDATION AND SURVEY.

UNLESS OTHERWISE NOTED, LINEAR DIMENSIONS SHOWN ARE IN MILLIMETERS.

SYMBOL	DESCRIPTION	DATE	APP

DESIGNED BY: TCP
DATE: 02-05-07
DWN BY: TCP
SUBMITTED BY: PHILIP L. DINELLO, CHIEF, POST FACILITIES DEV.
CHK BY: KGO
FILE NO.: AF0701 H-SB01PN

US Army Corps of Engineers
Transatlantic Programs Center

AFGHAN NATIONAL POLICE HEADQUARTERS (2 STORY) COMPOUND
AFGHANISTAN
WELL HOUSE BUILDING
FOUNDATION PLAN AND ROOF PLAN

SHEET REFERENCE NUMBER:
H
S-1

3/9/2007
h:\projects\afghanistan\af0701\af0701\str\AF0701H-SB01PN.dwg

FOOTING SCHEDULE

NOTE:
REFER TO A/S-2 FOR TYPICAL SECTION OF FOOTINGS.

MARK	CONCRETE DIMENSIONS			REINFORCEMENT		FTG. BOTTOM EL. METERS	REMARKS
	WIDTH	LENGTH	THICKNESS	TOP	BOTTOM		
F1	1600	1600	300	——	5-Ø25 E.W.	98.5	

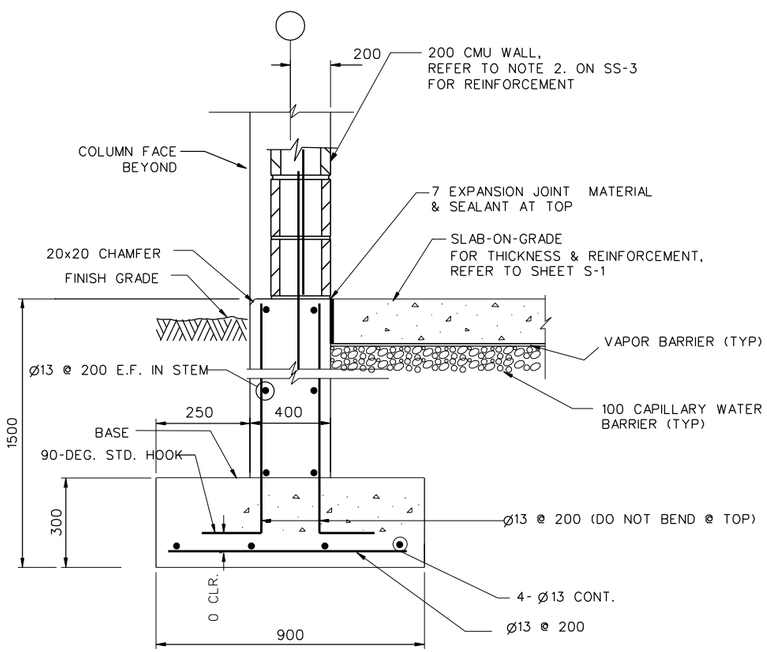

TYPICAL WALL FOOTING

SECTION 1 S-1 S-2
SCALE - N.T.S.

NOTES:
1. HORIZONTAL STEM WALL AND FOOTING REINFORCEMENTS ARE CONTINUOUS THROUGH COLUMN AND COLUMN FOOTING
2. AT DISCONTINUOUS STEM WALL BARS TERMINATE WITH STANDARD HOOK IN COLUMN. FOOTING BARS TERMINATE WITH 600 MM EMBEDMENT IN COLUMN FOOTING.
3. REFER TO CIVIL DWGS FOR ACTUAL FINISH FLOOR ELEVATIONS.

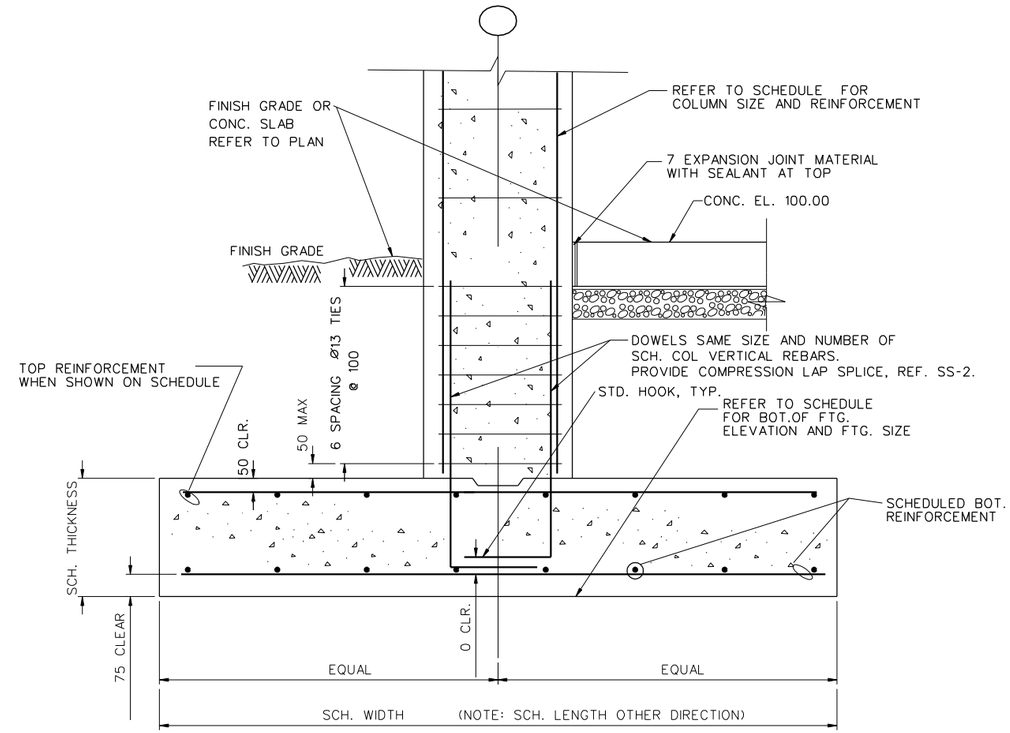

DETAIL A S-2 S-2
SCALE - N.T.S.

TYPICAL COLUMN FOOTING

UNLESS OTHERWISE NOTED, LINEAR DIMENSIONS SHOWN ARE IN MILLIMETERS.

SYMBOL	DESCRIPTION	DATE	APP.

DESIGNED BY: RG
DATE: 02-05-07
DWN BY: TCP
SUBMITTED BY: PHILIP L. DINELLO, CHIEF, PDT FACILITIES DEV.
CHK BY: KGO
FILE NO.: AF0701 H-SB02DT

US Army Corps of Engineers
Transatlantic Programs Center

AFGHAN NATIONAL POLICE HEADQUARTERS (2 STORY) COMPOUND
AFGHANISTAN
WELL HOUSE BUILDING
FOOTING DETAILS

SHEET REFERENCE NUMBER:
H
S-2

3/9/2007
h:\projects\afghanistan\af0701\af0701\str\af0701H-sb02dt.dwg

COLUMN SCHEDULE

NOTES: 1. REFER TO DETAILS B&C/S-3 AND A/S-2 FOR TYPICAL COLUMN DETAILS.

COLUMN GRIDS	COLUMN TYPE	CONCRETE DIMENSIONS		VERTICAL REINFORCEMENT	TIE REINFORCEMENT	
		WIDTH	DEPTH		SIZE	SPACING
A-1, A-2 B-1, B-2	C1	400	400	8-Ø 29	Ø13	300

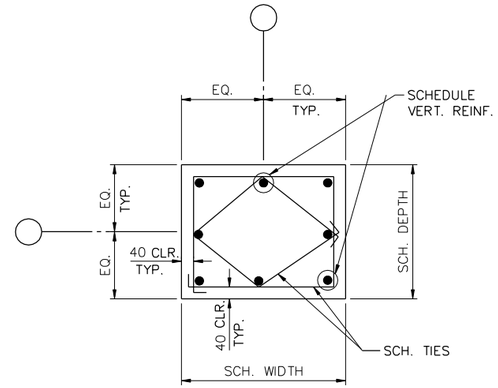

C1

COLUMN TYPE

DETAIL A S-3 | S-3
SCALE = N.T.S.

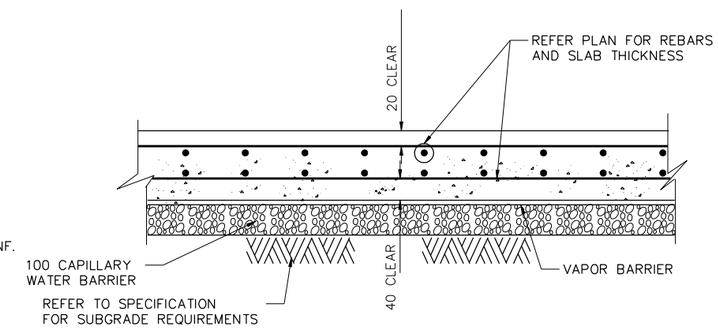

SLAB-ON-GRADE WITH TOP & BOTTOM REINFORCEMENTS

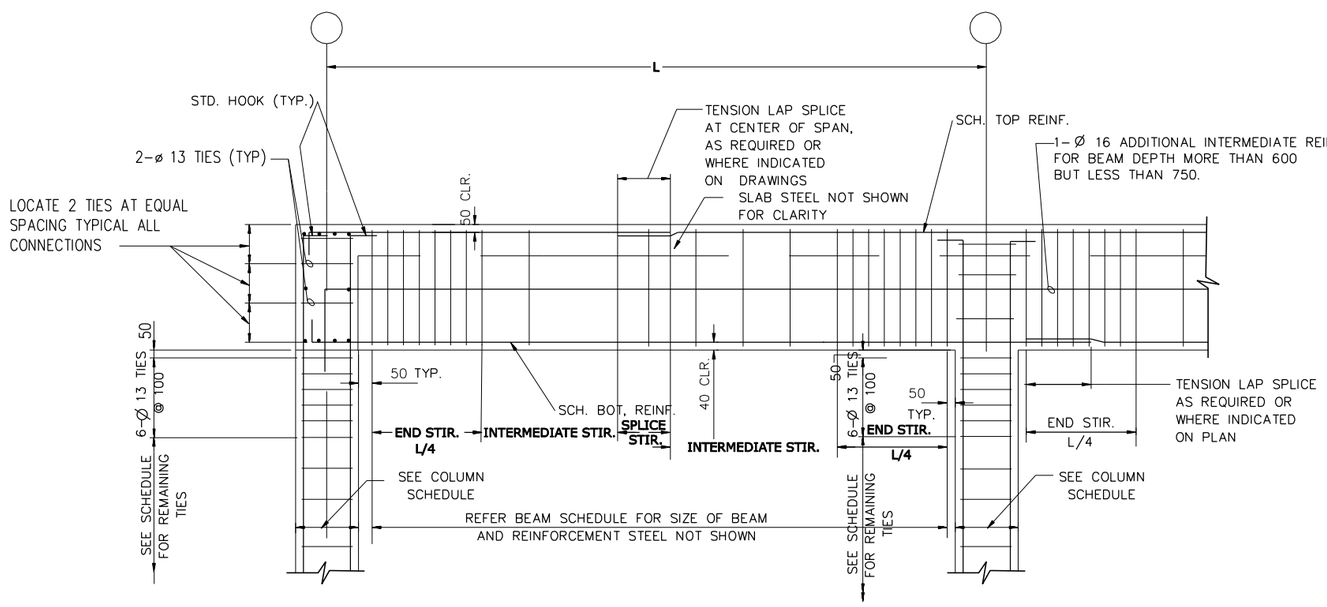

TYPICAL BEAM TO COLUMN END CONNECTION

DETAIL B S-3 | S-3
SCALE = N.T.S.

TYPICAL BEAM TO COLUMN INTERIOR CONNECTION

DETAIL C S-3 | S-3
SCALE = N.T.S.

UNLESS OTHERWISE NOTED, LINEAR DIMENSIONS SHOWN ARE IN MILLIMETERS.

SYMBOL	DESCRIPTION	DATE	APP.

DESIGNED BY: RG | DATE: 02-05-07
DWN BY: TCP | SUBMITTED BY: PHILIP L. DINELLO, CHIEF, POST FACILITIES DEV.
CHK BY: KGO | FILE NO.: AF0701 H-SF03DT

US Army Corps of Engineers
Transatlantic Programs Center

AFGHAN NATIONAL POLICE HEADQUARTERS (2 STORY) COMPOUND
AFGHANISTAN
WELL HOUSE BUILDING
SLAB-ON-GRADE DETAILS

SHEET REFERENCE NUMBER:
H
S-3

3/9/2007
h:\projects\afghanistan\af0701\af0701h\str\af0701h-sf03dt.dwg

BEAM SCHEDULE

MARK	CONCRETE DIMENSIONS		FLEXURAL REINFORCEMENT		STIRRUP REINFORCEMENT				REMARKS
					SIZE	TYPE	SPACING		
	WIDTH	DEPTH	TOP	BOTTOM			ENDS & SPLICE	INTERMEDIATE	
RB1	400	700	4-Ø 22	4-Ø 22	Ø13		160	320	

NOTE: REFER TO DETAILS B&C/S-3 FOR TYPICAL BEAM ELEVATIONS AND SECTION 1/S-4 FOR TYPICAL BEAM SECTION.

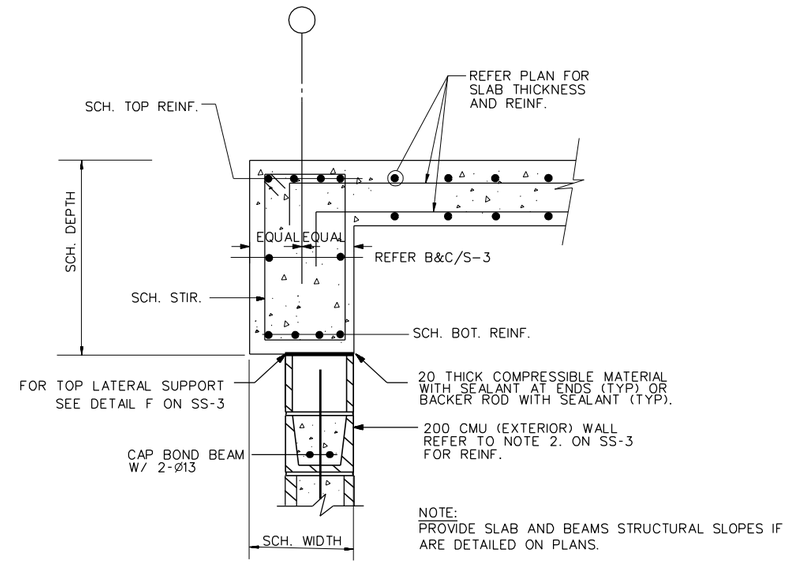

NOTE:
PROVIDE SLAB AND BEAMS STRUCTURAL SLOPES IF ARE DETAILED ON PLANS.

SECTION 1 (S-1 | S-4)
SCALE = N.T.S.

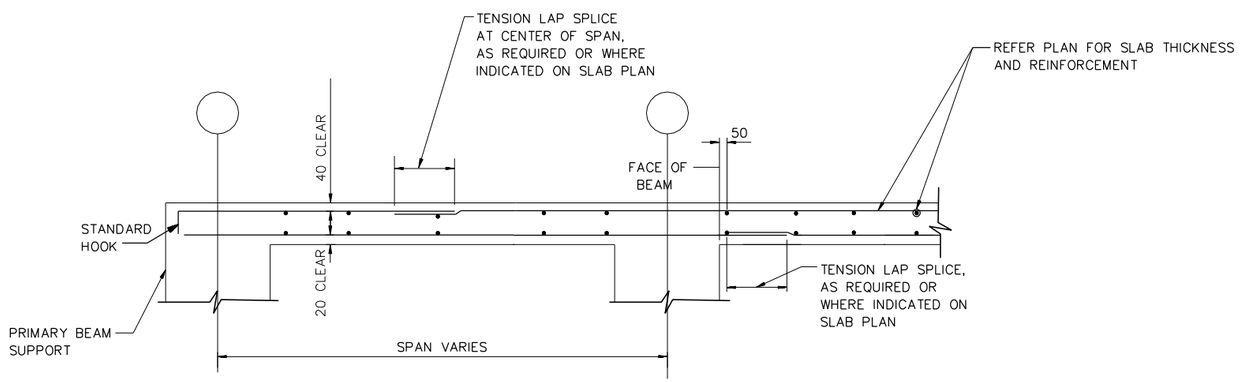

STRUCTURAL SLAB WITH TOP & BOTTOM REINFORCEMENTS

TYPICAL SECTIONS FOR STRUCTURAL SLABS (A | S-4 | S-4)
SCALE = N.T.S.

NOTE:

1. PROVIDE SIMILAR REINFORCEMENT PATTERNS FOR REINFORCEMENT RUNNING PERPENDICULAR TO SECTIONS.
2. PROVIDE SLAB AND BEAMS STRUCTURAL SLOPES IF ARE DETAILED ON PLANS.

UNLESS OTHERWISE NOTED, LINEAR DIMENSIONS SHOWN ARE IN MILLIMETERS.

SYMBOL	DESCRIPTION	DATE	APP

DESIGNED BY: RG
DATE: 02-05-07
DWN BY: TCP
SUBMITTED BY: PHILIP L. DINELLO, CHIEF, POST FACILITIES DEV.
CHK BY: KGO
FILE NO.: AF0701 H-SF04DT

US Army Corps of Engineers
Transatlantic Programs Center

AFGHAN NATIONAL POLICE HEADQUARTERS (2 STORY) COMPOUND
AFGHANISTAN
WELL HOUSE BUILDING
ROOF BEAM AND STRUCTURAL SLAB DETAILS

SHEET REFERENCE NUMBER:
H
S-4

3/9/2007
h:\projects\afghanistan\af0701\af0701h\str\af0701h-sf04t.dwg

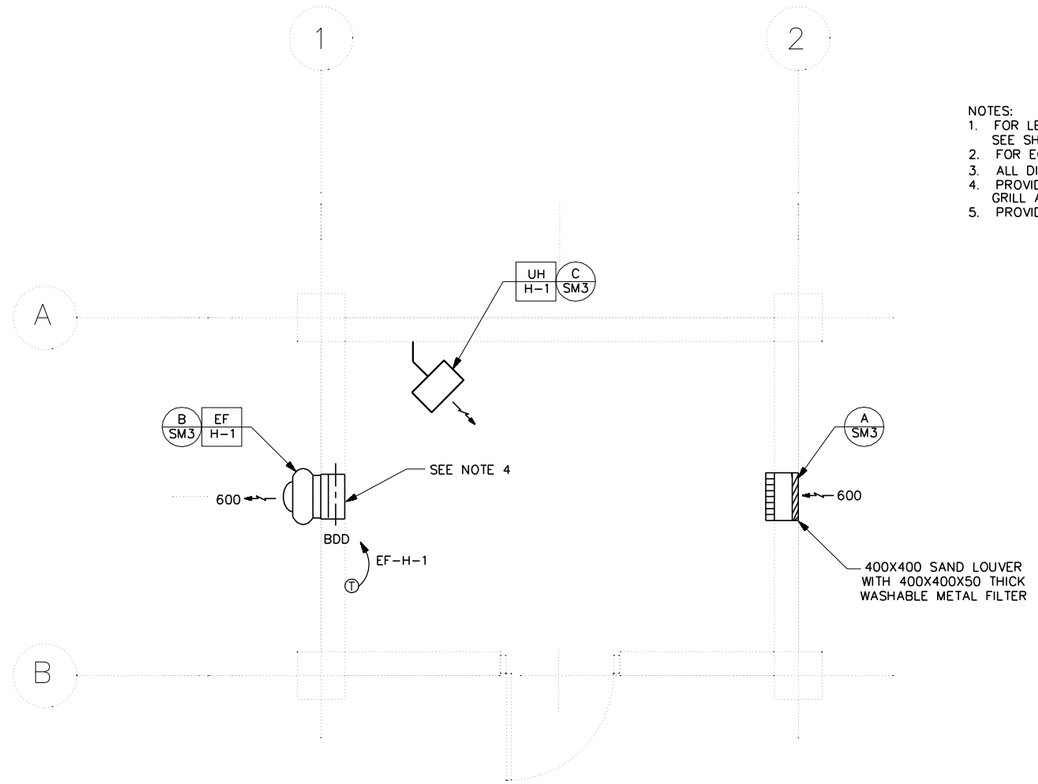

HVAC PLAN
SCALE- 1: 25

NOTES:
1. FOR LEGENDS, ABBREVIATIONS AND STANDARD MECHANICAL DETAILS SEE SHEETS SM-1 AND SM-3.
2. FOR EQUIPMENT SCHEDULES AND CONTROL DIAGRAMS SEE SHEET SM-2.
3. ALL DIMENSIONS ARE IN MM (IN) UNLESS NOTED OTHERWISE.
4. PROVIDE EACH EXHAUST FAN WITH MANUFACTURER'S STANDARD EXHAUST GRILL AND GRAVITY BACKDRAFT DAMPER.
5. PROVIDE 400x400 SAND LOUVER WITH 50MM THICK WASHABLE METAL FILTERS.

1 .50 0 1 1.5
1:25

UNLESS OTHERWISE NOTED, LINEAR DIMENSIONS SHOWN ARE IN MILLIMETERS.

SYMBOL	DESCRIPTION	DATE	APP

DESIGNED BY: RMS
DATE: 02-05-07
DWN BY: JMC
SUBMITTED BY: SYED EMAYATULLA CHIEF, PDU BLDG SYSTEMS
CHK BY: SE
FILE NO.: AF0701 H-MHOIPN

US Army Corps of Engineers
Transatlantic Programs Center

AFGHAN NATIONAL POLICE HEADQUARTERS (2 STORY) COMPOUND
AFGHANISTAN
WELL HOUSE BUILDING
HVAC PLAN

SHEET REFERENCE NUMBER:
H
M-1

3/9/2007
h:\projects\afghanistan\af0701\af0701h\mec\AF0701H-MHOIPN.DWG

NOTES:

1. FOR LEGEND AND ABBREVIATIONS SEE DRAWING SE-1.

2.COORDINATE LOCATION OF ALL ELECTRICAL FIXTURES AND EQUIPMENT WITH ALL OTHER TRADES.

3. FOR ONE LINE DIAGRAM SEE DRAWING XE- 2, POWER PLANT.

4. ALL WIRING SHALL BE SURFACE MOUNTED IN METAL CONDUIT.

5. FOR EXACT LOCATION OF MECHANICAL EQUIPMENT SEE MECHANICAL DRAWINGS.

6. DESIGN IS BASED ON A 5 HP PUMP. IT IS CONTRACTOR'S RESPONSIBILITY TO DESIGN AND PROVIDE PROPERLY SIZED PUMP AS REQUIRED BY THE CONTRACT DOCUMENTS.

7. CONTRACTOR SHALL CONFIRM THAT ALL CIRCUIT RATINGS ARE BASED ON THE ACTUAL NAMEPLATE OF THE SUPPLIED EQUIPMENT.

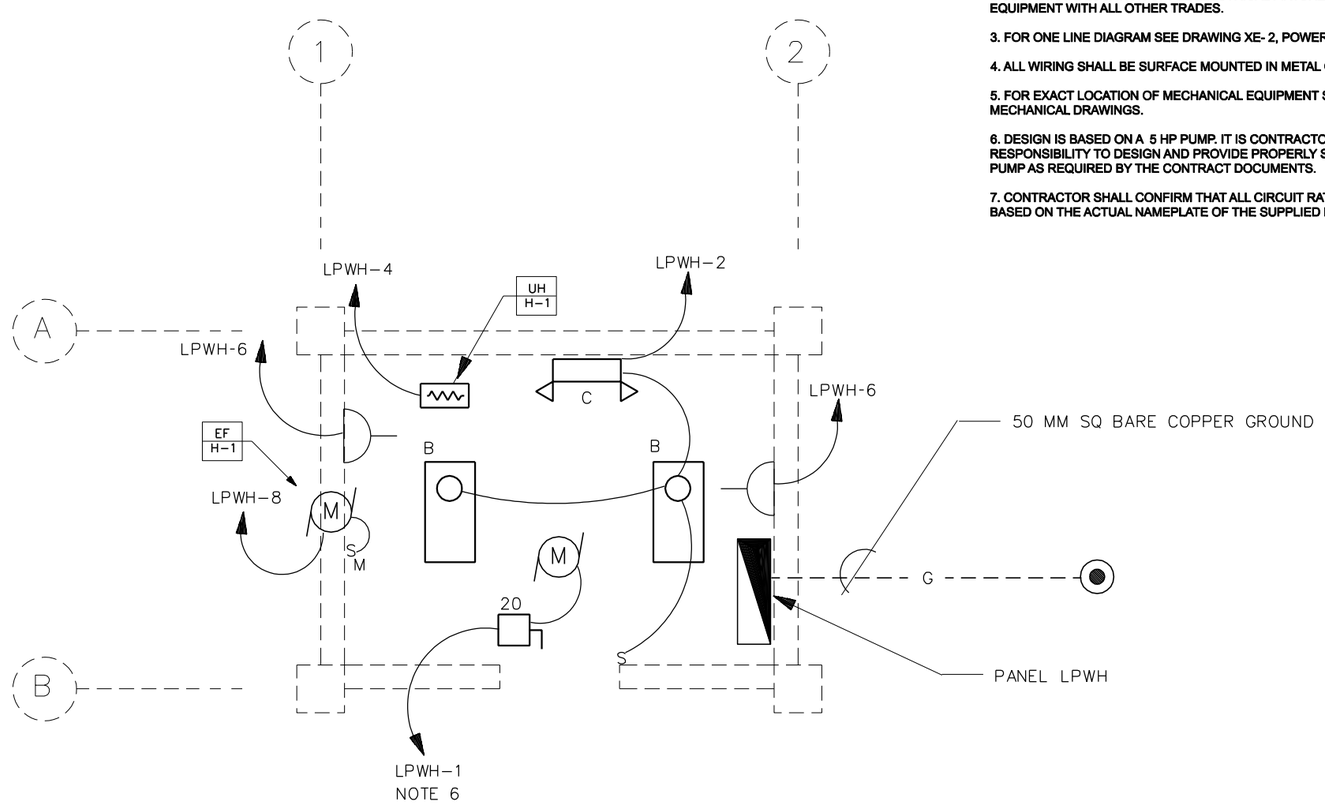

LIGHTING AND POWER PLAN

SCALE= 1:25

1 .50 0 1 1.5
1:25

UNLESS OTHERWISE NOTED, LINEAR DIMENSIONS SHOWN ARE IN MILLIMETERS.

SYMBOL	DESCRIPTION	DATE	APP

DESIGNED BY: MM
DATE: 02-05-07
DWN BY: MM
SUBMITTED BY: SYED EMAYATULLA CHIEF, PDU BLDG SYSTEMS
CHK BY: SE
FILE NO.: AF0701 H-ELOIPN

US Army Corps of Engineers
Transatlantic Programs Center

AFGHAN NATIONAL POLICE HEADQUARTERS (2 STORY) COMPOUND
AFGHANISTAN
WELL HOUSE BUILDING
LIGHTING AND POWER PLAN

SHEET REFERENCE NUMBER:
H
E-1

3/9/2007
h:\projects\afghanistan\af0701\af0701\ele\af0701h-eloipn.dwg

PANELBOARD LPWP SURFACE MOUNTED MINIMUM 14,000 ASYM. A.I.C. MIN.

_____ AMP. MAIN LUGS (OR) 60 AMP. MAIN BREAKER W/ 60 AMP. TRIP

CIRCUIT BREAKER TYPE 380/220 VOLTS 3 PHASE 4 WIRE 100 AMP. BUS

CKT. NO.	TRIP AMPS	NO. POLES	WIRE MM2	GND MM2	CONDUIT MM	LOAD SERVED	LOAD-V.A.			LOAD-V.A.			LOAD SERVED	CONDUIT MM	GND MM2	WIRE MM2	NO. POLES	TRIP AMPS	CKT. NO.
							AØ	BØ	CØ	AØ	BØ	CØ							
1	20	3	4	4	25	WELL PUMP	2016			150			LIGHTING	25	4	4	3	20	2
3								2016			3000		ELECTRIC HEAT						4
5									2016			360	RECEPTACLES						6
7	20	1	4	4	20	EF-H-1	250						SPARE				1	20	8
9	20	1				SPARE							SPARE				1	20	10
11	20	1				SPARE							SPACE						12
13						SPACE							SPACE						14
15						SPACE							SPACE						16
							2266	2016	2016	150	3000	360							

TOTAL CONN. LOAD 9.94 KVA 80 % DEMAND = ESTIMATED DEMAND LOAD: 7.95 KVA

TOTAL CONN. LOAD PER PHASE (KVA): AØ 2.41 BØ 5.16 CØ 2.37

SUPPLIED FROM POWER PLANT SWITCHBOARD(PPSB)

NOTES:

1. FOR LEGEND AND ABBREVIATIONS SEE DRAWING SE-1.
2. EMERGENCY LIGHT SHALL BE CONNECTED AHEAD OF LIGHT SWITCH.
3. FOR LIGHT FIXTURE SCHEDULE SEE DRAWING SE-1.
4. COORDINATE LOCATION OF ALL ELECTRICAL FIXTURES AND EQUIPMENT WITH ALL OTHER TRADES.
5. ALL WIRING SHALL BE IN CONCEALED OR SURFACE MOUNTED METAL CONDUIT.
6. REFER TO DRAWING XE-2 FOR CONDUIT AND CONDUCTOR SIZE.
7. CONTRACTOR SHALL CONFIRM THAT ALL CIRCUIT RATING IS BASED ON THE ACTUAL NAME PLATE OF THE SUPPLIED EQUIPMENT.

UNLESS OTHERWISE NOTED, LINEAR DIMENSIONS SHOWN ARE IN MILLIMETERS.

SYMBOL	DESCRIPTION	DATE	APP

DESIGNED BY: MM
DATE: 02-05-07
DWN. BY: MM
SUBMITTED BY: SYED EMAYATULLA CHIEF, PDT BLDG SYSTEMS
CHK BY: SE
FILE NO.: AF0701 H-EP02SC

US Army Corps of Engineers
Transatlantic Programs Center

AFGHAN NATIONAL POLICE HEADQUARTERS (2 STORY) COMPOUND
AFGHANISTAN
WELL HOUSE BUILDING
PANEL SCHEDULES

SHEET REFERENCE NUMBER:
H
E-2

3/9/2007
h:\projects\afghanistan\af0701\af0701h\ele\AF0701H-EP02SC.DWG

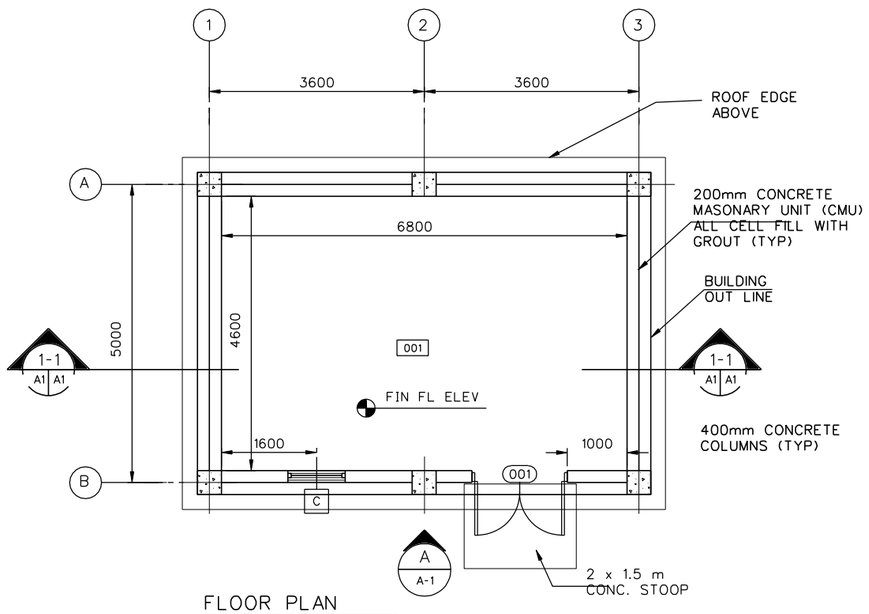

FLOOR PLAN
SCALE= 1 : 50

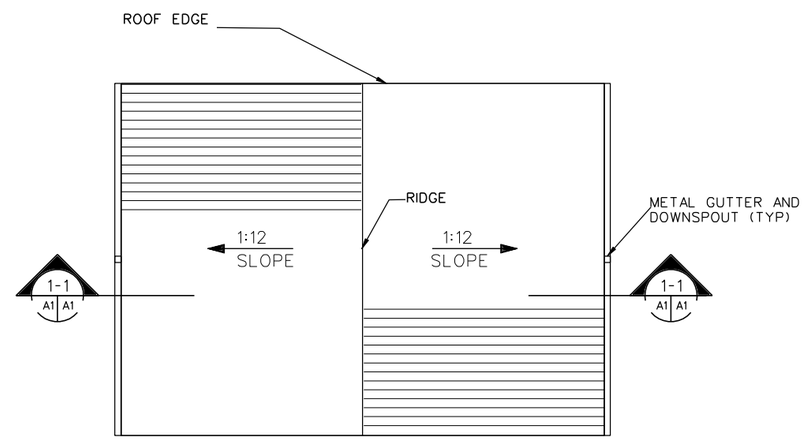

ROOF PLAN
SCALE= 1:50

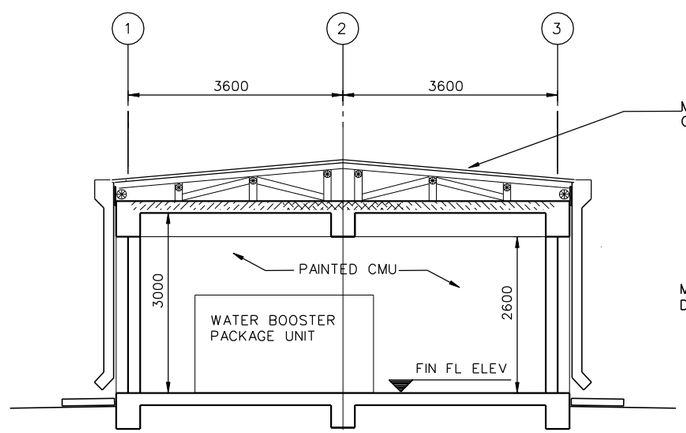

BUILDING SECTION
SCALE= 1 = 100

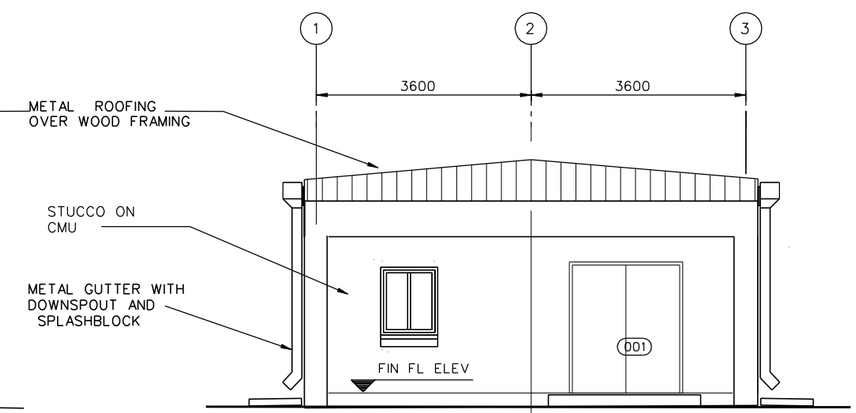

ELEVATION
SCALE= 1: 50

ROOM FINISH SCHEDULE LEGEND

FLOOR TYPE
F1 SEALED CONCRETE

FLOOR COLOR
1 SEALED CONCRETE - NATURAL FINISH

WALL TYPE
W1 PAINTED CMU

WALL COLOR
20 PAINTED CMU -HEMPEL, 1005-Y50R-25400,

CEILING TYPE
C1 PAINTED EXPOSED STRUCTURE

CEILING COLOR
30 PAINTED EXPOSED STRUCTURE - HEMPEL, 0502-Y-15420, OFF WHITE

ROOM FINISH SCHEDULE

ROOM NO.	ROOM NAME	FLOOR		BASE		WALLS		CEILING			REMARKS
		MAT'L.	COLOR	MAT'L.	COLOR	MAT'L.	COLOR	MAT'L.	COLOR	HEIGHT	
001	WATER BOOSTER ROOM	F1	1	--	--	W1	20	C1	30	3400	

DOOR SCHEDULE

DOOR							FRAME				FIRE LABEL	HDW SET	REMARKS
NO.	LOCATION	TYPE	MAT'L	WIDTH	HEIGHT	THICK	HEAD	JAMB	SILL	MAT"L			
100	WATER BOOSTER ROOM	F	HM	1800	2150	45	H-1/SA2	J-1/SA2	S-1/SA2	HM	--	2	

ROOM FINISH SCHEDULE NOTES:

1. ALL WALL PENETRATIONS SHALL BE SEALED TO PROVIDE A NEAT APPEARANCE. PENETRATIONS OF EXTERIOR WALLS SHALL BE SEALED TO BE WATER-TIGHT.
2. SEALANTS SHALL MATCH THE COLOR OF ADJACENT SURFACES.

1 0 1 2 3 4
1:50

SYMBOL	DESCRIPTION	DATE	APP

DESIGNED BY: S. Hanna
DATE: 02-05-07
DWN BY: S. Hanna
SUBMITTED BY: PHILIP L. DINELLO, CHIEF, POST FACILITIES DEV.
CHK BY: CHECK_BY
FILE NO.: AF0701 H-AR01PN

US Army Corps of Engineers
Transatlantic Programs Center

AFGHAN NATIONAL POLICE HEADQUARTERS (2 STORY) COMPOUND
AFGHANISTAN

BOOSTER PUMP HOUSE
BUILDING/ELEVATION
DOOR/FINISH SCHEDULES

SHEET REFERENCE NUMBER:
A-1

3/9/2007
h:\projects\afghanistan\af0701\af0701\arc\af0701i-ar01p.dwg

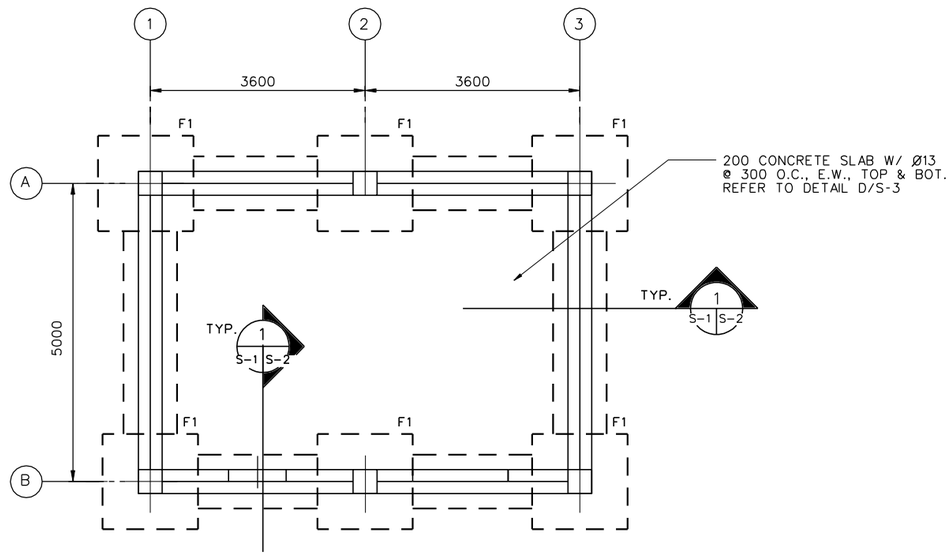

FOUNDATION AND SLAB PLAN

SCALE=1:50

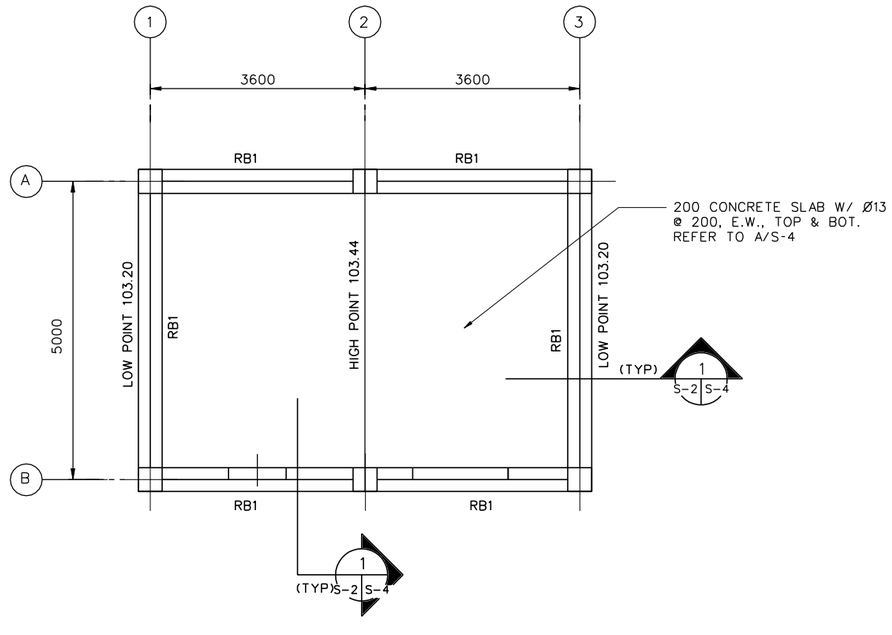

1. DESIGN LOADS (SERVICE)

   LIVE LOADS:

   ROOF: 1.0 KPA (20 PSF)
   OTHERS: 4.8 KPA (100 PSF)
   8.9 KN (2.0 K) CONCENTRATED LOAD

   WIND LOADS PER IBC-2003

   USING A "3-SECOND" WIND VELOCITY OF 125 KPH (78 MPH), EXPOSURE C AND IMPORTANCE FACTOR I=1.0

   EARTHQUAKE LOADS PER IBC-2003:

   USING A SEISMICITY: Ss=1.65g AND S_1=0.75g

2. MATERIALS:

   CONCRETE: 28 MPa (4 KSI)
   CYLINDER STRENGTH AT 28 DAYS

   REINFORCING: ASTM A615 GRADE 60 (60 KSI)

3. WORK THESE STRUCTURAL DRAWINGS WITH THE STANDARD-DETAILS DRAWINGS.

4. A RELATIVE (DATUM) FINISH FLOOR ELEVATION EQUAL TO 100.00 M. IS USED AS REFERENCE ELEVATION FOR ALL STRUCTURAL DRAWINGS. REFER TO CIVIL DRAWINGS FOR ACTUAL FINISH ELEVATIONS.

5. FOUNDATIONS ARE DESIGNED USING AN ALLOWABLE BEARING PRESSURE OF 0.75 KG/SQ. CM (1500 PSF), AND BOTTOM OF FOOTINGS ARE PLACED AS SHOWN ON DRAWINGS. GEOTECHNICAL INVESTIGATION SHALL CONFIRM BEARING CAPACITY TO BE NO LESS THAN 0.75 KG/SQ CM. IF GEOTECHNICAL INVESTIGATION SHOWS LESS THAN 0.75 KG/SQ CM THE CONTRACTOR SHALL REDESIGN FOOTINGS BASED ON THE GEOTECHNICAL INVESTIGATION. SEE SPECIFICAITON 01015 PARAGRAPH, GEOTECHNICAL, FOUNDATION AND SURVEY.

UNLESS OTHERWISE NOTED, LINEAR DIMENSIONS SHOWN ARE IN MILLIMETERS.

SYMBOL	DESCRIPTION	DATE	APP

DESIGNED BY: TCP
DATE: 02-05-07
DWN BY: TCP
SUBMITTED BY: PHILIP L. DINELLO, CHIEF, POST FACILITIES DEV.
CHK BY: KGO
FILE NO.: AF0701 I-SB01PN

US Army Corps of Engineers
Transatlantic Programs Center

AFGHAN NATIONAL POLICE HEADQUARTERS (2 STORY) COMPOUND
AFGHANISTAN

BOOSTER PUMP HOUSE
FOUNDATION, SLAB AND ROOF PLAN

SHEET REFERENCE NUMBER:
I
S-1

3/9/2007
h:\projects\afghanistan\af0701\af0701\str\AF0701I-SB01PN.dwg

FOOTING SCHEDULE

NOTE:
REFER TO A/S-2 FOR TYPICAL SECTION OF FOOTINGS.

MARK	CONCRETE DIMENSIONS			REINFORCEMENT		FTG. BOTTOM EL. METERS	REMARKS
	WIDTH	LENGTH	THICKNESS	TOP	BOTTOM		
F1	1600	1600	300	——	5-Ø25 E.W.	98.5	

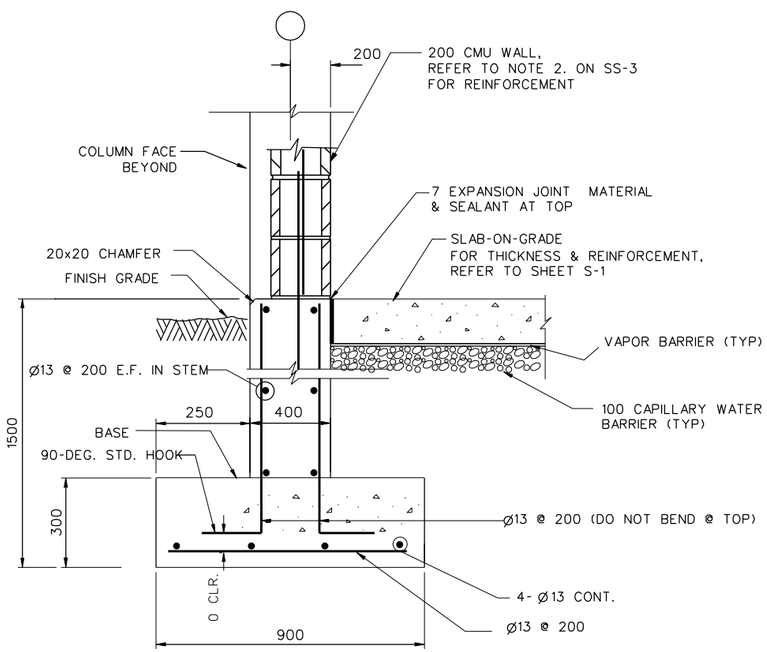

TYPICAL WALL FOOTING

SECTION 1 S-1 S-2
SCALE - N.T.S.

NOTES:
1. HORIZONTAL STEM WALL AND FOOTING REINFORCEMENTS ARE CONTINUOUS THROUGH COLUMN AND COLUMN FOOTING
2. AT DISCONTINUOUS STEM WALL BARS TERMINATE WITH STANDARD HOOK IN COLUMN. FOOTING BARS TERMINATE WITH 600 MM EMBEDMENT IN COLUMN FOOTING.
3. REFER TO CIVIL DWGS FOR ACTUAL FINISH FLOOR ELEVATIONS.

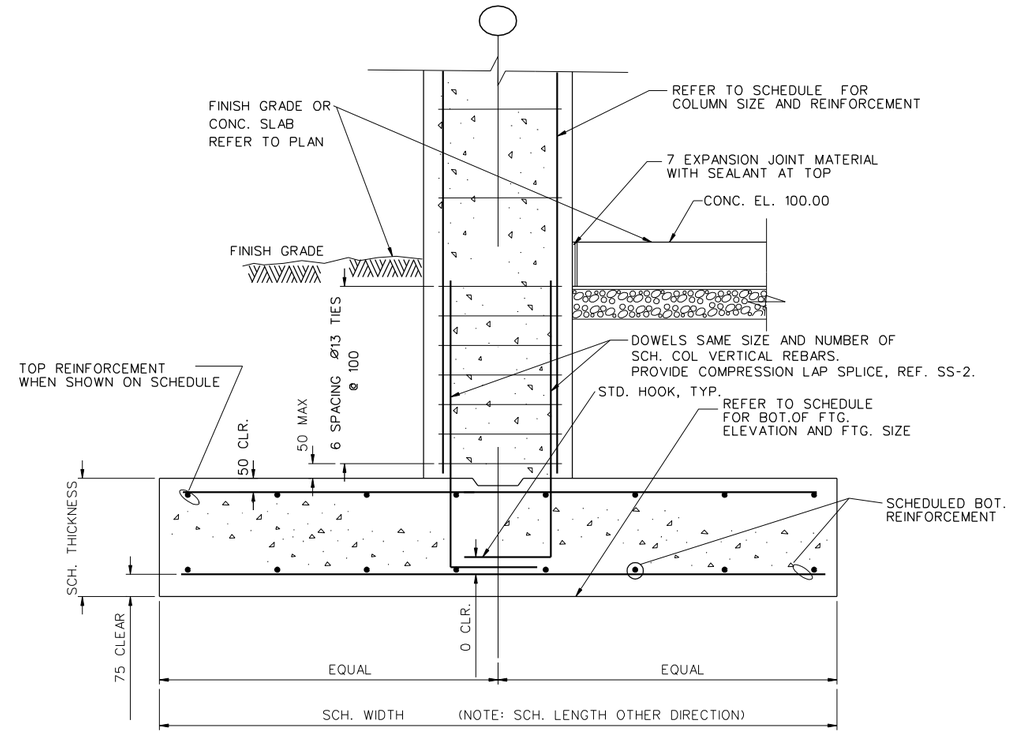

DETAIL A S-2 S-2
SCALE - N.T.S.

TYPICAL COLUMN FOOTING

UNLESS OTHERWISE NOTED, LINEAR DIMENSIONS SHOWN ARE IN MILLIMETERS.

SYMBOL	DESCRIPTION	DATE	APP.

DESIGNED BY: RG
DATE: 02-05-07
DWN BY: TCP
SUBMITTED BY: PHILIP L. DINELLO, CHIEF, POST FACILITIES DEV.
CHK BY: KGO
FILE NO.: AF0701 I-SB02DT

US Army Corps of Engineers
Transatlantic Programs Center

AFGHAN NATIONAL POLICE HEADQUARTERS (2 STORY) COMPOUND
AFGHANISTAN
BOOSTER PUMP HOUSE
FOOTING DETAILS

SHEET REFERENCE NUMBER:
I
S-2

3/9/2007
h:\projects\afghanistan\af0701\af070\str\af0701l-sb02dt.dwg

COLUMN SCHEDULE

NOTES: 1. REFER TO DETAILS B&C/S-3 AND A/S-2 FOR TYPICAL COLUMN DETAILS.

COLUMN GRIDS	COLUMN TYPE	CONCRETE DIMENSIONS		VERTICAL REINFORCEMENT	TIE REINFORCEMENT	
		WIDTH	DEPTH		SIZE	SPACING
A-1, A-2, A-3 B-1, B-2, B-3	C1	400	400	8-Ø 29	Ø13	300

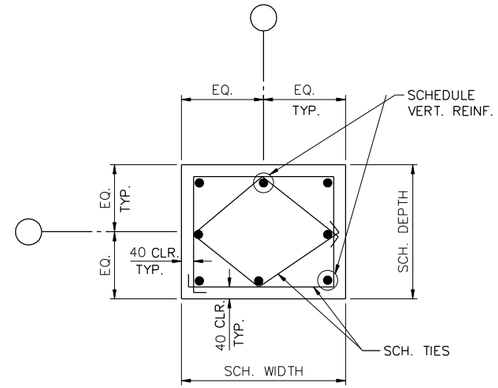

C1

COLUMN TYPE

DETAIL A S-3 | S-3
SCALE = N.T.S.

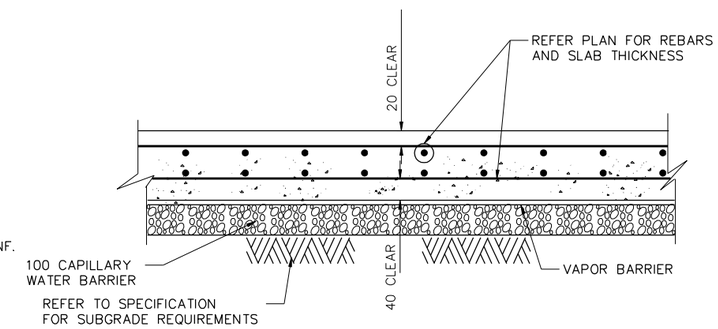

SLAB-ON-GRADE WITH TOP & BOTTOM REINFORCEMENTS

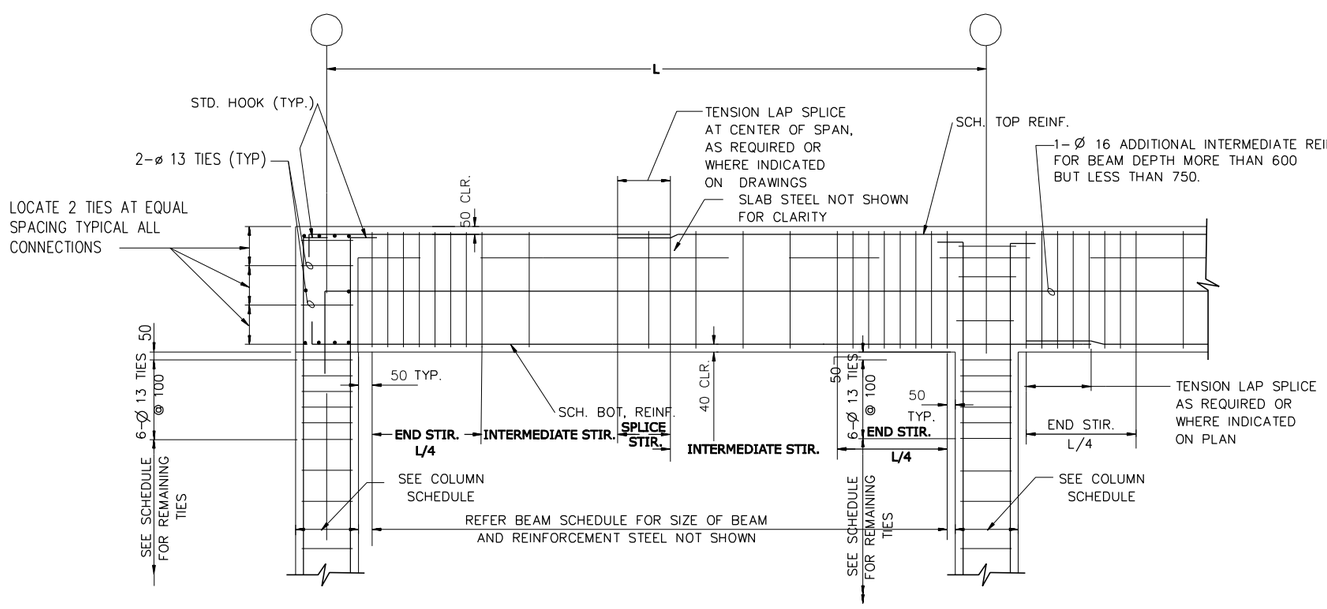

TYPICAL BEAM TO COLUMN END CONNECTION

DETAIL B S-3 | S-3
SCALE = N.T.S.

TYPICAL BEAM TO COLUMN INTERIOR CONNECTION

DETAIL C S-3 | S-3
SCALE = N.T.S.

UNLESS OTHERWISE NOTED, LINEAR DIMENSIONS SHOWN ARE IN MILLIMETERS.

SYMBOL	DESCRIPTION	DATE	APP.

DESIGNED BY: RG | DATE: 02-05-07
DWN BY: TCP | SUBMITTED BY: PHILIP L. DINELLO, CHIEF, POST FACILITIES DEV.
CHK BY: KGO | FILE NO.: AF0701 I-SF03DT

US Army Corps of Engineers
Transatlantic Programs Center

AFGHAN NATIONAL POLICE HEADQUARTERS (2 STORY) COMPOUND
AFGHANISTAN

BOOSTER PUMP HOUSE
SLAB-ON-GRADE DETAILS

SHEET REFERENCE NUMBER:
S-3

3/9/2007
h:\projects\afghanistan\af0701\af0701\str\af0701i-sf03dt.dwg

BEAM SCHEDULE

MARK	CONCRETE DIMENSIONS		FLEXURAL REINFORCEMENT		STIRRUP REINFORCEMENT				REMARKS
					SIZE	TYPE	SPACING		
	WIDTH	DEPTH	TOP	BOTTOM			ENDS & SPLICE	INTERMEDIATE	
RB1	400	700	4-Ø 22	4-Ø 22	Ø13		160	320	

NOTE: REFER TO DETAILS B&C/S-3 FOR TYPICAL BEAM ELEVATIONS AND SECTION 1/S-4 FOR TYPICAL BEAM SECTION.

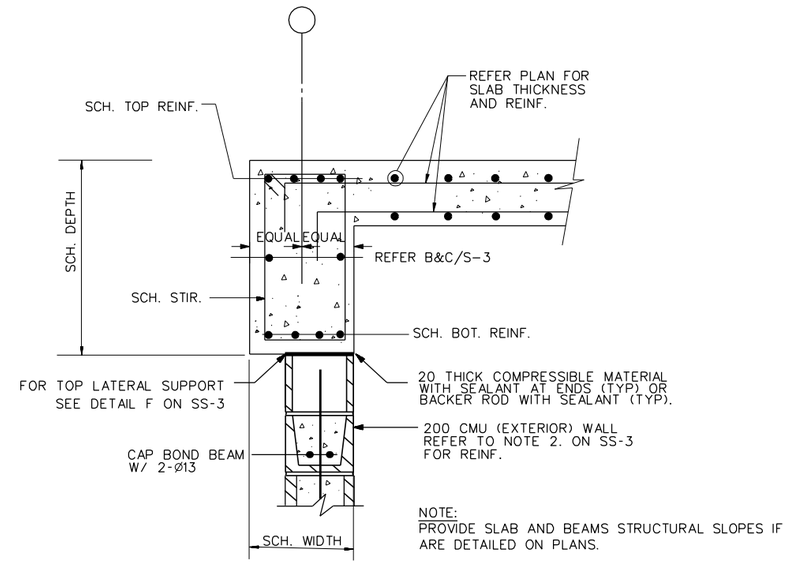

NOTE:
PROVIDE SLAB AND BEAMS STRUCTURAL SLOPES IF ARE DETAILED ON PLANS.

SECTION 1 S-1 S-4
SCALE = N.T.S.

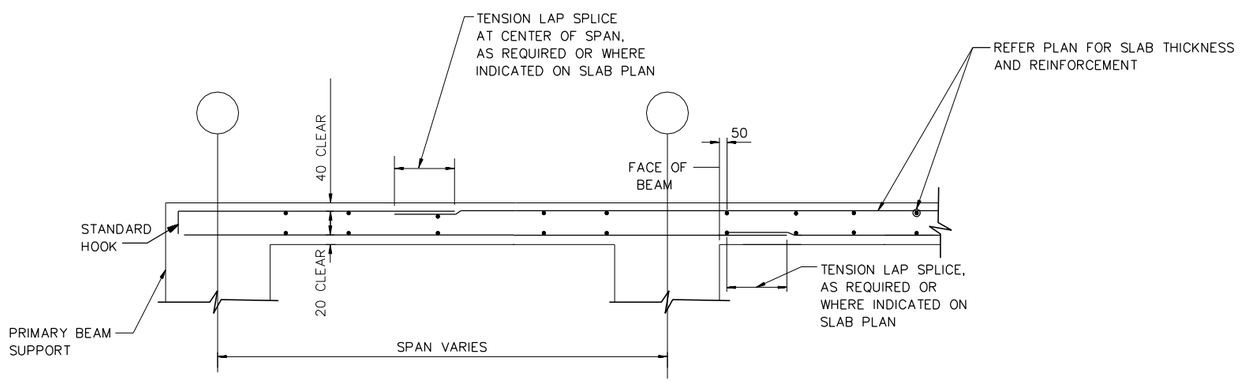

STRUCTURAL SLAB WITH TOP & BOTTOM REINFORCEMENTS

TYPICAL SECTIONS FOR STRUCTURAL SLABS A S-4 S-4
SCALE = N.T.S.

NOTE:

1. PROVIDE SIMILAR REINFORCEMENT PATTERNS FOR REINFORCEMENT RUNNING PERPENDICULAR TO SECTIONS.
2. PROVIDE SLAB AND BEAMS STRUCTURAL SLOPES IF ARE DETAILED ON PLANS.

UNLESS OTHERWISE NOTED, LINEAR DIMENSIONS SHOWN ARE IN MILLIMETERS.

SYMBOL	DESCRIPTION	DATE	APP.

DESIGNED BY: RG
DATE: 02-05-07
DWN BY: TCP
SUBMITTED BY: PHILIP L. DINELLO CHIEF, POST FACILITIES DEV.
CHK BY: KGO
FILE NO.: AF0701 I-SF04DT

US Army Corps of Engineers
Transatlantic Programs Center

AFGHAN NATIONAL POLICE HEADQUARTERS (2 STORY) COMPOUND
AFGHANISTAN
BOOSTER PUMP HOUSE
ROOF BEAM AND STRUCTURAL SLAB DETAILS

SHEET REFERENCE NUMBER:
I
S-4

3/9/2007
h:\projects\afghanistan\af0701\af0701\str\af0701i-sf04dt.dwg

NOTES:
1. FOR LEGENDS, ABBREVIATIONS AND STANDARD MECHANICAL DETAILS SEE SHEETS SM-1, SM-3, SP-1 AND SP-2.
2. FOR HVAC EQUIPMENT SCHEDULES AND CONTROLS SEE SHEET SM-2.
3. ALL DIMENSIONS ARE IN MM (IN) UNLESS NOTED OTHERWISE.
4. PROVIDE EACH EXHAUST FAN WITH MANUFACTURER'S STANDARD EXHAUST GRILL AND GRAVITY BACKDRAFT DAMPER.
5. PROVIDE 500 x 500 SAND LOUVER WITH 25MM THICK WASHABLE FILTERS.

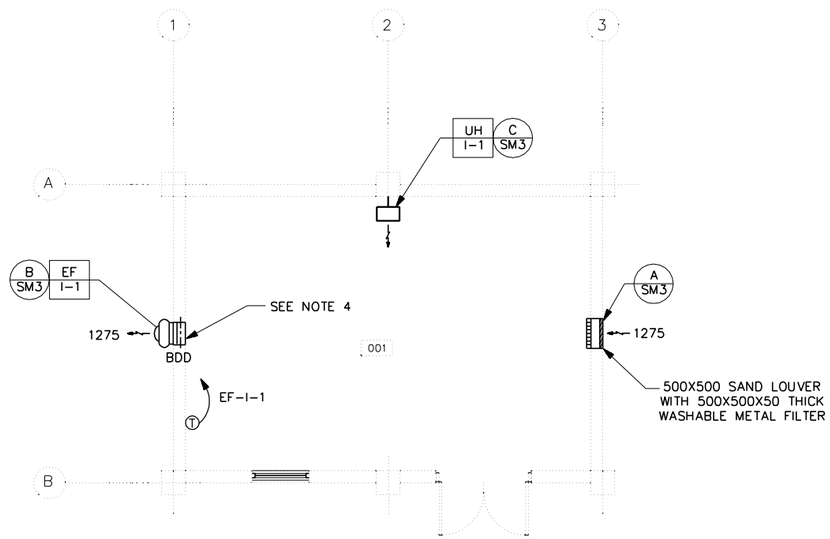

HVAC PLAN
SCALE= 1: 50

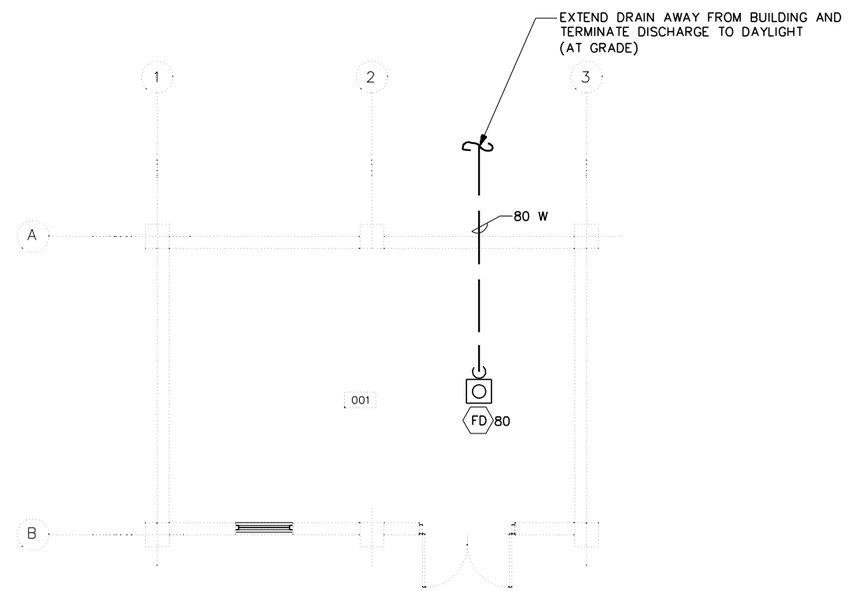

PLUMBING PLAN
SCALE= 1: 50

1 0 1 2 3 4
1:50

UNLESS OTHERWISE NOTED, LINEAR DIMENSIONS SHOWN ARE IN MILLIMETERS.

SYMBOL	DESCRIPTION	DATE	APP

DESIGNED BY: RMS
DATE: 02-05-07
DWN BY: JMC
SUBMITTED BY: SYED EMAYATULLA, CHIEF, PDU BLDG SYSTEMS
CHK BY: SE
FILE NO.: AF0701 I-MN01PN

US Army Corps of Engineers
Transatlantic Programs Center

AFGHAN NATIONAL POLICE HEADQUARTERS (2 STORY) COMPOUND
AFGHANISTAN
BOOSTER PUMP HOUSE
HVAC AND PLUMBING PLANS

SHEET REFERENCE NUMBER:
I
MP-1

3/9/2007
h:\projects\afghanistan\af0701\af0701\mec\AF0701I-MN01PN.DWG

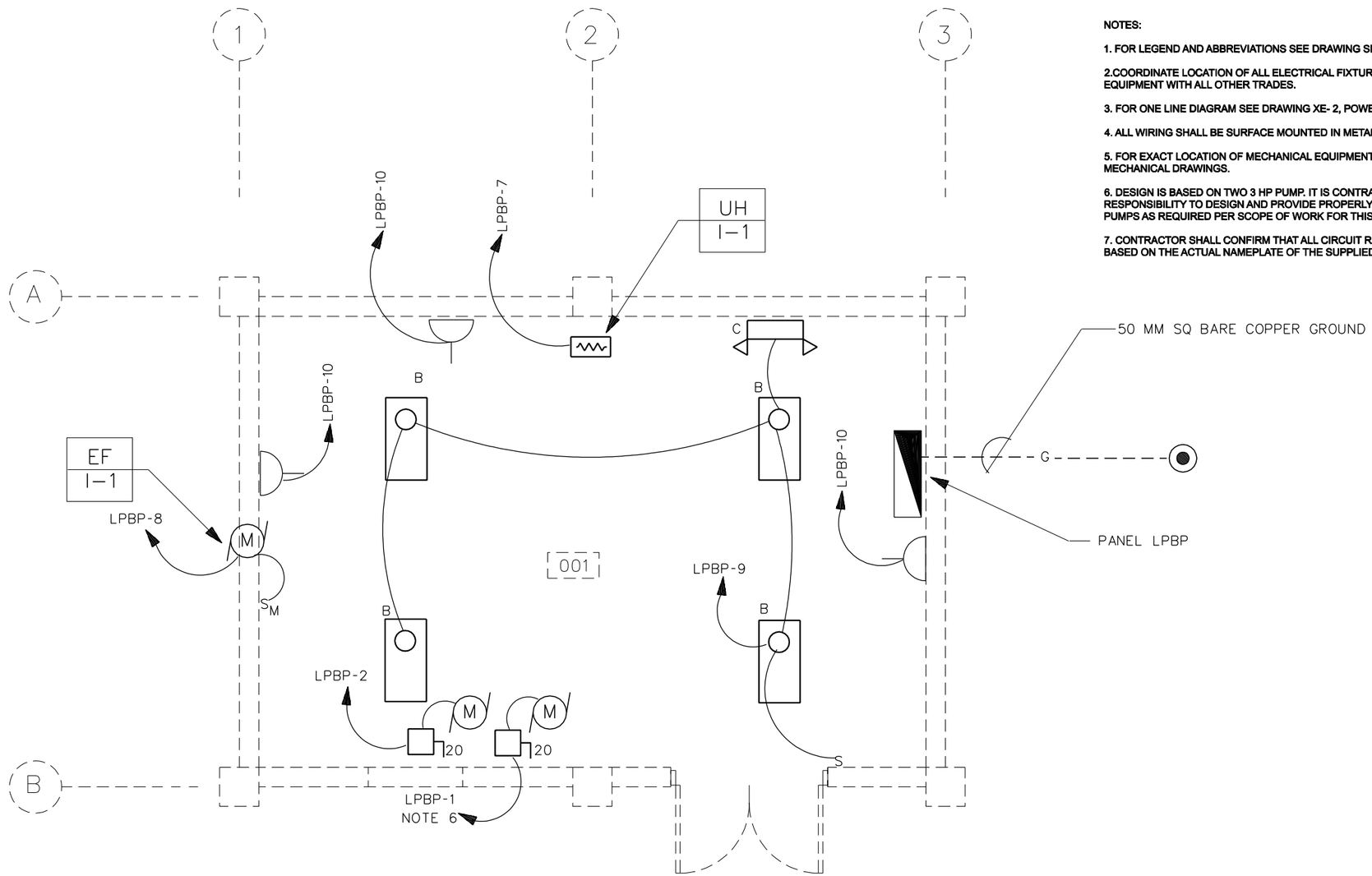

LIGHTING AND POWER PLAN

SCALE= 1:50

NOTES:

1. FOR LEGEND AND ABBREVIATIONS SEE DRAWING SE-1.
2. COORDINATE LOCATION OF ALL ELECTRICAL FIXTURES AND EQUIPMENT WITH ALL OTHER TRADES.
3. FOR ONE LINE DIAGRAM SEE DRAWING XE- 2, POWER PLANT.
4. ALL WIRING SHALL BE SURFACE MOUNTED IN METAL CONDUIT.
5. FOR EXACT LOCATION OF MECHANICAL EQUIPMENT SEE MECHANICAL DRAWINGS.
6. DESIGN IS BASED ON TWO 3 HP PUMP. IT IS CONTRACTORS' RESPONSIBILITY TO DESIGN AND PROVIDE PROPERLY SIZED PUMPS AS REQUIRED PER SCOPE OF WORK FOR THIS PROJECT.
7. CONTRACTOR SHALL CONFIRM THAT ALL CIRCUIT RATINGS ARE BASED ON THE ACTUAL NAMEPLATE OF THE SUPPLIED EQUIPMENT.

SYMBOL	DESCRIPTION	DATE	APP

DESIGNED BY: MM
DATE: 02-05-07
DWN BY: MM
SUBMITTED BY: SYED ENAYATULLA CHIEF, PDU BLDG SYSTEMS
CHK BY: SE
FILE NO.: AF0701 I-EL01PN

US Army Corps of Engineers
Transatlantic Programs Center

AFGHAN NATIONAL POLICE HEADQUARTERS (2 STORY) COMPOUND
AFGHANISTAN

BOOSTER PUMP HOUSE
LIGHTING AND POWER PLAN

SHEET REFERENCE NUMBER:
I
E-1

1 .50 0 1 1.5
1:25

3/9/2007
h:\projects\afghanistan\af0701\af0701\ele\af0701i-el01pn2.dwg

PANELBOARD LPBP SURFACE MOUNTED MINIMUM 14,000 ASYM. A.I.C. MIN.

_____ AMP. MAIN LUGS (OR) 60 AMP. MAIN BREAKER W/ 60 AMP. TRIP

CIRCUIT BREAKER TYPE 380/220 VOLTS 3 PHASE 4 WIRE 100 AMP. BUS

CKT. NO.	TRIP AMPS	NO. POLES	WIRE MM2	GND MM2	CONDUIT MM	LOAD SERVED	LOAD-V.A.			LOAD-V.A.			LOAD SERVED	CONDUIT MM	GND MM2	WIRE MM2	NO. POLES	TRIP AMPS	CKT. NO.
							AØ	BØ	CØ	AØ	BØ	CØ							
1	20	3	4	4	25	BOOSTER PUMP	1273			1273			BOOSTER PUMP	25	4	4	3	20	2
3								1273			1273								4
5									1273			1273							6
7	20	1	4	4	20	ELECTRIC HEAT UH-1-1	4000			250			EF-1-1	20	4	4	1	20	8
9	20	1	4	4	20	LIGHTING		450			540		RECEPTACLES	20	4	4	1	20	10
11	20	1				SPARE							SPARE				1	20	12
13	20	1				SPARE							SPACE						14
15						SPACE							SPACE						16
							5273	1723	1273	1523	1813	1273							

TOTAL CONN. LOAD 12.87 KVA 80 % DEMAND = ESTIMATED DEMAND LOAD: 10.30 KVA

TOTAL CONN. LOAD PER PHASE (KVA): AØ 6.80 BØ 3.53 CØ 2.54

SUPPLIED FROM POWER PLANT SWITCHBOARD(PPSB)

NOTES:

1. FOR LEGEND AND ABBREVIATIONS SEE DRAWING SE-1.
2. EMERGENCY LIGHT SHALL BE CONNECTED AHEAD OF LIGHT SWITCH.
3. FOR LIGHT FIXTURE SCHEDULE SEE DRAWING SE-1.
4. COORDINATE LOCATION OF ALL ELECTRICAL FIXTURES AND EQUIPMENT WITH ALL OTHER TRADES.
5. ALL WIRING SHALL BE IN CONCEALED OR SURFACE MOUNTED METAL CONDUIT.
6. REFER TO DRAWING XE-2 FOR CONDUIT AND CONDUCTOR SIZE.
7. CONTRACTOR SHALL CONFIRM THAT ALL CIRCUIT RATING IS BASED ON THE ACTUAL NAME PLATE OF THE SUPPLIED EQUIPMENT.

UNLESS OTHERWISE NOTED, LINEAR DIMENSIONS SHOWN ARE IN MILLIMETERS.

SYMBOL	DESCRIPTION	DATE	APP.

DESIGNED BY: MM
DATE: 02-05-07
DWN. BY: MM
SUBMITTED BY: SYED EMAYATULLA CHIEF, POLICE BLDG SYSTEMS
CHK BY: SE
FILE NO.: AF0701I-EP02SC

US Army Corps of Engineers
Transatlantic Programs Center

AFGHAN NATIONAL POLICE HEADQUARTERS (2 STORY) COMPOUND
AFGHANISTAN
BOOSTER PUMP HOUSE
PANEL SCHEDULES

SHEET REFERENCE NUMBER:
E-2

3/9/2007
h:\projects\afghanistan\af0701\af0701\ele\AF0701I-EP02SC.DWG

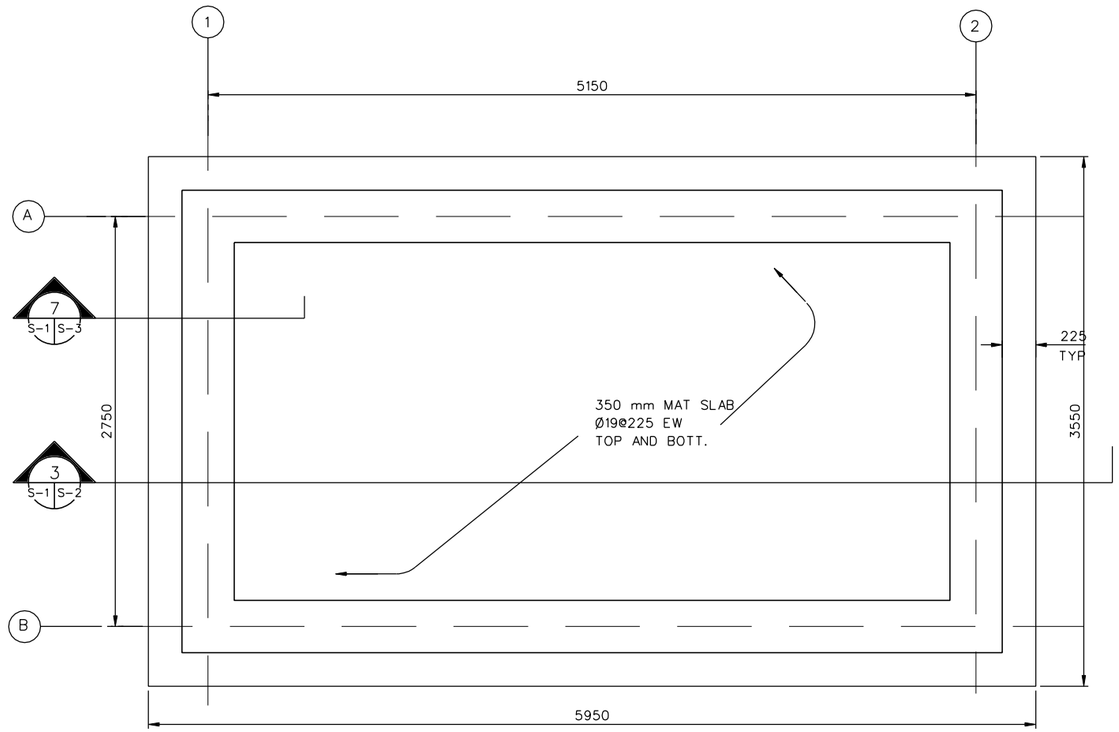

FOUNDATION PLAN
SCALE- 1:100

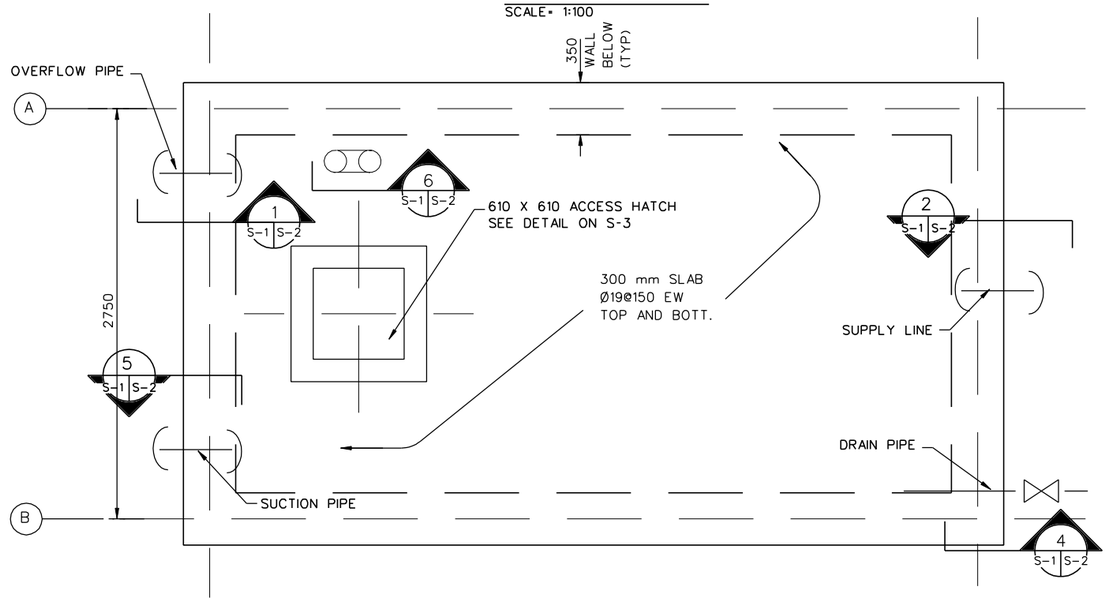

TOP COVER SLAB PLAN
SCALE- 1:100

1. DESIGN LOADS (SERVICE)

   LIVE LOADS:

   ROOF: 1.0 KPA (20 PSF)
   OTHERS: 4.8 KPA (100 PSF)
   8.9 KN (2.0 K) CONCENTRATED LOAD

   WIND LOADS PER IBC-2003

   USING A "3-SECOND" WIND VELOCITY OF 125 KPH (78 MPH), EXPOSURE C AND IMPORTANCE FACTOR I=1.0

   EARTHQUAKE LOADS PER IBC-2003:

   USING A SEISMICITY: Ss=1.65g AND S_1 =0.75g

2. MATERIALS:

   CONCRETE: 28 MPa (4 KSI)
   CYLINDER STRENGTH AT 28 DAYS

   REINFORCING: ASTM A615 GRADE 60 (60 KSI)

3. WORK THESE STRUCTURAL DRAWINGS WITH THE STANDARD-DETAILS DRAWINGS.

4. A RELATIVE (DATUM) FINISH FLOOR ELEVATION EQUAL TO 100.00 M. IS USED AS REFERENCE ELEVATION FOR ALL STRUCTURAL DRAWINGS. REFER TO CIVIL DRAWINGS FOR ACTUAL FINISH ELEVATIONS.

5. FOUNDATIONS ARE DESIGNED USING AN ALLOWABLE BEARING PRESSURE OF 0.75 KG/SQ. CM (1500 PSF), AND BOTTOM OF FOOTINGS ARE PLACED AS SHOWN ON DRAWINGS. GEOTECHNICAL INVESTIGATION SHALL CONFIRM BEARING CAPACITY TO BE NO LESS THAN 0.75 KG/SQ CM. IF GEOTECHNICAL INVESTIGATION SHOWS LESS THAN 0.75 KG/SQ CM THE CONTRACTOR SHALL REDESIGN FOOTINGS BASED ON THE GEOTECHNICAL INVESTIGATION. SEE SPECIFICAITON 01015 PARAGRAPH, GEOTECHNICAL, FOUNDATION AND SURVEY.

6. PIPE LOCATIONS SHALL BE COORDINATED WITH WATER DISTRIBUTION SYSTEM.

UNLESS OTHERWISE NOTED, LINEAR DIMENSIONS SHOWN ARE IN MILLIMETERS.

SYMBOL	DESCRIPTION	DATE	APP

DESIGNED BY: TCP
DATE: 02-05-07
DWN BY: TCP
SUBMITTED BY: PHILIP L. DINELLO, CHIEF, POST FACILITIES DEV.
CHK BY: KGO
FILE NO.: AF0701 J-SB01PN

US Army Corps of Engineers
Transatlantic Programs Center

AFGHAN NATIONAL POLICE HEADQUARTERS (2 STORY) COMPOUND
AFGHANISTAN
WATER TANK
FOUNDATION PLAN AND TOP COVER SLAB PLAN

SHEET REFERENCE NUMBER:
J
S-1

3/9/2007
h:\projects\afghanistan\af0701\af0701\str\AF0701J-SB01N.dwg

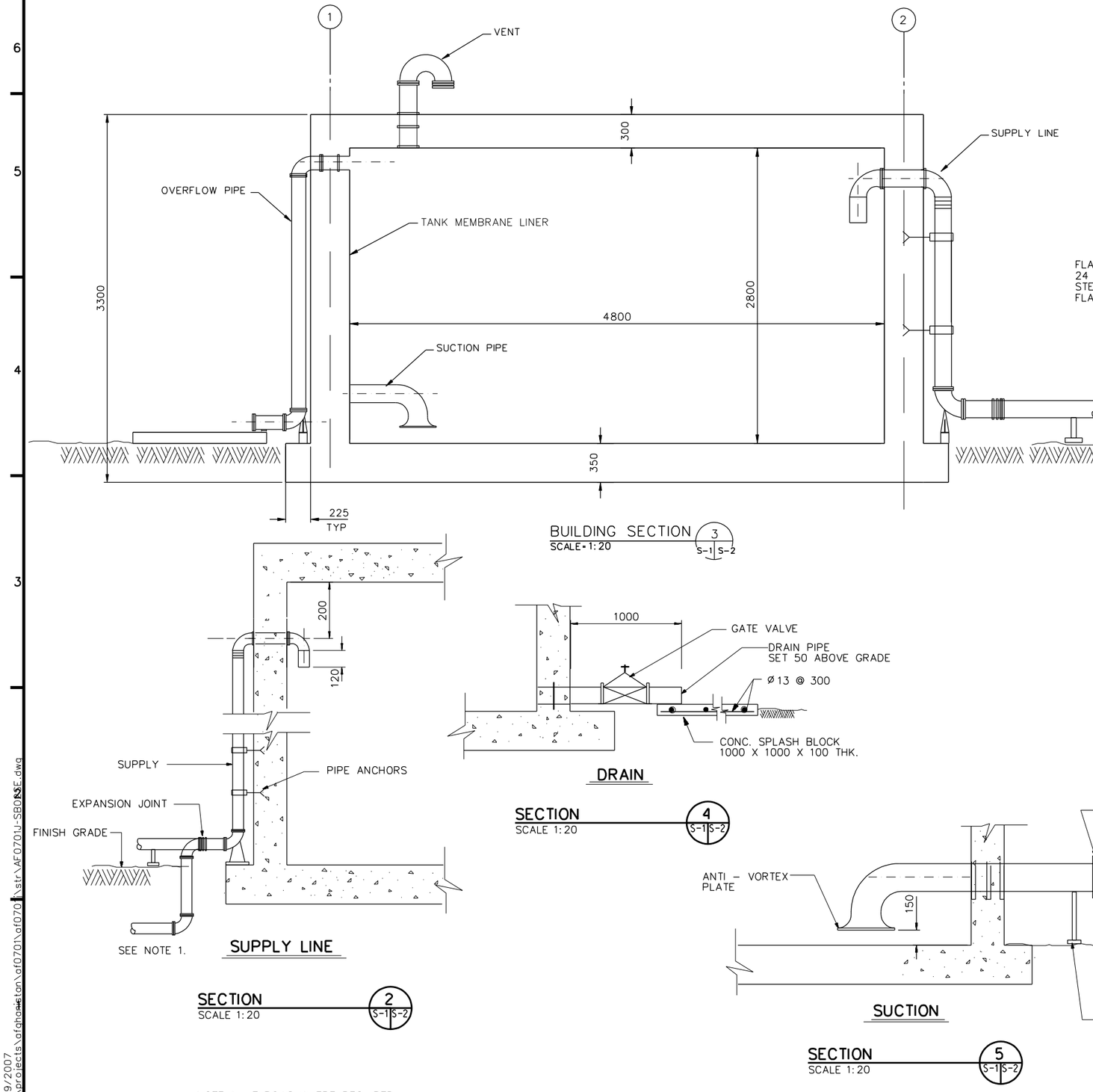

BUILDING SECTION 3 S-1 S-2
SCALE = 1:20

DRAIN

SECTION 4 S-1 S-2
SCALE 1:20

SUPPLY LINE

SECTION 2 S-1 S-2
SCALE 1:20

SUCTION

SECTION 5 S-1 S-2
SCALE 1:20

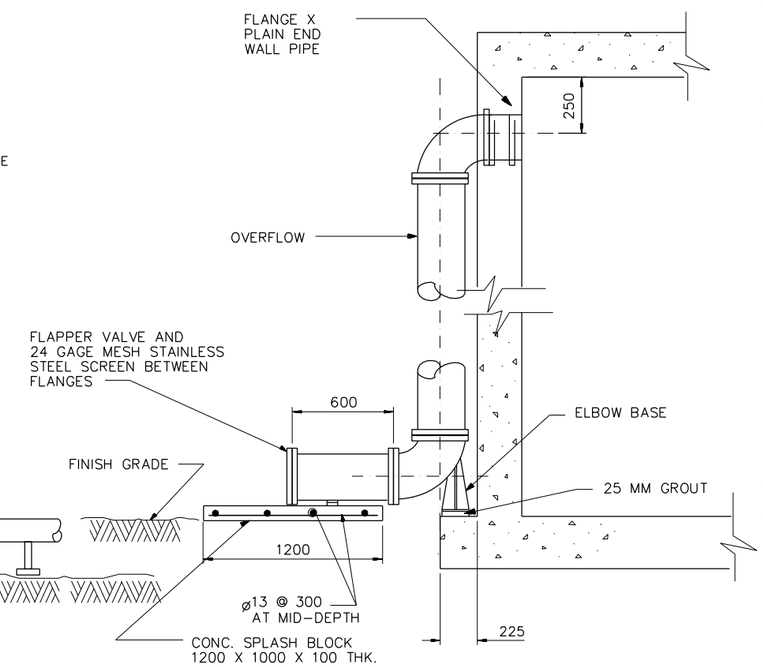

OVER FLOW

SECTION 1 S-1 S-2
SCALE 1:20

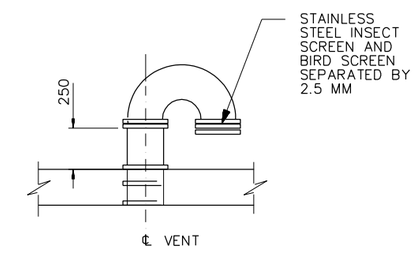

SECTION 6 S-1 S-2
SCALE NTS

NOTE 1. ELBOWS WHERE REQUIRED.

UNLESS OTHERWISE NOTED, LINEAR DIMENSIONS SHOWN ARE IN MILLIMETERS.

SYMBOL	DESCRIPTION	DATE	APP

DESIGNED BY: TCP
DATE: 02-05-07
DWN BY: TCP
SUBMITTED BY: PHILIP L. DINELLO, CHIEF, POST FACILITIES DEV.
CHK BY: KGO
FILE NO.: AF0701 J-SB02SE

US Army Corps of Engineers
Transatlantic Programs Center

AFGHAN NATIONAL POLICE HEADQUARTERS (2 STORY) COMPOUND
AFGHANISTAN
WATER TANK
WATER STORAGE TANK SECTION AND DETAILS

SHEET REFERENCE NUMBER:
J
S-2

3/9/2007
h:\projects\afghanistan\af0701\af0701\str\AF0701J-SB02SE.dwg

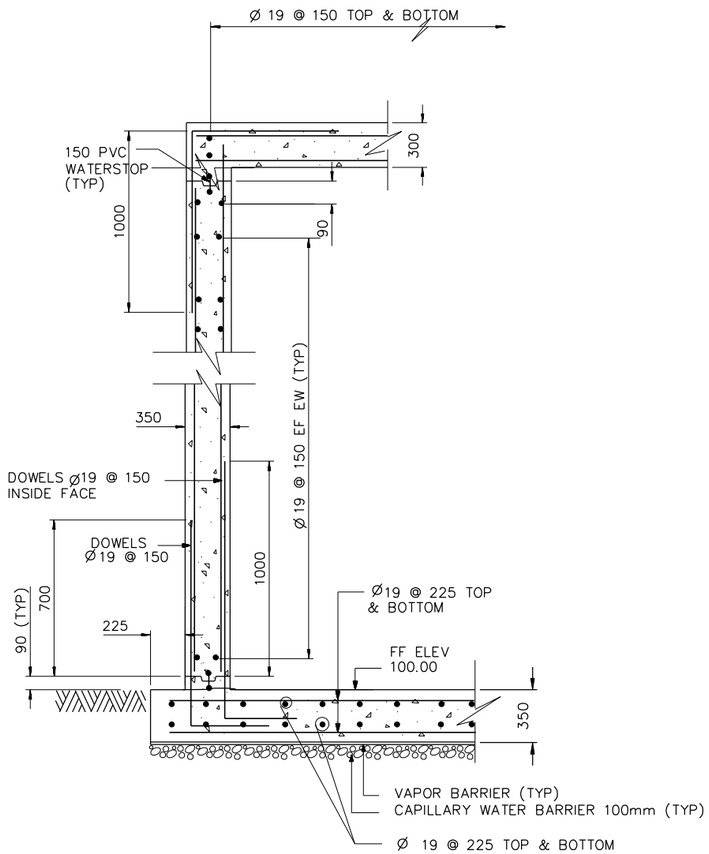

SECTION 7 S-1 S-3
SCALE 1:20

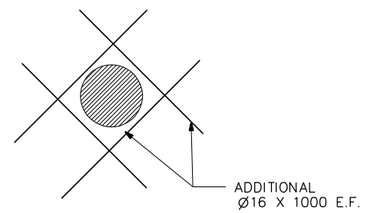

PIPE THROUGH WALL DETAIL
N.T.S.

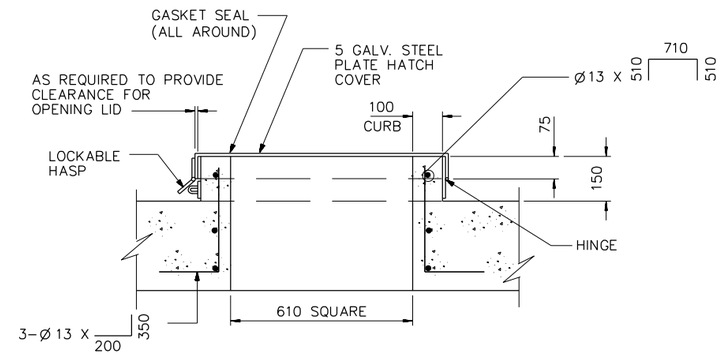

ACCESS HATCH DETAIL
SCALE = 1:10

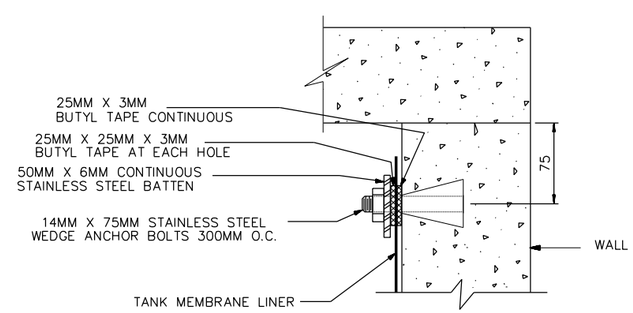

LINER FASTENER DETAIL
NOT TO SCALE

0 .50 1.00
1:10

1 .50 0 1
1:20

UNLESS OTHERWISE NOTED, LINEAR DIMENSIONS SHOWN ARE IN MILLIMETERS.

SYMBOL	DESCRIPTION	DATE	APP

DESIGNED BY: TCP
DATE: 02-05-07
DWN BY: TCP
SUBMITTED BY: PHILIP L. DINELLO CHIEF, POST FACILITIES DEV.
CHK BY: KGO
FILE NO.: AF0701 J-SB03SE

US Army Corps of Engineers
Transatlantic Programs Center

AFGHAN NATIONAL POLICE HEADQUARTERS (2 STORY) COMPOUND
AFGHANISTAN
WATER TANK
SECTION AND DETAILS

SHEET REFERENCE NUMBER:
J
S-3

3/9/2007
h:\projects\afghanistan\af0701\af0701\str\AF0701J-SB03SE.dwg

ARCHITECTURAL ABBREVIATIONS AND SYMBOLS

ABBREVIATIONS

A

@	AT
AC	AIR CONDITIONER
ACCFLR	RAISED FLOOR SYSTEM
ACFT	AIRCRAFT
ACST	ACOUSTICAL
AD	AREA DRAIN
A/E	ARCHITECT/ENGINEERS
AFF	ABOVE FINISH FLOOR
ALUM	ALUMINUM
ANOD	ANODIZED
AOC	AIR OPERATIONS CENTER
APPROX	APPROXIMATELY
ARCH	ARCHITECTURAL
ASPH	ASPHALT
ATC	ACOUSTICAL TILE CEILING
AWP	ACOUSTICAL WALL PANEL

B

BB	BALL BEARING
BMUM	BITUMINOUS
BL	BASE LINE
BLDG	BUILDING
BLK	BLOCK
B/M	BENCH MARK OR BEAM
BOM	BILL OF MATERIALS
BRKT	BRACKET
BOT	BOTTOM
BRD	BOARD

C

CARP	CARPET
CB	CORE BORING
C TO C	CENTER TO CENTER
CEM	CEMENT
CH	CLEAR HEART
CFM	CUBIC FEET PER MINUTE
CI	CAST IRON
CIP	CAST IN PLACE
CJ OR CJT	CONTROL JOINT
℄	CENTER LINE
CLF	CHAIN LINK FENCE
CLG	CEILING
CLR	CLEAR
CM	CENTIMETER
CMDR	COMMANDER
CMP	CORRUGATED METAL PIPE
CMU	CONCRETE MASONRY UNIT
CO	CLEANOUT
COE	CORPS OF ENGINEERS
CONCR	CONCRETE
CONN	CONNECTION
CONST	CONSTRUCTION
CONT	CONTINUOUS
CONTAM	CONTAMINATED
CONTR	CONTRACTOR
CORR	CORRUGATED
CPRSR	COMPRESSOR
CT	CERAMIC TILE
CTR	CENTER
CUL	CULVERT
CUM	CUBIC METERS
CWT	COUNTERWEIGHT
COORD	COORDINATE

D

D	DEPTH
DECON	DECONTAMINATION
DET	DETAIL
DI	DRAIN INLET
DIA	DIAMETER
DIM	DIMENSION
DISP	DISPENSER
DJ	DUMMY JOINT
DRWG	DRAWING
DS	DOWNSPOUT
DW	DRINKING WATER

E

E	EAST
EA	EACH
EG	EXISTING GRADE
EJ	EXPANSION JOINT
EL OR ELEV	ELEVATION
ELEC	ELECTRICAL
ENCL	ENCLOSURE
ENGR	ENGINEER
ENT	ENTRANCE
EPDM	ELASTOMERIC ROOFING
EPX	EPOXY COATING
EQ	EQUAL
ES/EW	EMERGENCY SHOWER/EYE WASH
EW	EACH WAY
EXCA	EXCAVATE
EXH	EXHAUST
EXIST	EXISTING
EXP	EXPANSION OR EXPOSED
EWC	ELECTRIC WATER COOLER
EWH	ELECTRIC WATER HEATER

ABBREVIATIONS

F

F	FEET
FD	FLOOR DRAIN
FDN	FOUNDATION
FF & E	FURNITURE, FURNISHINGS AND EQUIPMENT
F TO F	FACE TO FACE
FE	FIRE EXTINGUISHER
FFLEL	FINISH FLOOR ELEVATION
FG	FINISH GRADE
FH	FIRE HYDRANT
FIN	FINISH
FL	FLOOR
FPM	FEET PER MINUTE
FTG	FOOTING

G

GA	GAUGE
GALV	GALVANIZED
GPM	GALLONS PER MINUTE
GR	GRADE
GT	GATE (FENCE)
GVL	GRAVEL
GYP	GYPSUM

H

HB	HOSE BIB
HDW	HARDWARE
HDWD	HARDWOOD
HZ	HERTZ
HF	HIGH FREQUENCY
HGT	HEIGHT
HM	HOLLOW METAL
HORIZ	HORIZONTAL
HP	HIGH POINT
HH	HEX HEAD
HC	HANDICAPPED
HR	HOUR

I

ID	INSIDE DIAMETER
INSTL	INSTALL
INTEL	INTELLIGENCE
INTER	INTERIOR
INV	INVERT
INSUL	INSULATION

J

JAN	JANITOR
JB	JUNCTION BOX
JCT	JUNCTION
JT	JOINT

K

KG	KILOGRAM
KM	KILOMETER
KPA	KILO PASCAL
KPH	KILOMETERS PER HOUR

L

LAM	LAMINATE
LAT	LATITUDE
LAV	LAVATORY
LBY	LOBBY
LBS	POUNDS
LG	LONG
LINMET	LINEAR METAL CEILING SYSTEM
LNRPNL	METAL LINER PANEL
LOC	LIMITS OF CONSTRUCTION
LONG	LONGITUDE
LP	LOW POINT
LSD	LARGE SCREEN DISPLAY
LTG P	LIGHTING PANEL
LVR	LOUVER

M

M	METER
MATL	MATERIAL
MAX	MAXIMUM
MECH	MECHANICAL
MH	MANHOLE
MISC	MISCELLANEOUS
MIN	MINIMUM
ML	MATCH LINE
MM	MILLIMETERS
MO	MASONRY OPENING
MON	MONUMENT
MOIST	MOISTURE
MPH	MILES PER HOUR
MTD	MOUNTED
MTL	METAL
MSNRY	MASONRY
MFR	MANUFACTURER
MATL	MATERIAL
MW	FORCE PROTECTION DOOR

ABBREVIATIONS

N

N	NORTH
NA	NOT APPLICABLE
NIC	NOT IN CONTRACT
NICAD	NICKEL CADMIUM
NO	NUMBER
NTS	NOT TO SCALE

O

OC	ON CENTER
OD	OUTSIDE DIAMETER
OPH	OPPOSITE HAND
OPNG	OPENING
OPP	OPPOSITE
OPS	OPERATIONS

P

PANL	PANEL
PCS	PIECES
PE	POLYETHYLENE
PKG	PARKING OR PACKAGE
PL	PLATE
PLAS	PLASTER
PLBG	PLUMBING
POL	PETROLEUM OIL LUBRICANT
PP	POWER PANEL
PRCST	PRECAST
PROP	PROPERTY
PSF	POUNDS PER SQUARE FOOT
PTD	PAINTED
PTR	PIPE TRENCH
PVMT	PAVEMENT

Q

Q	DESIGN DISCHARGE
QD	QUICK DISCONNECT

R

R	RADIUS OR REINFORCED
RCP	REINFORCED CONCRETE PIPE
RD	ROOF DRAIN
RE	REFERENCE
REINF	REINFORCED
REQD	REQUIRED
REV	REVISION
RH	RIGHT HAND
RI	RISER
RM	ROOM
RO	ROUGH OPENING
ROW	RIGHT OF WAY
RP	RADIUS POINT
RR	RAILROAD
RT	RIGHT
RTU	ROOF TOP UNIT
RVS	REVERSE
RW	RAW WATER

S

S OR SO	SOUTH
SCH	SCHEDULE
SECT	SECTION
SD	SMOKE DETECTOR
SG	SUB GRADE
SH OR SHT	SHEET
SHWR	SHOWER
SIM	SIMILIAR
SL	SLOPE
SMH	SEWER MANHOLE
SOC	STRATEGIC OPERATIONS CENTER
SPEC	SPECIFICATION
SPFC	SPECIFIC
SQ	SQUARE
SS	SANITARY SEWER
SST	STAINLESS STEEL
STA	STATION
STD	STANDARD
STL	STEEL
STRUCT	STRUCTURAL
SUSPLAS	SUSPENDED PLASTER
SVC	SERVICE CONNECTION

ABBREVIATIONS

T

TC	TOP OF CURB
TELE C	TELEPHONE CABINET
TER	TERRAZZO
TG	TOP OF GRATE
TK	TANK
TO	TECHNICAL ORDER
TOS	TOP OF STEEL
TOW	TOP OF WALL
TP	TEST PIT
TR	TRENCH
TSW	TOP OF SIDEWALK
TYP	TYPICAL
TP	TOP OF PAVEMENT
TH/THK	THICK / THICKNESS

U

UBC	UNIFORM BUILDING CODE
UG	UNDERGROUND
UNO	UNLESS NOTED OTHERWISE
UPS	UNINTERRUPTIBLE POWER SUPPLY
UTIL	UTILITY

V

VB	VALVE BOX
VC	VERTICAL CURVE
VCT	VINYL COMPOSITION TILE
VEH	VEHICLE
VEL	VELOCITY
VERT	VERTICAL
VEST	VESTIBULE
VIP	VERY IMPORTANT PERSON
VTR	VENT THRU ROOF

W

W	WEST, WIDE
WC	WATER CLOSET
WM	WIRE MESH PARTITION
WSP	WELDED STEEL PIPE
WT	WEIGHT
W/O	WITHOUT
W/	WITH
WWF	WELDED WIRE FABRIC

REFERENCE SYMBOLS

- A / A-1 | A-2 — DETAIL IDENTIFICATION; NO.OF SHEET ON WHICH DETAIL IS DRAWN; NO. OF SHEET ON WHICH CONDITION IS REFERENCED
- 1 / A-3 — BUILDING SECTION IDENTIFICATION; NO.OF SHEET ON WHICH SECTION IS DRAWN
- A / A-3 — WALL SECTION IDENTIFICATION; NO.OF SHEET ON WHICH SECTION IS DRAWN
- 102 — ROOM NUMBER
- 102 — DOOR NUMBER
- H — COLUMN LINE
- A — WINDOW TYPE
- A — WALL TYPE IDENTIFIER
- 102 — EQUIPMENT IDENTIFIER
- 102 — FURNITURE IDENTIFIER
- FIN FL ELEV 100.00 — FINISH FLOOR EL. SYMBOL IN PLAN
- FIN FL ELEV 100.00 — FINISH FLOOR EL. SYMBOL IN SECT. AND ELEV.
- A B C D — INTERIOR ELEVATION KEY SYMBOL
- A / A-3 — EXTERIOR ELEVATION IDENTIFIER
- STUCCO CONTROL JOINT
- L2 — LOUVER IDENTIFIER
- STRUCTURAL CONTROL JOINT
- WALLS TO THE UNDERSIDE OF THE STRUCTURE

MATERIAL SYMBOLS

- EARTH
- CAST CONCRETE (SECTION)
- LIGHTWEIGHT CONCRETE (SECTION)
- CONCRETE MASONRY UNIT (LARGE SCALE-PLAN)
- STEEL
- ROUGH WOOD
- FINISHED WOOD
- WOOD BLOCKING
- PLYWOOD-LARGE SCALE
- GLASS (ELEVATION)
- BATT FILL INSULATION (SECTION)
- LOOSE FILL INSULATION (PLAN)
- RIGID BOARD INSULATION
- CERAMIC TILE-LARGE SCALE
- CONCRETE (PLAN & ELEVATION)
- CERAMIC TILE (PLAN & ELEVATION)
- PLASTER OR STUCCO (ELEVATION)
- SHEET MEMBRANE
- LANDSCAPING (TREE, SHRUB, ETC.)
- CHAIN LINK PARTITION

GENERAL NOTES:

1. THE LIST OF ABBREVIATIONS IS SHOWN AS A GUIDE ONLY AND DOES NOT NECESSARILY INCLUDE ALL ABBREVIATIONS USED. OTHER ABBREVIATIONS MAY BE FOUND AMONG THE DRAWINGS. SOME ABBREVIATIONS LISTED MAY NOT HAVE BEEN USED.
2. FOR REFERENCE PURPOSES, A FINISHED FLOOR ELEVATION OF 100.00 HAS BEEN ESTABLISHED FOR GRADE LEVEL FLOOR PLANS. ON ARCHITECTURAL DRAWINGS. SEE CIVIL DRAWINGS FOR ACTUAL FINISHED FLOOR AND FINISHED GRADE ELEVATIONS.
3. HOUSEKEEPING PADS FOR MECHANICAL EQUIPMENT SHALL BE PROVIDED AS REQUIRED BY MECHANICAL DRAWINGS. SIZE AND LOCATION SHALL BE COORDINATED WITH MECHANICAL EQUIPMENT PROVIDED.

UNLESS OTHERWISE NOTED, LINEAR DIMENSIONS SHOWN ARE IN MILLIMETERS.

SYMBOL	DESCRIPTION	DATE	APP

DESIGNED BY: YSK | DATE: 02-05-07
DWN BY: JSG | SUBMITTED BY: PHILIP L. DINELLO, CHIEF, PDT FACILITIES DEV
CHK BY: YSK | FILE NO.: AF0701 S-AR01GN

US Army Corps of Engineers
Transatlantic Programs Center

AFGHAN NATIONAL POLICE HEADQUARTERS (2 STORY) COMPOUND
AFGHANISTAN
STANDARD DETAILS
SYMBOLS AND ABBREVIATIONS

SHEET REFERENCE NUMBER:
SA-1

3/9/2007
h:\projects\afghanistan\af0701\general\arc\af0701s-ar01gn.dwg

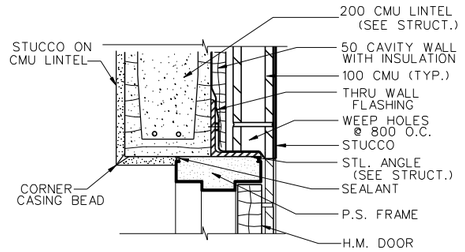

HEAD DETAIL (H-1 / SA2)
SCALE 1:5

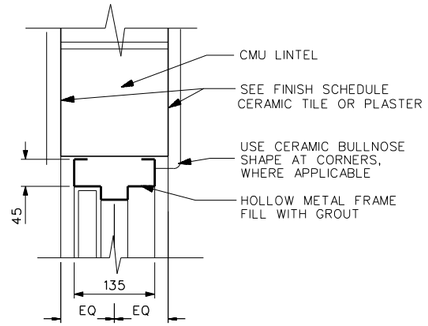

HEAD DETAIL (H-2 / SA2)
SCALE 1:5

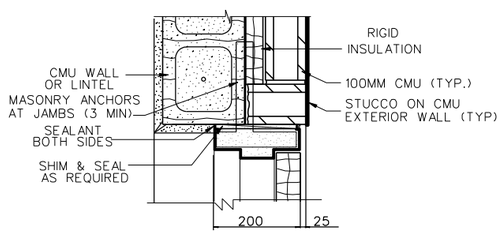

JAMB DETAIL (J-1 / SA2)
SCALE 1:5

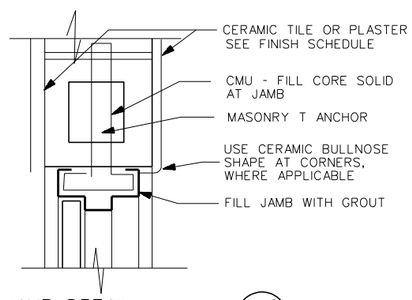

JAMB DETAIL (J-2 / SA2)
SCALE 1:5

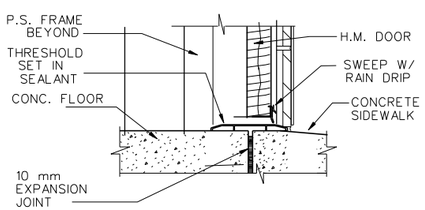

SILL DETAIL (S-1 / SA2)
SCALE 1:5

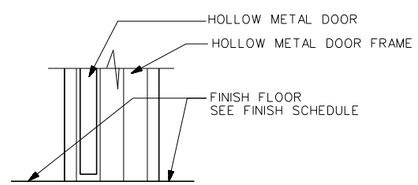

SILL DETAIL (S-2 / SA2)
SCALE 1:5

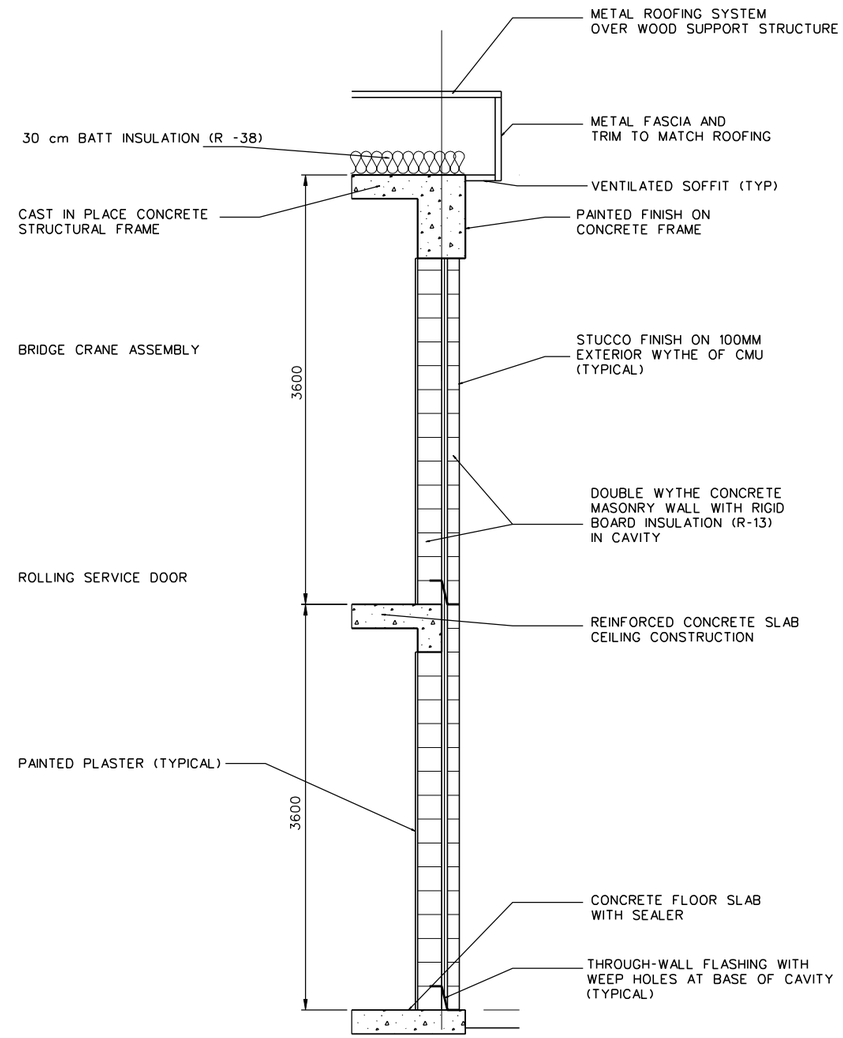

WALL SECTION
SCALE= 1 :25

0 .10 .20 .30 .40 1
1:5

UNLESS OTHERWISE NOTED, LINEAR DIMENSIONS SHOWN ARE IN MILLIMETERS.

SYMBOL	DESCRIPTION	DATE	APR

DESIGNED BY: YSK	DATE: 02-05-07	
DWN BY: JSG/YSK	SUBMITTED BY: PHILIP L. DINELLO CHIEF, POST FACILITIES DEV.	
CHK BY: YSK	FILE NO.: AF0701 $-AR02DT	

US Army Corps of Engineers
Transatlantic Programs Center

AFGHAN NATIONAL POLICE HEADQUARTERS (2 STORY) COMPOUND
AFGHANISTAN
STANDARD DETAILS
DOOR DETAILS AND WALL SECTION

SHEET REFERENCE NUMBER:
SA-2

3/9/2007
h:\projects\afghanistan\af0701\general\arc\af0701$-ar02dt.dwg

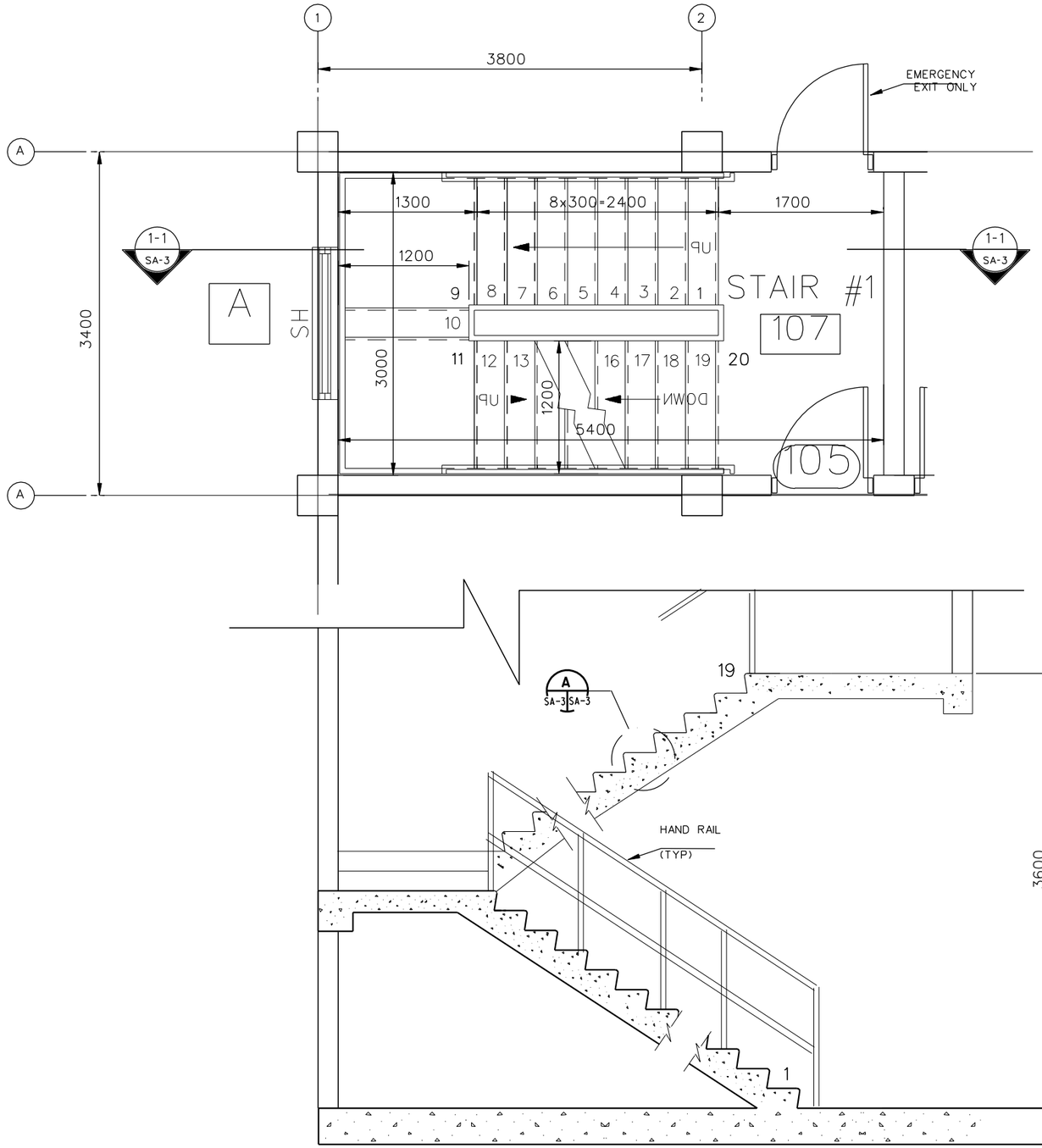

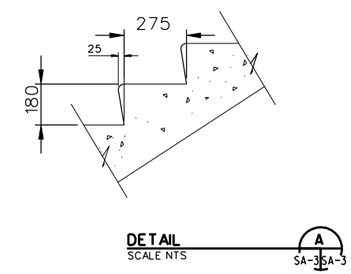

DETAIL
SCALE NTS

SECTION
SCALE=1 :25

NOTE

1- STAIR #1 AND #2 ARE IDENTICAL
2. SEE STRICTURE DRAWINGS FOR RE BAR DETAILS

1 .50 0 1 1.5
1:25

UNLESS OTHERWISE NOTED, LINEAR DIMENSIONS SHOWN ARE IN MILLIMETERS.

SYMBOL	DESCRIPTION	DATE	APP.

DESIGNED BY: S. Hanna
DWN BY: S. Hanna
CHK BY:
DATE: 02-05-07
SUBMITTED BY: PHILIP L. DINELLO, CHIEF, POST FACILITIES DEV.
FILE NO.: AF0701 $-AR03DT

US Army Corps of Engineers
Transatlantic Programs Center

AFGHAN NATIONAL POLICE HEADQUARTERS (2 STORY) COMPOUND
AFGHANISTAN
STANDARD DETAILS
WALL TYPES

SHEET REFERENCE NUMBER:
SA-3

3/9/2007
h:\projects\afghanistan\af0701\general\arc\af0701s-ar03dt.dwg

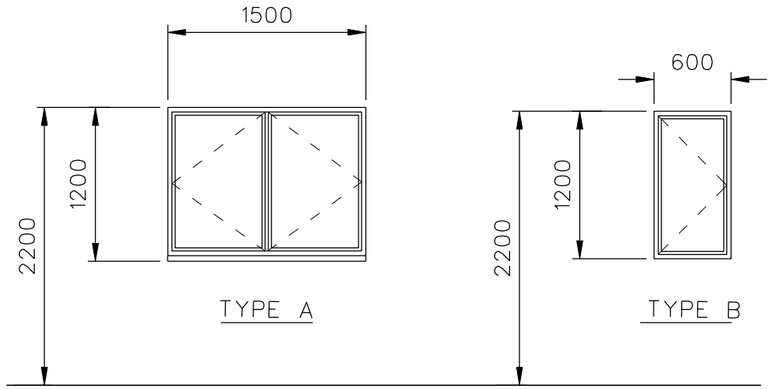

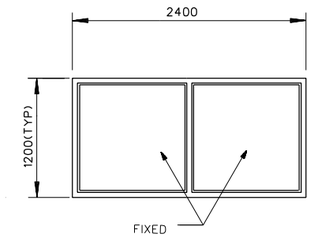

INTERIOR WINDOW TYPES

EXTERIOR WINDOW TYPES

NOTE
.ALL WINDOW SHALL HAVE INSLATED TEMPERED GLASS.

2. PROVIDE PROTECTIVE COATING AT ALL DISSIMILAR METALS CONTACT AREAS.WITH APPROPRIATE

3. ALL OPERABLE EXTERIOR WINDOWS SHALL BE PROVIDED WITH INSECT SCREENS.

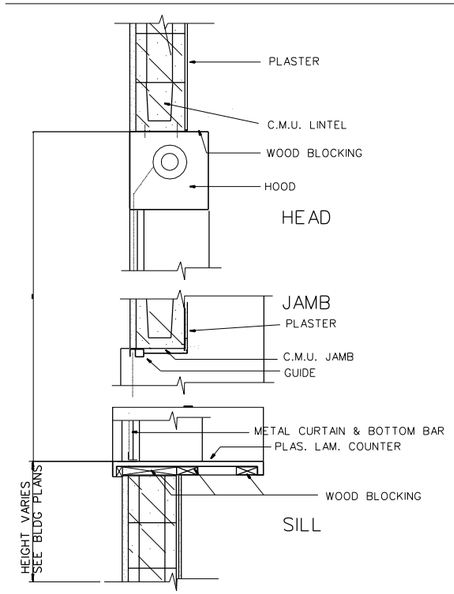

SECTION AT ROLL-UP COUNTER SHUTTER

SCALE 1:5

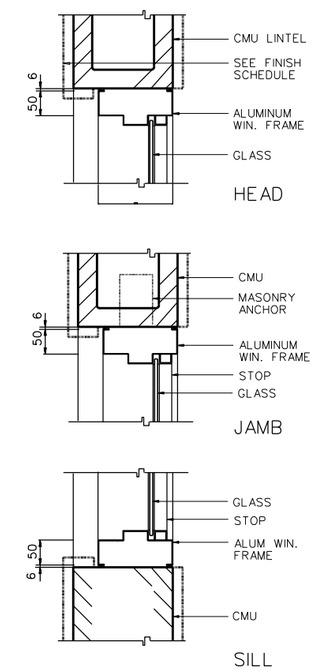

WINDOW SECTION AT CONC MASONRY WALL

SCALE 1:5

0 .10 .20 .30 .40 1
1:5

UNLESS OTHERWISE NOTED, LINEAR DIMENSIONS SHOWN ARE IN MILLIMETERS.

SYMBOL	DESCRIPTION	DATE	APP

DESIGNED BY: S. Hanna
DATE: 02-05-07
DWN BY: S. Hanna
SUBMITTED BY: PHILIP L. DINELLO, CHIEF, POST FACILITIES DEV.
CHK BY:
FILE NO.: AF0701 $-AR04EL

US Army Corps of Engineers
Transatlantic Programs Center

AFGHAN NATIONAL POLICE HEADQUARTERS (2 STORY) COMPOUND
AFGHANISTAN
STANDARD DETAILS
WINDOW DETAILES

SHEET REFERENCE NUMBER:
SA-4

3/9/2007
h:\projects\afghanistan\af0701\general\arc\af07013-ar0402.dwg

GENERAL NOTES

GENERAL

1. DESIGN REFERENCES:

   A. AMERICAN CONCRETE INSTITUTE (ACI) BUILDING CODE REQUIREMENTS FOR REINFORCED CONCRETE (ACI 318).

   B. SPECIFICATION FOR STRUCTURAL STEEL BUILDINGS - ALLOWABLE STRESS DESIGN AND PLASTIC DESIGN (S335).

   C. AMERICAN WELDING SOCIETY (AWS) STRUCTURAL WELDING CODE - STEEL (AWS D1.1).

   D. INTERNATIONAL BUILDING CODE (IBC-2003).

   E. BUILDING CODE REQUIREMENTS FOR MASONRY STRUCTURES (ACI 530-05).

   F. STEEL JOIST INSTITUTE (SJI) STANDARD SPECIFICATIONS, AND WEIGHT TABLES FOR STEEL JOIST AND JOIST GIRDERS.

   G. STEEL DECK INSTITUTE (SDI) DESIGN MANUAL FOR COMPOSITE DECKS, FORM DECKS, AND ROOF DECKS.

   H. MBMA MANUAL FOR LOW RISE BUILDINGS SYSTEMS.

2. DIMENSIONS PROVIDED IN SECTIONS OR DETAILS AND ON PLAN AND ELEVATION VIEWS ARE SHOWN USING MILLIMETERS, UNLESS OTHERWISE NOTED.

3. ALL BUILDING ELEVATIONS ARE GIVEN AS REFERENCE ELEVATIONS TO THE FINISHED GROUND FLOOR ELEVATION. A REFERENCE FLOOR ELEVATION OF 100.00 IS USED FOR THE FINISHED GROUND FLOOR.

4. CONTRACTOR SHALL VERIFY ALL DIMENSIONS AND CONDITIONS AFFECTING THE WORK AT THE JOB SITE.

5. ALL STRUCTURAL WORK AND MATERIALS SHALL CONFORM TO THE REQUIREMENTS OF THE PROJECT SPECIFICATIONS.

6. DO NOT SCALE DRAWINGS.

7. FOR LOCATION AND DIMENSIONS OF PARTITIONS, DEPRESSIONS, GROOVES, SLEEVES, CURBS, OPENINGS, EMBEDDED OR ATTACHED ITEMS, REFER TO ARCHITECTURAL, MECHANICAL, ELECTRICAL, AND PLUMBING DRAWINGS

8. FOR ADDITIONAL INFORMATION REFER TO INDIVIDUAL SHEETS FOR EACH STRUCTURE.

9. METAL BUILDING SYSTEMS SHALL BE AS REQUIRED IN THE SPECIFICATIONS.

10. FOOTING ELEVATIONS GIVEN ARE AT TOP OF FOOTING BASE.

11. ALL STRUCTURES SHALL BE FOUNDED ENTIRELY ON NATURAL MATERIAL OR ENTIRELY ON COMPACTED STRUCTURAL FILL, FOR STRUCTURES FOUNDED ON BEDROCK, PROVIDE A MEDIUM OF LEAN CONCRETE HAVING A MINIMUM 28-DAY COMPRESSIVE STRENGTH OF 14 MPA (2000 PSI) BETWEEN FOOTING BASES AND BEDROCK LAYER, AS REQUIRED.

12. ALL FOOTING EXCAVATIONS SHALL BE INSPECTED AND APPROVED BY THE CONTRACTING OFFICER OR HIS APPROVED AGENT PRIOR TO PLACING CONCRETE.

CONCRETE

1. EMBEDDED MATERIAL:

   A. BEFORE PLACING CONCRETE, CARE SHALL BE TAKEN TO INSURE THAT ALL EMBEDDED ITEMS ARE IN POSITION AND SECURELY FASTENED IN PLACE.

   B. ELECTRIC CONDUITS AND PIPING TO BE EMBEDDED IN CONCRETE SHALL MEET THE APPLICABLE REQUIREMENTS OF ACI 38.

   C. WATERSTOPS, WHERE REQUIRED, SHALL BE MADE CONTINUOUS, ALL PROJECTING WATERSTOPS SHALL BE SUPPORTED AND PROTECTED FROM DAMAGE DURING CONSTRUCTION.

2. PROVIDED 20 MILLIMETER CHAMFER FOR ALL EXPOSED EDGES OF COLUMNS, BEAMS, WALLS AND ANY OTHER MEMBERS AS DIRECTED BY THE CONTRACTING OFFICER.

3. EVERY INTERIOR SLAB-ON-GRADE SHALL HAVE ONE LAYER OF ASPHALT IMPREGNATED 30# BUILDING FELT BETWEEN THE SLAB AND ADJACENT WALL, UNLESS OTHERWISE NOTED.

4. PROVIDE APPROPRIATE DEPRESSION IN SLABS FOR TILE OR OTHER SIMILAR MATERIALS. MAINTAIN FULL SLAB THICKNESS BELOW THESE DEPRESSIONS. SEE ARCHITECTURAL INTERIOR FINISH SCHEDULES, FLOOR PLANS, AND DETAILS FOR REQUIRED DEPRESSIONS.

5. JOINTS SHALL BE LOCATED AS SHOWN ON DRAWINGS.

6. FOR SLABS ON GRADE, CONTROL JOINTS SHALL BE LOCATED NOT MORE THAN 7.6 METERS APART IN EITHER DIRECTION.

7. CONSTRUCTION JOINTS FOR STRUCTURAL SLABS, BEAMS AND GIRDERS SHALL BE LOCATED WITHIN THE MIDDLE THIRD OF THEIR SPAN. JOINTS IN GIRDERS SHALL BE OFFSET A MINIMUM DISTANCE OF TWO TIMES THE WIDTH OF AN INTERSECTING BEAM.

8. A SET OF DRAWINGS SHOWING CONCRETE PLACING SEQUENCE AND LOCATION OF JOINTS SHALL BE SUBMITTED TO THE CONTRACTING OFFICER FOR APPROVAL PRIOR TO PREPARATION OF AFFECTED REINFORCING SHOP DRAWINGS.

9. ALL REINFORCING BARS SHALL BE PLACED IN ACCORDANCE WITH ACI BUILDING CODE (ACI-318).

10. ALL REINFORCING BARS SHALL BE DEFORMED BILLET-STEEL CONFORMING TO ASTM A-615, GRADE 60 OR APPROVED EQUAL WITH THE FOLLOWING MINIMUM REQUIREMENTS: MINIMUM YIELD STRENGTH 413 MPa (60,000 PSI).

11. WELDED WIRE FABRIC SHALL BE COLD DRAWN CONFORMING TO ASTM A-185, GRADE 60, OR APPROVED EQUAL WITH THE FOLLOWING MINIMUM REQUIREMENTS: MINIMUM YIELD STRENGTH 413 MPa (60,000 PSI).

12. DETAILING OF REINFORCEMENT SHALL BE IN ACCORDANCE WITH THE LATEST ACI MANUAL FOR DETAILING (SP-66)

13. DIMENSION AND SPACING OF BARS ARE IN MILLIMETERS UNLESS OTHERWISE NOTED. THUS, # 19 X 300 LG.

14. CONCRETE SHALL HAVE A MINIMUM 28 DAY COMPRESSIVE STRENGTH OF 28 MPa (4,000 PSI) AND CONTAIN ASTM C-150 TYPE I CEMENT UNLESS OTHERWISE NOTED.

15. REINFORCEMENT MAY BE MOVED WITH APPROVAL OF THE CONTRACTING OFFICER TO CLEAR PIPES, SEALS, RECESSES, EMBEDDED METAL WORK AND CONDUITS.

16. CLEAR CONCRETE COVER FOR REINFORCING BARS IN CAST-IN-PLACE CONCRETE SHALL BE PROVIDED AS FOLLOWS, UNLESS OTHERWISE NOTED:

    A. FOOTINGS OR BEAMS CAST AGAINST AND PERMANENTLY EXPOSED TO EARTH: 75mm
    B. FORMED SURFACES EXPOSED TO WEATHER OR EARTH:
       (1) 16 BARS OR SMALLER: 40mm
       (2) ALL OTHERS: 50 mm
    C. FORMED SURFACES NOT EXPOSED DIRECTLY TO WEATHER OR EARTH:
       (1) SLABS, WALLS: 20mm
       (2) BEAMS, GIRDERS, COLUMNS:
       PRINCIPLE REINFORCEMENT, TIES OR STIRRUPS: 40mm

17. REINFORCEMENT SHALL BE CONTINUOUS THROUGH ALL CONSTRUCTION JOINTS, BUT DISCONTINUOUS AT ALL CONTROL JOINTS, UNLESS OTHERWISE INDICATED.

18. REINFORCING BARS SHALL NOT BE BENT OR STRAIGHTENED IN A MANNER THAT WILL INJURE THE MATERIAL. BARS WITH KINKS OR IMPROPER BENDS SHALL NOT BE USED.

19. THE FIRST AND LAST BAR IN SLABS AND WALLS SHALL BE PLACED AT A MAXIMUM OF ONE-HALF OF THE BAR SPACING SHOWN, UNLESS OTHERWISE NOTED.

20. THE CLEAR DISTANCE BETWEEN PARALLEL BARS IN A LAYER SHALL NOT BE LESS THAN THE NOMINAL DIAMETER OF THE BAR, NOR 25mm. THE CLEAR DISTANCE BETWEEN LONGITUDINAL BARS IN COLUMNS SHALL NOT BE LESS THAN 1.5 TIMES THE NOMINAL BAR DIAMETER NOR 40mm OF THE CURRENT AWS, D1.1, STRUCTURAL WELDING CODE - STEEL.

21. PROVIDE 1- # 13 REBAR IN MID-DEPTH OF SLAB AT ALL RE-ENTRANT CORNERS.

22. PROVIDE SEALANT INDICATED AT ALL CONTROL AND ISOLATION JOINTS. WHERE CONCRETE SLAB WORK WILL NOT BE COVERED BY SOME OTHER FINISH FLOOR MATERIAL, PROVIDE TOOLED CONTROL JOINTS HAVING A RADIUS OF 3mm.

STRUCTURAL STEEL

1. ALL METAL WORK SHOWN ON DRAWINGS SHALL BE FABRICATED OF STRUCTURAL STEEL UNLESS OTHERWISE NOTED.

2. DESIGN OF STRUCTURAL STEEL WORK SHALL BE IN ACCORDANCE WITH THE REQUIREMENTS OF THE SPECIFICATION FOR STRUCTURAL STEEL BUILDINGS - ALLOWABLE STRESS DESIGN AND PLASTIC DESIGN (S335).

3. ALL WELDING SHALL BE IN ACCORDANCE WITH THE APPLICABLE REQUIREMENTS OF THE CURRENT AWS, D1.1, STRUCTURAL WELDING CODE - STEEL.

4. WHERE WELD SIZE IS NOT CALLED OUT, USE AISC MINIMUM SIZE.

5. STRUCTURAL STEEL SHALL CONFORM TO THE REQUIREMENTS OF ASTM A500, GRADE B FOR STRUCTURAL TUBING AND ASTM A36 FOR OTHER STRUCTURAL SHAPES (UNLESS OTHERWISE NOTED).

6. ALL BOLTED CONNECTIONS SHALL BE BEARING TYPE CONNECTIONS MADE WITH #19 BOLTS MEETING REQUIREMENTS OF ASTM A36 FOR OTHER STRUCTURAL SHAPES (UNLESS OTHERWISE NOTED).

7. SHOP CONNECTIONS MAY BE BOLTED OR WELDED. ALL FIELD CONNECTIONS SHALL BE BOLTED UNLESS OTHERWISE SHOWN ON THE DRAWINGS.

8. UNLESS OTHERWISE NOTED, BEAM END CONNECTIONS SHALL CONFORM TO AISC STANDARD TWO ANGLE WEB CONNECTIONS, WHETHER BOLTED OR WELDED, EACH END CONNECTION SHALL BE CAPABLE OF SUPPORTING ONE-HALF THE TOTAL UNIFORM LOAD CAPACITY SHOWN IN THE ALLOWABLE UNIFORM LOAD TABLES. PART II OF THE AISC MANUAL OF STEEL CONSTRUCTION, HOLES WILL BE SHORT AND SLOTTED IN THE OUTSTANDING ANGLE LEGS (THOSE CONNECTED TO THE SUPPORTING MEMBER) AND STANDARD OTHERWISE.

SHAPE (MM)	MASS (Kgs/M)	BOLT ROWS N(MIN)	N(MAX)
W610	262-82	4	7
W530	248-66	4	6
W460	213-52	3	5
W410	149-39	3	4
W360	196-134	3	3
W360	122-64	2	3
W360	58-33	2	4
W310	129-60	2	3
W310	52-21	2	3
W250	167-49	2	2
W250	45-18	2	3
W200	100-36	2	2
W200	31-15	2	2

VALUES OF N ARE BASED ON ROW SPACING OF 75 MILLIMETERS AND AN EDGE DISTANCE OF 30 MILLIMETERS.

9. ALL ANCHOR BOLTS SHALL BE ASTM A36, EXCEPT AS OTHERWISE NOTED.

10. STRUCTURAL STEEL DESIGN IS BASED ON ALLOWABLE STRESS DESIGN.

UNLESS OTHERWISE NOTED, LINEAR DIMENSIONS SHOWN ARE IN MILLIMETERS.

SYMBOL	DESCRIPTION	DATE	APP

DESIGNED BY: RG
DATE: 02-05-07
DWN BY: TCP
SUBMITTED BY: PHILIP L. DINELLO, CHIEF, PDT FACILITIES DEV.
CHK BY: KGO
FILE NO.: AF0701 #-SB01GN

US Army Corps of Engineers
Transatlantic Programs Center

AFGHAN NATIONAL POLICE HEADQUARTERS (2 STORY) COMPOUND
AFGHANISTAN
STANDARD DETAILS
GENERAL NOTES

SHEET REFERENCE NUMBER:
SS-1

3/9/2007
h:\projects\afghanistan\af0701\general\str\AF0701#-sb01GN.dwg

LEGENDS AND NOTATIONS:

A. PLATE SIZES ARE GIVEN IN MILLIMETERS, THUS, PL 10 X 200 X 600.

B. ROLLED STEEL SHAPES ARE INDICATED BY AISC METRIC NOTATION THUS, W200 X 150.

C. ANGLE SIZES ARE GIVEN IN MILLIMETERS. THUS, L100 X 100 X 600 LG.

D. WELDING NOTATION SIZE, LENGTH AND SPACING ARE GIVEN IN MILLIMETERS WITH SYMBOLS IN ACCORDANCE WITH AWS.

E. BOLT SIZE AND LENGTH ARE GIVEN IN MILLIMETERS, THUS, Ø19 X 300 LG.

ABBREVIATIONS

A.B.	ANCHOR BOLT
ADD	ADDED OR ADDITIONAL
AFF	ABOVE FINISH FLOOR
ARCH	ARCHITECTURAL
@	AT THE RATE OF
BM	BEAM
BRG	BEARING
B OR BOT	BOTTOM
℄	CENTERLINE
CONC	CONCRETE
CJ	CONTROL JOINT
CJT	CONSTRUCTION JOINT
CIP	CAST-IN-PLACE
COL	COLUMN
CONT	CONTINUOUS
DIA OR Ø	DIAMETER
DIR	DIRECTION
DWG	DRAWING
EE	EACH END
EF	EACH FACE
⊕ OR ELEV	ELEVATION
ES	EACH SIDE
EW	EACH WAY
EJT	EXPANSION JOINT
FF	FAR FACE
FTG	FOOTING
FDN	FOUNDATION
GB	GRADE BEAM
H OR HORZ	HORIZONTAL
HP	HIGH POINT
IJ	ISOLATION JOINT
JT	JOINT
KSM	KILOGRAMS PER SQUARE METER
LG	LONG
LL	LOWER LAYER
LP	LOW POINT
MCJ	MASONRY CONTROL JOINT
M	METERS
MM	MILLIMETERS
MAX	MAXIMUM
MECH	MECHANICAL
MIN	MINIMUM
NF	NEAR FACE
NO OR #	NUMBER
NTS	NOT TO SCALE
O/C	ON CENTER
OPNG	OPENING
PC	PRECAST
PEJ	PRE MOLDED EXPANSION JOINT
PL	PLATE
PSF	POUNDS PER SQUARE FOOT
PSI	POUNDS PER SQUARE INCH
REINF	REINFORCEMENT
REF	REFERENCE
REQ	REQUIRED
SCH	SCHEDULE
SHT	SHEET
SIM	SIMILAR
STD	STANDARD
SQ	SQUARE
T	TOP
TB	TIE BEAM
T & B	TOP AND BOTTOM
TOC	TOP OF CONCRETE
TOF	TOP OF FOOTING
TOS	TOP OF SLAB OR TOP OF STEEL
TYP	TYPICAL
UL	UPPER LAYER
UON	UNLESS OTHERWISE NOTED
VERT	VERTICAL
WWF	WELDED WIRE FABRIC
WP	WORKING POINT
W/	WITH

SPLICES

LOCATION OF SOME SPLICES ARE SHOWN ON DRAWINGS. SPLICES NOT SHOWN ON DRAWINGS SHALL BE IN ACCORDANCE WITH THE APPLICABLE REQUIREMENTS FOR DETAILING REINFORCEMENT AND AS APPROVED BY THE CONTRACTING OFFICER.

WHEN REINFORCEMENT OF DIFFERENT SIZE SPLICES, THE LAP LENGTH IS GOVERNED BY THE SMALLER BAR UNLESS NOTED OTHERWISE.

WALL AND SLAB REINFORCEMENT SPLICES ARE TO BE MADE SO THAT REQUIRED CLEARANCES ARE MAINTAINED.

TENSION LAP SPLICES		
AS (PROVIDED) / AS (REQUIRED)	MAXIMUM % OF REBARS SPLICED WITHIN REQ. LAP LENGTH	
	50	100
EQUAL TO OR GREATER THAN 2	CLASS A	CLASS B
LESS THAN 2	CLASS B	CLASS B

TENSION LAP SPLICE LENGTH SHALL BE AS FOLLOWS:

TEFOR CLASS "A" SPLICES 1.0 ld
FOR CLASS "B" SPLICES 1.3 ld

WHERE ld IS THE BASIC TENSION DEVELOPMENT LENGTH.

BASIC TENSION DEVELOPMENT ld (mm)& TENSION DOWEL EMBEDMENT LENGTH

CONCRETE	TYPE OF BARS	BAR SIZE								
		#3	#4	#5	#6	#7	#8	#9	#10	#11
28 MPa	TOP BARS	400	500	600	700	800	1000	1200	1600	2000
	OTHER	300	400	450	600	600	750	950	1200	1500

NOTES:

1. FOR BARS WITH CLEAR SPACING NOT LESS THAN 5 TIMES BAR DIAMETER AND WITH COVER FROM FACE OF MEMBER TO EDGE BARS, MEASURED IN THE PLANE OF THE BARS, NOT LESS THAN 2.5 TIMES BAR DIAMETER USE 0.8 ID, BUT THE LAP SPLICE LENGTH SHALL NOT BE LESS THAN 300mm.
2. TOP BARS ARE HORIZONTAL AND INCLINED REINFORCING BARS PLACED SO THAT MORE THAN 300mm OF CONCRETE IS CAST IN THE MEMBER BELOW THE BARS.

STANDARD COMPRESSION LAP SPLICE LENGTH (MM)

BAR SIZE	#3	#4	#5	#6	#7	#8	#9	#10	#11
SPLICE LENGTH	300	380	480	580	660	760	860	960	1070

BASIC COMPRESSION DEVELOPMENT (MM) & COMPRESSION DOWEL EMBEDMENT LENGTH

CONCRETE	BAR SIZE								
	#3	#4	#5	#6	#7	#8	#9	#10	#11
4000 PSI	200	250	300	360	420	480	550	610	680

ALL BARS MARKED CONTINUOUS SHALL BE PROPERLY LAPPED AT SPLICES AND CORNERS AND HOOKED AT NON-CONTINUOUS ENDS.

DESIGN LOADS

SERVICE LOADS

DEAD ----------CALCULATED
LIVE ----------REFER TO INDIVIDUAL SHEETS

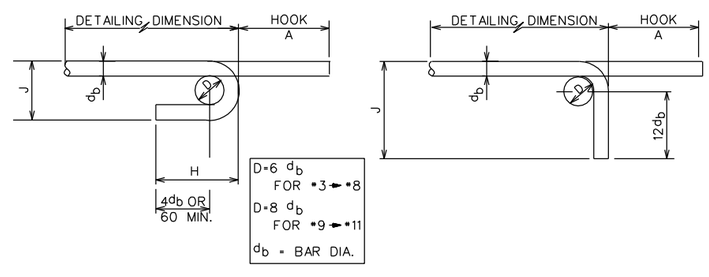

SIZES OF 180° HOOK			
BAR SIZE	A	J	APPROX H
# 3	130	80	100
# 4	150	100	110
# 5	180	130	130
# 6	200	150	150
# 7	250	180	180
# 8	280	200	200
# 9	380	290	260
#10	430	320	290
#11	480	360	320

SIZES OF 90° HOOK		
BAR SIZE	A	J
# 3	140	150
# 4	190	220
# 5	230	270
# 6	270	320
# 7	320	370
# 8	370	430
# 9	420	480
#10	470	580
#11	520	610

FILLET WELD STRENGTH *	
SIZE INCHES	STRENGTH KIPS/INCH
1/8	1.86
3/16	2.78
1/4	3.71
5/16	4.64
3/8	5.57
7/16	6.50
1/2	7.42
9/16	8.35

* AWS A5.1 OR A5.5 E70 XX ELECTRODES FOR A36 MATCHING BASE MATERIAL

BAR BENDING DETAILS

EQUIVALENT REINFORCING BAR SIZE CHART

ACI DESIGNATION	METRIC DIAMETER (MM)
# 3	Ø10
# 4	Ø13
# 5	Ø16
# 6	Ø19
# 7	Ø22
# 8	Ø25
# 9	Ø29
# 10	Ø32
# 11	Ø36

EQUIVALENT STEEL FABRIC SIZE CHART		
WIRE REINFORCING INSTITUTE DESIGNATION	METRIC SIZES (MM)	
	WIRE SPACING	WIRE DIAMETER
6 x 6 - W1.4 x W1.4	150 x 150	3.0 x 3.0
6 x 6 - W2.1 x W2.1	150 x 150	4.0 x 4.0
6 x 6 - W2.9 x W2.9	150 x 150	5.0 x 5.0
6 x 6 - W4.0 x W4.0	150 x 150	6.0 x 6.0

UNLESS OTHERWISE NOTED, LINEAR DIMENSIONS SHOWN ARE IN MILLIMETERS.

SYMBOL	DESCRIPTION	DATE	APR

DESIGNED BY: RG
DWN BY: TCP
CHK BY: KGO
DATE: 02-05-07
SUBMITTED BY: PHILIP L. DINELLO, CHIEF, POST FACILITIES DEV.
FILE NO.: AF0701 $-SB02GN

US Army Corps of Engineers
Transatlantic Programs Center

AFGHAN NATIONAL POLICE HEADQUARTERS (2 STORY) COMPOUND
AFGHANISTAN
STANDARD DETAILS
NOTATIONS AND BAR DEVELOPMENT LENGTHS

SHEET REFERENCE NUMBER:
SS-2

3/9/2007
h:\projects\afghanistan\af0701\general\str\AF0701$-sb02gn.dwg

MASONRY LINTEL SCHEDULE			
OPENING WIDTH	NOMINAL SIZE	REBAR BOTTOM	DETAIL
0-1800	200X200	2-Ø13	A
1800-2000	200X200	2-Ø16	A
2000-2200	200X200	2-Ø19	A
2200-4000	200X400	2-Ø13	B
4000-4400	200X400	2-Ø16	B
4400-4600	200X400	2-Ø19	B
0-1350	150X200	1-Ø13	C

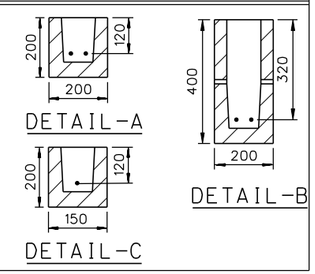

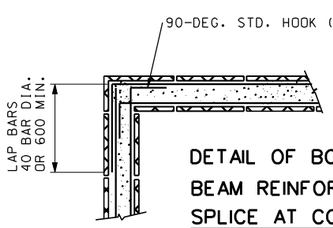

DETAIL OF BOND BEAM REINFORCING SPLICE AT CORNER
N.T.S.

DETAIL A
SCALE=N.T.S.
SS-3 SS-3

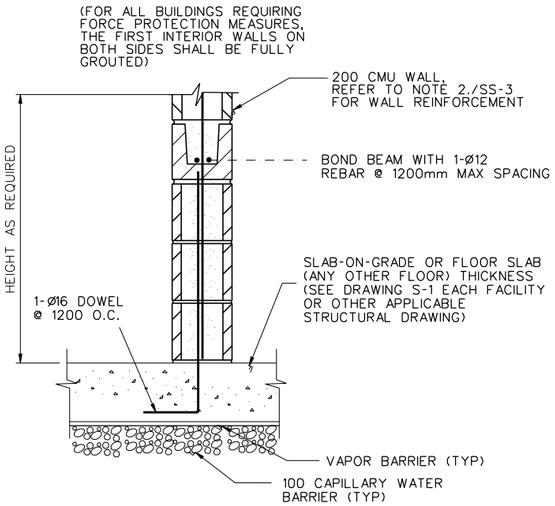

INTERIOR WALL DETAIL
SCALE: 1:10

DETAIL B
SCALE=N.T.S.
SS-3 SS-3

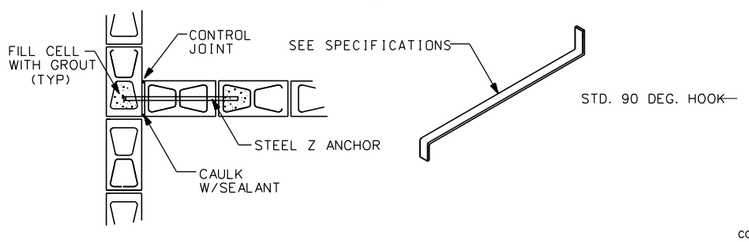

INTERSECTION OF WALLS OR PARTITIONS
SEE NOTES 10 AND 11

DETAIL C
SCALE=N.T.S.
SS-3 SS-3

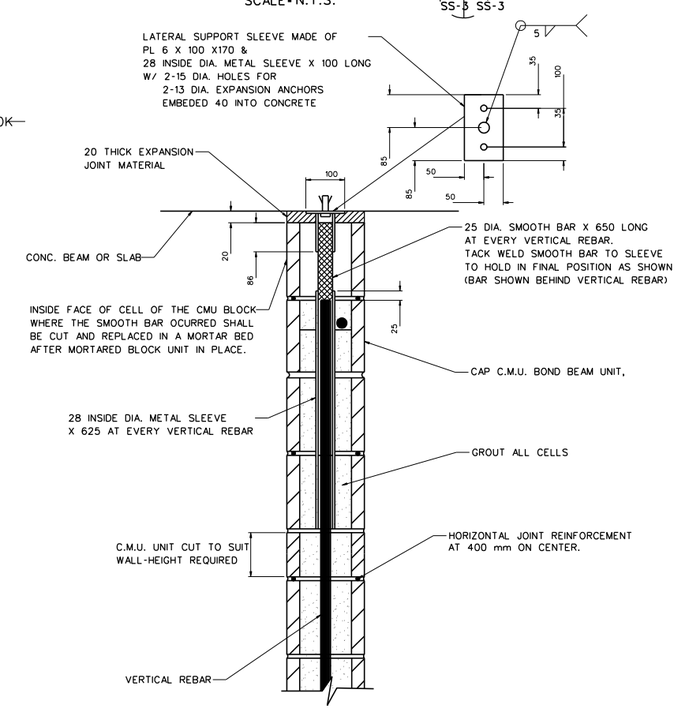

TOP LATERAL SUPPORT FOR C.M.U. EXTERIOR WALLS

DETAIL E
SCALE=N.T.S.
SS-3 SS-3

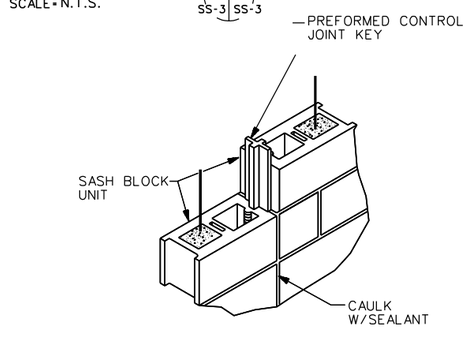

MASONRY CONTROL JOINT DETAILS

DETAIL D
SCALE=N.T.S.
SS-3 SS-3

DETAIL F
SCALE=N.T.S.
SS-3 SS-3

MASONRY NOTES:

1. WORK THIS SHEET WITH ARCHITECTURAL SHEETS.
2. EXCEPT AS AND WHERE SPECIFICALLY NOTED OR INDICATED ON THE DRAWINGS, VERTICAL AND HORIZONTAL REINFORCEMENT FOR THE CMU WALLS SHALL BE AS FOLLOWS:
   A. 200 CMU WALLS
      1. ø19 @ 600 VERTICAL AT EXTERIOR WALLS
      2. ø19 @ 1000 VERTICAL AT INTERIOR WALLS
      3. 9 GAGE SIDE RODS @ 400 LADDER TYPE HORIZONTAL JOINT REINFORCEMENT
      4. 1- ø13 BOND BEAMS @ 1000
      5. 2- ø13 AT CAP-BOND BEAMS
3. IN ADDITION TO JOINT REINFORCEMENT IDENTIFIED FOR PLACEMENT IN NOTE 2 ABOVE, PROVIDE JOINT REINFORCEMENT ADJACENT TO SILLS AND HEADS OF ALL OPENINGS HAVING A MASONRY WIDTH GREATER THAN 1.60 METERS. EXTEND (OR OTHERWISE ANCHOR) SUCH REINFORCEMENT A MINIMUM OF 600 MILLIMETERS BEYOND EACH FACE OF OPENING.
4. DISCONTINUE BOND BEAM AND JOINT REINFORCEMENT AT MASONRY CONTROL JOINTS UNLESS OTHERWISE NOTED.
5. UNLESS NOTED OTHERWISE, PROVIDE A MINIMUM OF 2- ø13 REBAR IN LINTEL BEAMS SPANNING MASONRY OPENINGS HAVING A WIDTH GREATER THAN ONE METER. EXTEND (OR OTHERWISE ANCHOR) SUCH REINFORCEMENT A MINIMUM OF 600 MILLIMETERS BEYOND EACH FACE OF OPENING.
6. WHERE REINFORCEMENT FOR A BOND BEAM AND LINTEL ARE ALIGNED WITHIN A MINIMUM OF 600 MILLIMETERS BEYOND EACH FACE OF OPENING. A MASONRY COURSING EXTEND (OR OTHERWISE ANCHOR) REBAR FOR THE LINTEL
7. PROVIDE A MASONRY BOND TO INTERSECTING LOAD-BEARING WALLS AT CORNERS ONLY. WHERE A LOAD-BEARING WALL TERMINATES AT THE FACE OF ANOTHER LOAD-BEARING WALL, PROVIDE A CONTROL JOINT. FOR LATERAL SUPPORT BETWEEN SUCH WALLS PROVIDE STEEL TIE BARS, SPACED NOT MORE THAN 800 MM ON CENTER VERTICALLY.
8. IN ADDITION TO THE VERTICAL REINFORCEMENT INDICATED ON WALL DETAILS FOR PLACEMENT, PROVIDE 1 - ø13 REBAR ADJACENT TO SIDES OF MASONRY OPENINGS.
9. CMU BLOCK DETAILS SHALL MATCH DETAILING OF EXISTING BUILDINGS ON SITE.
10. THERE SHALL BE A FOUNDATION DOWEL FOR EACH VERTICAL REINFORCING BAR. FOUNDATION DOWELS SHALL EXTEND A MINIMUM OF 30 DIAMETERS INTO THE THE FOUNDATION CONCRETE, AND 40 DIAMETERS OR 600 MINIMUM INTO THE MASONRY WALL. LAPS OR SPLICES OF REINFORCING STEEL IN MASONRY SHALL BE 40 DIAMETERS OR 600 MINIMUM.
11. PROVIDE MASONRY CONTROL JOINT LOCATIONS WITHOUT CUTTING BLOCK. MAXIMUM SPACING OF CONTROL JOINTS SHALL BE 7.2 METERS.
12. ALL CELLS OF EXTERIOR WALLS SHALL BE FULLY GROUTED.

STEEL ANGLE LINTEL SCHEDULE FOR 100 THICK C.M.U. OR BRICK VENEER WALLS	
OPNG. WIDTH	STEEL ANGLE SIZE
UP TO 1.22 M.	L 89X89X6.4
UP TO 1.52 M.	L 102X89X6.4
UP TO 1.98 M.	L 127X89X7.9
UP TO 2.44 M.	L 152X89X9.5

NOTE:

1. PROVIDE 150 MINIMUM BEARING AT EACH END OF OPENING.
2. USE L 152X89X9.5 FOR OPENING UP TO 4.30 M. AT MECH. LOUVERS OPENINGS IN MAIN TERMINAL BUILDING.

0 .50 1.00
1:10
UNLESS OTHERWISE NOTED, LINEAR DIMENSIONS SHOWN ARE IN MILLIMETERS.

SYMBOL	DESCRIPTION	DATE	APP.

DESIGNED BY: RG
DATE: 02-05-07
DWN BY: TCP
SUBMITTED BY: PHILIP L. DINELLO, CHIEF, POST FACILITIES DEV.
CHK BY: KGO
FILE NO.: AF0701 S-SB03DT

US Army Corps of Engineers
Transatlantic Programs Center

AFGHAN NATIONAL POLICE HEADQUARTERS (2 STORY) COMPOUND
AFGHANISTAN
STANDARD DETAILS
MASONRY DETAILS

SHEET REFERENCE NUMBER:
SS-3

3/9/2007
h:\projects\afghanistan\af0701\general\str\AF0701S-sb03dt.dwg

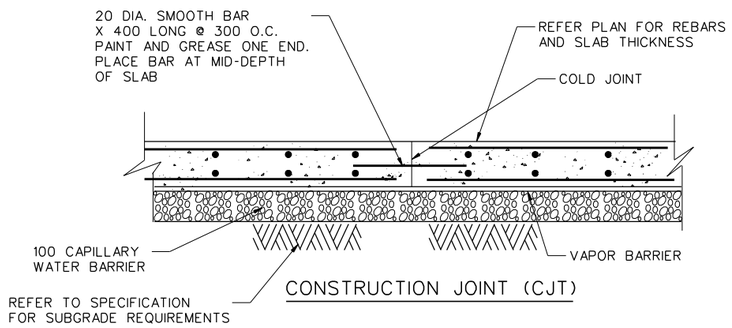

CONSTRUCTION JOINT (CJT)

DETAIL A
SCALE • N.T.S. SS-4 SS-4

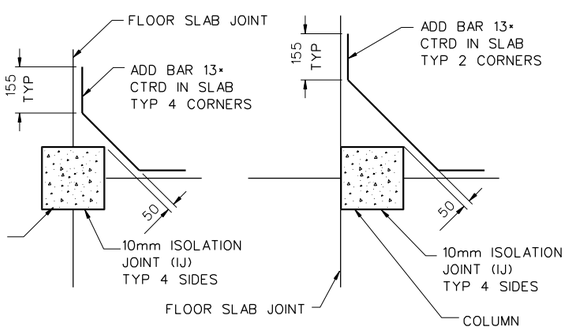

TYPICAL SLAB JOINT DETAIL AROUND COLUMNS

DETAIL C
SCALE • N.T.S. SS-4 SS-4

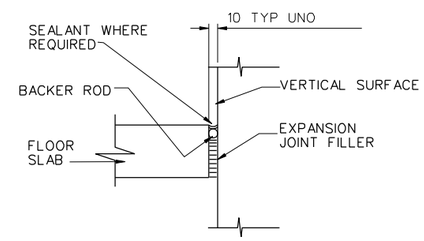

TYPICAL SLAB ISOLATION
JOINT (IJ) DETAIL
NTS

DETAIL C
SCALE • N.T.S. SS-4 SS-4

UNLESS OTHERWISE NOTED, LINEAR DIMENSIONS SHOWN ARE IN MILLIMETERS.

SYMBOL	DESCRIPTION	DATE	APP

DESIGNED BY: RG
DATE: 02-05-07
DWN BY: TCP
SUBMITTED BY: PHILIP L. DINELLO CHIEF, POST FACILITIES DEV.
CHK BY: KGO
FILE NO.: AF0701 S-SB04DT

US Army Corps of Engineers
Transatlantic Programs Center

AFGHAN NATIONAL POLICE HEADQUARTERS (2 STORY) COMPOUND
AFGHANISTAN
STANDARD DETAILS
SLAB-ON-GRADE DETAILS

SHEET REFERENCE NUMBER:
SS-4

3/9/2007
h:\projects\afghanistan\af0701\general\str\AF0701S-sb04dt.dwg

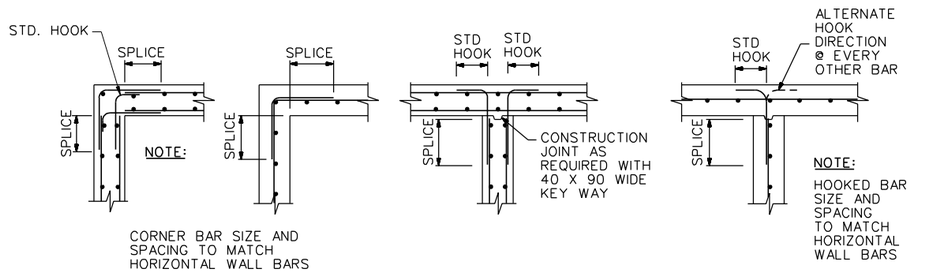

AT CORNERS

AT INTERSECTIONS

TYPICAL WALL AND GRADE BEAM REINFORCEMENT DETAILS

DETAIL A SS-5 | SS-5
SCALE • N.T.S.

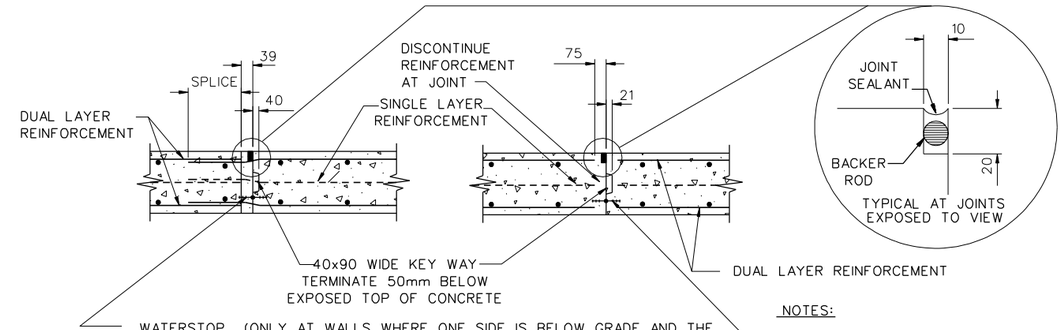

CONSTRUCTION JOINT (CJ)

CONTROL JOINT (CIJ)

NOTES:

1. USE FOR VERTICAL OR HORIZONTAL JOINTS.

2. PROVIDE CONTROL JOINT IN WALLS EXPOSED TO VIEW AT A MAXIMUM SPACING OF 7500 mm. COORDINATE JOINT LOCATIONS WITH THE CONTRACTING OFFICER.

TYPICAL WALL JOINTS

NTS

DETAIL B SS-5 | SS-5
SCALE • N.T.S.

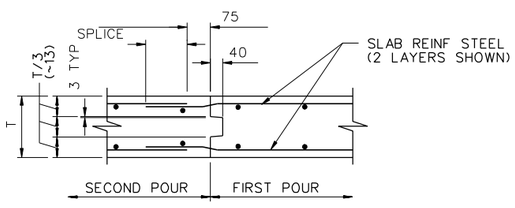

NOTE:

1. LOCATE CONSTRUCTION JOINTS BETWEEN ¼ TO 1/3 POINT OF THE SLAB SPAN. ALL CONSTRUCTION JOINT LOCATIONS NOT SPECIFICALLY INDICATED SHALL BE APPROVED BY THE CONTRACTING OFFICER PRIOR TO CONSTRUCTION.

2. AT CONTRACTORS OPTION, STANDARD LAP MAY BE OMITTED BY PROVIDING CONTINUOUS REINFORCEMENT.

IN SLABS

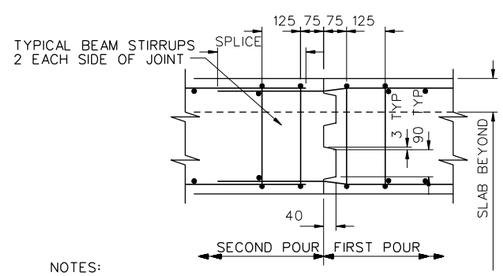

NOTES:
1. PROVIDE ONE KEY WAY FOR EACH 300 mm OR FRACTION OF BEAM DEPTH DISCONTINUE KEY WAY AT A DISTANCE OF 60mm FROM EXPOSED SURFACES.

2. LOCATE CONSTRUCTION JOINTS BETWEEN ¼ TO 1/3 POINT OF THE SPAN ALL CONSTRUCTION JOINT LOCATIONS NOT SPECIFICALLY INDICATED SHALL BE APPROVED BY THE CONTRACTING OFFICER PRIOR TO CONSTRUCTION.

3. AT CONSTRUCTION OPTION STANDARD LAP MAY BE OMITTED BY PROVIDING CONTINUOUS REINFORCEMENT.

IN JOISTS, BEAMS AND GIRDERS

TYPICAL ELEVATED SLAB SYSTEM CONSTRUCTION JOINT DETAILS

NTS

DETAIL C SS-5 | SS-5
SCALE • N.T.S.

0 .50 1.00
1:10

UNLESS OTHERWISE NOTED, LINEAR DIMENSIONS SHOWN ARE IN MILLIMETERS.

SYMBOL	DESCRIPTION	DATE	APP.

DESIGNED BY: RG
DATE: 02-05-07
DWN BY: TCP
SUBMITTED BY: PHILIP L. DINELLO CHIEF, POST FACILITIES DEV.
CHK BY: KGO
FILE NO.: AF0701 $-SB05DT

US Army Corps of Engineers
Transatlantic Programs Center

AFGHAN NATIONAL POLICE HEADQUARTERS (2 STORY) COMPOUND
AFGHANISTAN
STANDARD DETAILS
JOINT DETAILS

SHEET REFERENCE NUMBER:
SS-5

3/9/2007
h:\projects\afghanistan\af0701\general\str\AF0701$-sb05DT.dwg

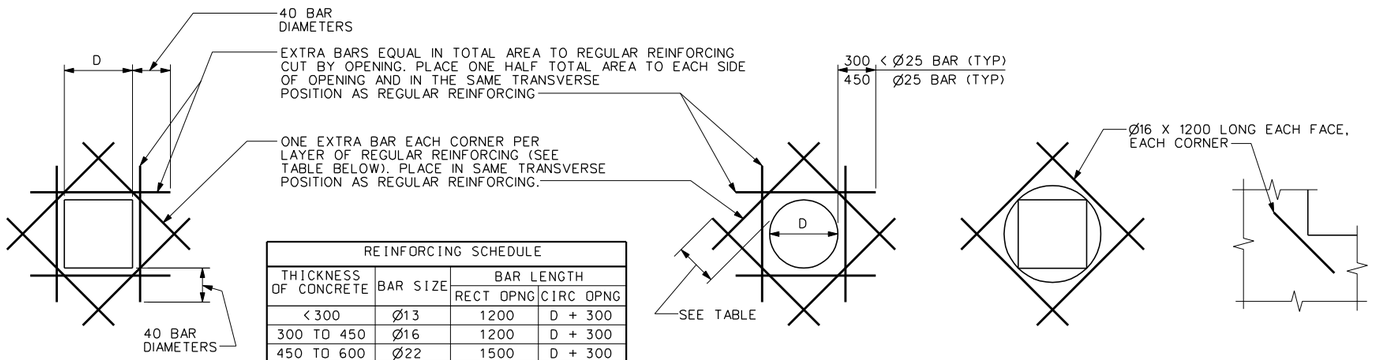

REINFORCING SCHEDULE			
THICKNESS OF CONCRETE	BAR SIZE	BAR LENGTH	
		RECT OPNG	CIRC OPNG
< 300	Ø13	1200	D + 300
300 TO 450	Ø16	1200	D + 300
450 TO 600	Ø22	1500	D + 300
>600	Ø25	1800	D + 450

RECTANGULAR OPENINGS

CIRCULAR OPENINGS

FOR OPENINGS 500 AND SMALLER IN DIAMETER OR DIAGONAL

ISOLATED RE-ENTRANT CORNERS

FOR OPENING LARGER THAN 500 IN DIAMETER OR DIAGONAL

TYPICAL EXTRA REINFORCING AT OPENINGS IN WALLS AND SLABS

DETAIL A SS-6 | SS-6
SCALE = N.T.S.

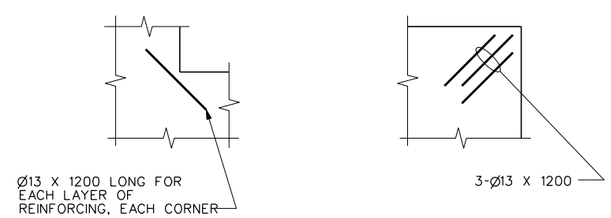

RE-ENTRANT CORNERS

EXTERIOR CORNERS

TYPICAL EXTRA REINFORCING IN SLABS ON GRADE

DETAIL B SS-6 | SS-6
SCALE = N.T.S.

UNLESS OTHERWISE NOTED, LINEAR DIMENSIONS SHOWN ARE IN MILLIMETERS.

SYMBOL	DESCRIPTION	DATE	APP

DESIGNED BY: RG
DATE: 02-05-07
DWN BY: TCP
SUBMITTED BY: PHILIP L. DINELLO, CHIEF, POST FACILITIES DEV.
CHK BY: KGO
FILE NO.: AF0701 S-SB06DT

US Army Corps of Engineers
Transatlantic Programs Center

AFGHAN NATIONAL POLICE HEADQUARTERS (2 STORY) COMPOUND
AFGHANISTAN
STANDARD DETAILS
EXTRA REINFORCING AT OPENINGS AND CORNERS

SHEET REFERENCE NUMBER:
SS-6

3/9/2007
h:\projects\afghanistan\af0701\general\str\AF0701S-sb06dt.dwg

PIPING LEGEND

SYMBOL	DESCRIPTION
	THREE-WAY VALVE (ANY TYPE OF OPERATOR)
	GATE VALVE
	BALL VALVE
	GLOBE VALVE
	ANGLE GLOBE VALVE
	PRESSURE RELIEF VALVE
	PRESSURE-TEMPERATURE RELIEF VALVE
	BALANCING COCK
	BUTTERFLY VALVE
	CHECK VALVE
	UNION (SCREWED)
	PRESSURE CONTROL VALVE (SELF-CONTAINED)
S	SOLENOID VALVE
M	MOTOR OPERATED CONTROL VALVE
	AIR ELIMINATOR
AAV	AIR VENT, AUTOMATIC
	AIR VENT, MANUAL
	BACK PRESSURE VALVE
	PRESSURE REDUCING VALVE
	"Y" STRAINER
	AIR VALVE
	TEMPERATURE REGULATING VALVE
	EXPANSION VALVE, HAND
	EXPANSION VALVE, THERMOSTATIC
T	THERMOMETER, DIAL TYPE
T	THERMOMETER, VERTICAL TYPE
P	PRESSURE GAGE
	RISER DOWN (ELBOW)
	RISER UP (ELBOW)
	PITCH DOWN IN DIRECTION OF FLOW
	RISE OR DROP
— CHS —	CHILLED WATER SUPPLY
— CHR —	CHILLED WATER RETURN
— C —	CONDENSATE DRAIN

SYMBOL	DESCRIPTION
	BRANCH CONNECTION OUT OF TOP
	BRANCH CONNECTION OUT OF BOTTOM
	BRANCH CONNECTION OUT OF SIDE
	CAP ON END OF PIPE
	CONCENTRIC REDUCER
	ECCENTRIC REDUCER
	ANCHOR POINT
	FLEXIBLE CONNECTION
FS	FLOW SWITCH
	EXPANSION JOINT
	FLUSH VALVE
HB / HB	HOSE BIBB
	WATER FIXTURE
	MIXING FAUCET COLD & HOT WATER
DV	DRAIN VALVE
	SIGHT GLASS
FM	FLOW METER
	PET COCK
	FLOW DIRECTION
	INLINE-PUMP
	CALIBRATED BALANCE VALVE
T	AQUASTAT
M	MOTOR OPERATED BUTTERFLY VALVE

FACILITY DESIGNATION	
A	HEADQUARTERS
B,C	FUTURE BUILDINGS
D	GUARD HOUSE
E	GUARD TOWER
F	GUARD SHACK
H	WELL HOUSE
I	PUMP ROOM

* NO MECHANICAL WORK IN 'G' & 'J' FACILITIES

ABBREVIATIONS

AAV	AIR VENT AUTOMATIC
AC	AIR CURTAIN FAN
ACMH	ACTUAL CUBIC METERS PER HOUR
ACC	AIR COOLED CHILLER
ACCU	AIR COOLED CONDENSING UNIT
AF	AIR FILTER
AFF	ABOVE FINISHED FLOOR
AD	AREA DRAIN
AHU	AIR HANDLING UNIT
AP	ACCESS PANEL
BF	BOTTOM FLAT
BD	BALANCING DAMPER
BDD	BACKDRAFT DAMPER
BFP	BACKFLOW PREVENTER
BHP	BRAKE HORSEPOWER
BOD	BOTTOM OF DUCT
°C	DEGREES CELSIUS
CD	CEILING DIFFUSER
CHW	CHILLED WATER
CLG	CEILING
CM	CENTIMETER
CMH	CUBIC METER PER HOUR
CONN	CONNECTION
CONT	CONTINUATION
CW	CHILLED WATER COOLING COIL
D	DROP/DEPTH
DB	DRY BULB
DET	DETAIL
DIA	DIAMETER
DH	DUCT HEATER
DIFF	DIFFERENTIAL
DG	DOOR GRILLE
DN	DOWN
DWG	DRAWING
DX	DIRECT EXPANSION
EA	EXHAUST AIR
EAT	ENTERING AIR TEMPERATURE
EDB	ENTERING DRY BULB
EDH	ELECTRIC DUCT HEATER
EF	EXHAUST FAN
EG	EXHAUST GRILLE
EL	ELEVATION
ELEC	ELECTRICITY/ELECTRICAL
EQUIP	EQUIPMENT
ER	EXHAUST REGISTER
EWB	ENTERING WET BULB
EWH	ELECTRIC WATER HEATER
EWT	ENTERING WATER TEMPERATURE
EXH	EXHAUST
EXT	EXTERNAL/EXTERIOR
FCO	FLOOR CLEAN OUT
FCU	FAN COIL UNIT
FCV	FLOW CONTROL VALVE
FD	FLOOR DRAIN/FIRE DAMPER
FIN	FINISHED
FL	FLOOR
FS	FLOOR SINK
FSD	COMBINATION FIRE/SMOKE DAMPER
GA	GAUGE
HB	HOSE BIBB
HC	HEATING COIL
HORIZ	HORIZONTAL
HP	HORSEPOWER
HR	HOUR
HVAC	HEATING, VENTILATING & AIR CONDITIONING
HZ	HERTZ
ID	INSIDE DIAMETER
IH	INTAKE HOOD
IS	INERTIAL SEPARATOR
INV.EL.	INVERT ELEVATION
KG	KILOGRAM
KH	KITCHEN HOOD
KW	KILOWATT
KPa	KILO PASCALS
LAT	LEAVING AIR TEMPERATURE
LAV	LAVATORY
LFACP	LOCAL FIRE ALARM CONTROL PANEL
LPM	LITERS PER MINUTE
LPH	LITERS PER HOUR
LS	LEVEL SWITCH
LVG	LEAVING
LVR	LOUVER
M	METER
M^2	SQUARE METER
M^3	CUBIC METER
MAX	MAXIMUM
MECH	MECHANICAL
MIN	MINIMUM
MISC	MISCELLANEOUS
MM	MILLIMETER
MVD	MANUAL VOLUME DAMPER
NC	NORMALLY CLOSED
NFPA	NATIONAL FIRE PROTECTION ASSOCIATION
NO	NORMALLY OPEN/NUMBER
NOM	NOMINAL
NTS	NOT TO SCALE
OA	OUTSIDE AIR
OC	ON CENTER
OD	OVERFLOW DRAIN
OI	OIL INTERCEPTOR
ϕ	PHASE
P	PUMP
PD	PRESSURE DIFFERENTIAL
PRESS	PRESSURE
PRV	PRESSURE REDUCING VALVE
PS	PRESSURE SWITCH
QTY	QUANTITY
R	RISE
RA	RETURN AIR
RC	REFRIGERATION COOLER
RD	ROOF DRAIN
REQD	REQUIRED
RF	RETURN FAN
RG	RETURN GRILLE
RH	RELATIVE HUMIDITY
RL	REFRIGERANT LIQUID
RM	ROOM
RPM	REVOLUTIONS PER MINUTE
RR	RETURN REGISTER
RS	REFRIGERANT SUCTION
S	SOIL/SOUTH/SECOND
SA	SUPPLY AIR
SD	SUPPLY AIR DIFFUSER
SENS	SENSIBLE
SF	SUPPLY FAN
SG	SUPPLY GRILLE
SH	SHEET
SMACNA	SHEET METAL AND AIR CONDITIONING CONTRACTORS NATIONAL ASSOCIATION
SOV	SHUT-OFF VALVE
SP	STATIC PRESSURE
SQ FT	SQUARE FOOT/SQUARE FEET
SR	SUPPLY REGISTER
SST	SATURATED SUCTION TEMPERATURE
TCP	TEMPERATURE CONTROL PANEL
TCV	TEMPERATURE CONTROL VALVE
TEMP	TEMPERATURE
TG	TRANSFER GRILLE
TK	TANK
TP	TRAP PRIMER
TYP	TYPICAL
UC	UNDERCUT DOOR
UL	UNDERWRITER'S LABORATORIES
V	VOLTS
VEL	VELOCITY
VH	VENT HOOD
WCCU	WATER COOLED CONDENSING UNIT
WG	WATER GAGE

GENERAL NOTES:

1. SEE ARCHITECTURAL DRAWINGS FOR EXACT LOCATION OF LOUVERS, EQUIPMENT PADS AND SUPPORT PLATFORMS.
2. SEE ARCHITECTURAL REFLECTED CEILING PLAN FOR EXACT LOCATION OF DIFFUSERS, REGISTERS, AND GRIILLES.
3. INSULATE DUCTWORK AND REFRIGERANT PIPING SYSTEMS IN ACCORDANCE WITH SPEC. SECTION 01015, THERMAL INSULATION FOR MECHANICAL SYSTEMS.
4. ALL DIMENSIONS SHOWN IN mm UNLESS INDICATED OTHERWISE.
5. ALL DUCT DIMENSIONS SHOWN ON THE DRAWINGS ARE CLEAR INSIDE DIMENSIONS.
6. MOUNT WALL THERMOSTATS 1.5M ABOVE FINISHED FLOOR.
7. OUTDOOR CONDENSING UNITS SHALL BE INSTALLED ON 300 HIGH STEEL PLATFORM ON A CONCRETE PAD AND PROVIDED WITH VIBRATION PADS.

CONTROL LEGEND

SYMBOL	DESCRIPTION
M	MOTORIZED CONTROL DAMPER
	CONTROL CONNECTION
S/S	START/STOP CONTROL
H	HUMIDISTAT, TWO POSITION
Hm	HUMIDISTAT, MODULATING
H	HUMIDITY SENSOR
SD	SMOKE DETECTOR
T_2	THERMOSTAT, TWO POSITION
T	SPACE THERMOSTAT
FS	FLOW SWITCH
TI	TEMPERATURE INDICATOR
T_S	SPACE TEMPERATURE SENSOR

EQUIPMENT DESIGNATION

EH	ELECTRICAL CABINET HEATER
PH	PROPANE SPACE HEATER
CF	CEILING FAN
OWF	OSOLATING WALL FAN
UH	UNIT HEATER
AC	AIR CONDITIONING UNIT
CU	CONDENSING UNIT
EF	EXHAUST FAN

SYMBOL	DESCRIPTION	DATE	APP.

DESIGNED BY: RMS
DATE: 02-05-07
DWN BY: RMS
SUBMITTED BY: SYED EMAYATULLA CHIEF, PDT BLDG SYSTEMS
CHK BY: SE
FILE NO.: AF0701 S-MHOIGN

US Army Corps of Engineers
Transatlantic Programs Center

AFGHAN NATIONAL POLICE HEADQUARTERS (2 STORY) COMPOUND
AFGHANISTAN
STANDARD DETAILS
LEGENDS AND ABBREVIATIONS

SHEET REFERENCE NUMBER:
SM-1

3/9/2007
h:\projects\afghanistan\af0701\general\mec\AF0701S-MHOIGN.DWG

SPLIT SYSTEM SCHEDULE (CU A-X / AC A-X)

EQUIPT. NO.	LOCATION	CAPACITY COOL/HEAT	SEER	AIR QUNTITY CMH	ELECTRICAL DATA W	VOLTS	PH	HZ	CONTROL DIAGRAM	COP	REMARKS
AC-A-1, AC-A-3	DY. CHIEF OFFICE	2.3/2.5KW	10	474	750	220	1	50	SEE SPEC.	2.9	HIGH WALL MOUNTED. PROVISION FOR FRESH AIR THROUGH MOVABLE LOUVERS.
AC-A-2, AC-A-4	CHIEF OFFICE	2.6/3.0KW	10	474	900	220	1	50	SEE SPEC.	2.9	HIGH WALL MOUNTED. PROVISION FOR FRESH AIR THROUGH MOVABLE LOUVERS.

EXHAUST FAN SCHEDULE (EF A-X)

EQUIPT. NO.	LOCATION	AIR QUANTITY CMH	S.P. MM-W.G.	FAN TYPE	ELECTRICAL DATA HP	VOLTS	PH	HZ	CONTROL DIAGRAM	SOUND POWER dWA	REMARKS
EF-A-1, 3, & 7	TOILET ROOMS	170	7	CEILING CABINET	80 WATTS	220	1	50	E1	50	CEILING MOUNTED WITH GRAVITY BACKDRAFT DAMPER AND CEILING GRILE
EF-A-2	MEN'S TOILET	170	7	CEILING CABINET	80 WATTS	220	1	50	E3	50	CEILING MOUNTED WITH GRAVITY BACKDRAFT DAMPER AND CEILING GRILE
EF-A-4, 5, 8, & 9	MEN'S TOILET	510	7	WALL CENTRIFUGAL	1/12	220	1	50	E2	50	WALL MOUNTED WITH BACKDRAFT DAMPER
EF-A-6	WOMEN'S TOILET	400	7	WALL CENTRIFUGAL	1/12	220	1	50	E2	50	WALL MOUNTED WITH BACKDRAFT DAMPER
EF-A-10	UTILITY STORAGE	400	7	WALL CENTRIFUGAL	1/12	220	1	50	E4	50	WALL MOUNTED WITH BACKDRAFT DAMPER
EF-A-11	KITCHEN	3,300	14	WALL CENTRIFUGAL	3/4	220	1	50	E3	65	RATED FOR 175° C AND KITCHEN HOOD
EF-A-12	KITCHEN	1,700	8	WALL CENTRIFUGAL	1/4	220	1	50	E4	60	WALL MOUNTED WITH BACKDRAFT DAMPER
EF-H-1	WELL HOUSE	600	10	WALL CENTRIFUGAL	1/4	220	1	50	E4	65	WALL MOUNTED WITH BACKDRAFT DAMPER
EF-I-1	PUMP ROOM	1,275	10	WALL CENTRIFUGAL	1/4	220	1	50	E4	60	WALL MOUNTED WITH BACKDRAFT DAMPER

ELECTRIC CABINET/UNIT HEATER SCHEDULE (EH X-X / UH X-X)

EQUIPT. NO.	LOCATION (1)	DISCHARGE	CAPACITY (KW)	AIR FLOW (CMH)	ELECTRICAL DATA HP	VOLTS	PH	HZ	TEMP. RISE DEG C	SOUND POWER dBA	REMARKS
EH-A-1	TOILETS	HORIZONTAL	0.75	68	1/70	220	1	50	30		WALL MOUNTED CABINET HEATER
EH-A-2	TOILET	VERTICAL	1.5	270	1/70	220	1	50	19		CEILING MOUNTED CABINET HEATER
UH-A-3	TOILETS/ SHOWERS	HORIZONTAL	3.0	510	1/20	220	1	50	17		WALL MOUNTED UNIT HEATER SEE DETAIL C ON SHT. SM3.
UH-D-1	GUARD HOUSE	HORIZONTAL	4	425	1/30	220	1	50	10		FLOOR MOUNTED CABINET HEATER
UH-E-1	GUARD TOWER	HORIZONTAL	4	425	1/20	220	1	50	10		FLOOR MOUNTED CABINET HEATER
UH-F-1	GUARD SHACK	HORIZONTAL	4	425	1/30	220	1	50	10		FLOOR MOUNTED CABINET HEATER
UH-H-1	WELL HOUSE	HORIZONTAL	3.0	510	1/20	220	1	50	17		WALL MOUNTED UNIT HEATER SEE DETAIL C ON SHT. SM3.
UH-I-1	PUMP ROOM	HORIZONTAL	4.0	600	1/20	220	1	50	20		WALL MOUNTED UNIT HEATER SEE DETAIL C ON SHT. SM3.

(1) SEE PLANS FOR LOCATION AND QUANTITY.

VENTED LIQUID PROPANE (LP) HEATER SCHEDULE (PH A-X)

EQUIPT. NO.	LOCATION (1)	EQPT. TYPE	CAPACITY (KW)	AIR FLOW (CMH)	ELECTRICAL DATA HP	VOLTS	PH	HZ	GAS INLET (MM)	SOUND POWER dBA	REMARKS
PH-A-1	MULTIPLE	VENTED	2.5	102	1/70	220	1	50	10		WALL/FLOOR MOUNTED CABINET HEATER W/BLOWER
PH-A-2	MULTIPLE	VENTED	4.1	102	1/70	220	1	50	10		WALL/FLOOR MOUNTED CABINET HEATER W/BLOWER
PH-A-3	MULTIPLE	VENTED	7.3	127	1/20	220	1	50	12.5		WALL/FLOOR MOUNTED CABINET HEATER W/BLOWER

(1) SEE PLANS FOR LOCATION AND QUANTITY.

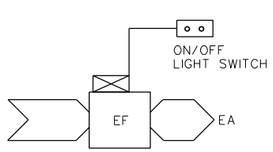

TEMPERATURE CONTROL DIAGRAM E1

E1 SEQUENCE OF CONTROL

START-UP

THE EXHAUST FAN SHALL BE STARTED MANUALLY FROM A LOCAL START/STOP LIGHT SWITCH.

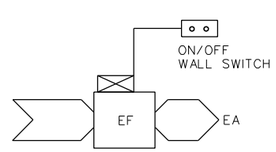

TEMPERATURE CONTROL DIAGRAM E2

E2 SEQUENCE OF CONTROL

START-UP

THE EXHAUST FAN SHALL BE STARTED MANUALLY FROM A LOCAL START/STOP LIGHT SWITCH.

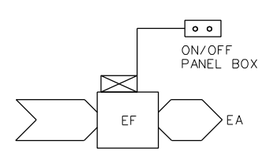

TEMPERATURE CONTROL DIAGRAM E3

E3 SEQUENCE OF CONTROL

START-UP

THE EXHAUST FAN SHALL BE STARTED MANUALLY FROM AN THE ON-OFF SWITCH IN THE PANEL BOX.

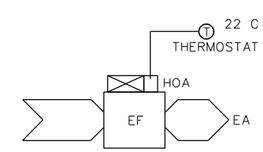

TEMPERATURE CONTROL DIAGRAM E4

E4 SEQUENCE OF CONTROL

START-UP

THE EXHAUST FAN SHALL BE STARTED MANUALLY BY PLACING THE HAND-OFF-AUTO (HOA) SWITCH IN THE HAND POSITION. IN THE AUTO POSITION, FAN OPERATION SHALL BE CONTROLLED OFF AN ADJUSTABLE THERMOSTAT.

SYMBOL	DESCRIPTION	DATE	APP

DESIGNED BY: RMS
DATE: 02-05-07
DWN BY: RMS
SUBMITTED BY: SYED EMAYATULLA CHIEF, PDT BLDG SYSTEMS
CHK BY: SE
FILE NO.: AF0701 $-MH02SC

US Army Corps of Engineers
Transatlantic Programs Center

AFGHAN NATIONAL POLICE HEADQUARTERS (2 STORY) COMPOUND
AFGHANISTAN
STANDARD DETAILS
MECHANICAL SCHEDULES

SHEET REFERENCE NUMBER:
SM-2

3/9/2007
h:\projects\afghanistan\af0701\general\mec\AF0701$-MH02SC.DWG

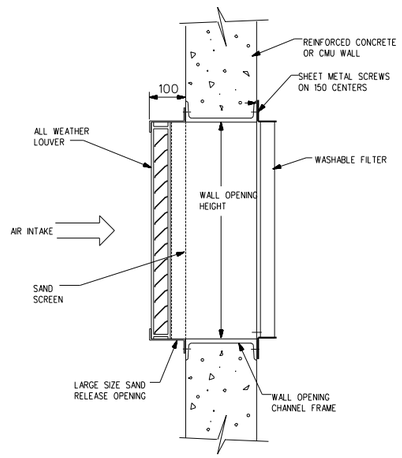

SAND TRAP TYPE LOUVER (A / SM3)
NOT TO SCALE

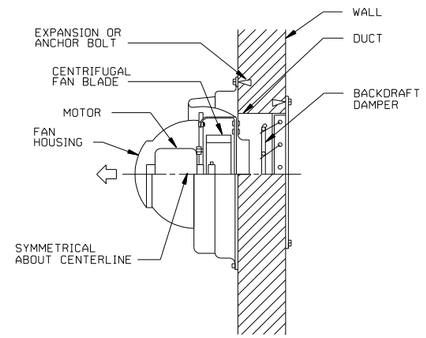

POWER WALL VENTILATOR DETAIL (B / SM3)
NOT TO SCALE

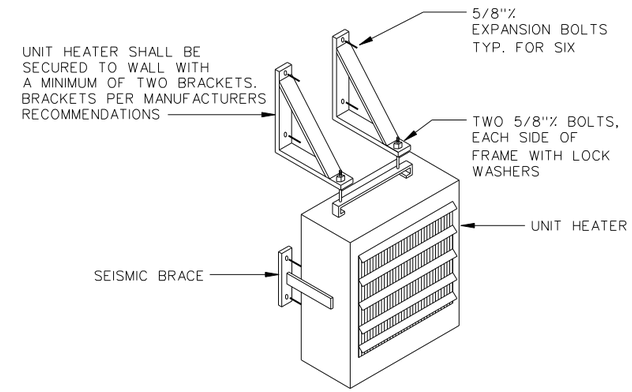

ELECTRIC UNIT HEATER DETAIL (C / SM3)
NOT TO SCALE

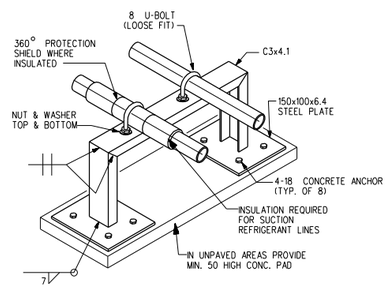

NOTES:
1. INSULATION AND METAL CLADDING REQUIRED AS PER SPECIFICATION SECTION 15250.

REFRIGERANT PIPING SUPPORT DETAIL (D / SM3)
NOT TO SCALE
(SIMILAR FOR CHILLED WATER AND OTHER PIPING SYSTEMS)

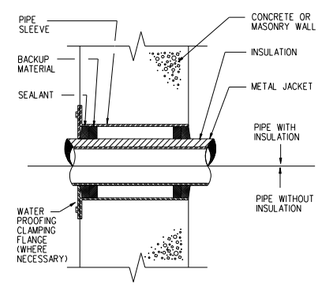

PIPE SLEEVE THRU WALL (E / SM3)
NOT TO SCALE

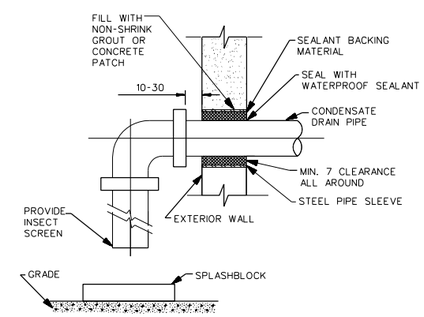

CONDENSATE DRAIN THRU EXTERIOR WALL (F / SM3)
NOT TO SCALE

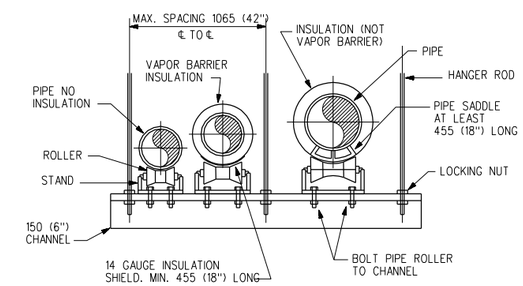

TRAPEZE HANGER DETAIL (G / SM3)
NOT TO SCALE

SYMBOL	DESCRIPTION	DATE	APP

DESIGNED BY: RMS | DATE: 02-05-07
DWN BY: RMS | SUBMITTED BY: SYED EMAYATULLA, CHIEF, PDT BLDG SYSTEMS
CHK BY: SE | FILE NO.: AF0701 S-MH03DT

US Army Corps of Engineers
Transatlantic Programs Center

AFGHAN NATIONAL POLICE HEADQUARTERS (2 STORY) COMPOUND
AFGHANISTAN
STANDARD DETAILS
MECHANICAL STANDARD DETAILS

SHEET REFERENCE NUMBER:
SM-3

3/9/2007
h:\projects\afghanistan\af0701\general\mec\AF0701S-MH03DT.DWG

LEGEND

- GATE VALVE
- GLOBE VALVE
- BUTTERFLY VALVE
- CHECK VALVE
- STOP CHECK VALVE
- PLUG VALVE
- 3-WAY VALVE
- RELIEF OR SAFETY VALVE
- ANGLE VALVE
- ANGLE GLOBE VALVE
- BALANCING COCK
- AIR VALVE
- HOSE GATE DRAIN VALVE
- EXPANSION VALVE
- AAV — AIR VENT, AUTOMATIC
- AIR VENT, MANUAL
- M — MOTORIZED VALVE (MODULATING OR TWO POSITION)
- S — SOLENOID VALVE
- M — 3-WAY MOTORIZED VALVE (MOD. OR 3-POSITION)
- S — 3-WAY SOLENOID VALVE
- TEMPERATURE REGULATING VALVE
- AIR ELIMINATOR
- BACK PRESSURE VALVE
- PRESSURE REDUCING VALVE
- D.V. — DRAIN VALVE
- SLEEVE COUPLING (SC)
- BP — BACKFLOW PREVENTER
- WHA 'A' — WATER HAMMER ARRESTOR

LEGEND

- P — PRESSURE GAUGE
- T — THERMOMETER, DIAL TYPE
- T — THERMOMETER, VERTICAL TYPE
- H.B. — HOSE BIBB, PLAN
- H.B. — HOSE BIBB, ELEV.
- W.H. — WALL HYDRANT
- CO — EXPOSED CLEANOUT
- FCO — FLOOR CLEANOUT
- WCO — WALL CLEANOUT
- BALL VALVE
- UNION
- FLANGE SET
- FLEXIBLE HOSE/CONNECTION
- Y-TYPE STRAINER
- SIGHT GLASS
- GAUGE GLASS W/COCKS
- FILTER / DRYER
- TANK AIR CONTROL FITTING
- CAPPED / PLUGGED CONNECTION
- REDUCER - INCREASER
- EXPANSION LOOP
- EXPANSION JOINT
- SUPPORT LOCATION
- PIPE TURNING DOWN
- PIPE TURNING UP
- FD — FLOOR DRAIN
- ROOF DRAIN
- POINT OF CONNECTION TO EXISTING SYSTEM

LEGEND

- A — COMPRESSED AIR DROP
- HU — HUMIDIFIER
- I.F. — INSULATING FLANGE
- THERMAL RELIEF VALVE W/ SIGHT FLOW INDICATOR
- S — BASKET STRAINER
- W — WATER METER
- TS — FLOW CONTROL VALVE
- SAMPLE CONNECTION
- FIRE SAFETY VALVE
- C — NON - SURGE CHECK VALVE
- FLOW CONTROL VALVE
- P — PRESSURE REGULATING VALVE
- W — WATER SLUG VALVE (WSV)

ABBREVIATIONS

A A	AMERICAN DISABILITIES ACT
CO	EXPOSED CLEAN OUT
CW	COLD WATER
EWH	ELECTRIC WATER HEATER
FCO	FLOOR CLEAN OUT
FD	FLOOR DRAIN
FFE	FINISHED FLOOR ELEVATION
FS	FLOOR SINK
GWH	GAS WATER HEATER
HB	HOSE BIBB
HW	HOT WATER
HWR	HOT WATER CIRCULATION
N.C.	NORMALLY CLOSED
P	PUMP
S.R.	SHORT RADIUS
S.S.	STAINLESS STEEL
V	VENT
VTR	VENT THROUGH ROOF
W	WASTE
WCO	WALL CLEAN OUT
WH	WALL HYDRANT

- SOIL OR WASTE PIPE ABOVE FLOOR
- SOIL OR WASTE PIPE BELOW FLOOR (MIN. 50 SIZE)
- COLD WATER, DOMESTIC (PLAN)
- HOT WATER, DOMESTIC (PLAN)
- HOT WATER, CIRCULATION, DOMESTIC (PLAN)
- VENT PIPE
- C — CONDENSATE DRAIN
- CA — COMPRESSED AIR
- HPIW — HIGH PRESSURE INDUSTRIAL WATER
- IW — INDUSTRIAL WATER

EQUIPMENT DESIGNATION

EF — EQUIPMENT TYPE
A-1 — EQUIPMENT NUMBER
BUILDING NUMBER

DETAIL REFERENCE

X — REFERENCE DESIGNATION LETTER
X — DETAIL SHEET LOCATION

PLUMBING FIXTURE SCHEDULE

FIX. NO.	SYMBOL	FIXTURE NAME	C.W.	H.W.	WASTE (W)	VENT (V)	REMARKS
P1		EASTERN WATER CLOSET (FLUSH TANK)	15	--	100	50	CW CONNECTION SHALL BE 25 UNLESS NOTED OTHERWISE. FLOOR OUTLET
P2		WESTERN WATER CLOSET (FLUSH TANK)	15	--	100	50	
P3		LAVATORY	15	15	32	32	
P3A		LAVATORY (2 STATION GANG)	15	15	32	32	
P4		MOP SINK (FLOOR MOUNT JANITOR TYPE)	15	15	50	40	DRAIN ON FLOOR OR AS INDICATED
P5		SHOWER	15	15	40	32	
P6		NOT USED					
P7		NOT USED					
P8		NOT USED					
P9		KITCHEN SINK	15	15	40	32	
P10		GREASE INTERCEPTOR			80	50	MANUAL CLEANING TYPE, WITH 135 LPM FLOW RATE
FD		FLOOR DRAIN			VARIES		SEE FLOOR PLAN FOR SIZE
FS		FLOOR SINK			80		SEE FLOOR PLAN FOR SIZE

FACILITY DESIGNATION

A	HEADQUARTERS
B	FUTURE BUILDING
C	FUTURE BUILDING
D	GUARD HOUSE *
E	GUARD TOWER *
F	GUARD SHACK *
H	WELL HOUSE BUILDING *
I	BOOSTER PUMP BUILDING

* NO PLUMBING WORK IN THESE FACILITIES

WATER HAMMER ARRESTOR SIZING CHART

P.D.I. SYMBOL	FIXTURE UNIT RATING	NIPPLE SIZE (MM)	CHAMBER HEIGHT (MM)
A	1-11	20	100
B	12-32	25	125
C	33-60	25	150
D	61-113	25	175
E	114-154	25	200
F	155-330	25	225

P. D. I. = PLUMBING AND DRAINAGE INSTITUTE.

GENERAL NOTES:

1. DRAINAGE PIPING LOCATED BELOW FLOORS SHALL BE ROUTED BELOW FOOTINGS UNLESS INDICATED OTHERWISE.
2. INTERIOR SOIL AND WASTE PIPING 80mm AND SMALLER SHALL BE ROUTED WITH A 2% SLOPE. INTERIOR SOIL AND WASTE PIPING 100mm AND LARGER SHALL BE ROUTED WITH A MINIMUM 1% SLOPE.
3. ALL DIMENSIONS SHOWN HERE AND ON PLANS ARE IN MM UNLESS INDICATED OTHERWISE.
4. MINIMUM BURIED PIPE SIZE SHALL BE 50 mm.
5. SEE STANDARD SHEET SM-1 FOR ADDITIONAL ABBREVIATIONS.
6. FOR FOOD SERVICE EQUIPMENT DESCRIPTION, SEE ARCHITECTURAL DRAWINGS.

SYMBOL	DESCRIPTION	DATE	APP.

DESIGNED BY: RMS
DATE: 02-05-07
DWN BY: RMS
SUBMITTED BY: SYED EMAYATULLA, CHIEF, PDT BLDG SYSTEMS
CHK BY: SE
FILE NO.: AF0701 S-MPOIGN

US Army Corps of Engineers
Transatlantic Programs Center

AFGHAN NATIONAL POLICE HEADQUARTERS (2 STORY) COMPOUND
AFGHANISTAN
STANDARD DETAILS
LEGEND AND ABBREVIATIONS

SHEET REFERENCE NUMBER:
SP-1

3/9/2007
h:\projects\afghanistan\af0701\general\mec\AF0701S-MPOIGN.DWG

NOTES:
1. PIPING SHALL BE PLASTIC PVC TO MATCH WATER DISTRIBUTION SYSTEM.
2. CONTRACTOR SHALL INSTALL DIELECTRIC UNION BETWEEN CONNECTIONS OF DISSIMILAR METALS.

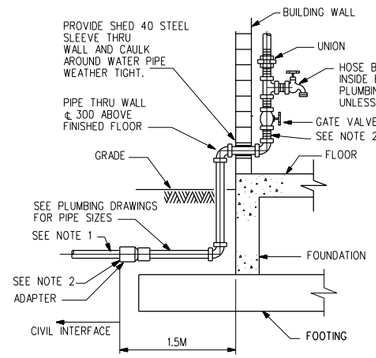

WATER SERVICE ENTRANCE SIDE VIEW

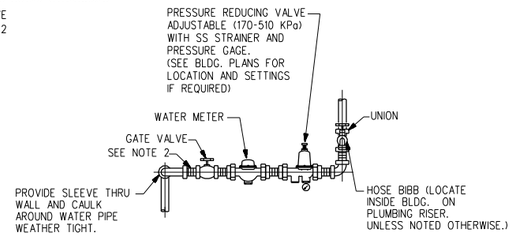

WATER SERVICE ENTRANCE FRONT VIEW

WATER SERVICE ENTRANCE DETAILS (A / SP2)
NOT TO SCALE

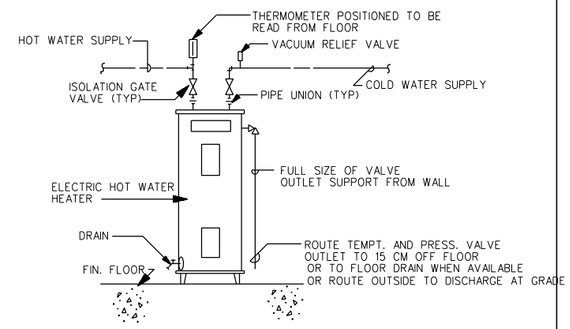

ELECTRIC WATER HEATER DETAIL (B / SP2)
NOT TO SCALE

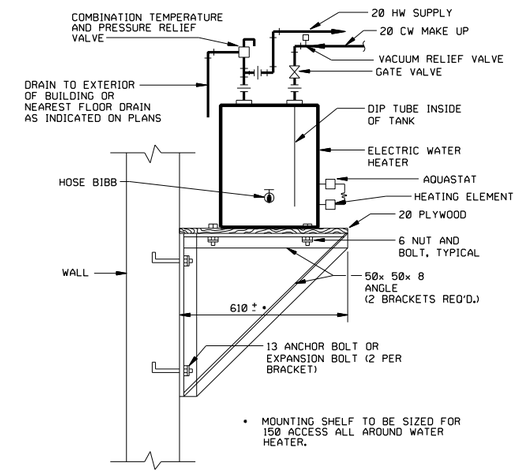

IF WATER HEATER COMES EQUIPPED WITH A MOUNTING BRACKET, CONTRACTOR WILL SUBMIT TO THE ENGINEER FOR APPROVAL, ALTERNATE INSTALLATION DETAIL AS RECOMMENDED BY HEATER MANUFACTURER FOR THE TYPE OF WALL (CMU,METAL STUD, ETC.) APPLICABLE

WALL MOUNTED ELECTRIC WATER HEATER DETAIL (C / SP2)
NOT TO SCALE

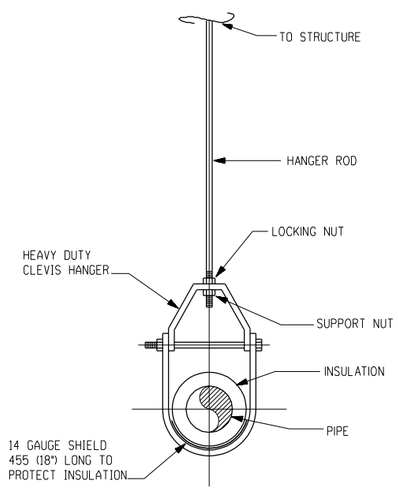

CLEVIS HANGER DETAIL (D / SP2)
NOT TO SCALE

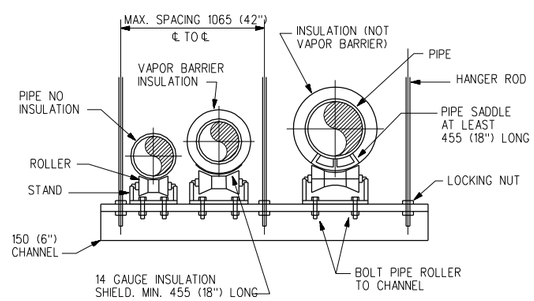

TRAPEZE HANGER DETAIL (E / SP2)
NOT TO SCALE

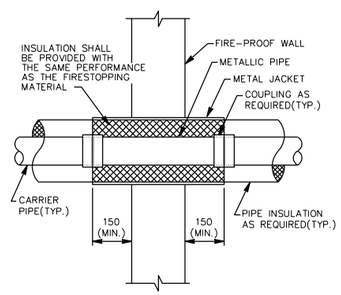

INSULATED OR NON-INSULATED, ABOVE GRADE

TYPICAL FIRE-PROOF, FRAMED WALL PENETRATION DETAIL (F / SP2)
NOT TO SCALE

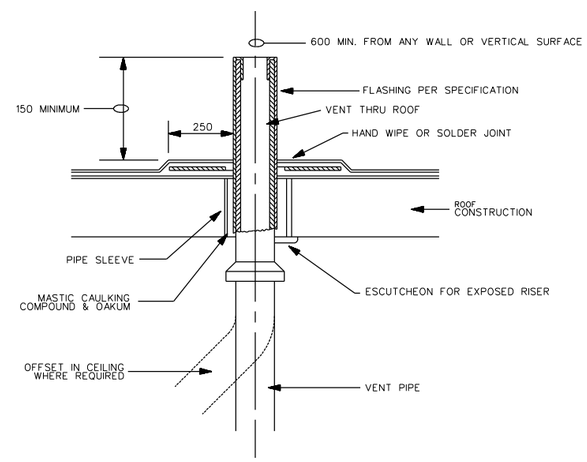

VENT THRU ROOF DETAIL (G / SP2)
NOT TO SCALE

SYMBOL	DESCRIPTION	DATE	APP

DESIGNED BY: RMS
DATE: 02-05-07
DWN BY: RMS
SUBMITTED BY: SYED ENAYATULLA, CHIEF, PDT BLDG SYSTEMS
CHK BY: SE
FILE NO.: AF0701 S-MP02DT

US Army Corps of Engineers
Transatlantic Programs Center

AFGHAN NATIONAL POLICE HEADQUARTERS (2 STORY) COMPOUND
AFGHANISTAN
STANDARD DETAILS
STANDARD PLUMBING DETAILS

SHEET REFERENCE NUMBER:
SP-2

3/9/2007
h:\projects\afghanistan\af0701\general\mec\AF0701S-MP02DT.DWG

LEGEND

- FLUORESCENT LIGHT FIXTURE.
- LIGHT FIXTURES, FIXTURE MARK AS INDICATED
- EXIT SIGN, TYPE F FIXTURE, MTD 2.2M AFF
- EMERGENCY LIGHT, TYPE C FIXTURE, MTD 2.4M AFF
- WP,S — DUPLEX SOCKET OUTLET (13A, 250V), BS 1363
  S - A/C OR WATER HEATER SWITCH-RECEPTACLE COMBINATION
  WP - WEATHERPROOF
- J — JUNCTION BOX
- S 3,WP — SWITCH, WP-WEATHERPROOF, 3-3 WAY, EP-EXPLOSION PROOF
- S — LIGHT SWITCH
- S F — EXHAUST FAN SWITCH
- S CF — CEILING FAN SWITCH
- J 20 — SAFETY DISCONNECT SWITCH, SWITCH SHALL BE IP56 ENCLOSURE, 20A UNO
- 1/3 — MOTOR (1/3 HP)
- S M — MANUAL MOTOR STARTER
- ELECTRIC UNIT HEATER
- EWH — ELECTRIC WATER HEATER
- LP-2 — HOMERUN, PNL LP, CIRCUIT 2
- LP-2 — HOMERUN, PNL LP, 3PH CKT, CIRCUIT 2
- COMBINATION LIGHTING AND POWER PANEL (LP), OR LOAD CENTER (LC)
- 400AT / 600AF — 3 POLE, 600A ADJUSTABLE TRIP CIRCUIT BREAKER
- 150AT / 3P — 3 POLE, 150A CIRCUIT BREAKER
- COMBINATION TELEPHONE/DATA OUTLET. SEE DETAIL SHEET SE-5 MOUNTED 0.5M AFF
- W — SINGLE TELEPHONE ONLY OUTLET, WALL MOUNTED 1.2m AFF
- TBB — TELEPHONE BACK BOARD (TVBB INDICATES TELEVISION BACKBOARD) (1200mmx600mmx12mm) UNLESS NOTED OTHERWISE
- WALL MOUNTED CLOSED CIRCUIT TELEVISION (CCTV) CAMERA, FIXED TYPE UNLESS PAN-TILT-ZOOM (PTZ) IS INDICATED, MH 2.4M AFF UNO
- EXOTHERMIC WELDED GROUND CONNECTION
- GROUND ROD (EARTH ELECTRODE) WITH EXOTHERMIC WELD CONNECTION, COPPER, 20mm DIA X 3.0m LENGTH
- EM 1 — ELECTRIC POWER MANHOLE, H INDICATES HANDHOLE.
- CM 1 — COMMUNICATIONS MANHOLE, H INDICATES HANDHOLE.
- SE — UNDERGROUND SECONDARY DISTRIBUTION POWER LINE, DIRECT BURIED IN SCHEDULE 40 PVC C, UNO
- UNDERGROUND DIRECT BURIED SCH 40 PVC C, AS INDICATED, 600 BFG, UNO

GENERAL NOTES:

1. REFER TO SECTION 01015 FOR ADDITIONAL / DETAIL REQUIREMENTS.
2. ALL WIRING INSTALLATION FOR LIGHTING, POWER, TELECOMMUNICATIONS, AND CCTV SHALL BE IN APPROVED METAL CONDUIT, EITHER CONCEALED OR SURFACE MTD.
3. EXIT AND EMERGENCY LIGHTING FIXTURES SHALL BE CONNECTED TO AN UN SWITCHED POWER CIRCUIT.
4. MOUNTING HEIGHT FOR ALL PENDANT MTD LIGHT FIXTURE IS 3M AFF UNO ON THE DRAWINGS OR IN THE LIGHT FIXTURE SCH.
5. MOUNT ALL LIGHT AND FAN SWITCHES 1.2M AFF UNO.
6. MOUNT ALL RECEPTACLES 500 AFF UNO. MOUNT ALL COUNTER TOP RECEPTACLES 100 ABOVE COUNTER TOP, AND PROVIDE GFI PROTECTION.
7. ALL SPARE OR EMPTY CONDUITS SHALL HAVE A PULL STRING SECURED AT BOTH ENDS OF CONDUIT.
8. ALL ELECTRICAL SYSTEMS SHALL BE INSTALLED IN ACCORDANCE WITH THE MANUFACTURERS RECOMMENDATIONS AND THE NEC.

LIGHTING FIXTURE SCHEDULE

* SEE LIGHTING FIXTURE DETAILS ON DRAWINGS SE-2 & SE-3

FIXTURE MARK	LINE VOLT.	TYPE	LAMPS NO.	LAMPS WATTAGE	MOUNTING	REMARKS
A	240	230B1	3	40	SURFACE/PENDANT	INDUSTRIAL FLUORESCENT, WITH ELECTRONIC BALLAST
A1	240	230A1	2	40	SURFACE/PENDANT	INDUSTRIAL FLUORESCENT, WITH ELECTRONIC BALLAST
B	240	232	2	40	SURFACE/PENDANT	VAPORTIGHT FLUORESCENT
C	240	603	-	-	SURFACE	EMERGENCY BATTERY PACK, MTD 2.4M AFF
D	240	PH8	1	250	PENDANT	METAL HALIDE LOW BAY INDUSTRIAL
E	240	-	1	1000	ROOF	SPOT LIGHT
F	240	XF2	1	8	SURFACE/PENDANT	EXIT LIGHT MTD 2.2M AFF
G	240	502B	1	70	SURFACE	HID EXTERIOR WALLL LIGHT
H	240	SF-11	1	100	SURFACE	VAPOR PROOF PROTECTED INCANDESCENT WITH CLEAR, RED, BLUE, OR BLACK GLOBE AS INDICATED ON THE DRAWINGS

ABBREVIATIONS

AFG	ABOVE FINISHED GRADE
AFF	ABOVE FINISHED FLOOR
AF	AMP FRAME
AT	AMP TRIP
ACCU	AIR COOLED CONDENSING UNIT
A	AMPERE
AHU	AIR HANDLING UNIT
AIC	AMPERE INTERRUPTING CAPACITY
BFG	BELOW FINISHED GRADE
CH	COMMUNICATIONS HANDHOLE
CKT	CIRCUIT
CM	COMMUNICATIONS MANHOLE
CND	CONDUCTOR(S)
C	CONDUIT
COR	CONTRACTING OFFICERS REPRESENTATIVE
EF	EXHAUST FAN
EH	ELECTRIC POWER HANDHOLE
EM	ELECTRIC POWER MANHOLE
EP	EXPLOSION PROOF
ELCB	EARTH LEAKAGE CIRCUIT BREAKER
FACP	FIRE ALARM CONTROL PANEL
GFI	GROUND FAULT INTERRUPTING
GFCI	GOVERNMENT FURNISHED CONTRACTOR INSTALLED
HP	HORSEPOWER
HPS	HIGH PRESSURE SODIUM
HZ	HERTZ
KV	KILOVOLT
KW	KILOWATT
KVA	KILOVOLT-AMPERE
M	METERS
MBB	METERING BACK BOARD
MDF	MAIN DISTRIBUTION FRAME
MEW	HOST NATION MINISTRY OF ELECTRICITY AND WATER
MTD	MOUNTED
NEC	NATIONAL ELECTRICAL CODE
NFPA	NATIONAL FIRE PROTECTION ASSOCIATION
NIC	NOT IN CONTRACT
PH, Ø	PHASE
P	POLE
XXX	HOST NATION ARMED FORCES
TEL	TEL CO.
RM	ROOM
SCH	SCHEDULE
SN	SOLID NEUTRAL
TBB	TELEPHONE TERMINAL BACKBOARD
TCB	TELEPHONE CONNECTION BOX (BY TEL CO)
TYP.	TYPICAL
UNO	UNLESS NOTED OTHERWISE
V	VOLT
W	WIRE
WP	WEATHERPROOF
XFMR,T	TRANSFORMER

EQUIVALENT CONDUIT SIZE	
mm	INCHES
20	3/4
25	1
32	1 1/4
38	1 1/2
50	2
60	2 1/2
80	3
90	3 1/2
100	4

METRIC COPPER CONDUCTOR CONVERSION CHART		
AWG KCMIL	COMPUTED CONVERSION mm 2	ADVISED CROSS SECTION mm 2
16	1.31	1.5
14	2.08	2.5
12	3.31	4
10	5.27	6
8	8.4	10
6	13.3	16
4	21.2	25
3	26.7	25
2	33.6	35
1	42.4	50
1/0	53.4	50
2/0	67.5	70
3/0	85.0	95
4/0	107.2	120
250	126.7	120
300	152.0	150
350	177.4	185
400	202.7	240
500	253.4	300

UNLESS OTHERWISE NOTED, LINEAR DIMENSIONS SHOWN ARE IN MILLIMETERS.

SYMBOL	DESCRIPTION	DATE	APP.

DESIGNED BY: MM
DWN BY: MM
CHK BY: SE
DATE: 02-05-07
SUBMITTED BY: SYED EMAYATULLA, CHIEF, PDT BLDG SYSTEMS
FILE NO.: AF0701 S-ELDIGN

US Army Corps of Engineers
Transatlantic Programs Center

AFGHAN NATIONAL POLICE HEADQUARTERS (2 STORY) COMPOUND
AFGHANISTAN
STANDARD DETAILS
LEGEND & ABBREVIATIONS

SHEET REFERENCE NUMBER:
SE-1

3/9/2007
h:\projects\afghanistan\af0701\general\ele\AF0701S-el010N2.DWG

FIXTURE MARK A

TYPE 230
SUSPENSION MOUNTED, INDUSTRIAL,
OPEN TYPE FLUORESCENT FIXTURE, 4-FOOT

FIRST SUFFIX	SECOND-SUFFIX	DESCRIPTION
A		TWO LAMPS
B		THREE LAMPS
C		FOUR LAMPS
	1	8 TO 15 PERCENT UPLIGHT
	2	18 TO 25 PERCENT UPLIGHT

FIXTURE SHALL CONFORM TO UL1570. STANDARD BALLAST(S) SHALL BE THE CLASS P, HIGH POWER FACTOR TYPE APPROVED FOR THE APPLICATION BY THE CERTIFIED BALLAST MANUFACTURERS. CHANNEL HOUSING, END FITTINGS, AND REFLECTOR SHALL BE CONSTRUCTED WITH DIE-FORMED, COLD-ROLLED STEEL. REFLECTOR FINISH SHALL BE PORCELIAN ENAMEL, BAKED WHITE ENAMEL OR ALUMINUM OXIDE. SOCKETS SHALL BE OF THE TYPE REQUIRING A FORCED MOVEMENT ALONG THE LONGITUDINAL AXIS OF THE LAMP FOR INSERTION AND REMOVAL OF THE LAMP. FIXTURE SHALL BE PREWIRED. FLUORESCENT TUBES SHALL BE PROTECTED BY A VIRGIN ACRYLIC PROTECTIVE SLEEVE AND CLEAR PLASTIC VENTED END CAPS.

FIXTURE MARK B

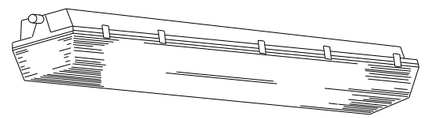

TYPE 232
4-FOOT FIXTURE LENGTH

ENCLOSED AND GASKETED, VAPOR-TIGHT FLUORESCENT FIXTURE
FOR SURFACE OR PENDANT MOUNTING

FIXTURE SHALL CONFORM TO UL1570 AND SHALL BE VAPOR-TIGHT AND SUITABLE FOR USE IN WET LOCATIONS. FIXTURE SHALL HAVE ONE-PIECE HOUSINGOF MOLDED HIGH-IMPACT PLASTIC OR REINFORCED FIBERGLASS. HOUSING BODY SHALL HAVE AN INTERNAL, DIE-FORMED, COLD-ROLLED STEEL CHANNEL WITH COVER TO PROVIDE FIXTURE RIGIDITY AND TO CONTAIN ELECTRIC COMPONENTS. THE METAL CHANNEL AND COVER SHALL RECEIVE A RUST INHIBITIVE COATING BEFORE APPLICATION OF THE FINISH COAT, WHICH SHALL CONSIST OF BAKED WHITE ENAMEL OR PORCELAIN ENAMEL. THE LENS SHALL BE ONE PIECE, OF HIGH-IMPACT-RESISTANT ACRYLIC, AND SHALL HAVE SMOOTH EXTERIOR SURFACE AND STIPPLED OR PEBBLED INTERIOR SURFACE. THE LENS SHALL BE SECURED TO THE HOUSING WITH CAPTIVE MOLDED PLASTIC OR STAINLESS STEEL SPRING LATCHES. A CONTINUOUS GASKET SHALL BE PROVIDED TO FORM A VAPOR SEAL BETWEEN THE LENS AND THE FIXTURE BODY. ALL OPENINGS IN THE HOUSING FOR MOUNTING, CONDUIT, ETC., SHALL BE CAPABLE OF FORMING A VAPOR-TIGHT SEAL. BALLAST(S) SHALL BE COLD WEATHER TYPE FOR STARTING TEMPERATURES DOWN TO MINUS 20 DEGREES F. STANDARD BALLAST(S) SHALL BE THE CLASS P, HIGH POWER FACTOR TYPE APPROVED FOR THE APPLICATION BY THE CERTIFIED BALLAST MANUFACTURERS. FIXTURE SHALL BE PREWIRED, AND PROVIDED WITH LAMPS THAT ARE PROPERLY MATED TO THE BALLAST OPERATING CHARACTERISTICS.

FIXTURE MARK C

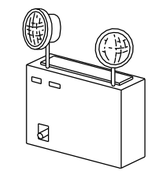

TYPE 603

UNIT SHALL CONFORM TO IEC 60598-2-22 AND SHALL HAVE AN IP20 RATED ENCLOSURE. THE UNIT SHALL BE RATED FOR USE AT VOLTAGE OF LIGHTING CIRCUIT. FIXTURE SHALL HAVE 2 x 20W TUNGSTEN HALOGEN SPOT LIGHTS. FOLLOWING SUSTAINED LOSS OF THE NORMAL POWER SUPPLY, THE UNIT SHALL BE CAPABLE OF AUTOMATICALLY AND INSTANTANEOUSLY ILLUMINATING THE TWO 12-VOLT LIGHTING FIXTURES FOR A PERIOD OF NOT LESS THAN 3 HOURS AT A BATTERY VOLTAGE IN EXCESS OF 87.5 PERCENT OF THE NOMINAL VOLTAGE RATING.THE BATTERY SHALL BE DESIGNED TO BE MAINTENANCE FREE DURING THE EXPECTED BATTERY LIFE, AND SHALL BE WARRANTED FOR NOT LESS THAN 3 YEARS FROM THE DATE OF PURCHASE OF THE UNIT, AND SHALL BE FIELD REPLACEABLE WITHOUT REQUIRING REMOVAL OF OTHER COMPONENTS. THE BATTERY CHARGER SHALL BE THE SOLID-STATE TYPE AND SHALL PROVIDE A CONTINUOUS, VARIABLE, CURRENT LIMITED, FILTERED, AND REGULATED CHARGE RATE. THE BATTERY AND CHARGER SHALL BE CONTAINED IN A STEEL CABINET NOT LESS THAN 18 GAUGE THICKNESS WITH AN ENAMEL FINISH, UNLESS OTHERWISE APPROVED, WHICH SHALL BE EQUIPPED WITH A PUSH-TO-TEST SWITCH. MOUNTING BRACKETS OR SHELF SHALL BE PROVIDED. COMPLETE WITH ALL MOUNTING HARDWARE. ALL WITH A FINISH TO MATCH THE FINISH OR COLOR OF THE CABINET. THE UNIT SHALL BE PREWIRED AND EQUIPPED WITH TWO 12-VOLT, 20 WATT FLOODLIGHTS AS INDICATED.

FIXTURE MARK D

TYPE: PH8

FEATURES
LAMP TYPE: 250W METAL HALIDE
PROFILE: 1 LAMP
SHIELDING: DROP-DISH PRISMATIC REFRACTOR
MOUNTING: RIGID STEM WITH SWIVEL BALL ALIGNER
BALLAST: HIGH POWER FACTOR, CORE & COIL, CWA

OPTIONS
LAMP TYPE: MH: 175W
MOUNTING: SURFACE
BALLAST: HI-LOW, REMOTE

NOM. DIMENSIONS 635 mm X 711 mm (25" H X 28" DIA)

GENERAL DESCRIPTION
HOUSING: DIE-CAST ALUMINUM BALLAST HOUSING WITH HEAT SINK

REFLECTORS: SPUN OR HYDRO-FORMED ALUMINUM FOR LOW GLARE SHIELDING: ANODIZED FINISH

FINISH: NATURAL ALUMINUM, ANODIZED OR CLEAR LACQUERED

PENDANT MOUNTED METAL HALIDE LOW BAY INDUSTRIAL

FIXTURE MARK E

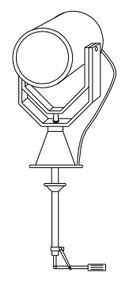

SEALED BEAM SPOTLIGHT, MOUNTED TO GUARD TOWER ROOF, WITH 1000 WATT HALOGEN NARROW SPOT PAR 56 LAMP. SPOTLIGHT SHALL BE PROVIDED WITH TWIST LEVER CONTROL. MINIMUM 10" DIAMETER LIGHT HEAD. WORKING RANGE OF 1/2 MILE. COUPLING FOR OPERATION FROM GUARD TOWER PLATFORM AND RATED FOR OUTDOOR ROUGH SERVICE.

FIXTURE MARK F

TYPE: XF2

FEATURES
LAMP TYPE: T5.8W
PROFILE: 1 LAMP
MOUNTING: UNIVERSAL
SHIELDING: FLAT SHEET ACRYLIC
LETTERS: GREEN
NOM. DIMENSIONS: 400mm W x 185mm H x 85mm D

GENERAL DESCRIPTION
HOUSING: DIE-CAST ALUMINUM OR 20 GA. CRS. HARDWARE FINISH TO MATCH HOUSING FINISH. SIGN TO COMPLY WITH EN 60598-2.22

ELECTRICAL: 230/240 VOLT AC, 50/60 HZ

OTHER: BATTERY BACKUP TO MAINTAIN OPERATION FOR MINIMUM 3 HOUR DURATION

FLOURESCENT STENCIL FACE EXIT SIGN

UNLESS OTHERWISE NOTED, LINEAR DIMENSIONS SHOWN ARE IN MILLIMETERS.

SYMBOL	DESCRIPTION	DATE	APP

DESIGNED BY: MM
DATE: 02-05-07
DWN BY: MM
SUBMITTED BY: SYED ENAYATULLA, CHIEF, PDT BLDG SYSTEMS
CHK BY: SE
FILE NO.: AF0701 $-EL02DT

US Army Corps of Engineers
Transatlantic Programs Center

AFGHAN NATIONAL POLICE HEADQUARTERS (2 STORY) COMPOUND
AFGHANISTAN
STANDARD DETAILS
STANDARD LIGHTING DETAILS

SHEET REFERENCE NUMBER:
SE-2

3/9/2007
h:\projects\afghanistan\af0701\general\ele\AF0609$-el02DT.DWG

FIXTURE MARK G

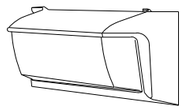

TYPE 502
HIGH INTENSITY DISCHARGE FIXTURE FOR EXTERIOR WALL MOUNTING, MEDIUM OUTPUT

FIRST-SUFFIX	DESCRIPTION RATED FOR:
A	50 WATT HIGH PRESSURE SODIUM LAMP
B	70 WATT HIGH PRESSURE SODIUM LAMP
C	100 WATT HIGH PRESSURE SODIUM LAMP
D	150 WATT HIGH PRESSURE SODIUM LAMP
E	250 WATT METAL HALIDE LAMP

FIXTURE SHALL CONFORM TO UL 1572 AND SHALL BE RATED FOR USE IN WET LOCATIONS. THE FIXTURE HOUSING, DOOR ASSEMBLY, AND BACKPLATE SHALL BE DIE-CAST ALUMINUM. THE DOOR ASSEMBLY SHALL HAVE INTEGRAL CAST ALUMINUM HINGES. THE DOOR ASSEMBLY SHALL BE HELD SECURLY TO THE FIXTURE HOUSING WITH A STAINLESS STEEL SAFETY STRAP WHEN THE DOOR IS IN THE OPEN POSITION. THE ASSEMBLY SHALL BE HELD FIRMLY AGAINST A SEALING GASKET BETWEEN THE FIXTURE DOOR AND HOUSING BY STAINLESS STEEL LATCHES OR WITH STAINLESS STEEL OR BRASS CAPTIVE SCREWS WHEN THE FIXTURE DOOR IS CLOSED. THE REFACTOR SHALL BE PRISMATIC BOROSILICATE GLASS OR POLYCARBONATE RESIN. THE REFACTOR SHALL BE GASKETED AND SECURLY HELD IN THE DOOR FRAME, BUT SHALL BE EASILY REMOVED FOR REPLACEMENT WITH A COMMON TOOL. THE REFLECTOR SHALL BE ALUMINUM WITH THE MANUFACTURER'S STANDARD COMMERCIAL PRODUCT FINISH SUITABLE FOR THE TYPE AND RATING OF THE LAMP. THE FIXTURE SHALL HAVE MANUFACTURERS STANDARD PROTECTIVE COATING. CAST KNOCKOUTS SHALL BE PROVIDED IN THE BACKPLATE FOR RECESSED OUTLET BOX MOUNTING. BALLAST SHALL BE OF THE HIGH POWER FACTOR TYPE. BALLAST SHALL BE OF THE LEAD-PEAK AUTOTRANSFORMER TYPE FOR METAL HALIDE LAMPS AND THE REGULATING TYPE FOR HIGH PRESSURE SODIUM LAMPS. BALLAST SHALL BE CAPABLE OF STARTING AND OPERATING THE LAMP AT AMBIENT TEMPRATURES FROM MINUS 20 DEGREES F TO 105 DEGREES F. THE FIXTURE SHALL BE PREWIRED, AND SHALL HAVE A FIELD ADJUSTABLE, MOGUL BASE GLAZED PORCELAIN LAMPHOLDER. FIXTURE SHALL HAVE FACTORY FITTED INTEGRAL PHOTOCELL.

ABOVE DESCRIPTION IS PROVIDED TO ESTABLISH ACCEPTABLE QUALITY OF FIXTURE. CONTRACTOR SHALL PROVIDE ALOCALLY AVAILABLE SIMILAR QUALITY FIXTURE COMPLYING WITH IEC (EUROPEAN),BS (BRITISH STANDARD), VDE/DIN (GERMAN STANDARD) AND IN COMPLIANCE WITH THE REQUIREMENTS OF STATE OF QATAR MINISTRY OF ELECTRICITY AND WATER.

FIXTURE MARK I

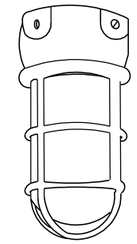

TYPE SF11

FEATURES

LAMP TYPE: INCCANDESCENT BULB: 100W
GLASS GLOBE CLEAR, BLUE, RED, OR BLACK AS INDICATED ON THE DRAWINGS
PROFILE: 1 LAMP
SHIELDING: CLEAR GLASS GLOBE

OPTIONS

GLASS GLOBE: CLEAR, RED, BLUE, OR BLACK
LAMP TYPE: 75W, 100W, 150W
MOUNTING: PENDANT OR SURFACE
SHIELDING: HEAT RESISTANT

NOM. DIMENSIONS: 111mm X 251mm

GENERAL DESCRIPTION

HOUSING: 30 PERCENT GLASS FILLED THERMOPLASTIC POLYSTER
ELECTRICAL: 220 - 240 VOLT
FINISH: MOLDED IN NON-GRAYING FINISH

SURFACE MOUNTED INCANDESCENT VAPOR TIGHT JELLY JAR WITH WIRE GUARD

NOT TO SCALE

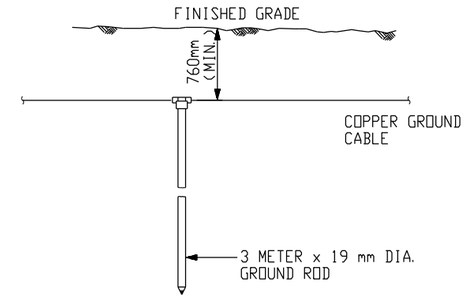

NOTES:

1. CONDUCTOR SIZE SHALL BE AS INDICATED ON PLANS.
2. EXOTHERMIC WELDS SHALL BE AS RECOMMENDED BY MANUFACTURER FOR THE SIZE OF CONNECTION AND MATERIAL INVOLVED. SEE DETAIL 5 ON SHEET SE-7.

BELOW GRADE GROUNDING ROD DETAIL

NOT TO SCALE

DETAIL 1
NOT TO SCALE

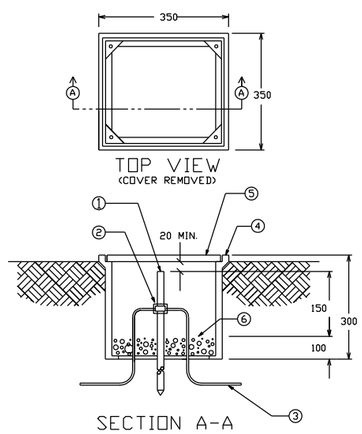

MATERIAL LIST

1. GROUND ROD
2. EXOTHERMIC WELD
3. GROUNDING CONDUCTOR 70mm² COPPER
4. POLYMER CONCRETE FIBERGLASS REINFORCED BOX
5. COVER FOR ABOVE BOX
6. GRAVEL OR CRUSHED STONE

GROUND ROD ACCESS BOX INSTALLATION DETAIL

NOT TO SCALE

DETAIL 2
NOT TO SCALE

UNLESS OTHERWISE NOTED, LINEAR DIMENSIONS SHOWN ARE IN MILLIMETERS.

SYMBOL	DESCRIPTION	DATE	APP.

DESIGNED BY: MM
DATE: 02-05-07
DWN BY: MM
SUBMITTED BY: SYED EMAYATULLA CHIEF, PDT BLDG SYSTEMS
CHK BY: SE
FILE NO.: AF0701 $-EL03DT

US Army Corps of Engineers
Transatlantic Programs Center

AFGHAN NATIONAL POLICE HEADQUARTERS (2 STORY) COMPOUND
AFGHANISTAN
STANDARD DETAILS
STANDARD LIGHTING DETAILS

SHEET REFERENCE NUMBER:
SE-3

3/9/2007
h:\projects\afghanistan\af0701\general\ele\AF0609$-el03DT.DWG

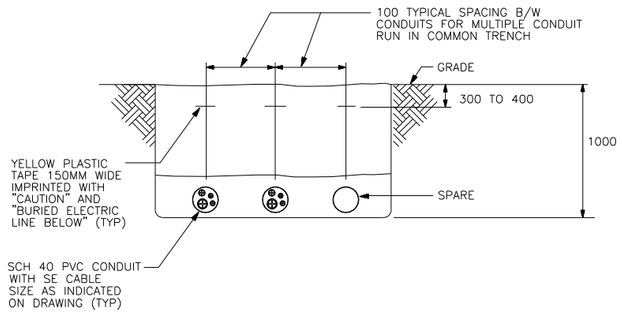

SECONDARY DISTRIBUTION CONDUIT TRENCH DETAIL

NOT TO SCALE

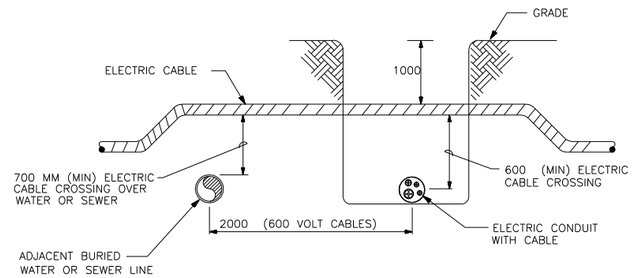

UNDERGROUND UTILITIES CROSSING DETAIL

NOT TO SCALE

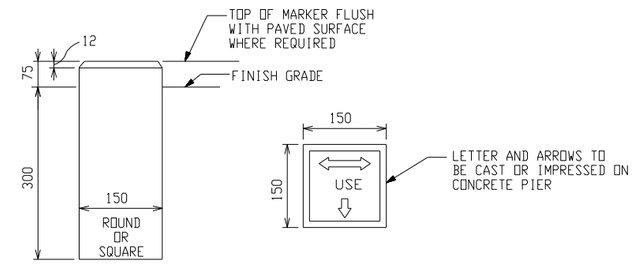

DIRECT BURIED CABLE MARKER DETAIL

NOT TO SCALE

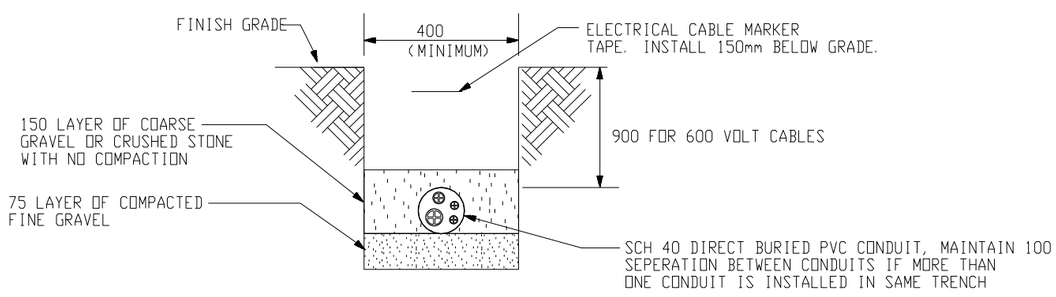

DIRECT BURIED DUCT DETAIL

NOT TO SCALE

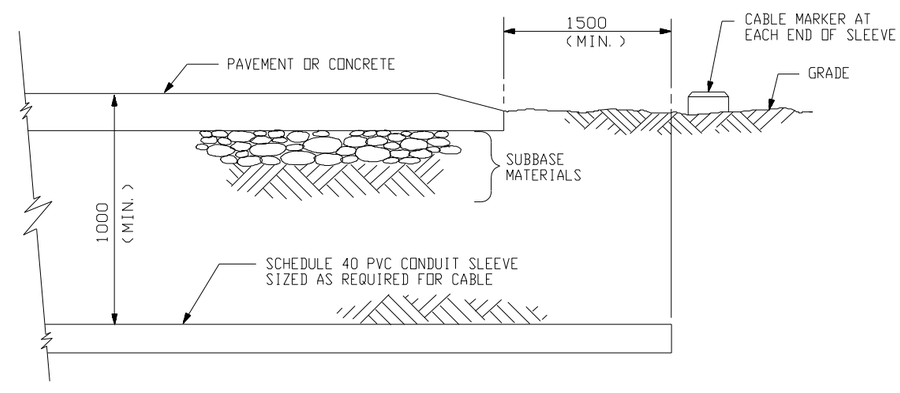

UNDER ROADWAY DUCT CROSSING SLEEVE DETAIL

NOT TO SCALE

UNLESS OTHERWISE NOTED, LINEAR DIMENSIONS SHOWN ARE IN MILLIMETERS.

SYMBOL	DESCRIPTION	DATE	APP

DESIGNED BY: MM
DATE: 02-05-07
DWN BY: MM
SUBMITTED BY: SYED EMAYATULLA, CHIEF, PDU BLDG SYSTEMS
CHK BY: SE
FILE NO.: AF0701 S-EL04DT

US Army Corps of Engineers
Transatlantic Programs Center

AFGHAN NATIONAL POLICE HEADQUARTERS (2 STORY) COMPOUND
AFGHANISTAN
STANDARD DETAILS
DUCTBANK DETAILS

SHEET REFERENCE NUMBER:
SE-4

3/9/2007
h:\projects\afghanistan\af0701\general\ele\AF0609S-el04DT.DWG

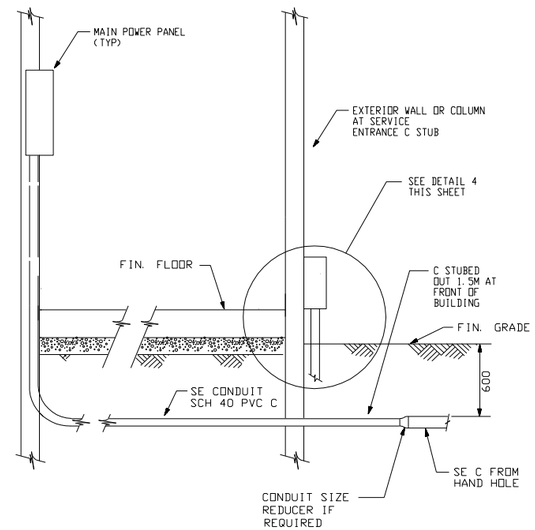

SERVICE PANEL CABLE ENTRANCE DIAGRAM
NOT TO SCALE

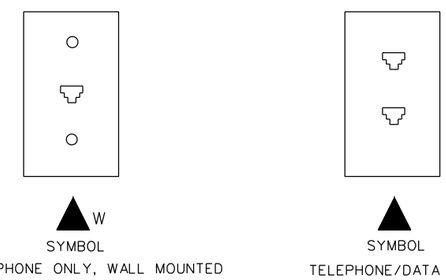

TELEPHONE AND DATA OUTLET DETAILS
NOT TO SCALE

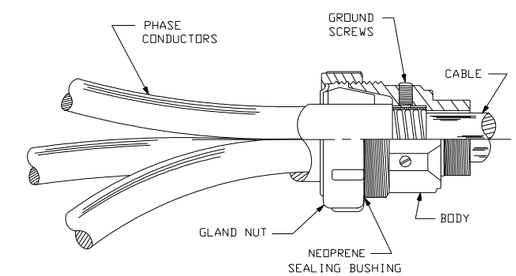

TYPICAL 600V CABLE TERMINATOR DETAIL
NOT TO SCALE

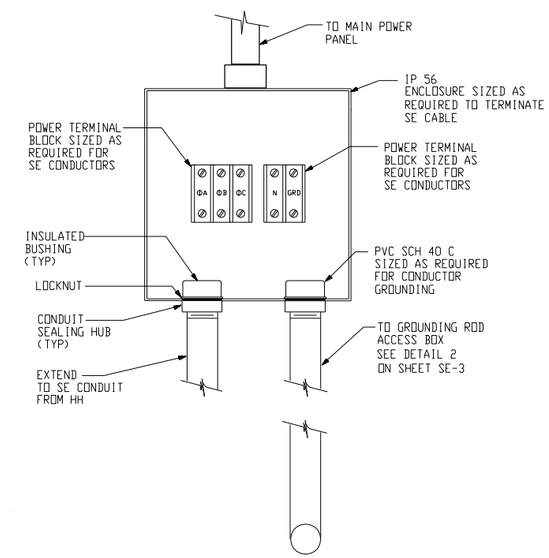

SE JUNCTION BOX
NOT TO SCALE

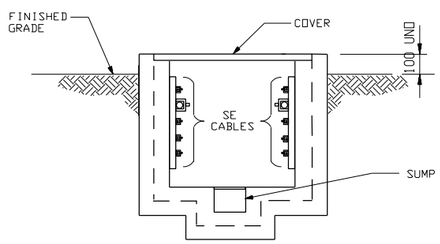

HANDHOLE CABLE INSTALLATION
NOT TO SCALE

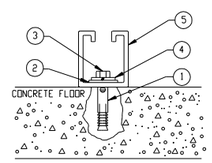

CHANNEL STRUT INSTALATION

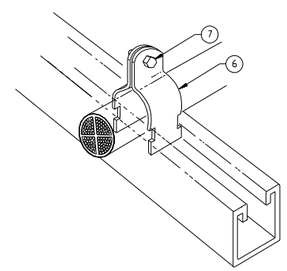

CABLE CLAMP INSTALLATION
NOT TO SCALE

CHANNEL SYSTEM LIST OF MATERIALS

ITEM	SML	DESCRIPTION	PART NO/NSN	UI	QTY
1		SHIELD, EXPANSION			
2		WASHER, FLAT 3/8 " ID			
3		BOLT,LAG,HEX HEAD, 3/8 "-16 X 1 1/4 "			
4		WASHER, LOCK 3/8 " ID			
5		CHANNEL, CONT. SLOTTED 1-5/8"			
6		CONDUIT / CONDUCTOR CLAMP			
7		SLOTTED HEX MACHINE SCREW & SQUARE NUT			

CONDUIT / CONDUCTOR CHANNEL SYSTEM INSTALLATION DETAIL
NOT TO SCALE

DETAIL 4
NOT TO SCALE

UNLESS OTHERWISE NOTED, LINEAR DIMENSIONS SHOWN ARE IN MILLIMETERS.

SYMBOL	DESCRIPTION	DATE	APP

DESIGNED BY: MM
DWN BY: MM
CHK BY: SE
DATE: 02-05-07
SUBMITTED BY: SYED ENAYATULLA CHIEF, POLY BLDG SYSTEMS
FILE NO.: AF0701 $-EL05DT

US Army Corps of Engineers
Transatlantic Programs Center

AFGHAN NATIONAL POLICE HEADQUARTERS (2 STORY) COMPOUND
AFGHANISTAN
STANDARD DETAILS
STANDARD ELECTRICAL DETAILS

SHEET REFERENCE NUMBER:
SE-5

3/9/2007
h:\projects\afghanistan\af0701\general\ele\AF0609$-el05DT.DWG

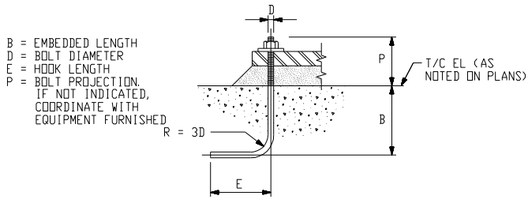

NOTE:
UNLESS OTHERWISE INDICATED, TYPE V OR VI ANCHOR RODS MAY BE USED AT THE CONTRACTOR'S OPTION

SCHEDULE			
D (IN)	B (mm)	E (mm)	REMARKS
3/8"	125	125	
1/2"	150	150	
5/8"	200	180	
3/4"	255	220	
7/8"	305	280	
1"	355	330	

TYPE V ANCHOR RODS
HOOKED BOLT

SCHEDULE			
D (IN)	B (mm)	E (mm)	REMARKS
3/8"	180	75	
1/2"	230	75	
5/8"	280	100	
3/4"	355	125	
7/8"	405	180	
1"	485	200	

TYPE VI ANCHOR RODS
HOOKED BOLT

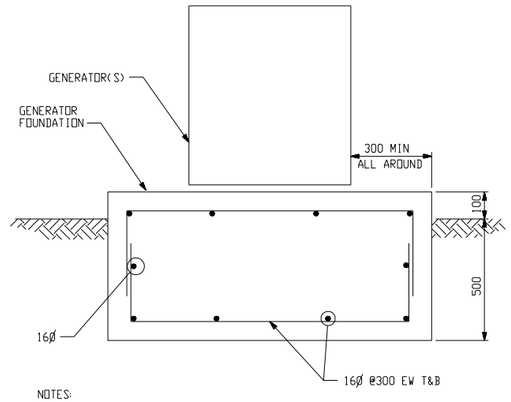

NOTES:
1. SEE DRAWING XE-1 FOR GENERATOR LOCATIONS.
2. COORDINATE PAD SIZE AND ANCHOR BOLT REQUIREMENTS WITH THE EQUIPMENT SUPPLIED.

TYPICAL EXTERIOR GENERATOR FOUNDATION
NOT TO SCALE

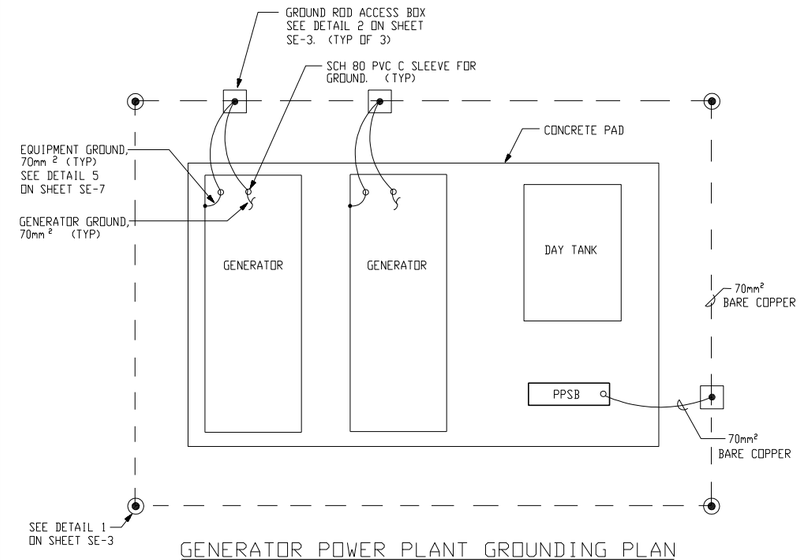

GENERATOR POWER PLANT GROUNDING PLAN
NOT TO SCALE

NOTES:
1. GROUNDING COUNTERPOISE SHALL BE 1.5M AWAY FROM GENERATOR PAD FOUNDATION AND 0.760M BELOW FINISHED GRADE.
2. ALL GROUNDING CONNECTIONS SHALL BE EXOTHERMIC WELD CONNECTIONS, SEE DETAIL 5 ON SHEET SE-7.
3. THE DAY TANK MAY BE AN INTEGRAL PART OF EACH GENERATOR SET.

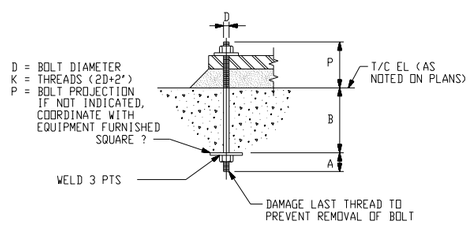

SCHEDULE				
D	A	B	SQUARE ?	REMARKS
3/4	50mm	250mm	?13x75x75	
7/8	75mm	300mm	?16x90x90	
1 1/8	75mm	400mm	?20x100x100	
1 1/4	75mm	460mm	?20x110x110	

TYPE II ANCHOR RODS
UNSLEEVED BOLT

TYPICAL ANCHOR ROD DETAILS
NOT TO SCALE

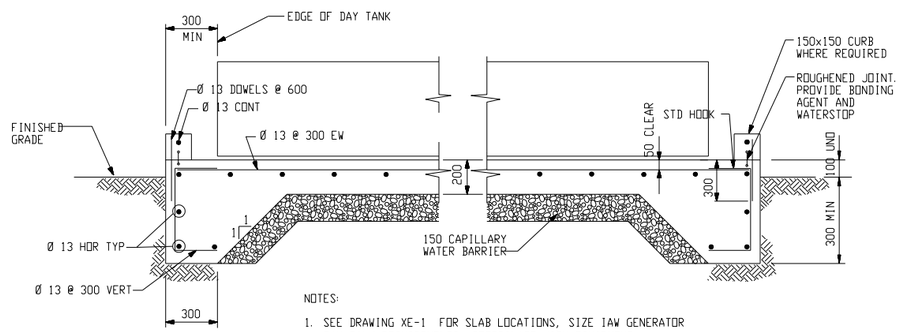

NOTES:
1. SEE DRAWING XE-1 FOR SLAB LOCATIONS, SIZE IAW GENERATOR DAY TANK REQUIREMENTS, COORDINATE WITH EQUIPMENT FURNISHED. PROVIDE MINIMUM EDGE CLEARANCE AS INDICATED.

TYPICAL DAY TANK SLAB
NOT TO SCALE

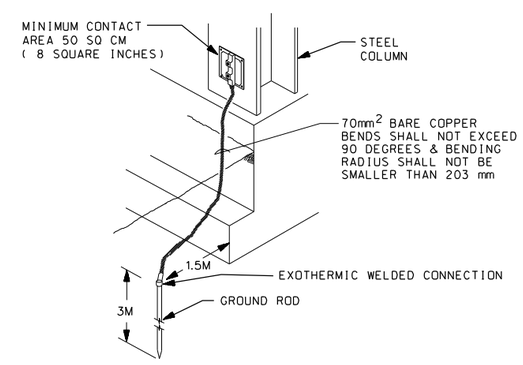

COLUMN GROUNDING DETAIL
NOT TO SCALE

DETAIL 6/1
NOT TO SCALE

UNLESS OTHERWISE NOTED, LINEAR DIMENSIONS SHOWN ARE IN MILLIMETERS.

SYMBOL	DESCRIPTION	DATE	APP

DESIGNED BY: MM
DATE: 02-05-07
DWN BY: MM
SUBMITTED BY: SYED EMAYATULLA, CHIEF, POLY BLDG SYSTEMS
CHK BY: SE
FILE NO.: AF0701 $-EL06DT

US Army Corps of Engineers
Transatlantic Programs Center

AFGHAN NATIONAL POLICE HEADQUARTERS (2 STORY) COMPOUND
AFGHANISTAN
STANDARD DETAILS
POWER PLANT DETAILS

SHEET REFERENCE NUMBER:
SE-6

3/9/2007
h:\projects\afghanistan\af0701\general\ele\AF0609$-el06DT.DWG

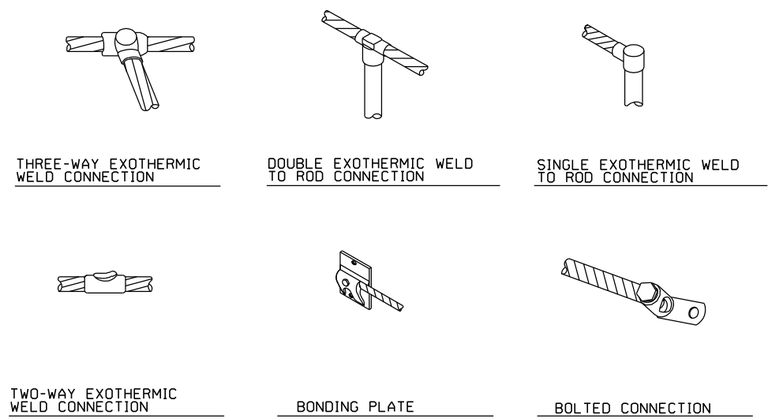

GROUNDING CONDUCTOR CONNECTION DETAILS

NOT TO SCALE

DETAIL 5
NOT TO SCALE

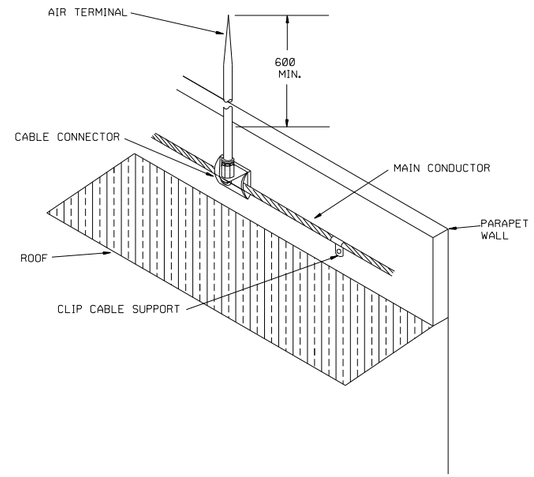

AIR TERMINAL DETAIL

NOT TO SCALE

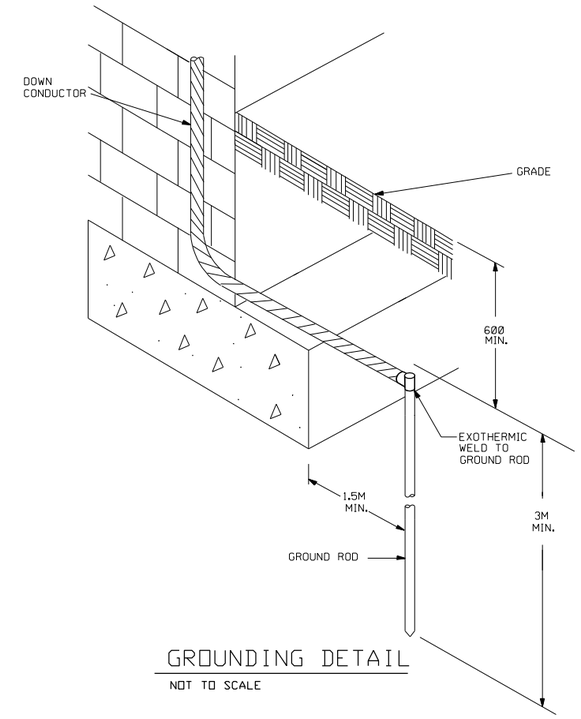

GROUNDING DETAIL

NOT TO SCALE

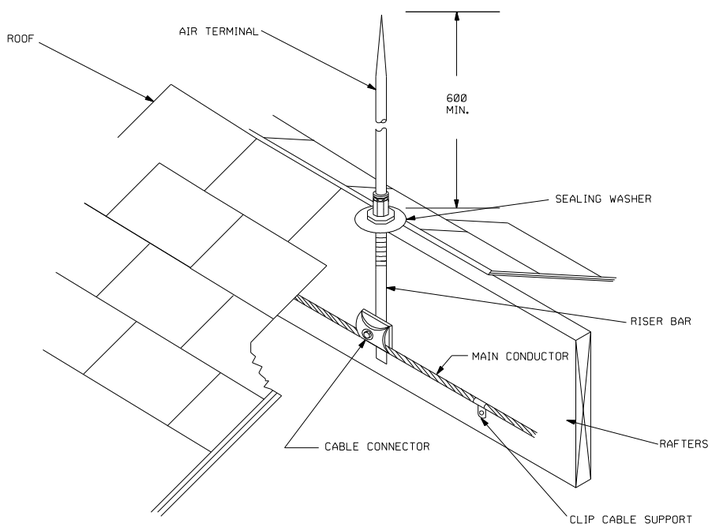

AIR TERMINAL DETAIL

NOT TO SCALE

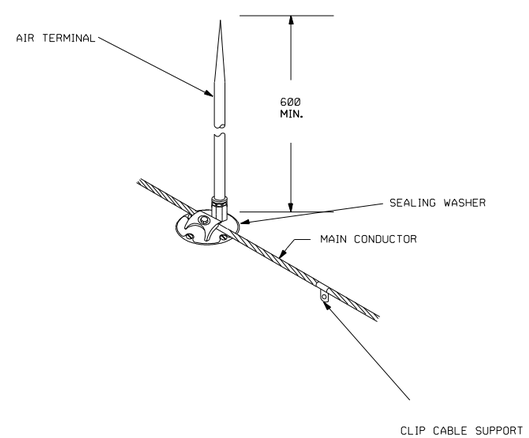

AIR TERMINAL DETAIL

NOT TO SCALE

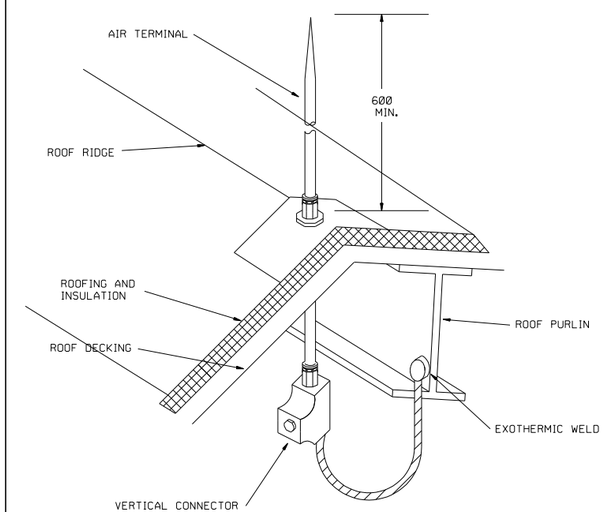

AIR TERMINAL DETAIL

NOT TO SCALE

UNLESS OTHERWISE NOTED, LINEAR DIMENSIONS SHOWN ARE IN MILLIMETERS.

SYMBOL	DESCRIPTION	DATE	APP

DESIGNED BY: MM
DATE: 02-05-07
DWN BY: MM
SUBMITTED BY: SYED ENAYATULLA, CHIEF, PDT BLDG SYSTEMS
CHK BY: SE
FILE NO.: AF0701 $-EL07DT

US Army Corps of Engineers
Transatlantic Programs Center

AFGHAN NATIONAL POLICE HEADQUARTERS (2 STORY) COMPOUND
AFGHANISTAN
STANDARD DETAILS
LIGHTNING PROTECTION DETAILS

SHEET REFERENCE NUMBER:
SE-7

3/9/2007
h:\projects\afghanistan\af0701\general\ele\AF0609$-el07S7.DWG

CONSTRUCTION REQUIREMENTS				
CLEAR MINIMUM INSIDE REQUIREMENTS FOR INSTALLATION AND MAINTENANCE PURPOSES				
TYPE	HEIGHT	LENGTH	WIDTH	SUMP DEPTH
HH	1. 2M	1. 2M	1. 2M	0. 3M

MINIMUM CONCRETE THICKNESS	
HANDHOLE WALLS TOP, AND FLOORS	SUMP WALLS AND FLOOR
150mm	100mm

MINIMUM REINFORCING

1. BARS WILL BE A MINIMUM OF 13ϕ ROUND DEFORMED.
2. WALLS AND FLOOR WILL HAVE BARS AT 200mm MAXIMUM ON CENTERS WITH A MINIMUM 300mm HOOK AT CORNERS AND INTERSECTIONS.
3. THE TOP SHALL HAVE BARS INSTALLED AS SHOWN AT A MINIMUM OF 50mm FROM THE OPENING AND WITH A MINIMUM 100mm SPACING BETWEEN BARS.

NOTE: REINFORCING SHALL BE INCREASED WHERE REQUIRED TO SUIT ACTUAL INSTALLATION. MINIMUM REQUIREMENTS ARE FOR A H20 WHEEL LOADING (ASSHTO).

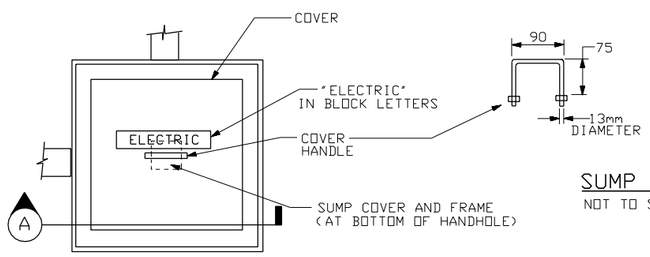

HANDHOLE COVER DETAIL
NOT TO SCALE

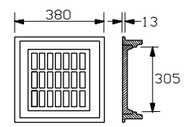

SUMP FRAME AND COVER DETAIL
NOT TO SCALE

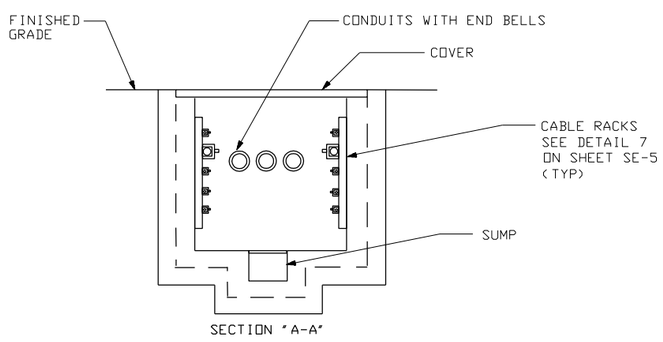

HANDHOLE DETAIL
NOT TO SCALE

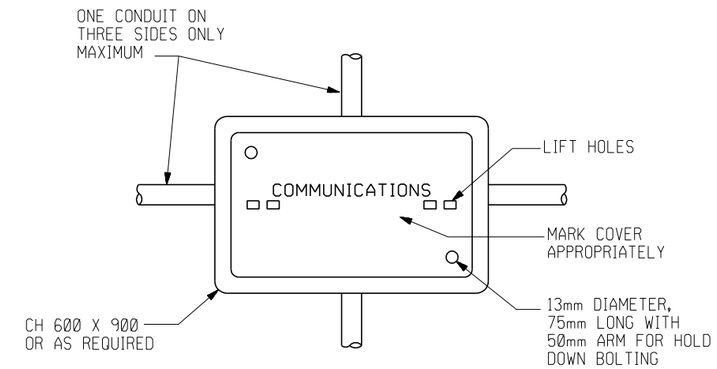

PLAN

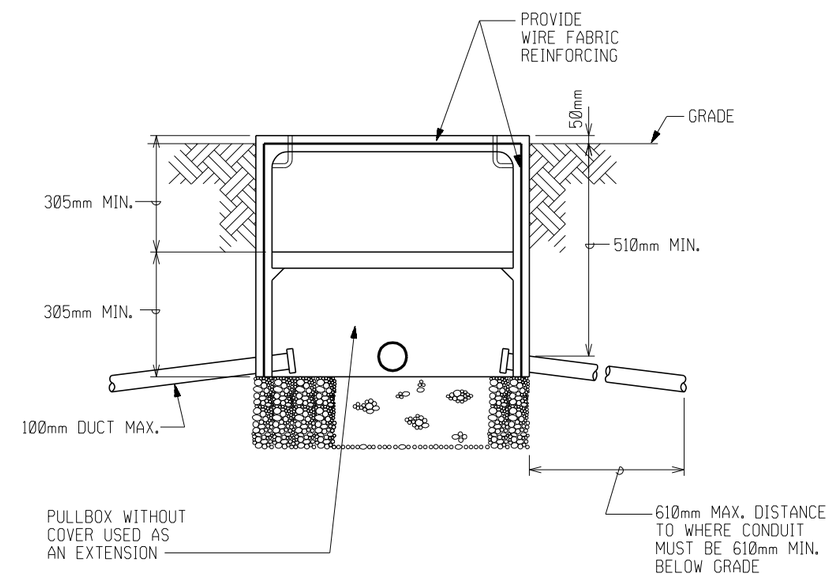

ELEVATION

COMMUNICATIONS AND SIGNAL CIRCUIT

PULLBOX DETAIL

UNLESS OTHERWISE NOTED, LINEAR DIMENSIONS SHOWN ARE IN MILLIMETERS.

SYMBOL	DESCRIPTION	DATE	APP

DESIGNED BY: MM
DATE: 02-05-07
DWN BY: MM
SUBMITTED BY: SYED ENAYATULLA, CHIEF, PDT BLDG SYSTEMS
CHK BY: SE
FILE NO.: AF0701 $-EL08DT

US Army Corps of Engineers
Transatlantic Programs Center

AFGHAN NATIONAL POLICE HEADQUARTERS (2 STORY) COMPOUND
AFGHANISTAN
STANDARD DETAILS
HAND HOLE DETAILS

SHEET REFERENCE NUMBER:
SE-8

3/9/2007
h:\projects\afghanistan\af0701\general\ele\AF0609$-el08DT.DWG

SECTION SF 30 BLOCK 14 CONTINUATION PAGE

SUMMARY OF CHANGES

SECTION 00800 - SPECIAL CONTRACT REQUIREMENTS

The following have been modified:
SECTION 01015

SECTION 01015
Revised
TECHNICAL REQUIREMENTS

1. GENERAL

1.1 The Contractor's site adaptation of the design and construction must comply with technical requirements contained herein. All requirements set forth in Section 01010 (Scope of Work) but not included in the Technical Requirements, shall be considered as set forth in both, and vice versa. The Contractor shall provide design and construction using the best blend of cost, construction efficiency, system durability, ease of maintenance and environmental compatibility.

1.2 These design and product requirements are minimum requirements. The Contractor is encouraged to propose alternate design or products (equipment and material) that are more commonly used in the region; will be equally or more cost effective or allow for more timely completion, but furnish the same system durability, ease of maintenance and environmental compatibility. The Contractor will be required to submit information as requested by the Contracting Officer to make a comparison of the proposed alternate. All variations must be approved by the Contracting Officer.

1.3 ASBESTOS CONTAINING MATERIALS

Asbestos containing material (ACM) shall not be used in the design and construction of this project. If no other material is available which will perform the required function or where the use of other material would be cost prohibitive, a waiver for the use of asbestos containing materials must be obtained from the Contracting Officer.

1.4 SAFETY

1.4.1 Unexploded Ordnance (UXO)

The Contractor shall perform search and clearing operations for clearance of mines and UXO’s and provide the government a letter indicating that the site is clear of unexploded ordnance and is available for construction operations to proceed. The Contractor shall be responsible for clearing the entire site of all mines and unexploded ordnance (UXO). All mine and UXO clearing shall be done in accordance with the International Mine Action Standards (IMAS), or Afghanistan Mine Action Standards (AMAS) whichever is more stringent, and clearance shall be accomplished to the anticipated foundation depth. These standards can be found at http://www.mineactionstandards.org/imas.htm. No work will commence in any area that has not been cleared. If during the performance of the work under this contract, the Contractor encounters U.S. UXO, the Contractor is to immediately stop work in this area and notify the Contracting Officer.

NOTE: For previous de-mining information, the following points of contact from the UN Mine Action Center for Afghanistan are provided:

Reiko Kurihara, project manager, email reiko@unmaca.org
Cell phone: +93 070 284 686

Sandy Powell, chief Operations Officer, sandy@unmaca.org
Cell phone: +93 (0) 79 330 992

1.4.1.1 Unexploded Ordnance (UXO) Safety Support During Construction

It is the responsibility of the Contractor to be aware of the risk of encountering UXO and to take all actions necessary to assure a safe work area to perform the requirements of this contract. If after the entire site has been cleared of UXO/mines per the International Mine Action Standards (IMAS) and clearance is done to the anticipated foundation depth, the Contractor becomes aware of or encounters UXO or potential UXO during construction, the Contractor shall immediately stop work at the site of the encounter, move to a safe location, notify the COR, and mitigate any delays to scheduled or unscheduled contract work.

1.4.1.2 Explosives Safety

1.4.1.2.1 General Safety Considerations

General safety considerations applicable to personnel, both essential and non-essential, at project sites where UXO may be encountered include:

a. Do not carry fire or spark-producing devices.
b. Do not conduct explosive or explosive-related operations without approved procedures and proper supervision and UXO safety support.
c. Do not become careless by reason of familiarity with UXO or the reported probability level of UXO contamination.
d. Do not conduct explosive or potentially explosive operations during inclement weather.
e. Avoid contact with UXO except during UXO clearance operations.
f. Conduct UXO-related operations during daylight hours only.
g. Employ the "buddy system" at all times.

1.4.1.2.2 Activity Hazard Analysis (AHA) Briefings

a. Activity Hazard Analysis's shall be prepared in accordance with the Corps of Engineers Safety and Health Requirements Manual, EM 385-1-1.

b. Hazard analyses will be prepared and briefed by personnel that are knowledgeable in UXO and explosives safety standards and requirements. These personnel should understand the specific operational requirement and hazard analysis methodologies. A hazard analysis will be performed for each activity to determine the significance of any potential explosive-related hazards. Explosive residues may be discovered or exposed during UXO operations in the form of powder or various granular and powder based pellets. These contaminants can enter the body through the skin or by ingestion if proper personal hygiene practices are not followed. Explosive fillers such as white phosphorus are dangerously reactive in air and acute exposure can result in serious injury to the skin, eyes, and mucous membranes. They are also a fire hazard.

Safety requirements (or alternatives) that will either eliminate the identified hazards, mitigate or control them to reduce the associated risks to an acceptable level will be developed. The adequacy of the operational and support procedures that will be implemented to eliminate, control, or abate identified hazards or risks will then be evaluated and a second risk assessment completed to verify that a satisfactory safety level has been achieved.

1.4.1.3 Notification of Noncompliance

The Contracting Officer will notify the Contractor of any detected noncompliance with the foregoing requirements. The Contractor shall take immediate corrective action after receipt of such notice. Such notice, when delivered to the

Contractor at the work site, shall be deemed sufficient for the purpose of notification. If the Contractor fails or refuses to comply promptly, the Contracting Officer may issue an order stopping all or part of the work until satisfactory corrective action has been taken. The Contractor shall make no part of the time lost due to such stop orders the subject of claim for extension of time or for excess costs or damages.

1.5 LIMITATION OF WORKING SPACE

The Contractor shall, except where required for service connections or other special reasons, confine his operations strictly within the boundaries of the site. Workmen will not be permitted to trespass on adjoining property. Any operations or use of space outside the boundaries of the site shall be by arrangement with all interested parties. It must be emphasized that the Contractor must take all practical steps to prevent his workmen from entering adjoining property and in the event of trespass occurring the Contractor will be held entirely responsible.

Areas located immediately outside the construction area are known to contain mines and unexploded ordnance (UXO). Contractors assume all risks when venturing in or out of the designated work area.

1.6 TEMPORARY STRUCTURES

The Contractor shall erect suitable temporary fences, lighting, and necessary structures to safeguard the site, materials and plant against damage or theft and for the protection of the general public and shall adequately maintain the same throughout the course of the contract.

1.7 SUBCONTRACTORS

Compliance with the provisions of this section by subcontractors will be the responsibility of the contractor.

1.8 LIST OF CODES AND TECHNICAL CRITERIA

The following codes and technical criteria and those referenced therein shall be required for this project. References within each reference below shall be required and adhered to. This list is not exhaustive and is not necessarily complete.

American Water Works Association, ANSI/AWWA C651-99 standard
ASCE 7-02, Minimum Design Loads for Buildings and Other Structures, 2002
ASTM - American Society for Testing and Materials
AWS - American Welding Society
EIA ANSI/TIA/EIA-607: (1994) Commercial Building Grounding/Bonding Requirement Standard.
Factory Mutual (FM) Approval Guide-Fire Protection (2002).
IBC - International Building Code (and its referenced codes including those inset below)
IPC – International Plumbing Code
Lighting Handbook, IESNA, latest edition
Codes and Standards of the National Fire Protection Association (NFPA)
[as applicable and enacted in 2003, unless otherwise noted].
NFPA 10, Portable Fire Extinguishers, 2002 edition
NFPA 70, National Electrical Code, 2005 edition
International Mine Action Standards, latest edition; see http://www.mineactionstandards.org for copy of standards.
UFC 1-200-01, Design: General Building Requirements, 31 July 2002
UFC 3-230-19N Water Supply Systems
UFC 3-240-03, Operation and Maintenance: Wastewater Treatment System Augmenting Handbook
UFC 3-240-04A Wastewater Co.llection
UFC 3-240-07FA Sanitary and Industrial Wastewater Collection
UFC 3-280-01A Guidance for Ground Water/Fuel Extraction and Ground Water Injection Systems
UFC 3-230-17FA Drainage in Areas Other than Airfields

Underwriters' Laboratories (UL) Fire Protection Equipment Directory (2002).

The publications to be taken into consideration shall be those of the most recent editions. Standards other than those mentioned above may be accepted if the standards chosen are internationally recognized and meet the minimum

requirements of the specified standards. The Contractor shall be prepared to submit proof of this if requested by the Contracting Officer.

2. SITE DEVELOPMENT

The project includes furnishing all materials, equipment and labor for constructing water, sanitary sewer and storm sewer systems, as applicable. Work also includes, but is not limited to, geotechnical and topographic surveys, site clearing and grading , demolition, installation of roads and sidewalks, perimeter wall and gates, entry control points, and other facilities as described in Section 01010.

2.1 GEOTECHNICAL, FOUNDATIONS AND SURVEY

2.1.1 General

The foundations shall be constructed using reinforced concrete materials as shown on the drawings and stated in the specifications. A bearing capacity of 0.75 kg/sq. cm was assumed and used in designing the building foundations; see foundation plans and paragraph 5, STRUCTURAL. The contractor is responsible for performing a geotechnical investigation to determining if the assumed bearing capacity and foundations as shown and designed will perform satisfactory. The maximum allowable settlement between footings shall be less than 2.5 cm. If the contractor determines, after completing his geotechnical investigation, that the foundations as designed will not perform satisfactory, the contractor shall redesign the foundations accordingly. The contractor is responsible for the design and construction of the foundations.

2.1.2 Geotechnical Investigation

The contractor shall perform a site specific geotechnical investigation to verify the foundations, pavements, material, earthwork and any other geotechnical related items shown on the contract drawings and specifications will perform satisfactory. The contractor shall determine all necessary geotechnical conditions by appropriate field and laboratory testing and analyses.

2.1.3 Geotechnical Qualifications

A geotechnical engineer or geotechnical firm responsible to the contractor shall develop all geotechnical engineering design parameters. The geotechnical engineer or geotechnical firm shall be qualified by: education in geotechnical engineering; professional registration; and a minimum of ten (10) years of experience in geotechnical engineering design.

2.1.4 Design Certification

The contractor shall certify in writing that the design of the project has been developed consistent with the site-specific geotechnical conditions. The certification shall be stamped by the geotechnical engineer of the geotechnical firm and shall be submitted with the final design.

2.1.5 Survey and Mapping

2.1.5.1 General Work to be performed - Conduct topographic survey, mapping and documentation of the project site to include surface physical features, buildings, existing utilities, hydrological, geological, botanical or other physical conditions that could impact design. Topographic survey data shall include horizontal and vertical (H&V) controls. The limits of the survey shall be 10 meter outside of the anticipated construction area and 15 meter wide along utility lines to be replaced.

2.1.5.2 For Horizontal and Vertical Control, the surveyor shall use established monuments, if available. If monuments have been destroyed or do not exist, the mapping shall be based on WGS84 geodetic system and converted to UTM coordinates. All site plans and master plans shall be drawn in the following projection and datum for incorporation into the U.S. Army Corps of Engineers GIS system: WGS 1984 UTM Zone 42 N. The horizontal

and vertical control established on site shall be a closed loop with third order accuracy and procedures.

2.1.5.3 All of the existing control points used at the site shall be plotted at the appropriate coordinate point and shall be identified by name or number, and adjusted elevations.

2.2 ENVIRONMENTAL PROTECTION

2.2.1 Applicable Regulations

The Contractor shall comply with all Afghani laws, rules, regulations or standards concerning environmental pollution control and abatement with regard to discharge of liquid waste into natural streams or manmade channels. The Contractor shall review local environmental regulations with the contracting officer prior to design and discharge of any liquid wastes into natural streams or manmade channels.

2.2.2 Notification

The Contracting Officer will notify the Contractor in writing of any observed non-compliance with the foregoing provisions. The Contractor shall immediately take corrective action. If the Contractor fails or refuses to promptly take corrective action, the Contracting Officer may issue an order stopping all or part of the work until satisfactory corrective action has been taken. No extension of time or damages will be awarded to the Contractor unless it was later determined that the Contractor was in compliance.

2.2.3 Spillages

Measures shall be taken to prevent chemicals, fuels, oils, greases, bituminous materials, waste washings, herbicides and insecticides, and construction materials from polluting the construction site and surrounding area.

2.2.4 Disposal

Disposal of any materials, wastes, effluents, trash, garbage, oil, grease, chemicals, etc., shall be taken to a dumpsite off site and subject to the approval of the Contracting Officer. Burning at the project site for the disposal of refuse and debris will not be permitted.

2.3 CIVIL SITE DEVELOPMENT

2.3.1 Site Plan

The contractor shall locate the facilities in general agreement with the drawings included and any requirements in these technical specifications.. All buildings, roads, parking areas, entry control points, guard towers, fence, utility structures, and other site features shall be clearly defined and dimensioned on the site plan. Buildings shall be located to provide access for emergency vehicles and fire fighting. Roads and parking areas shall be designed for turning radius of the largest vehicle entering the compound.

2.3.2 Demolition

Demolition shall include removal of all structures, foundations, pavements, and utilities, and clearing and grubbing. All refuse and debris shall be disposed of off site. Holes and depressions shall be backfilled. Fill materials shall be composed of satisfactory soils or aggregates defined in ASTM D 2487 as GW, GP, GM, SP, SM, SW, CL-ML. Minimum soil compaction shall be 95 percent of maximum density as defined in ASTM D 1557.

2.3.3 Grading and Drainage

The contractor will provide all necessary site grading to insure adequate drainage so that no buildings or pavements will be flooded due to a rainfall of a 10-year frequency. Drainage of the area should be compatible with the existing terrain. Building floor elevations shall be a minimum 150 mm above finish grade. Finished grades shall slope away from the building on all sides at a minimum of 2%.

2.3.4 Paving

2.3.4.1 Roads

Contractor shall construct roads and parking areas using aggregate surface. Subgrade shall be a minimum of 150mm (6 inches) minimum in depth scarified and compacted to 95% proctor density. Aggregate surfacing shall be a minimum of 150mm (6 inches). All roads shall be of wearing surface 7.3 meters (24 feet) wide, unless otherwise noted, graded for proper drainage, provided with necessary drainage structures and completed with prescribed surfaces in accordance with applicable sections of TM 5-822-2 and TM 5-822-5 standards. If geotechnical report indicates that thicker pavement sections are required then the Contractor shall adjust thicknesses accordingly. Aggregate surfacing material must be well graded, durable aggregate uniformly moistened and mechanically stabilized by compaction. Degree of compaction shall be expressed as a percentage of the maximum density obtained by the test procedure presented in ASTM D 1557or equivalent DIN, BS, or EN standards.

2.3.4.2 Bridges and Site Grading Plan

The Contractor shall notify the Contracting Officer immediately if initial site survey determines that area hydrology requires major drainage structures or bridges. The contractor shall design a site grading plan that provides positive drainage and minimizes the requirement for major structures in a cost effective manner. Drainage shall be designed for a 10 year storm frequency.

2.3.4.3 Sidewalks

Sidewalks shall be provided to connect parking areas with buildings and adjoining buildings where foot traffic is anticipated. Sidewalks shall be constructed with aggregate surfacing. Aggregate surfacing shall be 100mm (4 inches). Aggregate surfacing material must be well graded, durable aggregate uniformly moistened and mechanically stabilized by compaction.

2.3.5 Masonry/Stone Compound Walls

2.3.5.1 Exterior Compound Wall

Construct perimeter walls where indicated on the site plan from masonry or native stone when available, as shown on drawing details. Install outriggers and single-strand concertina wire on top of the wall. The walls shall measure at least 2.4 m high with a thickness of the walls not less than 0.60 m.

2.3.5.2 Gates

The gates shall be swing type. Hinged gates shall be a pair of 3.65 m wide x 2.4 m high leafs, constructed of a steel tube frame and steel tube intermediate posts and rails. The design of the gates shall insure that it is dimensionally

stable, square, true and planar. Gate leafs shall not rack or deflect when install on its hinges. Gates shall have a sufficient number of hinges; anchor mounted to the exterior masonry walls, to support each gate leaf. Provide a locking mechanism that holds the gates together when in the closed position as well as a drop bolt that engages a steel sleeve embedded in the pavement.

2.3.5.3 Reinforced Barbed Tape

Reinforced barbed tape shall be 600 mm diameter concertina style coil consisting of 31 loops. Each loop shall consist of 19 barb clusters per loop. Adjacent coils loops shall be alternately clipped together at three points about the circumference to produce the concertina effect upon deployment. Spacing between attachments points when deployed shall be 400 mm. The reinforced barbed tape shall be fabricated from 430 series stainless steel with hardness range of Rockwell (30N) 37-45 conforming to the requirements of ASTM A 176. Each barb shall be a minimum of 30.5 mm (1.2 inch) in length, in groups of 4, spaced on 102 mm (4 inch) centers. The stainless steel core wire shall have a 2.5 mm (0.098 inch) diameter with a minimum tensile strength of 895 MPa. Sixteen gauge stainless steel twistable wire ties shall be used for attaching the barbed tape to the barbed wire. The reinforced barbed tape shall be equivalent to NSN: 5660-01-457-9852.

2.3.5.4 Outriggers

Outrigger supporting arms shall be “Y” shaped with post securely embedded into the top of the wall. Posts shall conform to ASTM F 1083, Pipe, Steel, Hot Dipped Zinc Coated (Galvanized) Welded.

2.3.5.5 Vehicle Barriers

2.3.5.5.1 Active Barriers

Active barriers shall be tire shredder type with manual latch down capability. Shredders shall extend the entire width of the roadway opening where installed.

2.3.5.5.2 Drop Arm Gates

The height of the beam shall be a minimum of 30 inches above finished grade. The crash beam must be capable of blocking a minimum road width of 4.0 meters. The crash beam shall be manually raised and lowered with less than 30 pounds of force using counter balance. The end of the crash beam should include a locking pin with padlock acceptance for securing the beam when it is in the down position.

2.3.5.5.3 Passive Barriers

Barriers shall be concrete blocks of one meter by one meter by one meter dimensions. Similar arrangements of Concrete jersey barriers, large stones (one cubic meter size), concrete filled 55-gal drums or equal sized obstacles may be used.

2.3.6 Civil Utilities

2.3.6.1 General

The design of the water and sanitary systems shall be sized to provide flow and discharge based on a fixture unit basis. The design drawings shall show all utility lines, line sizes, valves, manholes, disinfection systems, and applicable details associated with water and sanitary system designs. Specifications covering water lines, valves, pumps, controls, sanitary sewers and storm sewers shall be submitted as part of the design and shall require standard materials that are available in-country. Contractor shall install and connect exterior sanitary sewer collection and water supply piping to service connection points of each facility.

2.3.6.2 Water Supply The contractor shall construct water well(s) inside the compound, to provide sufficient supply for the facility. If unavailable within the compound, Contractor shall notify the COR for resolution. Off site

water wells then may become a possibility. Unless noted elsewhere, wells shall be capable of supplying one day demand with 16 hours of pumping time. Well construction shall be in accordance with AWWA A100 Water Wells.

Well installation - Well shall be drilled or augured to a minimum depth of 20 meters below the existing water table. Refer to contract documentation (drawings and technical provisions) for installation of well and pump.

Casing - In unconsolidated material, casing shall be extended to the top of the well screen. In rock formations (drilled wells) the hole may be left open with casing extended 3 meters into the rock formation. All wells will be cased 0.5 m above grade (i.e., base of pit, ground surface, etc.) and be fitted with a lockable cap with air gap (vacuum relief during pumping). Each section of casing will be joined with standard couplings and full-threaded joints, or by proper welding, so that all joints are sound and watertight. Well casing alignment shall not interfere with the proper installation and operation of the pump. The bottom of the casing will be fitted with a metal or PVC well screen that will permit maximum transmission of water without clogging. The minimum length of screen shall be at least 3 meters. A base plate with reverse ball valve (check valve) will be placed at the base of the screen. A watertight Pump suction pipe will be placed inside the casing, with a submerged piston pump cylinder at the base of the pipe. The piston pump cylinder will be no more than 1.5 m from the base of excavation. The pump suction pipe will have a weep hole in pipe 2.0 meters below grade. Casing size shall be 100mm to 200mm in inside diameter. Casing material shall be Schedule 40 steel, Schedule 40 PVC, or equivalent material.

Sealing - The drilling process will create a hole (borehole) larger than the casing. The entire space between the casing and the edge of the borehole will be filled with gravel, overburden, or concrete as follows:

a. The upper 3 meters of the well bore will be sealed with cement grout. Grout shall be placed in one continuous mass and be impermeable.

b. The space around the well screen will be filled with crushed stone or gravel (gravel pack). Average gravel particle size will be approximately 1 centimeter in diameter.

c. The space between the top of the gravel pack and the base of the grout seal may be backfilled with overburden or other clean earth material.

Disinfection - Disinfection of the source will be provided in accordance with locally accepted methods and standards. At a minimum the source will be developed until all suspended material associated with drilling have been removed.

Source protection - Surface drainage within 30 m of wellhead will ensure no ponding, flooding or collection of runoff adjacent to the well. This can be accomplished through surface grading or use of gravel drains to modify site drainage in the vicinity of the well. Contractor will identify all sources of contamination and ensure the proposed well site meets minimum standoff distances as indicated below:

Sewage storage areas (outhouses, tanks, individual sewage pits) – 30 m
Septic fields (infiltration galleries) - 30 m
Animal pens and yards – 60 m
Fuel storage, engine maintenance/repair – 30 m

Pumps - A standard hand pump will be attached to well with approved seal and air gap with concrete pad around it.

Crushed stone for well sealing - Shall consist of crushed stone containing angular shapes and surfaces with no rounded surfaces with the following gradation:

Sieve Size	% Total Wt. Passing
12.5 mm	100
4.75 mm	75 +/- 13
1.18 mm	25 +/- 15
75 um	8 +/- 4

All aggregate shall contain less than 5% of shale, clay lumps, coal, lignite, soft or unfragmented stone, or other deleterious materials.

Cement Grout for well sealing - Mixture shall consist of one part Portland cement to 4 parts washed sand. Water shall be mixed to produce a flowable consistency in order to fill all cracks and voids around the well casing.

Concrete - Mixture shall consist of seven sacks per cubic meter. Each sack is 49 kg of Portland cement. The mix ratio shall be 1:2:4 (Portland cement: sand: crushed angular aggregate (12.5 mm max)).

Quality control and testing

a. Pump Testing: In order to ensure that the source is capable of providing the required demand capacity, the completed well shall be tested for yield and drawdown by pumping at a minimum sustained rate of 20 liters/minute for four hours duration. The well must maintain a minimum head under sustained pumping conditions of ¼ the depth of the well. (for example, for a 40m deep well, head should be maintained at 10m from the bottom of the well).

b. Water quality testing: Water will be provided from the source that is acceptable for the intended use. Sources that do not meet the requirements of the intended use will be deemed unacceptable and another source must be established at no additional cost. Water quality testing (i.e., bacteria, chemical, turbidity, etc.) will be conducted in accordance with locally accepted methods and standards.

c. Well house: At new wells, construct a permanent well house. The floor of the well house shall slope away from the casing approximately 1 cm per 100 cm (1/8” per foot). Floor of well house shall be above floodplain. The well house design should be such that the well pump, motor and drop pipe could be removed readily. The well house shall protect valves and pumping equipment plus provide freeze protection for the pump discharge piping beyond the check valve. The well house shall be insulated. The well house shall have door locks and hatch lock on roof.

The well is to be drilled at a location recommended in writing by the contractor. The water source should be located at the highest elevation possible within the adjacent area. The well house shall have a 2.4 meter high chain link security fence with gate surrounding it. The fence and gate shall be topped with barbed wire and outriggers.

d. The site population is 120 personnel.

2.3.6.3 Water Storage

Tank capacity shall be at least 6,000 gallons (1 day at a use of 50 gal per person per day). The tank shall be adjacent to the well house and Booster Pump Station as indicated on the drawings. The tank shall be concrete as indicated on drawings.

The tank shall be lined with sheet material. Material shall be chlorosulfonated polyethylene 1.14 mm thick with a plus or minus 0.100 mm, thickness tolerance. The liners shall be Hypalon product, or approved equal, NSF 54 and NSF 61 approved for potable water storage. White material is required so that any mechanical damage to the liner can be easily found when the tank is empty. Potable grade chlorosulfonated polyethylene reinforced liner shall be compounded from the first quality material and specifically can be used in hydraulic structures. Only virgin materials shall be used with no regrind or reprocessed materials added. The liner compound shall be specifically designed for liner applications. The liner shall be constructed from two plies of sheeting laminated together over one ply of 10 x 10 - 1000 denier polyester fabric. Liner resin shall comprise greater than 45% by weight of the total sheeting formulation. Fabric shall be fully encapsulated by same material at roll edges. Exposed fabric will not be accepted. The finished lining shall be a sunlight and weather resistance membrane that is flexible, durable, watertight and free from pinholes, blisters and contaminants. The liner shall not impart any impurity to the water so as to render it impotable for human consumption.

Contractor shall design hypochlorite system for disinfection. A hypo-chlorinator shall be used to feed a sodium hypochlorite solution of 5-15% available chlorine into the system. Hypochlorite compound may be a liquid or solid form. The hypo chlorination system shall consist of a chemical solution tank for hypochlorite, diaphragm-type pump, power supply, water pump, pressure switch and storage tank. The pump shall feed a hypochlorite solution in proportion to the water demand. The hypo-chlorinator shall have a pumping rate, liters per day (lpd) adequate to deliver 5 percent available hypochlorite solution adjustable to the quantity of water being produced from the source. Dosage rate will vary somewhat depending on actual pump production rate and available residual chlorine in the system. Contractor shall determine the required dosage rate milligrams per liter (mg/l) to maintain the required chlorine residual (usually 0.2-0.4mg/l) in the distribution system. Chlorine solution tank shall be large enough to hold a three days supply of hypochlorite solution. A fresh solution shall be prepared every two or three days because the solution may lose its strength over time and this will affect the actual chlorine feed rate. The hypochlorite shall be stored in a cool dry place. Sodium hypochlorite can lose from two to four percent of its available chlorine content per month at room temperature. Contractor shall verify required minimum residual chlorine in accordance with local requirements verified and approved by the Contracting Officer. The chlorination system shall have the capability for manually adjusting the dosage rate and be installed in such a manner that the system can be easily disconnected and bypassed in the event of health safety or routine maintenance and repair.

Contractor shall locate the hypochlorite system in the Well House.. The Contractor shall provide manufacturers catalog information and shop drawing to the Contracting Officer for approval.

2.3.6.4 Water Distribution

The Contractor shall provide a hydro pneumatic system with pumps, hydro pneumatic tank and other appurtenances as necessary to supply the pressure required to all facilities. The equipment shall be protected from the environment, especially freezing temperatures. The distribution system shall be designed to provide a minimum 276 kPa (40 psi) at ground level at all points in the systems. Minimum pressures of 207 kPa (30 psi), under peak domestic flow conditions, can be tolerated in small areas as long as all peak flow requirements can be satisfied. Maximum water pressures in distribution mains and service lines shall not exceed 517 kPa (75 psi) at ground elevation.

The Contractor shall install water distribution mains, branches, laterals, lines and service connections to include all pipe, valves, fittings and appurtenances. Exterior water line construction shall include service to all buildings as described in the Scope of Work. Adequate cover must be provided for frost protection. The required Average Daily Demand (ADD) is 50 gallons per capita per day (gpcd). Provide one outside water tap per building for landscaping purposes.

The Contractor shall provide pipe of adequate strength, durability and be corrosion resistant with no adverse effect on water quality. The exterior surface of the pipe must be corrosion resistant. If the pipe is installed underground pipe shall be encased with polyethylene in accordance with AWWA C105. Water distribution pipe material shall be PVC or Ductile Iron (DI). Ductile iron pipe shall conform to AWWA C104, et al. DI fittings shall be suitable for 690kPa (75psi) pressure unless otherwise specified. Fittings for mechanical joint pipe shall conform to AWWA C110. Fittings for use with push-on joint pipe shall conform to AWWA C110 and C111. Fittings and specials shall be cement mortar lined (standard thickness) in accordance with C104. Polyvinyl Chloride (PVC) pipe shall conform to ASTM D 1785. Plastic pipe coupling and fittings shall be manufactured of material conforming to ASTM D 1784, Class 12454B. PVC screw joint shall be in accordance with ASTM D 1785. PVC pipe couplings and fittings shall be manufactured of material conforming to ASTM D 1784, Class 12454B. Pipe less than 80mm (3 inch), screw joint, shall conform to dimensional requirements of ASTM D schedule 80. Elastomeric gasket-joint, shall conform to dimensional requirements of ASTM D 1785 Schedule 40. All pipe and joints shall be capable of 690kPa (75psi) working pressure.

2.3.6.5. Hydrostatic, Leakage and Disinfection Tests

The Contracting Officer will be notified not less than 48 hours in advance of any water piping test and will be given full access for monitoring testing procedures and results. Where any section of water line is provided with concrete thrust blocking for fittings or hydrants tests shall not be made until at least 5 days after installation of the concrete

thrust blocking, unless otherwise approved.

2.3.6.5.1 Pressure Test

After the pipe is laid, the joints completed, and the trench partially backfilled leaving the joints exposed for examination, the newly laid piping or any valve section of piping shall, unless otherwise specified, be subjected for 1 hour to a hydrostatic pressure test of 690kPa (75psi). Each valve shall be opened and closed several times during the test. Exposed pipe, joints, fittings, hydrants and valves shall be carefully examined during the partially opened trench test. Joints showing visible leakage shall be replaced or remade as necessary. Cracked or defective pipe, joints, fittings, hydrants and valves discovered following this pressure test shall be removed and replaced and retested until the test results are satisfactory.

2.3.6.5.2 Leakage Test

Leakage test shall be conducted after the pressure tests have been satisfactorily completed. The duration of each leakage test shall be at least 2 hours and during the test the water line shall be subjected to not less than 690kPa (75psi). Leakage is defined as the quantity of water to be supplied into the newly laid pipe, or any valve or approved section, necessary to maintain pressure to within 34.5kPa (5 psi) of the specified leakage test pressure after the pipe has been filled with water and the air expelled. Pipe installation will not be accepted if leakage exceeds the allowable leakage, which is determined by the following formula:

L = 0.0001351ND (P raised to 0.5 power) L = Allowable leakage in gallons per hour N = Number of joints in the length of pipeline tested D = Nominal diameter of the pipe in inches P = Average test pressure during the leakage test, in psi gauge

Should any test of pipe disclose leakage greater than that calculated by the above formula, the defective joints shall be located and repaired until the leakage is within the specified allowance, without additional cost to the government.

2.3.6.5.3 Disinfection Procedure

Before acceptance of potable water operation, each unit of completed waterline shall be disinfected as prescribed by AWWA C651. After pressure tests have been completed, the unit to be disinfected shall be thoroughly flushed with water until all entrained dirt and mud have been removed before introducing the chlorinating material. Flushing will be performed in a manner and sequence that will prevent recontamination of pipe that has previously been disinfected. The chlorinating material shall be liquid chlorine, calcium hypochlorite, or sodium hypochlorite. The chlorinating material shall provide a dosage of not less than 50 ppm and shall be introduced into the water lines in an approved manner. Polyvinyl Chloride (PVC) pipelines shall be chlorinated using only the above-specified chlorinating material in solution. The agent shall not be introduced into the line in a dry solid state. The treated water shall be retained in the pipe long enough to destroy all non-spore forming bacteria. Except where a shorter period is approved, the retention time shall be at least 24 hours and shall produce not less than 25 ppm of free chlorine residual throughout the line at the end of the retention period. Valves on the lines being disinfected shall be opened and closed several times during the contact period. The line shall then be flushed with clean water until the residual chlorine is reduced to less than 1.0 ppm. During the flushing period, each fire hydrant on the line shall be opened and closed several times.

2.3.6.5.4 Sampling

For each building connected to the water system, personnel from the Contractor's commercial laboratory shall take at least 3 water samples from different points, approved by the Contracting Officer, in proper sterilized containers and perform a bacterial examination in accordance with approved methods. The commercial laboratory shall be verified to be qualified by the appropriate authority for examination of potable water.

2.3.6.5.5 Acceptance Requirements

The disinfection shall be repeated until tests indicate the absence of pollution for at least two full days. The unit will not be accepted until satisfactory bacteriological results have been obtained.

2.3.6.5.6 Time for Making Tests

Except for joint material setting or where concrete thrust blocks necessitate a 5-day delay, pipeline jointed with rubber gaskets, mechanical or push-on joints, or couplings may be subjected to hydrostatic pressure, inspected and tested for leakage at any time after partial completion of backfill.

2.3.6.5.7 Concurrent Tests

The Contractor may elect to conduct the hydrostatic tests using either or both of the following procedures. Regardless of the sequence of tests employed, the results of pressure tests, leakage tests, and disinfection shall be recorded for submission and approval. Replacement, repair or retesting required shall be accomplished by the Contractor at no additional cost to the Government.

a. Pressure test and leakage test may be conducted concurrently,

b. Hydrostatic tests and disinfection may be conducted concurrently, using water treated for disinfection to accomplish the hydrostatic tests. If water is lost when treated for disinfection and air is admitted to the unit being tested, or if any repair procedure results in contamination of the unit, disinfection shall be re-accomplished.

2.3.6.6 Sanitary Sewer

a. Construct a sanitary sewer system in accordance with the contract documentation, providing service from all buildings requiring sewage collection.. Leach fields and septic tanks are specified in the contract documentation. Leach fields and septic tanks are to be located inside the perimeter compound (see site plan). If leach field is found to be unsuitable, the Contractor shall notify the COR. Septic tank capacity shall be a minimum of 5000 gallons. Leach field shall be sized to accommodate the average daily flow of 4800 gallons per day.

b. Exterior sanitary sewer line construction includes service to all buildings requiring sewage collection. Contractor shall construct the sanitary sewer collection system using finished floor elevations. Main collection sewers will follow the most feasible route to the point of discharge. The sewer collection system shall be constructed to accommodate the facility. Construction required shall include appurtenant structures and building sewers to points of connection with Building drains 1.5m outside the building, to which the sewer collection system is to be connected.

c. The Contractor shall use the following criteria where possible to provide a layout which is practical, economical and meets hydraulic requirements:

- Follow slopes of natural topography.

- Avoid routing sewers through areas which require extensive restoration or underground demolition.

- Avoid areas of high groundwater and placement of sewer below the groundwater table.

- Locate manholes at change in direction, size or slope of gravity sewers.

- Use straight sections between manholes, curved alignment shall not be permitted.

- Avoid placing manholes where the tops will be submerged or subject to surface water inflow.

- Evaluate alternative sewer routes where applicable.

- Verify that final routing selected is the most cost effective alternative that meets service requirements.

d. Protection of water supplies - Unless noted elsewhere, the Contractor shall construct an appropriate size leach field inside the district headquarter compound; ensure that the sewer design meets the following criteria:

- Sanitary sewers will be located no closer than 15m horizontally to water wells or reservoirs to be used for potable water supply.

- Sanitary sewers will be no closer than 3m horizontally to potable water lines; where the bottom of the water pipe will be at least 305mm above the top of the sanitary sewer, horizontal spacing shall be a minimum of 1.8m.

- Sanitary sewers crossing above potable water lines shall be constructed of suitable pressure pipe or fully encased in concrete for a distance of 2.7m on each side of the crossing. Pressure pipe will be as required for force mains in accordance with local standards and shall have no joint closer than 0.9m horizontally to the crossing, unless the joint is encased in concrete.

- Sanitary sewers shall be constructed to allow flow at 90 to 95 percent full. Sanitary sewer velocities shall be designed to provide a minimum velocity of 0.6 meters per second (mps) at the ADD flow rate and a minimum velocity of 0.8 to 1.05 mps at the peak diurnal flow rate. In no case shall the velocity drop below 0.3 mps, to prevent settlement of organic solids suspended in the wastewater. Pipe slopes shall be sufficient to provide the required minimum velocities and depths of cover on the pipe. Unless otherwise indicated. Gravity sewer pipe shall be installed in straight and true runs in between manholes with constant slope and direction. Adequate cover must be provided for frost protection. A minimum cover of 80cm will be required to protect the sewer against freezing.

- The Contractor shall provide standard depth manholes (MH), that best meets the specific depth required, with an inside dimension of 1.2 meters. Manholes shall be made of cast-in-place reinforced concrete with reinforced concrete cover. The manholes, frames and covers shall be traffic rated, H-20 load rating. All manholes shall be provided with a concrete bench with a flow line trough, smoothly formed to guide waste flow to the outlet pipe from the inlet pipe(s). The top surface of the bench shall be above the crown of all pipes within the manhole. All surfaces of the bench shall be sloped smoothly toward the trough to guide flow, even under peak flow conditions.

1) Manholes are required at junctions of gravity sewers and at each change in pipe direction, size or slope, except as noted hereinafter for building connections.

2) Spacing. The distance between manholes must not exceed 120m in sewers of less than 460mm in diameter. For sewers 460mm and larger, a spacing of up to 180m is allowed provided the velocity is sufficient to prevent the settlement of solids.

2.3.6.7 Storm Drainage System

2.3.6.7.1 Hydraulic Design

New storm drain pipes, if required, shall be designed for gravity flow during the 10-year design storm unless otherwise approved by the Government. The hydraulic grade line shall be calculated for the storm drain system and all energy losses accounted for.

2.3.6.7.2 Manholes

Diameter of manholes shall be large enough to accommodate pipes entering/exiting the manhole. Manhole cast iron frames shall have a minimum opening diameter of 600mm.

2.3.6.7.3 Area Inlets

Area inlets shall be properly sized and designed to accommodate the design flows.

2.3.6.7.4 Head walls and Flared End Sections

Unless otherwise approved, head walls or flared end sections shall be provided at the ends of culverts and at storm drain outfalls. Protection from erosion and scouring at head wall and flared end section outfalls shall be provided as needed.

2.3.6.7.5 Culverts

Culvert pipes shall have a minimum diameter of 450mm wherever possible.

2.3.6.7.6 Storm Drain and Culvert Pipe

The Contractor shall select the appropriate storm drain and culvert pipe materials from local sources. Pipe, bedding, and backfill shall be of adequate strength (or stiffness) to support the earth, live, and construction loads imposed on the pipe. If using an open channel earth ditch such asa trapezoidal or V-ditch, apply slope protection and erosion control measures on the surface of the ditch.

2.3.7 Trash Point

The Contractor shall place, in a location convenient for easy removal, a trash collection point. It shall be located outside the compound walls. The trash point shall be a 1.8 m X 1.8 m concrete pad with a 1.8 meter tall wooden fence about the perimeter. One side shall have a 1.2 m wide gate entrance.

3. NOT USED

4. ARCHITECTURAL

4.1 GENERAL

All material approved shall become standardized material to be used throughout the facilities under contract. Different sub-contractors shall not use different material or standards under the contract. Intent of the project is to use locally procured materials (unless specified otherwise) and labor to the maximum extent possible while satisfying seismic building code. Conflicts between criteria and local standards shall be brought to the attention of the Contracting Officer for resolution. In such instances, the Contractor shall furnish all available information with justification to the Contracting Officer.

4.2 DESIGN CRITERIA

The Codes, Standards, and Regulations listed below shall be used in the construction of this project. The publications shall be the most recent editions. Standards other than those mentioned may be accepted provided they meet the minimum requirements and the contractor shall submit proof of equivalency to the Contracting Officer for approval.

IBC- International Building Code

4.3 EXCAVATION

Trench excavation shall be made for concrete footings. Trenches shall be a minimum of .8 meter deep. Trenches deeper than 1.5 meters shall have protective shoring to protect workers or have the sides of the trench sloped back at a slope of 1.5:1. Care shall be taken when backfilling of foundation trenches to avoid damage to walls. Any excess dirt shall become the property of the Contractor and shall be removed from the site to a location approved by the Contracting Officer.

4.4 CONCRETE

Place 10cm (4”) of capillary water barrier below areas to receive a concrete slab on properly compacted soil free of organic material. A plastic vapor barrier (10 mils thick) shall be placed over the crushed stone prior to placing of concrete slabs. Concrete flooring in wet areas shall slope to the floor drain and not allow for water to puddle. Concrete slabs in all areas shall not be placed prior to inspection and approval of piping and sub-surface by the Contracting Officer. Foundation trenches shall be level and free of loose material. Trenches shall be inspected and approved by the Contracting Officer prior to placing of any concrete foundations. See paragraph 5 for structural characteristics of concrete and reinforcing steel for foundations and slabs.

4.5 MASONRY

Storage of masonry materials shall be in a dry place or materials shall be covered with a plastic protective layer. Cover open walls each day to keep them protected and dry. Concrete masonry units (CMU) shall be 200mm wide x 400mm x 200mm high as shown on drawings. They shall be installed in running bond level and plumb. Mortar joints shall be 9mm on all sides between CMU. Joints shall be struck with a concave tool to provide a smooth recessed curved surface. Install only quality units. The surface shall be free of chips, cracks, or other imperfections that would detract from the overall appearance of the finished wall. Defective CMU or mortar shall be rejected. CMU shall conform to ASTM C 90. For other requirements, see paragraph 5 “Structural.”

4.6 METAL

4.6.1 Metal Window Sills

Galvanized metal window sills, 1mm (20 gauge) shall be installed on the exterior of all windows. The metal window sills shall have a turn down of 5cm over the exterior masonry and stucco. Metal sills shall extend from side to side of the masonry opening in a single piece. Extend the metal window sill a minimum of 2 cm under the bottom of the metal window frame. Install masonry mortar as required for a smooth surface under the window sills. Sills shall slope a minimum of 6mm to the exterior and not allow water to puddle. Sealants shall be applied between joints of two (2) different materials.

4.6.2 Steel Cook Top

Provide steel cook top in kitchens minimum thickness of 1cm. Provide circular cut outs. Consult with the Contracting Officer for the diameter of circular cutouts. Provide steel infill plates for all cut out openings. Cook top can be made of several pieces for ease of handling. Adjacent plates shall be tight fitting to each other. The Contractor shall submit detailed shop drawings for review and approval prior to fabrication and installation.

4.6.3 Pass-Through Counter Top

Provide 1.6mm (16 gauge) stainless steel, or 4cm marble, pass through counter tops at openings between the kitchen and dining area. Edges shall be turned down 3 cm and corners shall be welded and ground smooth. Provide anchor angles welded to the bottom of the counters to anchor tops to masonry walls
below. Provide eight (8) anchors on the Serving Counter, four (4) on each side of the wall. Anchor angles to wall with masonry expansion sleeves and stainless steel screws. Counter tops are to be 60cm wide x length of opening shown.

4.6.4 Mirror Frames

Frames for plate glass mirrors larger than 450 by 750 mm shall be fabricated from extruded aluminum with anodized finish. Frames shall be provided with concealed fittings and tamperproof mountings.

4.6.5 Trench Covers and Frames

Trench covers shall be designed to meet the indicated load requirements. Trench frames and anchors shall be all welded steel construction designed to match cover. Covers shall have flush drop handles formed of 6 mm round stock, and shall be steel floor plate. Grating opening widths shall not exceed 25 mm.

4.7 CARPENTRY

4.7.1 Metal Roof Wood Framing

Submit calculations and drawings for wood framing for metal sloping roof. See drawing details for roofing configuration. Typical roof slope shall be 1 in 10.

4.7.2 Wood Purlins

If Contractor chooses to utilize wood purlins, provide and install roof purlins of natural wood, locally available material 1 meter on center securely wedged between steel H structural joists. Tightly fit 30 mm boards over roof structure and nail into wood purlins. New roofing shall extend a minimum of 300 mm past the exterior surface of the wall.

4.7.3 Data Required

Submit calculations and drawings for all proposed structural members.

4.7.4 Natural Decay- and Insect-Resistant Wood

Natural decay-resistant and insect-resistant wood can be an alternative to treated wood.

4.7.5 Structural Lumber

Except where a specific grade is indicated or specified, any of the species and grades shall have allowable unit stresses in kPa per code requirements. Use for joists, rafters, headers, trusses, beams, columns, posts, stair stringers, girders, and all other members shall be stress rated. Design of members and fastenings shall conform to AITC OT-01.

4.7.6 Framing Lumber and Board Lumber

Framing lumber such as studs, plates, caps, collar beams, cant strips, bucks, sleepers, nailing strips, and nailers, and board lumber such as subflooring and wall and roof sheathing shall be the species and grades per WWPA G-5.

4.7.7 Hardware

Unless otherwise indicated or specified, rough hardware shall be of the type and size necessary for the project requirements. Sizes, types, and spacing of fastenings of manufactured building materials shall be as recommended by the product manufacturer unless otherwise indicated or specified. Hardware exposed to the weather or embedded in or in contact with preservative treated wood, exterior masonry, or concrete walls or slabs shall be zinc-coated.

4.7.7.1 Bolts, Nuts, Studs, and Rivets

ANSI B18.2.1, ANSI B18.5.2.1M, ASME B18.5.2.2M, ASME B18.2.2, and ASTM A 687.

4.7.7.2 Anchor Bolts

ASTM A 307, size as indicated, complete with nuts and washers.

4.7.7.3 Lag Screws and Lag Bolts

ANSI B18.2.1.

4.7.7.4 Nails

Nails shall be the size and type best suited for the purpose and shall conform to ASTM F 547. Nails shall be hot-dip galvanized or aluminum when used on exterior work.

4.7.8 Trim, Finish, and Frames

Provide species and grades listed for materials to be paint finished. Provide materials that are to be stain, natural, or transparent finished one grade higher than that listed. Provide species indicated for materials to be transparent finished.

4.7.9 Steel Ladder

Shop drawings shall be submitted for the ladder to the guard towers as shown. The Contractor shall design all steel framing.

4.8 ROOFING AND WEATHERPROOFING

4.8.1 Sloped Roofs

On sloping roofs provide and install .70mm (24 gauge) galvanized steel in either corrugated or standing seam design. Metal roofing shall be anchored to wood deck sub-surface using exposed fasteners at 30cm on center at all seams and at 60cm on center in the panel field. Fasteners shall be placed at the top of the corrugation taking care not to dent panel. Roof sealant or adhesive shall be placed over each anchor head. Roofing system shall include all edge, ridge and penetration flashings necessary for a watertight installation. Roofing shall be galvanized mil finish. Panels shall be overlapped two corrugations side to side and be continuous sheets from ridge to eave. Provide continuous ridge vents on all gable roofs.

4.8.2 Not Used

4.8.3 Sheet Metal

4.8.3.1 Materials

Any metal listed by ASTM, DIN, BS or EN standards. Manual for a particular item may be used, unless otherwise specified or indicated. Materials shall conform to the requirements specified below and to the thicknesses and configurations established in ASTM, DIN, BS or EN standards. Standards other than those mentioned may be accepted provided they meet the minimum requirements, and the Contractor shall submit written proof of equivalency for approval. Written proof shall constitute a copy of the alternative standard and an analysis of equivalency.

4.8.3.2 Steel Sheet, Zinc-Coated (Galvanized)

Zinc coated steel conforming to ASTM A 525, DIN BS or EN Standards.

4.8.3.3 Aluminum Wall Capping

Aluminum wall capping conforming to ASTM B 209 M, DIN 18339, BS or EN Standards.

4.8.3.4 Scuppers, Gutters and Downspouts

Galvanized scuppers, gutters and downspouts shall be installed as indicated. Gutters and downspouts shall be rigidly attached to the building. Supports shall be spaced according to manufacturer's recommendations. Gutters and downspouts shall be designed and fabricated on site. Unless otherwise specified or indicated, exposed edges shall be folded back to form a 13 mm (1/2 inch) hem on the concealed side, and bottom edges of exposed vertical surfaces shall be angled to form drips.

4.8.3.5 Wall, Floor, and Ceiling Control Joints Over Plaster and Stucco

Control joints shall be provided as specified in ASTM, DIN, BS or EN Standards.

4.8.3.6 Connections and Jointing

4.8.3.6.1 Soldering

Soldering shall apply to copper and stainless steel items. Edges of sheet metal shall be pre-tinned before soldering is begun. Soldering shall be done slowly with well heated soldering irons so as to thoroughly heat the seams and completely sweat the solder through the full width of the seam. Edges of stainless steel to be pre-tinned shall be treated with soldering acid flux. Soldering shall follow immediately after application of the flux. Upon completion of soldering, the acid flux residue shall be thoroughly cleaned from the sheet metal with a water solution of washing soda and rinsed with clean water.

4.8.3.6.2 Seaming

Flat-lock and soldered-lap seams shall finish not less than 25 mm. wide. Unsoldered plain-lap seams shall lap not less than 75 mm. unless otherwise specified. Flat seams shall be made in the direction of the flow.

4.8.3.7 Cleats

A continuous cleat shall be provided where indicated or specified to secure loose edges of the sheet metalwork. Butt joints of cleats shall be spaced approximately 3 mm. apart. The cleat shall be fastened to supporting wood construction with nails evenly spaced not over 300 mm. on centers. Where the fastening is to be made to concrete or masonry, screws shall be used and shall be driven in expansion shields set in concrete or masonry.

4.8.3.8 Lintel Flashing

Lintel flashing shall extend the full length of lintel. Flashing shall extend through the wall one masonry course above the lintels and shall be bent down over the vertical leg of the outer steel lintel angle not less than 50 mm, or shall be applied over top of masonry and pre-cast concrete lintels. Bed joints of lintels at joints shall be under laid with sheet metal bond breaker.

4.8.3.9 Sill Flashing

Sill flashing shall extend the full width of the sill and not less than 100 mm beyond ends of sill except at joint where the flashing shall be terminated at the end of the sill.

4.8.3.10 Wall Capping

Wall Capping shall be installed according to the manufacturer's recommendations.

4.8.4 Sealants

4.8.4.1 Interior Sealant

ASTM C 834 or ASTM C 920, Type S or M, Grade NS, Class 12.5, Use NT, DIN, BS, or EN equal standards.

4.8.4.2 Exterior Sealant

For joints in vertical and horizontal surfaces, provide ASTM C 920, Type S or M, Grade NS, DIN, BS, or EN equal standards.

4.8.4.3 Floor Joint Sealant

(ASTM C 920) Type S or M, Grade P, class 25, use T

4.8.4.4 Primers

Provide a non-staining, quick-drying type and consistency recommended by the sealant manufacturer for the particular application.

4.8.4.5 Bond Breakers

Provide the type and consistency recommended by the sealant manufacturer to prevent adhesion of the sealant to backing or to bottom of the joint.

4.8.4.6 Backstops

Backing shall be 25 to 33 percent oversize for closed cell and 40 to 50 percent oversize for open cell material, unless otherwise indicated.

4.8.4.7 Cleaning Solvents

Provide type(s) recommended by the sealant manufacturer except for aluminum and bronze surfaces that will be in contact with sealant.

4.8.4.8 Surface Preparation

Surfaces shall be clean, dry to the touch, and free from dirt frost, moisture, grease, oil, wax, lacquer, paint, or other foreign matter that would tend to destroy or impair adhesion. Oil and grease shall be removed with solvent and surfaces shall be wiped dry with clean cloths. When resealing an existing joint, remove existing calk or sealant prior to applying new sealant. For surface types not listed below, the sealant manufacturer shall be contacted for specific recommendations.

4.8.4.9 Masking Tape

Masking tape shall be placed on the finish surface on one or both sides of a joint cavity to protect adjacent finish surfaces from primer or sealant smears. Masking tape shall be removed within 10 minutes after joint has been filled and tooled.

4.8.4.10 Backstops

Install backstops dry and free of tears or holes. Tightly pack the back or bottom of joint cavities with backstop material to provide a joint of the depth specified.

4.8.4.11 Primer

Immediately prior to application of the sealant, clean out loose particles from joints. Where recommended by sealant manufacturer, apply primer to joints in concrete masonry units, wood, and other porous surfaces in accordance with sealant manufacturer's instructions. Do not apply primer to exposed finish surfaces.

4.8.4.12 Bond Breaker

Provide bond breakers to the back or bottom of joint cavities, as recommended by the sealant manufacturer for each type of joint and sealant used, to prevent sealant from adhering to these surfaces. Carefully apply the bond breaker to avoid contamination of adjoining surfaces or breaking bond with surfaces other than those covered by the bond breaker.

4.8.4.13 Sealants

Provide a sealant compatible with the material(s) to which it is applied. Do not use a sealant that has exceeded shelf life or has jelled and can not be discharged in a continuous flow from the gun. Apply the sealant in accordance with the manufacturer's instructions with a gun having a nozzle that fits the joint width. Force sealant into joints to fill the joints solidly without air pockets. Tool sealant after application to ensure adhesion. Sealant shall be uniformly smooth and free of wrinkles. Upon completion of sealant application, roughen partially filled or unfilled joints, apply sealant, and tool smooth as specified. Sealer shall be applied over the sealant when and as specified by the sealant manufacturer.

4.8.4.14 Protection

Protect areas adjacent to joints from sealant smears. Masking tape may be used for this purpose if removed 5 to 10 minutes after the joint is filled.

4.8.4.15 Final Cleaning

Upon completion of sealant application, remove remaining smears and stains and leave the work in a clean and neat condition.

a. Masonry and Other Porous Surfaces: Immediately scrape off fresh sealant that has been smeared on masonry and rub clean with a solvent as recommended by the sealant manufacturer. Allow excess sealant to cure for 24 hour then remove by wire brushing or sanding.

b. Metal and Other Non-Porous Surfaces: Remove excess sealant with a solvent-moistened cloth.

4.9 WINDOWS, DOORS & GLAZING

4.9.1 Windows

4.9.1.1 Materials

A. Aluminum Extrusions: Provide alloy and temper recommended by the window manufacturer for the strength, corrosion resistance, and application of required finish, meeting the DIN 1725 raw material requirements, but not less than 215 N/mm2 ultimate tensile strength and not less than 1.5 mm thick at any location for main frame and sash members.

B. Fasteners: Provide aluminum, nonmagnetic stainless steel, epoxy adhesive, or other materials warranted by the manufacturer to be non-corrosive and compatible with aluminum window members, trim, hardware, anchors, and other components of window units.

1. Reinforcement: Where fasteners screw-anchor into aluminum less than 0.125 inch thick, reinforce the interior with aluminum or nonmagnetic stainless steel to receive screw threads or provide standard non-corrosive pressed-in splined grommet nuts.

2. Exposed Fasteners: Except where unavoidable for application of hardware, do not use exposed fasteners. For application of hardware, use fasteners that match the finish of the member or hardware being fastened, as appropriate.

C. Anchors, Clips, and Window Accessories: Fabricate anchors, clips, and window accessories of aluminum, nonmagnetic stainless steel, or hot-dip zinc-coated steel or iron complying with the requirements of DIN 1748; provide sufficient strength to withstand design pressure indicated. As a minimum provide 3 anchors on each side of the frame.

D. Compression-Type Glazing Strips and Weatherstripping: Unless otherwise indicated, and at the manufacturer's option, provide compressible stripping for glazing and weatherstripping such as molded EPDM or neoprene gaskets.

E. Sealant: For sealants required within fabricated window units, provide type recommended by the manufacturer for joint size and movement. Sealant shall remain permanently elastic non-shrinking, and non-migrating. Comply with Sealants of these specifications for selection and installation of sealants.

F. Wire Fabric Insect Screen shall be permanently fixed to the exterior.

4.9.1.2 Hardware

Provide the manufacturer's standard hardware fabricated from aluminum, stainless steel, or other corrosion-resistant material compatible with aluminum and of sufficient strength to perform the function for which it is intended.

4.9.1.3 Fixed, Casement, Projected and Sliding Windows

Provide window units meeting UL 752, level 5, but no less than 16 mm laminated single glazed. This standard shall apply to all window units within guard shack, guard house, guard tower, and guard rooms in Headquarters Building.

4.9.1.4 Fabrication

Provide aluminum windows with factory finish in all buildings to fit the masonry openings. Window openings shall be provided with insect screening permanently fixed to the
exterior. Provide a locking device on the interior of each window. Provide anchors on each side of the frame into the adjoining masonry, 3 on each side. Provide weather stripping system for all exterior windows and doors.

4.9.1.5 Finishes

Apply baked enamel in compliance with paint manufacturer's specifications for cleaning, conversion coating, and painting.

Color: Selections by Contracting Officer

4.9.1.6 Inspection

Inspect openings before beginning installation. Verify that rough or masonry opening is correct and the sill plate is level. Masonry surfaces shall be visibly dry and free of excess mortar, sand, and other construction debris.

4.9.1.7 Installation

Comply with manufacturer's specifications and recommendations for installation of window units, hardware, operators, and other components of the work. Set window units plumb, level, and true to line, without warp or rack of frames or sash. Provide proper support and anchor securely in place. Set sill members and other members in a bed of compound or with joint fillers or

gaskets, as shown, to provide weathertight construction. Refer to the Sealant sections for compounds, fillers, and gaskets to be installed concurrently with window units. Coordinate installation with wall flashings and other components of the work.

4.9.1.8 Adjusting

Adjust operating sash and hardware to provide a tight fit at contact points and at weatherstripping for smooth operation and a weathertight closure.

4.9.1.9 Cleaning

Clean aluminum surfaces promptly after installation of windows. Exercise care to avoid damage to protective coatings and finishes. Remove excess glazing and sealant compounds, dirt, and other substances. Lubricate hardware and other moving parts.

4.9.2 Doors

Generally, doors shall be hollow metal doors, sizes as shown on the drawings with hollow metal frames to match door masonry openings. All glazed doors shall have 6 mm tempered or laminated glass glazing in the upper half of the door. Heavy gauge metal exterior doors are required for higher security areas. Doors and frames within ballistic required areas shall meet UL 752, level 5. Commercial duty lock sets and hardware shall be used on all doors. Install required louvers, as called for in paragraph 6, in the lower portion of the door. Within ballistic rated door and frame units, louvers shall be rated to the same ballistic requirement as the door assembly. Provide 3 hinges on all doors. Provide door handles and locksets that can be locked with a key on all doors. Coordinate the final keying schedule with Contracting Officer prior to ordering lock sets. Generally each building should have 8 master keys fitting all locks, 8 sub-master keys fitting all exterior doors and 3 keys each for each interior door. Include 25% spare key blanks for the amount of keys provided per building. Provide numbering system identifying key to associated room door. All glazing in or adjacent to doors shall be tempered per IBC. Provide weather stripping system for all exterior doors. Submit shop drawings together with lock sets for approval. Door hardware sets shall be provided as follows:

HW-1
1-1/2 pr Hinges, A5111
1 ea Lockset, F04 Entry Lock w/levers, Grade 1, Exit Devices
1 ea Door Closer, C02061
1 ea Threshold, J32130

HW-2
3 pr Hinges, A5111
2 ea Exit Device, Conc Vert Rod, F04 w/Levers, Grade 1
2 ea Door Closers, C02061
1 ea Threshold, J32130
1 ea Removable Astragal

HW-3
1-1/2 pr Hinges, 8112
1 ea Latch Set, F01 w/Levers, Grade 1
1 ea Door Closer, C02061
3 ea Silencers

HW-4
1-1/2 pr Hinges, A8112
1 ea Lockset, F05

1 ea Stop, L02101 or L02161
3 ea Silencers

HW-5
1-1/2 pr Hinges, 8112
1 ea Door Pull, J405
1 ea Door Closer, C02051
1 ea Stop, L02101 or L02161
3 ea Silencers
1 ea Kick Plate, J102
1 ea Mop Plate, J103
1 ea Marble Threshold

HW-6
1-1/2 pr Hinges, 8112
1 ea Lockset, F07 Storeroom Lock
1 ea Stop, L02101 or L02161
3 ea Silencers

HW-7
1-1/2 pr Hinges, A8112
1 ea Lockset, F02
1 ea Stop, L02101 or L02161
3 ea Silencers
1 ea Marble Threshold

HW-8 Heavy Duty Steel Door
1-1/2 pr Hinges A8112
1 ea Heavy Duty Dead Bolt Lock

HW-9 Not Used

HW-10 Not Used

HW-11
1-1/2 pr Hinges A8112
1 ea Heavy Duty Dead Bolt Lock – see paragraph 4.9.2.1 for prison cell door

4.9.2.1 Steel Doors

SDI A250.8, except as specified otherwise. Prepare door to receive specified hardware. Exterior doors shall have top edge closed flush and sealed to prevent water intrusion. Doors shall be 44.5 mm thick, unless otherwise indicated. Doors shall be constructed using heavy gauge steel with minimum thickness of 1.2 mm.

4.9.2.1.1 Steel Doors (Armory)

Doors shall be constructed using heavy gauge steel with minimum thickness of 3 mm (11 gauge steel door) with a dead-bolt lock. The door shall have a heavy duty dead bolt lock. Door frames shall have minimum (4) anchors per jamb at least 10cm into structural reinforced wall. Door frame shall be grouted solid.

4.9.2.1.2 Steel Doors (Cell Doors)

Doors shall be constructed using heavy gauge steel with minimum thickness of 3 mm (11 gauge steel door) with a dead-bolt lock. The door shall have a pass-through slot for passing food trays with a hinged cover lockable from

the outside. Built into the bottom of the door shall be a 0.3m wide by 0.5m tall door for passing a bucket in and out with a hinged cover lockable from the outside. Door frames shall have minimum (4) anchors per jamb at least 10cm into structural reinforced wall. Door frame shall be grouted solid.

4.9.2.1.3 Standard Steel Frames

SDI A250.8, except as otherwise specified. Form frames to sizes and shapes indicated, with welded corners or knock-down field-assembled corners. Provide steel frames for doors, transoms, and mullions unless otherwise indicated.

4.9.2.1.4 Welded Frames

Continuously weld frame faces at corner joints. Mechanically interlock or continuously weld stops and rabbets. Grind welds smooth.

4.9.2.1.5 Not Used

4.9.2.1.6 Stops and Beads

Form stops and beads from 0.9 mm thick steel. Provide for other openings in standard steel frames. Secure beads to frames with oval-head, countersunk Phillips self-tapping sheet metal screws or concealed clips and fasteners. Space fasteners approximately 300 to 400 mm on centers. Miter molded shapes at corners. Butt or miter square or rectangular beads at corners.

4.9.2.1.7 Anchors

Provide anchors to secure the frame to adjoining construction. Provide steel anchors, zinc-coated or painted with rust-inhibitive paint, anchors not lighter than 1.2 mm thick.

4.9.2.1.7.1 Wall Anchors

Provide at least three anchors for each jamb. For frames which are more than 2285 mm in height, provide one additional anchor for each jamb for each additional 760 mm or fraction thereof.

a. Masonry: Provide anchors of corrugated or perforated steel straps or 5 mm diameter steel wire, adjustable or T-shaped;

b. Completed openings: Secure frames to previously placed concrete or masonry with expansion bolts

4.9.2.1.7.2 Floor Anchors

Provide floor anchors drilled for 10 mm anchor bolts at bottom of each jamb member. Where floor fill occurs, terminate bottom of frames at the indicated finished floor levels and support by adjustable extension clips resting on and anchored to the structural slabs.

4.9.2.1.8 Hardware Preparation

Provide minimum hardware reinforcing gages as specified in ANSI A250.6. Drill and tap doors and frames to receive finish hardware. Prepare doors and frames for hardware in accordance with the applicable requirements of SDI A250.8 and ANSI A250.6. For additional requirements refer to BHMA A115. Drill and tap for surface-applied hardware at the project site. Build additional reinforcing for surface-applied hardware into the door. Locate hardware in accordance with the requirements of SDI A250.8, as applicable. Punch door frames, with the exception of frames that will have weatherstripping or lightproof or soundproof gasketing, to receive a minimum of two rubber

or vinyl door silencers on lock side of single doors and one silencer for each leaf at heads of double doors. Set lock strikes out to provide clearance for silencers.

4.9.2.1.9 Finishes

All surfaces of doors and frames shall be thoroughly cleaned, chemically treated and factory primed with a rust inhibiting coating as specified in SDI A250.8, or paintable A25 galvannealed steel without primer. Where coating is removed by welding, apply touchup of factory primer.

4.9.2.1.10 Fabrication and Workmanship

Finished doors and frames shall be strong and rigid, neat in appearance, and free from defects, waves, scratches, cuts, dents, ridges, holes, warp, and buckle. Molded members shall be clean cut, straight, and true, with joints coped or mitered, well formed, and in true alignment. Dress exposed welded and soldered joints smooth. Design door frame sections for use with the wall construction indicated. Corner joints shall be well formed and in true alignment. Conceal fastenings where practicable. On wraparound frames for masonry partitions, provide a throat opening 3 mm larger than the actual masonry thickness. Design other frames in exposed masonry walls or partitions to allow sufficient space between the inside back of trim and masonry to receive calking compound.

4.9.2.1.10.1 Grouted Frames

For frames to be installed and to be filled with mortar or grout, fill the stops with strips of rigid insulation to keep the grout out of the stops and to facilitate installation of stop-applied head and jamb seals.

4.9.2.1.11 Installation

4.9.2.1.11.1 Frames

Set frames in accordance with SDI 105. Plumb, align, and brace securely until permanent anchors are set. Anchor bottoms of frames with expansion bolts or powder-actuated fasteners. Build in or secure wall anchors to adjoining construction. Backfill frames with mortar. When an additive is provided in the mortar, coat inside of frames with corrosion-inhibiting bituminous material.

4.9.2.1.11.2 Doors

Hang doors in accordance with clearances specified in SDI A250.8. After erection and glazing, clean and adjust hardware.

4.9.2.1.12 Protection and Cleaning

Protect doors and frames from damage. Repair damaged doors and frames prior to completion and acceptance of the project or replace with new, as directed. Wire brush rusted frames until rust is removed. Clean thoroughly. Apply an all-over coat of rust-inhibitive paint of the same type used for shop coat. Upon completion, clean exposed surfaces of doors and frames thoroughly. Remove mastic smears and other unsightly marks.

4.9.2.1.13 Weatherstripping

Provide weatherstripping that is a standard cataloged product of a manufacturer regularly engaged in the manufacture of this specialized item. Weather stripping shall be looped neoprene or vinyl held in an extruded non-ferrous metal housing. Air leakage of weather stripped doors shall not exceed 0.003125 cubic meter per second of air per square meter of door area when tested in accordance with ASTM E 283

4.9.2.1.14 Prefitting

At the Contractor's option, doors may be provided factory pre-fit. Doors shall be sized and machined at the factory by the door manufacturer in accordance with the standards under which they are produced. The work shall include sizing, beveled edges, mortising, and drilling for hardware and providing necessary beaded openings for glass and louvers. Provide the door manufacturer with the necessary hardware samples, and frame and hardware schedules as required to coordinate the work.

4.9.2.1.15 Finishes

Provide door finish colors as selected by the Contracting Officer from the color selection samples.

4.9.2.1.16 Installation

Before installation, seal top and bottom edges of doors with the approved water-resistant sealer. Seal cuts made on the job immediately after cutting using approved water-resistant sealer. Fit, trim, and hang doors with a 2 mm minimum, 3 mm maximum clearance at sides and top, and a 5 mm minimum, 6 mm maximum clearance over thresholds. Provide 10 mm minimum, 11 mm maximum clearance at bottom where no threshold occurs. Bevel edges of doors at the rate of 3 mm in 50 mm. Door warp shall not exceed 6 mm when measured in accordance with WDMA I.S. 1-A.

4.9.2.1.17 Weather stripping

Install doors in strict accordance with the manufacturer's printed instructions and details. Weather strip exterior swing-type doors at sills, heads and jambs to provide weather tight installation. Apply weather stripping at sills to bottom rails of doors and hold in place with a brass or bronze plate. Apply weather stripping to door frames at jambs and head. Shape weather stripping at sills to suit the threshold.

4.9.3 Glazing

ASTM C 1036, or ASTM C 1172 or equal. Acceptable manufacturer: Gürsan or equal

4.9.3.1 Tempered Glass

Tempered glass shall be kind FT fully tempered flat type. Class 1 clear, condition A uncoated surface, Quality q3-glazing select, conforming to ASTM, DIN, BS or EN standards. Color shall be clear.

4.9.3.2 Plastic Glazing (Acrylic Sheets)

ASTM D 4802, Type II, heat resistant, clear and smooth on both sides, ultraviolet stabilized, scratch resistant, 5 mm thick.

4.9.3.3 Glazing Accessories

4.9.3.3.1 Sealant

Sealant shall be elastomeric conforming to ASTM, DIN, BS, or EN standards. Type S or M, Grade NS, Class 12.5, Use G. Color of sealant shall be as selected from manufacturer’s full range of standard colors by Contracting Officer.

4.9.3.3.2 Glazing Gaskets

Glazing gaskets shall be extruded with continuous integral locking projection designed to engage into metal glass holding members to provide a watertight seal during dynamic loading, building movements and thermal movements. Glazing gaskets for a single glazed opening shall be continuous one-piece units with factory-fabricated injection-molded corners free of flashing and burrs. Glazing gaskets shall be in lengths or units recommended by manufacturer to ensure against pull-back at corners.

4.9.3.3.3 Fixed Glazing Gaskets

Fixed glazing gaskets shall be closed-cell (sponge) smooth extruded compression gaskets of cured elastomeric virgin neoprene compounds conforming to ASTM, DIN, BS. Or EN standarts.

4.9.3.3.4 Wedge Glazing Gaskets

Wedge glazing gaskets shall be high-quality extrusions of cured elastomeric virgin neoprene compounds, ozone resistant, conforming to ASTM, DIN, BS, or EN standards.

4.9.3.3.5 Putty and Glazing Compound

Glazing compound shall conform to ASTM, DIN, BS, or EN standards for face-glazing metal sash. Putty shall be linseed oil type conforming to DIN, BS, or EN standards for face-glazing primed wood sash. Putty and glazing compounds shall not be used with insulating glass or laminated glass.

4.9.3.3.6 Setting and Edge Blocking

Neoprene setting blocks shall be dense extruded type conforming to ASTM, DIN, BS, or EN standards. Silicone setting blocks shall be required when blocks are in contact with silicone sealant. Profiles, lengths and locations shall be as required and recommended in writing by glass manufacturer.

4.9.3.4 Preparation

Openings and framing systems scheduled to receive glass shall be examined for compliance with glass manufacturer's recommendations including size, squareness, offsets at corners, presence and function of weep system, face and edge clearance requirements and effective sealing between joints of glass-framing members. Detrimental materials shall be removed from glazing rabbet and glass surfaced and wiped dry with solvent. Glazing surfaces shall be dry and free of frost.

4.9.3.5 Installation

Glass and glazing work shall be performed in accordance with, glass manufacturer's instructions and warranty requirements. Glass shall be installed with factory labels intact and removed only when instructed. Edges and corners shall not be ground, nipped or cut after leaving factory. Springing, forcing or twisting of units during installation will not be permitted.

4.9.3.6 Cleaning

Upon completion of project, outside surfaces of glass shall be washed clean and the inside surfaces of glass shall be washed and polished in accordance with glass manufacturer's recommendations.

4.9.3.7 Protection

Glass work shall be protected immediately after installation. Glazed openings shall be identified with suitable warning tapes, cloth, or paper flags, attached with non-staining adhesives. Reflective glass shall be protected with a protective material to eliminate any contamination of the reflective coating. Protective material shall be placed far enough away from the coated glass to allow air to circulate to reduce heat buildup and moisture accumulation on the glass. Glass units which are broken, chipped, cracked, abraded, or otherwise damaged during construction activities shall be removed and replaced with new units.

4.10 FINISHES

Provide color boards with all materials for COR approval prior to ordering materials.

4.10.1 The exterior of all buildings shall be stucco. A temperature of between 4 and 27 degrees C shall exist for a period of not less than 48 hours prior to application of plaster and for a period of at least 48 hours after plaster has set. Control joints shall be designed for expansion and contraction of plaster work due to thermal exposure. Control joints shall comprise of back to back casing beads. Install new stucco in 2 coats. The first coat shall be a scratch coat approximately 1 cm thick. Allow 7 days to cure. The second coat shall be finish stucco, smooth finish, approximately 1 cm thick. Allow 7 days to cure before painting. Stucco showing oversanding, cracks, blisters, pits, checks, discoloration or other defects is not acceptable. Defective plaster work shall be removed and replaced with new plaster at the expense of the Contractor. Patching of defective work will be permitted only when approved by the Contracting Officer. Patching shall match existing work in texture and color. Paint shall be designated for exterior use, with less than .06% lead by weight. Stucco shall be painted with one coat of primer and two coats of finish paint, color to be selected by the Contracting Officer from the color board provided by the Contractor.

4.10.2 Interior walls shall be cement plaster applied in a similar manner as exterior stucco. Paint with 2 coats of semi-gloss off-white with less than .06% lead by weight color to be selected by the Contracting Officer from the color board provided by the Contractor.

4.10.3 Ceilings shall be plaster applied over cast-in-place concrete slabs or beams. Paint ceiling with 2 coats of flat white, with less than .06% lead by weight.

4.10.4 Not Used

4.10.5 Not Used

4.10.6 Exposed exterior steel trim, frames, doors and pipe railings: Paint with one coat water-based primer, with 2 coats of water-based paint, color to be selected by the Contracting Officer from the color board provided by the Contractor.

4.10.7 Not Used

4.10.8 Tile: Tile work shall not be performed unless the substrate and ambient temperature is at least 10 degrees C and rising. Temperature shall be maintained above 10 degrees C while the work is being performed and for at least 7 days after completion of work. Upon completion, tile surfaces shall be thoroughly cleaned in accordance with manufacturer's approved cleaning instructions. Acid shall not be used for cleaning glazed tile. Floor tile with resinous grout or with factory mixed grout shall be cleaned in accordance with instructions of the grout manufacturer. After the grout has set, tile wall surfaces shall be given a protective coat of a non-corrosive soap or other approved method of protection.

4.10.8.1 Floors in wet areas shall be ceramic tile. Joints shall be 2-3mm. Waterproof gray grout shall be applied the full depth of the tile. Floors shall slope, minimum 1/50, to floor drains. Slope shall be obtained with sloping mortar bed of minimum 2cm thickness. Provide continuous waterproofing membrane beneath sloping mortar bed, turn up wall 30cm behind wall base. Membrane shall be fully sealed at joints and shall shed water into body of floor drain. Color of tile shall be selected by the Contracting Officer from samples provided by the Contractor.

4.10.8.2 Floors in administration areas/living quarters, dining, and corridors shall be 30cm x 30cm terrazzo tile with thin set mortar. Joints shall be 2-3mm. Waterproof gray grout shall be applied the full depth of the tile. Color of tile shall be selected by the Contracting Officer from samples provided by the Contractor.

4.10.8.3 Walls in wet areas shall be tiled with 150mm x 150mm glazed ceramic tile up to 2.2 meters above the floor to include interior of toilet stalls, showers and behind sinks. Joints shall be 2-3mm. Waterproof gray grout shall be applied full depth of the tile. Grout shall cure for 72 hours and then be sealed with a commercial grout sealant in two coats. Color of tile shall be selected by the Contracting Officer from samples provided by the Contractor.

4.10.9 See Finish Schedule for finish types.

4.10.10 Kitchen shall be covered with quarry tile flooring. Walls in kitchen shall be ceramic tile up to 2.2 meters above finished floor. Floor in dining area shall be terrazzo tile.

4.11 SPECIALTIES

4.11.1 Mirrors

0.6m x 0.9m, 6mm plate glass, shall be mounted above all lavatories. Mount bottom of mirrors 1.1m above finished floor.

4.11.2 Toilet Paper Holders.

Toilet paper holders, stainless steel, shall be installed approximately 200 mm above floor in Eastern Toilets.

4.11.3 Shower Curtain Rods & Shower Curtain.

Shower curtain rods, stainless steel, heavy duty, 18 gauge shall be mounted between the screen walls of each shower stall. Mount rod at 2.0 m above finished floor. Provide a shower curtain with support rings for each shower stall.

4.11.4 Grab Bars

Stainless steel grab bars, heavy duty, 18 gauge, two each 900 mm and 1050 mm long, 40 mm diameter. shall be mounted behind and beside all eastern toilets, and bathtubs as occur.

4.11.5 Paper Towel Dispensers

Paper towel dispensers, 0.683 mm Type 304 stainless steel, surface mounted. Furnish tumbler key lock locking mechanism.

4.11.6 Light Duty Metal Shelf

Provide a 600 mm long, light duty stainless steel shelf and brackets over each lavatory.

4.11.7 Robe hooks on all toilet and shower stalls required.

4.11.8 Other toilet accessories shall be as shown on drawings.

4.12 STANDARDS

The Contractor should use the following American standards to provide sound structural design if local standards are not available, relevant, or applicable. The Contractor shall follow American Concrete Institute Standards for design and installation of all concrete structures.

Concrete	280.0 kg./sq.cm cylinder strength @ 28 days (ASTM-. C 31M)
Steel Reinforcement	4218.0 kg./sq.cm(Fy= 60.0 ksi),yield strength.
Welded Wire Fabric	ASTM A185
Anchor Bolts	ASTM A307 using A36 steel.
Concrete Masonry Units	ASTM C90, Type I (normal wt, moisture Cntrl).
Mortar	ASTM C270, Type S (Ultimate compressive strength of 130.0 kg/sq. cm.)
Proportion	1 part cement, 0-1/2 part lime and 4-1/2 parts aggregate
Grout	ASTM C476 (Slump between 200 mm to 250 and Compressive Strength 14 MPa (2000 psi) at 28 days.

Joint Reinforcement	Standard 9 gage minimum, Ladder Type
Structural Steel	ASTM A36: 2530.0 kg./sq.cm (Fy = 36,000psi)
Welding	AWS (American Welding Society) D1.1-2002.

5 STRUCTURAL

5.1 GENERAL

The project consists of various structures. The new buildings shall be constructed as shown on the drawings and stated in the specifications. However, the building foundations have been designed based on assumed geotechnical design parameters. These assume parameters are shown on the foundation plans and stated in Paragraph 5.8, FOUNDATIONS. The contractor shall perform a geotechnical investigation as required in paragraph 2.1 GEOTECHNICAL, FOUNDATIONS AND SURVEY, to verify that the foundations as designed will perform satisfactory. If the contractor determines the building foundations as designed will not function satisfactory, the contractor shall redesign the foundations accordingly. The contractor is responsible for the foundation design and construction of the foundations. Building foundations shall be founded a minimum of 800 mm below grade.

The contractor has the option to redesign the structural columns and beams if the structural engineer wants a variance on the structural design. Contractor must provide structural calculations, structural design , and structural analysis to the government for approval.

5.2 DESIGN

Foundation design shall be performed and design documents signed by a registered professional structural engineer. Calculations shall be in SI (metric) units of measurements. All components of the building shall be designed and constructed to support safely all loads without exceeding the allowable stress for the materials of construction in the structural members and connections.

5.3 DEAD AND LIVE LOADS

Dead loads consist of the weight of all materials of construction incorporated in the buildings. Live loads used for design shall be in accordance with the American Society of Civil Engineers, ASCE STANDARD, and Minimum Design Loads for Buildings and Other Structures, ASCE 7, edition as referenced herein.

5.4 WIND LOADS

Wind loads shall be calculated in accordance with ASCE 7 using a "3-second gust" wind speed of 125 km/hr. All facilities shall be classified as a minimum of Category II in accordance with Table 1-1 in ASCE 7, referenced herein.

5.5 SEISMIC

The building and all parts thereof shall be designed for the seismic requirements as defined by the International Building Code referenced herein. Site-specific data: Spectral ordinates SS=1.65g and S1=0.75g.

5.6 STRUCTURAL CONCRETE

Concrete structural elements shall be designed and constructed in accordance with the provisions of the American Concrete Institute, Building Code Requirements for Structural Concrete, ACI 318, latest edition. A minimum cylinder compressive strength of 4000 psi (28 mPa) shall be used for design and construction of all concrete. Reinforcing steel shall be deformed bars conforming to American Society for Testing and Materials (ASTM) publication ASTM a 615, Deformed and Plain Billet-Steel Bars for Concrete Reinforcement. Concrete at or below grade shall have maximum water-cement ration of 0.40. No concrete shall be placed when the ambient air temperature exceeds 32 degrees C (90 degrees F) unless an appropriate chemical retardant is used. In all cases when

concrete is placed at 32 degrees C (90 degrees F) or hotter it shall be covered and kept continuously wet for a minimum of 48 hours. Concrete members at or below grade shall have a minimum concrete cover over reinforcement of 3” (75 millimeters).

5.7 MASONRY

Masonry shall be designed and constructed in accordance with the provisions of Building Code Requirements for Masonry Structures, ACI 530/ASCE 5/TMS 402, latest editions. Mortar shall be Type S and conform to ASTM C 270, latest edition. Masonry shall not be used below grade, unless for fully reinforced and grouted foundation stem walls. All cells of exterior CMU walls shall be fully grouted and reinforced.

5.8 FOUNDATIONS

The foundations shall be constructed by using reinforced concrete materials. The foundations system for the two-story building shall be spread footings for individual column footings and grade beams as shown on the drawings. Minimum length and width of spread footings shall be as shown on the drawings. A bearing capacity of 0.75 kg/sq. cm was assumed and used in designing the building foundations. The allowable bearing pressure shall be determined by the Contractor after performing his geotechnical investigation. The maximum allowable settlement between footings shall be less than 2.5 cm. It is the contractors’ responsible to perform a geotechnical investigation and determine if the foundations as shown and designed will perform satisfactory, see paragraph 2.1 GEOTECHNICAL, FOUNDATIONS AND SURVEY. If the contractor determines the foundations as designed will not perform satisfactory, the contractor shall redesign the foundations accordingly.

6 NOT USED

7 MECHANICAL

7.1 GENERAL

Heating and cooling shall be provided by the use of split system heat pumps, liquid propane (LP) gas heaters, multi-speed ceiling and wall oscillating fans, ceiling or wall exhaust fans or electric unit heaters as indicated on the drawings. Gas heaters shall be vented type and installed in accordance with local standards, complete with direct and conventional flue vents or stacks to ventilate combustion gases to the outside environment.

7.2 SPECIALIST SUB-CONTRACTORS QUALIFICATIONS

The heating/ventilation work shall be executed by an air-conditioning specialist sub-contractor experienced in the construction of these types of systems.

7.3 CODES, STANDARDS AND REGULATIONS

The equipment, materials and works covered under the heating, ventilation and air-conditioning services shall conform to the referenced standards, codes and regulations where applicable except where otherwise mentioned under each particular clause.

7.4 DESIGN CONDITIONS

Air-conditioning in the selected offices and bedrooms to maintain 23.8ºC (75ºF) in summer at 50% RH and 21.1ºC (70ºF) in winter.

Heating using gas or wood stoves in other areas to maintain 21.1ºC (70ºF) indoor temperature in winter

Noise levels inside occupied spaces generated by HVAC systems shall not exceed NC 35.

7.4.1 THERMAL PERFORMANCE

Assemblies shall meet the requirements of TI-800, Design Criteria, UFC 3-400-01 Design: Energy Conservation, and ASHRAE Standard 90.1, latest editions, but shall meet the following minimum requirements:

Assembly	Minimum Thermal Value
exterior walls (above grade)	RSI 2.288 (R 13)
ceilings/roof	RSI 6.688(R 38)
basement wall	RSI
floor (over unheated space)	RSI 5.28 (R 30)
exterior doors	RSI 0.25 (R 1.43)
exterior windows/ (glazing within doors)	RSI 0.308(R 1.75)

7.5 VENTILATION AND EXHAUST SYSTEMS

All fans shall be used for building ventilation and pressurization with capacities to be selected for minimum noise level generated. Unit mounted fans either used for supply or exhaust shall be centrifugal forward curved, backward inclined, or airfoil fans with non-overloading characteristics of high efficiency and quiet running design. The fans shall be of the heavy-duty type with durable construction and proved performance in a desert environment. Each exhaust fan shall be provided with shut-off dampers which close automatically when the fan is not running. Also, each fan shall be complete with vibration isolator, external lubricators where bearings require routine lubrication, and all accessories and sound attenuators as necessary.

Kitchen shall be provided with exhaust hood located over major heat producing equipment. System design and installation shall be in accordance with the requirements of NFPA 96 and the recommendations of the 1999 ASHRAE Applications handbook. Each hood shall exhaust air to the outside of the facility and contain grease (washable) filters.

7.5.1 Duct & Piping Insulation.

All intake and exhaust ductwork as required and refrigerant piping, shall be provided insulation and vapor barrier for thermal efficiency, to prevent condensation, and for energy conservation. Insulation exposed to weather or physical damage shall be protected with aluminum jacketing.

7.5.2 Submittals

The Contractor shall submit the following for the equipment to be provided under this section of the specification: manufacturer’s data including performance characteristics at design conditions; catalog cuts showing dimensions, performance data, electrical requirements, compliance with standards as stated in paragraph CODES, STANDARDS AND REGULATIONS; drawings indicating location and installation details.

7.6 ELECTRIC RESISTANCE SPACE HEATERS

7.6.1 Unit Heater

Provide a self-contained electric heating unit, suspended from ceiling or structure, with fan and heating elements. Provide control-circuit terminals and single source of power supply with disconnect. Heating wire element shall be nickel chromium. Include limit controls for overheat protection of heaters. Provide tamper resistant integral thermostat.

7.6.2 Cabinet Heater

Provide a self-contained electric heating unit, surface mounted in wall or structure, with fan and heating elements. Provide control-circuit terminals and single source of power supply with disconnect. Heating wire element shall be nickel chromium. Include limit controls for overheat protection of heaters. Provide tamper resistant integral thermostat.

7.6.3 Submittals

The Contractor shall submit the following for the equipment to be provided under this section of the specification: manufacturer's data including performance characteristics at design conditions; catalog cuts showing dimensions, performance data, electrical requirements, compliance with standards as stated in paragraph CODES, STANDARDS AND REGULATIONS; drawings indicating location and installation details.

7.7 CEILING AND WALL FANS

7.7.1 Ceiling Fan

Provide 1320mm blade ceiling fans at one per 40 square meters of floor space. Fans shall have reversible motors. Center or distribute evenly in room. Coordinate placement with the lighting plan to prevent conflict or casting shadows. Fan mount shall be flush, standard, or angle mount depending on ceiling height. Fan shall be mounted such that the fan blade is approximately 2.4 meters above the finished floor. The fan shall be provided with out light kit. The finish shall be factory painted white. The controls shall be from either a single pole switch or from two 3 way switches to provide on/off operation. The electrical supply shall be 220volts, single phase, and 50 hertz. Install per manufacturers' instructions.

7.7.2 Oscillating Wall Fans

Provide 460mm diameter wall fans as shown on plans. Coordinate placement with the lighting plan to prevent conflict or casting shadows. Fan mount shall be painted steel wall bracket and mounted such that the fan blade is approximately 2.1 meters above the finished floor. The finish shall be factory painted white. The controls shall be from either a single pole switch or from two 3 way switches to provide on/off operation. The electrical supply shall be 220volts, single phase, and 50 hertz. Install per manufacturers' instructions.

7.7.3 Submittals

The Contractor shall submit the following for the equipment to be provided under this section of the specification: manufacturer's data including performance characteristics at design conditions; catalog cuts showing dimensions, performance data, electrical requirements, compliance with standards as stated in paragraph CODES, STANDARDS AND REGULATIONS; drawings indicating location and installation details.

7.8 SPLIT SYSTEM HEAT PUMPS

7.8.1 Split System Heat Pumps

Unit shall be a split type, factory made assembly, consisting of an indoor section and an outdoor section, designed to work together to provide year round heating and cooling, air-circulating, ventilating, air-cleaning, and dehumidifying functions. The separate sections shall be standard commercial products of the same manufacturer, and shall have ratings based on their being used as matched assemblies.
Minimum Coefficient of Performance (COP) shall be 2.9. Minimum Seasonal Energy Efficiency Ratio (SEER) shall be 10. Refrigerant shall be non-CFC.

7.8.1.1 Indoor Section

Indoor section shall be a factory assembled unit consisting of indoor coil, centrifugal blower, motor, motor controls, filters, electric resistance heaters, enclosure, and condensate pan, with controls, relief devices, piping, wiring, controls and accessories required for operation. Outlet grille shall be constructed to permit adjustable directional air

flow. Unit shall be wall mounted console type construction. The sound level rating shall be less than 45 decibels (dB).

7.8.1.2 Outdoor Section

Outdoor section shall be a factory assembled unit consisting of outdoor coil, propeller type fans arranged for horizontal discharge, refrigerant circuit with filter-dryer, and hermetically sealed compressor with crankcase heater, internal overload protection and pressure relief valve, all contained in a weather resistant outer casing. Defrost controls, and necessary tubing, piping, controls, control circuits, and required accessories shall be provided. System shall be factory pre-charged with oil and refrigerant. Air inlet and discharge grilles with bird screens shall be provided. The sound level rating shall be less than 60 dB. The unit shall be mounted on a fabricated metal stand a minimum of 300mm on a concrete pad at grade.

7.8.2 Electrical Requirements

Each section shall be equipped with a main power panel and shall include complete branch circuit protection for every electrical component. Main power panel shall completely protect the unit from primary single phasing and over current. Fuses and protective devices shall be provided by the manufacturer and installed at the factory. All components of the main power panel and all control devices shall be UL listed. Wiring shall be in accordance with UL and NFPA 70 requirements. Equipment shall operate on 220 volt, single phase, 50 hertz electrical service.

7.8.3 Controls

A switch with fan/off/cool positions shall be mounted in the unit or with the remote thermostat. Thermostat shall be remotely mounted where shown on the drawing.

Building wall penetrations shall be carefully made so as not to deteriorate the structural integrity of the wall system. The Contractor shall consult with the building manufacturer, if possible, to determine the best way to penetrate the wall. If the building manufacturer is not available, a structural engineer shall be consulted. In either case, the recommendations of the engineer shall be strictly adhered to.

7.8.4 Submittals

The Contractor shall submit the following for the equipment to be provided under this section of the specification: manufacturer's data including performance characteristics at design conditions; catalog cuts showing dimensions, performance data, electrical requirements, compliance with standards as stated in paragraph CODES, STANDARDS AND REGULATIONS; drawings indicating location and installation details.

7.9 Space Heating

Refer to Spec section 01010, Paragraph 2.10 for using propane gas as the preferred fuel for space heating and cooking as indicated on the plans. For the Compound sites where there is no commercial availability of propane gas, the Contractor shall consider use of wood stove for cooking and space heating only after approval by the Contracting Officer.

7.9.1 Wood Stove (*only in area where propane can not be found*)

Provide Cast Iron stoves, minimum cast iron wall thickness shall be 5mm. Install with adequate clearances per manufactures installation guide. Route the chimney runs inside the building envelope (inside the heated space) so air and flue gases stay at least as warm as the air in the building until they are expelled outside. The chimney shall penetrate the highest part of the building envelope so the chimney functions better. The chimney shall rise at least 60 cm (24 inches) above the roof ridge and its top is clear of obstacles to wind flow so it can produce stable draft and it has a chimney (rain) cap because without one any chimney is vulnerable to adverse wind pressures. The chimney flue shall be insulated and be the correct size for the appliance so flue gases are kept warm and flow quickly through the system. The flue pipe, if used, shall run straight up from the appliance to the chimney and the chimney has no offsets because each change in direction presents resistance to flow. The appliance and venting system shall be

reasonably well-sealed to prevent leaks that introduce cool air and make the system more vulnerable to adverse pressures. The stove shall be certified for low smoke emissions or have equivalent characteristics so it is unlikely to smolder. The system shall be installed in a building that has a balanced ventilation system. There shall be no exhaust fan in the stove exhaust.

7.9.2 PROPANE HEATER SPACE HEATING

Provide vented propane heaters at the locations indicated. Install with adequate clearances per manufactures installation guide. Provide isolation valve and drip leg at each heater connection point. The appliance shall be designed for vented indoor installation and be provided with either a standing pilot or electronic ignition system. The system shall be installed in a building that has a ventilation system to introduce. Combustion air route vents through nearest wall or roof as coordinated with the Resident Engineer.

7.9.3 Submittals.

The Contractor shall submit the following for the equipment to be provided under this section of the specification: manufacturer's data including performance characteristics at design conditions; catalog cuts showing dimensions, performance data; drawings indicating location and installation details.

7.10.A Propane Stove Cooking

Cooking area shall be provided canopy type exhaust only kitchen hoods and associated exhaust fans. These exhaust hoods shall include baffle type aluminum filters to trap grease/oil. The exhaust fan sizing calculations should recognize the use of propane stoves in the kitchen. Sizing should accommodate all propane burning stoves running simultaneously. Additionally, the placement of the exhaust hood should allow enough clearance for an average sized male to stand on top of the stove platform unobstructed, for standing on the stove is common local cooking practice. The higher than average placement of the hood will require the extension of the lip of the hood out further than normal, in order to catch the majority of the smoke and adequately vent the area.

Make-up air for kitchen hood exhaust shall be pulled in from roof mounted intake hood with permanent washable air filter and from adjoining Kitchen/Dining areas.

7.10.B Wood Stove Cooking

Route the chimney runs inside the building envelope (inside the heated space) so air and flue gases stay at least as warm as the air in the building until they are expelled outside. The Contractor shall protect chimney by means of metal rails or masonry wall from damage from large pots during cooking. The chimney shall penetrate the highest part of the building envelope so the chimney functions better. The chimney shall rise at least 60 cm (24 inches) above the roof ridge and its top is clear of obstacles to wind flow so it can produce stable draft and it has a chimney (rain) cap because without one, any chimney is vulnerable to adverse wind pressures. The chimney flue shall be insulated and be the correct size for the appliance so flue gases are kept warm and flow quickly through the system. The flue pipe, if used, shall run straight up from the appliance to the chimney and the chimney has no offsets because each change in direction presents resistance to flow. The appliance and venting system shall be reasonably well-sealed to prevent leaks that introduce cool air and make the system more vulnerable to adverse pressures. The system shall be installed in a building that has a balanced ventilation system. There shall be no exhaust fan in the stove exhaust. The Wood stove kitchen shall be well vented with louvers located high at walls on the building ends.

7.11 TESTS ON COMPLETION

After completion of the work, the Contractor shall demonstrate to the Contracting Officer that the installation is adjusted and regulated correctly to fulfill the function for which it is intended. The Contractor shall test, adjust, balance and regulate the section or sections of concern as necessary until the required conditions are obtained. Include tests for all interlocks, safety cutouts and other protective device to ensure correct functioning. All such tests shall be carried out and full records of the values obtained shall be prepared along with the final settings and submitted to the Contracting Officer in writing.

8 PLUMBING

8.1 SYSTEM REQUIREMENTS

Domestic water and waste systems shall be provided to each area with fixtures requiring water and/or waste connections such as toilets, etc. The entire water system shall include cold water to each fixture as well as to a water heater. Hot water shall be distributed to all kitchen sinks, showers, etc. as indicated. The water distribution and waste systems shall be in complete accordance with the requirements of the International Plumbing Code (IPC, latest edition). The Contractor shall furnish, install and test the domestic water supply system as shown on the drawings. Each supply system shall comprise of a booster pump, booster tank and water heater. Mechanical equipment shall be housed inside an insulated enclosure designed for year around operation and suitably protected from weather elements. Contractor shall design and install a domestic water tank system that can be easily converted to a permanent system in the future. All water distribution system components exposed to the outdoors shall be provided with freeze protection to ensure water is available throughout the year.

8.2 PIPING MATERIALS

Domestic water shall be distributed by means of PVC (cold water only), CPVC (cold or hot water) or copper for the pressure to be utilized. PVC and CPVC shall not be used in areas where it will be exposed to outdoor sun.

8.2.1 Insulation

All domestic water pipe and fittings exposed and not inside an insulated wall shall be insulated. In addition, all water pipe that is exposed shall also be covered with metal jacketing. Water piping exposed to outdoor conditions shall be insulated and jacketed and provided with heat trace to prevent freezing.

8.3 FIXTURES

All plumbing fixtures shall be provided with p-traps and shall be vented to the roof per International Plumbing Code, latest edition. Plumbing fixtures within holding and/or detention cells shall be jail grade type with no exposed valves or plumbing lines.

8.3.1 Eastern Style Water Closet with Flush Tank

Provide acid resisting fired porcelain enameled cast iron water closet complete with rotating No-Hub 'P' trap and No-Hub coupling to meet piping requirements. Eastern Style water closet shall be furnished with integral non-skid foot pads and bowl wash down non-splashing flushing rim. The water closet shall be completely self supporting requiring no external mounting hardware and shall be flush with floor. The Eastern Style water closet shall incorporate waterproofing membrane flashing flange. Provide wall mounted faucet on the right hand side of the water closet stall as viewed from the in-use position. Toilets shall be oriented north and south. Toilets shall not face east or west.

8.3.2 Lavatories

All sinks shall be trough type constructed of block and concrete with ceramic tile exterior and lining capable of withstanding abuse. Faucets shall be chrome plated brass single lever mixing type. Provide maintenance access to waste piping and P-traps from under the sink. Lavatories inside the prison cells shall be temper-proof with integral spout, soap depression, and outlet connection to slip 40mm OD tubing.

8.3.3 Water Heater

Electric type water heaters shall conform to UL 174 with dual heating elements. Each element shall be 4.5 KW. The elements shall be wired so that only one element can operate at a time. Each water heater shall have controls with an adjustable range that includes 32 to 71 degrees C. Electrical wiring shall be installed per the NEC and the manufacturer’s instructions. Piping and fittings for hot, cold, drain, and pressure temp connections shall be installed per the manufacturer’s recommendations.

8.3.4 Plastic Shower Stalls

Provide one piece or four piece white solid acrylic pressure molded fiberglass reinforced plastic shower stalls. Shower stalls shall be scratch resistant, waterproof, and reinforced. Provide recessed type shower stalls approximately 914 mm wide, 914 mm front to rear, 1829 mm high, and 125 high mm high curb with shower stall bottom or feet firmly supported by a smooth level floor. Provide PVC shower floor drains and stainless steel strainers. Install shower stall in accordance with the manufacturer's written instructions. Provide smooth 100 percent silicone rubber white bathtub calk between the top, sides, and bottom of shower stalls and bathroom walls and floors.

8.3.5 Scullery Sink (Kitchen Area)

Provide 14 gauge, type 304, (18-8) stainless steel, sink with drain board. Compartments shall be large enough to wash posts 1 meter in diameter. Sink shall be supported on four stainless steel legs. Sink shall have pre-drilled in backsplash at manufacturer for commercial faucet. Commercial faucet shall be solid brass construction, chrome finish, wall mount 203mm center arc tube.

8.3.6 Floor Drain and Shower Drain

Floor drains and shower drains shall consist of a galvanized body, integral seepage pan, and adjustable perforated or slotted chromium-plated bronze, nickel-bronze, or nickel-brass strainer, consisting of grate and threaded collar. Floor drains shall be cast iron except where metallic waterproofing membrane is installed.

8.3.7 Trench Type Floor Drain

Trench type floor drains shall consist of a cast iron or galvanized body, integral seepage pan, and slotted chromium-plated bronze, nickel-bronze, or nickel-brass grate. Grate shall be 300 mm wide and 2000 mm long.

8.3.8 Floor Sink

Floor sink shall be circular or square, with 300mm overall width or diameter and 250 nominal overall depth. It shall have acid resistant enamel interior with cast iron body, aluminum sediment bucket and perforated grate of cast iron. Outlet size as indicated on plans.

8.3.9 Grease Interceptor

Steel construction, manual cleaning type with removable checker-plate cover; complete with flow control valve. Tested and rated in accordance with PDI G-101. Concrete shall have 21 MPa (3045 PSI) minimum compressive strength in 28 days.

8.3.9 Hose Bibb (HB)

Room hose bibs and building wall hydrants shall be provided as required. Hose bibs shall be provided at interior locations as follows and in other locations where required.

8.4 Not Used

8.5 Generator Fuel Storage

The work shall include the fabrication and installation of the entire fuel storage and distribution system. Tanks shall be skid mounted. Tanks of this type that have a capacity above 2640 L will be provided with a either a dike or a spill containment system. The dike or spill containment system should have enough capacity for the entire contents of the

tank plus 10 percent. Provide a molded neoprene isolation pad to isolate an aboveground tank from the concrete pad underneath. Steel tank supports specifically are prone to encounter premature rusting due to constant exposure to moisture and their incompatibility with concrete. Tank shall be designed and manufactured for horizontal installation. Tank shall be mounted on the tank manufacturer's standard support skid. Skid shall span the entire length of the tank and shall separate the tank from the reinforced concrete slab by a minimum of 200 mm. Indicate on the drawings the number and size of each tank man way required. Tanks of 3,780 to 45,430 L to capacity will be provided with 760 mm diameter man ways. Tanks larger than 45,430 L will be provided with 915 mm diameter man ways. Tanks 3,780 L and larger will be provided with a minimum of 1 tank man way to allow for internal tank access. Piping will not penetrate through access man ways. Tank shall be provided with a combination cleanout and gauge connection. Vent pipe sizing shall be not less than 32 mm nominal inside diameter. Vent shall be the rupture disc type calibrated to burst at 13.8 kPa pressure, and operate at 80 percent of burst setting. Tank shall be provided with an overfill alarm system. Tank shall be provided with 2 stick gauges graduated in m and mm. Stick gauge shall be of wood and treated after graduating to prevent swelling or damage from the fuel being stored. Each storage tank shall be provided with an automatic analog reading gauge which is directly mounted to a tank's man way cover. Provide an in-line centrifugal pump as par of the day tank package for fuel transfer from the bulk storage tanks to the day tank. Day tanks shall provide sufficient fuel for four hours of generator operation without refill. Provide cathodic protection for metal components. Storage tanks shall be handled with extreme care to prevent damage during placement and shall be installed in accordance with the manufacturer's installation instructions. Piping shall be inspected, tested, and approved before burying, covering, or concealing. Piping shall be installed straight and true to bear evenly on supports. Piping shall be free of traps, shall not be embedded in concrete pavement, and shall drain toward the corresponding storage tank. Any pipe, fittings, or appurtenances found defective after installation shall be replaced. Belowground nonmetallic pipe shall be installed in accordance with pipe manufacturer's instructions. Belowground piping shall be laid with a minimum pitch of 25 mm per 6 m.

External Fuel Fill Point: For each specific site, the Contractor shall coordinate with the Resident Engineer and provide a fuel unloading point outside of the perimeter wall to facilitate transfer of fuel from the commercial fuel tanker to the bulk fuel storage at the Power Plant. This transfer shall include interconnecting piping and valves between the fuel point and the two bulk fuel storage tanks.

8.5.1 Testing

A tightness test shall be performed on each aboveground storage tank. The tests shall be performed prior to making piping connections. Tests shall be capable of detecting a 0.1 mL/s leak rate from any portion of the tank while accounting for effects of thermal expansion or contraction. Each storage tank shall be pressurized with air to 35 kPa and monitored for a drop in pressure over a 2-hour period during which there shall be no drop in pressure in the tank greater than that allowed for pressure variations due to thermal effects. Following the tank tightness test, each storage tank shall be leak tested in accordance with the manufacturer's written test procedure if the manufacturer's test procedure is different from the tightness tests already performed. Each storage tank shall be filled with the proper fuel.

8.5.2 Submittals

The Contractor shall submit the following for the equipment to be provided under this section of the specification: Manufacturer's standard catalog data, Installation Manual Operation and Maintenance Manuals and test results.

Tests Results:

Six copies of each test containing the information described below in bound letter-size booklets. Individual reports shall be provided for the storage tank tests, the piping tests, the system performance tests, the high level alarm test, and the system leak tests. Drawings shall be folded blue lines, with the title block visible.

a. The date the tests were performed.

b. A list of equipment used, with calibration certifications.

c. A copy of measurements taken.

d. The parameters to be verified.

e. The condition specified for the parameter.

f. The inspection results, signed, dated, and certified by the installer. The certification shall state that required procedures were accomplished, that the procedures were conducted in compliance with the plans and specifications.

g. A description of adjustments performed.

8.6 Submittals.

The Contractor shall submit the following for the equipment to be provided under this section of the specification: manufacturer's data including performance characteristics at design conditions; catalog cuts showing dimensions, performance data, electrical requirements, drawings indicating location and installation details and test results.

8.7 Testing and Inspection

Testing of each piping system shall be as per International Plumbing Codes. The contractor's designer shall specify that all new, altered, extended, or replaced plumbing systems shall be left uncovered and unconcealed until it has been tested and approved. The installation contractor shall furnish all equipment, materials, and labor required for testing a plumbing system. All such tests shall be carried out in the presence of the Contracting Officer and full written records of the test data and final settings shall be submitted to the Contracting Officer.

The final test shall include a smoke test for drainage and vent system and pressure test for the domestic water piping. After completing the work, the Contractor shall demonstrate that all plumbing systems operate to fully satisfy the function for which these systems have been designed. The Contractor shall test, adjust, balance and regulate the system and its controls as necessary until the required designed conditions are met. The Contractor shall include tests for interlocks, safety cutouts and other protective devices to demonstrate safe operation. After all tests are complete, the entire domestic hot and cold water distribution system shall be disinfected. The system shall not be accepted until satisfactory bacteriological results have been obtained.

9 FIRE PROTECTION

9.1 GENERAL

Facility construction and fire protection systems shall be installed in accordance with the publications listed herein and the publications referenced therein. Where a conflict occurs among various criteria, the more stringent requirement shall take precedence.

9.2 BUILDING CONSTRUCTION

Building construction shall conform to fire resistance requirements, allowable floor area, building height limitations and building separation distance requirements of the building code.

9.3 FIRE PROTECTION EQUIPMENT

Per user, a sprinkler system is not required and is not provided.

9.4 FIRE ALARM AND DETECTION

Per user, a fire alarm and detection system is not required and is not provided.

9.5 WATER SUPPLY FOR FIRE PROTECTION

Water supply for fire protection is not required and is not provided.

9.6 PORTABLE FIRE EXTINGUISHERS

Portable fire extinguishers (PFEs) shall be provided (and installed) in the Kitchen, DFAC, and in each hallway in accordance with the requirements of NFPA 10. Portable fire extinguishers shall be Multi-purpose Dry Chemical rated 4A:60B:C. Extinguishers shall be wall-mounted on hanger hooks with at least 12 inches clearance from the floor in easily accessible locations. Travel distance to an extinguisher from any location in the building shall be no greater than 75 feet.

10 ELECTRICAL

10.1 SCOPE OF WORK

10.1.1 General. Contractor shall construct following systems in compliance with the attached contract drawing and as described below. Systems shall include but not limited to:

(a) On-site Prime Power Generating Plant
(b) Exterior Underground Secondary Power Distribution System
(c) Interior Secondary Distribution System
(d) Lighting and power branch circuitry
(e) Interior telephone wiring
(f) Closed Circuit Television (CCTV) System.
(g) Lightning Protection System

All of the systems shall be designed for the ultimate demand loads, plus 20% spare capacity. Above Systems shall be designed for and to provide service to the following facilities as a minimum:

1. ANP Headquarters
2. Guard Shacks (2)
3. Guard House (1)
4. Guard Towers (4)
5. Power Plant
6. Administration Building - A (Future) Not-In-Contract
7. Administration Building - B (Future) Not-In-Contract
8. Well House

See Site Plan for details.

10.2 DESIGN CRITERIA

10.2.1 Applicable Standards

a. National Fire Protection Association, NFPA 70 (National Electric Code, 2005 Edition).

b. National Fire Protection Association, Life Safety Code, NFPA 101

c. National Fire Protection Association, Lightning Protection Code, NFPA 780

d. Illuminating Engineering Society of North America (IES)

10.2.2 Design shall be in metric units.

10.2.3 Conflicts between criteria and/or local standards shall be brought to the attention of the Contracting Officer for resolution. In such instances, all available information shall be furnished to the Contracting Officer for approval.

10.3 MATERIAL

10.3.1 General: Unless noted otherwise, all material used shall be in compliance with the requirements of the applicable German (DIN) Standards. In the event DIN Standard material is unavailable, contractor may then select comparable British Standard (BS), or Underwriters Laboratories Inc. (UL) listed material. Equipment enclosure types shall be in compliance with the National Electrical Manufacturer's Association (NEMA) or the International Electro-Technical Committee (IEC) standards. Material and equipment installed under this contract shall be for the appropriate application.

10.3.2 Standard Product: All material and equipment shall be a standard product of a manufacturer regularly engaged in the manufacture of the product and shall essentially duplicate items that have been in satisfactory use for at least two (2) years prior to bid opening.

10.3.3 Design Conditions: All equipment shall be rated and designed for 50 Degree Centigrade and elevation of 2000 meters above sea level.

10.3.4 Restrictions: Aluminum conductors shall not be used or specified. Neutral conductors shall be considered current carrying conductors and shall be sized the same as phase conductors. Reduced sized neutral conductors shall NOT be permitted.

10.4 DESIGN REQUIREMENTS

10.4.1 Power Plant: On-site Prime Power Generating Plant shall be provided for this Compound as per that attached drawings. Electrical equipment shall include, but not be limited to, diesel engine generators, secondary voltage switchboard, day tanks, relaying equipment and all other auxiliary equipment that is necessary for operating a Prime Power Plant. All major equipment shall have brief operating instructions posted on them in English and Afghan languages. Secondary wiring within the building shall be per paragraph ‘Secondary Power Distribution System’, as noted below. All cabling within the Power Plant associated with Power Generation (Generator to Switchboard) shall be installed underground in direct buried PVC Schedule 40 (Sch 40) conduits. Power plant shall be provided with a Lightning Protection System.

10.4.1.1 Generators: Two (2) generators, rated at 120 kW each, shall be provided inside 'weather-proof' enclosures and shall be for exterior application. Generators shall be skid mounted standard industry size, 1500 RPM; diesel-engine Prime Power rated units. Generating voltage shall be 3 phase, 380 volts and 50 Hertz, for Compound wide Secondary Power Distribution, through the generator switchboard as described below. Generator starting shall be electric. Each generator shall be provided with a day tank with a minimum fuel capacity of 8 hours operating at 100% generator rating (name plate kW rating). Sharing of Compound demand load between the generators shall be via generator synchronizing equipment. See drawings for detail requirements.

10.4.1.2 Load Bank: Contractor shall provide a factory manufactured, industry standard permanent load bank connected to the generator secondary switchboard bus to supplement for low demand load on the operating generator. Load bank shall be rated at a minimum of 40 kW, with 5, 10, or 20 kW load steps. Unit shall be provided with a control panel and necessary circuit protection. Load bank shall automatically prevent the generator(s) from operating at less than 40% load and keep the generator(s) from “wet-stacking”.

10.4.1.3 Fuel Storage / Distribution System: Refer to Mechanical Section 01015 and design drawings for generator fuel storage / distribution system requirements.

10.4.1.4 Miscellaneous: Contractor shall be responsible for providing all relaying, metering and power plant grounding equipment necessary for safe and efficient operation of the power plant. Relaying shall include, but not be limited to, differential, locking-out, over current, directional and reverse power.

10.4.1.5 Generator Switchboard: Generator Switchboard shall be located with the generators and shall be the central distributing point for the Site Secondary Power Distribution System. Switchboard shall be circuit breaker type, consisting of a main circuit breaker, feeder circuit breakers for service to various facilities on the Compound. Switchboard shall be sized and provided with the required number of circuit breakers to service all facilities in this Contract and future facilities identified on the Site Plan. In addition, the Switchboard shall be provided with two (2) spaces for any future 3 pole circuit breakers. See Power Plant design drawings for details. Switchboard shall be provided inside a 'weather-proof' enclosure and shall be for exterior application.

10.4.1.6 Operating Instructions: Contractor shall provide, mounted in a frame, a complete electrical one-line diagram of the power plant with detail operating instruction. Instructions shall be mounted inside respective generator and switchboard enclosures. Similarly, complete fuel and cooling system schematic diagrams shall also be provided with the operating instructions. Brief operating instructions shall be posted on major components at the power plant. These instructions shall be written in English and Afghanistan languages.

10.4.2 Site Secondary Power Distribution System: This shall include installation of Secondary Power Distribution Systems in underground, direct buried PVC Schedule 40 conduits system. System shall include hand-holes for secondary power cables.

10.4.2.1 Raceways: Exterior raceways (conduits) shall be installed at a slope towards the hand-hole to avoid collection of water in the raceway. Conduit shall be PVC, Schedule 40. Secondary cable shall be installed in conduit no less than 50mm (2 inch). Duct bank conduits shall be cleaned with a wire mandrel prior to the installation of cables. Minimum of two (2) spare conduits shall be provided in all main trunks and capped at both ends. Top of the conduits shall be below the frost line or a minimum of 24 inch (600mm) below grade.

10.4.2.2 Cables: All secondary voltage cables shall be copper, designed for underground installation and shall have appropriate secondary voltage ratings.

10.4.3 Secondary Power Distribution System: Secondary Power shall be 380/220 volts, 3 phase, 4 wire, 50 Hz. Building secondary power distribution system shall include main distribution panel. All panel boards shall be factory fabricated, ‘bolt-on’ circuit breaker type and each provided with a main circuit breaker. In large buildings, with 225 Amp or greater service, separate lighting and power panels shall be provided. Minimum size circuit breaker shall be rated at 16 amperes. Circuit breakers shall be connected to bus bar(s) within the panel boards. Daisy chain (breaker-to-breaker) connection(s) shall not be acceptable. Indoor distribution panels and load centers shall be flush mounted in finished areas. All circuit breakers shall be labeled with an identification number corresponding to the panel schedule. A 3-pole circuit breaker shall be a single unit and not made up of 3 single pole circuit breakers connected with a wire or bridged to make a 3-pole breaker. All wiring shall be copper, minimum # 12 AWG (4mm sq) and installed in surface mounted metal conduits. All panels shall be provided with a minimum of 20% spare capacity for future load growth. Power receptacles (outlets) shall be duplex, 240 volts, 50 HZ, German (DIN) Standard. All splicing and terminations of wires shall be performed in a junction or device boxes. Proper wire nuts/connectors shall be used for splicing wire. No twist-wire connections with electrical tape wrapped around it shall be acceptable. All electrical installation shall be in accordance with the requirements of NFPA 70 (National Electric Code). Main Distribution Panel in large buildings shall be provided with an ammeter, voltmeter and kilowatt-hour meter. Selector switch shall be provided for reading all 3 phases. All service entrance cables and equipment, such as main distribution panels etc., to the facilities shall be sized for the ultimate facility loads, to include any heating and air-conditioning loads, initial and / or future, to be provided by others.

10.4.3.1 All panels shall be phase balanced; phase imbalance shall not exceed 10% at each panel.

10.4.3.2 Receptacles: General purpose receptacles shall be duplex, grounding (earthed) type, 'surface' wall mounted type, color ivory and installed 500 mm above finished floor (AFF). In general, provide a minimum of one (1) receptacle on each wall 0.6 meter or wider. On longer walls provide one (1) receptacle spaced at every three (3) meters intervals. Each corridor shall be provided with at least one (1) receptacle. CEE Type receptacles with plugs (2P+E (240v) or 3P+E (380v) and with appropriate rating, shall be provided for, but not be limited to, kitchen equipment and any other type of large plug-able equipment. Receptacle shall be complete to include box, cover plate and necessary screws/connectors and of the type most commonly used in Afghanistan. Receptacles near sinks or lavatories shall be switch operated and Ground Fault Circuit Interrupter (GFCI), or Residual Current Disconnect (RCD) type, with the trip setting of 30 milliampere or less.

10.4.3.3 Lighting: Light Fixtures: Lighting fixtures shall be a standard manufacturer's product. Fluorescent light fixtures shall be power factor corrected and equipped with standard magnetic ballast(s). All light fixtures shall be capable of receiving standard lamps used and available locally. Light fixtures shall be mounted at 2.7M, minimum, AFF. Fixtures may be pendant or ceiling mounted, depending on the ceiling height and type. Emergency lighting, emergency egress 'exit' lights and exterior building lighting shall be provided, as shown on the drawings.
Light fixtures provided inside jail cells shall be vandal resistant and detention center grade fixtures. All fixtures shall be fully factory wired.

10.4.3.3.1 Light Switch: Light switch shall be single pole. Minimum of one light switch shall be provided in every room. Lighting in large rooms/areas may be controlled from multiple switches. Lighting contactors may be used to operate lighting in open or large bay areas.

10.5 Search Light: Search light shall be prison / security search light and provided on top of each Guard Tower. Search light shall be operable from inside the guard tower cab. See design drawings for details.

10.6 Conductors: All cable and wire conductors shall be copper. Conductor jacket or insulation shall be color coded to satisfy local utility requirements.

10.7 Grounding & Bonding: Grounding and bonding shall comply with the requirements of NFPA 70. Underground connections shall be exothermal welded. All exposed non-current carrying metallic parts of electrical equipment in the electrical system shall be grounded. Insulated grounding conductor (separate from the electrical system neutral conductor) shall be installed in all feeder and branch circuit raceways. Grounding conductor shall be green-colored, unless the local authority requires a different color-coded conductor. Ground rods shall be 20mm in diameter, 3 meter long and of copper-clad steel. Ground resistance shall not exceed 25 ohms when measured more than 48 hours after rainfall.

10.8 Enclosures: Enclosures for exterior and interior applications shall be NEMA Type 3S (IEC Classification IP54) and NEMA Type 1 (IEC Classification IP10), respectively.

10.9 Closed Circuit Television (CCTV): CCTV System shall be complete and basic. System shall include CCTV cameras, cable installed in metal conduit system, digital video recorder and monitor(s). CCTV cameras shall be placed such that to monitor the jail cells. CCTV monitor shall be located in the Guard Room. Final location of the CCTV monitor(s) and cameras shall be coordinated with the Contracting Officer. See design drawings for details.

10.10 Telephone/DATA System: Telephone/DATA System shall include cross-connect box, duplex RJ-45 telephone outlets with a minimum of 4 pair Category 5E (CAT 5E) cable terminating at each outlet (jack). The Contracting Officer shall determine outlet locations for individual rooms. Telephone wiring shall be surface mounted in metal conduits. Two (2) 50mm conduits with pull-wire shall be provided from the cross connect box to the outside communication hand-hole. Exterior plant telephone cabling shall be provided/installed by others/User. See design drawings for details.

10.11 Lightning Protection System: Lightning Protection System shall be provided in accordance with the requirements of NFPA 780 and shall be for all facilities to be built under this Contract.

10.12 Identification Nameplates: Major items of electrical equipment, such as the generators, switchboard, panel boards and load centers, shall be provided with a permanently installed engraved identification nameplate.

10.13 Schedules: All panel boards and load centers shall be provided with a panel schedule. Schedule shall be typed written in English and Afghan languages.

10.14 Single Line Diagrams: Complete single line diagram shall be provided in the Power Plant Switchboard Room and in Panelboards in each building. Single line diagram shall show all panels serviced from the generator switchboard and from main distribution panel in each building.

10.15 Acceptance Tests: All systems shall be tested in the presence of the COR for satisfactory operation prior to the turnover and acceptance of the facilities by the Government.

-- End of Section --

(End of Summary of Changes)