AMENDMENT OF SOLICITATION/MODIFICATION OF CONTRACT

1. CONTRACT ID CODE	PAGE OF PAGES
	1 / 106

2. AMENDMENT/MODIFICATION NO.	3. EFFECTIVE DATE	4. REQUISITION/PURCHASE REQ. NO.	5. PROJECT NO.(If applicable)
U0001	23-Jul-2007		

6. ISSUED BY	CODE	7. ADMINISTERED BY (If other than item 6)	CODE
AFGHANISTAN ENGINEER DISTRICT US ARMY CORPS OF ENGINEERS KABUL APO AE 09356	W917PM	See Item 6	

8. NAME AND ADDRESS OF CONTRACTOR (No., Street, County, State and Zip Code)			
		X	9A. AMENDMENT OF SOLICITATION NO. W917PM-07-R-0086
		X	9B. DATED (SEE ITEM 11) 12-Jul-2007
			10A. MOD. OF CONTRACT/ORDER NO.
			10B. DATED (SEE ITEM 13)
CODE	FACILITY CODE		

11. THIS ITEM ONLY APPLIES TO AMENDMENTS OF SOLICITATIONS

[X] The above numbered solicitation is amended as set forth in Item 14. The hour and date specified for receipt of Offer [ ] is extended, [ ] is not extended.

Offer must acknowledge receipt of this amendment prior to the hour and date specified in the solicitation or as amended by one of the following methods: (a) By completing Items 8 and 15, and returning _____ copies of the amendment; (b) By acknowledging receipt of this amendment on each copy of the offer submitted; or (c) By separate letter or telegram which includes a reference to the solicitation and amendment numbers. FAILURE OF YOUR ACKNOWLEDGMENT TO BE RECEIVED AT THE PLACE DESIGNATED FOR THE RECEIPT OF OFFERS PRIOR TO THE HOUR AND DATE SPECIFIED MAY RESULT IN REJECTION OF YOUR OFFER. If by virtue of this amendment you desire to change an offer already submitted, such change may be made by telegram or letter, provided each telegram or letter makes reference to the solicitation and this amendment, and is received prior to the opening hour and date specified.

12. ACCOUNTING AND APPROPRIATION DATA (If required)

13. THIS ITEM APPLIES ONLY TO MODIFICATIONS OF CONTRACTS/ORDERS. IT MODIFIES THE CONTRACT/ORDER NO. AS DESCRIBED IN ITEM 14.

[ ] A. THIS CHANGE ORDER IS ISSUED PURSUANT TO: (Specify authority) THE CHANGES SET FORTH IN ITEM 14 ARE MADE IN THE CONTRACT ORDER NO. IN ITEM 10A.

[ ] B. THE ABOVE NUMBERED CONTRACT/ORDER IS MODIFIED TO REFLECT THE ADMINISTRATIVE CHANGES (such as changes in paying office, appropriation date, etc.) SET FORTH IN ITEM 14, PURSUANT TO THE AUTHORITY OF FAR 43.103(B).

[ ] C. THIS SUPPLEMENTAL AGREEMENT IS ENTERED INTO PURSUANT TO AUTHORITY OF:

[ ] D. OTHER (Specify type of modification and authority)

E. IMPORTANT: Contractor [ ] is not, [ ] is required to sign this document and return _____ copies to the issuing office.

14. DESCRIPTION OF AMENDMENT/MODIFICATION (Organized by UCF section headings, including solicitation/contract subject matter where feasible.)

ANA Garrison K-Span Kunduz

1. Delete Section 00010 Proposal Schedule in its entirety and replace with the attached revised Section 00010 Proposal Schedule.
2. Delete Section 01010 Scope of Work and replace with the attached revised Section 01010 Scope of Work.
3. Changes to Drawings: The solicitation omitted design drawings Volume 2 and Volume 3. The omitted drawing are included as part of this amendment.
4. Deletlet Section 001015 Technical Requirements and Replace with revised Section 001015 Technical Requirements.
5. Delete Section 001321, paragraph 3.4.5 Network Analysis System and replace with Revise Section 01321, paragraph 3.4.5 Network Analysis System.

Except as provided herein, all terms and conditions of the document referenced in Item 9A or 10A, as heretofore changed, remains unchanged and in full force and effect.

15A. NAME AND TITLE OF SIGNER (Type or print)		16A. NAME AND TITLE OF CONTRACTING OFFICER (Type or print) TEL: EMAIL:	
15B. CONTRACTOR/OFFEROR (Signature of person authorized to sign)	15C. DATE SIGNED	16B. UNITED STATES OF AMERICA BY (Signature of Contracting Officer)	16C. DATE SIGNED

SECTION SF 30 BLOCK 14 CONTINUATION PAGE

SECTION SF 30 - BLOCK 14 CONTINUATION PAGE

6. Appendix C: "Specification June 07" has been modified; replace with attached revised file "Specifications 26 June 07".

The Drawings are to large to download please pick up drawings at:

US Army Corps of Engineers, House 1, Street 1, West Wazir Akbar Khan (behind Aman High School), Kabul, Afghanistan.

REVISED SECTION 00010

PROPOSAL SCHEDULE

The Contractor shall provide a price for all items, including those labeled, "Optional Items." The Government will evaluate the Contractor's entire proposal to determine which CLINs represent the best value to the Government.

No.	Description	Qty	Unit	Unit Price	Total Amount
1.	Base Proposal				
	0001 Design Program				
	0001A Design Costs (Include Survey, Site Master Plan):	Sum	Job	xx	$_____
	Sub-Total Design only				$_____
	0002 Site Development				
	0002A Grading, Force Protection, Mobilization, (Complete Site Storm Water Management):	Sum	Job	xxx	$_____
	0002B Sewage Treatment & Sewer System (3 Infantry Battalion Sewer System)	Sum	Job	xxx	$_____
	0002C Power Plant & Distribution System (3 Infantry Battalions power)	Sum	Job	xxx	$_____
	0002D Water Well, Storage & Distribution (3Infantry Battalion Water System)	Sum	Job	xxx	$_____
	002E Access Gravel Road (4 KM)	Sum	Job	xxx	$_____
	002F Concrete Bunkers	Sum	Job	xxx	$_____
	Sub-Total Site Development only				$_ _____
	0003 Base Buildings (Infantry Battalions & DFAC Construction)				
	0003A K Span Facilities -18-Barracks Bldgs, 3-Toilet Bldgs. 3-Storage Bldgs,1-DFAC Bldg, 3- Ammo Storage Bldgs, 3-POL Bldgs. & 3-motorpool:	Sum	Job	xxx	$_____
	0003B Embedded Trainer Facilities, Interpreter Facilities:	Sum	Job	xxx	$_____
	0003C USACE Special Facilities	Sum	Job	xxx	$_____
	Sub-Total Buildings only				$_____

TOTAL BASE PROPOSAL ITEMS $_____
(total of all above costs - includes design and construction)

0004 Optional BOQ and Training Buildings and Site Development

0004A Grading and Storm Water Management	Sum	Job	xxx	$_ _____
0004B Sewer System	Sum	Job	xxx	$_____
0004C Power & Distribution System	Sum	Job	xxx	$_____
0004D Water Distribution System	Sum	Job	xxx	$_____
0004E K Span Facilities- 4-BOQ Bldgs., 1-Training Bldg.:	Sum	Job	xxx	$_____
Total BOQ and Training Option	Sum	Job	xxx	$_____

0005 Optional CS Battalion Buildings and Site Development

0005A Grading and Storm Water Management	Sum	Job	xxx	$_____
0005B Sewer System	Sum	Job	xxx	$_____
0005C Power & Distribution System	Sum	Job	xxx	$_____
0005D Water Distribution System	Sum	Job	xxx	$_____
0005E K Span Facilities- 4-Barracks Bldgs., 1-Toilet Bldg., 1-Storage Bldg.:	Sum	Job	xxx	$_____
0005F 1- Battalion HQ, 1-Maintenance Bldg. 1- Ammo Supply Bldg. 1-POL Bldg. & Motorpool	Sum	Job	xxx	$_____
Total CS Battalion Option	Sum	Job	xxx	$_____

0006 Optional CSS Battalion Buildings and Site Development

0006A Grading and Storm Water Management	Sum	Job	xxx	$_____
0006B Sewer System	Sum	Job	xxx	$_____
0006C Power & Distribution System	Sum	Job	xxx	$_____
0006D Water Distribution System	Sum	Job	xxx	$_____
0006E K Span Facilities- 3-Barracks Bldgs., 1-Toilet Bldg.:	Sum	Job	xxx	$_____

0006F 1- Battalion HQ, 1- Maintenance Bldg, 1- Ammo Supply Bldg, 1-Storage Bldg, 1-POL Bldg, & Motorpool	Sum	Job	xxx	$_____
Total CSS Battalion Option	Sum	Job	xxx	$_____

0007 Optional Brigade HQ and Garrison HQ Buildings and Site Development

0007A Grading and Storm Water Management	Sum	Job	xxx	$_____
0007B Sewer System	Sum	Job	xxx	$_____
0007C Power & Distribution System	Sum	Job	xxx	$_____
0007D Water Distribution System	Sum	Job	xxx	$_____
0007E K-Span- 3 Barracks Bldgs, 1-Toilet Bldg.:	Sum	Job	xxx	$_____
0007F 1-Brigade HQ, I- Garrison HQ, 1-Clinic, 1-POL Storage, 1-Ammo Supply Point, 1 Entry Station, 1-Communication Building, 1- Firehouse, 1-Garrison Maintenance Building and 4- Motorpools	Sum	Job	xxx	$_____
Total Brigade and Garrison HQ Option	Sum	Job	xxx	$_____

0008 Optional Infantry Battalion- 3 Battalion HQs, 3 INF BN Motorpools, 18- Barracks Interior Walls, Power Distribution Construction:	Sum	Job	xxx	$_____
0009 Optional Road Paving 4 KM:	Sum	Job	xxx	$_____
0010 Optional Road Network Const & Paving 2 KM	Sum	Job	xxx	$_____
0011 Optional Power, Dist. & DPW Center:	Sum	Job	xxx	$_____
0012 Optional Power, Dist. & Detention Center:	Sum	Job	xxx	$_____
0013 Optional Power, Dist & Community Center:	Sum	Job	xxx	$_____
0014 Optional Power, Distribution & Central Warehouse:	Sum	Job	xxx	$_____
0015 Optional Power & Sports Field:	Sum	Job	xxx	$_____
0016 Optional Power & Helipad:	Sum	Job	xxx	$_____
0017 Optional Spare Parts:	Sum	Job	xxx	$_____

TOTAL OPTIONAL PROPOSAL ITEMS $_____
(total of all above costs - construction)

TOTAL PROPOSAL $_____

PROPOSAL SCHEDULE NOTES

1. Offeror shall submit prices on all items.

2. Only one contract for the entire schedule will be awarded under this solicitation. This project will be awarded as a firm fixed price contract. This project will be awarded as a lump sum contract. This Proposal Schedule is an accounting tool for allocating funds to applicable budget.

3. All costs associated with this project i.e., security, insurance etc.,) shall be included in the line items in the bidding schedule.

4. EXERCISE OF OPTIONAL BID ITEMS: Optional bid items may, at the option of the Government, be exercised at any time within 120 calendar days after notice to proceed.

5. Six Percent Limitation for Design. Reference FAR 36.606-70 Statutory fee limitation (6 % of the construct cost).

(c) The following are examples of services that, for the purpose of this section only, are not considered an integral part of the preparation of designs, plans, drawings, and specifications, and may be excluded from the A-E fee when determining compliance with the statute.

(i) Initial site visits.

(ii) Field, topographic, property, boundary, utility, and right-of-way surveys.

(iii) Subsurface explorations and borings; soils and materials testing and resultant reports.

(iv) Feasibility, functional, and economic studies.

(v) Flow gaugings, model testing.

(vi) Preparation or verification of as-built drawings.

(vii) Preparation of general and development criteria.

(viii) Preparation of general and feature design memoranda.

(ix) The services of consultants, where not specifically applied to the preparation of designs, plans, drawings or specifications.

(x) Preparation of environmental impact assessments, statements, and supporting data.

(xi) Construction phase services.

(xii) Models, renderings, or photographs.

(xiii) Reproduction of designs for review purposes.

(xiv) Travel and per diem allowances in connection with services that are not directly related to the preparation of designs, plans, drawings, or specifications.

6. COMMENCEMENT, PROSECUTION, AND COMPLETION OF WORK:
The following order of work shall apply before start of optional bid items: All base bid contract line items shall be 75 percent construction complete or more prior to commencing construction work of any of the optional bid items. All base bid line items shall be complete before any of the awarded optional bid items.

END OF SECTION

SECTION 01010
SCOPE OF WORK
KUNDUZ

1. GENERAL
The project consists of a design/build complete facility at the Afghan National Army Brigade site at Kunduz, Afghanistan. The project is defined as the design, material, labor, and equipment to construct the following as a minimum: all structures (type and dimensions as defined in the drawings), production water wells, water storage tanks, permanent utilities to a defined termination point, temporary utilities, site grading, site drainage and runoff grading and contouring, access road, temporary fencing, and other supporting infrastructures. The Contractor shall provide all site drainage features and appurtenances as described in the text or identified on the sketches and as required to for site grading and drainage. It is the expectation of the Government that the Contractor exercise maximum flexibility and innovation in providing a quality end product that meets or exceeds the technical requirements with in this section. The work within this contract shall meet and be constructed in accordance with current U.S. design and International Building Codes (IBC), Life Safety Codes (NFPA-101), Force Protection and security standards. A partial listing of references is included herein:

IBC, International Building Codes 2003
NFPA 101, Life Safety Codes
UFC 4-010-01, DoD Minimum Anti-Terrorism Standards for Buildings.

1.1 ENGLISH LANGUAGE REQUIREMENT

All information shall be presented in English. The Contractor shall have a minimum of one English-speaking representative to communicate with the COR at all times when work is in progress.

1.1.2 SUBMITTALS

Submittals and a Submittal Register are required as specified in Section 01335 of the Basic Contract.

1.1.3 **WARRANTY**: The Contractor shall repair and/or replace all defective materials or workmanship, at his own cost for a warranty period of one (1) year commencing upon the date of final acceptance of the project.

1.2 **LOCATION**:

All work in this contract is for the design and construction of ANA Brigade facilities at Kunduz, Afghanistan. Kunduz Brigade has a 1150 meter X 1150 meter footprint. Approximate coordinates are:

68.853066D E	68.869533D E
36.873149D N	36.876103D N
68.859056D E	68.875419D E
36.846520D N	36.849443D N

1.3 Contractor shall use design schematics included in Appendix A, the Contractor will need to supplement per RFP and Code Analysis during the design phase. Note: All K-Span type buildings

in the Kunduz Brigade are brand new and have no drawings available. Design drawings of select buildings are provided at Appendix C. The Contractor will need to site adapt these drawing packages to fit this site, design, draw and edit as required to meet the requirements of this RFP. Contractor shall prepare complete designs and specifications per RFP for all buildings and systems for review and approval by the Government. All designs and specifications created by the Contractor shall become the property of the Government and may be used in the future by the Government for Construction of similar facilities without further compensation to the Contractor. The Contractor shall site-adapt the K-Span designs to assure that the designs reflect the requirements of this RFP, making all changes as required. Contractor shall provide all Design Analysis, Specifications and Working Drawings for the entire Brigade including options for the 35%, 99% and 100%. In addition to printed full-sized copies, the Contractor shall provide electronic versions of all design documentation in AUTOCAD 2006 (version) to the AED in Kabul and the Residence Office. Files shall be arranged on a CD with each facility clearly identified as a separate subdirectory, with all files for that facility contained in that subdirectory. Each disk shall have an adhered printed label listing contents; hand-written labels are unacceptable.

1.4 SITE SECURITY
The Contractor shall provide perimeter force protection security for the developing site. Security may include but is not limited to fence and private security guards. Perimeter security shall prevent unauthorized site access and provide safety protection to the Contractor's work force and government personnel for the duration of the project. The Contractor is solely responsible for security; however, local police should be coordinated with regarding security.

1.5 The master plan site shall include layout of all option items and a planned future Mosque (785m2) to be master planned (in this contract). The contractor shall provide utility connections designed and sized for the future connection of these option items and Mosque facility in this contract. The Contractor shall provide water line, sewer line, electrical conduit, and communications conduit. All connections shall be within 1.5 meters of each option item and Mosque building site.

1.6 Work shall be executed in accordance with the Technical Requirements in Section 01015, all solicitation requirements, the attached schematic building layouts, and the attached designs.

TABLE 1.1 WORK ITEMS
Base Bid Items

Work Item	Completion Dates-Days from NTP
2.1 Site Survey/Master Planning	30 days
2.2 Site Grading, Road Network, and Storm Water Runoff	210 days
2.3 Sewage Treatment Plant	210 days
2.4 Temporary Electrical Power-NOT USED	NOT USED
2.5 Permanent Electrical Power & Distribution	210 days
2.6 Water System	210 days
2.7 Force Protection Enclosure	150 days
2.8 Infantry Battalion Complex (1)	240 days
2.9 Infantry Battalion Complex (2)	240 days
2.10 Infantry Battalion Complex (3)	240 days
2.11 Embedded Training Team Compound	240 days
2.12 DFAC NO 1	240 days from award of option
2.13 Brigade & Garrison HQ Complex BHC/GHC	240 days from award of option
2.14 Bachelor Officers Quarters BOQ	240 days from award of option
2.15 Refueling Point	240 days from award of option
2.16 Reception Center	240 Days from award of option
2.17 Communications Building	240 days from award of option

TABLE 1.2 WORK ITEMS
OPTION ITEMS

Order of option items has nothing to do with priority of award.
Options may be awarded UP TO 120 days after notice to proceed

Work Item	Completion Dates-Days from Award of Options
2.18 Medical Clinic	180 days
2.19 Fire Station	180 days
2.20 Helipad	180 days
2.21 Sports Field	180 days
2.22 Combat Services Support Complex CSS	180 days
2.23 Combat Support Battalion Complex CS	180 days
2.24 Central Receiving Warehouse	180 days
2.25 Training Building	180 days
2.26 DPW Shop Building	180 days
2.27 Community Center (MWR)ZX	180 days
2.28 Detention Center	180 days
2.29 Solid Waste	180 days
2.31 Anti Vehicle Trench	180 days
2.32 Concrete Bunkers	180 days
2.33 Arms Storage Building	180 days
2.34 Laundry Building	180 days
2.35 Ammo Supply Point (ASP)	180 days
2.36 Solid Waste Management and Disposal	180 days

2. GENERAL REQUIREMENTS FOR FACILITIES

All requirements set forth in the Scope of Work, but not included in the Technical Requirements, shall be considered as set forth in both, and vice versa. Provide heating and cooling systems. All toilets shall be eastern style, except where western toilets are designated on the drawings. All toilets shall face north or south.

All standard construction amenities and details such as heating, lighting, site drainage, utility connections, etc. shall be implied as a design and construction requirement. Drawings referenced are contained in Section 01015 or Appendix A.

The design and construction work shall include but not be limited to the following sub-paragraphs.

2.1 SITE SURVEY AND MASTER PLANNING:

The Site Plan shall be approximately 1150 meters X 1150 meters, see Section 1.2 Location for grid coordinates in of Site. The Contractor shall perform a site topographic survey; prepare a Master Plan for the entire facility including siting optional items, a complete Site Drainage Plan with existing grades, proposed grades, perimeter force protection and building finished floor elevations. The Contractor shall not locate facilities in wadis, dry river beds or areas subject to flooding. The development of the master plan will include participation in a Planning Charette that will be conducted at the Afghanistan Engineer District (AED), Qalaa House in Kabul. The Charette shall be completed within 30 days of contract award. A Site Plan required for this project will be designed per this RFP. Contractor shall survey entire site. The master plan site shall include layout of Base Bid Items and all Option Items to be master planned and built (in this contract).See Appendix A for layout.

2.2 SITE GRADING, ROAD NETWORK, AND STORM WATER RUNOFF:

Perform complete site grading and installation of all required drainage structures per the Site Landscaping and Drainage Plan that will be prepared as part of this scope of work. Conduct topographic survey and mapping of the project site to include any existing and/or associated utilities, wet/dry creek beds, hydrological, geological, and botanical or other physical conditions that could impact on design. Design and construct the road network connecting main road or highway to the main entrance of the compound, all roads within the compound. Road design and construction shall include road signage, using international symbols for speed, curves, slow, and stop signs. Road construction shall include the installation of all required drainage structures.

The contractor shall construct a permanent road from the main road to the base entry and within the base. The road shall be constructed within the contractor's proposed alignment of the roads for the master plan. The roads shall meet the grading and road construction requirements identified in section 01015, including compacted crushed aggregate base course. The road is part of the base bid and shall be constructed for an estimated four (4) kilometers. Paving for the 4 kilometer road shall be included as part of the optional CLIN for road network.

2.3 SEWAGE TREATMENT PLANT

Sewer collection system shall be designed to accommodate a total occupant load of (4,000) persons. Provide an aerated stabilization pond system effluent pond, and sewer piping with manholes and cleanouts. The lowest elevation sewage treatment pond shall include a pump for recycling gray water. Exterior sanitary sewer line construction shall include service to all buildings Contractor shall design sanitary sewer collection system using approved field survey data and finished floor elevations. Depending upon the topography and building location, the most practical location of sanitary sewer lines is along one side of the street. In other cases they may be located behind buildings midway between streets all sewers shall be located outside of the roadways as much as practical, and minimize the number of roadway crossings. Construction required shall include appurtenant structures and building sewers to points of connection with Building drains

1.5m outside the Building, to which the sewer collection system is to be connected. Design Drawing Package of this building shall be provided for construction to successful Contractor. If the sewage treatment system cannot be completed on schedule, the contractor shall provide temporary sewage collection and disposal services.

2.4 TEMPORARY ELECTRICAL POWER & DISTRIBUTATION SYSTEM-NOT USED

2.5 PERMANENT ELECTRICAL POWER & DISTRIBUTION SYSTEM
Design and build a Permanent Power Plant including Building and power distribution system for Kunduz (Kunduz Base Bid Items). Generators shall be provided for on-site power. Provide refueling point adjacent to the exterior stone wall, location subject to the approval of the COR. It is the Contractor's responsibility to calculate the full load requirements and determine the size of the generators necessary to provide total electrical power supply for all base bid buildings and power requirements. Number of generating units shall be based on N+2 principal. Where 'N' would represent number of units required to meet initial demand loads plus 25% spare capacity and '+2' would represent spare generators available at all times. Provide switch gear for future connection to Permanent power, see optional items. Generators shall have fuel heaters for cold weather operation. Connect Generators to concrete foundation with vibration isolators. Provide a generator pads that dampens vibrations to the surrounding building. Building type shall be Pre-Engineered metal buildings on concrete slab with equipment pads with reinforced CMU walls. Provide space in the prime power building for two (2) future generators to include all necessary equipment pads and connection conduits. Contractor shall fill tanks full and refill at the end of testing before project turn over. See Appendix A for drawings. If the contractor cannot provide permanent power on schedule, temporary power shall be provided to the facilities.

2.5.1 PERMANENT ELECTRICAL POWER FUEL SUPPLY (Base Bid)
Contractor to include bulk fuel storage capacity based on 4 week (30 days) full-load operation for current base bid requirements. After testing generators, Contractor shall provide a full supply of fuel to the tanks at the time of turnover to the Government. All the fuel tanks will be inside a concrete reinforced containment wall and water tight wall to contain any fuel spillage. The volume of the concrete reinforced wall shall be 110% of the fuel tank capacity and shall be 600 mm above top of fuel tank. Provide a 50 mm diameter drain pipe with a valve thru the wall to drain water that may have accumulated inside after a rain. Provide chain link fence and gates around entire fuel storage facility. Provide chain link fence with gates, C-wire, heavy duty hasp and locks at all fuel storage tanks and openings to prevent theft.

2.6 WATER SYSTEM
Design and construct a water system to include development of a ground well water source; water well pumps and service booster pumps, chlorination and water storage tank(s) sized for the entire base build out Master Plan of 4,000 occupants with one day of storage (Average Daily Demand ADD); and water distribution system to serve the entire installation including all buildings in Master Plan. Provide chain link fence and gates around entire water facility. If the contractor cannot provide water on schedule, the contractor shall provide temporary water to the facilities.

2.7 FORCE PROTECTION ENCLOSURE
Base force perimeter size is 1100 meters X 1100 meters. Design and construct a Force Protection Perimeter Fence (4400 meters); approximately 1,400 meters of stone wall and 3000 meters chain link fence. Provide two (2) gates minimum into compound; with guard towers at 400 meter maximum intervals. Provide a Guard House at each opening in the perimeter one at the main gate, and one at the alternate gate; and a Reception Building at the main gate. See Section 01015 for additional Force Protection requirements. Design Drawing Package of this fence shall be provided for construction to successful Contractor.

2.7.2 GUARD TOWERS
Guard towers shall be provided at each corner and at all gates through the Force Protection

Perimeter Fence/Wall and at 400 meter intervals maximum. Construction of guard towers shall be 200 mm reinforced concrete, slab, walls, and ceiling. Provide metal roof and eves to match other buildings on the compound, with gutter and downspout to splash block. Guard towers shall be provided with general lighting and shall be fitted with a prison-grade 360-degree Omni-directional searchlight. Provide built-in counters with two (2) file drawers and one (1) pencil drawer. Provide duplex receptacles shall be as required for general use. Provide red lights inside guard towers to maintain night vision for occupants. Area immediate outside vicinity of guard towers shall be provided with mud grate similar to what is provided at the barracks door and shall be sloped sufficiently drain away from the building. Guard Towers shall have a concrete foundation below the frost line. Guard Facility shall be provided with general illumination, Communication/Data and duplex receptacles. Provide wiring to Communication Building thru a loop to all guard towers and guard houses with a redundant feed to Communication Building. Provide a minimum of two comm. jacks to each tower. Provide built-in counter with 2 file drawers and pencil drawers. Windows shall be 13 mm laminated glass in heavy duty steel frames that open out and up. Provide arm on each side to lock in open position and provide cam latch to lock window in closed position. Provide seals on doors and windows to make dust tight. Provide remote lever controlled 45 million candlepower 500 watt prison grade search light roof mounted on each guard tower roof. Provide electric wall mounted split-pack heat pump units located on wall opposite fence. Provide bullet-resistant entry doors. Design Drawing Package of this building shall be provided for construction to successful Contractor.

2.7.3 GUARD HOUSES

Guard House design shall be shall be 200 mm reinforced concrete, slab, walls, and ceiling. Provide metal roof and eves to match other building on compound. Provide metal roof and eves to match other building on compound. A general space shall be provided for two (2) guards within Guard House. Provide duplex receptacles shall be as required for general use. Provide red lights inside guard houses to maintain night vision for occupants. Windows shall be sliding 13 mm laminated glass in heavy duty sliding aluminum frames. All other spaces mentioned in the standard design shall be provided elsewhere within the site. Areas immediately outside vicinity of Guard House shall be provided with mud grate similar to what is provided at the barracks door and shall be sloped sufficiently drain away from building and pedestrian areas. Guard House shall have a concrete slab foundation below the frost line. Guard House shall be provided with general lighting and shall be fitted with a 360-degree Omni directional searchlight and Communication/Data and duplex receptacles. Provide wiring to Communication Building thru a loop to all guard towers and guard houses with a redundant feed to Communication Building. Provide a minimum of two comm. jacks to each guard house. Provide built in counter with 2 file drawers and pencil drawers. Provide electric wall-mounted split-pack heat pump units. Area immediately outside vicinity of Guard House shall be lighted and provided bullet-resistant entry doors. Design Drawing Package of this building shall be provided for construction to successful Contractor.

2. 8 INFANTRY BATTALION COMPLEX (1)

Design and construct a Infantry Battalion capable of supporting 651 personnel. (42 Officers will Billet at the BOQ). Complex shall consist of the following buildings: 3 - “A” Type Barracks; 3 - “B” Type Barracks; 1- Toilet/Shower Building; 1- Battalion Headquarters Building; w/Toilets; 1- Arms Storage Building; 1- Battalion Storage Building; 1 – Motor Pool; 1- POL Storage Building; 1- Solid Waste Collection Point. See Appendix A for drawings.

2. 9 INFANTRY BATTALION COMPLEX (2)

Design and construct a Infantry Battalion capable of supporting 651 personnel. (42 Officers will Billet at the BOQ). Complex shall consist of the following buildings: 3 - “A” Type Barracks; 3 - “B” Type Barracks; 1- Toilet/Shower Building; 1- Battalion Headquarters Building; w/Toilets; 1- Arms Storage Building; 1- Battalion Storage Building; 1 – Motor Pool; 1- POL Storage Building; 1- Solid Waste Collection Point. See Appendix A for drawings.

2. 10 INFANTRY BATTALION COMPLEX (3)

Design and construct a Infantry Battalion capable of supporting 651 personnel. (42 Officers will Billet at the BOQ). Complex shall consist of the following buildings: 3 - "A" Type Barracks; 3 - "B" Type Barracks; 1- Toilet/Shower Building; 1- Battalion Headquarters Building; w/Toilets; 1- Arms Storage Building; 1- Battalion Storage Building; 1 – Motor Pool; 1- POL Storage Building; 1- Solid Waste Collection Point. See Appendix A for drawings.

2.11 EMBEDDED TRAINING TEAM COMPOUND (ETTC) FACILITES:
Near center of Brigade provide ETTC consisting of stone force protection wall with two separate 2400 mm steel gates, parking for 200 vehicles and a guard tower at each corner, all utilities water, sewer, and electricity shall be connected to base utilities. Provide electric wall mounted split-pack heat pump units for these facilities.

2.11.1 ETTC Facilities: All buildings shall be constructed of reinforced insulated concrete plastered walls, with K – Span roofs. Windows shall be 6 mm laminated glazing set in heavy duty aluminum frames. Barracks and toilet facilities shall be built separately for men and women (80% Men and 20% Women). Provide Barracks with double loaded corridors built to the following space requirements. Sleeping rooms for ten (10) Officers @15 m^2 net per sleeping area, one-hundred sixty-five (165) enlisted @ 7.5 m^2 net per sleeping area. Fifty (50) KBR personnel @ 7.5 m^2 net per sleeping area. Provide shower, sink and toilet facilities for 250 persons @ 1/10. Provide one (1) Moral, Welfare and Recreation (MWR) building @ 200 m^2. Provide Storage Building 100 m^2. The contractor shall construct the ETTC laundry facility to include utilities to support the installation of ten commercial washers, minimum 30 pounds capacity and ten commercial dryers. All ETTC facilities shall be provided with split pack heat pump units, for air conditioning/heating. Walk-off grates shall be provided at all exterior doors with removable galvanized steel grates and dirt wells, size full door width by one (1) meter long. Provide 1 collection point for solid waste temporary solid waste storage. Provide Master Plan and space for expansion in camp for a total population of 450 trainers.

2.11.2 DFAC Number 2: Facility shall be a western style kitchen for ETTC forces in the compound with commercial grade tables and commercial grade metal stackable chairs for 120 occupants. Stoves and ovens shall be commercial electric. Kitchen shall be sized to prepare food for 250 people. This facility shall provide cafeteria-style feeding and a short order grill next to a heated serving line w/sneeze guard 8 meter length min. Provide toilets, (2 separate) hand wash area with a stainless steel 2 meter pot sink, food service with all stainless fixtures and shelves and prep sinks/tables, dry storage, walk-in freezer, walk-in refrigerator, stainless self-serve counter, beverage counter, self-service cold-drink refrigerator w/sliding doors, and loading dock. Dining facility shall be 400 m^2 minimum. Provide an adequate grease trap with clean out to collect discharge from the kitchen area prior to discharging into the sewer system. Provide at front entry a concrete sidewalk and covered canopy to match roof. Design Drawing Package of this building shall be provided for construction to successful Contractor.

2.11.3 INTERPERTER FACILITES: Locate adjacent to the ETTC Facility. Provide separate compound consisting of stone force protection wall per Section 2.5 Force Protection Perimeter with two 2400 mm steel gates, all utilities water, sewer, and electricity shall be connected to base utilities. All floors in building shall be terrazzo, except utility type rooms and buildings. All buildings shall be constructed of reinforced fully grouted CMU with metal roofs. Provide Barracks with double loaded corridor built to the following space requirements; sleeping rooms for 50 Translators @ 7.5 m^2 net per sleeping area @ 6.0 m^2 minimum. Provide shower, sink and eastern toilet facilities for 50 persons @ 1/10 and a storage room for janitor supplies and mop sink. Provide one (1) Moral, Welfare and Recreation (MWR) Building @ 75 m^2. Provide 50 m^2 Office Space. Minimum. Walk-off grates shall be provided at all exterior doors with removable galvanized steel grates and dirt wells, size full door width by one (1) meter long. Provide electric wall mounted split-pack heat pump units for these facilities.

2.11.4 DFAC Number 3: Facility shall be a western style kitchen for ETTC Interpreters in the compound with commercial grade tables and commercial grade metal stackable chairs for 30 occupants. Stoves and ovens shall be commercial electric. This facility shall provide cafeteria-style feeding and a short-order grill next to heated serving line w/sneeze guard. Kitchen shall be sized to prepare food for 50 people. Provide two public toilets, hand wash area, food service with all stainless fixtures and shelves, dry storage, walk-in freezer, walk-in refrigerator, stainless self-serve counter and beverage counter, stainless steel prep sinks and wash pot sinks and, self-service cold-drink refrigerator w/sliding doors and loading dock. Dining facility shall be 120 m^2 minimum size. All Interpreter facilities shall have split-pack units, air-conditioning/heating. Provide an adequate grease trap with clean out to collect discharge from the kitchen area prior to discharging into the sewer system. Provide at front entry a concrete sidewalk and covered canopy to match roof. Design Drawing Package of this building shall be provided for construction to successful Contractor.

2.12 DINING FACILITY (DFAC NUMBER 1)
Supplement existing designs as required by RFP and construct a new Dining Facility (DFAC) 2,088 m^2 with 1512 m^2 Dining Room seating for 1,000 persons. Design shall be for an open-clear span facility (may have one row of columns in center of room), using insulated modular building construction with CMU walls 3 meters min A.F.F. All floors in building shall be terrazzo, except utility type rooms and buildings. Provide at front entry a concrete sidewalk and covered canopy to match roof construction, length 20 meters. The Training Building shall be located adjacent to of the DFAC with connecting canopy at door between for use during population surges. Exact layout will be confirmed at Design Charette. Walk-off grates shall be provided at all exterior doors with removable galvanized steel grates and dirt wells provide boot scraper for boot cleaning. Size grates full door width by one (1) meter long. Provide 3 flag poles at main entry. The Contractor shall design and construct one (1) collection point suitable for solid waste disposal temporary storage area adjacent to the DFAC. This building shall be Pre-engineered Metal Building with upper wall and roof constructed of insulated metal panels. The lower walls shall be reinforced insulated CMU. Design Drawing Package of this building shall be provided for construction to successful Contractor.

2.12.1 DINING FACILITY PROPANE STORAGE
Provide Propane Storage for four (4) weeks operation assuming all stoves are in operation at the highest fuel consumption rate. Provide full tanks when project is turned over to Client.

2.13 BRIGADE & GARRISON HEADQUARTERS COMPLEX BHC/GHC

Design and construct a combined Brigade & Garrison HQ. Capable of supporting 351 personnel. (93 Officers will Billet at the BOQ). Complex shall consist of the following buildings: 1 - “A” Type Barracks; 2 - “A” Type Barracks; 1- Toilet/Shower Building; 1- Brigade Headquarters Building w/toilets (552 m^2); 1- Garrison Headquarters Building, w/toilets 990 m^2 ; 1- Arms Storage Building; 1- BHC Motor Pool with POL Storage Building; 1- GHC Motor Pool with POL Storage Building; 1- Maintenance Garage (1395 m^2); 1- Refueling Point with 39,000 liters of diesel storage and 1,000 liters of MOGAS storage; 1- Solid Waste Collection Point; 6-Flagpoles. This will be finalized at the Charette.

2. 14 BACHELOR OFFICERS QUARTERS BOQ BUILDING All buildings shall be constructed of reinforced insulated concrete plastered walls, with K – Span roofs. Design and construct a Bachelor Officer Quarters complex with double loaded 1500 mm corridors built to the following space requirements. Provide housing for: (274) O1-O3 @ 14 m^2 double occupancy, with shared toilets; Shared toilets shall be grouped in one area on the corridor shall be constructed with a toilet/shower/sink ratio of 7:1 for O1-O3. Provide housing for: (35) O4-O5 @ 14 m^2 single occupancy, with shared toilets; Shared toilets grouped in one area on the corridor shall be

constructed with a toilet/shower/sink ratio of 4:1 for O4-O5. Provide housing for: (2) O6-O8 one bedroom apartments with living room, private bath and closets @ 52 m^2 single occupancy. Provide Diesel Heat w/Evaporative Cooling with ceiling fans. Provide a janitor room with a mop sink.

Sink ratio	1:10
Shower Ratio	1:8
Toilet Ratio	1:10
Ablution Area	1:10

2.15 REFUELING POINT
1- Refueling Point with 38,000 liters of diesel storage and 1,000 liters of MOGAS storage; complete with concrete containment floor and walls, power, and dispensing pumps.
Design Drawing Package of this facility shall be provided for construction to successful Contractor.

2.16 RECEPTION CENTER
Design shall be 200 mm reinforced concrete, as indicated on plans. Building shall have concrete slab with foundation below the frost line. Provide Eastern style toilets with wall- mounted vitreous china sink; furnish soap dispensers, paper towel dispensers, robe hooks and toilet paper holders. Provide a janitor room with a mop sink. Finish in toilets shall be terrazzo floors and ceramic tile walls. Provide Split Pack Heat Pump Units for entire building. All floors in building shall be terrazzo. Design Drawing Package of this building shall be provided for construction to successful Contractor.

2.17 COMMUNICATIONS BUILDING
Design and construct a Communications Building and wiring system. Design shall be 200 mm reinforced CMU, as indicated on plans. Building shall have concrete slab with foundation below the frost line. Provide toilets with wall-mounted vitreous china sink; furnish soap dispensers, paper towel dispensers, robe hooks and toilet paper holders. Provide a janitor room with a mop sink. Janitor room and any room(s) with water may not contain any electrical panel boards, circuit breakers, UPS system, or communications equipment. Floor in Communication Equipment Room shall be raised floor. See Section 4.9 below and 01015 paragraphs 10 thru 10.3.2 for additional details and requirements. Provide HVAC system for entire building. Walls: Concrete walls below grade shall be waterproofed using a water stop, waterproofing adhered to concrete walls, with geo-cloth, gravel, and perforated drainage pipes sloped 2% to drain. Design Drawing Package of this building shall be provided for construction to successful Contractor.

2.18 MEDICAL CLINIC
Supplement existing design as required and construct a 900m2 medical clinic with similar layout per appendices. Clinic shall provide the following: Examination rooms, X-ray room, Film room, Eye exam, Orthopedic, Dental, Dental lab, Pharmacy, Medical records, Administration, Lobby/waiting, Conference, Offices, Electrical room, Medical storage, Emergency room, Laboratory, Toilets, Showers, Patient rooms, Patient Bay, Break room, Janitor closet with a mop sink and Storage area. All floors in building shall be terrazzo, except utility-type rooms or as required by UFC-4-510-01. Build using insulated modular construction; insulated prefabricated metal structure with CMU 3,000 mm A.F.F. Building shall have concrete slab with concrete foundation below the frost line. The structure will have a central ducted forced air HVAC system for the entire building. Medical clinic shall be constructed to the standards specified in UFC 4-510-01: Military Medical Facilities. Provide four (4) covered ambulance parking spaces using prefabricated metal building.
Design Drawing Package of this building shall be provided for construction to successful

Contractor.

2.19 FIRE STATION
Design and construct a 520 m^2 Fire Station. Design shall be for an open bay facility, insulated modular construction with 4-meter overhead doors. Open bays will be provided with exhaust fans for summer ventilation. Provide living quarters with Offices, Sleeping Areas, and Toilets together with a janitor room with a mop sink, Class Room, Living Room, Kitchen, and Dining Room. Entire building will be provided Diesel Heat w/Evaporative Cooling with A/C in the living areas. All floors in building shall be terrazzo, except garage and utility-type rooms. Modify plan and provide second exit at end of the corridor. Construct building using insulated prefabricated metal structure with CMU 2,000 mm A.F.F. Provide two bollards at each roll-up door jamb. Design Drawing Package of this building shall be provided for construction to successful Contractor.

2.20 HELIPAD
Design and construct an un-reinforced concrete helipad. The helipad shall be sited in accordance with safe minimum distances from all structures, and shall have an asphalt access road to the helipad. Design in accordance with UFC 3-260-02, Table 12-7 on recommended spacing of transverse contraction joints and pavement thickness. Maximum spacing shall not exceed 6 meters (20 ft). Helipad shall have an un-reinforced concrete landing surface with a 5 meter wide asphalt concrete apron on 4 sides of helipad, and shall be designed to accommodate a fully loaded CH-47 Chinook Helicopter. Design Drawing Package of this building shall be provided for construction to successful Contractor.

2.21 SPORTS FIELD
Construct Sports Field with reviewing stand and soccer field (standard 400 meter asphalt track). Provide heavy-duty aluminum bleachers (seating for 320) with 10" wide aluminum seats with non-skid surface. All aluminum planks shall be furnished with smooth finish end caps that install easily with self-tapping screws. Framework understructure is heavy-duty galvanized steel with front and rear cross braces to stabilize frame. Understructure is robotic welded and hot dipped galvanized. Anchor entire assembly to concrete a foundation. Design Drawing Package of this building shall be provided for construction to successful Contractor.

2.22 COMBAT SERVICES SUPPORT BATTALION CSS
Design and construct a Combat Services Support Battalion capable of supporting 496 personnel. (49 Officers will Billet at the BOQ). Complex shall consist of the following buildings: 3 - “A” Type Barracks; 1 - “B” Type Barracks; 1- Toilet/Shower Building; 1- Battalion Headquarters Building; w/Toilets; 1- Arms Storage Building; 1- Battalion Storage Building; 1 – Motor Pool; 1- POL Storage Building; 1- Solid Waste Collection Point. See Appendix A for drawings.

2.23 COMBAT SUPPORT BATTALION CS
Design and construct a Combat Services Support Battalion capable of supporting 352 personnel. (43 Officers will Billet at the BOQ). Complex shall consist of the following buildings: 2 - “A” Type Barracks; 2 - “B” Type Barracks; 1- Toilet/Shower Building; 1- Battalion Headquarters Building; w/Toilets; 1- Arms Storage Building; 1- Battalion Storage Building; 1 – Motor Pool; 1- POL Storage Building; 1- Solid Waste Collection Point. See Appendix A for drawings.

2.24 CENTRAL RECEIVING WAREHOUSE
Construct a Central Receiving Warehouse (1,520 m2) Designs shall be for open bay facilities, using insulated modular construction with 3 meter CMU walls. Provide Split Pack Heat Cool Unit in office with 52-inch ceiling fan. Provide two 5 meter X 5 meter high roll-up doors. Provide two bollards at each roll-up door jamb. Building type shall be Pre-Engineered metal building with reinforced CMU walls. Design Drawing Package of this building shall be provided for construction to successful Contractor.

2.25 TRAINING BUILDING
Design and construct a 1,202 m^2 Training Building. Training Building shall have an auditorium/gymnasium. Four (4) offices (10 m^2 each) shall be provided. Provide 11 Eastern style toilets and 6 sinks together with a janitor room with a mop sink. All toilets shall face north/south. Locate Training Building near the dining facility to accommodate surges in brigade population. Design shall be for an open-clear span facility, using insulated modular construction with CMU walls 3 meters min A.F.F. Building shall be heated and cooled using Diesel Heat w/Evaporative Cooling and minimum 52-inch ceiling fans. Building shall have 5-meter high unobstructed ceiling space. Reconfigure Appendix A Plan, turn toilets and office spaces, 90 degrees and relocate them to the end of building (away from Dining Facility), and keep the double doors. Building type shall be Pre-Engineered metal buildings with reinforced CMU walls. Design Drawing Package of this building shall be provided for construction to successful Contractor.

2.26 DPW SHOP BUILDING.
Supplement existing design as required and construct a DPW Shop Building 486 m^2.
Building shall have offices, toilet, break room, conference room, and shop with double roll up doors. The building will have Diesel Heat w/Evaporative Cooling. Drawing Package of this building shall be provided for construction to successful Contractor.

2.27 MORAL WELFARE RECREATION BUILDING MWR
Supplement existing designs as required and construct the following 900 m2 MWR Building: provide 3-meter clear ceiling height. The building will have Diesel Heat w/Evaporative Cooling. Building type shall be Pre-Engineered metal buildings with reinforced CMU walls. See Appendix A for layout.

2.28 DETENTION FACILITY
Provide and install Detention Facility for 10 detainees and office for 2 guards. Holding cells shall be designed for double occupancy with the following built in amenities:
Bunks attached to wall, eastern style toilets, shower, and lavatory. Entry shall be a sally port. Building shall be constructed with reinforced concrete floor, walls and ceiling, with a metal roof. Provide office space and Toilet with eastern style toilets, shower, lavatory, power, and comms for two guards. Provide lockers for four guards. All fixtures shall meet the current American Correction Association (ACA) standards. Design Drawing Package of this building shall be provided for construction to successful Contractor.

2.29 SOLID WASTE COLLECTION POINTS AND DISPOSAL SITE
Provide and install collection points for solid waste until it is picked up and removed to the landfill/burn site. Design and construct a landfill/burn site from base off the ASP or Range road. See Section 01015 for requirements.

2.30 PERMANENT ELECTRICAL POWER & DISTRIBUTION SYSTEM
Contractor to include the design and build of an incremental increase in the Permanent Power Plant, including Building, power distribution system, and bulk fuel storage capacity based on 4 week (30 days) full-load operation for the optional bid item capacity, with provision to accommodate fuel storage for future generators based on paragraph 1.2 future buildings. After testing generators, Contractor shall provide a full supply of fuel to the tanks at the time of turnover to the Government. Provide switch gear for future connection to local power. All the fuel tanks will be inside a concrete reinforced wall and water tight wall to contain any fuel spillage. The volume of the concrete reinforced wall shall be 110% of the fuel tank capacity and shall be 600 mm above top of fuel tank. Provide a 50 mm diameter drain pipe with a valve thru the wall to drain water that may have cumulated inside after a rain. Provide chain link fence and gates around entire fuel storage facility see Perimeter Fence Section 01015 paragraph 2.5.6 for construction. Provide heavy duty hasp and locks at all fuel storage tanks and openings to prevent theft. Design Drawing Package of this building shall be provided for construction to successful Contractor.

2.31 ANTI VEHICLE TRENCH
Provide an anti-vehicle trench (3 meters wide X 2 meters deep) around perimeter of Brigade and Ammo Supply Point. Ditch shall be adjacent to all force protection fences and walls. Ditch shall be 5 meters from perimeter fences and walls.

2.32 CONCRETE BUNKERS
Provide Concrete Bunkers though out compound; with seating for 1200 persons. Site and grade so water cannot stand inside bunkers. Provide 150 mm base course of gravel under sandbags. See Appendix A for layout.

2.33 ARMS STORAGE BUILDING
Construct Battalion Arms Storage Building (350 m^2). Design using reinforced fully grouted CMU walls and partitions with insulated metal gable, and roof construction. Install vented louver in each storage area with 30 mm security bars @ 150 mm O.C. Install split-pack heat pump unit in office. Provide wood racks for storing long arms. Provide two bollards at each roll-up door jamb. Design Drawing Package of this building shall be provided for construction to successful Contractor. See Appendix A for layout.

2.34 LAUNDRY BUILDING
Design and construct the Laundry Building (112 m^2). Design shall provide for 10 washers and 10 dryers single stack, provide folding table with storage shelves under table, and storage shelves along one end wall. Main entry door shall have a recessed entry with Dutch door. Washer and dryer shall be commercial grade. The building will have Diesel Heat w/Evaporative Cooling. Provide 52-inch ceiling fan. See Appendix A for layout.

2.35 AMMUNITION SUPPLY POINT (ASP)
Design and construct an Ammunition Supply Point for an ANA Infantry Brigade. Facility shall be 187 square meters (7.62 meters (25 feet) by 24.5 meters (80 feet)]. Munitions Storage Igloo Type A, per Army Standard Magazine STO 33 15 74. The ASP shall be located remotely from the Garrison 1500 meters, and will consequently require a perimeter fence with concertina wire and security lighting, one guard house, one guard tower that allows for visibility in all four directions. See Appendix A.

2.35.1 ASP Guard tower shall be provided in a position and of sufficient height to view entire facility and surrounding area. Construction of guard tower shall be 200 mm reinforced concrete. Guard tower shall be provided with general lighting and shall be fitted with a 360-degree omni-directional searchlight. Provide built-in counter with 2 file drawers and 1 pencil drawer. Duplex receptacles shall be provided as required for general use. Provide red lights inside the guard tower to maintain night vision. Access will be by stairs. Area immediately outside the vicinity of guard hut shall be provided with an all-weather non-slip surface and shall be graded to sufficiently drain away from the building. Building shall have a concrete slab with a foundation below the frost line. Facility shall be provided with general illumination, and Communication/Data and duplex receptacles. Provide wiring to Communication Building thru a loop to all towers and guard house with a redundant feed to Communication Building. Provide a minimum of two comm. jacks to each tower. Facility shall be provided with general lighting. Provide remote lever controlled 45 million candlepower 500 watt prison grade search light roof mounted on guard tower roof. Provide built in counter with 2 file drawers and pencil drawers (see comment above). Windows shall be 13 mm laminated glass in heavy duty steel frames that open out and up. Provide arm on each side to lock in open position and provide cam latch to lock window in closed position. Provide seals on doors and windows to make dust tight. Provide grate for boot cleaning. Entry doors to be bullet-resistant. Provide Split Pack Heat Pump Unit.

2.35. 2 ASP Guard House design shall be shall be 200 mm reinforced concrete, as indicated on plans. A general space (1500 mm X 1500 mm) shall be provided for one (1) guard within the Guard House. Windows shall be 13 mm laminated glass in heavy duty steel frames that open out and up. Provide arm on each side to lock in open position and provide cam latch to lock window

in closed position. Provide seals on doors and windows to make dust tight. All other spaces mentioned in standard design shall be provided elsewhere within the site. Areas immediately outside vicinity of guard hut shall be provided with an all-weather non-slip surface and shall be graded to sufficiently drain away from the building and pedestrian areas. Building shall have concrete slab with foundation below frost line. Facility shall be provided with general lighting and shall be fitted with a 360-degree omni directional searchlight, Provide red lights inside the guard house to maintain night vision. Communications/Data and duplex receptacles. Provide wiring to Communication Building thru a loop to all guard houses and guard tower with a redundant feed to Communication Building. Provide a minimum of two comm. jacks to each guars house. Provide built-in counter with 2 file drawers and 1 pencil drawer. Provide Split Pack Heat/Cool Unit. Area immediately outside the vicinity of guard house shall be lighted. Provide grate for boot cleaning. Entry doors to be bullet-resistant.

2.36 SOLID WASTE MANAGEMENT AND DISPOSAL

Provide and install collection points for solid waste until it is picked up and removed to the landfill/burn site.

2.36.1 Design and construct a landfill/burn site down wind from base off the ASP or Range road. Site shall be dug into hillside and lined with 1000 mm clay fill to prevent leachate from entering the ground water (size 90 meters X 40 meters X 3 meters deep.) Verify with the COR for exact location.

2.36.2 Design and construct 4 collection points for living quarters, 4 for administration buildings, one for each DFAC, the ETTC/IT compound, the medical clinic, all warehouses and maintenance facilities, suitable for solid waste temporary storage areas with a 2 meter high wall and metal roof, enclosure shall have two metal gates in a 2 meter opening. Storage area shall be 4 meters X 5 meters with reinforced concrete slab and CMU or stone walls and metal roof on metal trusses. Eve shall match typical buildings. The Contractor shall prepare design plans showing location of collection points. Indicate locations on site plan. Provide next to hard surface road and 25 meters from inhabited buildings.

2.36.3 Design and construct 1 collection point suitable for solid waste disposal temporary storage area adjacent to each DFAC with a 2 meter high wall and metal roof on metal trusses. Eve shall match typical building profiles. Enclosure shall have two metal gates in a 2 meter opening. Storage area shall be 4 meters X 5 meters with reinforced concrete slab and CMU w/plaster or stone walls. The Contractor shall prepare design plans showing location of collection point adjacent to DFAC. Provide next to hard surface road and 25 meters from DFAC.

2.36.4 Design and construct an Incinerator adjacent to medical clinic install downwind of clinic on a concrete foundation. Include UFGS Specification Section 118221 for Incinerator Medical Waste in Specification. Incinerator shall be designed, constructed and installed per this standard and specification. Include in Specifications and Design Analysis

3. **UNEXPLODED ORDNANCE (UXO)**

UXO REMOVAL AND CLEARANCE
The contractor is not responsible for the clearance or removal of mines and unexploded ordnance (UXO) from the site prior to the commencement of construction.

It is the responsibility of the Contractor to be aware of the risk of encountering UXO/mines and to take all actions necessary to assure a safe work area to perform the requirements of this contract. The Contractor assumes the risk of any and all personal injury, property damage or other liability arising out of or resulting from any Contractor action taken hereunder. The Contractor and its subcontractors may not handle, work with, move, transport, render safe, or disarm any UXO/mine, unless they have appropriate accreditations from the MAC.

If a UXO/mine is encountered during project construction, UXO/mine disposal shall be handled in accordance with Section 01015, Technical Requirements.

4. DESIGN GUIDE INFORMATION:

These design notes are intended to aid in preparation of design documents for new facilities and supplement the design of those facilities that have been previously constructed at other garrisons in Afghanistan.

4.1 UNIQUE SITE REQUIREMENTS:

4.1.1 The building design for shall provide insulation and exterior window shading techniques to reduce building heat loss and heat gain. Contractors shall include energy efficient heating and cooling solutions in design analysis.

4.1.3 All building with water supply shall have a water meter and shut off valve installed in a locked cabinet or closet area inside the building.

4.1.4 All building that are not K-Span shall have a sloped metal roof, with metal eves, and soffits. See Section 01015 for roof specifications and warranty. All roof water run off from K-Span buildings shall have gutters and downspouts. All buildings with sloped metal roofs shall have gutters and downspouts. No water shall drain across walkways, stairs etc.

4.1.3 All building shall have finish floor set 150 mm above adjacent finish grade. Finish grade shall slope away from building 5% for three meters. All downspouts shall terminate at a splash block that diverts water 1000 mm away from building.

4.2 Barracks, Office, and Other habitable Buildings

The following notes shall be incorporated into the Barracks and Headquarters designs:

Barracks, HQ Building complexes and all habitable building shall be designed to accomplish the following:

a. Barracks shall be spaced far enough apart to minimize noise (minimum 15 meters between barracks). The spacing shall also be suitable for snow removal at entrances, where applicable, and allowing for green space (trees and scrubs) for all sites.

B.Barracks complexes shall be arranged to allow for common area (central plaza) for Battalion/Headquarters assembly.

c. Heating and cooling for all habitable buildings larger than 250 square meters shall be by forced-air diesel-fired furnaces; and cooling by an integral evaporative-cooler. At least one Heat-Cool Unit for each separate structure, with multi Units for larger buildings.

d. All habitable buildings shall be thermally insulated to R13 for walls and R 38 for roof.

e. All Barracks buildings shall be designed as open bay structures, sized for 5 square meters gross per soldier. Barracks buildings will be heated by forced-air diesel-fired furnaces; and cooling by an integral evaporative-cooler. Full height non-load bearing partitions shall be provided between the Enlisted and NCO billeting, as shown on the drawing. E9's and E8's shall have private rooms at 12 m2 net. E7's shall be double occupancy within 12 m2 rooms. All E1 – E6's shall sleep in open bays.

f. All barracks shall be of the standard size shown in the drawings.

g. All Barracks and building lighting shall be designed and constructed to provide a uniform level of minimum lighting in accordance with Section 01015 throughout the buildings. Fluorescent lighting shall be installed throughout barracks buildings.

h. Each Brigade Headquarters, Garrison Headquarters and Infantry Battalion Complex shall have a central toilet/shower facility with showers, toilets, and ablution/sinks, to be designed and constructed in each of the Complex-areas**.** The central toilet/shower facilities shall be sized to fit each complex see Paragraph i below for ratio, (see attached sketch as a guide only, sizes will vary) with a central changing area, open lockers, private bathing/showers, ablution, and toilets. The central toilet/shower facilities shall be designed with toilets facing North/South away from Mecca, for cultural reasons. Do not provide urinals for cultural reasons. Provide one central toilet/shower facility in each complex area as a separate stand alone building (not attached to a barracks building).

i. Provide the following Toilet/Shower/Sink Ratios for the facilities unless other wise noted (U.O.N)

Sink ratio	1:20
Shower Ratio	1:12
Toilet Ratio	1:20
Ablution Area	1:20

j. All toilets shall be eastern style with a wall-mounted faucet and spray hose. Toilets shall be oriented on the north-south axis. The flush tank shall be provided with heavy duty push type button capable of withstanding abuse.

k. Ablution areas shall contain hot and cold water spigots with a flexible 1.5m spray hose mounted below the control valves with a back flow prevented fitting at the hose bib and hanger. Ablution areas shall be provided with low flow water devices.

l. All sinks for the Brigade, Garrison, and Battalion HQ buildings and the central toilet/shower facilities shall be 1.8m wide trough type constructed poured in place with ceramic tile exterior and stainless steel lining capable of withstanding abuse. Maximum width is 1.8m. Individual troughs shall serve only three (3) individuals with 3 spigots with hot and cold water and two drains.

m. Reversible 3-speed motor ceiling fans (minimum 52-inch blades) shall be designed and installed for barracks areas, one- and two-man bedrooms, dining rooms, supply and storage areas, classrooms and offices.

n. Clothes lines, 1 each, shall be installed behind each barracks approximately 5 meters in length with 4 lines across, spaced 41 cm apart and of sufficient strength to prevent sagging when all of the lines are loaded. Use metal “T” post with non-rust type clothes lines.

o. Showers shall contain a valve for hot and cold water mixing. There shall be a swivel type showerhead mounted on the wall. The showerhead and the spigot shall each have a valve so that flow can be diverted to each. Showers shall be provided with low flow water devices.

p. Provide at all Buildings with swinging doors: Walk-off grates shall be provided at all exterior doors with removable galvanized steel grates and dirt wells, size full door width by one (1) meter long. Provide a 150 mm wide steel boot scraper fixed in concrete to the side of each door for boot cleaning.

q. Install carbon monoxide (CO) monitors in large occupancy areas, sleeping areas and enclosed facilities. If all the windows and doors are closed and there is no provision for intake air, there is a

possibility of carbon monoxide built up in the rooms. These CO monitors/alarms shall be hard-wired for reliability and to prevent pilferage.

r. All toilet rooms shall be designed with toilet fixtures facing North/South away from Mecca, for cultural reasons. Do not provide urinals for cultural reasons.

4.3 SITE

a. Install crushed #2 stone around all buildings 1,200 mm wide from building edge. Layout a system of paths between building and install 1,200 mm by wide crushed stone paths to reduce erosion and provide dust control.

b. Barracks shall be located no closer than 15 meters to each other.

c. Install 10 meter tapered metal flagpoles with bases constructed or 600 mm reinforced concrete; imbed 2000 mm, with s.s. pulleys top and bottom w/10 mm nylon line and 100 mm ball on top. Provide base hinge to tilt pole for maintance.

4.4 Warehouse Facilities

Construct Battalion Storage Building and Central Receiving warehouse facilities will be unheated except for offices. Design shall be for open bay facilities, provide 3 meter CMU walls and pre-engineered insulated building. Provide Split Pack Heat Pump Unit in office with 52-inch ceiling fan. Provide two 5 meter X 5 meter high roll-up doors. Building shall have 5 meter high unobstructed space. Provide two bollards at each roll-up door jamb. For full height chain link partitions. Building type shall be Pre-Engineered metal buildings with reinforced CMU walls. See Appendix A for layout.

Battalion Storage Buildings	800 m^2
Central Receiving Warehouse	1,520 m^2

4.5 Motor Pool Parking Areas

The following minimum space requirements shall apply to the motor pool parking areas:

Infantry Battalion Motor Pools	2,000 m^2
CSS Company Motor Pool	1,000 m^2
CS Company Motor Pool	1,000 m^2
Garrison Motor Pool	15,600 m^2
Brigade Motor Pool	1,500 m^2

4.6 Motor Pool and Vehicle Maintenance Facilities
The Motor Pool and Vehicle Maintenance facilities open areas will be heated by forced-air diesel-fired furnaces; and cooling by an integral evaporative-cooler Offices spaces shall have split unit HVAC heat pumps with both heating and cooling and 52-inch ceiling fans.

The following requirements shall apply to the motor pool and vehicle maintenance facilities:

a. Garrison, CS, and CSS Company Maintenance Building, Provide dutch doors at all tool rooms with lock for both halves. Provide Diesel Heat w/Evaporative cooling each building. Brigade Motor Pool, and Garrison Motor Pool – Each Motor Pool shall have a small 5 m x 5 m building with two separate rooms for storage of vehicle fluids and tools. Provide two bollards at each roll-up door jamb. All floors in building shall be sealed concrete.

b. Garrison Motor Pool – The Garrison Motor Pool Area shall have a refueling point with storage capacity of 38,000 liters diesel in two tanks, and 1,000 liters of MOGAS with underground storage.

c. Maintenance Garages – 1,395 m^2 Maintenance Garages shall be provided at the Garrison area. These garages shall contain 9 drive-through maintenance bays with overhead doors (5mx4m) at both ends of each bay as well as 5 meter concrete apron. The maintenance buildings shall have storage areas, office areas and tool rooms. Provide pits w/steps in 2 bays, on each side. They will have a 2-ton and 10-ton overhead bridge crane that can traverse the entire length of all maintenance bays. One each welding hood tailpipe CO exhaust system with hose reel and waste oil collection system to be provided for each of the two sides of the maintenance garage. The CS and CSS Company Maintenance Building shall be a similar floor plan with a reduced building size. CS and CSS Maintenance garage will have 3 drive-through maintenance bays with one two ton crane. Provide pits w/steps. Maintenance garages shall include exhausted battery storage/maintenance rooms in the garage. Provide two bollards at each roll-up door jamb. Reference the drawings attached.

d. POL storage buildings, minimum size 25 m^2. Each POL storage building shall have two rooms.

4.7 Brigade Headquarters Buildings

The designs for the following buildings should consider co-location of the Brigade and HQ buildings and should take into consideration the future expansion of the HQ building.

The following space requirements shall apply to the Brigade Headquarters Buildings:

Brigade Headquarters Building

Type of Space	Quantity	Area(m^2)	Total(m^2)
Open Office Spaces	N/A	351	351
Private Office	2	10	20
Private Office	7	14	98
Private Office	1	15	15
Private Office	1	28	28
Conference Room	1	40	40
Total Office Space			552

4.9 Installation Communication Systems

This facility will serve as the installation's center for telecommunications, switching, and automation networking (including internet service). See 01015, section 10.

4.10 Foundations

All building shall have reinforced concrete slab with reinforced concrete foundation 800 mm minimum or below the frost line.

4.11 Prime Power Plant Fuel

The prime power plant shall include bulk fuel storage capacity based on four weeks full-load operation for current capacity on design with provision to accommodate fuel storage for 2 additional generators. Provide refueling point adjacent to exterior stone wall and near a guard tower so tanker truck does not have to enter the Base. Provide a road with truck turn-around at fueling point.

PART 2 – COMPLETION OF WORK

All work under this contract shall be completed and buildings ready for beneficial occupancy in

accordance with the following schedule:

2.1 Site Survey/Master Planning	30 days

Work Items to be completed no later than 30 calendar days after Task Order award:

2.7 Force Protection Enclosure	150 days

Work Items to be completed no later than 150 calendar days after Task Order award:

2.2 Site Grading, Road Network, and Storm Water Runoff	210 days
2.3 Sewage Treatment Plant	210 days
2.5 Permanent Electrical Power & Distribution (Base Bid Buildings)	210 days
2.6 Water System	210 days

Work Items to be completed no later than 210 calendar days after Task Order award:

2.8 Infantry Battalion Complex (1)	240 days
2.9 Infantry Battalion Complex (2)	240 days
2.10 Infantry Battalion Complex (3)	240 days
2.11 Embedded Training Team Compound	240 days

Work Items to be completed no later than 240 calendar days after Task Order award:

Work Items to be completed no later than 180 calendar days after exercise/award of OPTION items:

Work Item	Completion Dates-Days from Award of Options
2.18 Medical Clinic	180 days
2.19 Fire Station	180 days
2.20 Helipad	180 days
2.21 Sports Field	180 days
2.22 Combat Services Support Complex CSS	180 days
2.23 Combat Support Battalion Complex CS	180 days
2.24 Central Receiving Warehouse	180 days
2.25 Training Building	180 days
2.26 DPW Shop Building	180 days
2.27 Community Center (MWR)ZX	180 days
2.28 Detention Center	180 days
2.29 Solid Waste	180 days
2.31 Anti Vehicle Trench	180 days
2.32 Concrete Bunkers	180 days
2.33 Arms Storage Building	180 days
2.34 Laundry Building	180 days
2.35 Ammo Supply Point (ASP)	180 days
2.36 Solid Waste Management and Disposal	180 days

Work Items to be completed no later than 240 calendar days after exercise/award of OPTION

2.12 DFAC NO 1	240 days from award of option
2.13 Brigade & Garrison HQ Complex BHC/GHC	240 days from award of option
2.14 Bachelor Officers Quarters BOQ	240 days from award of option
2.15 Refueling Point	240 days from award of option
2.16 Reception Center	240 Days from award of option
2.17 Communications Building	240 days from award of option

items:

2.1 Liquidated Damages: The Government reserves the right to exercise one, all or none of the optional items shown in the Proposal Schedule. Liquidated damages for the amount of $ 6,408.69 will be assessed for each day of delay over and beyond the pre-determined performance period for the base contract. Liquidated damages for the amount of $ 970.00 will be assessed for each day of delay over and beyond the pre-determined performance period for each completion date for each optional line item.

PART 3 – EXECUTION

3.1 SCHEDULE

Review Section 00150 for Schedule requirements. The development of the master plan and conceptual plans will include participation in a 2 to 5-day Planning Charette meeting at the 10% to 15% design effort in Kabul to finalize design. The Charette shall consist of the Customer, Contractor, Design Team and U.S. Army Corps of Engineers personnel to finalize design Completion of construction documents for 100%, after approval of a preliminary facility layout and landscape plan, the Contractor may commence Site Work. Any Options to be awarded shall be awarded no later than 360 calendar days after the Notice to Proceed (NTP). Contractor will prosecute the work diligently, and complete the entire work, ready for use, See Table 1.1 for completion dates for individual buildings and groups of buildings. The time stated for completion shall include final cleanup of the premises. The Contractor shall survey site and verify the

existing conditions and report to the Contracting Officer any interface problems that could potentially impact this work. The Contractor shall be responsible for submittals and developing and performing all operational and acceptance testing. Contractor shall construct the facilities as a Design-Build construction contract and shall be in accordance with all codes, regulations, and requirements outlined in this Request for Proposal (RFP).

3.2 All primary construction facilities, such as, barracks, heat plant, all headquarters buildings, MWR, DFAC, DPW, Training Center, and Community Center facilities will display both the flag of the Peoples Islamic Republic of Afghanistan and the United States of America.

EXAMPLE: MARKING (NOT TO SCALE)

از طرف دولت امـــــریکا
برای مـــردم افغانـــستان

From the People of the United States
to the People of Afghanistan

End of Section

SECTION 01015

TECHNICAL REQUIREMENTS

1. GENERAL

1.1 The Contractor's design and construction must comply with technical requirements contained herein. The Contractor shall provide design and construction using the best blend of cost, construction efficiency, system durability, ease of maintenance and environmental compatibility.

1.2 These design and product requirements are minimum requirements. The Contractor is encouraged to propose alternate design or products (equipment and material) that are more commonly used in the region; will be equally or more cost effective or allow for more timely completion, but furnish the same system durability, ease of maintenance and environmental compatibility. The Contractor will be required to submit information as requested by the Contracting Officer to make a comparison of the proposed alternate. All variations must be approved by the Contracting Officer.

1.3 ASBESTOS CONTAINING MATERIALS

Asbestos containing material (ACM) shall not be used in the design and construction of this project. Submission of material data sheets with non-ACM material is required. If no other material is available which will perform the required function or where the use of other material would be cost prohibitive, a waiver for the use of asbestos containing materials must be obtained from the Contracting Officer.

1.4 SAFETY

1.4.1 Unexploded Ordnance (UXO). Conducted by others.

1.4.1.1 UXO/Mine Discovery During Project Construction

It is the responsibility of the Contractor to be aware of the risk of encountering UXO and to take all actions necessary to assure a safe work area to perform the requirements of this contract. If during construction, the contractor becomes aware of or encounters UXO or potential UXO, the contractor shall immediately stop work at the site of encounter, move to a safe location, notify the COR, and mitigate any delays to scheduled or unscheduled contract work. Once the contractor has informed the COR, the contractor will await further direction. The Contractor assumes the risk of any and all personal injury, property damage or other liability arising out of or resulting from any Contractor action taken hereunder.

Scrap metal shall be the property of the Host Government. The scrap metal on site shall be moved to an area away from the site perimeter as directed by the Contracting Officer’s Representative and left for the Host Government to remove and/or salvage.

NOTE: For previous UXO/mine information, the following points of contact from the UN Mine Action Center of Afghanistan are provided:

Mohammad Sediq, Chief of Operations,
Email: sediq@unmaca.org
Cell: +93 070 295207

Hansie Heymans, Chief Information Officer,
Email: hansie@unmaca.org
Cell: +93 070 294286

1.4.1.1 Explosives Safety

1.4.1.1.1 General Safety Considerations

General safety considerations applicable to personnel, both essential and non-essential, at project sites where UXO may be encountered include:

a. Do not carry fire or spark-producing devices.
b. Do not conduct explosive or explosive-related operations without approved procedures and proper supervision and UXO safety support.
c. Do not become careless by reason of familiarity with UXO or the reported probability level of UXO contamination.
d. Do not conduct explosive or potentially explosive operations during inclement weather.
e. Avoid contact with UXO except during UXO clearance operations.
f. Conduct UXO-related operations during daylight hours only.
g. Employ the "buddy system" at all times.

1.4.1.1.2 Activity Hazard Analysis (AHA) briefings

a. Activity Hazard Analysis's shall be prepared in accordance with the Corps of Engineers Safety and Health Requirements Manual, EM 385-1-1.
b. Hazard analyses will be prepared and briefed by personnel that are knowledgeable in UXO and explosives safety standards and requirements. These personnel should understand the specific operational requirement and hazard analysis methodologies. A hazard analysis will be performed for each activity to determine the significance of any potential explosive-related hazards. Explosive residues may be discovered or exposed during UXO operations in the form of powder or various granular and powder based pellets. These contaminants can enter the body through the skin or by ingestion if proper personal hygiene practices are not followed. Explosive fillers such as white phosphorus are dangerously reactive in air and acute exposure can result in serious injury to the skin, eyes, and mucous membranes. They are also a fire hazard.

Safety requirements (or alternatives) that will either eliminate the identified hazards, mitigate or control them to reduce the associated risks to an acceptable level will be developed. The adequacy of the operational and support procedures that will be implemented to eliminate, control, or abate identified hazards or risks will then be evaluated and a second risk assessment completed to verify that a satisfactory safety level has been achieved.

1.4.1.2 Notification of Noncompliance

The Contracting Officer will notify the Contractor of any detected noncompliance with the foregoing requirements. The Contractor shall take immediate corrective action after receipt of such notice. Such notice, when delivered to the Contractor at the work site, shall be deemed sufficient for the purpose of notification. If the Contractor fails or refuses to comply promptly, the Contracting Officer may issue an order stopping all or part of the work until satisfactory corrective action has been taken. The Contractor shall make no part of the time lost due to such stop orders the subject of claim for extension of time or for excess costs or damages.

1.5 LIMITATION OF WORKING SPACE

The Contractor shall, except where required for service connections or other special reason(s) confine his operations strictly within the boundaries of the site. Workmen will not be permitted to trespass on adjoining property. Any operations or use of space outside the boundaries of the site shall be by arrangement with all interested parties. It must be emphasized that the Contractor

must take all practical steps to prevent his workmen from entering adjoining property and in the event of trespass occurring the Contractor will be held entirely responsible.

Areas located immediately outside the construction area are known to contain mines and unexploded ordnance (UXO). Contractors assume all risks when venturing in or out of the designated work area.

1.6 TEMPORARY STRUCTURES

The Contractor shall erect suitable temporary fences, lighting, and necessary structures to safeguard the site, materials and plant against damage or theft and for the protection of the general public and shall adequately maintain the same throughout the course of the contract.

1.7 SUBCONTRACTORS

Compliance with the provisions of this section by subcontractors will be the responsibility of the contractor.

1.8 LIST OF CODES AND TECHNICAL CRITERIA:

The following codes and technical criteria and those referenced therein shall be required for this project. References within each reference below shall be required and adhered to. This list is not exhaustive and is not necessarily complete.

AABC - Associated Air Balance Council (National Standards for total System Balance)
ACI 318 Building Code Requirements for Structural Concrete (latest edition), American Concrete Institute
Air Force Manual 32-1071, Security Engineering, volumes 1-4, 1 May 1994
American Water Works Association, ANSI/AWWA C651-99 standard
ARI - Air Conditioning and Refrigeration Institute
ASCE 7-02, Minimum Design Loads for Buildings and Other Structures, 2002
ASHRAE - American Society of Heating, Refrigeration and Air-Conditioning Engineers
ASHRAE Standard 55-2004, Thermal Environmental Conditions for Human Occupancy
ASHRAE Standard 62.1-2004, Ventilation for Acceptable Indoor Air Quality
ASHRAE Standard 62.2-2004, Ventilation and Acceptable Indoor Air Quality for Low-Rise Residential
ASHRAE Standard 90.1-2001, Energy Standard for Buildings Except Low-Rise Residential Buildings
ASHRAE Standard 90.2-2004 with 2006 supplement, Energy-Efficient Design of Low-Rise Residential Buildings
ASME - American Society for Mechanical Engineering
ASTM - American Society for Testing and Materials
AWS - American Welding Society
DCID 6/9 Physical Security Standards for Sensitive Compartmented Information Facilities
DCID 1/21, Manual for Physical Security Standards For Sensitive Compartmented Information Facilities (SCIF).
EIA ANSI/TIA/EIA-607: (1994) Commercial Building Grounding/Bonding Requirement Standard.
Factory Mutual (FM) Approval Guide-Fire Protection (2002).
IBC - International Building Codes, 2003 (and its referenced codes including those inset below)
  IFGC – International Fuel Gas Code
  IMC – International Mechanical Code
  IPC – International Plumbing Code
Lighting Handbook, IESNA, latest edition
MIL-HDBK-1190, Facility Planning and Design Guide

Codes and Standards of the National Fire Protection Association (NFPA)
[as applicable and enacted in 2002 or later, unless otherwise noted].
National Electrical Safety Code (NESC), Institute of Electrical and Electronic Engineers (IEEE C2), 2002 edition
NFPA 10, Portable Fire Extinguishers, 2002 edition
NFPA 54, National Fuel Gas Code, 2002
NFPA 58, Liquefied Petroleum Gas Code, 2004
NFPA 70, National Electrical Code, 2002 edition
NFPA 72, National Fire Alarm Code, 2002 edition
NFPA 75, Standard for the Protection of Information Technology Equipment
NFPA 90A, Air Conditioning and Ventilating Systems, 2002 edition
NFPA 101, Life Safety Code, 2003 edition
NFPA 110, Standard for Emergency and Standby Power Systems, 2005 edition
Plumbing and Drainage Institute (PDI-WH-201) water hammer arrestors
SMACNA - Sheet Metal and Air Conditioning Contractors' National Association, Standards and Guides, latest editions
International Mine Action Standards, latest edition; (see http://www.mineactionstandards.org for copy of standards)
TM 5-785 Weather Data
TM 5-802-1 Economic Studies
TM 5-805-4 Noise and Vibration
UFC 1-200-01, Design: General Building Requirements, 20 June 2005
UFC 1-300-07A Design Build Technical Requirements
UFC 3-230-03a, Water Supply, 16 Jan 2004
UFC 3-230-04a, Water Distribution, 16 Jan 2004
UFC 3-230-06a, Subsurface Drainage, 16 Jan 2004
UFC 3-230-07a, Water Supply: Sources and General Considerations, 16 Jan 2004
UFC 3-230-08a, Water Supply: Water Treatment, 16 Jan 2004
UFC 3-230-09a, Water Supply: Water Storage, 16 Jan 2004
UFC 3-230-10a, Water Supply: Water Distribution, 16 Jan 2004
UFC 3-230-13a, Water Supply: Pumping Stations, 16 Jan 2004
UFC 3-230-17FA, Drainage in Areas Other than Airfields, 16 Jan 2004
UFC 3-240-09FA previous document TM 5-814-3/AFM 88, Vol 3 Domestic Wastewater Treatment
UFC 3-240-06A Wastewater Collection and Pumping
UFC-24—07FA Sanitary and Industrial Wastewater Collection: Gravity Sewers and Appurtenances
UFC 3-240-04a, Wastewater Collection, 16 Jan 2004
UFC 3-260-01, Airfield and Heliport Planning and Design, 1 Nov 2001 with changes dated 19 May 2006
UFC 3-260-02, Pavement Design for Airfields, 30 June 2001
UFC 1-300-09N, Design Procedures, 25 May 2005
UFC 3-400-01, Design: Energy Conservation, 5 July 2002
UFC 3-410-01FA Heating, Ventilating and Air Conditioning, Change 1, 15 May 2003
UFC 3-410-02A, HVAC Control Systems. 15 May 2003
UFC 3-430-01FA, Heating and Cooling Distribution Systems, 27 Jy 2003
UFC 3-501-03N, Electrical Engineering Preliminary Considerations, 16 Jan 2004
UFC 3-520-01, Interior Electrical Systems, 10 June 2002
UFC 3-530-01AN, Design: Interior and Exterior Lighting and Controls, 19 Aug 2005
UFC 3-540-04N Design: Diesel Electric Generating Plants, 16 Jan 2004
UFC 3-550-03FA Design: Electrical Power Supply and Distribution Systems, 1 Mar 2005
UFC 3-600-01, Design: Fire Protection Engineering for Facilities, 26 Sept 2006
UFC 4-010-01, Design: Minimum DoD Antiterrorism Standards for Buildings, 22 Jan 2007
UFC 4-010-02, DoD Minimum Antiterrorism Standoff Distances for Buildings, 19 Jan 2007
UFC 4-020-01FA, Security Engineering: Project Development, 1 Mar 2005
UFC 4-020-02FA, Security Engineering: Concept Design, 1 Mar 2005

UFC 4-020-03FA, Security Engineering: Final Design, 1 Mar 2005
UFC 4-020-04FA, Electronic Security Systems: Security Engineering, 1 Mar 2005
UFC 4-021-01, Design and O&M: Mass Notification Systems, draft 1 May 2006
Underwriters' Laboratories (UL) Fire Protection Equipment Directory (2002)
UL Standards (as applicable)
UL 710, Exhaust Hood for Commercial Cooking Equipment, latest edition
UL 737, Fireplace Stoves, latest edition
UL 752, Bullet Resisting Equipment, 2000 or later
USCINCCENT OPORD 97-1

The publications to be taken into consideration shall be those of the most recent editions. Standards other than those mentioned above may be accepted if the standards chosen are internationally recognized and meet the minimum requirements of the specified standards. The Contractor shall be prepared to submit proof of this if requested by the Contracting Officer.

2. SITE DEVELOPMENT:

2.1 GENERAL

The project includes furnishing all materials, equipment and labor for constructing water, sanitary sewer and storm sewer service lines, as applicable, and connecting to the existing sewer networks.

2.2 ENVIRONMENTAL PROTECTION

2.2.1 Applicable regulations

The Contractor shall comply with all Host Nation laws, rules, regulations or standards concerning environmental pollution control and abatement with regard to discharge of liquid waste into natural streams or manmade channels. The contractor shall review host nation and U.S. Government environmental regulations with the contracting officer prior to design and discharge of any liquid wastes into natural streams or manmade channels.

2.2.2 Notification

The Contracting Officer will notify the Contractor in writing of any observed non-compliance with the foregoing provisions. The Contractor shall immediately take corrective action. If the Contractor fails or refuses to promptly take corrective action, the Contracting Officer may issue an order stopping all or part of the work until satisfactory corrective action has been taken. No extension of time or damages will be awarded to the Contractor unless it was later determined that the Contractor was in compliance.

2.2.3 Spillages

Measures shall be taken to prevent chemicals, fuels, oils, greases, bituminous materials, waste washings, herbicides and insecticides, and construction materials from polluting the construction site and surrounding area.

2.2.4 Disposal

Disposal of any materials, wastes, effluents, trash, garbage, oil, grease, chemicals, etc., shall be taken to a dumpsite off site and subject to the approval of the Contracting Officer. Burning at the project site for the disposal of refuse and debris will not be permitted.

2.3 CIVIL SITE DEVELOP\MENT

2.3.1 SITE PLAN

The contractor shall locate the facilities in general agreement with the drawings included and any requirements in the Scope of Work 01010. All buildings, roads, parking areas, entry control points, guard towers, wall, fence, utility structures, and other site features shall be clearly defined and dimensioned on the site plan. Buildings shall be located to provide access for emergency vehicles and fire fighting. Roads and parking areas shall be designed for turning radius of the largest vehicle entering the compound.

Assume survey mapping and detailed topographical maps are not obtainable. If existing and will be used, the accuracy shall be verified. Assume that there is no functioning infrastructure for water supply, pumping or distribution; no sanitary sewer collection system, lift stations or sewage treatment facility. Assume solid waste management and/or collection facilities are non-existent. Generally, limited investigation has been conducted to determine availability, previous usage, capacities or quality of water. For the project site, it is anticipated that the sole source of water will be Ground Water Wells (GWW) to be located on the site for Force Protection. Unless otherwise noted, raw water from on-site GWW sources shall not be considered acceptable for potable water use. The estimated water demand is 41 gallons per day per soldier, with the estimated total strength of 4,000 soldiers. Hence new water supply, pumping and distribution infrastructure will include: 1) A sufficient number of wells drilled into the best available aquifer in the vicinity of planned wells, installed with properly sized screen or slotted pipe, sand and gravel packs, etc., and fully developed for optimal yield, 2) Well pump(s), valves, flow meters, flow control devices, air and vacuum 3) Water transmission main to the proposed water distribution network planned to serve the battalions and support activities, 4) Water Storage Tank (minimum 1 day's storage) 5) Service booster pumps plus jockey (if necessary based on engineering site investigation) 6) Water disinfection (chlorination system). An entirely new sanitary sewer collection system shall be constructed to include: 1) aerated stabilization pond with effluent discharge pipe to an approved effluent pond 2) Sewage Lift Station (if necessary based on engineering site investigation) 3) complete sewage collection system, gravity sewer in service areas and force main as needed, 4) Building service connections

Design and construct the road network connecting main road or highway to the main entrance of the compound, all roads within the compound, to the ASP, and to the Ranges. All roads shall be graded and constructed with 300mm sub base course and surfaced with 100mm well graded, crushed aggregate. The minimum roadway width shall be 7 meters. The road network within the compound shall be asphalt surfaced, with 100 mm of asphalt. Road construction shall include the installation of all required drainage structures. See Appendix A.

All site plans and master plans shall be drawn in the following projection and datum for incorporation into the U.S. Army Corps of Engineers GIS system:

WGS 1984 UTM Zone 42 N

2.3.2 DEMOLITION

Demolition shall include removal of all structures, foundations, pavements, and utilities, and clear and grubbing. All refuse and debris shall be disposed of off site. Holes and depressions shall be backfilled. Fill materials shall be composed of satisfactory soils or aggregates defined in ASTM D 2487 as GW, GP, GM, SP, SM, SW, CL-ML. Minimum soil compaction shall be 95 percent of maximum density as defined in ASTM D 1557.

2.3.3 GRADING AND DRAINAGE

The contractor will provide all necessary site grading to insure adequate drainage so that no areas will be flooded due to a rainfall of a 10-year frequency. Drainage of the area should be

compatible with the existing terrain. Building floor elevation shall be a minimum 150mm above grade and slope away from the building on all sides at a minimum of 5% for 3 meters.

2.3.4 PAVING

2.3.4.1 Roads

Approximately four (4) kilometers of roads are required within the compound area and approximately 2 km of road to connect from the main entrance of the compound to the nearest main road or highway. All pre-existing conditions are undeveloped land with gentle slopes, without substantial vegetation and with natural drainage channels of moderate size and spacing that are dry most of the time. All roads shall be of wearing surface 7.3 meters wide with 1.5 meters shoulders, graded for proper drainage, provided with necessary drainage structures, drainage ditches and completed with prescribed surfaces in accordance with applicable sections of TM 5-822-2 and TM 5-822-5 standards. Provide road signs in the compound using universal language or symbols. Provide markings on the asphalt road. The compound (cantonment area) roads sections shall have compacted crushed aggregate base course with an asphalt topping and shall be provided with necessary drainage structures and completed with prescribed surfaces in accordance with applicable sections of TM 5-822-2 and TM 5-822-5 standards. Provide road to the ASP approximately 1500 meters, and a road to the Ranges these roads shall be constructed with 300mm sub base course and surfaced with 100mm well graded, crushed aggregate. Base course shall be compacted to 95% proctor density and mechanically stabilized by compaction. Degree of compaction shall be expressed as a percentage of the maximum density obtained by the test procedure presented in ASTM D 1557. Provide Base Parking per Section 01010, paragraph 4.5, surfaced with crushed stone per Section 01010 paragraph 4.3. Crushed stone shall also be provided around buildings and pathways. Contractor shall notify the Contracting Officer immediately if initial site survey determines that area hydrology requires major drainage structures or bridges (see Bridges). Also, the Contracting Officer shall be immediately notified if the required lengths of road or preexisting conditions are determined to be substantially or materially different than the above-described conditions/estimates.

2.3.4.2 Bridges and Site Grading Plan

Preliminary investigation indicates no need for bridges or major drainage structures. The Contractor shall notify the Contracting Officer immediately if initial site survey determines that area hydrology requires major drainage structures or bridges. The contractor shall design a site grading plan that provides positive drainage and minimizes the requirement for major structures in a cost effective manner.

2.3.4.3 Parking Areas and Motor Pools

Contractor shall construct parking and storage areas using aggregate surface. Sub grade shall be 150mm (6 inches) minimum in depth scarified and compacted to 95% proctor density. Aggregate base shall be 150mm (6 inches). Aggregate Base Course (ABC) material must be well graded, durable aggregate uniformly moistened and mechanically stabilized by compaction. Degree of compaction shall be expressed as a percentage of the maximum density obtained by the test procedure presented in ASTM D 1557or equivalent DIN, BS, or EN standards.

2.3.5 Entry Control Point

2.3.5.1 Exterior Compound Wall

Design and construct a Force Protection Perimeter Stone Wall perimeter Fence per Scope of Work Section 01010 and RFP. All foundations shall extend below the frost line to frost depth (min 800 mm), top of wall shall be 2400 mm from finish grade to high point of concrete cap, and align

with top of chain link. Provide detail/elevation at fence indicating how fence will transition from level to slope and over ridges. The stone walls will need vertical reinforcing and horizontal reinforcing to resist wind and seismic loads. The vertical reinforcing must be adequately anchored or lapped into the wall footing. The footing must be sized to resist sliding and overturning from the design loads. Install outriggers and single-strand concertina wire on top of the wall. The walls shall measure at least 2500 mm high with a thickness of the walls not less than 600 mm.

2.3.5.2 Gates and Fence

Fence and gate fabric shall be No. 9 gage wires woven into a 50 mm diamond mesh. Fabric shall be coated with 366 grams per square meter zinc galvanizing. Posts shall be ASTM F 1083 Pipe, Steel, Hot Dipped Zinc Coated (Galvanized) Welded or equal. Post sizes shall be as shown on drawings.

The gates shall be swing type. Vehicle gates shall be a pair of 3.65 m wide x 2.4 m high leafs, constructed of a steel tube frame and steel tube intermediate posts and rails. Design and construct a Force Protection entry gates heavy steel frame, with decorative 6mm steel skin and matching man gate with view port. Gates shall swing from one meter square reinforced concrete columns covered with stone to match fence. Provide reinforced grade beam across gateway flush with pavement to lock gates with flush mounted vertical sliding bolts, bolts shall be 50 mm dia solid steel. The design of the gates shall insure that it is dimensionally stable, square, true and planar. Gate leafs shall not rack or deflect when installed on its hinges. Gates shall have a sufficient number of hinges to support each gate leaf. Provide a locking mechanism that holds the gates together when in the closed position as well as a drop bolt that engages a steel sleeve embedded in the pavement.

2.3.5.3 Reinforced Barbed Tape

Reinforced barbed tape shall be 600 mm diameter concertina style coil consisting of 31 loops. Each loop shall consist of 19 barb clusters per loop. Adjacent coils loops shall be alternately clipped together at three points about the circumference to produce the concertina effect upon deployment. Spacing between attachments points when deployed shall be 400 mm. The reinforced barbed tape shall be fabricated from 430 series stainless steel with hardness range of Rockwell (30N) 37-45 conforming to the requirements of ASTM A 176. Each barb shall be a minimum of 30.5 mm (1.2 inch) in length, in groups of 4, spaced on 102 mm (4 inch) centers. The stainless steel core wire shall have a 2.5 mm (0.098 inch) diameter with a minimum tensile strength of 895 MPa. Sixteen gauge stainless steel twistable wire ties shall be used for attaching the barbed tape to the barbed wire. The reinforced barbed tape shall be equivalent to NSN: 5660-01-457-9852.

2.3.5.4 Outriggers

Outrigger supporting arms shall be “Y” shaped with post securely embedded into the top of the wall. Posts shall conform to ASTM F 1083, Pipe, Steel, Hot Dipped Zinc Coated (Galvanized) Welded.

2.3.5.5 Vehicle Barriers

2.3.5.5.1 Active Barriers - Drop Arm Gates

The height of the beam shall be a minimum of 30 inches (750 mm) above finished grade. The crash beam must be capable of blocking a minimum road width of 4.0 meters. The crash beam shall be manually raised and lowered with less than 30 pounds of force. The end of the crash beam should include a locking pin with padlock acceptance for securing the beam when it is in the down position capable of stopping large (10,000 lb.) trucks, in addition to heavy duty steel

gates into the Brigade.
Additional active barriers shall be tire shredder type with manual latch down capability. Shredders shall extend the entire width of the roadway opening where installed.

2.3.5.5.2 Passive Barriers

Barriers shall be concrete blocks of one meter by one meter by one meter dimensions. Similar arrangements of large stones (one cubic meter size), jersey barriers or equal sized obstacles may be used.

2.3.6 CIVIL UTILITIES

2.3.6.1 General

The design of the water and sanitary systems shall be sized to provide flow and discharge based on a fixture unit basis. The design drawings shall show all utility lines, line sizes, valves, manholes, disinfection systems, and applicable details associated with water and sanitary system designs. Specifications covering water lines, valves, pumps, controls, sanitary sewers and storm sewers shall be submitted as part of the design and shall require standard materials that are available in-country. Contractor shall install and connect exterior sanitary sewer collection and water supply piping to service connection points of each facility requiring such.
Infrastructure design and construction shall be designed for a total population of 4,000 personnel.

2.3.6.2 Water

2.3.6.2.1 General Water

Infrastructure design and construction shall serve the demand. The Contractor shall install water distribution mains, branches, laterals, lines and service connections to include all pipe, valves, fittings and appurtenances. Exterior water line construction shall include service to all buildings as described in the Scope of Work Section 01010. Also reference the Overall Site Map attached to this document. The required Average Daily Demand (ADD) approximation is ultimately 620,000 liters (or 164,000 gallons) of potable water, derived from 155 liters per capita per day (lpcd) or 41 gallons per capita per day (gpcd). In the event potable or non-potable use water is required prior to completion of the water facilities infrastructure, the Contractor may be issued a Request for Proposal to provide non-potable (tank truck) and potable (bottled or other reliable source) consumption. Provide a minimum of one (1) freeze proof outside water hydrant (hose spigot) for each building. A minimum cover of 800 mm (2’-8”) will be required to protect the water lines against freezing.

Water Quality Sampling and Analysis

The Contractor shall perform water quality sampling and testing at the source. The Contractor shall utilize well-qualified and equipped testing capability in the project site area, if available. If professional testing services are not available in the area, the Contractor will submit an alternative practical testing source for approval. Raw water quality criteria for Water Quality and Criteria Standards, and shall address the following: PH, turbidity, conductivity, oxidation reduction potential, total dissolved solids, color, odor, total coliform/fecal coliform (bacteria) an indicator of the presence of E. coli. These baseline parameters are a partial list as presented in TM5-813-3/AFM 88-10 APPENDIX A.

2.3.6.2.2 Well House

At new wells or springs, construct a permanent well house with concrete slab floor. The floor of the well house shall slope away from the casing approximately 3 mm per 300 mm (1/8” per foot).

Floor of well house shall be above flood plain. The well house design should be such that the well pump, motor and drop pipe could be removed readily. The well house shall protect valves and pumping equipment plus provide freeze protection for the pump discharge piping beyond the check valve. The well house shall be insulated and a heating unit installed. The well shall be protected from unauthorized use by a security fence with lockable gate. Provide outriggers, barbed wire and concertina wire on fence and gate.

2.3.6.2.3 Raw Water Disinfection

Contractor shall perform disinfection of the well water in accordance with AWWA A 100 or equivalent. Bacteriological samples shall be collected and examined in accordance with Standard Methods for the Examination of Water and Wastewater by a qualified lab as approved by the Contracting Officer. A filtration system is required; its location, type and function to be determined by the contractor.

2.3.6.2.4 Service Booster Pumps (Direct Pressure System Pending Engineering Site Investigation)

Contractor shall provide a booster pump station with end suction or split case double suction horizontal split case (frame mounted) centrifugal pumps arranged in parallel for pumping water storage into the main distribution system. The pumps and controls shall be designed to supply and maintain acceptable system pressure throughout the distribution network given the full range of flow conditions (low flow to peak). For conditions of low demand and to prevent short cycling of primary pumps, provide a low demand jockey pump with capacity of one-third (1/3) of the Average Daily Demand (ADD). Each booster pump, two (2), shall be capable of delivering 2 times (2x) the ADD. Provide suitable expansion tank. The suction side of the service booster pumps shall have an eccentric reducer and gate valve installed. The discharge side shall have a gate valve, check valve between the pump and the gate valve and concentric reducer, pressure gage and air relief valve.

2.3.6.2.5 Water Storage Tank

Contractor shall provide a circular steel or circular concrete ground storage reservoir (GST) to be located on the ground surface. Volume of the GST shall be a minimum storage volume of a full days demand. The Contractor shall verify storage volume requirements based on final design population. The storage facility shall be located above drainage areas and locations subject to flooding as approved by the Contracting Officer. The storage facility shall be located on the higher elevations of the site to promote gravity flow and reduce pumping requirements. Overflow and air vents shall be screened so that birds, rodents and debris cannot enter the reservoir. Contractor shall provide a circular steel or circular concrete ground storage reservoir (GST) to be located on the ground surface. Volume of the GST shall be a minimum storage volume of a full days demand 620 m^3 (164,000 gal). The Contractor shall verify storage volume requirements based on final design population. The storage facility shall be located above drainage areas and locations subject to flooding as approved by the Contracting Officer. The storage facility shall be located on the highest elevations of the site to promote gravity flow and reduce pumping requirements. Overflow and air vents shall be screened so that birds, rodents and debris cannot enter the reservoir.

2.3.6.2.6 Disinfection & Chlorination System

Use hypochlorite compounds for disinfection. A hypo-chlorinator shall be used to feed a sodium hypochlorite solution of 5-15% available chlorine into the system. Hypochlorite compound may be a liquid or solid form. The hypo chlorination system shall consist of a chemical solution tank for hypochlorite, diaphragm-type pump, power supply, water pump, pressure switch and storage tank

(optional hydro-pneumatic/storage). The pump shall feed a hypochlorite solution in proportion to the water demand. The solution must be introduced to the water supply system after the filter to prevent its damage. The hypo-chlorinator shall have a pumping rate, liters per day (lpd) (gallons per day (gpd)) adequate to deliver 5 percent (%) available hypochlorite solution adjustable to the quantity of water being produced from the source. Dosage rate will vary somewhat depending on actual pump production rate and available residual chlorine in the system. Contractor shall determine the required dosage rate milligrams per liter (mg/l) to maintain the required chlorine residual (usually 0.2-0.2mg/l) in the distribution system. Chlorine solution tank shall be large enough to hold a three days supply of hypochlorite solution. A fresh solution shall be prepared every two or three days because the solution may lose its strength over time and this will affect the actual chlorine feed rate. The hypochlorite shall be stored in a cool dry place. Sodium hypochlorite can lose from two to four percent of its available chlorine content per month at room temperature. Contractor shall verify required minimum residual chlorine, and this shall also be verified and approved by the Contracting Officer. The chlorination system shall have the capability for manually adjusting the dosage rate and be installed in such a manner that the system can be easily disconnected and bypassed in the event of health safety or routine maintenance and repair. Disinfection of water mains shall be in accordance with AWWA standard C651-86 and disinfection of storage facilities in accordance with AWWA standard C652 86.

2.3.6.2.7 Chlorine Shelter

Contractor shall furnish a shelter as per chlorine manufacturer's installation requirements. The Contractor shall provide manufacturers catalog information and shop drawing to the Contracting Officer for approval.

2.3.6.3 Water Distribution System

2.3.6.3.1 General

The Contractor shall provide a water distribution system described as follows: Pipe diameters used in the network shall be 300mm (12 inch), 250mm (10 inch), 200mm (8 inch), 150mm (6 inch) and 100mm (4 inch), as calculated, using ductile iron (DI) conforming to AWWA C151, installed in accordance with C 600 or polyvinyl chloride (PVC) as per ASTM D 1784 and 1785. All pipes and joints shall be capable of at least 1.03 Mpa (150 psi) and 1.38 (200psi) hydrostatic test pressure unless otherwise specified. Pipes should be adequate to carry the maximum quantity of water at acceptable velocities 0.9 to 1.5m/sec (3 to 5 ft/sec) at maximum flows not to exceed 2.8m/sec (9.2ft/sec) with working pressures of 240kPa (35psi) to 350kPa (50psi). **Minimum pressure shall be 140kPa (20psi) to** all points of the distribution system and **maximum pressure shall be 690kPa (75psi)**. If high pressures (greater than 690kPa) cannot be avoided, pressure-reducing valves shall be used. Water service connections to buildings shall vary from 19mm, 25mm or 38mm to 75mm, as calculated, depending on the usage requirement. Pipe service connections from the distribution main to the building shall be either Polyvinyl Chloride (PVC) plastic Schedule 80 ASTM D 1785 or copper tubing conforming to ASTM B 88M, Type K, annealed. After choosing piping material type, use similar piping materials for all buildings for efficiency of future maintenance activities. The distribution network shall be laid out in a combination grid and looped pattern with dead ends not exceeding 30m (99 feet). Dead end sections shall not be less than 150mm (6 inch) diameter and shall either have blow off valves or fire hydrants (flushing valves) installed for periodic flushing of the line. Any pipe with a fire hydrant on the line shall be at least 150mm (6 inch) in diameter. Water supply distribution shall connect to a building service at a point approximately 1.5m (5 feet) outside the building or structure to which the service is required. Adequate cover must be provided for frost protection. A minimum cover of 800mm (2'-8") is required to protect the water distribution system against freezing. Water lines less than 1.25 meters (4 feet) deep under road crossings shall have a reinforced concrete cover of at least 150 mm (6 inch) thickness around the pipe.

2.3.6.3.2 Pipe

The Contractor shall provide pipe of adequate strength, durability and be corrosion resistant with no adverse effect on water quality. The exterior surface of the pipe must be corrosion resistant. If the pipe is installed underground pipe shall be encased with polyethylene in accordance with AWWA C105. Water distribution pipe material shall be PVC or Ductile Iron (DI). Ductile iron pipe shall conform to AWWA C104, etal. DI fittings shall be suitable for 1.03MPa (150psi) pressure unless otherwise specified. Fittings for mechanical joint pipe shall conform to AWWA C110. Fittings for use with push-on joint pipe shall conform to AWWA C110 and C111. Fittings and specials shall be cement mortar lined (standard thickness) in accordance with C104. Polyvinyl Chloride (PVC) pipe shall conform to ASTM D 1785. Plastic pipe coupling and fittings shall be manufactured of material conforming to ASTM D 1784, Class 12454B. PVC screw joint shall be in accordance with ASTM D 1785, etal, Schedules 40, 80 and 120. PVC pipe couplings and fittings shall be manufactured of material conforming to ASTM D 1784, Class 12454B. Pipe less than 80mm (3 inch), screw joint, shall conform to dimensional requirements of ASTM D schedule 80. Elastomeric gasket-joint, shall conform to dimensional requirements of ASTM D 1785 Schedule 40, All pipe and joints shall be capable of 1.03 Mpa (150psi) working pressure and 1.38 Mpa (200psi) hydrostatic test pressure.

2.3.6.3.3 Hydrostatic, Leakage and Disinfection tests

The Contracting Officer will be notified not less than 48 hours in advance of any water piping test and will be given full access for monitoring testing procedures and results. Where any section of water line is provided with concrete thrust blocking for fittings or hydrants tests shall not be made until at least 5 days after installation of the concrete thrust blocking, unless otherwise approved.

2.3.6.3.4 Pressure Test

After the pipe is laid, the joints completed, and the trench partially backfilled leaving the joints exposed for examination, the newly laid piping or any valved section of piping shall, unless otherwise specified, be subjected for 1 hour to a hydrostatic pressure test of 1.03 MPa (150 psi). Each valve shall be opened and closed several times during the test. Exposed pipe, joints, fittings, hydrants and valves shall be carefully examined during the partially opened trench test. Joints showing visible leakage shall be replaced or remade as necessary. Cracked or defective pipe, joints, fittings, hydrants and valves discovered following this pressure test shall be removed and replaced and retested until the test results are satisfactory.

2.3.6.3.5 Leakage Test

Leakage test shall be conducted after the pressure tests have been satisfactorily completed. The duration of each leakage test shall be at least 2 hours and during the test the water line shall be subjected to not less than 1.03 MPa (150psi). Leakage is defined as the quantity of water to be supplied into the newly laid pipe, or any valved or approved section, necessary to maintain pressure to within 34.5kPa (5 psi) of the specified leakage test pressure after the pipe has been filled with water and the air expelled. Pipe installation will not be accepted if leakage exceeds the allowable leakage, which is determined by the following formula:

L = 0.0001351ND (P raised to 0.5 power) L = Allowable leakage in gallons per hour N = Number of joints in the length of pipeline tested D = Nominal diameter of the pipe in inches P = Average test pressure during the leakage test, in psi gauge

Should any test of pipe disclose leakage greater than that calculated by the above formula, the defective joints shall be located and repaired until the leakage is within the specified allowance, without additional cost to the government.

2.3.6.3.6 Bacteriological Disinfection

2.3.6.3.6.1 Disinfection Procedure

Before acceptance of potable water operation, each unit of completed waterline shall be disinfected as prescribed by AWWA C651. After pressure tests have been completed, the unit to be disinfected shall be thoroughly flushed with water until all entrained dirt and mud have been removed before introducing the chlorinating material. Flushing will be performed in a manner and sequence that will prevent recontamination of pipe that has previously been disinfected. The chlorinating material shall be liquid chlorine, calcium hypochlorite, or sodium hypochlorite. The chlorinating material shall provide a dosage of not less than 50 ppm and shall be introduced into the water lines in an approved manner. Polyvinyl Chloride (PVC) pipelines shall be chlorinated using only the above-specified chlorinating material in solution. The agent shall not be introduced into the line in a dry solid state. The treated water shall be retained in the pipe long enough to destroy all non-spore forming bacteria. Except where a shorter period is approved, the retention time shall be at least 24 hours. Valves on the lines being disinfected shall be opened and closed several times during the contact period.

2.3.6.3.6.2 Sampling

For each building connected to the water system, personnel from the Contractor's commercial laboratory shall take at least 3 water samples from different points, approved by the Contracting Officer, in proper sterilized containers and perform a bacterial examination in accordance with approved methods. The commercial laboratory shall be verified to be qualified by the appropriate authority for examination of potable water.

2.3.6.3.6.3 Acceptance Requirements

The disinfection shall be repeated until tests indicate the absence of pollution for at least 2 full days. The unit will not be accepted until satisfactory bacteriological results have been obtained.

2.3.6.3.7 Time for making Tests

Except for joint material setting or where concrete thrust blocks necessitate a 5-day delay, pipeline jointed with rubber gaskets, mechanical or push-on joints, or couplings may be subjected to hydrostatic pressure, inspected and tested for leakage at any time after partial completion of backfill.

2.3.6.3.8 Concurrent Tests

The Contractor may elect to conduct the hydrostatic tests using either or both of the following procedures. Regardless of the sequence of tests employed, the results of pressure tests, leakage tests, and disinfection shall be recorded for submission and approval. Replacement, repair or retesting required shall be accomplished by the Contractor at no additional cost to the Government. a. Pressure test and leakage test may be conducted concurrently, b. Hydrostatic tests and disinfection may be conducted concurrently, using water treated for disinfection to accomplish the hydrostatic tests. If water is lost when treated for disinfection and air is admitted to the unit being tested, or if any repair procedure results in contamination of the unit, disinfection shall be re-accomplished.

2.3.6.3.9 Valves

Valves (Gate valves w/box) shall be placed at all pipe network tee and cross intersections and the

number of valves shall be one less than the number of lines leading into and away from the intersection. For isolation purposes valves shall be spaced not to exceed 3600 mm (12 feet). Gate valves shall be in accordance with AWWA C 500 and/or C509. Butterfly valves (rubber seated) shall be in accordance with C504 etal. The valves and valve boxes shall be constructed to allow a normal valve key to be readily used to open or close the valve. Provide traffic-rated valve boxes. Provide concrete pad, 1 meter (3'-4") square, for all valve boxes.

2.3.6.3.10 Vacuum and Air Release Valves

Air release valves are required to evacuate air from the main high points in the line when it is filled with water, and to allow the discharge of air accumulated under pressure. Vacuum relief valves are needed to permit air to enter a line when it is being emptied of water or subjected to vacuum. Contractor shall submit manufacturer's data for properly sized combination air and vacuum release valves and determine their locations on the distribution system subject to review and approval of the Contracting Officer.

2.3.6.3.11 Blow-Off Valves

The Contractor shall provide 40-50mm (1-5/8" – 2") blow-off valves at ends of dead end mains. Valves should be installed at low points in the mains where the flushing water can be readily discharged to natural or manmade drainage ditches, swales or other.

2.3.6.3.12 Thrust Blocking

Contractor shall provide concrete thrust blocking at any point where the layout of the system changes the direction of the flow, increases the velocity, or decreases or stops the flow. At these points, the pipes and fittings must be anchored and kept from moving or pulling apart by the use of thrust blocks installed against undisturbed earth.

2.3.6.4 Sanitary Sewer

2.3.6.4.1 General

There are no functional or salvageable sanitary sewer collection, treatment or disposal facilities at this site. The Contractor shall obtain topographic information or other maps that show vegetation, drainage channels and other land surface features such as underground utilities and related structures that may influence the design and layout of the collection system. If maps are not available, or do not provide satisfactory information or sufficient detail of the site, field surveys shall be performed. Sanitary sewers less than 1.25 meters (4 feet) under road crossings shall have reinforced concrete cover at least 150 mm (6 inch) thick around the pipe.

Exterior sanitary sewer line construction shall include service to all buildings as described in the Scope of Work Section 01010. Contractor shall design sanitary sewer collection system using approved field survey data and finished floor elevations. The sewer collection system shall be designed to accommodate the initial occupancy (3,200) as well as the future expansion of (800) for a total occupant load of (4,000) persons. Depending upon the topography and building location, the most practical location of sanitary sewer lines is along one side of the street. In other cases they may be located behind buildings midway between streets. Main collection sewers will follow the most feasible route to the point of discharge. The sewer collection system shall be designed to accommodate the initial occupancy and a reasonable expansion capability. All sewers shall be located outside of the roadways as much as practical, and minimize the number of roadway crossings. To the extent practical, a sewer from one building shall not be constructed under another building, or remain in service where a building is subsequently constructed over it. Construction required shall include appurtenant structures and building sewers to points of

connection with building drains 1.5m (5 feet) outside the building to which the sewer collection system is to be connected.

The Contractor shall use the following criteria where possible to provide a layout which is practical, economical and meets hydraulic requirements: 1) Follow slopes of natural topography, 2) avoid routing sewers through areas which require extensive restoration or underground demolition, 3) Avoid areas of high groundwater and placement of sewer below the groundwater table, 4) locate manholes at change in direction, size or slope of gravity sewers, 5) use straight sections between manholes, curved alignment shall not be permitted, 6) locate manholes at intersections of streets where possible, 7) avoid placing manholes where the tops will be submerged or subject to surface water inflow, 8) evaluate alternative sewer routes where applicable, 9) verify that final routing selected is the most cost effective alternative that meets service requirements. In the event that facilities to be provided under the contract must be occupied prior to completion of permanent wastewater infrastructure, the Contractor will be responsible for providing temporary portable shower and bathroom facilities.

2.3.6.4.2 Protection of Water Supplies

The Contractor shall ensure that the sewer design meets the following criteria:

2.3.6.4.3 Sanitary sewers shall be located no closer than 15m (50 feet) horizontally to water wells or reservoirs to be used for potable water supply.

2.3.6.4.4 Sanitary sewers shall be no closer than 3 m (10 feet) horizontally to potable water lines; where the bottom of the water pipe will be at least 300mm (12 inches) above the top of the sanitary sewer, horizontal spacing shall be a minimum of 1.8 m (6 feet).

2.3.6.4.5 Sanitary sewers crossing above potable water lines shall be constructed of suitable pressure pipe or fully encased in concrete for a distance of 3000 mm (10 feet) on each side of the crossing. Pressure pipe will be as required for force mains shall have no joint closer than 1 meter (3 feet) horizontally to the crossing, unless the joint is encased in concrete.

2.3.6.4.6 Quantity of Wastewater

The Contractor shall verify the average daily flow considering both resident (full occupancy) and non-resident (8hr per day) population. The average daily flow will represent the total waste volume generated over a 24-hour period, and shall be based on the total population of the facility and usage rate of 41 gallons per capita day (water usage). The average daily flow will represent the total waste volume generated over a 24-hour period, and shall be based on a population of 4,000 troops and usage rate of 155 lt (41 gallons) per capita day (water usage) equaling 620 m^3 (164,000 gallons) per day. The wastewater flow rate shall be calculated as 80% of average daily flow or 496 m^3 (131,000 gallons) per day. Design criteria guideline shall be based on average influent wastewater characteristics as BOD of 400mg/l, SS of 400mg/l, BOD load of 750ppd, and SS load of 750ppd.

2.3.6.4.7 Gravity Sewer

Sanitary sewers shall be designed to flow at 90 to 95 percent full. Sanitary sewer velocities shall be designed to provide a minimum velocity of 0.6 meters per second (mps) or 2.0 feet per second (fps) at the ADD flow rate and a minimum velocity of 0.8 to 1.05 mps (2.5-3.5fps) at the peak diurnal flow rate. In no case shall the velocity drop below 0.3 mps, (1.0 fps) to prevent settlement of organic solids suspended in the wastewater. Pipe slopes shall be sufficient to provide the required minimum velocities and depths of cover on the pipe. Unless otherwise indicated (see Building Connections and Service Lines), gravity sewer pipe shall be installed in straight and true runs in between manholes with constant slope and direction. Adequate cover must be provided

for frost protection. A minimum cover of 800 mm (2'-8") will be required to protect the sewer against freezing.

2.3.6.4.8 Manholes

The Contractor shall provide standard depth manholes (MH), (depth may vary) an inside dimension of 1.2 meters (4 feet). Manholes shall be made of cast-in-place reinforced concrete with reinforced concrete cover. Alternate precast manhole option shall taper to a 750 mm (30-inch) cast iron frame that provides a minimum clear opening of 600 mm (24 inches). In every case, the manholes, frames and covers shall be traffic rated, H-20 load rating. All manholes shall be provided with a concrete bench with a flow line trough, smoothly formed to guide waste flow to the outlet pipe from the inlet pipe(s). The top surface of the bench shall be above the crown of all pipes within the manhole. All surfaces of the bench shall be sloped smoothly toward the trough to guide flow, even under peak flow conditions.

2.3.6.4.8.1 Manhole Design Requirements

Manholes are required at junctions of gravity sewers and at each change in pipe direction, size or slope, except as noted hereinafter for building connections.

2.3.6.4.8.2 Spacing

The distance between manholes must not exceed 120 m (400 ft) in sewers of less than 460 mm (18 inches) in diameter. For sewers 460 mm (18 inches) and larger, and for outfalls from wastewater treatment facilities, a spacing of up to 180 m (600 ft) is allowed provided the velocity is sufficient to prevent the sedimentation of solids.

2.3.6.4.8.3 Pipe Connections

The crown of the outlet pipe from a manhole shall be on line with or below the crown of the inlet pipe.

2.3.6.4.8.4 Pipe

Pipe shall conform to the respective specifications and other requirements as follows: Provide Polyvinyl Vinyl Chloride (PVC) conforming to ASTM D 3034, Type PSM with a maximum SDR of 35, size 380 mm (15inch) or less in diameter. PVC shall be certified as meeting the requirements of ASTM D 1784, cell Class 12454 B.

2.3.6.4.8.5 Fittings

Fittings shall be compatible with pipe supplied and shall have a strength not less than that of the pipe. Fittings shall conform to the respective specifications and requirements as follows: provide PVC fittings conforming to ASTM D 3034 for type PSM pipe.

2.3.6.4.8.6 Joints

Joints installation requirements shall comply with the manufacturers installation instructions. Flexible plastic pipe (PVC or high density polyethylene pipe) gasketed joints shall conform to ASTM D3212.

2.3.6.4.8.7 Branch Connections

Branch connections shall be made by use of regular fittings or solvent-cemented saddles as approved. Saddles for PVC pipe shall conform to Table 4 of ASTM D 3034.

2.3.6.4.8.8 Frames and Covers

Frames and covers shall be cast iron, ductile iron or reinforced concrete, traffic rated in any case to an H-20 load rating. Cast iron frames and covers shall be traffic rated, circular with vent holes.

2.3.6.4.8.9 Steps for Manholes

Steps shall be cast iron, polyethylene coated, at least 15 mm (5/8 inch) thick, not less than 400mm (16 inches) in width, spaced 300 mm (12 inches) on center.

2.3.6.4.9 The minimum depth of the cover over the pipe crown shall be 0.8m (2'-8").

2.3.6.4.10 Building Connections and Service Lines

Building connections and service lines will be planned to eliminate as many bends as practical and provide convenience in rodding. Bends greater than 45 degrees made with one fitting should be avoided; combinations of elbows such as 45-45 or 30-60 degrees should be used with a cleanout provided. Connections to other sewers will be made directly to the pipe with standard fittings rather than through manholes. However, a manhole must be used if the connection is more than 31m from the building cleanout. Cleanouts shall be provided outside of the building. Service connection lines will be a minimum of 100 mm (4 inch) diameter and laid at a minimum 1% grade, but up to 2% as design parameters dictate. Service laterals shall be 150 mm (6 inch) and sloped to maintain the minimum velocity as described in paragraph "Gravity Sewer."

2.3.6.4.11 Cleanouts

Cleanouts must be installed on all sewer-building connections to provide a means for inserting cleaning rods into the underground pipe. Install manufactured wye fittings. In lieu of a wye fitting, an inspection chamber may be installed. The inspection chamber shall be of the same construction as a manhole. Preferably the cleanout will be of the same diameter as the building sewer, and never be smaller than 100 mm (4 inch).

2.3.6.4.12 Field Quality Control

2.3.6.4.12.1 Field Tests and Inspections

The Contracting Officer will conduct field inspections and witness field tests specified in this section. The Contractor shall perform field tests and provide labor, equipment and incidentals required for testing.

Check each straight run of pipeline for gross deficiencies by holding a light in a manhole; it shall show a practically a full circle of light through the pipeline when viewed from the adjoining end of the line. When pressure piping is used in a non-pressure line for non-pressure use, test this piping as specified for non-pressure pipe.

Test lines for leakage by either infiltration tests or exfiltration tests. Prior to testing for leakage, backfill trench up to at least lower half of the pipe. When necessary to prevent pipeline movement during testing, place additional backfill around pipe to prevent movement during testing, but leaving joints uncovered to permit inspection. When leakage or pressure drop exceeds the allowable amount specified, make satisfactory correction and retest pipeline section in the same manner. Correct visible leaks regardless of leakage test results.

Infiltration tests and ex-filtration tests: Perform these tests for sewer lines made of specified material, not only concrete, in accordance with ASTM C 969M, ASTM C 969. Make calculations in accordance with the Appendix to ASTM C 969M, ASTM 969.

Low-pressure air tests: Perform tests as follows: 1) Concrete pipe: Test in accordance with ASTM C 924M, ASTM C 924. Allowable pressure drop shall be given in ASTM C 924M ASTM C 924. Make calculations in accordance with the Appendix to ASTM C 924M, ASTM C 924; 2) Ductile-iron pipe: Test in accordance with the applicable requirements of ASTM C 924M, ASTM C 924. Allowable pressure drop shall be as given in ASTM C 924M, ASTM C 924. Make calculations in accordance with the Appendix to ASTM C 924M, ASTM C 924; 3) PVC Plastic pipe: Test in accordance with applicable requirements of UBPPA UNI-B-6. Allowable pressure drop shall be as given in UBPPA UNI-B-6. Make calculations in accordance with the Appendix to UBPPA UNI-B-6.

2.3.6.4.13 Deflection Testing

Deflection testing will not be required however; field quality control shall ensure that all piping is installed in accordance with deflection requirements established by the manufacturer.

2.4 Sewage Treatment

The Contractor shall design an Aerated Stabilization Pond to serve 4,000 personnel on a 24-hour basis. Basic general requirements for sewage aerated stabilization pond shall include the following:

2.4.1 The Contractor shall provide an aerated stabilization (facultative) pond treatment system with a nominal capacity (adjusted to 80% of 164,000 gpd) of 131,000 gpd based on water usage rate of 41 gpcd (ADD) operating 24 hours a day. The Contractor shall verify and adjust flow rate. The Contractor shall coordinate the selection of the aerated stabilization pond design with the Contracting Officer through the submittal process. Design and construction shall have flow splitter, primary and secondary ponds in series with chlorine contact basin. Sludge drying beds shall be designed and constructed accordingly. The aerated stabilization pond shall be capable of achieving a water quality effluent of less than or equal to 30mg/l Biochemical Oxygen Demand (BOD) and 30mg/l Total Suspended Solids (TSS). The Contractor shall provide yard hydrants, hose and hose cabinet to facilitate the washing of the equipment. The aerated stabilization pond shall be equipped with a means of draining the system for maintenance. The Contractor shall insure that engineering, construction and maintenance is handled by experienced engineers, trained installers and qualified technicians, respectively. Individual equipment and every component shall be manufactured by manufacturers that have back-up spare parts in stock. Effluent from the treatment facility must be routed to a natural or manmade drainage area and must not be allowed to pond or spread on the ground surface.

All Dining Facilities (DFACs). Shall incorporate preliminary treatment with use of grease traps prior flow entering to the sanitary sewer collection system. Grease trap will connect to the sanitary sewer collection system and located outside the DFAC building.

Upon completion of the aerated stabilization pond installation, the Contractor shall check the system in the presence of the Manufacturer's Representative and Contracting Officer according to prescribed manufacturer's check procedures (O&M Manual). Upon clearance, the Contractor shall perform initial start up and initial operation, also in the presence of the Manufacturer's Representative (MR) and Contracting Officer (CO). The Contractor will operate the aerated stabilization pond for the contractual period performing all daily and weekly O&M tasks as recommended by the manufacturer's O&M Manual. The Contractor shall utilize the services of qualified operators, approved by the Contracting Officer, preferably trained Afghan Nationals, but imported specifically for that purpose, if necessary. During routine O&M, the Contractor shall perform all sampling and testing necessary to ensure proper daily operations and to optimize the

system efficiency in achieving required effluent standards. During this performance period, the Contractor shall ensure that all prudent Log Records of daily O&M (repairs, inflow cycle, aeration cycles, effluent flow cycle and condition, etc.) are clearly, accurately and consistently recorded. The Contractor shall establish classroom training for USACE and Afghanistan National Army facility authorities and will establish long-term on-job-training (3 months) for three local Nationals with the goal to turn over O&M to their capable services at the end of the Contractor's period of performance.

2.4. 2 Sludge Handling and Disposal (Sludge Drying Beds)

The Contractor shall prepare an operation and maintenance plan for the aeration operation and sludge removal and disposal. Drying of the sludge may take at least 12 weeks in the winter and 6 weeks in the summer. The operation and maintenance plan shall be submitted for Contracting Officer's review and approval.

2.4.3 Effluent Pond

The Contractor shall construct a holding pond to receive the treated effluent. The pond shall have an over flow device. The purpose of the effluent pond is to allow for pumping of treated water into irrigation trucks for site watering.

2.5 FORCE PROTECTION PERIMETER FENCE

All foundations shall extend below the frost line to frost depth (min 800 mm). Provide guard towers at 400 meter intervals; Provide main gate with a guard Booth; and a reception building. Provide secondary gate with a guard booth. See 2.24.1 ASP Guard tower for requirements for ASP. Provide an anti vehicle trench (3 meters wide X 2 meters deep) adjacent all force protection fences and walls. Design anti-vehicle trenches to drain and not hold water after rain

2.5.1 Design and construct a Force Protection Perimeter Fence per Scope of Work Section 01010 and RFP. Note: Coordinate the height and construction of stone wall to align chain link with concertina wire to stone wall and concertina wire.

2.5.2 Provide concertina wire at top of stone wall, chain link fence, and all gates. Concertina wire shall be supported double 45 degree outriggers on top of fence posts with 3 strands of 14 gauge barbed wire on each side and a center 600 mm dia concertina wire with support wire attached to upright post at 3000 mm O.C.

2.5.3 Perimeter fence chain link shall be 2400 millimeters above finish grade and align top of chain link with peak of concrete cap on stone wall. Provided with 'V' extension arms at top of posts with 3 strands of barbed wire each side, top of concertina wire at 3000 mm minimum above finish grade (AFG). All chain link type fencing as shown in the drawings and RFP shall be: Fence fabric shall be galvanized chain link with galvanized framework, 9-gauge thick wire woven in 50x50 mm mesh and shall be twisted and barbed on the top selvage and knuckled on the bottom selvage. Provide details and elevations of fence indicating how fence will transition from level to slope and over ridges.

2.5.4 Clips and top rail will not be used. Fence fabric will be installed no higher than 50 mm from the ground. Supporting arms will be securely anchored with rivets to the line posts. Fences shall have a bottom rail bolted to double rail ends and double rail ends shall be securely fastened to the posts. Bolts shall be peened to prevent easy removal. Bottom rail shall be installed before chain link fabric. Posts will be limited to ASTM F 1083, (1993) Pipe, Steel, Hot-Dipped Zinc-Coated (Galvanized) Welded and PVC coated for Fence Structures Group IA or Group IC steel pipe only. The fence shall be provided with the cable system shown on the attached figures. Cable shall conform to ASTM A 475, 19.05 mm (3/4-inch), extra high strength, Class A zinc coating. Turnbuckles, for the cable, shall conform to ASTM F 1145, 31.8 mm x 610 mm (1-1/4

inch x 24 inches) Type I, galvanized. Clamps shall be of equal or greater strength than the shear strength of the cable. All cable accessories shall be galvanized. Placement of cables will be at 760 mm and 890 mm above finish grade, measured to the centerline of the cables. Place the cable between the fence fabric and the line posts with U-bolts as shown. Reduce the slack by anchoring and tightening the cable so that it will not move along or slide through the U-bolts. Cable connections shall be of equal or greater strength than the shear strength of the cable. Dead man spacing shall be as shown on drawings. The next dead man shall start two fence panels back, overlapping the previous cable run, to cover the gap of the last dead man and to eliminate the need for pipe guards at those locations.

2.5.6 Design and construct a Force Protection Perimeter Stone Wall perimeter Fence per Scope of Work Section 01010 and RFP. All foundations shall extend below the frost line to frost depth (min 800 mm), top of wall shall be 2400 mm from finish grade to high point of concrete cap, and align with top of chain link. Provide detail/elevation at fence indicating how fence will transition from level to slope and over ridges. The stone walls will need vertical reinforcing and horizontal reinforcing to resist wind and seismic loads. The vertical reinforcing must be adequately anchored or lapped into the wall footing. The footing must be sized to resist sliding and overturning from the design loads.

2.5.7 Design and construct a Force Protection entry gates heavy steel frame, with decorative 6mm steel skin and matching man gate with view port. Gates shall swing from one meter square reinforced concrete columns covered with stone to match fence.
Provide reinforced grade beam across gateway flush with pavement to lock gates with flush mounted vertical sliding bolts, bolts shall be 50 mm dia solid steel. Provide rolling steel rail device at each lane, capable of stopping large (10,000 lb.) trucks, in addition to heavy duty steel gates into the Brigade, ASP, ETTC Compound, Interpreters Compound and other facilities.

3. ARCHITECTURAL REQUIREMENTS

3.1 GENERAL

3.1.1 The Scope of Work is stated in Section 01010. All materials approved shall become standardized material to be used throughout the facilities under contract. Different sub-contractors shall not use different materials or standards under the contract.

3.1.2 Intent of the project is to meet the requirements per the RFP, Codes and Standards, and if possible use locally procured materials and labor to the maximum extent possible.

3.1.3 The site is located on undeveloped land. Reference the site map for the project location.

3.1.4 The Contractor shall survey and produce detailed documentation of the site utilities, buildings, and systems for the entire compound. Contractor shall perform detailed site measurement as needed to verify available printed and electronic documentation. Drawings shall clearly distinguish existing conditions for work performed under this contract. Documentation work shall be performed on computer assisted design and drafting (CADD). New documentation shall be performed on AutoCAD version 2006, conforming to A/E/C Tri Services standards. Units shall be metric. Language for all documents shall be in American English.

3.2 DESIGN PRODUCTS

3.2.1 General
The following are contract deliverables which expound upon and finalize the Design parameters/requirements outlined within the contract documents. They shall be prepared in such

a fashion that the Prime Contractor is responsible to the Government and not as an internal document between the Prime Contractor and its Sub Contractors, Vendors, Suppliers, etc.

3.2.2 Design Analysis

The design analysis should be written in the English Language for review by the Government for all buildings and to have indexes, table of contents and each page numbered. Each building shall be listed as indicated in Section 01010. The design analysis is a written explanation of the project design which is expanded and revised (updated) as the design progresses. The design analysis shall contain all explanatory material giving the design rationale for any design decisions which would not be obvious to an engineer reviewing the final drawings and specifications. The design analysis contains the criteria for and the history of the project design, including criteria furnished by the Government, letters, codes, references, conference minutes, and pertinent research. Design calculations, computerized and manual, are included in the design analysis. Narrative descriptions of design solutions are also included. Written material may be illustrated by diagrams and sketches to convey design concepts. Catalog cuts and manufacturer's data for all equipment items required, shall be submitted. Copies of all previous design phase review comments and the actions assigned to them shall be included with each submission of the design analysis. Specific requirements for the design analysis, listed by submittal phase, are contained hereinafter. Provide Code Analysis for each building based on the following items and code sections.

3.2.3 Code Analysis

The following analysis information is required for all buildings submitted in this proposal. List: Seismic Design Category, Wind Speed, and Snow Load.

Analysis Items	Code References – International Building Code (IBC) 2003
1. Type of Construction	IBC Chapter 6
2. Occupancy Classification	IBC Chapter 3 and Table 302.3.2
3. Actual Allowable Area	IBC 503, 505-508 & Table 503
4. Actual Allowable Height	IBC 504 & Table 503
5. Occupant Load (per use)	IBC 1004 & Table 1004.1.2
6. Exits Required/Provided	IBC 1004 & Table 1004.1.2 IBC 1014, 1018, and 1018.2
7. Required Opening Protection	IBC Table 602
8. Fire Resistive Construction	IBC Table 601

3.2.4 Design Calculations

When design calculations are voluminous, they shall be bound separately from the narrative part of the design analysis. The design calculations shall be presented in a clean and legible form incorporating a title page and index for each volume. A table of contents, which shall be an index of the indices, shall be furnished when there is more than one volume. The source of loading conditions, supplementary sketches, graphs, formulae, and references shall be identified. Assumptions and conclusions shall be explained. Calculation sheets shall carry the names or initials of the computer and the checker and the dates of calculations and checking. No portion of the calculations shall be computed and checked by the same person. Either the designer or the checker shall be a licensed engineer.

3.2.5 Specifications

Specifications shall be prepared in accordance with the Construction Specifications Institute (CSI) format. The Design-Build Contractor prepared specifications shall include as a minimum, all applicable specifications sections referenced by the CSI. Where the CSI does not reference a specification section for specific work to be performed by this contract, the Design-Build Contractor shall be responsible for creating the required specification. All materials specified shall use CSI Standards and shall be listed in Section 1.1 References of each Specification Section. It shall be the Contractor's responsibility to show that equivalency requirements are met if the Standard is not per (CSI) format. Designer shall not edit out any references, standards, etc. relating to any materials or items used in the project.

3.2.6 Ambiguities and indefinite specifications

Ambiguities, indefinite specification requirements (e.g., highest quality, workmanlike manner, as necessary, where appropriate, as directed etc.) and language open to interpretation is unacceptable.

3.2.7 Colors

Designer of record shall provide one Color Board comprised of all finishes to be used on project and submit at 65% for approval. Upon approval two Color Boards shall be submitted for record. Color Boards shall be kept at job site for approval of materials used at jobsite.

3.3 DEMOLITION

3.3.1 Limited exterior site clearing is required; site preparation is required. There are several structures on site requiring demolition.

3.3.2 As all buildings to be constructed under this Contract are new, there is no interior demolition required.

3.4 LIFE SAFETY/ FIRE PROTECTION/ HANDICAPPED ACCESSIBILITY

To the extent possible, all facilities will be designed in accordance with recognized industry standards for life safety and building egress. An adequate fire alarm system, fire extinguishers, and smoke alarms shall all be included as required. If a sprinkler system is required by building code, a waiver will have to be obtained before construction notice to proceed is issued. However, due to the lack of adequate water volume and pressure, sprinkler systems are not feasible. The facility shall comply with all other safety requirements of NFPA 101 and the latest edition of the International Building Code. In keeping with the intended function of these facilities, handicapped accessibility will not be incorporated into this project. Due to the war contingency requirement, it is assumed that only able-bodied military and civilian personnel will use the facilities listed herein.

3.5 ANTITERRORISM/ FORCE PROTECTION

Force protection/anti-terrorism measures for this location shall be followed and incorporated into this project in accordance with the referenced DoD Regulations (check UFC 4-010-01 and other related requirements). Information regarding force protection may be found at the following link: www.tisp.org/files/pdf/dodstandards.pdf .

3.6 EXCAVATION

Trench excavation shall be made for concrete footings. Trenches shall be a minimum of .8 meter deep. Trenches deeper than 1.5 meters shall have protective shoring to protect workers or have the sides of the trench sloped back at a slope of 1.5:1. Care shall be taken when backfilling of foundation trenches to avoid damage to walls. Any excess dirt shall become the property of the Contractor and shall be removed from the site to a location approved by the Contracting Officer.

3.7 CONCRETE

Place 100 mm (4") of capillary water barrier below areas to receive a concrete slab on properly

compacted soil free of organic material. Concrete flooring in wet areas shall slope to the floor drain and not allow for water to puddle. Concrete slabs in all areas shall not be placed prior to inspection and approval of piping and sub-surface by the Contracting Officer. Foundation trenches shall be level and free of loose material. Trenches shall be inspected and approved by the Contracting Officer prior to placing of any concrete foundations. See paragraph 5 for structural characteristics of concrete and reinforcing steel for foundations and slabs.

3.7.1 INSULATED CONCRETE SANDWICH WALL SYSTEM

As an option to standard masonry construction, the Contractor may construct walls of single story buildings using an insulated concrete sandwich wall system. The insulated concrete sandwich wall system shall be field fabricated and composed of a 76 mm (3 inch) expanded polystyrene core that spans in a single piece from floor elevation to top of wall elevation. The polystyrene core shall have a welded wire fabric, 50 mm x 50 mm (2 inch x 2 inch) mesh, 2.52mm (12.5 gauge) wire, attached to both faces of the polystyrene core. The welded wire mesh shall be installed at 13mm from the face of the polystyrene core. The welded wire mesh on each face shall be attached to each other and the polystyrene core with diagonal truss wires. Apply sprayed concrete (shotcrete) to a minimum thickness of 45mm (1-3/4 inch) or as structural calculations require, whichever is greater. Method of placing the shotcrete shall be in conformance with ACI 506R-85. Concrete finishing shall be done by appropriate hand tools (darby, trowel, etc.) to provide the desired finish effect. This wall system applies to all barracks type buildings, Communication building, DPW shop building, Detention Facility, Embedded Training Team Compound, Interpreter Facilities, and Fire Station. All 3-D building shall have a metal roof meeting the requirements of RFP. All 3.D walls & ceiling shall be plastered interior/exterior and painted.

3.8 MASONRY

Storage of masonry materials shall be in a dry place or materials shall be covered with a plastic protective layer. Cover open walls each day to keep them protected and dry. Concrete masonry units (CMU) for exterior walls shall be either 200 mm or 300 mm wide x 400 mm x 200 mm high as shown on drawings. All cells shall be fully grouted in exterior walls. They shall be installed in running bond level and plumb. Mortar joints shall be 9 mm on all sides between CMU. Joints shall be struck with a concave tool to provide a smooth recessed curved surface. Install only quality units. The surface shall be free of chips, cracks, or other imperfections that would detract from the overall appearance of the finished wall. Defective CMU or mortar shall be rejected.

3.9 METAL

3.9.1 STEEL ROOF JOISTS

Steel roof joists shall be placed according to the roof design and roof manufacturer specifications. Steel “Z” purlins shall be installed perpendicular to the steel beams. Use continuous metal roof sheets from ridge to eave to avoid constructing roof seams. In lieu of the continuous metal roof sheets, the Contractor can submit a plan for roofing seams; however, the plan must show a detail of how leaks will be avoided, and the Contracting Officer before application must approve the plan. Steel “hat channels” shall be installed on the bottom side of steel beams for the installation of gypsum board with screws. Provide all necessary metal framing for roof fascia and soffits. See structural paragraph for structural characteristics of steel joists.

3.9.2 METAL WINDOW SILLS

Galvanized metal window sills, 1 mm (20 gage), shall be installed on the exterior of all windows. The metal window sills shall have a turn down of 50 mm over the exterior masonry and stucco. Metal sills shall extend from side to side of the masonry opening in a single piece. Bevel all

exposed metal sill edges as a safety feature. Extend the metal windowsill a minimum of 20 mm under the bottom of the aluminum windows. Install masonry mortar as required for a smooth surface under the window sills. Sills shall slope a minimum of 6mm to the exterior and not allow water to puddle.

3.9.3 STEEL COOK TOP

Provide steel cook top in kitchen minimum thickness of 25 mm. Provide circular cut outs. Consult with the Contracting Officer for the diameter of circular cutouts. Provide steel infill plates for all cut out openings. Cook top can be made of several pieces for ease of handling. Adjacent plates shall be tight fitting to each other. Cook top can be made of several pieces for ease of handling. Provide large Afghan type tea boilers to fit cook top.

3.9.4 PASS-THROUGH COUNTER TOP

Provide 1.6 mm (16 gauge) stainless steel, or 40 mm marble, pass through counter tops at openings between the kitchen and dining area. Edges shall be turned down 30 mm and corners shall be welded and ground smooth. Provide anchor angles welded to the bottom of the counters to anchor tops to masonry walls below. Provide six (6) anchors on the Dish Return Counter, three (3) on each side of the wall. Provide eight (8) anchors on the Serving Counter, four (4) on each side of the wall. Anchor angles to wall with masonry expansion sleeves and stainless steel screws. Counter tops are to be 800 mm wide, 1100 mm height x length of opening shown.

3.10 PRE-ENGINEERED METAL BUILDING

All roof slopes in Pre-Engineered metal buildings and all building in Brigade the roof slopes shall be 4 in 12.

Provide reinforced plastered CMU walls with the Pre-Engineered metal building built above CMU wall height. All supports shall be inbound of the interior face of the reinforced CMU wall.

Pre-engineered Metal Building shall conform to all requirements in Uniform Facility Guide Specification (UFGS) SECTION 13120 PREENGINEERED METAL BUILDINGS

Steel Framing: Steel framing shall conform to American Iron and Steel Institute (AISI), Cold Formed Steel Design Manual, American Institute of Steel Construction (AISC) ASD, Manual of Steel Construction, Allowable Stress Design, and TI 809-07, Design of Cold-Formed Load Bearing Steel Systems and Masonry Veneer/Steel Stud Walls. Cold-formed framing shall consist of steel studs, top and bottom tracks, runners, horizontal bridging, and other cold-formed members and other accessories. All members and components made of sheet steel shall be hot-dip galvanized in accordance with ASTM A 653/A 653M with a minimum coating thickness of G 60. This framing shall be used only in framing the exterior steel stud wall system. Design metal siding and flashing to overhang CMU wall or concrete 50 cm.

3.11 ROOFING **AND WEATHERPROOFING**

3.11.1 SLOPED ROOFS

All roofing shall be standing seam metal roofing or K-Span type building system with matching Kynar 500 finish on all roofing, see Section 01010 for buildings. Roofing system shall include all edge, ridge and penetration flashings necessary for a watertight installation. Provide continuous soffits and ridge vents meeting the venting requirements of the IBC Code. Roof slopes shall be continuous to the perimeter of the building, without interior valleys or depressions where ponds can form. Provide reinforcing at roof and nonskid walk surface at each HEAT/COOL UNIT installed on roof for access, maintenance, and changing filters.

3.11.2 Sloped roofs shall be standing seam metal roofing or K-Span type building system. Roof slopes shall be 4 in 12 minimum. Roof Panels: Panels shall be a minimum of 0.85-070 mm (22 – 24 gauge) standing seam metal. Roof deck assemblies shall be Class 90 as defined in UL 580. Length of sheet shall be sufficient to cover the entire length of any unbroken roof slope when such slope is 9.000 mm or less. When length of run exceeds 9000 mm and panel splices are provided, each sheet in the run shall extend over three of more supports. Sheets longer than 9.000 mm may be furnished if approved by the Contracting Officer. Width of sheets shall provide not more than 450 mm of coverage in place. SSMRS with roofing panels greater than 300 mm in width shall have standing seams rolled during installation by an electrically driven seaming machine. Height of standing seams shall be not less than 60 mm. All sheets shall be cut in the shop to correspond to the roof slope and may have a horizontal joint at the eave line.

Steel Panels: Zinc-coated steel conforming to ASTM A 446, G 90 coating designation. Panels shall be 0.85-070 mm (22 – 24 gauge). The final coating for aluminum, galvanized steel or aluminized steel shall be a factory-applied, oven-baked finish based on Kynar 500® polyvinylidene fluoride resin.

This finish shall be a dispersion coating based on Kynar 500 resin as formulated by an Arkema Kynar 500 licensee. This finish shall be in strict accordance with the formulator's specification and applied by an applicator approved by the formulator. This finish, based on Kynar 500 resin, shall meet the performance criteria of AAMA 2605 specification and be certified by the formulator as containing Kynar 500 resin manufactured by Arkema.

3.11.3 Performance Standards: The SSMRS shall be tested for wind uplift resistance in accordance with ASTM E 1592. The uplift resistance of the SSMRS shall be established as indicated in the "STANDARD TEST METHOD FOR STRUCTURAL PERFORMANCE OF SSMRS BY UNIFORM STATIC AIR PRESSURE DIFFERENCE". The SSMRS design shall be adequate for uplift if the established allowable pressure from testing causes no failure as defined in the Corps of Engineers' STANDARD TEST METHOD FOR STRUCTURAL PERFORMANCE OF SSMRS BY UNIFORM STATIC AIR PRESSURE DIFFERENCE. Testing to ultimate capacity is not required.

3.11.4 Accessories: Accessories shall be furnished with the Standing Seam Metal Roof System. Flashing, gutters, fascias, trim; metal closure strips, caps, and similar metal accessories shall be not less than the minimum thickness specified for roofing panels. Exposed metal accessories shall be finished to match the panels furnished. Molded closure strips shall be closed-cell or solid-cell synthetic rubber or neoprene, or polyvinyl chloride; premolded to match configuration of the covering and shall not absorb or retain water. Thermal spacer blocks and other thermal barriers at concealed clip fasteners shall be as recommended by the manufacturer.

Fasteners: Concealed fasteners for steel roof panels shall be zinc-coated steel, aluminum, corrosion resisting steel, or nylon capped steel, type and size specified below or as otherwise approved for the applicable requirements. Concealed fasteners for aluminum roof panels shall be aluminum or corrosion resisting steel. Fasteners for structural connections shall provide both tensile and shear strength of not less than 350 kilograms per fastener. Fasteners for accessories shall be the manufacturer's standard.

Exposed roof fasteners shall not be used for standing seam roof of K-Span.

Screws: Screws shall be as recommended by the manufacturer to meet the strength design requirements of the panels.

Bolts: Bolts shall be not less than 6 mm diameter, shouldered or plain shank as required, with locking washers and nuts.

Structural Blind Fasteners: Blind screw-type expandable fasteners shall be not less than 6 mm diameter. Blind rivets shall be .28 mm minimum diameter.

3.11.5 Thermal resistance of insulation shall be not less than the R-30. R-values shall be determined at 75 degrees F in accordance with ASTM C 518. Insulation shall have a flame spread not in excess of 25 and a smoke developed rating not in excess of 50 when tested in accordance with ASTM E 84. Insulation shall be a standard product of a manufacturer, factory-marked or identified with manufacturer's name or trademark and R-value. Identification shall be on individual pieces or individual packages. Facing shall be white, either of reinforced foil with a vinyl finish or sheet vinyl except unreinforced foil with a natural finish may be used in concealed locations. Insulation shall have a facing providing a permeability of 0.02 perm or less when tested in accordance with ASTM E 96. Facing shall be of 2 mil thick white vinyl backed with 150 mm by 150 mm glass scrim and 0.7 mil thick metal foil laminate. Reinforced foil with a natural finish may be used for facing in concealed locations. Facings and finishes shall be factory applied.

Rigid or Semi-rigid Board Insulation: Rigid board insulation shall conform to ASTM C 612, Form A, Class 1. All foam plastic insulation shall have a thermal barrier per IBC. Insulation shall not be exposed; any covering required shall meet the life expectation for this facility.

Blanket Insulation: Blanket insulation shall conform to FS HH-ISS8, Form B, Type I, Class 6. Insulation shall not be exposed; any covering required shall meet the life expectation for this facility, and conform to applicable codes.

Insulation Retainers: Insulation retainers shall be type, size, and design necessary to adequately hold the insulation and to provide a neat appearance. Metallic retaining members shall be nonferrous or have a nonferrous coating. Nonmetallic retaining members, including adhesives used in conjunction with mechanical retainers or at insulation seams shall have a fire resistance classification not less than that permitted for the insulation.

Concealed Anchor Clips: Concealed anchor clips shall be as recommended by the manufacturer for the roofing system furnished. Clip bases shall have factory punched or drilled holes for attachment. Clips used with panel width greater than 300 mm shall be made from multiple pieces with the allowance for the total thermal movement required to take place within the clip.

Sealant: Except as stated below, sealants shall be elastomeric type containing no oil or asphalt. Exposed sealant shall cure to a rubber like consistency. All sealants shall be the non-hardening type. Roof panel standing seam ribs shall have continuous sealant that is factory installed.

Gaskets and Insulating Compounds: Gaskets and insulating compounds shall be non-absorptive and suitable for insulating contact points of incompatible materials. Insulating compounds shall be non-running after drying.

Sub-purlins: Sub-purlins, when required by the system design, shall be formed from steel sheet as standard with the manufacturer. The uncoated thickness may be a minimum of 1.5 mm if bolts or structural blind fasteners are used for attachment of the concealed anchor clips to the sub purlins.

Vapor Retarder: Vapor retarder material shall be polyethylene sheeting conforming to the requirements of ASTM D 4397. A fully compatible tape shall be provided which has equal or better water vapor control characteristics than the vapor retarder material. A general-purpose tape, which has some resiliency and cushioning abilities, shall also be provided.

EPDM Rubber Boots: Flashing devices around pipe penetrations shall be flexible, one-piece devices molded from weather-resistant EPDM rubber. Rubber boot material shall be as

recommended by the manufacturer. The boots shall have base rings made of stainless steel that conform to the contours of the roof panel to form a weather-tight seal.

Gutters and Downspouts: Provide eave-mounted gutters on all roof sections over doors and openings extend gutter 1,200 mm past door opening or walk surface whichever is greater. Provide downspouts for all gutter locations. Roof water shall be channeled away from building thru 0.85 MM (22 ga) downspouts with cast iron boots (at grade) and slope grade 2 %. Water from downspouts shall not drain onto or across walkways.

Provide roof coverings, roof gutters or roof water diverter's at all exterior door entry ways to keep rain water off of sidewalks, walkways, steps and any walking surfaces.

Warranties: The SSSMR system shall be warranted as outlined below. Any emergency temporary repairs conducted by the owner shall not negate the warranties. Such warrantees shall start upon final acceptance of the work or the date the Government takes possession, whichever is earlier.

Ventilation: A minimum of 25 mm of airspace shall be provided between the insulation and the roof sheathing. The net free ventilating area shall not be less than 1/300 of the area of the space ventilated, with 100 percent of the required ventilating area provided by ventilators located in the upper portion of the space.

3.11.6 Contractor's Weather Tightness Warranty: The SSSMR system shall be warranted by the Contractor on a no penal sum basis for a period of five years against material and workmanship deficiencies; system deterioration caused by exposure to the elements and/or inadequate resistance to specified service design loads, water leaks, and wind uplift damage. The SSSMR system covered under this warranty shall include the entire roofing system including, but not limited to, the standing seam metal roof panels, fasteners, connectors, roof securement components, and assemblies tested and approved in. In addition, the system shall consist of panel finishes, slip sheet, insulation, vapor retarder, all accessories, components, and trim and all connections with roof panels. This includes roof penetration items such as vents, curbs, and skylights; gutters and downspouts; eaves, ridge, hip, valley, rake, gable, wall, or other roof system flashings installed and any other components specified within the contract to provide a weather tight roof system; and items specified in other sections of the specifications that are part of the SSSMR system. All material and workmanship deficiencies, system deterioration caused by exposure to the elements and/or inadequate resistance to specified design loads, water leaks and wind uplift damage shall be repaired. This warranty shall warrant and cover the entire cost of repair or replacement, including all material, labor, and related markups. The Contractor shall supplement this warranty with written warranties from the installer and system manufacturer, which shall be submitted along with Contractor's warranty; however, the Contractor shall be ultimately responsible for this warranty. The Contractor's written warranty shall be as outlined in the Corps Of Engineers Guide Specifications for WARRANTY FOR STRUCTURAL STANDING SEAM METAL ROOF (SSSMR) SYSTEM, and shall start upon final acceptance of the facility. It shall be required that the Contractor provide a separate bond in an amount equal to the installed total roofing system cost in favor of the owner (Government) covering the Contractor's warranty responsibilities effective throughout the five-year Contractor's warranty period for the entire SSSMR system as outlined above.

Manufacturer's Material Warranties: Contractor shall furnish, in writing, the following manufacturer's material warranties which cover all SSSMR system components such as roof panels, anchor clips and fasteners, flashing, accessories, and trim, fabricated from coil material.

A manufacturer's 2 year material warranty guaranteeing that all roof material specified herein will not rupture, structurally fail, fracture, deteriorate, or become perforated under normal design atmospheric conditions and service design loads. Liability under this warranty shall be limited exclusively to the cost of either repairing or replacing nonconforming, ruptured, perforated, or structurally failed coil material.

A manufacturer's 20-year exterior material finish warranty on the factory finish warranting that the finish, under normal atmospheric conditions at the site, will not crack, peel, or delaminate; chalk in excess of a numerical rating of eight as determined in ASTM D 4214 test procedures; or change color in excess of five CIE or Hunter Lab color difference (delta E) units in accordance with ASTM D 2244. Liability under this warranty is exclusively limited to refinishing with an air-drying version of the specified finish or replacing the defective coated material.

A roofing system manufacturer's 20-year system weather tightness warranty.

3.11.7 Sheet Metalwork: Flashing shall be installed in conformance with the SMACNA Architectural Sheet Metal Manual.

7. Insulation: 5cm (2 inch) thick extruded polystyrene rigid thermal insulation boards, conforming DIN, EN 13164 BS, EN 13164, k=0.2 @ 75 degrees F mean temperature, 2.82 kg/sq cm (40 lbs/sq in) compressive strength, hydrophobic, Type VI.

3.11.8 Insulation: In all habitable buildings and where heating or cooling is required provide the minimum insulation values as follows:

Walls R Value of (R 13)

Roof R Value of (R 38)

3.12 WINDOWS, DOORS & GLAZING

3.12.1 WINDOWS

3.12.1.1 Materials

A. Aluminum Extrusions: Provide horizontally sliding aluminum windows in all buildings to fit the masonry openings, with factory baked finish off–white to match doors. All windows shall be single 6 mm glazed unless otherwise noted (U.O.N). Windows openings shall be provided with insect screening permanently fixed to the exterior frame. Provide a locking device on the interior of each window. Provide anchors on each side of the frame into the adjoining masonry, 3 on each side, 2 top and bottom. Provide weather stripping system for all exterior windows and doors. Provide alloy and temper recommended by the window manufacturer for the strength, corrosion resistance, and application of required finish, meeting the DIN 1725 raw material requirements, but not less than 215 N/mm2 ultimate tensile strength and not less than 1.5 mm thick at any location for main frame and sash members.

B. Fasteners: Provide aluminum, nonmagnetic stainless steel, epoxy adhesive, or other materials warranted by the manufacturer to be non-corrosive and compatible with aluminum window members, trim, hardware, anchors, and other components of window units.

1. Reinforcement: Where fasteners screw-anchor into aluminum less than 0.125 inch thick, reinforce the interior with aluminum or nonmagnetic stainless steel to receive screw threads or provide standard non-corrosive pressed-in splined grommet nuts.

2. Exposed Fasteners: Except where unavoidable for application of hardware, do not use exposed fasteners. For application of hardware, use fasteners that match the finish of the member or hardware being fastened, as appropriate.

C. Anchors, Clips, and Window Accessories: Fabricate anchors, clips, and window accessories of aluminum, nonmagnetic stainless steel, or hot-dip zinc-coated steel or

iron complying with the requirements of DIN 1748; provide sufficient strength to withstand design pressure indicated. As a minimum provide 3 anchors on each side of the frame.

D. Compression-Type Glazing Strips and Weather stripping: Unless otherwise indicated, and at the manufacturer's option, provide compressible stripping for glazing and weather stripping such as molded EPDM or neoprene gaskets.

E. Sealant: For sealants required within fabricated window units, provide type recommended by the manufacturer for joint size and movement. Sealant shall remain permanently elastic non-shrinking, and non-migrating. Comply with Sealants of these specifications for selection and installation of sealants.

F. Wire Fabric Insect Screen shall be permanently fixed to the exterior, except for guard towers.

3.12.1.2 Hardware

A. General: Provide the manufacturer's standard hardware fabricated from aluminum, stainless steel, or other corrosion-resistant material compatible with aluminum and of sufficient strength to perform the function for which it is intended.

3.12.1.3 Fixed, Casement, Projected and Horizontal Sliding Windows

Provide window units meeting UL 752, level 5, but no less than 16 mm laminated single glazed. This standard shall apply to all window units within guard shack, guard house, guard tower, and guard rooms in Headquarters Building. Provide cam action sweep sash lock and keeper at meeting rails. All other glazing shall be minimum 6mm laminated single glazed. Refer to ASTM F-2248 for anchorage requirements.

3.12.1.4 Fabrication

Provide horizontally sliding aluminum windows with factory finish in all buildings to fit the masonry openings. Window openings shall be provided with insect screening permanently fixed to the exterior. Provide a locking device on the interior of each window. Provide anchors on each side of the frame into the adjoining masonry, 3 on each side. Provide weather stripping system for all exterior windows and doors.

3.12.1.5 Finishes

Apply baked enamel in compliance with paint manufacturer's specifications for cleaning, conversion coating, and painting.

1) Color: White meeting the requirements of DIN 50018

3.12.1.6 Inspection

Inspect openings before beginning installation. Verify that rough or masonry opening is correct and the sill plate is level. Masonry surfaces shall be visibly dry and free of excess mortar, sand, and other construction debris.

3.12.1.7 Installation

Comply with manufacturer's specifications and recommendations for installation of window units, hardware, operators, and other components of the work. Set window units plumb, level, and true to line, without warp or rack of frames or sash. Provide proper support and anchor securely in place. Set sill members and other members in a bed of compound or with joint fillers or gaskets, as shown, to provide weather tight construction. Refer to the Sealant sections for

compounds, fillers, and gaskets to be installed concurrently with window units. Coordinate installation with wall flashings and other components of the work.

3.12.1.8 Adjusting

Adjust operating sash and hardware to provide a tight fit at contact points and at weather stripping for smooth operation and a weather tight closure.

3.12.1.9 Cleaning

Clean aluminum surfaces promptly after installation of windows. Exercise care to avoid damage to protective coatings and finishes. Remove excess glazing and sealant compounds, dirt, and other substances. Lubricate hardware and other moving parts.

3.12.2 DOORS

All exterior doors (entry and exit doors) shall be heavy duty metal doors with metal frames. Interior door shall be hollow metal doors with hollow metal frames. All exterior doors shall be 44.5 mm hollow metal 1.30 mm (18 gauge) steel with rigid foam core insulation. Hollow metal frames shall be 1.30 mm (18 gauge) steel and comply with ASTM A-366 cold rolled 3-piece knock down or equal Steel doors, frames, and steel glazing frames shall be painted to match factory finish off-white window frames. Doors shall be 900 mm wide X 2100 mm high.

All glazed doors shall have 6mm tempered glazing in the upper half of the door. Heavy gauge metal exterior doors are required for security of unmanned buildings, such as water treatment building, power station, warehouses, and other buildings requiring higher security. Commercial duty lock sets and hardware shall be used on all doors. Install required louvers, as called for in paragraph 6, in the lower portion of the door. Provide (3) hinges on all doors. Hinges shall be the 5 knuckle type or equivalent. Provide door handles and locksets that can be locked with a key on all doors. All door locks shall have a thumb latch on inside of door such that no key is necessary to exit the room or building. Coordinate the final keying schedule with Contracting Officer prior to ordering lock sets. Generally each building should have 8 master keys fitting all locks, 8 sub-master keys fitting all exterior doors and 3 keys each for each interior door. Include 25% spare key blanks for the amount of keys provided per building. Provide numbering system identifying key to associated room door. All glazing in or adjacent to doors shall be tempered per IBC. Provide weather stripping system for all exterior doors.

All Interior doors shall be 44.5 mm hollow metal 1.00 mm (20 gauge) steel. Hollow metal frames shall be 1.30 mm (18 gauge) steel comply with ASTM A-366 cold rolled 3-piece knock down or equal Steel doors, frames, and steel glazing frames shall be painted. Door lites on interior doors shall be sized in accordance with building codes and positioned at a height above finished floor to allow vision on both sides. All doors in corridors shall have 150 mm X 600 mm X 6 mm minimum tempered glass lites 150 mm from door edge at lock side. Steel doors, frames, and steel glazing frames shall be painted to match factory finish off-white window frames. Doors shall be 900 mm wide X 2100 mm high.

3.12.2.1 PVC Doors

PVC doors and PVC door frames are for interior wet room use only. PVC may be used for bathrooms, shower rooms, and toilets rooms.

3.12.2.2 Steel Doors

SDI A250.8, except as specified otherwise. Prepare doors to receive specified hardware. Undercut where indicated. Exterior doors shall have top edge closed flush and sealed to prevent water intrusion.

3.12.2.2.1 Accessories

3.12.2.2.2 Louvers

3.12.2.2.2.1 Interior Louvers

SDI 111-C, Louvers shall be stationary sight-proof or lightproof type as required. Louvers for lightproof doors shall not transmit light. Detachable moldings on room or non security side of door; on security side of door, moldings to be integral part of louver. Form louver frames of 0.9 mm thick steel and louver blades of a minimum 0.6 mm. Louvers for lightproof doors shall have minimum of 20 percent net-free opening. Sight-proof louvers shall be inverted "V" blade design with minimum 55 or inverted "Y" blade design with minimum 40 percent net-free opening.

3.12.2.2.2.2 Exterior Louvers

Louvers shall be inverted "Y", "V" or "Z" type. Weld or tenon louver blades to continuous channel frame and weld assembly to door to form watertight assembly. Form louvers of hot-dip galvanized steel of same gage as door facings. Louvers shall have steel-framed insect screens secured to room side and readily removable. Provide aluminum wire cloth, 7 by 7 per 10 mm or 7 by 6 per 10 mm mesh, for insect screens.

3.12.2.2.3 Astragals

For pairs of exterior steel doors which will not have aluminum astragals or removable mullions, provide overlapping steel astragals with the doors. For interior pairs of fire rated and smoke control doors, provide stainless steel astragals complying with NFPA 80 for fire rated assemblies and NFPA 105 for smoke control assemblies.

3.12.2.2.4 Moldings

Provide moldings around glass of interior and exterior doors. Provide non-removable moldings on outside of exterior doors and on corridor side of interior doors. Other moldings may be stationary or removable. Secure inside moldings to stationary moldings, or provide snap-on moldings. Moldings shall interlock at intersections and shall be fitted and welded to stationary moldings.

3.12.2.2.5 Standard Steel Frames

SDI A250.8, except as otherwise specified. Form frames to sizes and shapes indicated, with welded corners or knock-down field-assembled corners. Provide steel frames for doors, transoms, sidelights, mullions, cased openings, and interior glazed panels, unless otherwise indicated.

3.12.2.2.6 Welded Frames

Continuously weld frame faces at corner joints. Mechanically interlock or continuously weld stops and rabbets. Grind welds smooth.

3.12.2.2.7 Mullions and Transom Bars

Mullions and transom bars shall be closed or tubular construction and shall member with heads and jambs butt-welded thereto or knock-down for field assembly. Bottom of door mullions shall have adjustable floor anchors and spreader connections.

3.12.2.2.8 Stops and Beads

Form stops and beads from 0.9 mm thick steel. Provide for glazed and other openings in standard steel frames. Secure beads to frames with oval-head, countersunk Phillips self-tapping sheet metal screws or concealed clips and fasteners. Space fasteners approximately 300 to 400 mm on centers. Miter molded shapes at corners. Butt or miter square or rectangular beads at corners.

3.12.2.2.9 Anchors

Provide anchors to secure the frame to adjoining construction. Provide steel anchors, zinc-coated or painted with rust-inhibitive paint, anchors not lighter than 1.2 mm thick.

3.12.2.2.10 Wall Anchors

Provide at least three anchors for each jamb. For frames which are more than 2285 mm in height, provide one additional anchor for each jamb for each additional 760 mm or fraction thereof.

a. Masonry: Provide anchors of corrugated or perforated steel straps or 5 mm diameter steel wire, adjustable or T-shaped;

b. Completed openings: Secure frames to previously placed concrete or masonry with expansion bolts

3.12.2.2.10.1 Floor Anchors

Provide floor anchors drilled for 10 mm anchor bolts at bottom of each jamb member. [Where floor fill occurs, terminate bottom of frames at the indicated finished floor levels and support by adjustable extension clips resting on and anchored to the structural slabs.

3.12.2.2.11 Fire and Smoke Doors and Frames

The requirements of NFPA 80 and NFPA 105 respectfully shall take precedence over details indicated or specified.

3.12.2.2.12 Weather-stripping, Integral Gasket

Black synthetic rubber gasket with tabs for factory fitting into factory slotted frames, or extruded neoprene foam gasket made to fit into a continuous groove formed in the frame, may be provided in lieu of head and jamb seals. Insert gasket in groove after frame is finish painted.

3.12.2.2.13 Hardware Preparation

Provide minimum hardware reinforcing gages as specified in ANSI A250.6. Drill and tap doors and frames to receive finish hardware. Prepare doors and frames for hardware in accordance with the applicable requirements of SDI A250.8 and ANSI A250.6. For additional requirements refer to BHMA A115. Drill and tap for surface-applied hardware at the project site. Build additional reinforcing for surface-applied hardware into the door at the factory. Locate hardware in accordance with the requirements of SDI A250.8, as applicable. Punch door frames, with the exception of frames that will have weather-stripping or lightproof or soundproof gasketing, to receive a minimum of two rubber or vinyl door silencers on lock side of single doors and one silencer for each leaf at heads of double doors. Set lock strikes out to provide clearance for silencers.

3.12.2.2.14 Door sweeps

Provide door sweep at all exterior doors.

3.12.2.2.15 Finishes

All surfaces of doors and frames shall be thoroughly cleaned, chemically treated and factory primed with a rust inhibiting coating as specified in SDI A250.8, or paintable A25 galvannealed steel without primer. Where coating is removed by welding, apply touchup of factory primer. Hinges: Exterior hinges shall have non-removable pins and be satin-chrome steel or stainless steel; Grade 1 anti-friction or ball bearing; and 3 each of 115 mm x 115 mm per leaf up to 900 mm wide door 125 mm x 125 mm for doors 900 mm to 1.200 mm wide. Interior hinges shall be Grade 1; antifriction or ball bearing; and 3 each of 115 mm x 115 mm per leaf up to 900 mm wide door 125 mm x 125 mm for doors 900 mm to 1200mm wide Hinges for labeled fire doors must be either steel or stainless steel. Hinges shall conform to ANSI/BHMA A156.1 and A156.7. Locksets, Latchets, Exit Devices, and Push and Pull Plates: Exterior doors shall have mortise locks conforming to ANSI/BHMA A156.13 for metal doors. Emergency exit devices shall be Grade 1, flush mounted type. Interior doors shall have mortise locksets conforming to ANSI/BHMA A156.13, Series1000, Grade 1. All locks and latchsets shall be the product of the same manufacturer. Locksets, padlocks and latchsets shall be provided, as required, with lever handles on each side. Provide heavy duty hasp and locks at all fuel storage tanks.

Cylinders: Lock cylinders shall comply with BHMA A156.5. Lock cylinder shall have six pins. Cylinders shall have key removable type cores. All locksets, exit devices, and padlocks shall accept same interchangeable cores. Closers: Closers shall be provided on all exterior doors and fire-rated doors. Closers shall conform to ANSI/BHMA A156.4, Grade 1. Closers shall be surface-mounted, modern type, with cover.
Thresholds: All exterior doors (except Mech/Elect rooms) shall be provided with marble thresholds. Doors at ceramic tile flooring shall be provided with marble thresholds and set marble threshold 13 mm above tile at all wet areas.

Door Stops: Doorstops shall be provided on all exterior and interior doors. Doorstops shall comply with ANSI/BHMA A156.16 and shall be satin chrome on bronze, Grade 1.

3.12.3 All hardware required for exiting, etc. shall be per Codes for exiting and shall comply with ANSI/BHMA and finishes shall match hardware specified above.

3.12.4 Master Keying
All submittals/shop drawings referring to keys and keying shall be submitted to engineering for evaluation. A key cabinet shall be provided with a capacity 50% greater than the number of key changes used for door locks. Location of Key cabinet shall as directed by Contracting Officer. Lock cylinder shall have not less than six (6) pins “Small Format Interchangeable Core (SFIC)" manufactured by Best Lock Company. A grand master keying system shall be provided from the factory. Locks shall be keyed in sets or subsets based on building groups as indicated in Section 01010 and submitted to for evaluation to engineering. Keys shall be supplied as follows:

Locks: 3 change keys each lock
Master keyed sets: 3 keys each set
Grand Master keys: 10 total

3.12.5 Fabrication and Workmanship

Finished doors and frames shall be strong and rigid, neat in appearance, and free from defects, waves, scratches, cuts, dents, ridges, holes, warp, and buckle. Molded members shall be clean cut, straight, and true, with joints coped or mitered, well formed, and in true alignment. Dress exposed welded and soldered joints smooth. Design door frame sections for use with the wall construction indicated. Corner joints shall be well formed and in true alignment. Conceal fastenings where practicable. On wraparound frames for masonry partitions, provide a throat opening 3 mm larger than the actual masonry thickness. Design other frames in exposed

masonry walls or partitions to allow sufficient space between the inside back of trim and masonry to receive calking compound.

3.12.5.1.1 Grouted Frames

For frames to be installed in exterior walls and to be filled with mortar or grout, fill the stops with strips of rigid insulation to keep the grout out of the stops and to facilitate installation of stop-applied head and jamb seals.

3.12.5.1.2 Installation

3.12.5.1.2.1 Frames

Set frames in accordance with SDI 105. Plumb, align, and brace securely until permanent anchors are set. Anchor bottoms of frames with expansion bolts or powder-actuated fasteners. Build in or secure wall anchors to adjoining construction. Backfill frames with mortar. When an additive is provided in the mortar, coat inside of frames with corrosion-inhibiting bituminous material. For frames in exterior walls, ensure that stops are filled with rigid insulation before grout is placed.

3.12.5.1.2.2 Doors

Hang doors in accordance with clearances specified in SDI A250.8. After erection and glazing, clean and adjust hardware.

3.12.5.1.2.3 Fire and Smoke Doors and Frames

Install fire doors and frames, including hardware, in accordance with NFPA 80.

3.12.5.1.3 Protection and Cleaning

Protect doors and frames from damage. Repair damaged doors and frames prior to completion and acceptance of the project or replace with new, as directed. Wire brush rusted frames until rust is removed. Clean thoroughly. Apply an all-over coat of rust-inhibitive paint of the same type used for shop coat. Upon completion, clean exposed surfaces of doors and frames thoroughly. Remove mastic smears and other unsightly marks.

3.12.5.2 Overhead Coiling Doors

Doors shall be fabricated from interlocking cold-rolled slats, designed to withstand building wind loading and be installed with wind locks. Slats shall be continuous for the width of the door. For doors not exceeding 4.27 m, slats shall be flat-profile design, with a depth of not less than 15.9 mm, a center to center width not more than 69.9 mm, and not less than a 1.21 mm uncoated thickness. Provide weather stripping for door-head and door jamb guides, and a bottom astragal. Weather stripping and astragal shall be natural rubber or neoprene rubber. Curtain jamb guides shall be fabricated from a combination of steel angles of sufficient size to retain curtain against the specified wind. Guides shall be fabricated from structural quality steel angles. Door shall have manufacturer's standard five pin tumbler locks; keyed. Doors shall be counterbalanced by an adjustable, steel, helical torsion spring mounted around a steel shaft in a spring barrel and connected to the door curtain with the required barrel rings. Hoods shall be fabricated from steel sheets with a minimum yield strength of 227.5 MPa.

Counterbalance-barrel components shall be as follows:

- Spring barrels shall be hot-formed structural-quality carbon steel, welded or seamless pipe. Pipe shall be of sufficient diameter and wall thickness to limit deflection to a maximum of 1/360 of the span.
- Counterbalance springs shall be oil-tempered helical steel springs designed with a safety

factor of 4. Springs shall be sized to counterbalance the weight of the curtain at any point of its travel, and shall be capable of being adjusted to counterbalance not less than 125% of the normal curtain load. Spring adjustment shall be arranged in such a way that the curtain need not be raised or lowered to secure the adjustment.

- Counterbalance shafts shall be case-hardened steel of the proper size to hold the fixed ends of the spring and carry the torsion load of the spring.

Barrel plugs shall be fabricated from cast steel machined to fit the ends of the barrel. Plugs shall secure the ends of the spring to the barrel and the shaft.

Barrel rings shall be fabricated from malleable iron of the proper involute shape to coil the curtain in a uniformly increasing diameter.

Shaft bearings shall be factory sealed ball bearings of the proper size for load and shaft diameters.

Door operators shall consist of an endless steel hand chain, chain-pocket wheel and guard, and a geared reduction unit of at least a 3:1 ratio. Required pull for operation shall not exceed 16 kg. Chain hoists shall have a self-locking mechanism allowing the curtain to be stopped at any point in its upward/downward travel and to remain in that position until moved to the fully open or closed position. Hand chains shall be cadmium-plated alloy steel with a yield point of at least three times the required hand-chain pull. Pretreated zinc-coated steel sheets shall be given the manufacturer's standard prime coat and an enamel finish coat applied to the exterior face after forming.

After installation, doors, track, and operating equipment will be examined and tested for general operation and weather against the specified wind pressure, and weather resistance. Doors that fail the required tests shall be adjusted and retested. Doors that have been adjusted and fail subsequent tests shall be removed and replaced with new doors at no additional cost.

3.12.6 GLAZING

ASTM C 1036 or ASTM C 1172 or equal.

3.12.6.1 Temper Glass

Tempered glass shall be kind FT fully tempered flat type. Class 1 clear, condition A uncoated surface, Quality q3-glazing select, conforming to ASTM, DIN, BS or EN standards. Color shall be clear.

3.12.6.2 Glazing Accessories

3.12.6.2.1 Sealant

Sealant shall be elastomeric conforming to ASTM, DIN, BS, or EN standards. Type S or M, Grade NS, Class 12.5, Use G, of type chemically compatible with setting blocks, preformed sealing tape and sealants used in manufacturing insulation glass. Color of sealant shall be as selected from manufacturer's full range of standard colors by Contracting Officer.

3.12.6.2.2 Glazing Gaskets

Glazing gaskets shall be extruded with continuous integral locking projection designed to engage into metal glass holding members to provide a watertight seal during dynamic loading, building movements and thermal movements. Glazing gaskets for a single glazed opening shall be continuous one-piece units with factory-fabricated injection-molded corners free of flashing and burrs. Glazing gaskets shall be in lengths or units recommended by manufacturer to ensure

against pull-back at corners.

3.12.6.2.3 Fixed Glazing Gaskets

Fixed glazing gaskets shall be closed-cell (sponge) smooth extruded compression gaskets of cured elastomeric virgin neoprene compounds conforming to ASTM, DIN, BS. Or EN standards.

3.12.6.2.4 Wedge Glazing Gaskets

Wedge glazing gaskets shall be high-quality extrusions of cured elastomeric virgin neoprene compounds, ozone resistant, conforming to ASTM, DIN, BS, or EN standards.

3.12.6.2.5 Putty and glazing Compound

Glazing compound shall conform to ASTM, DIN, BS, or EN standards for face-glazing metal sash. Putty shall be linseed oil type conforming to DIN, BS, or EN standards for face-glazing primed wood sash. Putty and glazing compounds shall not be used with insulating glass or laminated glass.

3.12.6.2.6 Setting and Edge Blocking

Neoprene setting blocks shall be dense extruded type conforming to ASTM, DIN, BS, or EN standards. Silicone setting blocks shall be required when blocks are in contact with silicone sealant. Profiles, lengths and locations shall be as required and recommended in writing by glass manufacturer.

3.12.6.2.7 Preparation

Openings and framing systems scheduled to receive glass shall be examined for compliance with glass manufacturer’s recommendations including size, squareness, offsets at corners, presence and function of weep system, face and edge clearance requirements and effective sealing between joints of glass-framing members. Detrimental materials shall be removed from glazing rabbet and glass surfaced and wiped dry with solvent. Glazing surfaces shall be dry and free of frost.

3.12.6.2.8 Installation

Glass and glazing work shall be performed in accordance with, glass manufacturer’s instructions and warranty requirements. Glass shall be installed with factory labels intact and removed only when instructed. Edges and corners shall not be ground, nipped or cut after leaving factory. Springing, forcing or twisting of units during installation will not be permitted.

3.12.6.2.9 Cleaning

Upon completion of project, outside surfaces of glass shall be washed clean and the inside surfaces of glass shall be washed and polished in accordance with glass manufacturer’s recommendations.

3.12.6.3 Protection

Glass work shall be protected immediately after installation. Glazed openings shall be identified with suitable warning tapes, cloth, or paper flags, attached with non-staining adhesives. Reflective glass shall be protected with a protective material to eliminate any contamination of the reflective coating. Protective material shall be placed far enough away from the coated glass to allow air to circulate to reduce heat buildup and moisture accumulation on the glass. Glass units which are broken, chipped, cracked, abraded, or otherwise damaged during construction

activities shall be removed and replaced with new units.

3.13 FINISHES

3.13.1 The exterior of all buildings shall be plaster over CMU, plaster over concrete, or Plaster over furring over rigid insulation. No gypsum board material is to be used in this project. Install new plaster in 2 coats which shall have color integral with the finish. The first coat shall be a scratch coat approximately 1 cm thick. Allow 7 days to cure. The second coat shall be finish plaster, smooth finish, approximately 1 cm thick. Allow 7 days to cure before painting. Stucco showing over sanding, cracks, blisters, pits, checks, discoloration or other defects is not acceptable. Defective plaster work shall be removed and replaced with new plaster at the expense of the Contractor. Patching of defective work will be permitted only when approved by the Contracting Officer. All exterior color finish shall be integral with the stucco finish. No painted stucco shall be permitted due to minimize future maintenance. Color to be selected by the Contracting Officer from the color board provided by the Contractor.

3.13.2 Interior walls shall be plaster applied in a similar manner as exterior stucco. Paint with 2 coats of semi-gloss off-white with less than .06% lead by weight color to be selected by the Contracting Officer from the color board provided by the Contractor.

3.13.3 Ceilings of Barracks, and Headquarters, shall be plaster applied in 2 coats over wire mesh, which is to be stapled to the 20 mm x 60 mm wood battens. Paint ceiling with 2 coats of flat white, with less than .06% lead by weight. Gypsum board may be used in lieu of plaster but framing supports for Gypsum board shall be as follows: For ½" thick gypsum board structural fastener supports shall be not further apart than 400 mm. If gypsum board is thicker follow guidelines in ASTM C 840 for supports and fastener frequency.

3.13.4 Ceilings of Dining Facility shall be exposed concrete painted with 2 coats of flat white, with less than .06% lead by weight.

3.13.5 Paint all exposed wood fascia, soffits, and doors with 2 coats of gloss enamel, white.

3.13.6 Exposed exterior steel trim, frames, doors and pipe railings: Paint with one coat oil-based primer, with 2 coats of oil-based alkyd gloss enamel, color to be selected by the Contracting Officer from the color board provided by the Contractor.

3.13.7 Exposed wood trim, frames and doors: Paint with one coat oil-based primer, 2 coats of gloss enamel, color to be selected by the Contracting Officer from the color board provided by the Contractor

3.13.8 Tile: Tile work shall not be performed unless the substrate and ambient temperature is at least 10 degrees C and rising. Temperature shall be maintained above 10 degrees C while the work is being performed and for at least 7 days after completion of work. Upon completion, tile surfaces shall be thoroughly cleaned in accordance with manufacturer's approved cleaning instructions. Acid shall not be used for cleaning glazed tile. Floor tile with resinous grout or with factory mixed grout shall be cleaned in accordance with instructions of the grout manufacturer. After the grout has set, tile wall surfaces shall be given a protective coat of a non-corrosive soap or other approved method of protection.

3.13.8.1 Floors in wet areas shall be ceramic 150 mm x 150 mm terrazzo tile with thin set mortar. Joints shall be 2-3 mm. Waterproof gray grout shall be applied the full depth of the tile. Floors shall slope, minimum 1/50, to floor drains. Slope shall be obtained with sloping mortar bed of minimum 20 mm thickness. Provide continuous waterproofing membrane beneath sloping mortar bed, turn up wall 300 mm behind wall base. Membrane shall be fully sealed at joints and shall shed water into body of floor drain.

Color of tile shall be selected by the Contracting Officer from samples provided by the Contractor.

3.13.8.2 Floors in administration areas, living quarters, corridors, and all rooms unless otherwise stated shall be **300 mm x 300 mm terrazzo tile with thin set mortar**. Joints shall be 2-3 mm. Waterproof gray grout shall be applied the full depth of the tile. Color of tile shall be selected by the Contracting Officer from samples provided by the Contractor.

3.13.8.3 Walls in wet areas shall be tiled with 150 mm x 150 mm glazed ceramic tile up to 2 meters above the floor to include interior of toilet stalls, showers and behind sinks. Joints shall be 2-3 mm. Waterproof gray grout shall be applied full depth of the tile. Grout shall cure for 72 hours and then be sealed with a commercial grout sealant in two coats. Color of tile shall be selected by the Contracting Officer from samples provided by the Contractor.

3.13.8.4 The ablution drain areas shall be recessed below the floor level 200 mm and lined with ceramic tile. Ceramic tile shall extend up the wall past the water spigots to a height of 2 m above finished floor. Seats shall be formed concrete with terrazzo tile finish to match the floor, 300 mm x 300 mm x 300 mm high finished dimensions. Color of ceramic tile shall be selected by the Contracting Officer from samples provided by the Contractor. Spacing between tiles shall be similar to terrazzo tile.

3.13.8.5 All floors in POL Storage buildings, and Battery rooms, shall be completely cleaned and the concrete painted with an epoxy floor paint formulated for that application. Color to be selected by the Contracting Officer from samples provided by the Contractor.

3.13.8.6 All other floors are to be completely cleaned and sealed epoxy. Color to be selected by the Contracting Officer from samples provided by the Contractor.

3.13.8.7 Kitchen in Dining Facility shall be covered with terrazzo flooring. Walls in kitchen shall be ceramic tile up to 2 m above finished floor. Floor in Dining area shall be **sealed concrete**.

3.14 SPECIALTIES

3.14.2 Mirrors

0.6 m x 0.9 m, 6 mm plate glass, shall be mounted above all lavatories. Mount bottom of mirrors 1.1m above finished floor.

3.14.3 Toilet Paper Holders

Toilet paper holders, stainless steel, shall be installed approximately 200 mm above floor in Eastern Toilets.

3.14.4 Shower Curtain Rods & Shower Curtain

Shower curtain rods, stainless steel, heavy duty, 18 gauge shall be mounted between the screen walls of each shower stall. Mount rod at 2.0 m above finished floor. Stainless steel rod shall be securely supported by the end supports embedded in concrete. Provide a shower curtain with heavy duty metal support rings for each shower stall.

3.14.5 Paper Towel Dispensers

Paper towel dispensers, 0.683 mm Type 304 stainless steel, surface mounted. Furnish tumbler key lock locking mechanism.

3.14.6 Light Duty Metal Shelf

Provide a 600 mm long, light duty stainless steel shelf and brackets over each lavatory.

3.14.7 Robe hooks on all toilet and shower stalls required.

3.14.8 COLD STORAGE ROOMS
DFAC'S: See Appendix A for DFAC NO. 1. Provide 18 sq meters DFAC NO. 2. Provide 9 sq meters in DFAC NO. 3.

3.14.8.1 Contractor shall provide the Contracting Officer shop drawings for approval of appropriately sized walk-in refrigerators and freezer to include proposed manufacturer, construction details, manufacturer's instructions, evacuation and charging procedures, operation and maintenance date, start-up and initial operational tests.

3.14.8.2 Walk-in coolers shall be panel type modular construction. Doors shall be swing type. Refrigeration equipment shall be remote located on the exterior of the building. Provide a temperature/ alarm system. Provide interior lighting with exterior switch. Floors of cool rooms shall be insulated panelized construction from the manufacturer of the cool rooms. The concrete floor will not be depressed.

3.14.8.3 Refrigeration piping shall be annealed or hard drawn seamless copper tubing in conformance with ASTM B280. Refrigeration systems shall be remote type.

3.14.8.4 Electrical characteristics shall match local power 400v/3ph/50Hz and 220v/1ph/50Hz.

3.14.8.5 Preservation and packing shall be commercial grade.

3.14.8.6 Provide a recording thermometer.

3.14.8.7 Provide temperature alarm with connector to remote temperature alarm.

3.14.8.8 Provide outdoor condensing unit cover and security fence or wall to protect outside units. Provide condensing unit outdoor controls for operation down to –18 degrees C ambient temperature.

3.14.8.9 Refrigeration Equipment

Refrigeration equipment shall be designed for remote installation. Design units for 16 to 18 hour operation at the indicated interior temperature in –18 degree C ambient temperature. Capacities, air delivery, and dimensions shall be as indicated. Remote condensing units shall be factory fabricated and rated in accordance with UL303 and ARI 365. Provide with motor, air cooled condenser, receiver, compressors, mounted on a common base. Compressors shall be hermetic type. Evaporators shall be factory fabricated and rated in accordance with UL 412 and ARI 420. Forced convection, unit cooler type, made to suspend from the ceiling panels, with forced air discharged parallel to the ceiling. Provide with air circulating motor, multi-fin tube type coil and grille assembled within a protective housing. Air circulation motors shall be lifetime sealed, and the entire unit-cooler assembly shall be accessible for cleaning. Provide a drip pan and drain connection. When the cold storage room is used for freezing, provide an automatic electric heat defrosting system. Provide a timer type defrost controllers.

3.14.8.9.1 Provide condensate drain lines and drains below freezer floors with electric heating cable, thermostatically controlled to maintain 10 degrees C at zero flow rate. Cable shall be sized in accordance with manufacturer's recommendations.

3.14.8.9.2 Submit a copy of installation instructions to the Contracting Officer covering both assembly and installation of the refrigeration equipment prior to start of work. Start up and initially operate the systems upon completion of the installation of the equipment and refrigerant piping. Adjust the safety and automatic controls to place them in operating sequence. Record manufacturer's recommended readings hourly. Operational test shall cover a period of not less than 24 hours. Upon completion of Operational test the systems shall be performance tested. Test duration shall not be less than 8 hours. Test shall include the following information to be in the report with conclusions regarding the adequacy of the systems:

Time, dates and duration of tests:

- Inside dry-bulb and wet-bulb temperatures maintained in each room during the tests employing recording instruments calibrated before the tests.

- Outside dry-bulb and wet-bulb temperatures obtained from recording instruments calibrated and checked hourly with a sling psychrometer.

- Evaporator and condenser entering and leaving temperatures taken hourly with the compressors in operation.

- The make, model, and capacity of each evaporator and condensing unit.

- Voltmeter and ammeter readings for condensing units and evaporators.

3.14.8.9.3 Provide chart showing the layout of the refrigeration systems, including piping, valves, wiring, and control mechanisms. Submit printed instructions covering the maintenance and operation of refrigeration equipment. Tag shutoff valves in accordance with the instructions. Provide any special tools necessary for repair and maintenance of the systems.

3.14.8.9.4 Remove any packing material. Wash and clean floors, walls, ceilings and equipment inside of cool rooms. Wash and clean exposed surfaces on outside.

3.14.8.9.5 Upon completion of the work and at a time designated by the Contracting Officer, provide instruction to designated personnel in the operation and maintenance of each refrigeration system. The period of instruction shall not be less than one 8-hour day.

3.14.9 Provide and install propane burning cooking stoves and chimneys in DFAC NO. 1. and Temporary DFAC. Stove is to be site built concrete faced with terrazzo tiles color to match flooring. Provide 1cm steel cooking top as described above.

3.14.10 Provide Dish Tables with preparation sinks in all DFAC'S: See Appendix A for DFAC NO. 1 floor plan, Provide 18 meters of Dish Tables with preparation sinks DFAC NO. 2. Provide 9 meters of Dish Tables with preparation sinks in DFAC NO. 3. 1.9mm (14 gauge) stainless steel dish table. Provide 2cm rolled front rim on 3cm high drip guard on front and sides. Provide 25cm high rear splash. Legs shall be 3cm diameter, 1.6mm (16-gauge) stainless steel with adjustable feet. Sinks are integral 50cm x 50cm x 30cm deep, 5 each. Provide spray hose next to each set of sinks.

3.14.11 Provide Stainless Steel Worktables in DFAC'S: Provide 9 each in DFAC NO. 1, Provide 2 each in DFAC NO. 2. Provide 1 each in DFAC NO. 3. 14 gauge stainless steel worktables. Front and rear to have bull nose edges with square ends. Legs are 3cm diameter, 16-gauge stainless steel with adjustable feet. Provide shelf under table. Tables are 9,000 mm x 300 mm.

3.14.12 Provide stainless steel open slotted shelves, 1.9mm (14 gauge). Each set of shelves is 100cm wide x 50cm deep x 1.8m high, 4 tier, with 3cm diameter adjustable stainless steel legs. Shelves are adjustable. Provide 8 of the sets with lockable 12.5cm diameter swivel rolling casters. Provide 40 each in DFAC NO. 1. Provide 10 each in DFAC NO. 2. Provide 6 each in DFAC NO. 3.

3.15 DESIGN-BUILD GUIDANCE

3.15.1 While all facilities under this Contract are design-build, several buildings will be required under this Contract for which there are no conceptual drawings provided. These will be design-build buildings based on requirements developed for site utilities by the Contractor. These buildings are the Power Plant, Water Treatment Building, sewage treatment plant, and associated structures

3.15.2 Power Plant: The Power Plant building will be a slab on grade with a metal pre-engineered building, 4-meters high, or as required, clear height, with a clear span, as required, to cover all equipment. This building shall be Pre-engineered Metal Building with upper wall and roof constructed of insulated metal panels. The lower walls shall be reinforced CMU.

3.15.3 Water Treatment Building: The Water Treatment Building is envisioned to be a CMU building, with slab on grade, minimum 3-meters high, with insulated metal roof.

3.15.4 Sewage Aerated Stabilization Pond

This aerated stabilization pond is envisioned to be located on the lower elevation of the site. The discharge shall be into a holding pond with subsequent drainage to an adjacent wadi/dry creek bed. See paragraph 2. CIVIL for further details.

3.16 STANDARDS

The Contractor should use the following American standards to provide sound structural design. The Contractor shall follow American Concrete Institute Standards for design and installation of all concrete structures.

Concrete For Slabs	21 MPa (f'c) cylinder strength @ 28 days (ASTM-. C 31M)
Structural Concrete	28 MPa (fc) cylinder strength @ 28 days (ASTM-. C 31 M)
Steel Reinforcement	4218.0 kg./sq.cm(Fy= 60.0 ksi),yield strength.
Welded Wire Fabric	ASTM A185
Anchor Bolts	ASTM A307 using A36 steel.
Concrete Masonry Units	ASTM C90, Type I (normal wt, moisture Cntrl).
Mortar	ASTM C270, Type S (Ultimate compressive strength of 130.0 kg/sq. cm.)
Proportion	1 part cement, 0-1/2 part lime and 4-1/2 parts aggregate
Grout	ASTM C476 (Slump between 200 mm to 250 and Compressive
Strength	14 MPa (2000 psi) at 28 days.
Joint Reinforcement	Standard 9 gage minimum, Ladder Type
Structural Steel	ASTM A36: 2530.0 kg./sq.cm (Fy = 36,000psi)
Welding	AWS (American Welding Society) D1.1-2002.

4 STRUCTURAL

4.11 GENERAL

The project consists of various structures. The new buildings shall be provided with a reinforced concrete slab foundation that is properly placed on suitable compacted ground area and shall be in accordance with the recommendations from the geotechnical investigation. The reinforced concrete foundation shall be designed by the Contractor. Building foundations shall be founded a minimum of 800 mm below grade. Most Buildings shall be insulated K-Span metal building built on reinforced stem wall. The single-story buildings constructed using insulated reinforced fully grouted CMU (concrete masonry units) load bearing walls with steel beams supporting the roofing system. Several new facilities will be constructed using insulated pre-engineered metal building systems with metal roof deck and siding and with reinforced CMU exterior masonry walls. The ground floor slab shall be minimum 150 mm thick reinforced concrete. Slab shall be placed on clean vapor barrier over 150 mm thick capillary water barrier on compacted soil.

4.12 DESIGN

Design shall be performed and design documents signed by a registered professional architect and/or engineer. Calculations shall be in SI or Metric units of measurements. All components of the building shall be designed and constructed to support safely all loads without exceeding the allowable stress for the materials of construction in the structural members and connections.

4.13 DEAD AND LIVE LOADS

Dead loads consist of the weight of all materials of construction incorporated in the buildings. Live loads used for design shall be in accordance with the Structural load Data, Unified facilities Criteria (UFC), UFC 3-310-01.

4.14 WIND LOADS

Wind loads shall be calculated using a "3-second gust" wind speed of 135 km/hr.

4.15 SEISMIC

The building and all parts thereof shall be designed for the seismic requirements as defined by Structural Load Data, UFC 3-310-01. Spectral ordinates shall be Ss = 1.28g and S1 = 0.51g. “

4.16 STRUCTURAL CONCRETE

Concrete structural elements shall be designed and constructed in accordance with the provisions of the American Concrete Institute, Building Code Requirements for Structural Concrete, ACI 318, latest edition. A minimum cylinder 28 day compressive strength of 21 MPa (3000 psi) shall be used for design and construction of all concrete, except that 24 MPa (3500 psi) shall be used for sprayed concrete applications. Reinforcing steel shall be deformed bars conforming to American Society for Testing and Materials (ASTM) publication ASTM a 615, Deformed and Plain Billet-Steel Bars for Concrete Reinforcement. Concrete at or below grade shall have maximum water-cement ration of 0.40. No concrete shall be placed when the ambient air temperature exceeds 32 degrees C (90 degrees F) unless an appropriate chemical retardant is used. In all cases when concrete is placed at 32 degrees C (90 degrees F) or hotter it shall be covered and kept continuously wet for a minimum of 48 hours. Concrete members at or below grade shall have a minimum concrete cover over reinforcement of 75 mm (3 inch).

4.17 MASONRY

Masonry shall be designed and constructed in accordance with the provisions of Building Code Requirements for Masonry Structures, ACI 530/ASCE 5/TMS 402, latest editions. Mortar shall be Type S and conform to ASTM C 270, latest edition. Masonry shall not be used below grade, unless for fully grouted and reinforced foundation stem walls. All cells of exterior CMU walls shall be fully grouted and reinforced.

4.18 STRUCTURAL STEEL

Structural steel shall be designed and constructed in accordance with the provisions of American Institute of Steel Construction (AISC), Specifications for Structural Steel Buildings, 9th Edition. Design of cold-formed steel structural members shall be in accordance with the provisions of American Iron and Steel Institute (AISI), Specifications for Design of Cold-Formed Steel Structural Members.

.

4.19 METAL DECK

Deck units shall conform to SDI Pub. No. 29. Panels of maximum possible lengths shall be used to minimize end laps. Deck units shall be fabricated in lengths to span three or more supports with flush, telescoped or nested 50 mm (2 inch) laps at ends, and interlocking, or nested side laps. Metal deck units shall be fabricated of steel thickness required by the design and shall be galvanized.

4.20 OPEN WEB STEEL JOIST

Open web steel joists shall conform to SJI Specifications and Tables. Joists shall be designed to support the loads given in the standard load tables of SJI Specifications and Tables.

4.21 FOUNDATIONS

Foundations shall be in accordance with the Geotechnical requirements of this RFP.

5 GEOTECHNICAL

Existing geotechnical information is not available at the project site. Any site-specific geotechnical data required to develop foundations, materials, earthwork, and other geotechnical related design and construction activities for this project shall be the Contractor's responsibility. The Contractor shall develop all pertinent geotechnical design and construction parameters by appropriate field and laboratory investigations and analyses. The Contractor shall produce a detailed geotechnical report containing field exploration and testing results, laboratory testing results, evaluations, recommendations, calculations and descriptive supporting text. Information in the report shall include, but not limited to: existing geotechnical (e.g. surface and subsurface) conditions, location of subsurface exploration logs, exploration point, foundations selected, bearing capacity, pavement design criteria (e.g. CBR values, K values), ground-water levels, and construction materials (e.g. concrete cement, asphalt, and aggregates). Two copies of the detailed geotechnical report shall be submitted to the Contracting Officer.

5.1 Geotechnical Qualifications.

A geotechnical engineer or geotechnical firm responsible to the Contractor shall develop all geotechnical engineering design parameters. The geotechnical engineer or geotechnical firm shall be qualified by: education and a 4 year degree (or equivalent) in geotechnical engineering from a recognized university; professional registration as acceptable to the Contracting Officer; and a minimum of ten (10) years of experience in geotechnical engineering design.

5.2 Design Certification.

The Contractor shall certify in writing that the design of the project has been developed consistent with the site-specific geotechnical conditions. The certification shall be stamped by the geotechnical engineer of the geotechnical firm and shall be submitted with the final design.

6 MECHANICAL

6.1 GENERAL

The Contractor shall design, supply, fabricate and install new HVAC systems and special mechanical systems in the facilities identified in Section 01010 Scope of Work and as described herein. Heating, Ventilation, and Air-Conditioning (HVAC) requirements for typical facilities are described hereinafter in paragraph 6.0 Mechanical. The contractor shall be responsible for complete design and construction of all HVAC and special mechanical systems as required for the respective buildings. The Contractor shall submit cooling and heating load analysis for each space using recognized computer programs, such as Trane “Trace” or Carrier “HAP” software.

The work also includes the delivery to site, erection, setting to work, adjusting, testing and balancing, and handing over in full operating conditions all of the HVAC equipment and associated mechanical works. All mechanical/electrical controls accessible by the general public shall be lockable and tamper proof.

6.2 SPECIALIST SUB-CONTRACTORS QUALIFICATIONS

The heating/ventilation and air-conditioning works shall be executed by an air-conditioning specialist sub-contractor experienced in the design and construction of these types of systems.

6.3 CODES, STANDARDS AND REGULATIONS

The equipment, materials and works covered under the heating, ventilation and air-conditioning services shall conform to the referenced standards, codes and regulations where applicable except where otherwise mentioned under each particular clause.

6.4 DESIGN CONDITIONS

Heating & Cooling of all habitable buildings 250 square meters and larger (barracks, DFAC, , repair shops, training bldg. etc.) shall be by an integrated, diesel-fired furnace & evaporative cooler Unit, as indicated in RFP. The installed heat output shall be a minimum of 0.15 tkW/m2 (0.20 for DFAC) of floor area. Evaporative Cooling shall be at a minimum rate of 20 m3/h (25 for DFAC) outside air flow / m2 floor area.
Contractor will install galvanized steel ducts for supply and return of warm/cool air distribution to all areas of the building. Maximum duct air velocity is 6.0 m/s (1180 fpm)
Design Criteria
Insulated walls of R = 3.5 m2-‘C/watt, Roofs of R = 5.5 m2-‘C/watt: Average 3 m2 floor / person: Summer cooling 100% outside air. Winter outside air ventilation is 15 m3/h/person (20 for defac) which is 5 m3/h/m2 floor (6.7 for defac) : Summer outside air ventilation (cooling) is 60 m3/h/person (80 for defac) which is 20 m3/h/m2 floor (27 for defac).
Conversion factors: Btu/h = 3413 * tkW. CFM = 0.589 – m3/h. R(h-sf-‘F/Btu) = 5.68 * R(m2-‘C/watt)

6.4.1 Outside Design Conditions

Kunduz area:
[Latitude – (approx.) 36 deg. North
Longitude – (approx.) 68 deg. East
Elevation – (approx.) 432 M (1417 ft.)
Summer – 38.8 deg C (102 deg F) Dry Bulb (DB) [& 6.1 deg C (43 deg F)] Wet Bulb (WB)]
Winter – (-1.6 deg C/29 deg F)
Daily Range – data unknown]

INDOOR DESIGN CONDITION

Summer – 23.9 deg C (75 deg F) & 50% RH for rooms with packaged air conditioning units
Buildings served by the evaporative cooler shall be limited to EDB minus (82% of the EWBD)
Winter – 21.1 deg C (70 deg F)

6.4.2 NOISE LEVEL

Noise levels inside occupied spaces generated by HVAC systems shall not exceed NC 35.

6.4.3 INTERNAL LOADS

a. Occupancy: refer to Section 01010.
b. Lighting (Fluor.): 21.5 W/m2 (2 W/Ft2) maximum (however lighting levels shall meet minimum requirements)
c. Outdoor Air: 34 CMH/Person (20 CFM) or “51 CMH/bedroom (30 CFM/bedroom)”; Latrine – 85 CMH/WC or Urinal (50 CFM) exhaust. Maintain negative pressure in latrine areas where mechanical HVAC is required.
d. Building Pressurization: 1.3 mm W.G. (0.05 in W.G.) (only applicable for buildings provided with diesel-fired furnace & evaporative cooler unit)

6.4.4 THERMAL PERFORMANCE

Assemblies shall meet the requirements of TI-800, Design Criteria, UFC 3-400-01 Design: Energy Conservation, and ASHRAE Standard 90.1, latest editions, but shall meet the following minimum requirements:

Assembly	Minimum Thermal Value
exterior walls (above grade)	RSI 2.288 (**R 13**)
ceilings/roof	RSI 6.688(**R 38**)
basement wall	RSI
floor (over unheated space)	RSI 5.28 (**R 30**)
exterior doors	RSI 0.25 (R 1.43)
exterior windows/ (glazing within doors)	RSI 0.308(R 1.75)
Skylights	RSI 0.18 (R 1.02)

6.4.5 Building Pressurization

Buildings provided with the diesel-fired furnace & evaporative cooler unit shall be designed to maintain positive pressure inside the building with respect to the exterior to minimize sand and dirt infiltration. This shall be achieved by reducing exhaust air (i.e. closing: dampers, doors, windows) so that make-up air works against a positive pressure of 1.0 to 2.0 mm W.G.

Kitchen ventilation design shall be in accordance with NFPA 92A, NFPA 96, NFPA 204, NFPA

211, and other standards listed in this document as appropriate.

6.4.6 Ventilation Standards

Mechanical/Electrical Rooms: Mechanical ventilation sufficient to limit space temperature and to remove heat given out by operating equipment.

Maintenance shops and similar spaces that use solvents and oils shall be provided with mechanical exhaust air systems. The systems shall consist of centrifugal fan, ductwork, exhaust grills, and interlock controls.

Toilet and Wash Area: Minimum exhaust ventilation shall be the larger of 35 m3/h / m2 floor or 85 m3/h / toilet (WC). At extreme cold in winter these values can be reduced for short periods to 10 m3/h / m2 or 40 m3/h / toilet (WC) to conserve heat.

Kitchen Hood Exhaust and Make-up Air: As required and as per Kitchen design specialist and equipment supplier requirements. The designer shall take special note that multiple large propane stoves will be installed in the kitchen. The steam generated by the local style of cooking with large pots is immense in comparison to western standards, and the additional need for ventilation must be accounted for in the design. Also, the cooks are accustomed to standing on top of the stoves in order to stir the large cauldrons of food. This common cooking practice should be taken into consideration when designing the exhaust hood. The height of the hood above the stovetop should be such that a man of average stature could stand upright without risk of hitting his head on the hood. Design per NFPA 92A, 96, 204, and 211. Make up air intake shall be integral with the hood system or be located as close to the exhaust intake to prevent cold drafts.

6.4.6 Air Intakes

To reduce sand and dirt migration, outside air intakes shall be located as high as possible within architectural constraints. The intakes shall be sized so that free air velocities are below 2.5 m/s (500 fpm). For inhabited buildings locate all air intakes at least 1.5 (center-line of intake) meters above the ground.

6.5 EQUIPMENT

6.5.1 Filtration

6.5.1.1 Outside Air Intakes. All outside air intakes shall be through weatherproof louvers with a bird screen. Wall intakes and roof hoods shall have 50mm thick permanent washable metal mesh type filters as first stage for filtration of dust.

6.5.1.2 Medium efficiency (30 percent, as defined by ASHRAE 52 Dust Spot Efficiency Criteria) filters, the 50 mm (2 –inch) thick disposable panel type, shall be the second stage of filtration.

6.5.1.3 High efficiency (80-85 percent, as defined by ASHRAE 52 Dust Spot Efficiency Criteria) filters, 300 mm (12-inch) deep cell type, shall be provided as the final stage of filtration in special maintenance and inspection operations, food preparation, health care facilities, electronic facilities and corrosion control facilities.

6.5.2 Ventilation and Exhaust Fans

All fans used for ventilation shall be selected for required performance and for minimum noise level. Unit-mounted supply and exhaust fans shall be centrifugal forward curved, or airfoil fans

with non-overloading characteristics of high efficiency and quiet running design. The fans shall be heavy-duty type with durable construction and proven performance in arid and dusty desert environment. Each exhaust fan shall be provided with gravity dampers and shall be complete with vibration isolators, external lubricators, accessories and controls necessary for specified sequence of operation.

6.5.3 Refrigeration System. Only used for buildings less than 250 square meters and select offices and conference rooms. All other buildings are cooled by evaporative-cooling modules, which are a part of the diesel fired heating system.. Direct Expansion (DX) air-cooled condensing unit shall be located outdoors and mounted slab-on-grade. Grade mounted equipment shall be protected from the wind-blown sand by a 1-meter high enclosure walls or by mounting condensing unit using 1-meter high elevated steel support platform. Each unit shall consist of weatherproof casing, compressor(s), condenser coil, condenser fans, motor and appurtenances. Compressor shall be of the hermetic or semi-hermetic reciprocating type. Refrigeration system shall be connected to the refrigeration circuit of the split system air-conditioning unit.

6.5.4 Unitary (ductless split) DX Air Conditioning Units

If specifically required, ductless split units shall be unitary in design and factory manufactured ready for installation. Evaporator unit shall consist of a DX evaporator cooling coil, blower, electric heater and washable filter all mounted in a housing finished for exposed installation. Cooling coil condensate piping shall route to and discharge to the sanitary sewer system or to the ground. The condensing unit will contain compressor, condenser coil, and all internal controls/fittings complete to include a weatherized housing. Copper refrigerant suction and liquid piping shall be sized, insulated and installed in accordance to unit manufacture recommendations. Unit temperature control shall include wall mounted adjustable thermostat, blower on-off-auto switch and heating-cooling change over control.

6.6. Ductwork

Air shall be distributed from Heat-Cool Unit in Appendix to achieve proper airflow throughout the facility by means of air distribution ductwork. Air distribution system shall be comprised of ductwork, fittings, grilles, registers, and/or diffusers. Ductwork shall be constructed of galvanized steel or aluminum sheets and installed as per SMACNA “HVAC Duct Construction Standards (Metal and Flexible).” Flexible non-metallic duct may be used for final unit/diffuser connection in ceiling plenums. These flexible duct run-outs shall be limited to 3 meters in length. Duct insulation shall be provided for all supply ductwork and for return ductwork not located within the conditioned area i.e. outdoors.

6.6.1 Duct Insulation

In general interior ducts shall be exposed to the rooms and will not be insulated. The heat lost or gained from the un-insulated ducts shall be considered as part of the heating or cooling of the conditioned space..

6.6.2 Diffusers, registers and grilles shall be factory fabricated of steel or aluminum and distribute the specified air quantity evenly over the space intended. The devices shall be round, half round, square, rectangular, linear, or with perforated face as determined by the design. Units will be mounted in ceilings, high sidewalls, or directly to ductwork and shall be sized for the airflow to be delivered with a maximum NC rating of 35. Pressure loss through the diffuser shall be considered in sizing the duct system and the system static pressure calculations.

6.6.3 Branch Take-offs

Air extractors or 45° entry corners shall be provided at all branch duct take-offs. Manual volume

control dampers shall be included at the branch duct take-offs as shown and where required to facilitate air balancing.

6.6.4 Wall Penetrations

Building wall penetrations shall be carefully made so as not to deteriorate the structural integrity of the wall system. The Contractor shall consult with the building manufacturer, if possible, to determine the best way to penetrate the wall. If the building manufacturer is not available, a structural engineer shall be consulted. In either case, the recommendations of the engineer shall be strictly adhered to.

6.6.5 Control Wiring and Protection Devices

Control wiring and protection of the air conditioning units being offered must be the manufacturer's standard, pre-wired, installed in the unit at the factory or as recommended. Thermostats shall be located near the unit return. For units serving more than one area, the thermostat shall be located near the return of the space with the highest heat generation.

6.6.6 Thermostats

All thermostats shall be located near the return grills and mounted 1.5 meters above the floor and shall be easily accessible. In lieu of a thermostat, a temperature sensor may be located in the room and connected to the control thermostat near the unit. Thermostats located inside occupied areas shall be provided with lockable covers.

6.6.7 Electric Motors

All HVAC motors shall be Totally Enclosed Fan Cooled (TEFC) type and rated for minimum 40 C ambient.

6.6.8 Air Filtration

All supply air shall be filtered using manufacturer's standard washable filters mounted inside the unit. In addition, all outdoor air intakes where required shall be equipped with 50 mm (2 inch) thick washable filters.

6.6.9 Submittals

The Contractor shall submit the following for the equipment to be provided under this section of the specification: manufacturer's data including performance characteristics at design conditions, dimensions, performance data, electrical requirements, and compliance with standards as stated in paragraph CODES, STANDARDS AND REGULATIONS; drawings indicating location of each piece of equipment, routing and size of refrigerant piping.

6.6.10 VENTILATION AND EXHAUST SYSTEMS

All fans used for building ventilation and pressurization shall be with capacities specified and be selected for minimum noise level generated. Unit mounted fans either used for supply or exhaust shall be centrifugal forward curved, backward inclined, or airfoil fans with non-overloading characteristics of high efficiency and quiet running design. The fans shall be of the heavy-duty type with durable construction and proved performance in a desert environment. Each exhaust fan shall be provided with shut-off dampers which close automatically when the fan is not running. Also, each fan shall be complete with vibration isolator, external lubricators, and all accessories and sound attenuators as necessary.

6.6.11 NOT USED

6.6.12 Submittals

The Contractor shall submit the following for the equipment to be provided under this section of the specification: manufacturer's data including performance characteristics at design conditions; catalog cuts showing dimensions, performance data, electrical requirements, compliance with standards as stated in paragraph CODES, STANDARDS AND REGULATIONS; drawings indicating location and installation details.

6.7 ELECTRIC RESISTANCE HEATERS

6.7.1 Unit Heater. Provide a self-contained electric heating unit, suspended from ceiling or structure, with fan and heating elements. Provide control-circuit terminals and single source of power supply with disconnect. Heating wire element shall be nickel chromium. Include limit controls for overheat protection of heaters. Provide tamper resistant integral thermostat.

6.7.2 Cabinet Heater. Provide a self-contained electric heating unit, recessed mounted in wall or structure, with fan and heating elements. Provide control-circuit terminals and single source of power supply with disconnect. Heating wire element shall be nickel chromium. Include limit controls for overheat protection of heaters. Provide tamper resistant integral thermostat.

6.7.3 Submittals. The Contractor shall submit the following for the equipment to be provided under this section of the specification: manufacturer's data including performance characteristics at design conditions; catalog cuts showing dimensions, performance data, electrical requirements, compliance with standards as stated in paragraph CODES, STANDARDS AND REGULATIONS; drawings indicating location and installation details.

6.8 CEILING FANS

6.8.1 Ceiling Fan

Provide 1320mm blade ceiling fans at one per 40 square meters of floor space. Fans shall have reversible motors. Center or distribute evenly in room. Coordinate placement with the lighting plan to prevent conflict or casting shadows. Fan mount shall be flush, standard, or angle mount depending on ceiling height. Fan shall be mounted such that the fan blade is approximately 2.44 meters above the finished floor. The fan shall be provided with out light kit. The finish shall be factory painted white. The controls shall be from either a single pole switch or from two 3 way switches to provide on/off operation. The electrical supply shall be 230volts, single phase, and 50 hertz. Install per manufacturers' instructions.

6.8.2 Submittals.

The Contractor shall submit the following for the equipment to be provided under this section of the specification: manufacturer's data including performance characteristics at design conditions; catalog cuts showing dimensions, performance data, electrical requirements, compliance with standards as stated in paragraph CODES, STANDARDS AND REGULATIONS; drawings indicating location and installation details.

6.9 PROPANE COOKING STOVE

Cooking area shall be provided canopy type exhaust only kitchen hoods and associated exhaust fans. These exhaust hoods shall include baffle type aluminum filters to trap grease/oil. The exhaust fan sizing calculations should recognize the use of propane stoves in the kitchen. Sizing should accommodate all propane burning stoves running simultaneously. Additionally, the placement of the exhaust hood should allow enough clearance for an average sized male to stand on top of the stove platform unobstructed, for standing on the stove is common local cooking practice. The higher than average placement of the hood will require the extension of the

lip of the hood out further than normal, in order to catch the majority of the smoke and adequately vent the area. Propane tank shall be located out the DFAC covered in the fenced storage yard.

Make-up air for kitchen hood exhaust shall be pulled in from roof mounted louvered penthouse filter air intake and from adjoining Kitchen/Dining areas.

6.10 TEST ON COMPLETION

6.10.1 After completion of the work, the Contractor shall demonstrate to the Contracting Officer that the installation is adjusted and regulated correctly to fulfill the function for which it has been designed. The Contractor shall test, adjust, balance and regulate the section or sections of concern as necessary until the required conditions are obtained. Include tests for all interlocks, safety cutouts and other protective device to ensure correct functioning. All such tests shall be carried out and full records of the values obtained shall be prepared along with the final settings and submitted to the Contracting Officer in writing.

6.10.2 The following tests and readings shall be made by the Contractor in the presence of the Contracting Officer and all results shall be recorded and submitted in a tabulated form.

a. Room Inside Conditions:
1. Inside room DB & WB temperatures
2. Air flow supply, return and/or exhaust

b. Air Handling Equipment: Air quantities shall be obtained by anemometer readings and all necessary adjustments shall be made to obtain the specified quantities of air indicated at each inlet and outlet. Following readings shall be made:
1. Supply, return and outside air CMH (CFM) supplied by each air conditioning system.
2. Total CMH (CFM) exhausted by each exhaust fan
3. Motor speed, fan speed and input ampere reading for each fan
4. Supply, return and outside air temperature for each air-conditioning system.

c. Electric Motors:
For each motor: (1) Speed in RPM
(2) Amperes for each phase
(3) Power input in KW

6.11 ELECTRICAL REQUIREMENTS FOR HVAC EQUIPMENT

a. Note that electrical requirements for all HVAC systems shall be designed and installed to operate on the secondary power standard required herein.

b. All thermostats shall be wall mounted near the return grilles in the room with the highest heat load generation and mounted 1.5 meters (5 feet) above the floor. In lieu of a thermostat, a temperature sensor may be located in the same location and connected to a thermostat located near the unit return. Thermostat shall be mounted 1.5 meters (5 feet) above the finished floor and be easily accessible. Thermostats for the latrine facilities shall be located near the unit return and mounted 1.5 meters (5 feet) above the finished floor. Operation of the control system shall be at the manufacturer’s standard voltage for the unit.

c. The following are the minimum requirements for motors regarding enclosure, insulation and protection:

1. Compressor Hermetic: Provide inherent (internal) overload protection.
2. Condenser: Provide internal thermal overload protection.
3. Evaporator (Open Class "A") fan motor type provides internal thermal overload protection.

6.14 Outdoor Equipment

Screen walls or elevated platforms shall be provided for protection of outdoor HVAC equipment from wind-blown sand and debris.

6.15. HVAC SYSTEMS REQUIREMENTS

6.15.1 Power Plant, Wastewater Treatment Plant and Water Pump/Treatment Facility.

6.15.1.1 General

Air-conditioning HVAC shall be provided for personnel comfort where noted.

6.15.1.2 Engine Generator Room

Provide multiple air-handling units (AHU) to satisfy variable ventilation requirements for operation of multiple engine-generator sets in the Engine-Generator room. Each AHU shall be configured to provide filtered ventilation and heated air as required and recommended by the engine generator supplier for safe and full performance of equipment. HVAC equipment shall be located indoor wherever possible with access and adequate clearance for maintenance and installed at minimum 100mm high steel-skid or concrete pad for housekeeping. For administrative, storage, control rooms and other occupied areas, a typical air-handling system shall comprise of 30 percent efficiency pleated filters, dampers and controls and shall have provision for fresh air intake. Outside air shall be ducted in from a weatherproof sidewall louver equipped with insect screen and washable filters. Air-conditioning shall be provided in Control Rooms if so required to maintain summer temperature for switchgear performance. The air shall be distributed using metal ducts and registers. Balancing dampers shall be provided for airflow balance. AHU shall be controlled manually and shall be configured for Off/Summer/Winter modes of operation. Winter operation is by a diesel-burning heater; and summer operation is by an evaporative-cooler (swamp-cooler), using Heat-Cool Unit, see Dwg. “ANA HEAT-COOL DESIGN-02”.

6.15.1.3 Exhaust Systems

Exhaust systems shall be provided to remove excess heat and noxious fumes and to maintain indoor temperature within equipment operational parameters. All toilet, battery storage and charging, maintenance rooms shall be provided exhaust ventilation using wall or roof-mounted centrifugal fans and ductwork. Make-up air for small exhaust shall be pulled in from adjacent rooms through door grills or undercuts.

Toilet and Wash Areas: Exhaust ventilation at 5 CMH/m2 of floor area or 15 CMH/WC, whichever is greater..

6.15.1.4 Special Mechanical Systems

6.15.1.4.1 Water Pump/Treatment Plant. Refer to Civil section for requirements and provide heating, cooling and ventilation as required for process control, safety and personnel comfort.

6.15.1.4.2 Wastewater Treatment Plant. Refer to Civil section for requirements and provide heating, cooling and ventilation as required for process control, safety and personnel comfort.

6.15.1.4.3 Power Plant. Contractor shall design and construct diesel-engine exhaust system, engine cooling water system, and other HVAC and special systems required for full performance of equipment and operations in the Generator Plant. These systems shall be designed and built in accordance with codes and publications referenced hereinbefore and in compliance with equipment manufacturer recommendations.

Exhaust Ventilation. Provide wall or roof mounted centrifugal exhaust fan(s) with explosion-proof construction with coated-metal ductwork suitable for corrosive fumes. Provide air intakes with washable louvers. Provide exhaust fans on the wall or roof and intake registers within 150mm of the floor elevation.

6.15.1.4.4 Arms Storage Buildings

The Contractor shall design the electrical load and provide for electrical split-Pack heat pump units for the office(s).. No heating for storage areas. Provide operable ridge ventilation and wall intake louvers with washable filters and operable dampers in the storage area.

6.15.1.4.5 Maintenance Facility

Central Maintenance. Heating & cooling shall be by the Heat-Cool Units (diesel-heater & evaporative-cooler). Provide ceiling fans in offices. Provide exhaust ventilation in the maintenance bays using roof mounted exhaust fans and intake wall louvers with washable filters and dampers. Provide overhead tailpipe exhaust system between the first two end bays. Provide Toilet room exhaust system, battery room exhaust systems and a welding exhaust hood on the outside wall. Provide cold water and shop compressed air drops with hose reels one each to service every four bays with additional air drops with filter/regulators and quick disconnect at each column along each side of the building. Provide a waste oil collection system for used engine-oil from the service pits with discharge to a buried double wall storage tank. Trench waste to be routed through an oil/water separator to a buried in a double wall storage tank.

Motor Pool Maintenance. Heating & cooling shall be by the Heat-Cool Units (diesel-heater & evaporative-cooler). Provide ceiling fans in offices. Provide shop compressed air drops with filter/regulators and quick disconnect to service maintenance bays. Provide a waste oil collection system for used engine oil from service pits with discharge to a buried double wall waste oil storage tank.

6.15.1.4.6 Fuel Point

Fuel Storage & Dispensing. Refer to plumbing section for fuel storage and dispensing requirements at various Fuel Points.

6.15.1.4.7 Storage Buildings

Contractor shall design the electrical load and provide electrical infrared heating units for the paint shop and bays. Provide split package heat pump unit in offices. Provide operable ridge-vent ventilation and wall intake louvers with washable filters and operable dampers in the storage areas.

6.15.1.4.8 Ammunition Supply Point

No mechanical ventilation. Provide relief vents near ceiling and secured intake louvers near floor for natural ventilation.

6.15.1.4.9 Central Receiving

Office/Admin Area. Contractor shall design the electrical load for lights and equipment. Provide air intake with washable filters and operable dampers for ventilation and exhaust make-up. Storage Area. Provide operable ridge ventilation and wall intake louvers with washable filters and operable dampers in the storage areas.

6.15.1.4.10 Training Building

Contractor shall design the electrical load for lighting, ceiling fans, and equipment. Heating & cooling shall be by the Heat-Cool Units (diesel-heater & evaporative-cooler).

6.15.1.4.11 Entry Control Point and Reception Center Guard Houses & Towers

Reception Center. shall be heated and cooled by split-pac heat-pumps, with electrical heaters for outside temperatures below -5 ‘C.

Guard Houses. shall be heated and cooled by split-pac heat-pumps, with electrical heaters for outside temperatures below -5 ‘C.

Guard Towers. shall be heated and cooled by split-pac heat-pumps, with electrical heaters for outside temperatures below -5 ‘C.

6.15.1.4.12 Communications Building

Provide HVAC in communications building. Provide split pac heat pump units in offices and conference room(s). Provide exhaust ventilation in Toilets and generator room. Provide air intakes with washable filters and operable dampers for ventilation and exhaust make-up.

6.15.1.4.13 Brigade and Battalion Headquarters

Provide Heat Cool Unit (diesel-heater & evaporative-cooler) in buildings. The Contractor shall design the electrical load and provide 52-inch ceiling fans for offices, conference rooms, toilet areas, outside of shower areas, and general administration areas. Provide exhaust systems in Toilet areas, Shower areas, and Conference Rooms.

6.15.1.4.15 Barracks, All Types

Provide Heat-Cool Unit (diesel-heater & evaporative-cooler) with interior air ducting to all rooms and open spaces. Install 52- inch ceiling fans for air circulation..

6.15.1.4.16 Dining Facilities

6.15.1.4.17.1 Dining Area

Provide Heat-Cool Unit (diesel-heater & evaporative-cooler) in the Dining area. Install through the wall exhaust fans and 52- inch ceiling fans Minimum sizing of Heat-Cool Unit is: for winter 0.20 tkW / m2 floor (heat) & outside ventilation air of 20 m3/h / person or 6.7 m3/h / m2 floor, which ever is greater: for summer, outside air is 25 m3/h / m2 floor of evaporative cooled air equal to 80 m3/h / person at 3 m2 / person.

6.15.1.4.17.2 Kitchen Area
Motorized dampers shall be provided to change outdoor/return air mix and to allow summer/winter operation. Exhaust ventilation in the Can Wash, Toilet Room, and Kitchen area shall be provided with roof or wall mounted centrifugal exhaust fans. Cooking area shall be provided canopy type exhaust-only kitchen hoods and associated exhaust fans. These exhaust hoods shall include baffle type aluminum filters to trap grease/oil. The exhaust fan sizing calculations should recognize the use of propane burning stoves in the kitchen, and that there will be excessive steam and moisture loading due to the use of large pots on this type of stove. Sizing should accommodate all propane stoves running simultaneously. Additionally, the placement of the exhaust hood should allow enough clearance for an average sized male to stand on top of the stove platform unobstructed, for standing on the stove is common local cooking practice. Provide Propane burners and Afghan type tea boilers. The higher than average placement of the hood will require the extension of the lip of the hood out further than normal, in order to catch the majority

of the moisture and adequately vent the area. Make-up air for kitchen hood exhaust shall be pulled in from roof mounted louvered penthouse filter air intake and from adjoining Kitchen/Dining areas. The makeup air supply registers shall be located as close to the exhaust intake to prevent cold drafts in the kitchen.

6.15.1.4.17.3 Controls
Dining Room Heat-Cool Unit shall provide in summer 100 percent outside filtered (evaporative cooled) air for ventilation. , During winter heating, provide a minimum of 20 m3/h / person of outside ventilation air.. Toilet exhaust fans and Dining exhaust fan(s) shall be provided with Hand-Off-Auto switch. In the Hand setting, these shall operate continuously and in the Auto setting, these shall be interlocked to the air handler unit for operation.

The kitchen Heat-Cool Unit shall provide 100 percent filtered outside air for ventilation in the “summer” and heating with minimum outside air in the “winter”. The Can Wash exhaust fan and Kitchen exhaust fan(s) shall be provided with Hand-Off-Auto switch. In the Hand setting, these shall operate continuously and in the Auto setting, these shall be interlocked to the air handler unit for operation. Provide each of the Kitchen Exhaust Hood exhaust fans with a wall mounted ON/OFF switch. In the On setting the fan shall operate continuously.

6.15.1.4.18 POL Storage

Provide exhaust fan(s) with explosion-proof construction and coated metal ductwork suitable for corrosive fumes. Provide air intakes with washable filters. Provide exhaust fans on the roof and the intake register within 150 mm of the floor.

6.16 TESTING AND COMMISSIONING

6.16.1 General

After completing the work, but prior to building acceptance, the Contractor shall demonstrate that the ventilation systems are adjusted and operate correctly to fully satisfy the function for which these systems have been designed. The Contractor shall test, adjust, balance and regulate the system and its controls as necessary until the required designed conditions are met. The Contractor shall include tests for interlocks, safety cut-outs and other protective devices to demonstrate safe operation. A description of all equipment or systems to be tested and balanced including the test procedures must be submitted prior to the scheduled testing that will be witnessed by the Government. All such tests shall be carried out in the presence of the Contracting Officer or representative and full written records of the test data and final settings shall be submitted to the Contracting Officer.

6.16.2 The following tests data shall be submitted in a tabulated form:

a. Date and time of the test.

b. Outdoor DB and WB temperature.

c. Indoor Room Conditions: DB and WB temperatures and supply return and exhaust airflow.

d. Air Handling Equipment: Air quantities shall be measured by anemometer.

6.16.3 Following readings shall be recorded:

a. Supply, return and outside air CMH (CFM) supplied by each air handling system.

b. Total CMH (CFM) exhausted by each fan.

c. Motor speed, fan speed.(4)Input amperes and power input (KW) for each fan.

7 PLUMBING

7.1 SYSTEM REQUIREMENTS

Domestic water and waste systems shall be provided to each area with fixtures requiring water and/or waste connections such as toilets, etc. The entire water system shall include cold water to each fixture as well as to a water heater. Hot water shall be distributed to all lavatories, sinks, showers, etc. normally requiring hot water. Design of the water distribution and waste systems shall be in complete accordance with the requirements of the International Plumbing Code (latest edition). Design and construct a sewage tank system that can be converted into a lift station in the future. The Contractor shall design, furnish, install and test a domestic water supply system for each showers/latrines module (three for male and one female) as indicated on the drawing. Each supply system shall comprise of a booster pump, booster tank and water heater. Mechanical equipment shall be housed inside an insulated enclosure designed for year around operation and suitably protected from weather elements. Contractor shall design and install a domestic water tank system that can be easily converted to a permanent system in the future.

7.2 PIPING MATERIALS

Domestic water shall be distributed by means of PVC (cold water only), CPVC (cold or hot water) or copper for the pressure to be utilized. PVC and CPVC shall not be used in areas where it will be exposed to outdoor sun.

7.3 FIXTURES

All plumbing fixtures shall be provided with p-traps and shall be vented to the roof per International Plumbing Code, latest edition. The following typical plumbing fixtures shall be provided:

a. Eastern Water Closet (P-1) with flush tank assembly. Enameled cast iron, recessed floor mounted. Provide a cold water spigot 300mm above finished floor on the right (from a perspective of standing inside of the cubicle and looking out) sidewall of the cubicle.

b. Western Water Closet (P-1A) with flush tank assembly as specified by the designer. Vitreous china floor mounted, elongated bowl type. Provide at least one (1) western type water closet in Dining Facility, Power Plant, Corps Brigade, and Garrison HQ Buildings.

c. Lavatories (P-3). Enameled cast iron, wall or counter mounted. Brass fittings provided for water supplies. To be used in American or Afghan/American mixed facilities only.

d. Janitor’s Sink (P-4). Floor mount janitor, enameled cast iron with copper alloy rim guard. Provide hot and cold water valves with manual mixing. Faucet handles shall be copper alloy.

e. Shower (P-5). Showerhead and faucet handles shall be copper alloy. Provide for manual mixing with hot and cold water valves. In addition to a shower head, provide each shower stall with a threaded faucet approximately 1.2 m AFF with hot and cold-water controls, mixing valve and a diverter type valve so water can be directed to either the shower or to the lower faucet. Shower shall be provided with low flow shower head. Shower head shall be wall mounted, with swivel head and commercial grade.

f. Emergency Shower and Eye Wash Assembly (P-7). Provide in Power Plant,

Battery Room and in other facilities where appropriate. Provide a floor drain in the area, if appropriate (where emergency water flowing on the floor may lead to additional safety or operational complications).

g. Service Sink (P-8). Standard trap type, enameled cast iron. Service sinks provided in maintenance areas shall be metallic, and in battery rooms acid resistant.

h. Kitchen Sink (P-9). Single Bowl corrosion resisting formed steel. Faucet bodies and spout shall be cast or wrought copper alloy. Handles, drain assembly, and stopper shall be corrosion resisting steel or copper alloy.

The adequacy of water supply piping design will be based on the following:
International Plumbing Code, 2003: Water Supply Fixture Units (wsfu)

Dwg. Sym.	Plumbing Fixture		Cold	Hot	Total
P-1	WC Eastern, Tank		5.0	-	5.0
P-1A	WC Western, Tank		5.0	-	5.0
P-3	Lavatory, Public	1.5	1.5	2.0	
P-4	Janitor's Sink		2.3	2.0	3.0
P-5	Shower, Public	3.0	3.0	4.0	
P-7	Shower, Emergency	1.0	1.0	1.4	
P-8	service Sink		2.3	2.2	3.0
P-9	Kitchen Sink		2.0	2.0	3.0

Water flow rates are calculated from curve-fitting formulas
If sfu > 2 < 250 then Q(m3/h) = (sfu)^0.56 * 0.76 + 0.5
If sfu >251 < 5000 then Q(m3/h) = (sfu)^0.61 * 0.8 - 6.4
If sfu > 5001 < 10,000 then Q(m3/h) = (sfu)^0.56

Water flow velocity range is 0.5 to 2.4 m/s

Pipe I.D. Diameter (mm) = (354 * Q(m3/h) / V(m/s))^0.5

i. Ablution Trench (P-10). See building floor plans for size and construction of trench and number of stations. Provide trench drain with brass grating and strainer. Provide each station with hot and cold water valves with manual mixing. Faucet handles shall be copper alloy.

j. Grease Interceptor (P-11). Steel construction, manual cleaning type with removable checker-plate cover, complete with flow control valve. Tested and rated in accordance with PDI G-101. Concrete shall have 21 MPa (3045 psi) minimum compressive strength in 28 days.

k. Floor Sink (P-13). Provide floor sink, circular or square, with 300mm overall width or diameter and 250 nominal overall depth. Acid resistant enamel interior with cast iron body, aluminum sediment bucket and perforated grate of cast iron. Outlet size as indicated on plans.

l. Floor or Shower Drain (FD-A). Cast iron construction with galvanized body, integral seepage pan, and adjustable perforated or slotted chromium plated bronze, nickel-bronze, or nickel brass strainer consisting of a grate and threaded collar. Toilet room floor drains are similar except are provided with built-in, solid, hinged grate.

m. Trench Drain (FD-B). Cast iron construction with galvanized body, integral seepage pan, and adjustable perforated or slotted chromium plated bronze, nickel-bronze, or nickel brass strainer consisting of a grate and threaded collar. This style of drain shall be

employed in the kitchen area of the DFACs in response to kitchen cleaning practices of the local national staff. Also, access needs to be provided to the solids collector for routine emptying.

n. Room hose bibs and floor drains shall be provided as required. Afghan dining facility kitchen area clean-up hose bib to be supplied with connecting hose on reel including approximately 12 meters of hose. Provide clean-up spray nozzle with hose assembly.

o. Drinking Water Fountain (P14): Non-refrigerated with enamel cast iron or corrosion resistant bowl with brass fittings and faucets.

p. Provide P-Traps per Section 10022.4 of the International Plumbing Code IPC.

7.4 Hot Water

Hot water shall be provided for the facility to supply 49°C (120°F) hot water to fixtures and outlets requiring hot water. Hot water of a higher temperature shall be provided only where required for special use or process. Hot water piping shall be routed parallel to the building lines and concealed within finished rooms. All hot water piping shall be insulated. A hot water re-circulating pump shall be provided if hot water piping run exceeds 30m.

7.5 Hot Water Heaters

The hot water shall be generated by electric water heaters. The unit shall be typically located inside a mechanical room, storage room, toilet/janitor room or similar type space. The unit shall be of the commercially available tank type having low or medium watt density electric heating elements. Gas (natural or liquid propane) powered hot water generators shall be provided to satisfy large hot water requirements when economically justifiable and practical. In cases where the pressure of the water coming into the tank will violate manufacturer recommendations, and pressure reducer shall be installed in the line before the water heater. Also, all water heaters shall be equipped with a blowoff valve that will empty into a nearby floor drain.

7.6 WASTE, DRAIN AND VENT SYSTEM

Floor drains shall be provided in each room that contains a water source. Floor drains shall be provided in the mechanical equipment and toilet rooms as required. Drains shall be located near urinals or toilet partitions in toilet rooms. In mechanical rooms, floor drains shall be provided to avoid running drain piping long distances above or over the floor. A trench drain shall be provided for the DFAC Kitchen. All waste and vent piping shall be provided in accordance with the latest edition of IPC. Drain outlet shall use p-trap system to trap sewer gases. P-trap drain per Section 10022.4 of the International Plumbing Code IPC.

7.7 SPECIAL PLUMBING SYSTEMS. Contractor shall design and construct compressor air storage and distribution, waste-oil collection and storage, fuel-oil storage and distribution other plumbing systems that are required for full performance of equipment and operations and for maintenance in the Power Plant and Vehicle Maintenance facilities. These systems shall be designed and built in accordance with codes and publications referenced herein before and in compliance with equipment manufacturer recommendations.

7.7.1 Compressed Air Systems. Compressed air shall be provided using a packaged air-cooled electric motor driven compressor and ASME rated receiver with air cooler and moisture separator to remove moisture and oil. Compressed air system shall be capable of operation up to 1.4 MPa (200 psig maximum) for 0.86 MPa (125 psig normal) units. High-pressure system 1.4 MPa (200 psig maximum) shall be provided to supply compressed air to equipment where required. Provide an engine driven air compressor where needed for operation during electrical power

outages. The air distribution system shall be provided with necessary regulator valves to maintain desired pressure. Where required, line filters, lubricators, and/or hose reels shall be provided. Compressed air piping shall be black steel pipe and painted to match wall color. Noise level of air compressor should not exceed acceptable db limits.

7.7.2 Waste or hazardous drainage from battery repair/charging areas shall be treated prior to entering the base general waste drainage system. Hazardous waste drainage piping shall be acid resistant. Smaller battery rooms shall have waste treatment available using an acid neutralizing tank. Waste oil storage tanks shall be provided for collection of waste oil in the power plant and vehicle maintenance facilities. Waste oil storage tank shall be underground double-wall fiberglass or double-wall steel. Provisions should be made in the design of the underground storage tank that enable manual detection of leaks, prevent overfilling, facilitate liquid level detection, and allow for vapor release.

7.7.3 Drainage from maintenance areas, fueling areas, POL areas, etc., shall be treated prior to entering the base general waste drainage system. Treatment shall consist of sand and oil separators as required by facility function. Buried oil storage tanks shall be provided where required.

7.7.4 Generator Fuel Storage/Distribution. Fuel Oil Storage and Distribution shall be provided to support operation of diesel engine generators at the Power Plants, emergency generators and other locations. The bulk storage of fuels shall consist of above-ground horizontal steel tanks sized to store a 30-day supply of fuel, with containment dikes. These tanks shall be complete with fill tube and cap, suction tube, tank gauge, vent, and other fittings and appurtenances required for full and safe operation. Tanks shall be provided with support saddles, platform/stair and concrete pad. Fuel shall be transferred from the bulk storage tanks by duplex transfer pumps into individual day tanks. Fuel piping shall be fiberglass for underground and steel for piping located above grade. Bulk storage capacity shall be based on minimum four-week full load operation of the plant. Metal fuel tank saddles should not be place directly on fuel containment area slabs. They should be elevated on piers to avoid moisture corrosion. Fuel containment area should have a sump or manually controlled water release valves for water removal.

Provide fuel filling system for unloading fuel from fuel tanker into individual bulk storage tanks comprising of truck pad(s), duplex fuel transfer pumps, piping manifold and valves. The system shall provide remote fuel level monitoring panels at the pad(s) and the Power Plant Control Room.

7.7.5 Motor Pool Fuel Point

Motor Pool Fuel Point (Storage/Dispensing). Fuel storage and distribution shall be provided to support the vehicles used at various locations on base. The fuels shall be stored in one or more above-ground horizontal steel tank as per capacity scheduled given below.

Brigade Motor Pool 38,000 liters of Diesel and 5,000 liters of MOGAS

These tanks shall be complete with fill tube and cap, suction tube, tank gauge, vent, and other fittings and appurtenances required for full and safe operation. Tanks shall be provided with support saddles, platform/stair, concrete pad and leak spillage containment provisions. Fuels shall be transferred from the storage tanks by transfer pumps located within the fuel dispensing units. Fuel piping shall be fiberglass for underground and steel for piping located above grade. Provide separate dispensing units for diesel and MOGAS. Each dispensing unit shall be equipped with dual nozzles and key control. Coordinate site design and route all contaminated drainage water from the fuel dispensing pad through an oil/water separator.

7.7.6 Kitchen Fuel Storage/Distribution. Propane Storage and Distribution shall be provided to support operation of the propane stoves for cooking and boiling tea. The bulk storage of fuels

shall consist of above-ground horizontal steel tanks sized to store a 28-day supply of fuel, with earth berms (earth beams shall be designed to prevent gas from accumulating at low points). Earth berms shall be sloped 1 to 1 and be 600 mm above high point of tanks. These tanks shall be complete with fill fittings, tank gauge, vent, and other fittings and appurtenances required for full and safe operation. Tanks shall be provided with support saddles, platform/stair and concrete pad.. Bulk storage capacity shall be based on minimum four-week full load operation of the kitchen. Metal fuel tank saddles should not be placed directly on fuel containment area slabs. They should be elevated on piers to avoid moisture corrosion. Provide chain link fence and gates around entire propane storage facility. Fence shall match perimeter Force protection fence with lockable gates, and concertina wire etc. Provide fuel filling system for unloading fuel from fuel tanker into individual bulk storage tanks comprising of truck pad(s), duplex fuel transfer pumps, piping manifold and valves as required for a complete system.

7.8 TESTING AND COMMISSIONING

The Contractor shall test all piping systems in accordance with IPC International Plumbing Code. The final test shall include a smoke test for drainage and vent system and pressure test for the domestic water piping. After completing the work, the Contractor shall demonstrate that all plumbing systems operate to fully satisfy the function for which these systems have been designed. The Contractor shall test, adjust, balance and regulate the system and its controls as necessary until the required designed conditions are met. The Contractor shall include tests for interlocks, safety cutouts and other protective devices to demonstrate safe operation. All such tests shall be carried out in the presence of the Contracting Officer and full written records of the test data and final settings shall be submitted to the Contracting Officer. After all tests are complete, the entire domestic hot and cold water distribution system shall be disinfected. The system shall not be accepted until satisfactory bacteriological results have been obtained.

8 FIRE PROTECTION

8.1 GENERAL

Facility construction and fire protection systems shall be installed in accordance with the publications listed herein and the publications referenced therein. Where a conflict occurs among various criteria, the more stringent requirement shall take precedence.

8.2 BUILDING CONSTRUCTION

Building construction shall conform to fire resistance requirements, allowable floor area, building height limitations and building separation distance requirements of the building codes listed.

8.3 LIFE SAFETY

Facilities features will be provided in accordance with NFPA 101 and the International Building Code, among other references, to assure protection of occupants from fire or similar emergencies.

8.4 FIRE PROTECTION EQUIPMENT

All fire protection equipment and all fire rated assemblies shall be listed by Underwriters' Laboratories (UL) or approved by Factory Mutual (FM) or equivalent as determined by the Contracting Officer and shall be listed in the current UL Fire Protection Equipment Directory or Factory Mutual Approval Guide or equivalent.

8.5 NOT USED

8.6 FIRE ALARM AND DETECTION

Smoke detection – see electrical section for more fire alarm and detection details. Smoke detectors are required per NFPA 101 and 72 for each building or as required by the applicable code. Smoke detectors shall have back up battery power and be installed according to all applicable fire protection codes. Alarm activation shall be connected to a zoned fire alarm control panel for each facility as required by the applicable codes. Alarm redundancy is not required. Fire alarm evacuation systems shall be provided as required by NFPA 101 and UFC 3-600-01 and listed herein.

8.7 WATER SUPPLY FOR FIRE PROTECTION

A dedicated fire protection water supply is unavailable. Sprinkler systems are not required.

8.8 PORTABLE FIRE EXTINGUISHERS

Portable fire extinguishers shall be provided inside all facilities and at exterior locations as required in accordance with NFPA 10. Generally, extinguishers will be of the multi-purpose dry chemical type except for occupancies requiring a special type extinguisher (e.g., carbon dioxide portable fire extinguishers for electrical rooms). Special care is required for high hazard and multi-usage extinguishers required for areas such as the DFAC kitchen.

9. ELECTRICAL

9.1 GENERAL

SCOPE OF WORK

9.1.1 General. Contractor shall design and construct: (a) On-site Prime Power Generating Plant (b) Exterior Overhead Primary Power Distribution System,
(c) Interior Secondary Distribution System (d) Lighting and power branch circuitry, (e) Premise telephone and network/data wiring and (f) Interior Fire Detection and Alarm System. All of the systems shall be designed for the ultimate demand loads plus 25% spare capacity.

9.1.2 Temporary Electrical Service (Not Used)

9.1.3 All equipment shall be tested, commissioned, and operational at time of turn-over to the government. Contractor shall provide all necessary operating instructions, commissioning reports, spare parts, and related items at time of turn-over.

9.2 Design Criteria

9.2.1 Applicable Standards

a. Design shall be in the required units as stipulated herein.
b. Conflicts between criteria shall be brought to the attention of the Contracting Officer for resolution. In such instances, all available information shall be furnished to the Contracting Officer for approval.
c. All electrical systems and equipment shall be installed in accordance with NFPA code requirements.
d. Acceptance Testing: Contractor shall develop and submit for approval complete acceptance test procedures on all systems provided. As a minimum the testing procedures shall comply with the requirements of NFPA 70 (NEC) and International Electrical Testing Association Inc. (NETA).

e. Any other applicable references listed herein, including the following:

ANSI/IEEE Std 81-1983
ANSI/NETA ETT-2000
ANSI/NETA MTS 7.2.2-2001
ANSI/TIA/EIA-568 Commercial Building Telecommunications Cabling Standard
ANSI/TIA/EIA-569 Commercial Building Standard for Telecommunication Pathways and Spaces
EIA ANSI/TIA/EIA-607: (1994) Commercial Building Grounding/Bonding Requirement Standard.
ETL 1110-3-412 Transformer Application Guide
ETL 1110-3-502, Telephone and Network Distribution System Design and Implementation Guide.
Factory Mutual (FM) Approval Guide-Fire Protection (2002).
IBC - International Building Code
IMC – International Mechanical Code
IPC – International Plumbing Code
IEEE C2 National Electrical Safety Code (NESC)
IEEE 48 IEEE Standard Test Procedures and Requirements for Alternating- Current Cable Terminations 2.5 kV Through 765 Kv
IEEE Std 62™-1995 (R2005)
IEEE Std 81.2-1991
IEEE 100
IEEE 241 - 1990
IEEE 242 - 2001
IEEE standard 400-1991
IEEE standard 519-1992
IEEE C57.12.22
IEEE C57.12.34
IEEE C57.12.28
IEEE C57.12.80
IESNA Lighting Handbook
International Electrical Testing Association Inc. (NETA) Acceptance Testing Specifications for Electrical Power Distribution Equipment and Systems
NFPA 10, Portable Fire Extinguishers
NFPA 70, National Electrical Code
NFPA 72, National Fire Alarm Code, 2002 edition
NFPA 90A, Air Conditioning and Ventilating Systems, 2002 edition
NFPA 101, Life Safety Code, 2003 edition
NFPA 780, Lightning Protection
TM 5-811-1 Design: Electrical Power Supply and Distribution
TM 5-811-3 Electrical Design: Lightning and Static Electricity Protection
UFC 3 410-01FA Heating, Ventilating and Air Conditioning
UFC 3 410-02A Heating, Ventilation and Air Conditioning (HVAC) Control Systems
UFC 3-520-01 Interior Electrical Systems, 10 June 2002
UFC 3-530-01AN Design: Interior and Exterior Lighting and Controls 19 Aug 2005
UFC 3-550-03FA Electrical Power Supply and Distribution
UFC 3-600-01 Fire Protection Engineering for Facilities
UFC 3-540-04 Diesel Electric Generating Plant
Underwriters' Laboratories (UL) Fire Protection Equipment Directory (2002).

9.3 Material:

9.3.1 General:

Unless noted otherwise, all material used shall be in compliance with the requirements of UL standards. In the event that UL compliant materials are not available, Contractor may then select applicable British Standards (BS), IEC, CE, CSA, GS, DIN listed material (or equivalent), but the contractor must prove equivalence and must provide the government with a full copy of the

relevant specification(s)/standard(s). Material and equipment installed under this contract shall be for the appropriate application and installed in accordance with manufacturers recommendations.

Equipment enclosure types shall be in compliance with the National Electrical Manufacturer's Association (NEMA) or the International Electro-Technical Committee (IEC) standards.

Material and equipment installed under this contract shall be for the appropriate application. Materials and equipment shall be installed in accordance with recommendations of the manufacturer. Major components of equipment shall have the manufacturer's name, address, type or style, voltage and current rating, and catalog number on a non-corrosive and non-heat sensitive plate, securely attached to the equipment. All equipment delivered and placed in storage, prior to installation, shall be protected from the weather, humidity and temperature variation, dirt and dust, and any other contaminants. All equipment shall be in new condition, undamaged and unused.

9.3.2 Standard Product:

All material and equipment shall be a standard product of a manufacturer regularly engaged in the manufacture of the product and shall essentially duplicate items that have been in satisfactory use for at least two (2) years prior to bid opening.

9.3.3 Design Conditions: All equipment shall be rated and designed for 49 degrees Celsius (120 degrees Fahrenheit) and minimum elevation of 2000 meters above sea level.

9.3.4 Restrictions: Aluminum conductors shall not be specified or used. Aluminum windings shall not be used in transformers. Any references to 120/208/220/277/480 volt, 60Hz systems in any code or standard shall be interpreted as 220/380 volt, 50Hz systems, unless otherwise modified or directed in this RFP. References in the National Electrical Code to 120 or 125 volt receptacles shall be taken to mean 220v receptacles.

9.4 Design Requirements

9.4.1 Electrical Distribution System

Contractor shall perform a load calculation to determine the number of required transformers to feed all facilities in this project. In the event the existing transformer(s), if present, cannot support the load of the entire facilities package, the contractor shall notify the Contracting Officer. In such instances the contractor shall provide all the information regarding the required number of the new transformers to the Contracting Officer. Design and installation of any additional feeders required from any new ATS(s) will be the responsibility of the contractor. Contractor shall coordinate power needs with the Contracting Officer relative to needs met by each transformer, and to limit power interruption to other services already connected.

DESIGN REQUIREMENTS

Power Plants

On-site Prime Power Generating Plant shall be housed in a power plant building consisting of, as a minimum, a separate generator area, high voltage switchgear room, an office area (+/- 4M x 5M) and a storage room (+/- 4M x 5M). Two empty generator bays, provided with necessary conduit stub-up etc. for future equipment, room for switchgear expansion, and room for two future step-up transformers shall be provided within the building. Sufficient aisle space shall be provided around the generators for a forklift/A-Frame crane for transporting/handling heavy equipment. Building shall be sized for power plant equipment necessary to meet immediate demand load

requirements (4 MW minimum) for all of the Base, as explained in the paragraph for generators. Electrical equipment shall include, but not be limited to, diesel engine generators, high-voltage switchgear, step-up transformers, compressors, pneumatic tanks, black start generator, day tanks, relaying equipment and all other auxiliary equipment that is necessary for operating a prime power plant. All equipment items should have brief instructions posted on them in English and Afghan languages. Final generating capacity of the power plant design only shall be for the ultimate site demand load based on the master (site) plan, plus 25% spare capacity for any future load growth. The construction shall meet a minimum of 4 MW (4000 KW) capacity, but shall be designed to meet the total site demand load, plus 25% spare capacity. HID Metal Halide light fixtures may be provided in the generator/high bay area(s). Fluorescent light fixtures shall be provided in the remaining areas. Emergency lighting, emergency egress 'exit' lights and exterior building lighting shall be provided as necessary. Secondary wiring within the building shall be per paragraph 'Secondary Power Distribution System' below. Initial capacity of the Power Plant equipment shall be to meet initial electrical demand loads. Power Plant Building shall be designed and built for the total number of generators/equipment required to service the Base. All cabling within the Power Plant associated with Power Generation (Generator to Transformer to Switchgear) shall be installed underground.

9.4.1.1 Generators

Generators shall be skid mounted standard industry size, 1,500 RPM, diesel-engine Prime Power rated units. Number of units shall be based on the N+2 principle. Where 'N' would represent number of units required to meet the Base demand load plus 25% spare capacity and '+2' would represent a spare generator available at all times. Contractor shall consider building sq footage, of existing and any known future buildings planned for the Base, for the purpose of calculating ultimate electrical demand loads for the Base in sizing of the Power Plant/generators. Generating voltage shall be 3 phase, 380 volts, and 50 hertz, stepped up to 15kV, via transformers, for base wide Primary Power Distribution through the generator switchgear described below. Generator starting may be either pneumatic or electric, at the Contractor's option. Each generator shall be provided with a day tank with a minimum fuel capacity of 8 hours operating at 100% generated rated (kW) load. Maximum generator size shall not exceed 1000kW (1250 kVA). Contractor, at his option, may select generators with 15kv generating voltage in lieu of 380v and stepping-up to 15kv via transformers for distribution. The Contractor shall schedule transformer and other long lead-time power submittals in time for approvals, procurement, delivery and installation to establish permanent power as soon as possible.

9.4.1.2 Black Start Generator

Power plant shall be provided with a 'black-start' generating unit. Generator shall be appropriately sized (kW rating) to meet all of the power requirements for the initial start-up of the power plant. Unit shall be skid mounted and rated at 380/220 volt, 3 phase, 4 wire and 50 hertz. Upon bringing the prime power generator on line, initial start-up power plant load shall be automatically transferred from the black-start generator to the plant power, via an Automatic Transfer Switch (ATS). Cabling within power plant will be underground.

9.4.1.3 High Voltage (15 kV) Switchgear

Dead-front type (i.e. no live parts shall be exposed) switchgear shall consist of a Generator Bus and a Distribution Bus. Both buses shall be connected via a bus-tie circuit breaker. Distribution Bus shall be provided with a minimum of three (3) 15 kV feeder circuit breakers and one (1) spare 15 kV circuit breaker for future connection to commercial power. Minimum two (2) high voltage feeders, with load transfer capability, shall service initial Base loads. Three (3) high voltage feeders shall service ultimate Base loads. Circuit breakers shall be vacuum or SF-6 gas filled type. Each feeder breaker shall be furnished with, but not be limited to, necessary relays, ammeter, voltmeter, current and potential transformers etc. for recording current and voltage readings. Concrete encased high voltage feeder cable get-a-ways (duct-bank) shall be provided

from each breaker cubicles to outside manhole(s). Spare conduit shall be provided in each get-a way (duct-bank). Conduits shall be PVC, minimum 100 mm (4 inch) in diameter.

9.4.1.4 Generator Synchronizing Equipment

Generator synchronizing/paralleling equipment shall be provided, in order for the generator(s) to synchronize with an operating generator, prior to coming on-line. Minimum of one (1) prime power generator shall be on line at all times. With an increase in the demand load, all stand-by generator(s) shall start and the generator that synchronizes first with the operating generator shall come on-line and share load equally. The other generator(s) shall run through a complete cool-down cycle and then stop. Similarly, with the decrees in the demand load, the generator(s) shall drop-off line, one at a time, keeping a minimum of one generator operating on-line. All generator(s) shall go through a cool down cycle prior to coming to stop. All relaying shall be automatically reset for automatic restart and stopping of generators as the load demands increases or decreases. Load sharing by the stand-by generator(s) shall be adjustable between 50% to 85% load on the operating generator(s). Synchronizing/ paralleling of generators shall be automatic and manual.

9.4.1.5 Load Bank

Contractor shall provide a factory manufactured, industry standard permanent load bank connected to the high voltage (15 kV) bus via a transformer to supplement for low demand load on the operating generator(s). Load bank shall be rated at 1000 kW, with 50 kW load steps. Unit shall be provided with a control panel and necessary circuit protection.

9.4.1.6 Fuel Storage / Distribution System: Refer to mechanical section for generator fuel storage/distribution system requirements.

9.4.1.7 Miscellaneous

Contractor shall be responsible for providing all relaying, metering and power plant grounding equipment necessary for safe and efficient operation of the power plant. Relaying shall include, but not be limited to, differential, locking-out, over current, directional, reverse power, and related items.

9.4.1.8 Operating Instructions

Contractor shall provide, mounted in a frame, a complete electrical one-line diagram of the power plant with detail operating instruction. Instruction shall be mounted on a wall inside the switchgear room. Similarly, complete fuel and cooling system schematic diagrams shall also be provided in the switchgear room. Brief operating instructions shall be posted on major components in the power plant. These instructions shall be written in English and Afghanistan languages.

9.4.2 Site Primary & Secondary Power Distribution System

Primary (15kV ‘Delta’) and secondary power distribution shall be underground. Design and installation of primary and secondary power distribution systems shall be complete and in compliance with the requirements of the National Electrical Safety Code (ANSI/IEEE C2), UFC 3-550-03FA (also called Army TM 5-811-1), National Electrical Code (NFPA 70), and other electrical references listed in this RFP. Site-wide primary power distribution system shall be designed (laid-out) to be serviced by a minimum of three (3) high voltage feeders. All feeders shall be provided with feeder-to-feeder tie capabilities to transfer loads between feeders. Feeder tie points shall be located in the field and away from the Power Plant. Primary power distribution shall be complete, to include but not be limited to, fused cut-outs, arresters, terminals, cable guards, circuit breakers, transformers, and related items. All primary feeder taps shall be protected with fused cutouts. Long feeder runs shall be provided with sectionalizing devices, such

as, in-line fuses, sectionalize or reclouser, as necessary. Minimum of 3 fuses, with appropriate rating, shall be provided as spares at each fused cut-out location.

Primary Distribution shall be installed in accordance with the NESC, UFC 3-550-03FA, and other applicable standards listed in this RFP.

9.4.2.1 Raceways

Exterior raceways (conduits) shall be installed at a slope towards a manhole or hand-hole to avoid collection of water in the raceway. Conduit shall be PVC, thin-wall for concrete encasement and hard-wall (Schedule 40) for direct burial. Direct buried conduit shall only be installed for street lighting circuits. Direct buried conduits shall be encased in concrete, when under paved areas or under road crossings. High voltage cables shall be installed in conduit no less than 100mm (4 inch) in diameter. Secondary cable shall be installed in conduit no less than 100mm (4 inch). Direct buried conduit shall be installed 800mm (32 inch) below grade.

All underground conduits shall use long-sweeping elbows. All communications conduits shall use long-sweeping elbows.

9.4.2.2 Existing Services / Building Loads

Contractor shall connect all existing active electric services to facilities in the Base, to the new power distribution system provided under this contract. Connection of existing services to the new system shall be via appropriately sized pad-mount transformer(s) and coordinated with the Contracting Officer.

9.4.3 Provide telephone lines to the Corps, Brigade, and Battalion Headquarters Buildings.

9.4.4 Transformer Stations: Transformer stations shall be strategically located close to the loads. Dedicated transformer stations shall be provided for large loads. Transformers shall be Primary ‘Delta’ and Secondary ‘WYE’ connected. Primary side load-break disconnecting means shall be provided with all transformers. All transformers shall be sizes for known projected demand loads, plus (+) 25% spare capacity for future growth. On ground transformers shall be dead-front, loop-feed, pad-mounted, compartmental, self-cooled type. Transformers shall come complete from manufacturer; use of third-party transformer housings or add-on transformer housings shall not be permitted. Transformers shall have no exposed live components.

Transformer selection, design, and installation shall be governed by NEC, NESC, ETL 1110-3-412, TM 5-684, UFC 4-510-01, UFC 3-550-03FA, UFC 3-550-03N, IEEE C57.12.28, ANSI/IEEE C57.12.22, IEEE C57.12.34, and C57.12.80.

Medical Clinic: Electrical system shall be designed as a double-ended substation, fed from two different feeder circuits, to two different transformers. Installation shall be per UFC 4-510-01 paragraphs 10.2.3 and 10.3 (including 10.3.1 thru 10.3.5) and figure 10-1. Power system for medical clinic shall be a “type 1 EES” as defined in NFPA 99. Size of transformers, generators, and power feeds shall be governed by UFC 4-510-01, NFPA 99, and the NEC. In case of conflict between transformer design criteria between the above named standards, UFC 4-510-01 shall govern; in cases where UFC 4-510-01 can not resolve the conflict, it shall be brought to the attention of the Contracting Officer for resolution.

9.4.5 Underground Conductors: All underground conductors shall meet the requirements of the codes and standards listed in this RFP, including but not limited to: NESC, NEC, UFC 3-550-03FA, and related.

9.4.6 Secondary Power Distribution System

Secondary Power shall be 380/220 volts, 3 phase, 4 wire, 50 Hz. Building secondary power distribution system shall include main distribution, lighting and power panels as required. All panel boards shall be circuit breaker ‘bolt-on’ type panels. In large buildings separate lighting and power panels shall be provided. It is recommended that minimum size circuit breaker be rated at 20 amperes. Circuit breakers shall be connected to bus bar(s) within the panel boards. Daisy chain (breaker-to-breaker) connection(s) shall not be acceptable. Indoor distribution panels and load centers shall be flush mounted in finished areas. All circuit breakers shall be labeled with an identification number corresponding to the panel schedule. A 3-pole circuit breaker shall be a single unit and not made up of 3 single pole circuit breakers connected with a wire or bridged to make a 3-pole breaker. All wiring shall be copper, minimum # 12 AWG (4mm sq), recessed in finished areas and surface mounted in metal conduits in unfinished areas. All panels shall be provide with a minimum of 25% spare capacity for future load growth. Power receptacles (outlets) shall be duplex, 240 volts, 50 HZ, German (DIN) Standard. All splicing and terminations of wires shall be performed in a junction or device boxes. Proper wire nuts/connectors shall be used for splicing wire. No twist-wire connections with electrical tape wrapped around it shall be acceptable. All electrical installation shall be in accordance with the requirements of NFPA 70 (National Electric Code). Main Distribution Panel shall be provided with an ammeter, voltmeter and kilowatt-hour meter. Selector switch shall be provided for reading all 3 phases. All service entrance cables and equipment, such as main distribution panels etc., to the facilities shall be sized for the ultimate facility loads, to include any heating loads (infrared heating), initial and future provided by others.

9.4.6.1 Receptacles

General purpose receptacles shall be duplex, grounding (earthed) type, "flush" or "semi-flush" wall mounted type, color ivory and installed 500 mm above finished floor (AFF). In office or similar areas receptacles shall be provided at every 1.8 M intervals. In maintenance buildings 3-duplex receptacles shall be provided at each vehicle maintenance bay. In storage buildings, receptacles shall be provided in 5 m intervals. In communications rooms, receptacles shall be provided at 1 m intervals or closer. CEE Type receptacles with plugs 2P+E (240v) or 3P+E (380v) and with appropriate rating, shall be provided for, but not be limited to, washers, dryers, kitchen equipment and any other type of large plug-able equipment. Receptacle shall be complete to include box, cover plate and necessary screws/connectors and of the type most commonly used in Afghanistan.

Medical Clinic: Provide receptacles at patient beds per NEC 517.18 and 517.19. Provide and install electrical receptacles no more than three (3) meters apart on all other interior walls. All receptacles shall be Hospital Grade, per NEC requirements. Receptacles shall be complete to include box, cover plate and necessary screws/connectors and shall be type CEE 7/7. Provide no less than two separate 20A circuits per room, unless more are required per NEC, NFPA 99, and UFC 4-510-01.

Fuel storage capacity shall be base on usage at total electrical load for a minimum of 30 days at full load for the entire duration. Fuel storage shall either be in aboveground single wall steel tank(s) with containment pit or underground double wall with leak detection. The contractor shall provide and install properly sized service entrance feeder from the generator system to the service entrance equipment located inside of each facility. Service entrance equipment shall include a distribution panel board properly sized to feed each facility.

Contractor shall provide (design and install) circuits for all mechanical equipment and any other equipment that requires power and make the final connections.

All loads shall be coordinated to provide balanced loading. Phase imbalance at each panel shall not exceed 5%.

Voltage Drop for branch circuits shall be limited to no more than 3%; voltage drop for branch and

feeder circuits combined shall be limited to no more than 5%.

All circuit breakers shall use down-stream coordination to ensure the breaker nearest a fault or overload is the first to trip.

9.4.2 Lighting

Design levels shall be per IES standards as a minimum. For convenience, the following lighting level table is listed. Note: all spaces listed below may not be within the work required within this contract.

General Office Space / Computer Rooms	50 FC (504 Lux)
Conference Rooms	30 FC (320 Lux)
Dinning Rooms	70 FC (700 Lux)
Laundry Rooms	30 FC (320 Lux)
Bed Rooms	30 FC (320 Lux)
Kitchen	70 FC (750 Lux)
Lobbies	15 FC (160 Lux)
Lounges	15 FC (160 Lux)
Mechanical & Electrical Equipment Rooms	15 FC (160 Lux)
Stairways	20 FC (215 Lux)
Toilets	20 FC (215 Lux)

Medical Clinic Lighting: Lighting in the Medical Clinic shall be per UFC 4-510-01 Appendix A. High frequency electronic ballasts shall NOT be used in the Medical Clinic.

FC = footcandle
H = horizontal component
V = vertical component

Indoor lighting for all areas shall consist of fluorescent surface mounted light fixtures. Exterior lighting will be installed as referenced. Moisture resistant/waterproof fluorescent light fixtures shall be provided in high humidity and wet areas such as latrines and showers. Battery powered ‘emergency’ and ‘exit’ lights shall be provided within each building, as applicable, for safe egress during a power outage. All light fixtures shall be factory finished, complete and operational, to include but not be limited to, lens, globe, lamp, ballast etc. Industrial type fluorescent light fixtures shall not be used. Every room shall be provided with a minimum of one light switch. Light fixtures shall be mounted approximately 2.5-meters (8 feet) above finished floor (AFF), minimum. Fixtures may be pendant or ceiling mounted, depending on the ceiling type and height. High Ceilings-Contractor may provide high bay High Pressure Sodium (HPS) vapor light fixtures in facilities with high ceilings, provided that the replacement lamps for the fixtures are available locally.

9.4.3 Light Fixtures

Lighting fixtures shall be a standard manufacturer’s product. Fluorescent surface mounted light fixtures shall be power factor corrected and equipped with standard electronic ballast(s) except medical clinic with magnetic ballasts. All light fixtures shall properly operate using standard lamps available locally. Fixtures shall be fully factory wired and designed for appropriate application i.e. appropriate for that location where installed.

9.4.4 Emergency “EXIT” Light Fixtures

Emergency “EXIT” light fixture shall be provided in accordance with NFPA requirements. Fixtures shall be single side and for wall/ceiling mounting. Unit shall illuminate continuously and be provided with self-contained nickel cadmium battery pack, to operate on floated-battery or trickle

charge circuit. Fixture shall operate satisfactorily for 90 minutes during a power outage. Unit shall have test/re-set and lamp failure indication buttons. Primary operating voltage shall be 220 volts. Exit signs shall be the international standard for signs using diagrammatic image to convey message. Illuminations shall be with LEDs.

9.4.5 Above Mirror Lights

Above mirror lights shall be provided in toilet rooms.

9.4.6 Emergency Lighting

Battery powered emergency lights shall be provided within each building per NFPA for safe egress during power outage. Fixtures shall be provided with self-contained nickel cadmium battery pack to operate on stand-by circuit for 90-minute minimum. Unit shall have test/re-set and lamp failure indication buttons. Primary operating voltage shall be 220 volts.

9.4.7 Light Switches

Light switch shall be single pole. Minimum of one light switch shall be provided in every room. Lighting in large rooms/areas may be controlled from multiple switches. Three-way or Four-way lighting shall be provided in all rooms / areas with multiple entrances.

9.4.8 Receptacles

General-purpose receptacles shall be as required herein. All receptacles shall be duplex, unless otherwise specified in this section, section 01010, the NEC, or other referenced standard.

Receptacles shall be placed at 3-meter (10 feet) intervals (maximum) in general. Areas with computer work-stations or similar equipment will have additional receptacles. Sinks will have a receptacle above, with one dual receptacle serving two sinks that are side-by-side. Receptacles in wet/damp areas or within 1 meter (~3 feet) of sinks, lavatories, or wash-down areas shall be ground fault circuit interrupter (GFCI) type or Residual Current Disconnect (RCD) type, with the trip setting of 10 milliamperes or less. Total number of duplex receptacles shall be limited to six (6) per 20-ampere circuit breaker.

9.4.9 Conductors

All cable and wire conductors shall be copper. Conductor jacket or insulation shall be color coded to satisfy NEC requirements. The use of 75 or 90 degree C (minimum) terminals and insulated conductors is required. Use of 75 degree C conductors on circuits with protective device terminals rated for 60 degree C is inappropriate.

9.4.10 Grounding and Bonding

Grounding and bonding shall comply with the requirements of NFPA 70. Underground connections shall be exothermal welded. All exposed non-current carrying metallic parts of electrical equipment in the electrical system shall be grounded. Insulated grounding conductor (separate from the electrical system neutral conductor) shall be installed in all feeder and branch circuit raceways. Grounding conductor shall be green-colored, unless the local authority requires a different color-coded conductor. Ground rods shall be copper-clad steel. Final measurement of the ground resistance shall be in compliance with the requirements of the local authority but shall not exceed 25 ohms when measured less than 48 hours after rainfall.

Communications Building: Grounding and Bonding shall meet the requirements of ANSI/TIA/EIA-942, IEEE 81.2 and IEEE 1100, as well as the NEC. Ground resistance shall not exceed 5 ohms

when measured more than 48 hours after rainfall using the fall of potential method outlined in IEEE 81. A ground ring shall be installed around the communications building.

Medical Clinic: Grounding and Bonding shall meet the requirements of ANSI/TIA/EIA-942, IEEE 81.2, IEEE 1100, NFPA 99, and UFC 4-510-01, as well as the NEC. Ground resistance shall not exceed 5 ohms when measured more than 48 hours after rainfall using the fall of potential method outlined in IEEE 81.

Power plant: Grounding and Bonding shall meet the requirements of ANSI/TIA/EIA-942, IEEE 81.2 and IEEE 1100, as well as the NEC. Ground resistance shall not exceed 5 ohms when measured more than 48 hours after rainfall using the fall of potential method outlined in IEEE 81. A ground ring shall be installed around the Power Plant.

9.4.11 Lightning Protection

Communications Building, Medical Clinic, Ammo Supply Point, Propane Tanks, Fuel Point and Power Plant including Fuel storage tanks shall have a lightning protection system installed per the NEC and NFPA 780, as well as other applicable standards listed in this document. Medical clinic lightning protection requirements shall also meet the requirements in UFC 4-510-01.

Ammo Supply Point and all fueling areas shall also implement static electricity controls in accordance with standards listed in this document.

9.4.12 Enclosures

Enclosures for exterior applications shall be NEMA Type 4X (IEC Classification IP56) or better and for dry interior locations NEMA Type 1 (IEC Classification IP10) or better. For wet indoor locations, NEMA type 3R (IEC Classification IP54) or better shall be used.

9.4.13 Fire Detection & Alarm System

In barracks Fire Detection and Alarm System shall consist of hard-wired, multi-station smoke detectors, with building wide annunciation. In the Headquarters Building complete Fire Detection and Alarm System shall be provided, to include, fire alarm control panel, pull (or push button) stations, horns, strobe lights, smoke and/or heat detectors, as required. No Fire Alarm System shall be provided in the Dining/MWR Facility. Fire alarm cable shall be installed in recessed hard wall RSC conduit and plastered over it. In addition to building wide fire alarm annunciation, the system shall also be capable of automatically transmitting the alarm signal via telephone lines to the local Base Fire Department / Fire Station. System design shall be in accordance with the requirements of NFPA 72. Fire alarm system shall be complete and a standard product of one manufacturer. Contractor shall provide hard-wired carbon monoxide (CO_2) detectors, with local in-room annunciation, in all rooms where wood burning or oil-fired heaters will be provided.

9.5 TELEPHONE/COMPUTER NETWORK SYSTEM

Each Corps, Brigade, and Battalion HQ building office, room shall have telephone and computer data outlets. Telephone/data System shall include 110 punch down blocks, cross-connect boxes, cross connect patch panels, duplex RJ-45 telephone outlets with a minimum of 4 pair Category 5 Enhanced (CAT 5e) cable terminating at each outlet (jack) one for voice and one for data. The Contracting Officer shall determine outlet locations for individual rooms. Telephone wiring shall be recessed in finished areas and surface mounted in metal conduits in unfinished areas. Two (2) 4 inch empty conduits shall be provided from the telecommunication room/closet to the outside communication manhole or handhole. See paragraphs 10 thru 10.3.2 below for additional

requirements for communications systems.

9.6 TELEVISION SYSTEM

Television System shall consist of television outlets and an empty metal conduit raceway system, to include necessary junction boxes and pull wire. The Contracting Officer shall determine outlet locations. Television monitors, coaxial cable any amplification devices shall be provided by others. One 2-inch (50mm) conduit shall be provided from the television junction box to the outside communication hand-hole.

9.7 IDENTIFICATION NAMEPLATES

Major items of electrical equipment, such as the transformers, manholes, hand holes, panel boards and load centers, shall be provided with a permanently installed engraved identification nameplate.

9.8 SCHEDULES

All panel boards and load centers shall be provided with a panel schedule. Schedule shall be typed written in English and Afghan languages.

9.9 SINGLE LINE DIAGRAM

Complete single line diagram shall be provided in every transformer distribution panel and in Main Distribution Panel in each building. Single line diagram shall show all panels serviced from the transformer distribution panel and the MDP respectively.

9.10 MEDICAL CLINIC

All electrical work in the medical clinic shall comply with the health-care-facility specific requirements outlined in UFC 4-510-01 and NFPA 99, in addition to the general requirements of the NEC and other general electrical codes and standards listed above.

The medical clinic shall be provided with an overhead paging system (Public Address System), as outlined in UFC 4-510-01.

Backup power systems shall be installed per the requirements of UFC 4-510-01, NFPA 99, and NEC. Power systems for the medical clinic shall be designed as a double-ended substation with two or more transformers, fed from two different feeders. Hospital power system shall be a “type 1 EES” system, as defined in NFPA 99, and shall meet the design criteria defined in UFC 4-510-01, chapter 10.

UPS systems for the medical clinic shall be provided as required in UFC 4-510-01.

The terms “double ended” and “double ended substation” are defined in IEEE 602.

Provide power for X-ray equipment in accordance with UFC 4-510-01.

In case of conflict between transformer design criteria between the above named standards, UFC 4-510-01 shall govern; in cases where UFC 4-510-01 can not resolve the conflict, it shall be brought to the attention of the Contracting Officer for resolution.

10 Installation Communication Systems

This facility will serve as the installation’s center for telecommunications, switching, and automation networking (including internet service).

10.1 Communication Building

A communication building shall be constructed centrally on base with a communications Equipment Room, support offices, and a storage area.

10.1.2 Equipment Room (AKA: Telephone Switch Room, Communications Room, and Computer Room)

An equipment room is a special-purpose room that provides space and maintains a suitable operating environment for large communications and/or computer equipment. Equipment Rooms (ER) differ than Telecommunications Rooms (TR) in that ERs are generally considered to serve a campus/base, whereas the TRs serve a floor area of a building.

The equipment room should be located as indicated on the plan to support the communications cable backbone/distribution system and Main Distribution Frame (MDF).

All voice telephone, data and emergency wiring, including any planned or future fiber optical runs, will originate and/or terminate in the equipment room.

Typical voice active equipments are Private Branch Exchange (PBX/telephone switch), attendant/maintenance consoles, call accounting systems, and voice mail systems.

Typical data active equipments are centralized processing systems, such as mainframe/minicomputers using wide area network (WANs) and Local Area Network (LANs).

Other active equipment includes satellite and microwave equipment.

The floor and aerial space must be large enough to support the telephone switch, data network equipment, HF/RF radio systems, microwave systems, VSAT equipment, and operations / maintenance personnel. The size should be consistent with the Regional Corps Communications Buildings.

Do not locate the equipment room in a location that is subject to water infiltration, steam infiltration, humidity from nearby water/steam, heat, and any other corrosive atmospheric or adverse environmental conditions. Do not share the equipment room with the mechanical room, washroom, janitor's closet, storage room, or loading docks.

Locate the equipment room far enough away from sources of Electrical Magnetic Interference (EMI) to reduce interference with the telecommunications cabling. EMI sources are power supply transformers, motors, generators, x-ray equipment, radio transmitters, radar transmitters, and induction heating devices (photocopying equipment).

In addition to the telecommunications equipment and cabling, the equipment room must include space for any environmental control equipment, power distribution/conditioners, and uninterruptible power supply (UPS) systems that will be installed. Provide space outside of the building to support the VSAT pad/dish, HF/RF antennas, and microwave tower.

The Uninterruptible Power Supply (UPS) should be indoor and environment friendly and should be inside the Equipment Room. It should have a year-round Heating, Ventilating, and Air-Conditioning (HVAC) climate control for the sensitive electronic equipment.

Provide four (4) spare 100 mm PVC conduits with 600 mm radius from floor adjacent to open wall area to 1500 mm outside of building wall (cap ends for future cables). Arrange equipment in room to allow equipment removal and maintenance. Electrical service to the building shall be underground.

The equipment room must be locked with controlled access.

10.1.3 Power

The main power source will come from the Prime Power Plant. The Communication Building will be provided with the Prime Power Plant and will be supported by standby power generator, Uninterruptible Power Supply with Voltage Stabilizer System to secure graded and reliable power source for all types of communication and computer equipment.

The main communication building will be provided with Electrical Distribution Panel along with branch circuits for the connectivity of UPS, Voltage Stabilizer, Air Conditioner, and other related electrical machineries.

10.1.3.1 Stand-by Generator

The generator will be on stand-by to provide power in case of power outage from the Prime Power Plant. The minimum rating is 80 KVA generator, 380V, 3-phase, 50Hz, with automatic transfer switch (ATS) and 4000 liters fuel tank. Generator shall be sized for the expected demand load, plus 25% spare capacity, however, 80kVA is the minimum size generator; if a larger generator is needed, a larger generator shall be provided.

Provide a 3m x 5m concrete pad outside the Communications Building for the backup generator with an adjacent 2m x 3m concrete pad with a spill dike for the fuel tank.

A 15cm diameter or larger conduit shall connect the generator pad to the Communication Building (ATS, Main Electrical distribution panel board) and shall use long sweep elbows totaling no more than 180 degrees for any bends.

10.1.3.2 Uninterruptible Power Supply

The UPS will have a **minimum** rating capacity of 30KVA, 380V, 3-phase, 50Hz, but shall be sized for the load, if it is known. UPS shall be equipped with valve regulated lead acid autonomy of 4 hours battery backup at rated loads with neutral and earth. UPS shall be double-conversion type (also called a “static UPS”, consisting of a rectifier, battery at float voltage, and an inverter).

UPS system shall be hardwired to the building’s electrical distribution system; but only to circuits for communications and computer equipment. Lighting, HVAC, and other non-computer and non-communications loads shall not be on the UPS circuits.

Parallel to the UPS system shall be a Regulating Transformer (aka Servo Motor Voltage Stabilizer) with a manual transfer switch. Regulating Transformer shall be of same rating as the UPS. A Manual Transfer Switch (MTS) shall be provided to bypass the UPS and instead use the Regulating Transformer.

A Manual Transfer Switch shall be provided to by-pass the UPS and Voltage Stabilizer in the event of a major problem with both units. See diagram. (Static Switch & Manual Transfer Switch are used interchangeably). Automatic Transfer Switch between base power and Communications Building Stand-by Generator are connected to the power source end of the diagram below.

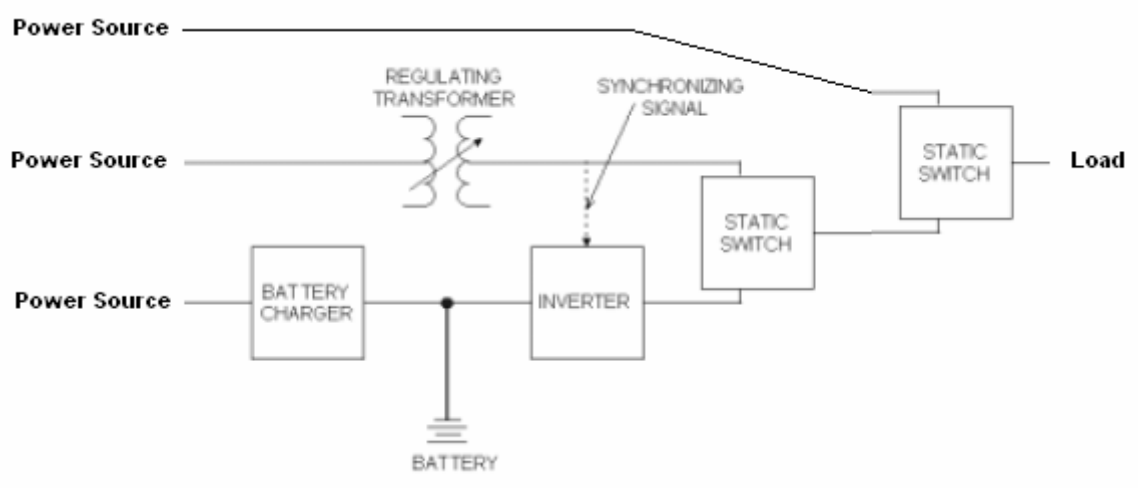

10.1.3.3

Not used

10.1.3.4 Grounding System

A grounding grid tested to 5 ohms or less shall be distributed throughout the UPS and Equipment Room. A ground ring shall be installed around the communications building.

10.1.4 HVAC

The main communication building will be provided with sufficient Heating, Ventilation, and Air Conditioning System capable to provide cooling temperature of 20 – 25 degree centigrade.

The HVAC system is designed for the thermal management of computer, network server and telecommunication rooms. They typically incorporate good filtration performance. The units will be provided with a minimum rating for outdoor shelters or enclosures

10.1.5 Raised Floor

The Equipment Room should have raised flooring. It should use industry-standard interchangeable 600m x 600m all-steel High Pressure Laminate (HPL) raised panels, with 450mm clear space below finish floor.

Assembly shall be designed for the highest earthquake zone. Design shall be bolted stringer capable of withstanding a 55,600N (12,500 lb) uniform load and a 2.200 N (500 lb) rolling load. Provide Four (4) panel lifting devices. Provide bonded anti-static raised floor assembly and flooring.

10.2 Outside Plant Infrastructure

10.2.1 Conduit System

Provide underground conduit system, 4-6 inch schedule 40 no load & 80 load or 6 inch ASTM equivalent from the communications room to each building (with 25% growth expansion)

10.2.2 Maintenance and Hand Holes

The Contractor shall provide reinforced concrete maintenance-holes with communications and

number marked on the steel cover.

Manhole/Hand Hole systems shall have no more than 100 meters between access points.

10.2.3 Outside Plant (OSP) Cables

Brigade, Battalion, separate Company and equivalent HQ buildings to include hospital/clinic, military police/security forces, and base operations shall have 50-100 pair 24 AWG copper UTP cable each run from the building's Telecommunication Room directly back to the Communications Building Equipment Room. In parallel with each copper telephone cable shall be run a six-strand Single Mode (SM) fiber optic OSP cable in support of data communications.

Terminate copper cables on the Main Distribution Frame (MDF) located in the Communications Building Equipment Room with gas type protector blocks and in the Telecommunications Room on 110 punch down blocks.

Terminate SM fiber optic cables in the Communications Building Equipment Room and in the Telecommunications Room on SC type connectors. SM fibers shall have less than 0.5dB loss per connector and 0.1dB loss per kilometer. Contractor shall provide a report from TRD test measurements showing loss characteristics for each fiber. End caps (dust caps) shall be provided over all SC connectors.

Provide a 25-pair 24 AWG copper UTP cable from the Communications Building Equipment Room around the base perimeter to connect all guard towers and security posts with redundant paths so that communications are maintained even if a cable is cut.

Inter-building telephone and data cabling shall be of high grade such as: Essex Group Copper UTP Underground Conduit/Direct Burial Cable xx-pair, 24AWG Gel filled (PE89 gel/foam filled) for Outside Plant, Corning Underground Duct 6 Fiber SM OSP Dielectric Cable, and Corning Outdoor/Direct Burial 6 Fiber SM OSP Armored Cable.

10.3 Inside Plant Infrastructure

10.3.1 Inside Plant (ISP) Cables

Terminate distant end of the copper cables on 110 blocks in each user building Telecommunications Room.

Terminate distant end of the fiber optic cables on SC type connectors in each user building Telecommunications Room.

Install CAT5e UTP or better and RJ-45 blocks (1 voice and 1 data) per 100 square feet in each user building utilizing US standards (EIA/TIA 569)

10.3.2 Telecommunications Room (TR): (AKA: Telephone Closet)

The telecommunications room is a space or area in a user’s building that is designed to provide secure, suitable environment for the installation of cable, telecommunications equipment, and termination and cross-connect facilities. The telecommunications room is the point where the base backbone cabling interfaces to the buildings horizontal cabling (copper and fiber optic cables).

The telecommunications room is a floor serving distribution facility for horizontal cabling. A telecommunications room is required for each floor if the building has multiple floors and each should be vertically aligned over each other connected with a minimum of two 4” riser conduits.

The telecommunications room must be dedicated to the telecommunications function and related support facilities. Equipment not related to the support of telecommunications such as piping, duct work, and distribution of building power must not be located in, or pass through the telecommunications room.

The telecommunications room must be equipped with adequate electrical power which is normally 20A protected branch circuits for equipment, non-switched 3-wire alternating current duplex outlets for equipment, and separate continence outlets for test equipment/tools. All outlets must be non-switched (outlet power must not be controlled by a wall switch which may lead to inadvertent loss of service).

The telecommunications room must be locked with controlled access.

11. SPARE PARTS AND CONSUMABLES

The Contractor shall provide for all systems, based upon the spare parts list described in 1.29.2.2.j. of Section 01060, a supply of spare parts, equipment and consumables necessary to maintain operations throughout the performance period and conduct preventive maintenance and repair for a 6 month period beyond the contract performance period, to include those items required to perform testing and commissioning.

12. ATTACHMENTS

The following attachments form an integral part of the technical requirements:

Appendix A – ANA Brigade List of Facilities

A-0 Site Plan Example
A-2 Barracks A Plan
A-3 Barracks A Elevation
A-4 Barracks A End Elevation
A-5 Barracks B Plan
A-6 Barracks B Section
A-7 Toilet Building C Plan
A-8 Toilet Building C Elevation
A-9 Toilet Building C Section
A-10 ETTC Barracks Floor Plan
A-11 ETTC Exterior Elevation
A-12 Central Toilet Building
A-24 Typical Helipad
A-27 Communications Building
A-31 Soccer Field, Bleachers, and Running Track
A-34 Laundry Room Plan Example
C-1 Stone Wall Detail
C-2 Chain Link Details
C-3 Chain Link Details
C-4 Anti-Vehicle Ditch
C-5 Elevated Guard Tower
C-6 Bunker
USACE Lodging (Special Facilities)
CJ-1 Heat Cool Unit Schematic

Appendix B – Topographic Map

Appendix C- Designs for the following projects:

Guard Tower	Guard House	Reception Center
DFAC 1 (ANA)	Power Plant	Brigade Headquarters
Garrison Headquarters	Arms Storage	POL Storage
Maintenance Garage, 9 Bay	Maintenance Garage 3 Bay	Refueling Point
Battalion Headquarters	Central Warehouse	Training Building
Ammo Supply Point Igloo	Community Center	Medical Clinic
Perimeter Fence	Standard Details	
Index of Following Drawings	DPW Shop Building	MWR Facility (ETTC)
MWR Facility	DFAC 2 (ETTC)	DFAC 3 (Interpreters)
Detention Facility	Ammunition Storage	Fire station

The designs included in Appendix C were designed specifically for Khair Kot, Paktika Province, Afghanistan, yet these designs are standard for the ANA garrisons.

-- End of Section --

SECTION 01321

PROJECT SCHEDULE

PART 1 GENERAL

1.1 SUBMITTALS

The following shall be submitted for Government approval in accordance with Section 01335 SUBMITTAL PROCEDURES: SD-07 Schedules Project Schedule; Horizontal Bar Chart and Periodic Payment Request Updates; and Projected Earnings Curve and Periodic Payment Request Updates. Revisions to the Project Schedule and Projected Earnings Curve for Modifications Issued to this Contract shall be coordinated with the Contracting Officer.

PART 2 PRODUCTS (Not Applicable)

PART 3 EXECUTION

3.1 GENERAL

The Contractor shall furnish a Project Schedule as described below. The scheduling of construction shall be the responsibility of the Contractor. Contractor management personnel shall actively participate in its development. Subcontractors and suppliers working on the project should also contribute in developing and maintaining an accurate Project Schedule. The approved Project Schedule shall be used to measure the progress of the work, to aid in evaluating time extensions, and to provide the basis of all progress payments.

3.2 BASIS FOR PAYMENT

The schedule shall be the basis for measuring Contractor progress. Lack of an approved schedule or scheduling personnel shall result in an inability of the Contracting Officer to evaluate Contractor progress for the purposes of payment. Failure of the Contractor to provide all information, as specified below, shall result in the disapproval of the entire Project Schedule submission and the inability of the Contracting Officer to evaluate Contractor progress for payment purposes. In the case where Project Schedule revisions have been directed by the Contracting Officer and those revisions have not been included in the Project Schedule, then the Contracting Officer may hold retainage up to the maximum allowed by contract, each payment period, until revisions to the Project Schedule have been made.

3.3 PROJECT SCHEDULE

3.3.1 Schedule of Construction

Within seven (7) calendar days after notice to proceed, the Contractor shall prepare and submit a Construction Schedule to the Contracting Officer for approval. This schedule shall address each payment line item and/or sub-line item listed in the Proposal Schedule separately.

3.3.2 Non-Compliance

Failure of the Contractor to comply with the requirements of the Contracting Officer shall be grounds for determination by the Contracting Officer that the Contractor is not prosecuting the work with sufficient diligence to ensure completion within the time specified in the contract. Upon making this determination, the Contracting Officer may terminate the Contractor's right to proceed with the work, or any separable part of it, in accordance with the default terms of this contract.

3.3.3 Network Analysis System

a. Schedule Requirements. The design network analysis schedule shall be updated at least monthly or submitted as part of the design submittals, whichever occurs first. When the construction network analysis schedule is submitted and accepted by the Contracting Officer, it will then be considered the “Baseline Network Analysis Schedule”. The Baseline Network Analysis Schedule will then be used by the contractor for planning, organizing, and directing the work; reporting progress; and requesting payment for work accomplished. The contractor shall update the schedule monthly and shall be submitted with the payment requests to reflect the status of the work. Submittal and acceptance of the Baseline Network Analysis Schedule for Design and Baseline Network Analysis Schedule and accurate updated schedules accompanying the pay requests are both conditions precedent to processing pay requests. Only bonds will be paid prior to acceptance of the Baseline Schedule.
b. Software: The scheduling software to be used on this project shall be compatible to Primavera Project Planner (P3) by Primavera Systems, Inc. The contractor shall provide electronic files in a format that is compatible with the Contracting Officer’s current software version. The contractor shall provide to the Government one licensed copy of the same version of the software that the contractor is using to prepare schedules for this project. Software that is not compatible to Primavera Project Planner (P3) by Primavera Systems, Inc. will not be accepted for use on this project.
c. The contractor shall designate a part time Scheduler that will be responsible for the development, preparation, and maintenance of an accurate, computerized Network Analysis Schedule. Part-time is defined as the Scheduler performing on-site coordination, attending project meetings, and updates in addition to other duties in a typical work week. The Scheduler shall have previous experience in developing, creating, and updating at least two computer schedules of similar size and complexity to this project. A resume for the Scheduler shall be submitted to the Contracting Officer for acceptance. If, at a later date, the Contracting officer considers the contractor’s Scheduler to be less competent than necessary or objects to the quality of the schedule presented, the contractor shall propose a new Scheduler.
d. Format: The network system shall consist of time scaled logic diagrams and specified reports. The logic diagrams shall show the order and interdependence of activities and the sequence in which the work is to be accomplished as planned. Diagrams shall be work phase/work area and sorted by early start date and will show a continuous flow from left to right with no logic (relationship lines) from right to left. With the exception of the contract award, project start, and project completion milestone activities, no activities will be open-ended; each activity will have a predecessor and successor ties. The diagram shall clearly show the activities of the critical path. Once an activity exists on the schedule, it may not be deleted and must remain in the logic. No more than 20 percent of the activities may be critical or near critical. Critical will be defined as having zero days of Total Float. “Near Critical” will be defined as having Total Float in the range of 1 to 14 days. Show the following information on the diagrams for each activity:
    i. Activity ID
    ii. Activity Description
    iii. Original Duration in Work Days
    iv. Remaining Duration
    v. Actual Duration in Work Days
    vi. Early Start Date
    vii. Early Finish Date
    viii. Total Float

The minimal number of construction activities in the final network diagram shall be 500. Skip numbering shall be used on the network to allow insertion of additional activities for contract modifications and logic changes.

3.3.4 Cost

Listed with each work item shall be a corresponding cost representing the total cost, such as material, labor, equipment, and overhead associated with that item. The total cost of the work items shall be equal to the Bid Price for that sub-line item of the Proposal Schedule.

3.3.5 Scheduled Project Completion

The schedule interval shall extend from Notice-To-Proceed to the contract completion date.

3.3.6 Projected Earning Curve

Submitted with the Construction Schedule shall be a Projected Earning Curve. The Projected Earning Curve is a plot of the Contractor's earnings on the vertical axis and the contract duration on the horizontal axis. The earnings figure shall relate to the complete value of the contract and need not reflect each facility separately.

3.3.7 Construction Schedule

The Construction Schedule shall be on one page with a maximum dimension of 90 cm by 120 cm. The Contractor shall submit the Projected Earnings Curve on the same page. The initial submittal shall include one (1) reproducible and four (4) copies, one (1) copy of which will be returned to the Contractor when approved.

3.3.8 Submission With Partial Payment Estimate

Each time the Contractor submits a payment request under this contract he shall also submit three (3) copies of the Bar Chart. The Bar Chart shall be annotated by indicating the percent complete for each activity directly on the bar. The Projected Earnings Curve shall be annotated by plotting actual earnings versus time on the same graph. Those work items reflecting performance which is behind schedule by fifteen (15) calendar days or more shall be fully explained in detail giving the reason for delay and the Contractor's plan for timely completion within the schedule.

3.3.9 Modifications

The Construction Schedule and Projected Earning Curve shall be revised to reflect any and all modifications issued to this contract as they are issued. Format and numbers of copies as defined in paragraph CONSTRUCTION SCHEDULE shall be submitted for approval by the Contracting Officer.

3.4 PERIODIC PROGRESS MEETINGS

Progress meetings to discuss payment shall include a monthly on-site meeting or shall be conducted at other regular intervals mutually agreed to at the preconstruction conference. During this meeting the Contractor shall describe, on an activity-by-activity basis, all proposed revisions and adjustments to the project schedule required to reflect the current status of the project. The Contracting Officer will approve activity progress, proposed revisions, and adjustments as appropriate.

3.4.1 Update Submission Following Progress Meeting

A complete update of the project schedule containing all approved progress, revisions, and adjustments, based on the regular progress meeting, shall be submitted not later than four (4) working days after the monthly progress meeting.

3.4.2 Progress Meeting Contents

Update information, including Actual Start Dates, Actual Finish Dates, Remaining Durations, and Cost to Date, shall be subject to the approval of the Contracting Officer.

3.4.3 Earnings Report

A compilation of the Contractor's Total Earnings on the project from the Notice-to-Proceed until the most recent Monthly Progress Meeting shall be recorded. This report shall reflect the Earnings of specific activities based on the agreements made in the field and approved between the Contractor and the Contracting Officer at the most recent Monthly Progress Meeting. Provided that the Contractor has provided a complete schedule update, this report shall serve as the basis of determining Contractor Payment. This report shall: sum all activities and provide a percent complete by individual activity and total project percent complete. The report shall contain, for each activity: activity identification, activity description, original budgeted amount, total quantity, quantity to date, percent complete (based on cost), and earnings to date.

3.4.4 Cost Completion

The earnings for each activity started shall be reviewed. Payment shall be based on earnings for each in-progress or completed activity. Payment for individual activities shall not be made for work that contains quality defects. A portion of the overall project amount may be retained based on delays of activities.

-- End of Section --

W917PM-07-R-0086, 0088, 0089

Amendment

Questions and Answers:

Question 1.
Please provide a reference point for the 1150m X1150m site within the coordinates provided in the RFP for Kunduz.

Answer:
Currently the Corps of Engineers does not have a defined 1150x1150 site perimeter map for Kunduz Garrison. This information will be provided to the contractor when available.

Question 2.
Please provide any information you may have regarding availability of underground water at these sites. This information will have great cost impact.

Answer:
We currently do not have any information regarding underground water, and will not have any information prior to receipt of proposals. The Corps of Engineers will conduct a geophysical water study, and will provide the report with the recommended location for the water well to the award winning contractor.

Question 3.
Past experience with AED clearly show that in order to prepare and obtain 35% design documents approval from AED, for a similar sized project, it takes 90 to 120 days.

Answer:
For the concept submittal, the requirements are a site survey, site master plan, and force protection plan.
Per Section 00150: Part 1 will be the basic services required to develop the first submittal which represents: survey, site master plan and force protection perimeter. The review of the survey, master plan and force protection plan will be accomplished as a charrette. After the approval of the site plan and force protection drawings, the Government may issue a Clearance for Construction letter to commence with the site clearing and force protection perimeter. Part 1 to be submitted within 30 calendar days following NTP.

Question 4.
A line on the site plan you have provided should clearly enclose the Base Bid area.

Answer:
The Appendix A Brigade Layout is an example plan for bidding purposes and to identify the limits of the construction and demining. The contractor is required to develop his site specific master plan for submission within 30 calendar days following notice to proceed. See Section 01010, Table 1.1 for the identification of the base bid items.

Question 5.
There are no CLIN Items for the Helipad, Sports Field, Solid Waste, Anti Vehicle Trench, Concrete Bunkers, Central Receiving Warehouse, DFAC 2, DFAC 3.

Answer to Missing CLINS:

- CLIN for Helipad, to be added by amendment (revised proposal schedule is enclosed)
- CLIN for Sports Field, to be added by amendment
- Solid Waste, (identified for each battalion in Section 01010),
- Anti Vehicle Trench, 0002A, Reference Specification Section 01010, paragraph 2.7 and Section 01015, Paragraph 2.5 (included as part of the “Force Protection”. The revised proposal schedule includes the term "Force Protection" instead of Perimeter Wall),
- CLIN for Concrete Bunkers, to be added via amendment,
- CLIN for Central Receiving Warehouse, to be added by amendment,
- DFAC 2, See CLIN 0003B (Spec 01010 2.11),
- DFAC 3. See CLIN 0003B (Spec 01010 2.11)

Question 6.
Please clarify the requirements for the Laundry Room; 2.11.1 requires Washer/Dryer for 250 person @ 1/10 ratio, however 2.34 require 10 Washers and 10 Dryers. Which is correct?

Answer:
Laundry Room: Section 01010 paragraph 2.11.1 refers to the ETTC compound. The Specifications paragraph 2.11.1 is corrected to read “the contractor shall construct the ETTC laundry facility to include utilities to support the installation of ten commercial washer, 30 pounds minimum capacity and ten commercial dryers. Section 01010 paragraph 2.34 refers to the ANA compound.

Question 7.
An access road is not defined in the solicitation.

Answer:
Section 01010 is revised to include an access road for the basic contract area of work.

Question 8.

The Request for proposal package includes many designs. Can the contractor submit a proposal to construct a K Span structure instead of one of the one of the furnished designs?

Answer:
No, K Spans structures shall only be constructed where called out in the current request for proposal.

Question 9.
Section 01015, paragraph 6.4.1, Outside Design Conditions, refers to the altitude as 1490 meters, and an outside temperature of 33.3 degree C in the summer. However, paragraph 9.3.3 Design Conditions call for an altitude to be 2000 meters and the temperature to be49degrees C. Please clarify which is correct.

Answer:

The site altitude and outside summer DB temperatures are as follows:

Farah
[Latitude – (approx.) 34.22 deg. North
Longitude – (approx.) 62.22 deg. East
[Elevation – (approx.) 964 M (3163 ft.)]
Summer – 39 deg C (102 deg F)
Dry Bulb (DB) [& 23.9 deg C (75 deg F) Wet Bulb (WB)]
Winter – (-3.9 deg C/25 deg F)
Daily Range – 17 F

Kunduz
[Latitude – (approx.) 36 deg. North
Longitude – (approx.) 68 deg. East
Elevation – (approx.) 432 M (1417 ft.)
Summer – 38.8 deg C (102 deg F) Dry Bulb (DB) [& 6.1 deg C (43 deg F)]
Wet Bulb (WB)]
Winter – (-1.6 deg C/29 deg F)
Daily Range – data unknown]

Paktika area :
[Latitude – (approx.) 33 deg. North
Longitude – (approx.) 68 deg. East
Elevation – (approx.) 2210 M (7250 ft.)
Summer – 30.5 deg C (87 deg F) Dry Bulb (DB) [& 8.3 deg C (47 deg F)]
Wet Bulb (WB)]
Winter – (-11.1 deg C/12 deg F)
Daily Range – data unknown]

Please use 49 C and 2000 meters in selection of electrical equipment and generators for all three sites.

Question 10.

"Para 2.5 of section 01010 calls for the number of generators to be (N+2) which would give the indication that the government requires 2 spare generators in addition to the number of generators necessary to power the base. However the para goes on to describe the (+2) as a spare generator, i.e. only one spare not 2.

Please clarify whether the intent is to supply one or two spare generators for this project."

Answer:

The number of spare generators is +2, meaning two (2) spare generators. Section 1010 revised to "…Where 'N' would represent number of units required to meet initial demand loads plus 25% spare capacity and '+2' would represent spare generators available at all times."

Question 11.

Section 01015, Paragraph 9.3.3 calls for all equipment to be designed for 49 degrees Celsius. Please confirm that this design temperature is for equipment installed outdoors only. Supplying indoor equipment with this temperature rating will increase the physical size of the equipment and extend their fabrication lead times significantly. Primarily, the generators with this temperature rating will have an over sized radiator and their lead time jumps from 22-24 weeks to 32 weeks for fabrication.

Answer:

Para 9.3.3 is intended for electrical equipment and generator units. 49 C and 2000 meters are the maximum conditions. Generators shall be selected based on these conditions. It does not matter if the generator is installed indoor or outdoors since the outside air intake for the generator affects the generator performance.

AMENDMENT

Changes to specifications:

1. Road: Reference Section 01010, paragraph "2.2 SITE GRADING, ROAD NETWORK, AND STORM WATER RUNOFF:"

   ADD THE FOLLOWING SUB-PARAGRAPH:
   The contractor shall construct a permanent road from the main road to the base entry and within the base. The road shall be constructed within the contractor's proposed alignment of the roads for the master plan. The Roads shall meet the grading and road construction requirements identified in Section 01015, including compacted crushed aggregate base course. The Road is part of the base bid and shall be constructed for an estimated four (4) kilometers. Paving for the 4 kilometer road shall be included as part of the Optional CLIN for Road Network.

2. STRUCTURAL SPECIFICATIONS, REFERENCE SECTION 01015 TECHNICAL REQUIREMENTS, PARAGRAPH 4. STRUCTURAL. Replace paragraphs 4.12, 4.13, 4.14, and 4.15 with the following paragraphs:

   “4.12 DESIGN

   Design shall be performed and design documents signed by a registered professional architect and/or engineer. Calculations shall be in SI or Metric units of measurements. All components of the building shall be designed and constructed to support safely all loads without exceeding the allowable stress for the materials of construction in the structural members and connections.

   4.13 DEAD AND LIVE LOADS

   Dead loads consist of the weight of all materials of construction incorporated in the buildings. Live loads used for design shall be in accordance with the Structural load Data, Unified facilities Criteria (UFC), UFC 3-310-01.

   4.14 WIND LOADS

   Wind loads shall be calculated using a "3-second gust" wind speed of 135 km/hr.

   4.15 SEISMIC

   The building and all parts thereof shall be designed for the seismic requirements as defined by Structural Load Data, UFC 3-310-01. Spectral ordinates shall be Ss = 1.28g and S1 = 0.51g. “

3. Section 01010, Paragraph 2.11.1. Delete the sentence” Provide Laundry Room with industrial grade washers and dryers for 250 persons @ 1/10.” And replace with the following sentence: “The contractor shall construct the ETTC laundry facility to include utilities to support the installation of ten commercial washers, minimum 30 pounds capacity and ten commercial dryers”.

4. Section 01015, Paragraph 12. Attachments:

   a. Reference file identified as “Specifications 26 June 07”. Section 01015 has been deleted from this file.

b. Reference Appendices A, B & C, Drawing Package. Drawing Package omitted in the solicitation and is added by this amendment. All drawings title blocks designs referenced Paktika Province, Afghanistan, yet these drawings are standard for all ANA Garrisons.

5. Specification Section 01321 Schedule, Replace Paragraph 3.3.3 Horizontal Bar Chart with the following:

3.3.3 Network Analysis Systems

a. Schedule Requirements. The design network analysis schedule shall be updated at least monthly or submitted as part of the design submittals, whichever occurs first. When the construction network analysis schedule is submitted and accepted by the Contracting Officer, it will then be considered the "Baseline Network Analysis Schedule". The Baseline Network Analysis Schedule will then be used by the contractor for planning, organizing, and directing the work; reporting progress; and requesting payment for work accomplished. The contractor shall update the schedule monthly and shall be submitted with the payment requests to reflect the status of the work. Submittal and acceptance of the Baseline Network Analysis Schedule for Design and Baseline Network Analysis Schedule and accurate updated schedules accompanying the pay requests are both conditions precedent to processing pay requests. Only bonds will be paid prior to acceptance of the Baseline Schedule.
b. Software: The scheduling software to be used on this project shall be compatible to Primavera Project Planner (P3) by Primavera Systems, Inc. The contractor shall provide electronic files in a format that is compatible with the Contracting Officer's current software version. The contractor shall provide to the Government one licensed copy of the same version of the software that the contractor is using to prepare schedules for this project. Software that is not compatible to Primavera Project Planner (P3) by Primavera Systems, Inc. will not be accepted for use on this project.
c. The contractor shall designate a part time Scheduler that will be responsible for the development, preparation, and maintenance of an accurate, computerized Network Analysis Schedule. Part-time is defined as the Scheduler performing on-site coordination, attending project meetings, and updates in addition to other duties in a typical work week. The Scheduler shall have previous experience in developing, creating, and updating at least two computer schedules of similar size and complexity to this project. A resume for the Scheduler shall be submitted to the Contracting Officer for

acceptance. If, at a later date, the Contracting officer considers the contractor's Scheduler to be less competent than necessary or objects to the quality of the schedule presented, the contractor shall propose a new Scheduler.

d. Format: The network system shall consist of time scaled logic diagrams and specified reports. The logic diagrams shall show the order and interdependence of activities and the sequence in which the work is to be accomplished as planned. Diagrams shall be work phase/work area and sorted by early start date and will show a continuous flow from left to right with no logic (relationship lines) from right to left. With the exception of the contract award, project start, and project completion milestone activities, no activities will be open-ended; each activity will have a predecessor and successor ties. The diagram shall clearly show the activities of the critical path. Once an activity exists on the schedule, it may not be deleted and must remain in the logic. No more than 20 percent of the activities may be critical or near critical. Critical will be defined as having zero days of Total Float. "Near Critical" will be defined as having Total Float in the range of 1 to 14 days. Show the following information on the diagrams for each activity:
    i. Activity ID
    ii. Activity Description
    iii. Original Duration in Work Days
    iv. Remaining Duration
    v. Actual Duration in Work Days
    vi. Early Start Date
    vii. Early Finish Date
    viii. Total Float

    The minimal number of construction activities in the final network diagram shall be 500. Skip numbering shall be used on the network to allow insertion of additional activities for contract modifications and logic changes.